LAST REVISED: 01/2021

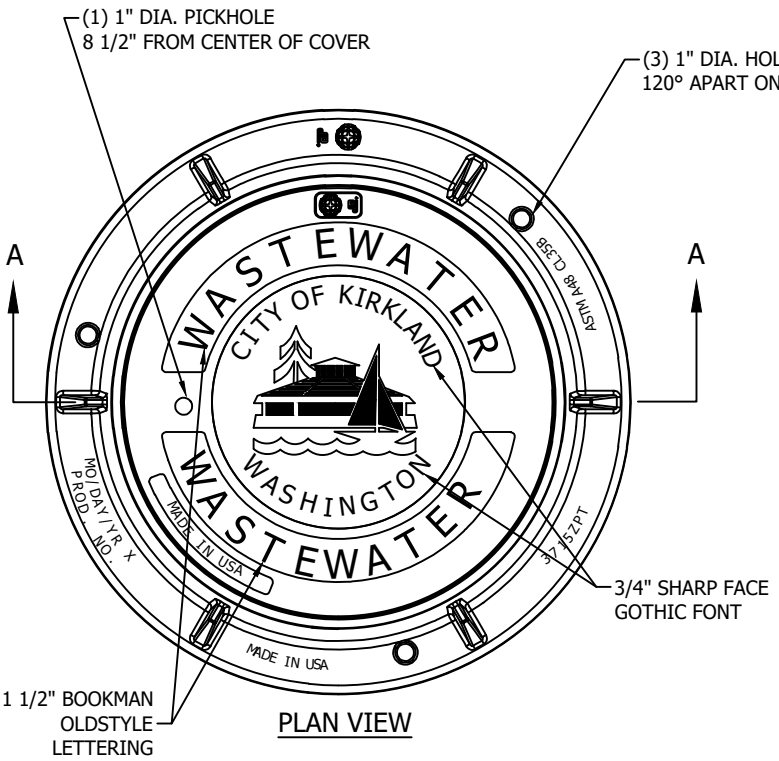

PLAN VIEW

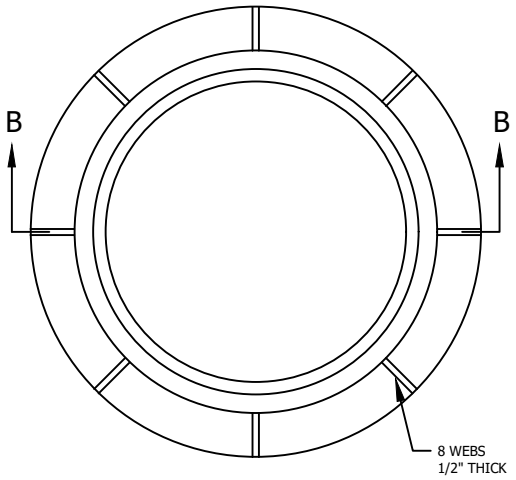

RING PLAN

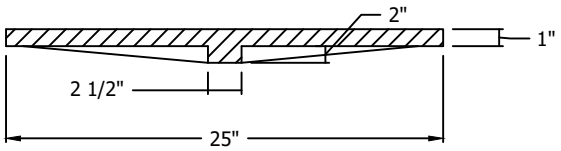

COVER SECTION A-A

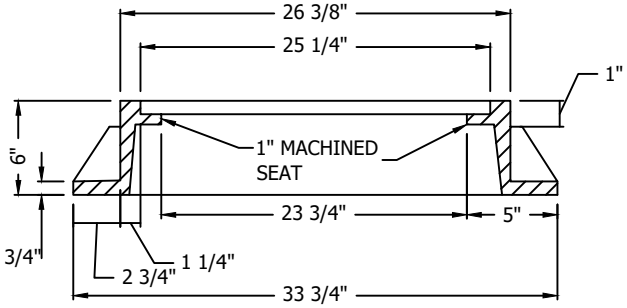

FRAME SECTION B-B

NOTES:

1. VERIFY SLOTTED FRAMES ARE THOROUGHLY FILLED IN WITH MORTAR FOR EFFICIENT INTERACTION WITH IRON AND STRUCTURE.
2. REQUIRED ON ALL ARTERIALS, COLLECTORS OR ANY TIME THAT THE IRON WILL BE WITHIN THE TRAVEL LANE.
3. LID SHALL BE MARKED "WASTEWATER".
4. CITY OF KIRKLAND LOGO REQUIRED.
5. LID MUST BE COVERED WITH TAR PAPER BEFORE OVERLAY.
9. DRILL AND TAP THREE 5/8"-11 NC HOLES THROUGH RING AT 120° AND 23-1/16" DIA. B.C.
10. COVER MATERIAL IS DUCTILE IRON ASTM A 48 CL35B, WITH A MINIMUM WEIGHT OF 141 LBS.
11. FRAME MATERIAL IS DUCTILE IRON ASTM A48 CL35B, WITH A MINIMUM WEIGHT OF 134 LBS.
12. PRODUCT SUPPLIED BY EJ, OR APPROVED EQUAL.
13. FRAME AND COVER SHALL BE H-20 LOADING RATED IF INSTALLED IN ROADWAY.

CITY OF KIRKLAND	
PLAN NO. CK - S.15	
CITY OF KIRKLAND WASHINGTON	24" MANHOLE RING AND COVER