DWG: P:\01 CAD\2022xxxx\D202200038.00 - NUD Grinder Pump Station 4\DWG\C2 Impacts.dwg USER: Sona Greenberg PLOT DATE: 6/3/2022 9:06:33 AM

Northshore Utility District Grinder Pump Station 4

Figure D2

Impacts

ESA

NORTHSHORE UTILITY DISTRICT

King County, Washington

CONTRACT 2022-01

GRINDER PUMP STATIONS 1-4 REPLACEMENT

MARCH 2023

PERMIT SET - NOT FOR CONSTRUCTION

Gray & Osborne, Inc.
CONSULTING ENGINEERS

D. BRUCE GARDINER	President of the Board
SUZANNE GREATHOUSE	Secretary of the Board
MATT BREYSSE	Commissioner
THOMAS D. MORTIMER	Commissioner
TRUDY C. ROLLA	Commissioner
ALAN G. NELSON	General Manager

SHEET INDEX

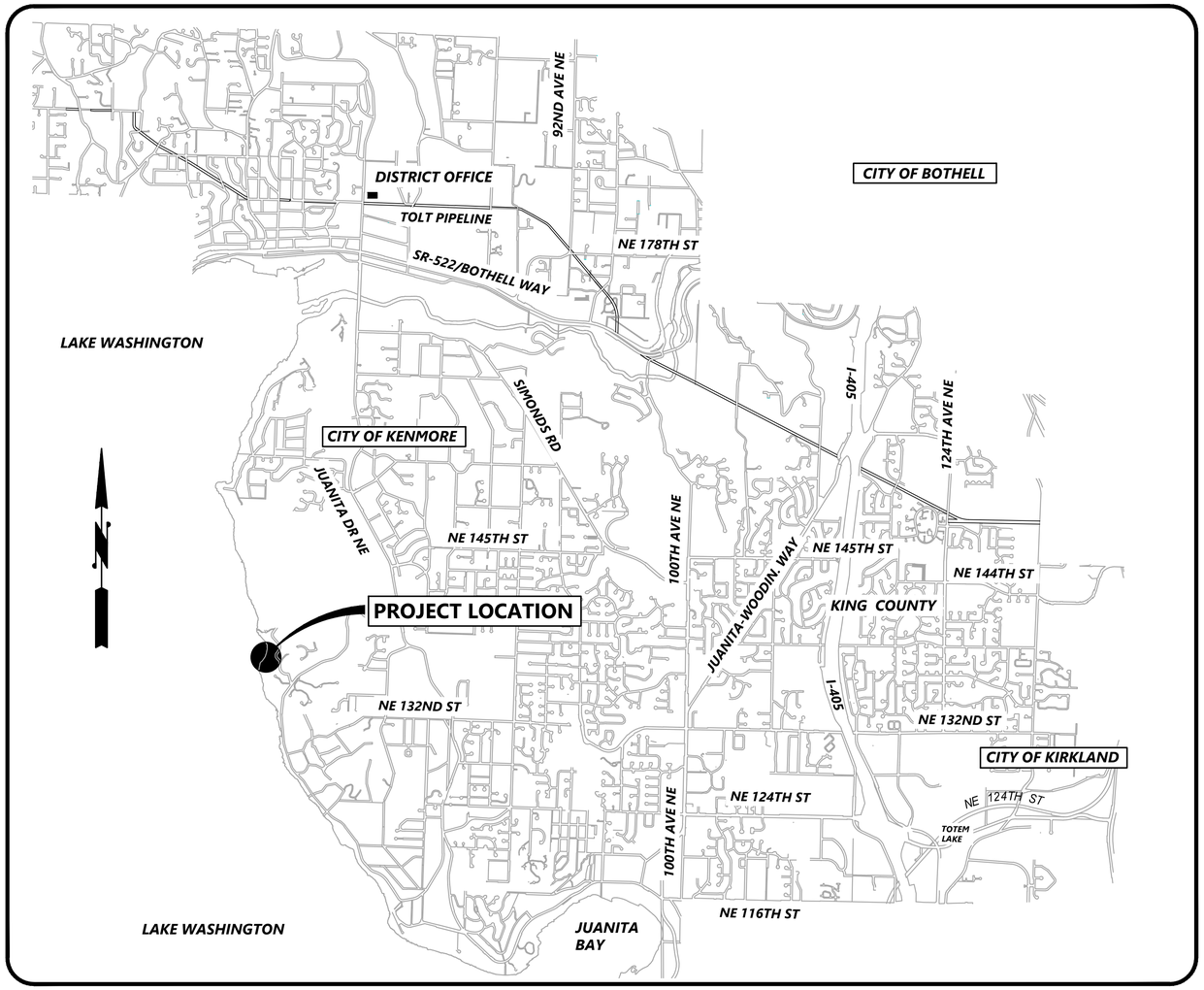

VICINITY MAP

NOT TO SCALE

C2003

SHEET 1 OF 30

ABBREVIATIONS

AC	ASBESTOS CEMENT PIPE
ADJ	ADJUST
ALT	ALTERNATE
ALUM	ALUMINUM
ANSI	AMERICAN NATIONAL STANDARDS INSTITUTE
AP	ANGLE POINT
APPROX	APPROXIMATE
ASPH	ASPHALT
ASSY	ASSEMBLY
ASTM	AMERICAN SOCIETY OF TESTING AND MATERIALS
AVE	AVENUE
BF	BLIND FLANGE
BLDG	BUILDING
BLK	BLOCK
BO	BLOW OFF
BOP	BEGINNING OF PROJECT
BOT	BOTTOM OF
C	CONDUIT
CB	CATCH BASIN
CF	CUBIC FEET
CFS	CUBIC FEET PER SECOND
CI	CAST IRON
CL	CLASS
CLR	CLEARANCE
CMP	CORRUGATED METAL PIPE
CO	CLEANOUT
CONC	CONCRETE
CONN	CONNECTION
CONT	CONTINUED/CONTINUOUS
CPEP	CORRUGATED POLYETHYLENE PIPE
CPLG	COUPLING
CSBC	CRUSHED SURFACING BASE COURSE
CSTC	CRUSHED SURFACING TOP COURSE
CTR	CENTER
CY	CUBIC YARD
℄	CENTER LINE
D	DRAIN
DI	DUCTILE IRON
DIA	DIAMETER
DIM	DIMENSION
DOT	DEPARTMENT OF TRANSPORTATION
DWGS	DRAWING(S)
E	EAST
EA	EACH
EL	ELEVATION
ELEC	ELECTRICAL
EOA	EDGE OF ASPHALT
EOP	END OF PROJECT
EX	EXISTING
FIG	FIGURE
FIN	FINISHED
FL	FLANGE
FT	FEET
GA	GAUGE
GALV	GALVANIZED
GI	GALVANIZED IRON
GV	GATE VALVE
HDPE	HIGH DENSITY POLYETHYLENE PIPE
HGB	HOT DIP GALVANIZED
ID	INSIDE DIAMETER
IE	INVERT ELEVATION
IN	INCH
INV	INVERT
L	LENGTH
LB	POUND
LF	LINEAR FEET
MAX	MAXIMUM
MFR	MANUFACTURER
MH	MANHOLE
MIN	MINIMUM
MISC	MISCELLANEOUS
MJ	MECHANICAL JOINT
N	NORTH
NO	NUMBER
NTS	NOT TO SCALE
OC	ON CENTER
OD	OUTSIDE DIAMETER
OHWM	ORDINARY HIGH WATER MARK
PE	PLAIN END
PERF	PERFORATED
PP	POWER POLE
PV	PLUG VALVE
PVC	POLYVINYL CHLORIDE
PVMT	PAVEMENT
QTY	QUANTITY
R	RADIUS
R/W	RIGHT-OF-WAY
RED	REDUCER
REINF	REINFORCE
REQD	REQUIRED
RESTR	RESTRAINTS
RET	RETAINING
RFCA	RESTRAINED FLANGE COUPLING ADAPTER
S	SOUTH
SCH	SCHEDULE
SF	SQUARE FEET
SHT	SHEET
SIM	SIMILAR
SL	SLOPE
SPECS	SPECIFICATIONS
SQ	SQUARE
SS	STAINLESS STEEL
STA	STATION
STD	STANDARD
TB	THRUST BLOCK
TEL	TELEPHONE
TESC	TEMPORARY EROSION AND SEDIMENT CONTROL
THK	THICK
THRD	THREADED
THRU	THROUGH
TOS	TOP OF SLAB
TYP	TYPICAL
U.N.O.	UNLESS NOTED OTHERWISE
VERT	VERTICAL
W	WEST
W/	WITH
W/O	WITHOUT
WSDOT	WASHINGTON STATE DEPARTMENT OF TRANSPORTATION

PIPING SYMBOLS

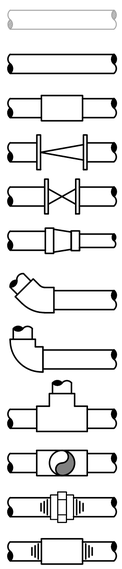

PROCESS PIPING CODES

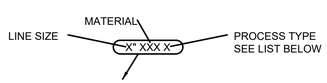

C	CONDUIT
FM	FORCE MAIN
S	SANITARY SEWER

GENERAL MECHANICAL NOTES

1. IN GENERAL, EXISTING STRUCTURES AND FACILITIES ARE NOTED AS "EXISTING" AND ARE SHOWN IN LIGHT LINE WEIGHTS OR AS SCREENED BACKGROUND. NEW CONSTRUCTION, STRUCTURES, FACILITIES, AND FEATURES ARE SHOWN IN DARK LINE WEIGHTS.
2. MANY OF THE SYMBOLS SHOWN ON THIS LEGEND ARE USED ONLY WHERE THEY PROVIDE CLARITY AND ARE NOT NECESSARILY USED IN ALL APPLICATIONS. SOME CONTRACT DRAWINGS MAY HAVE ADDITIONAL LEGENDS APPLICABLE FOR THAT SPECIFIC DRAWING. SYMBOLS SHOWN ON SPECIFIC DRAWINGS GOVERN.
3. THE CONTRACTOR SHALL VERIFY ALL PLANIMETRIC FEATURES AND DIMENSIONS PRIOR TO STARTING WORK AND SHALL NOTIFY THE ENGINEER OF DISCREPANCIES.
4. ALL DIMENSIONS SHOWN ON THE CONTRACT DRAWINGS AND DESCRIBED IN THE SPECIFICATIONS REFER TO THE HORIZONTAL AND VERTICAL PROJECTED PLANES UNLESS OTHERWISE INDICATED.
5. LOCATIONS OF EXISTING UTILITIES ARE BASED ON RECORD DRAWINGS, UTILITY OWNER LOCATES, AND/OR SITE INSPECTION. CONTRACTOR SHALL POTHOLE TO LOCATE BURIED UTILITIES PRIOR TO EXCAVATION.
6. INSTALL FORCE MAIN PIPING LEVEL OR AT POSITIVE SLOPE IN DIRECTION OF FLOW UNLESS NOTED OTHERWISE.

PROPOSED ORDER OF WORK

THE FOLLOWING PROPOSED ORDER OF WORK IS TYPICAL TO EACH OF THE GRINDER PUMP STATIONS. ALL MATERIALS AND EQUIPMENT REQUIRED TO COMPLETE THE CONSTRUCTION OF A COMPLETE AND OPERABLE GRINDER PUMP STATION SHALL BE IN HAND PRIOR TO MOBILIZATION TO EACH GRINDER PUMP STATION SITE. WORK ON EACH GRINDER PUMP STATION MUST BE COMPLETE IN ITS ENTIRETY PRIOR TO DEMOBILIZATION AND MOBILIZATION TO ANOTHER GRINDER PUMP STATION SITE. THE INTENTION OF THIS PROPOSED ORDER OF WORK IS TO MINIMIZE THE AMOUNT AND DURATION OF DISRUPTIONS TO SEWER SERVICE AND LAKEFRONT ACCESS. THE CONTRACTOR SHALL SUBMIT ANY PROPOSED DEVIATIONS TO THIS ORDER OF WORK TO THE CONTRACTING AGENCY FOR APPROVAL PRIOR TO CONSTRUCTION.

1. INSTALL TESC MEASURES.
2. INSTALL NEW CHECK VALVE VAULT AND CONNECT TO EXISTING FORCE MAIN.
3. INSTALL TEMPORARY BY-PASS PUMPING PER THE APPROVED BYPASS PUMPING PLAN AND AS DESCRIBED IN THE SPECIFICATIONS.
4. INSTALL NEW ELECTRICAL VAULT(S) (REQUIRES SYSTEM SHUT DOWN).
5. PERFORM DEMOLITION AS SHOWN ON THE PLANS.
6. INSTALL NEW PUMPS, RAILS, DISCHARGE CONNECTIONS, ELECTRICAL AND CONTROL PANEL AS SHOWN ON THE PLANS.
7. PERFORM STARTUP TESTING.
8. REMOVE BY-PASS PUMPING EQUIPMENT.
9. BEGIN COMMISSIONING PHASE.
10. RESTORE SITE PER THE PLANS.

EXAMPLE OF SECTION NUMBERING SYSTEM AND PLAN/DRAWING TITLES

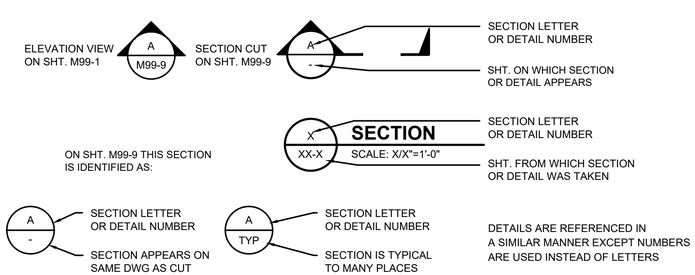

LEGEND

- GRINDER PUMP STATION 1 BASIN
- GRINDER PUMP STATION 2 BASIN
- GRINDER PUMP STATION 3 BASIN
- GRINDER PUMP STATION 4 BASIN

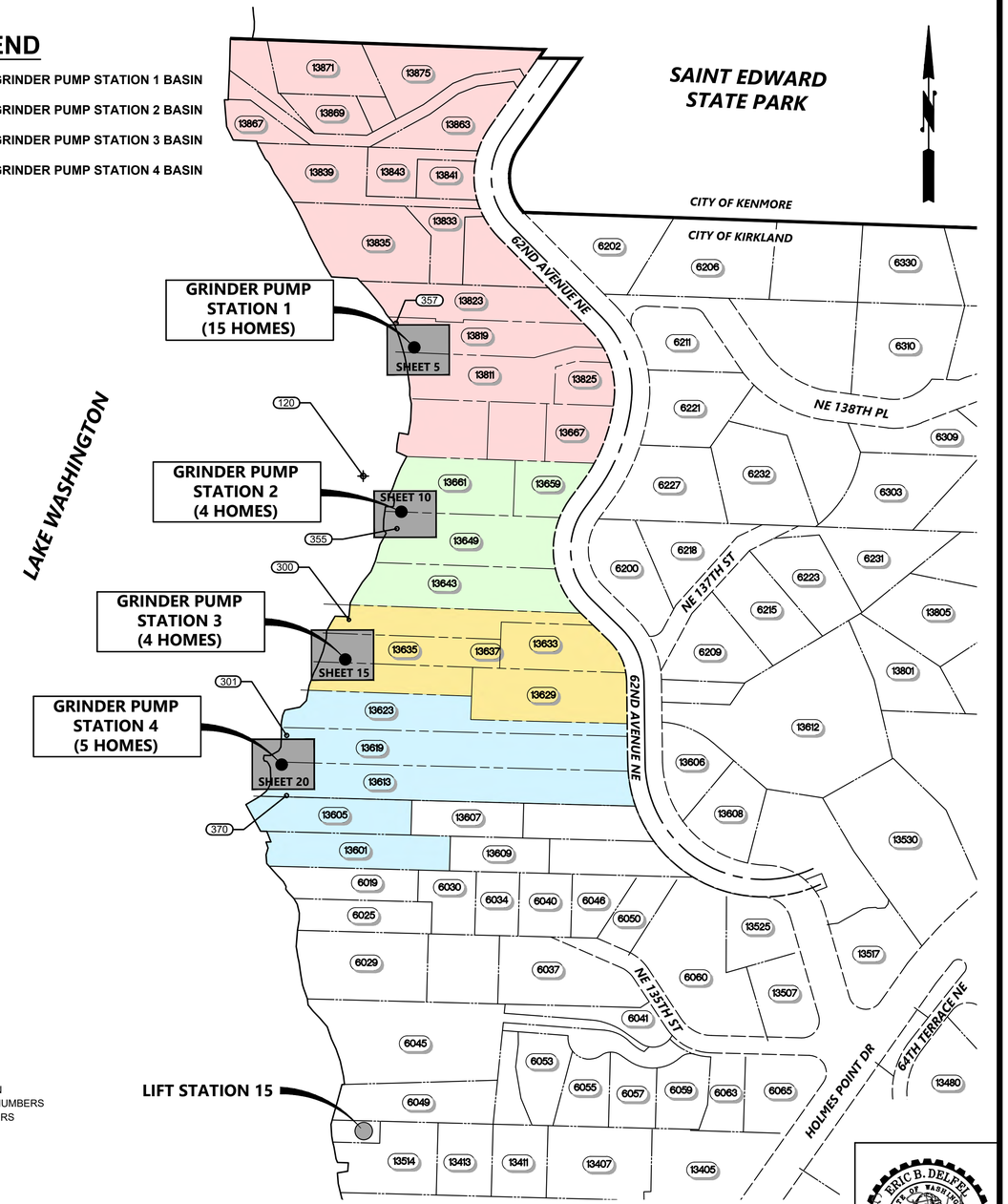

AREA MAP

NOT TO SCALE

ERIC B. DELFEL
STATE OF WASHINGTON
40195
REGISTERED
PROFESSIONAL ENGINEER
3/8/2023

NO	BY	APPD	REVISION	DATE

PERMIT SET - NOT FOR CONSTRUCTION

WARNING
0 ½ 1
IF THIS BAR DOES NOT MEASURE 1" THEN DRAWING IS NOT TO SCALE

Gray & Osborne, Inc
CONSULTING ENGINEERS

DESIGNED BY	HLT
DRAWN BY	HLT
CHECKED BY	EBD
APPROVAL	EBD
DATE	MAR 2023

NORTHSHORE UTILITY DISTRICT
WATER SEWER

NORTHSHORE UTILITY DISTRICT
6830 NE 185th St. Kenmore, WA 98028-2684
P.O. Box 82489 Kenmore, WA 98028-2684
Ph: (425) 398-4400 | Fax: (425) 398-4430 | www.nud.net

CONTRACT 2022-01
GRINDER PUMP STATIONS 1-4 REPLACEMENT

ABREVIATIONS & AREA MAP

BASE MAP H4
C2003
SHEET 2 OF 30

LEGEND

EXISTING	PROPOSED	DESCRIPTION
		PROPERTY LINE
		RIGHT OF WAY LINE
		EASEMENT
		CONSTRUCTION LIMITS
		ROOT BARRIER
FL		DITCH CENTERLINE
		SIDE SLOPE
8" DI W		WATER LINE
8" PVC SS		SANITARY SEWER LINE
FM		SEWER FORCE MAIN
SD		STORM DRAIN LINE
12" CONCRETE SD		STORM DRAIN CULVERT
FL		SWALE OR DITCH
G		GAS LINE
PWR		UNDERGROUND POWER LINE
OHP		OVERHEAD POWER LINE
T		TELEPHONE LINE
C		CABLE LINE
FO		FIBER OPTIC LINE
		WIRE FENCE
		WOOD FENCE
		CHAIN LINK FENCE
		WATER METER
		FIRE HYDRANT
		WATER VALVE
		BLOW OFF ASSEMBLY
		CLEAN OUT
		SANITARY MANHOLE
		STORM DRAIN MANHOLE
		STORM DRAIN CATCH BASIN
		GAS VALVE
		POWER POLE
		GUY ANCHOR
		LIGHT POLE
		SIGNAL POLE
P		ELECTRICAL VAULT
		ELECTRICAL HANDHOLE
		COMMUNICATIONS VAULT
		TELEPHONE HANDHOLE
		SIGN
		MONUMENT
		ROCKERY/ROCK WALL
		MAIL BOX(ES)
		CONIFER TREE
		DECORATIVE TREE
		DECIDUOUS TREE
		SHRUB
		RETAINING WALL
		CEMENT CONCRETE PAVEMENT
		CEMENT CONCRETE CURB, GUTTER
		ASPHALT CONCRETE PAVEMENT
		SAND
		GRAVEL
		GRASS
		FILTER FABRIC FENCE
XXXX		PROPERTY ADDRESS

GENERAL NOTES:

1. ALL CONSTRUCTION AND MATERIALS SHALL BE IN ACCORDANCE WITH THE REQUIREMENTS SPECIFIED IN THE CONTRACT SPECIFICATIONS.
2. THE APPROXIMATE LOCATIONS OF EXISTING UTILITIES ARE SHOWN ON THE PLANS FOR CONVENIENCE. THE CONTRACTOR SHALL BE RESPONSIBLE FOR VERIFICATION OF UTILITY LOCATIONS SHOWN, FOR THE PROTECTION AND REPAIR OF DAMAGED UTILITIES AND FOR THE DISCOVERY OF POSSIBLE ADDITIONAL UTILITIES NOT SHOWN ON THE PLANS. IT SHALL BE THE RESPONSIBILITY OF THE CONTRACTOR TO HAVE LOCATED, BY THE APPROPRIATE UTILITY DISTRICTS OR COMPANIES, ALL UNDERGROUND UTILITIES PRIOR TO BEGINNING CONSTRUCTION. FOR UTILITY LOCATES IN KING COUNTY, CALL 1–800–424–5555 PRIOR TO DIGGING.
3. A PRE–CONSTRUCTION CONFERENCE WILL BE HELD AT THE DISTRICT OFFICE PRIOR TO START OF CONSTRUCTION.
4. THE CONTRACTOR SHALL NOTIFY NORTHSHORE UTILITY DISTRICT A MINIMUM OF FIVE (5) DAYS IN ADVANCE OF BEGINNING CONSTRUCTION. CONSTRUCTION SHALL NOT BEGIN WITHOUT PRIOR WRITTEN NOTICE TO PROCEED BY THE DISTRICT.
5. THE CONTRACTOR SHALL NOT OPERATE ANY VALVES OR MAKE ANY CONNECTIONS TO THE EXISTING SYSTEM WITHOUT PRIOR APPROVAL FROM THE DISTRICT.
6. EACH GRINDER PUMP STATION SITE IS WITHIN AN EXISTING EASEMENT ON PRIVATE LAKEFRONT PROPERTY WITH LIMITED ACCESSIBILITY FOR LARGE EQUIPMENT AND MOTOR VEHICLES. THE MEANS AND METHODS FOR MOBILIZATION OF MATERIALS AND EQUIPMENT TO EACH SITE SHALL BE AT THE OPTION OF THE CONTRACTOR. HAND DIGGING AND/OR BARGING IN EQUIPMENT MAY BE NECESSARY FOR COMPLETION OF THE WORK SHOWN ON THE PLANS AND DESCRIBED IN THE SPECIFICATIONS.

SURVEY CONTROL DATA

HORIZONTAL DATUM:
WASHINGTON STATE COORDINATE SYSTEM, NORTH ZONE NAD83(91), US FEET UTILIZING RTK GPS FIELD PROCEDURES

VERTICAL DATUM: NAVD88, US FEET AS PRESCRIBED BY NORTHSHORE UTILITY DISTRICT.

TOPOGRAPHIC MAPPING:
THE MAP SHOWN HEREON IS THE RESULT OF A TOPOGRAPHIC SURVEY BY DUANE HARTMAN & ASSOCIATES, INC. (DHA) COMPLETED ON JANUARY 20, 2010 AND SUPLEMENTED BY SURVEY PERFORMED BY GRAY & OSBORNE INC. (G&O) ON AUGUST 6, 2020. DHA ASSUMES NO LIABILITY, BEYOND SAID DATE, FOR ANY FUTURE SURFACE FEATURE MODIFICATIONS OR CONSTRUCTION ACTIVITIES THAT MAY OCCUR WITHIN OR ADJOINING THE PERIMETER OF THIS SURVEY.

BENCHMARKS:

CONTROL POINT TABLE

POINT	NORTHING	EASTING	ELEV.	DESCRIPTION
120	267491.59	1289078.46	20.20	SSLT, *** TALK TO HOMEOWNER BEFORE USING POINT AGAIN*** JUST TACK ON DOCK. 3.4' SE OF W'LY DOCK EDGE. 4.7' W-SW OF ONLY LIGHT IN NE-SW MID POINT ON E'LY SIDE. 11.3' NE'LY OF SW'LY END CTR DOCK. TACK IS IN THE 6TH PLANK FROM W'LY SIDE & E'LY SIDE(CTR). 0.03 E'LY FROM W'LY EDGE OF CTR PLANK.
300	267243.04	1289053.59	19.31	SFR, 5/8" REBAR NO CAP. 0.25' DOWN IN SAND. NE'LY QUAD BEACH. 3.5' W-NW OF EDGE GRASS. ~7.25' S-SW OF ANGLE POINT DOCK AND GRASS. ~10' S OF SLIDING SIDE DOOR TO BOAT HOUSE. 10.6' S-SW OF SE BOAT HSE COR.
301	267043.25	1288946.21	19.43	SFRC, 5/8" REBAR W/RED CAP "DHA CONT" IN W'LY EDGE GRASS PROP. N OF GRINDER #4. 1.2' E OF W EDGE GRASS @ BEACH. ~7.3' N-NW OF N'LY END BULK HEAD(UNDER GRASS). ~19' W-NW OF CENTER FIRE PIT. ~28' W OF CL W FACE CABANA.
355	267400.73	1289136.83	21.71	SFRC 5/8" REBAR RED CAP "DHA CONT" 0.2' DOWN. 1.15' W OF W FACE WOOD RET WALL. ~3.1' S-SW OF NW COR RET WALL. ~15' NE OF NW COR DECK.
357	267755.62	1289135.01	19.53	SFRC, 21.2' N15E OF CTR N'LY DOCK LIGHT ON E SIDE(SHORE) OF DOCK IN BEACH.
370	266939.29	1288945.82	23.94	SFRC, 5/8" REBAR W/RED CAP "DHA CONT" 0.1' DOWN IN GRASS. 1' N OF WOOD FENCE. ~4.9' SW OF SW'LY BC. ~5.4' E-NE OF W END WOOD FENCE.

SURVEY SYMBOLS

EXISTING	PROPOSED	DESCRIPTION
		BENCH MARK
		IRON PIPE/REBAR

TEMPORARY EROSION AND SEDIMENTATION CONTROL NOTES

1. THE TEMPORARY EROSION AND SEDIMENTATION CONTROL (TESC) FACILITIES SHALL BE IMPLEMENTED PRIOR TO THE START OF ANY CONSTRUCTION ACTIVITIES, AND IN SUCH A MANNER AS TO ENSURE THAT SEDIMENT WATER DOES NOT ENTER THE DRAINAGE SYSTEM OR VIOLATE APPLICABLE WATER STANDARDS. MAINTENANCE, REPLACEMENT, AND UPGRADING OF THESE TESC FACILITIES IS THE RESPONSIBILITY OF THE CONTRACTOR UNTIL ALL CONSTRUCTION IS APPROVED.
2. THE STORM DRAIN INLET PROTECTION DEVICE SHALL BE SILT SACK OR EQUAL. ALL CATCH BASINS WITHIN THE VICINITY OF THE CONSTRUCTION SHALL HAVE INLET PROTECTION MEASURES.
3. CONTRACTOR SHALL MAINTAIN ALL EXISTING DRAINAGE CHANNELS, CULVERTS, SWALES AND STRUCTURES. WHENEVER EXISTING DRAINAGE FACILITIES ARE DISTURBED, THE CONTRACTOR SHALL PROVIDE SUITABLE MEANS FOR DIVERTING AND MAINTAINING ALL FLOWS DURING CONSTRUCTION IN THAT AREA AT ITS EXPENSE. AFTER CONSTRUCTION HAS BEEN COMPLETED, ALL DRAINAGE CHANNELS, CULVERTS, SWALES AND STRUCTURES DISTURBED SHALL BE RETURNED TO THEIR ORIGINAL CONDITIONS.
4. THE TESC FACILITIES SHOWN ON THIS PLAN ARE THE MINIMUM REQUIREMENTS FOR ANTICIPATED SITE CONDITIONS. DURING THE CONSTRUCTION PERIOD, TESC FACILITIES SHALL BE MAINTAINED AND UPGRADED AS NECESSARY BY THE CONTRACTOR.
5. CONTRACTOR SHALL INSPECT THE TESC FACILITIES AT THE END OF EACH WORKING DAY TO ASSURE ITSELF THAT THEY ARE IN GOOD CONDITIONS. IF TESC FACILITIES REQUIRE REPAIR/MAINTENANCE, IT SHALL BE PERFORMED PRIOR TO THE END OF THE WORKING DAY. ALL DISTURBED AREAS SHALL BE PROMPTLY AND THOROUGHLY STABILIZED AGAINST EROSION DURING PERIODS OF WET WEATHER WHEN WORK IS NOT BEING PERFORMED AT THE SITE.
6. ALL UNSUITABLE OR SURPLUS EXCAVATED OR CLEARED MATERIAL SHALL BE REMOVED FROM THE SITE AND DISPOSED OF IN AN APPROVED, LEGAL FILL SITE. IT SHALL BE THE CONTRACTOR'S RESPONSIBILITY TO LOCATE ACCEPTABLE DISPOSAL SITES AND ASSURE THAT ALL SURPLUS MATERIAL IS DISPOSED OF IN SAME.
7. CONTRACTOR SHALL BE RESPONSIBLE FOR IMPLEMENTING ALL APPROPRIATE MEASURES NEEDED (STREET SWEEPERS, WATER TRUCKS, ETC.) TO KEEP STREETS AND ROADS USED AS HAUL ROUTES FOR EXPORT OR IMPORT OF MATERIAL CLEAN AND FREE FROM DEBRIS, MUD, ETC.. ADDITIONAL MEASURES MAY BE REQUIRED TO ENSURE THAT ALL PAVED AREAS ARE KEPT CLEAN FOR THE DURATION OF THE PROJECT.

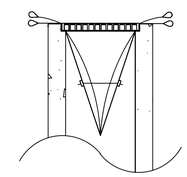

INSTALLATION DETAIL

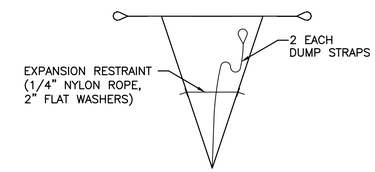

BAG DETAIL

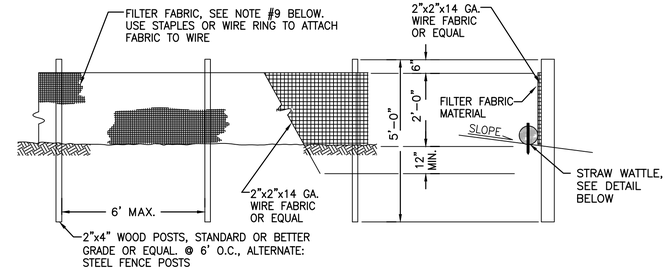

NOTES

1. THE FILTER FABRIC SHALL BE PURCHASED IN A CONTINUOUS ROLL CUT TO THE LENGTH OF THE BARRIER TO AVOID USE OF JOINTS. WHEN JOINTS ARE NECESSARY, FILTER CLOTH SHALL BE SPLICED TOGETHER ONLY AT A SUPPORT POST, WITH A MINIMUM 6–INCH OVERLAP AND BOTH ENDS SECURELY FASTENED TO THE POST.
2. THE FILTER FABRIC FENCE SHALL BE INSTALLED TO FOLLOW THE CONTOURS (WHERE FEASIBLE). THE FENCE POSTS SHALL BE SPACED A MAXIMUM OF 6 FEET APART AND DRIVEN SECURELY INTO THE GROUND (MINIMUM OF 30 INCHES).
3. WHEN STANDARD STRENGTH FILTER FABRIC IS USED, A WIRE MESH SUPPORT FENCE SHALL BE FASTENED SECURELY TO THE UPSLOPE SIDE OF THE POSTS USING HEAVY–DUTY WIRE STAPLES AT LEAST 1 INCH LONG, TIE WIRE OR HOG RINGS.
4. THE STANDARD STRENGTH FILTER FABRIC SHALL BE STAPLED OR WIRED TO THE FENCE, AND 20 INCHES OF THE FABRIC SHALL BE EXTENDED ACROSS THE GROUND, UPSLOPE AND ADJACENT TO THE WOOD POST. THE FABRIC SHALL NOT EXTEND MORE THAN 30 INCHES ABOVE THE ORIGINAL GROUND SURFACE. FILTER FABRIC SHALL NOT BE STAPLED TO EXISTING TREES.
5. WHEN EXTRA FILTER FABRIC AND CLOSER POST SPACING ARE USED, THE WIRE MESH SUPPORT FENCE MAY BE ELIMINATED. IN SUCH A CASE, THE FILTER FABRIC IS STAPLED OR WIRED DIRECTLY TO THE POSTS WITH ALL OTHER PROVISIONS OF STANDARD NOTE 3 APPLYING.
6. FABRIC SHALL BE SECURED AT THE BASE BY PEA–ROCK FILLED SANDBAGS OR STRAW WATTLES PLACED END TO END.
7. FILTER FABRIC FENCES SHALL BE REMOVED WHEN THEY HAVE SERVED THEIR USEFUL PURPOSE, BUT NOT BEFORE THE UPSLOPE AREA HAS BEEN PERMANENTLY STABILIZED.
8. FILTER FABRIC FENCES SHALL BE INSPECTED IMMEDIATELY AFTER EACH RAINFALL AND AT LEAST DAILY DURING PROLONGED RAINFALL. ANY REQUIRED REPAIRS SHALL BE MADE IMMEDIATELY.
9. FILTER FABRIC SHALL BE PER CURRENT GEOTEXTILE FABRIC STANDARDS FOR SILT FENCE IN THE DEPARTMENT OF ECOLOGY STORMWATER MANAGEMENT MANUAL FOR WESTERN WASHINGTON.

HIGH VISIBILITY FILTER FABRIC FENCE
NOT TO SCALE

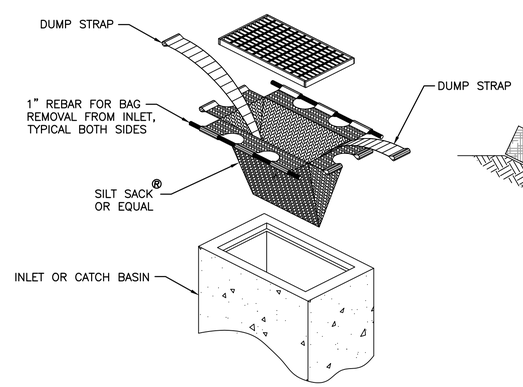

STORM DRAIN INLET PROTECTION
NOT TO SCALE

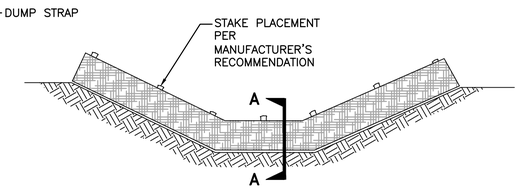

PLACEMENT OF STRAW WATTLE

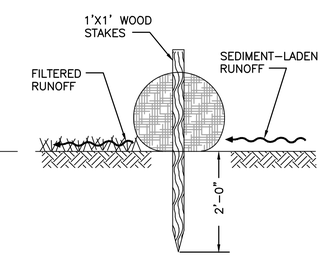

CROSS SECTION A-A

STRAW WATTLE DAM
NOT TO SCALE

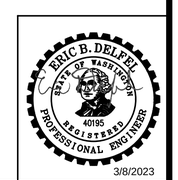

3/8/2023

NO	BY	APPD	REVISION	DATE

PERMIT SET - NOT FOR CONSTRUCTION

WARNING
0 ½ 1
IF THIS BAR DOES NOT MEASURE 1" THEN DRAWING IS NOT TO SCALE

Gray & Osborne, Inc
CONSULTING ENGINEERS

DESIGNED BY	HLT
DRAWN BY	HLT
CHECKED BY	EBD
APPROVAL	EBD
DATE	MAR 2023

NORTHSHORE UTILITY DISTRICT
WATER SEWER
NORTHSHORE UTILITY DISTRICT
6830 NE 185th St. Kenmore, WA 98028-2684
P.O. Box 82489 Kenmore, WA 98028-2684
Ph: (425) 398-4400 | Fax: (425) 398-4430 | www.nud.net

CONTRACT 2022-01
GRINDER PUMP STATIONS 1-4 REPLACEMENT

GENERAL NOTES, LEGEND, & TESC

BASE MAP H4
C2003
SHEET
3 *OF* 30

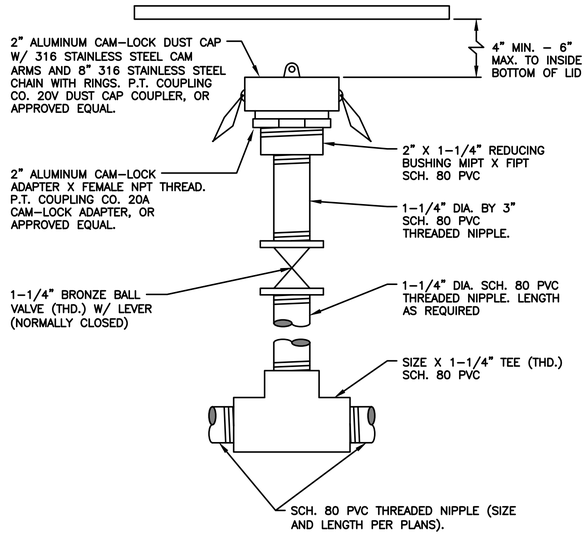

1 TYP — **QUICK COUPLING BYPASS PUMPING CONNECTION**
NTS

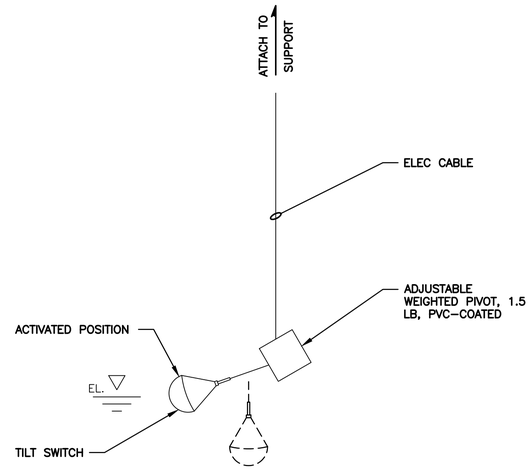

2 TYP — **HIGH LEVEL FLOAT DETAIL**
NTS

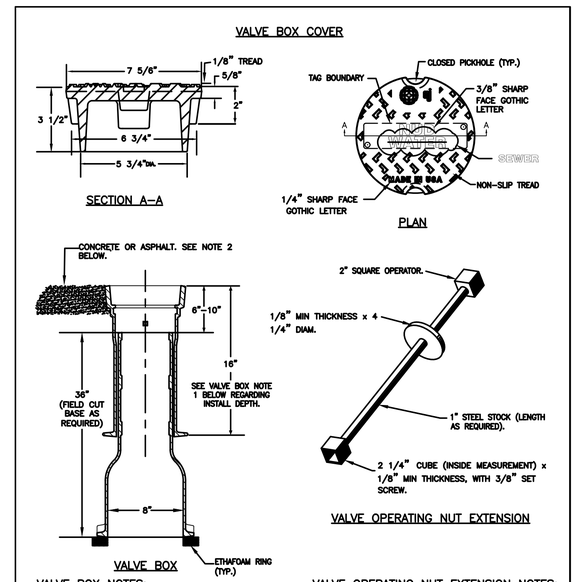

VALVE BOX NOTES:

1. CAST-IRON VALVE BOX AND COVER SHALL BE EAST JORDAN IRON WORKS: VALVE BOX COVER 06800209, VALVE BOX TOP 85557016U, AND VALVE BOX BOTTOM 85556036U. FOR SHALLOW OR DEEP INSTALLS, VALVE BOX TOP SHALL BE DETERMINED BY THE DISTRICT.
2. IF VALVE BOX IS IN AN UNPAVED AREA, PROVIDE 1' RADIUS x 4" MINIMUM DEPTH CONCRETE OR ASPHALT PAVING AROUND VALVE BOX. CONCRETE SHALL HAVE A BROOM/TROWEL FINISH.
3. INSTALL ETHAFOAM RING BETWEEN BASE OF VALVE BOX AND GATE VALVES OR ON CONCRETE BRICKS FOR BALL VALVES.

VALVE OPERATING NUT EXTENSION NOTES:

1. VALVE OPERATING NUT EXTENSIONS ARE REQUIRED WHEN VALVE NUT IS MORE THAN 5' BELOW FINISHED GRADE.
2. LENGTH AS REQUIRED TO PUT OPERATING NUT TWO (2) FEET FROM FINISHED GRADE.
3. EXTENSIONS TO BE A MINIMUM OF TWO (2) FEET LONG.
4. ONE (1) EXTENSION PER VALVE.
5. NO ADJUSTABLE VALVE EXTENSIONS ALLOWED.
6. WHEN AN EXTENSION IS REQUIRED, USE A SOILS PIPE BETWEEN VALVE BOX TOP AND VALVE BOX BOTTOM. LENGTH TO FIT.

VALVE BOX & OPERATING NUT EXTENSION
NOT TO SCALE

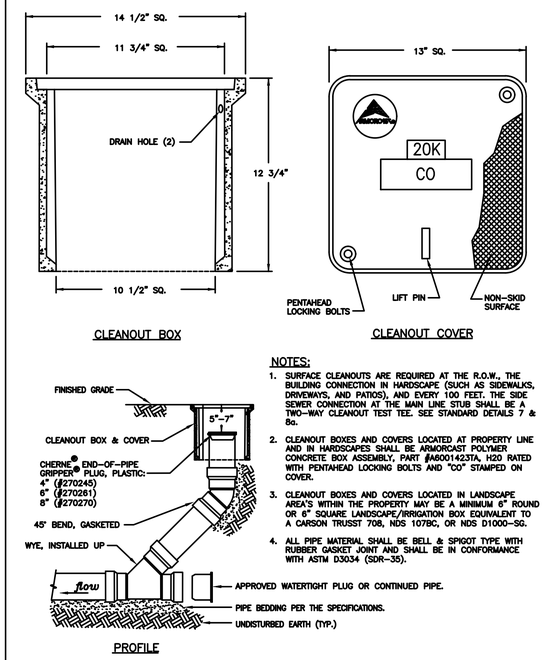

NOTES:

1. SURFACE CLEANOUTS ARE REQUIRED AT THE R.O.W., THE BUILDING CONNECTION IN HARDSCAPE (SUCH AS SIDEWALKS, DRIVEWAYS, AND PATIOS), AND EVERY 100 FEET. THE SIDE SEWER CONNECTION AT THE MAIN LINE STUB SHALL BE A TWO-WAY CLEANOUT TEST TEE. SEE STANDARD DETAILS 7 & 8a.
2. CLEANOUT BOXES AND COVERS LOCATED AT PROPERTY LINE AND IN HARDSCAPES SHALL BE ARMORCAST POLYMER CONCRETE BOX ASSEMBLY, PART #A60014235A, H20 RATED WITH PENTAHEAD LOCKING BOLTS AND "CO" STAMPED ON COVER.
3. CLEANOUT BOXES AND COVERS LOCATED IN LANDSCAPE AREA'S WITHIN THE PROPERTY MAY BE A MINIMUM 6" ROUND OR 6" SQUARE LANDSCAPE/IRRIGATION BOX EQUIVALENT TO A CARSON TRUSST 708, NDS 107BC, OR NDS D1000-SG.
4. ALL PIPE MATERIAL SHALL BE BELL & SPIGOT TYPE WITH RUBBER GASKET JOINT AND SHALL BE IN CONFORMANCE WITH ASTM D3034 (SDR-35).

SIDE SEWER SURFACE CLEANOUT
NOT TO SCALE

DETAIL APPROVALS	NORTHSHORE UTILITY DISTRICT	
EDITOR TMC	2021 STANDARD WATER DETAILS MODIFIED	11 LAST UPDATED APRIL 2021
MANAGER SJD		

DETAIL APPROVALS	NORTHSHORE UTILITY DISTRICT	
EDITOR TMC	2022 STANDARD SEWER DETAILS	9 LAST UPDATED APRIL 2021
MANAGER SJD		

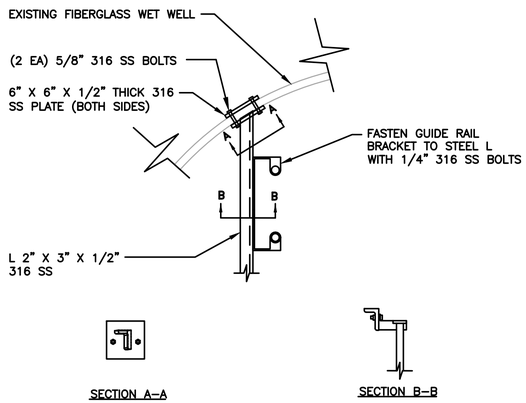

NOTES:

1. MOUNT GUIDE RAIL BRACKET SUPPORT 6" BELOW RIM ELEVATION OF EXISTING WET WELL
2. ALL HARDWARE AND ACCESSORIES SHALL BE 316 SS UNLESS NOTED OTHERWISE.

3 TYP — **GUIDE RAIL BRACKET SUPPORT**
NTS

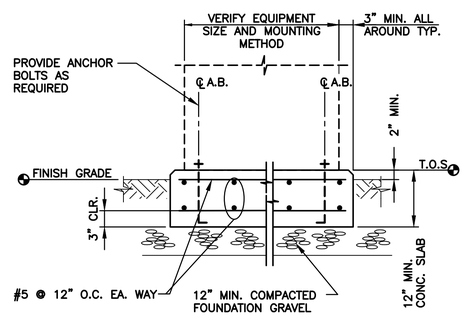

4 TYP — **EXTERIOR EQUIPMENT PANEL 12" CONCRETE PAD DETAIL**
NTS

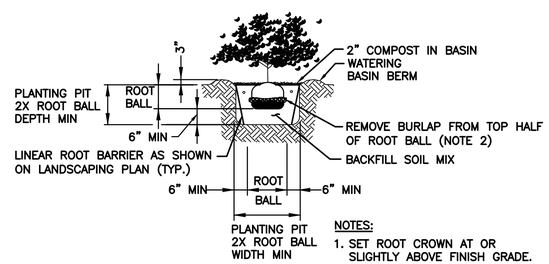

NOTES:

1. SET ROOT CROWN AT OR SLIGHTLY ABOVE FINISH GRADE.
2. REMOVE TREATED OR SYNTHETIC BURLAP COMPLETELY.
3. SCARIFY BOTTOM AND SIDES OF PLANTING PIT.
4. INSTALL ROOT BARRIER AS SHOWN ON THE PLANS IN ORDER TO PROTECT NEW/EXISTING FACILITIES. ROOT BARRIERS SHALL BE "DEEP ROOT" MODEL NO. UB 36-2 OR APPROVED EQUAL.

5 TYP — **SHRUB PLANTING DETAIL**
NOT TO SCALE

ERIC B. DELFEL — STATE OF WASHINGTON — 40195 — REGISTERED PROFESSIONAL ENGINEER
3/8/2023

NO	BY	APPD	REVISION	DATE

PERMIT SET - NOT FOR CONSTRUCTION

WARNING
0 ½ 1
IF THIS BAR DOES NOT MEASURE 1" THEN DRAWING IS NOT TO SCALE

Gray & Osborne, Inc. CONSULTING ENGINEERS

DESIGNED BY	HLT
DRAWN BY	HLT
CHECKED BY	EBD
APPROVAL	EBD
DATE	MAR 2023

NORTHSHORE UTILITY DISTRICT
6830 NE 185th St. Kenmore, WA 98028-2684
P.O. Box 82489 Kenmore, WA 98028-2684
Ph: (425) 398-4400 | Fax: (425) 398-4430 | www.nud.net

CONTRACT 2022-01
GRINDER PUMP STATIONS 1-4 REPLACEMENT

GENERAL DETAILS

BASE MAP H4
C2003
SHEET 4 *OF* 30

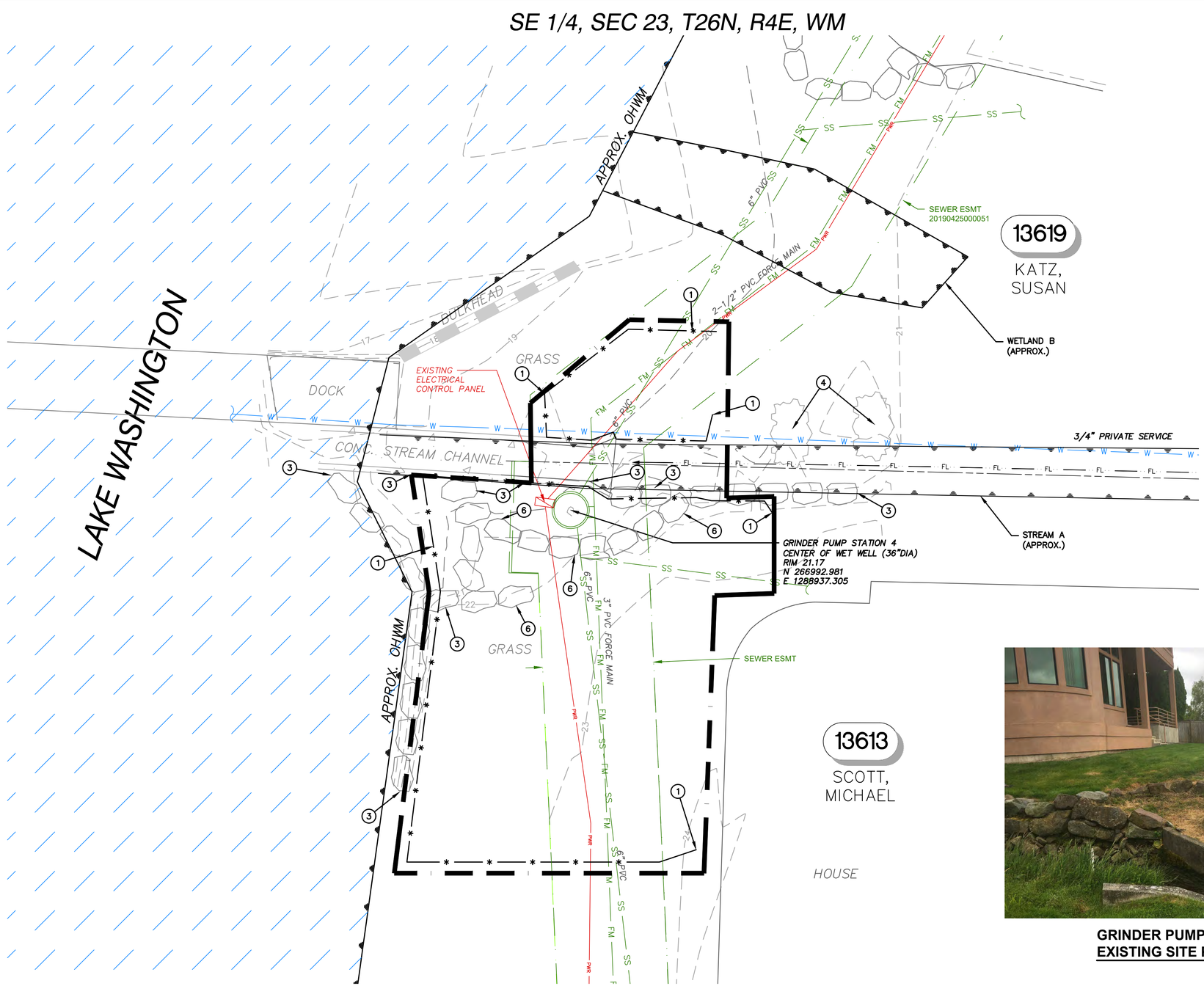

GRINDER PUMP STATION 4
EXISTING SITE PHOTOGRAPH

5' 0' 5' 10'
SCALE IN FEET

NOTES

1. LOCATION, SIZE, AND MATERIAL OF EXISTING UTILITIES SHOWN ARE APPROXIMATE. CONTRACTOR SHALL POTHOLE TO LOCATE EXISTING UTILITIES PRIOR TO EXCAVATION.
2. EACH GRINDER PUMP STATION SITE IS WITHIN AN EXISTING EASEMENT ON PRIVATE LAKEFRONT PROPERTY WITH LIMITED ACCESSIBILITY FOR LARGE EQUIPMENT AND MOTOR VEHICLES. THE MEANS AND METHODS FOR MOBILIZATION OF MATERIALS AND EQUIPMENT TO EACH SITE SHALL BE AT THE OPTION OF THE CONTRACTOR. HAND DIGGING AND/OR BARGING IN EQUIPMENT MAY BE NECESSARY FOR COMPLETION OF THE WORK SHOWN ON THE PLANS AND DESCRIBED IN THE SPECIFICATIONS.
3. INSTALL TESC FACILITIES PER SHEET 3.
4. SEE EROSION CONTROL NOTES SHEET 3.
5. PROTECT ALL TREES AND HEDGES, UNLESS OTHERWISE NOTED ON PLANS.
6. PRIOR TO COMMENCING CONSTRUCTION, THE CONTRACTOR SHALL COORDINATE WITH THE DISTRICT AND THE PROPERTY OWNERS REGARDING THE REMOVAL AND RESTORATION OF EXISTING LANDSCAPE FEATURES.

CONSTRUCTION NOTES

1. INSTALL FILTER FABRIC FENCE PER DETAIL, SHEET 3.
2. PROTECT EXISTING FENCE.
3. PROTECT EXISTING WALL/ROCKERY.
4. PROTECT EXISTING TREE/SHRUB.
5. REMOVE EXISTING TREE/SHRUB.
6. REMOVE EXISTING ROCKERY.

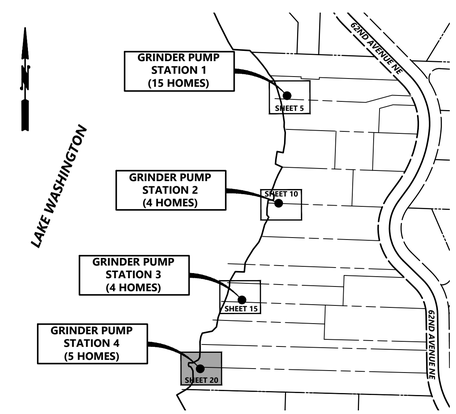

SHEET KEY MAP
NTS

ERIC B. DELFAL
STATE OF WASHINGTON
40195
REGISTERED PROFESSIONAL ENGINEER
3/8/2023

NO	BY	APPD	REVISION	DATE

PERMIT SET - NOT FOR CONSTRUCTION

WARNING
0 ½ 1
IF THIS BAR DOES NOT MEASURE 1" THEN DRAWING IS NOT TO SCALE

Gray & Osborne, Inc
CONSULTING ENGINEERS

DESIGNED BY	HLT
DRAWN BY	HLT
CHECKED BY	EBD
APPROVAL	EBD
DATE	MAR 2023

NORTHSHORE UTILITY DISTRICT
6830 NE 185th St. Kenmore, WA 98028-2684
P.O. Box 82489 Kenmore, WA 98028-2684
Ph: (425) 398-4400 | Fax: (425) 398-4430 | www.nud.net

CONTRACT 2022-01
GRINDER PUMP STATIONS 1-4 REPLACEMENT

GRINDER PUMP STATION 4 EXISTING SITE & TESC PLAN

BASE MAP H4
C2003
SHEET 20 OF 30

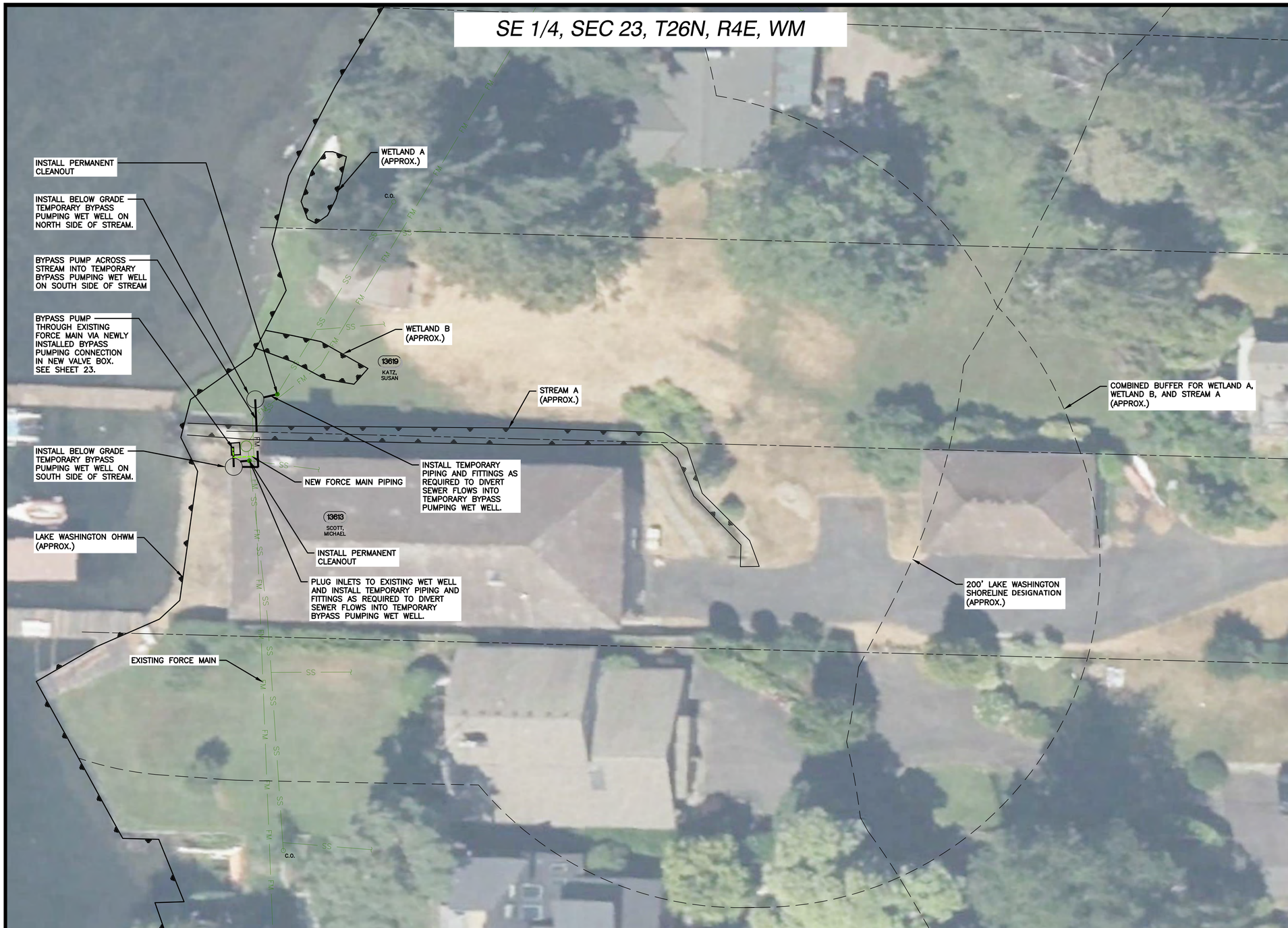

N

20' 0' 20' 40'
SCALE IN FEET

NOTES

1. LOCATION, SIZE, AND MATERIAL OF EXISTING UTILITIES SHOWN ARE APPROXIMATE. CONTRACTOR SHALL POTHOLE TO LOCATE EXISTING UTILITIES PRIOR TO EXCAVATION.
2. BYPASS PUMPING PLAN SHOWN IS A CONCEPTUAL REPRESENTATION OF ONE PUMPING OPTION AVAILABLE TO THE CONTRACTOR. THE CONTRACTOR SHALL SUBMIT THEIR PROPOSED BYPASS PUMPING PLAN TO THE DISTRICT FOR APPROVAL PRIOR TO STARTING CONSTRUCTION.
3. WORK ON GRINDER PUMP 4 MUST BE COMPLETE IN ITS ENTIRETY PRIOR TO DEMOBILIZATION AND MOBILIZATION TO ANOTHER GRINDER PUMP SITE.
4. PREVENT DIRT, ROCKS, AND DEBRIS FROM ENTERING ALL PIPES AND MANHOLES.
5. CONTRACTOR SHALL MONITOR ALL GRINDER PUMP STATIONS DURING ANY ELECTRICAL SHUTDOWNS TO THE MAIN CONDUCTOR FEEDING ALL OF THE STATIONS AND BYPASS SEWER FLOWS AS REQUIRED.

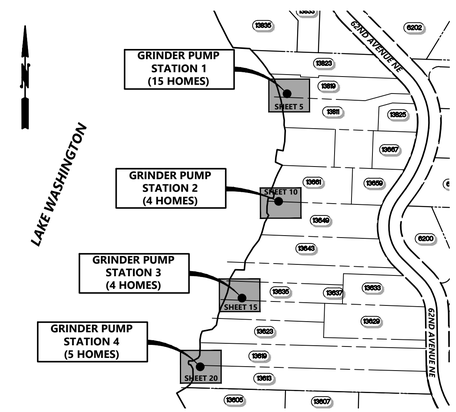

SHEET KEY MAP
NTS

ERIC B. DELFEL
STATE OF WASHINGTON
40195
REGISTERED PROFESSIONAL ENGINEER
3/8/2023

NO	BY	APPD	REVISION	DATE

PERMIT SET - NOT FOR CONSTRUCTION

WARNING
0 ½ 1
IF THIS BAR DOES NOT MEASURE 1" THEN DRAWING IS NOT TO SCALE

Gray & Osborne, Inc
CONSULTING ENGINEERS

DESIGNED BY	HLT
DRAWN BY	HLT
CHECKED BY	EBD
APPROVAL	EBD
DATE	NOV 2022

NORTHSHORE UTILITY DISTRICT
6830 NE 185th St. Kenmore, WA 98028-2684
P.O. Box 82489 Kenmore, WA 98028-2684
Ph: (425) 398-4400 | Fax: (425) 398-4430 | www.nud.net

CONTRACT 2022-01
GRINDER PUMP STATIONS 1-4 REPLACEMENT

GRINDER PUMP STATION 4
BYPASS PUMPING PLAN

BASE MAP H4
C2003
SHEET
21 *OF* 30

SE 1/4, SEC 23, T26N, R4E, WM

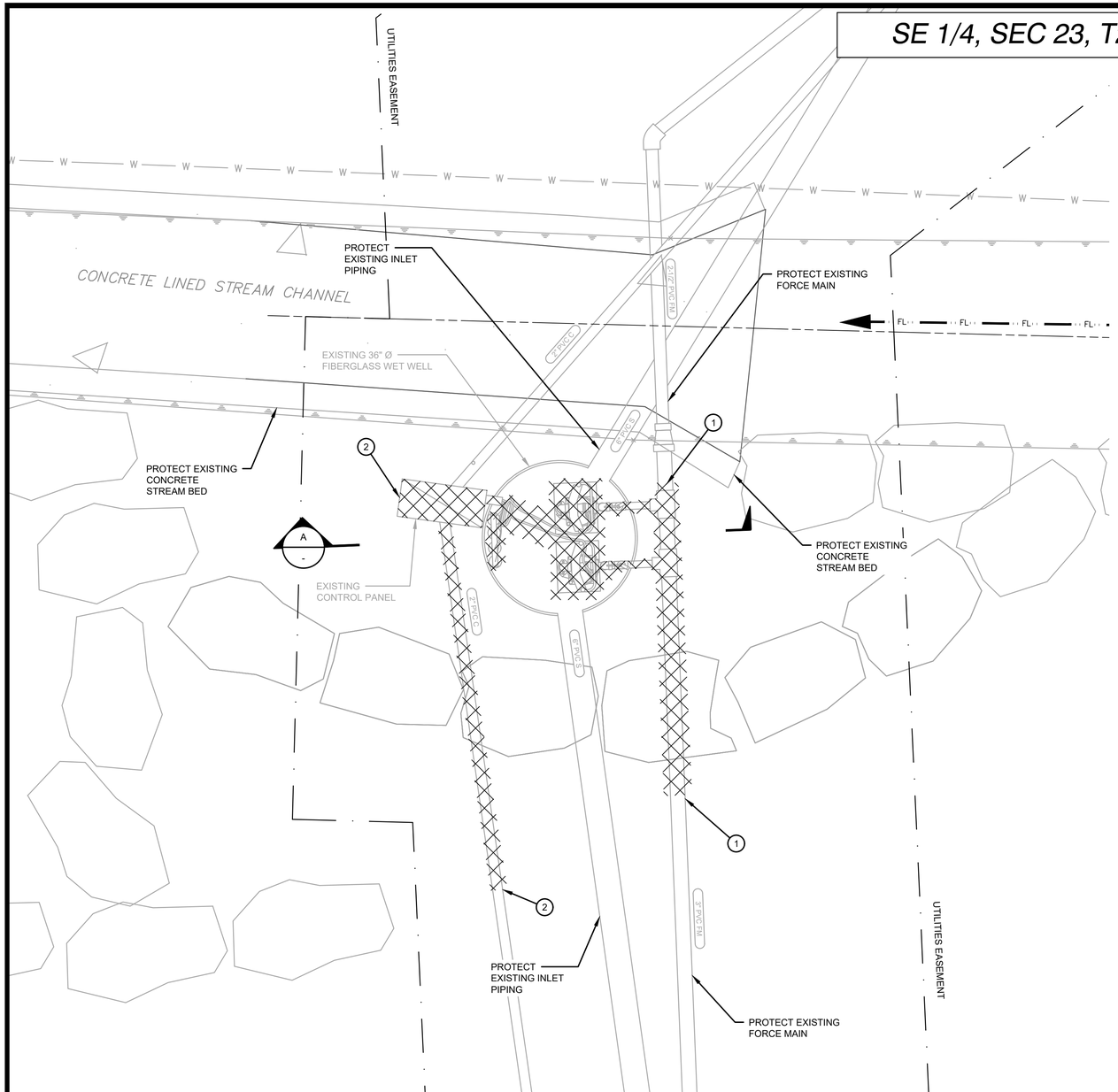

PLAN
SCALE: 3/4"=1'-0"

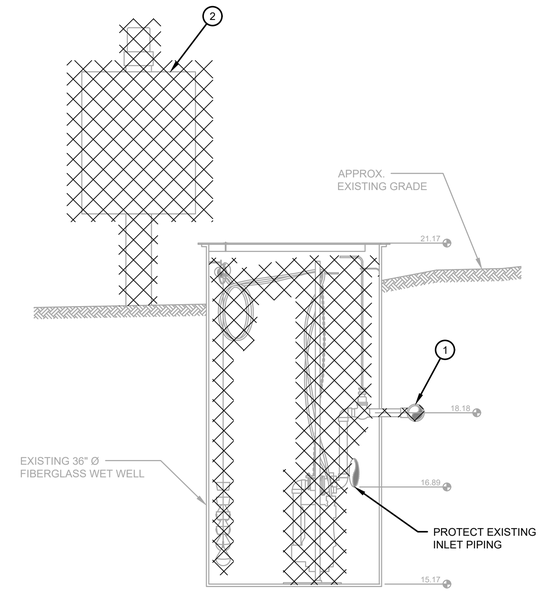

SECTION
SCALE: 3/4"=1'-0"

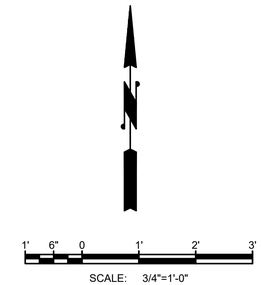

SCALE: 3/4"=1'-0"

GENERAL NOTES

1. REMOVE AND WASTEHAUL PUMPS, FLOATS, SUPPORTS, RAILS, BRACKETS, CABLES, PIPING, AND FITTINGS AS REQUIRED TO INSTALL NEW FACILITIES AS SHOWN ON THE PROPOSED SITE PLAN.
2. PATCH HOLES IN WET WELL WITH FIBERGLASS FABRIC AND RESIN LAMINATE OR APPROVED EQUAL. WET WELL REPAIR SHALL RESULT IN A WATERTIGHT WET WELL.
3. LOCATION, SIZE, AND MATERIAL OF EXISTING UTILITIES SHOWN IS APPROXIMATE. CONTRACTOR SHALL POTHOLE TO LOCATE EXISTING UTILITIES PRIOR TO CONSTRUCTION.

DEMOLITION NOTES

1. DEMOLISH AND WASTEHAUL FORCE MAIN AS REQUIRED, SEE PROPOSED SITE PLAN SHEET 23.
2. DEMOLISH AND WASTEHAUL EXISTING CONTROL PANEL, CONDUIT, AND ELECTRICAL EQUIPMENT.

LEGEND

DENOTES ITEMS TO BE REMOVED AND WASTEHAULED BY THE CONTRACTOR

EXISTING WET WELL PHOTOGRAPH

ERIC B. DELFEL — STATE OF WASHINGTON — 40195 — REGISTERED PROFESSIONAL ENGINEER
3/8/2023

NO	BY	APPD	REVISION	DATE

PERMIT SET - NOT FOR CONSTRUCTION

WARNING
0 ½ 1
IF THIS BAR DOES NOT MEASURE 1" THEN DRAWING IS NOT TO SCALE

Gray & Osborne, Inc. CONSULTING ENGINEERS

DESIGNED BY	HLT
DRAWN BY	HLT
CHECKED BY	EBD
APPROVAL	EBD
DATE	MAR 2023

NORTHSHORE UTILITY DISTRICT
6830 NE 185th St. Kenmore, WA 98028-2684
P.O. Box 82489 Kenmore, WA 98028-2684
Ph: (425) 398-4400 | Fax: (425) 398-4430 | www.nud.net

CONTRACT 2022-01
GRINDER PUMP STATIONS 1-4 REPLACEMENT

GRINDER PUMP STATION 4 DEMOLITION

BASE MAP H4
C2003
SHEET 22 OF 30

SE 1/4, SEC 23, T26N, R4E, WM

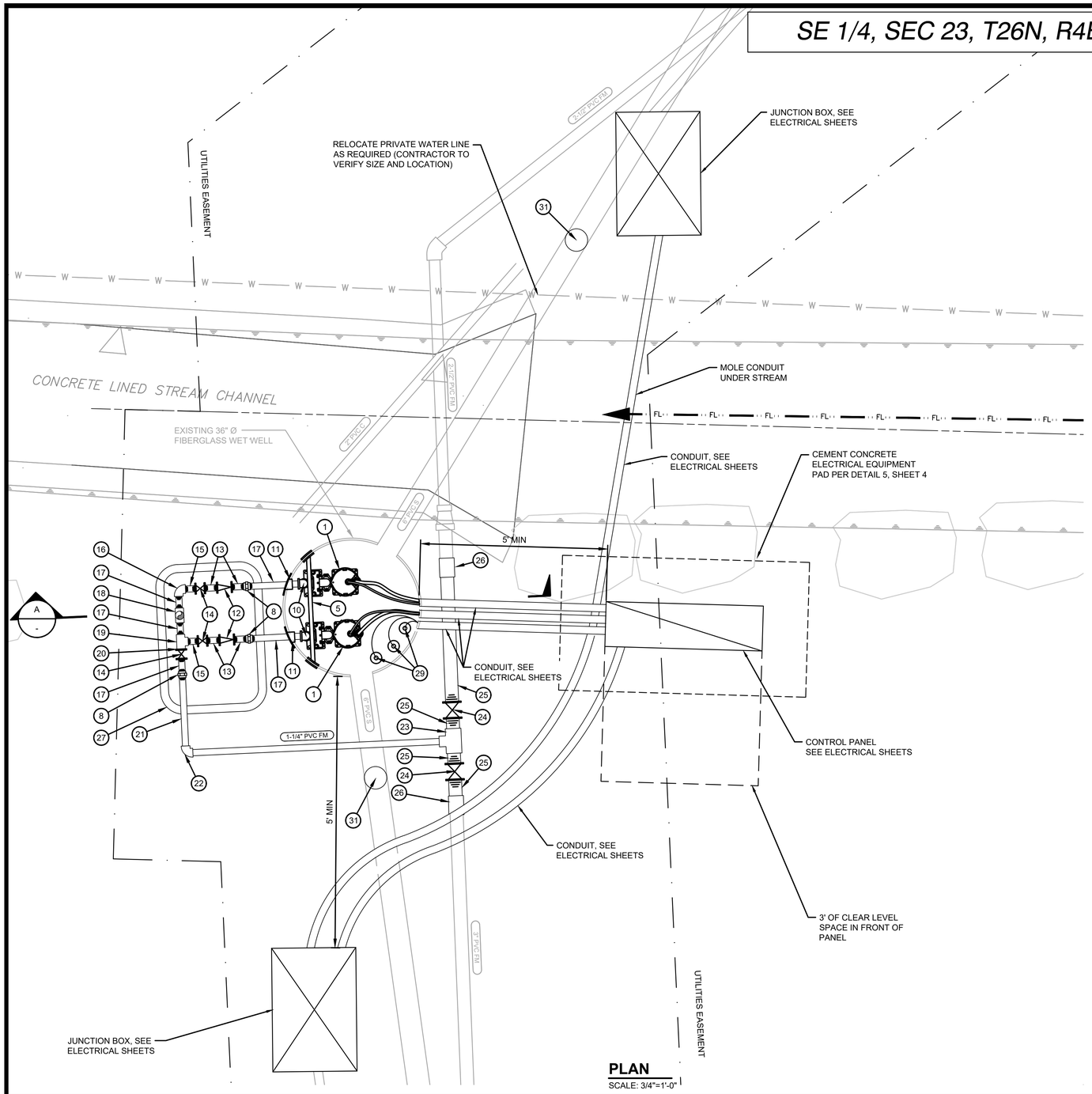

PLAN

SCALE: 3/4"=1'-0"

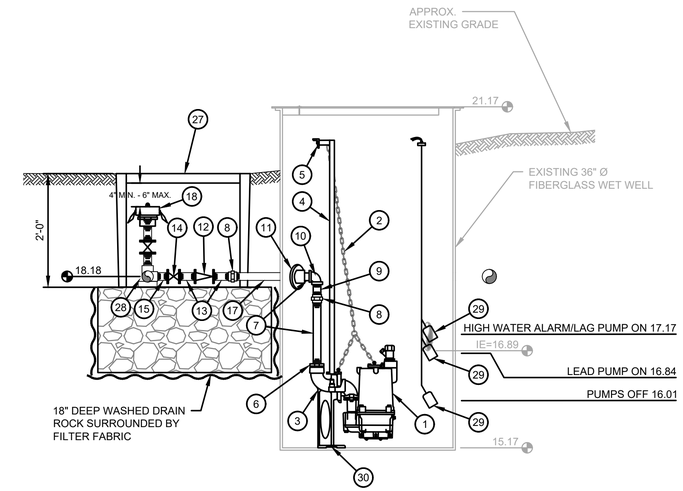

SECTION

SCALE: 3/4"=1'-0"

1' 6" 0 1' 2' 3'

SCALE: 3/4"=1'-0"

GENERAL NOTES:

1. PRIOR TO INSTALLATION OF NEW EQUIPMENT, THOROUGHLY CLEAN AND PREP EXISTING FIBERGLASS WET WELL.
2. PRIOR TO INSTALLATION OF NEW EQUIPMENT, REPAIR EXISTING PENETRATIONS TO THE FIBERGLASS WET WELL AS DESCRIBED ON THE DEMOLITION SHEET.
3. ALL STEEL HARDWARE AND ACCESSORIES SHALL BE 316 STAINLESS STEEL U.N.O.
4. NEW ELECTRICAL CONDUIT SHOWN FOR CLARITY ONLY. FOR SIZE AND MATERIAL SEE ELECTRICAL SHEETS. CONDUIT PENETRATIONS TO EXISTING FIBERGLASS WET WELL SHALL BE MADE WITH PFC 200 NYLON COUPLINGS BY CONERY OR APPROVED EQUAL.
5. EXISTING UTILITIES SHOWN ARE APPROXIMATE. CONTRACTOR SHALL VERIFY LOCATION OF EXISTING UTILITIES PRIOR TO CONSTRUCTION.
6. ALL PENETRATIONS TO THE EXISTING WET WELL SHALL BE WATER TIGHT.
7. EACH GRINDER PUMP STATION SITE IS WITHIN AN EXISTING EASEMENT ON PRIVATE LAKEFRONT PROPERTY WITH LIMITED ACCESSIBILITY FOR LARGE EQUIPMENT AND MOTOR VEHICLES. THE MEANS AND METHODS FOR MOBILIZATION OF MATERIALS AND EQUIPMENT TO EACH SITE SHALL BE AT THE OPTION OF THE CONTRACTOR. HAND DIGGING AND/OR BARGING IN EQUIPMENT MAY BE NECESSARY FOR COMPLETION OF THE WORK SHOWN ON THE PLANS AND DESCRIBED IN THE SPECIFICATIONS.

LEGEND:

1. HYDROMATIC HPGX 200 SUBMERSIBLE SEWAGE GRINDER PUMP TO BE PROVIDED BY OWNER AND INSTALLED BY CONTRACTOR.
2. SS LIFTING CHAIN TO BE PROVIDED BY OWNER AND INSTALLED BY CONTRACTOR.
3. 1-1/4" X 2" BERS-0125 CONERY DISCHARGE ELBOW TO BE PROVIDED BY OWNER AND INSTALLED BY CONTRACTOR.
4. 1" SS PUMP GUIDE RAIL SYSTEM AND GUIDE BRACKET TO BE PROVIDED BY OWNER AND INSTALLED BY CONTRACTOR.
5. GUIDE BRACKET SUPPORT PER DETAIL 4, SHEET 4.
6. 2" X 1-14" 316 SS REDUCING BUSHING.
7. 1-1/4" DIA. 316 SS THREADED NIPPLE (LENGTH TO FIT).
8. 1-1/4" 316 SS UNION, THREADED.
9. 1-1/4" DIA. 316 SS THREADED 2" NIPPLE.
10. 1-1/4" SS 90° BEND, THREADED.
11. 1-1/4" 316 SS DISCHARGE HUB, SFC 125 BY CONERY OR APPROVED EQUAL.
12. 1-1/4 BRONZE SWING CHECK VALVE.
13. 1-1/4" DIA. SCH. 80 PVC THREADED 3" NIPPLE.
14. 1-1/4" BRONZE BALL VALVE, FIPT X FIPT WITH LEVER.
15. 1-1/4" DIA. SCH. 80 PVC THREADED 2" NIPPLE..
16. 1-1/4" 90° BEND, SCH. 80 PVC THREADED
17. 1-1/4" DIA. SCH. 80 PVC THREADED NIPPLE (LENGTH TO FIT).
18. BYPASS-PUMPING CONNECTION. SEE DETAIL 2, SHEET 4.
19. 1-1/4" TEE, SCH 80 PVC THREADED.
20. 1-1/4" DIA. SCH. 80 PVC CLOSE NIPPLE, THREADED.
21. 1-1/4" DIA. SCH. 80 PVC NIPPLE, THREADED X PLAIN END (LENGTH TO FIT).
22. 1-1/4" 90° BEND, SCH. 80 PVC SOCKET WELDED.
23. 3" X 1-1/4" REDUCING TEE, SCH. 80 PVC SOCKET WELDED.
24. 3" BRONZE BALL VALVE, FITP X FITP WITH 2" OPERATING NUT AND VALVE BOX PER MODIFIED STANDARD DETAIL 11, SHEET 4.
25. 3" DIA. SCH. 80 PVC NIPPLE THREADED X PLAIN END (LENGTH TO FIT).
26. 3" COUPLING, SCH. 80 PVC SOCKET WELDED.
27. 24" X 36" VALVE BOX. DURALITE 2436 BY OLDCASTLE WITH PENTA HEAD BOLT DOWN SOLID T-COVER, OR APPROVED EQUAL.
28. CONCRETE BLOCK FOR PIPE SUPPORT AS REQUIRED (TYP).
29. FLOAT LEVEL SWITCH TO BE PROVIDED BY OWNER AND INSTALLED BY CONTRACTOR. CONTRACTOR SHALL FURNISH AND INSTALL 316 SS FLOAT SUPPORT T-TYPE BRACKET, 4FB BY CONERY WITH G1 CORD GRIPS OR APPROVED EQUAL.
30. CONTRACTOR SHALL PROVIDE MIN. 1/4" THICK 316 SS PLATE TO MOUNT BASE ELBOW TO. CONTRACTOR SHALL FIELD LOCATE HOLE FOR NEW BASE PLATE, CUT HOLE TO FIT TIGHT OVER NUT OF EXISTING ANCHOR BOLT, AND WELD EXISTING NUT TO NEW BASEPLATE.
31. INSTALL NEW CLEANOUT ON EXISTING INLET PIPING PER DETAIL 9 SHEET, 4.

ERIC B. DELFEL — STATE OF WASHINGTON — 40195 — REGISTERED PROFESSIONAL ENGINEER

3/8/2023

NO	BY	APPD	REVISION	DATE

PERMIT SET - NOT FOR CONSTRUCTION

WARNING

0 ½ 1

IF THIS BAR DOES NOT MEASURE 1" THEN DRAWING IS NOT TO SCALE

Gray & Osborne, Inc. CONSULTING ENGINEERS

DESIGNED BY	HLT
DRAWN BY	HLT
CHECKED BY	EBD
APPROVAL	EBD
DATE	MAR 2023

NORTHSHORE UTILITY DISTRICT — WATER SEWER

NORTHSHORE UTILITY DISTRICT

6830 NE 185th St. Kenmore, WA 98028-2684

P.O. Box 82489 Kenmore, WA 98028-2684

Ph: (425) 398-4400 | Fax: (425) 398-4430 | www.nud.net

CONTRACT 2022-01
GRINDER PUMP STATIONS 1-4 REPLACEMENT

PROPOSED GRINDER PUMP STATION 4

BASE MAP H4

C2003

SHEET 23 *OF* 30

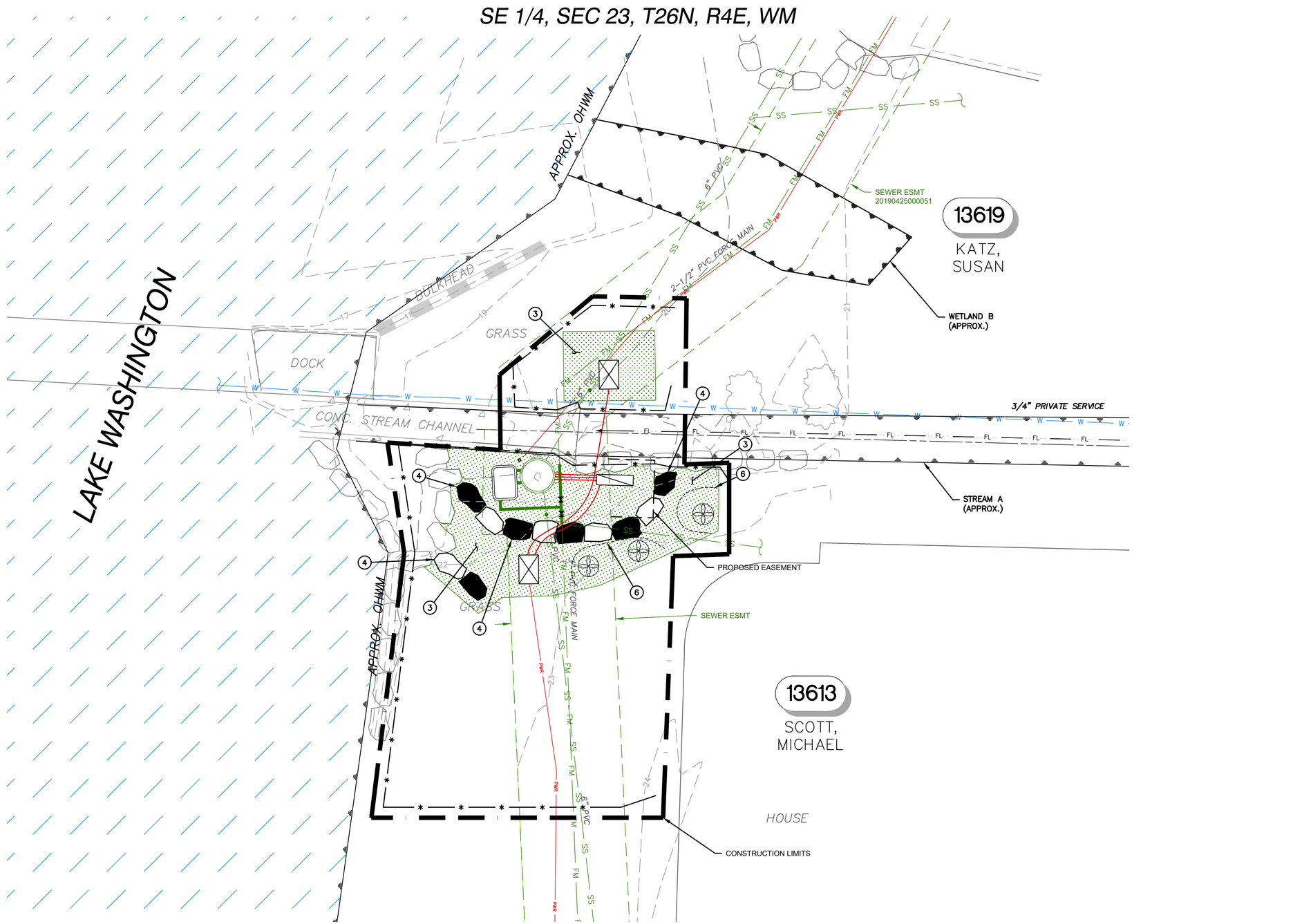

5' 0' 5' 10'
SCALE IN FEET

LEGEND

- SAND RESTORATION
- RIVER ROCK REPAIR
- LANDSCAPE RESTORATION

GENERAL NOTES

1. SEE SPECIFICATIONS FOR WORK AND PAYMENT INCLUDED IN GENERAL RESTORATION.
2. GRASS AREAS THAT ARE DAMAGED BY THE CONTRACTOR SHALL BE RESTORED WITH 4" OF TOPSOIL AND SOD PER THE SPECIFICATIONS.
3. PROTECT/RESTORE ALL LANDSCAPING AND SURFACE FEATURES TO EXISTING CONDITION OR BETTER.
4. GRADE SITE TO UNIFORM SLOPE AROUND NEW UTILITY BOXES. PROVIDE 30" OF CLEAR LEVEL SPACE IN FRONT OF NEW CONTROL PANNEL(S).
5. PRIOR TO COMMENCING CONSTRUCTION, THE CONTRACTOR SHALL COORDINATE WITH THE DISTRICT AND THE PROPERTY OWNERS REGARDING THE REMOVAL AND RESTORATION OF EXISTING LANDSCAPE FEATURES.

RESTORATION NOTES

1. RESTORE BEACH SAND TO EXISTING CONDITION. ANY IMPORTED SAND SHALL MATCH THE COLOR AND GRADATION OF THE EXISTING SAND.
2. RESTORE WALL TO EXISTING CONDITION.
3. RESTORE EXISTING LANDSCAPING, TOPSOIL, AND SOD AS APPLICABLE TO PRE-CONSTRUCTION CONDITIONS, OR BETTER.
4. RELOCATE EXISTING ROCKERY AS SHOWN TO ACCOMMODATE NEW FACILITIES.
5. INSTALL RIVER ROCK TO 3" DEPTH. ANY IMPORTED MATERIAL SHALL MATCH THE EXISTING RIVER ROCK.
6. INSTALL ROOT BARRIER BETWEEN NEW PLANTS AND ALL UTILITIES AS SHOWN AND AS DIRECTED BY THE CONTRACTING AGENCY. ROOT BARRIERS SHALL BE "DEEP ROOT" MODEL NO. UB 36-2 OR APPROVED EQUAL.

PLANT SCHEDULE

PLANT SYMBOL	COMMON NAME/ BOTANICAL NAME	MINIMUM SIZE	NO. OF PLANTS
	PORTUGUESE LAUREL/ PRUNUS LUSITANICA	5 GAL	3

ERIC B. DELPEL — STATE OF WASHINGTON — 40195 — REGISTERED PROFESSIONAL ENGINEER
3/8/2023

NO	BY	APPD	REVISION	DATE

PERMIT SET - NOT FOR CONSTRUCTION

WARNING
0 ½ 1
IF THIS BAR DOES NOT MEASURE 1" THEN DRAWING IS NOT TO SCALE

Gray & Osborne, Inc. CONSULTING ENGINEERS

DESIGNED BY	HLT
DRAWN BY	HLT
CHECKED BY	EBD
APPROVAL	EBD
DATE	MAR 2023

NORTHSHORE UTILITY DISTRICT — WATER SEWER

NORTHSHORE UTILITY DISTRICT
6830 NE 185th St. Kenmore, WA 98028-2684
P.O. Box 82489 Kenmore, WA 98028-2684
Ph: (425) 398-4400 | Fax: (425) 398-4430 | www.nud.net

CONTRACT 2022-01
GRINDER PUMP STATIONS 1-4 REPLACEMENT

GRINDER PUMP STATION 4 RESTORATION PLAN

BASE MAP H4
C2003
SHEET 24 *OF* 30

APPENDIX E:
Variance Criteria Response

Washington State Variance Criteria

WAC 173-27-170 - Review criteria for variance permits

2. **Variance permits for development and/or uses that will be located landward of the ordinary high water mark (OHWM), as defined in RCW 90.58.030 (2)(c), and/or landward of any wetland as defined in RCW 90.58.030 (2)(h), may be authorized provided the applicant can demonstrate all of the following:**

   a. *That the strict application of the bulk, dimensional or performance standards set forth in the applicable master program precludes, or significantly interferes with, reasonable use of the property;*

   The bulk standard requirement of a setback of 200 feet from the ordinary high water mark of Lake Washington encompasses the area on the subject parcel where utility improvements are proposed. The Kirkland Shoreline Master Program (SMP) specifically excludes application of Kirkland Zoning Code (KZC) 90.35 – Exemptions – to areas within shoreline jurisdiction under KZC 83.490.4.

   This project consists of replacement of existing components of a sewage facility known as Grinder Pump Station 4 which is owned and operated by the Northshore Utility District for the transmission of sanitary sewer flows from the developed area zoned for such use. The original station was constructed in 1979 and connects to an extensive network of existing utility infrastructure, much of which is within shoreline. The proposed project will maintain the existing station's function and restore its operability so as to continue to provide sewer service to the area. Relocating the station outside of the 200-foot shoreline designation would require extensive relocation of connector pipelines which could disrupt the wastewater collection service and additional shoreline designation areas. Given the need for the improvements to occur in order to connect to the existing infrastructure, development on the proposed site provides an option that would exceed the setback standard. However, the application of minimization and mitigation measures will allow a reasonable use of the property while avoiding shoreline impact to the maximum amount possible.

   b. *That the hardship described in (a) of this subsection is specifically related to the property, and is the result of unique conditions such as irregular lot shape, size, or natural features and the application of the master program, and not, for example, from deed restrictions or the applicant's own actions;*

   The hardship described above (a) is specifically related to the existing facility in need of the maintenance and repair within the shoreline jurisdiction of Lake Washington, in addition to the buffers of a stream and two wetlands. Application

of the standards in the SMP (KZC 83) does not allow for the proposed maintenance and repair of a public utility. However, the existing Grinder Pump Station 4 cannot be relocated, as it was installed at its current location when the area was developed and there is no alternative to this project that would free it from the standards set forth. The existing sewer system, including multiple properties in the area, consists of a gravity sewer pipes that lead to Grinder Pump Station 4 which pumps to the sewer system up the hill. Any effort to relocate the existing facilities to outside critical areas is not feasible due to the existing topography of the area. Regardless of feasibility, relocating the existing facilities would require significantly more excavation and construction activities encompassing a much larger area within the same critical areas in order to reroute the existing infrastructure to the new location, thus interfering with the reasonable use of the existing properties.

c. *That the design of the project is compatible with other authorized uses within the area and with uses planned for the area under the comprehensive plan and shoreline master program and will not cause adverse impacts to the shoreline environment;*

The design of the project is compatible with other authorized uses within the area and within uses planned for the area under the City of Kirkland Comprehensive Plan and the SMP. The city's Land Use Map (December 2021) identifies the land use on the parcel for the proposed project as Low Density Residential. The existing Grinder Pump Station 4 was installed at its current location when the area was developed as residential. Granting the variance to retrofit the existing utilities will not change the residential nature of the area, and therefore, would not adversely affect the uses planned for the area.

The proposed project has been designed to repair and maintain the existing sewer facilities with the least possible impact to the shoreline environment. Most of the components to this project will simply replace equipment that is failing and needs replacement to maintain function of the station, while the addition of the valve box will help to prevent accelerated deterioration of valves and piping in the future and improve the ease of operations. The proposed project will maintain the existing sewerage facilities to prevent potential environmental damage resulting from failed infrastructure, as well as retrofitting the facilities to comply with current code and regulatory requirements that were not enacted at the time of the original construction of the grinder pump station. All other alternatives, including taking no action, could adversely impact the shoreline environment.

The project will result in 21 square feet of unavoidable permanent impacts within the overlapping shoreline jurisdiction and buffer of Wetland B and Stream A, located on site. Additionally, approximately 214 square feet of temporary impacts will occur during construction. The project has a limited footprint that was determined based on topography of the site and the existing easement location. All impacts will be fully contained within the existing utility easement and will

occur landward of the OHWM of Lake Washington and Stream A. Temporary erosion and sediment control (TESC) devices will be implemented to ensure sediment does not mobilize beyond the work area.

Onsite compensatory mitigation is not possible because the project is contained within a utility easement and compensatory buffer enhancement plantings cannot be installed on privately owned parcels. Therefore, to mitigate the 21 square feet of permanent buffer impacts and ensure no net loss of ecological function, buffer credits will be purchased from the Keller Farm Mitigation Bank (KFMB), which is located within the same service area. A quantity of 0.0023 credits will be purchased from KFMB to offset the proposed impacts. 0.0023 credit equates to approximately 330 square feet, exceeding the 21 square feet of permanent buffer impacts associated with the project and providing mitigation at a ratio greater than 15:1. The 214 square feet of temporary buffer impacts will be fully restored to their original condition or enhanced where possible following construction.

d. *That the variance will not constitute a grant of special privilege not enjoyed by the other properties in the area;*

Variance for this project would not constitute a grant of special privilege because the project consists of repair and maintenance of existing public sewer facilities, which provides the conveyance of sewer flows from the developed land in this area zoned for such use. The proposed project is for the sole benefit to the public such that providing repair and maintenance of the existing facilities is necessary for the continued operation of the existing grinder pump station which provides sewer service to the area. This project is essential for the Northshore Utility District to continue to provide transmission of sewer flows from the served area.

The unique nature of this project, including the essential service it provides to the public, along with the lack of feasible alternatives, precludes this project from constituting a grant of special privileges inconsistent with the general rights allowed to other property in the same area and zone. Failure to complete construction of the proposed project would be disproportionally detrimental to the properties relying on the functionality of this facility for sewer service; therefore, granting of the variance would not only not constitute a grant of special privilege enjoyed by other properties in the area, but it would prevent the incursion of rights for the properties served by facilities subject to this project.

e. *That the variance requested is the minimum necessary to afford relief; and*

The proposed project will repair and maintain the existing sewer facilities with the minimum possible impact to the environment. As previously noted, the proposed project will primarily replace failing equipment to maintain the station's function, and the addition of a valve box will help to prevent accelerated deterioration of valves and piping in the future and improve operations. All other alternatives, including taking no action, would cause significantly more impacts to the

environment and negatively affect public interests. Relocation of the station would require much more excavation and construction activities within the critical areas and performing no improvements could result in sewer spills to the environment as well as the inability for the District to continue providing the required sewer service to the developed area. The proposed improvements to the existing facilities have been planned with the absolute minimum impact to all facets of public and environmental concerns possible.

f. That the public interest will suffer no substantial detrimental effect.

The proposed improvements to the station are essential to the transmission of sewer flows from the served area and will not cause substantial detrimental effects to the environment or the interests of the public. It is the sole purpose of the proposed maintenance of the existing sewer facilities to prevent the possible environmental impact of a sewer spill and risk to public health caused by not properly maintaining the facility. Alternatives including relocating the facilities would cause significant detriment to the public through substantially more excavation and construction activities leading to the disruption of daily life and severe impacts on critical areas. Failure to perform the proposed work to maintain the existing sewer facilities could lead to sewer backups, which would cause environmental damage and public health issues, therefore adversely affecting the public interest. For the reasons aforementioned, the sole purpose of the proposed project is to prevent detriment to public interest; therefore, the public interest will suffer no detrimental effect by the granting of the variance.