ATTACHMENT C

Existing Parking Demand Data

Finn Hill Middle School Addition
Parking Data Summary
TENW Project No. 2022-174

WEEKDAY PARKING DEMAND

		Number of Occupied Stalls Observed											
		Thursday 5/12/22				Tuesday 5/17/22				Thursday 5/19/22			
		9:00 AM		2:00 PM		9:30 AM		2:25 PM		9:00 AM		2:00 PM	
Type of Parking Stall	**Number of Available Stalls**	**Number**	**Percent Occupied**	**Number**	**Percent Occupied**	**Number**	**Percent Occupied**	**Number**	**Percent Occupied**	**Number**	**Percent Occupied**	**Number**	**Percent Occupied**
Area #1 (Main Lot)													
ADA	4	1	25%	1	25%	1	25%	1	25%	2	50%	2	50%
57	9	2	22%	2	22%	2	22%	2	22%	2	22%	1	11%
General	49	48	98%	47	96%	49	100%	45	92%	46	94%	49	100%
Area #2 (Bus Loop)													
General	-	0	-	0	-	0	-	1	-	0	-	0	-
ON-SITE TOTAL	**62**	**51**		**50**		**52**		**49**		**50**		**52**	
ON-SITE PERCENT OCCUPIED		**82%**		**81%**		**84%**		**79%**		**81%**		**84%**	
On-Street Parking													
NE 132nd Street	-	10		8		6		5		7		6	
ON-STREET (OFF-SITE) TOTAL	**-**	**10**		**8**		**6**		**5**		**7**		**6**	
TOTAL PARKING DEMAND		**61**		**58**		**58**		**54**		**57**		**58**	

ATTACHMENT D

ITE Parking Parking Generation Manual, 5th edition

Land Use Code 522

Middle School/Junior High School (522)

Peak Period Parking Demand vs: Students
On a: Weekday (Monday - Friday)
Setting/Location: General Urban/Suburban
Peak Period of Parking Demand: 10:00 a.m. - 2:00 p.m.
Number of Studies: 4
Avg. Num. of Students: 845

Peak Period Parking Demand per Student

Average Rate	Range of Rates	33rd / 85th Percentile	95% Confidence Interval	Standard Deviation (Coeff. of Variation)
0.09	0.07 - 0.12	0.08 / 0.12	***	0.02 (22%)

Data Plot and Equation

Caution – Small Sample Size

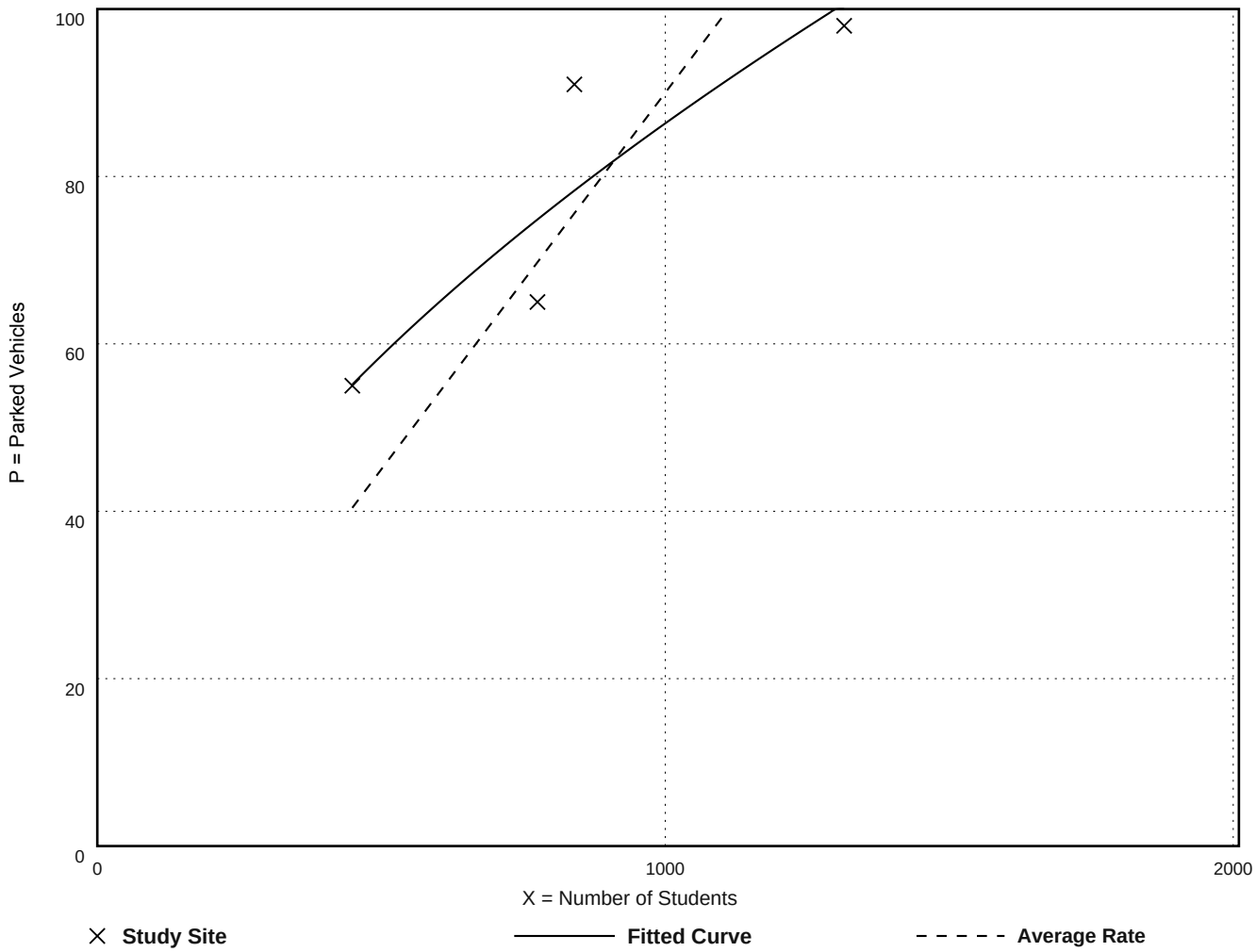

Fitted Curve Equation: Ln(P) = 0.56 Ln(X) + 0.59

R^2= 0.81

ATTACHMENT E

Future Parking Demand Calculations

Finn Hill Middle School Addition
Parking Data Summary
TENW Project No. 2022-174

WEEKDAY PARKING DEMAND SUMMARY

Existing Weekday Parking Demand

	Parking Demand Observed (vehicles)	
Day	**~9:00 AM**	**~2:00 PM**
Thursday 5/12/22	61	58
Tuesday 5/17/22	58	54
Thursday 5/19/22	57	58
3-day average	58	

Existing Weekday Parking Demand Rates per Student

	Maximum Peak Observed (occupied stalls)	Number of Students[1]	Peak Parking Demand Rate (stalls/student)
Max Parking Demand	61	672	0.09

Future (with Addition Project) Weekday Parking Demand Estimates per Student (based on 835 students)

	Peak Parking Demand Rate (stalls/student)	Future Student Enrollment[2]	Projected Future Peak Parking Demand (stalls)	Existing Parking Supply	Parking Surplus or Deficit (stalls)
Max Parking Demand	0.09	835	76	62	-14

Future (with Addition Project) Weekday Parking Demand Estimates per Student (based on 872 students)

	Peak Parking Demand Rate (stalls/student)	Future Student Enrollment[3]	Projected Future Peak Parking Demand (stalls)	Existing Parking Supply	Parking Surplus or Deficit (stalls)
Max Parking Demand	0.09	872	79	62	-17

Notes:

1) Number of students provided by LWSD on 5/13/22.

2) Total future capacity with Addition (+200 students) per LWSD.

3) Total future capacity based on existing enrollment (672 students) plus addition capacity (200 students).

CITY OF KIRKLAND
Department of Public Works
123 Fifth Avenue, Kirkland, WA 98033
425.587.3800 - www.kirklandwa.gov

MEMORANDUM

Date: May 30, 2023

To: Tony Leavitt, Senior Planner

From: Rochelle Starrett, Transportation Engineer

File No.: ZON22-00796

Subject: **Finn Hill Middle School Addition Parking Study and On-Site Circulation Review**

INTRODUCTION

This memo summarizes my review of the parking study prepared for the Finn Hill Middle School Addition project pursuant to Kirkland Zoning Code (KZC) 105.25 and my review of the transportation impact analysis which evaluated the impacts of the project to the existing on-site vehicle circulation and loading area pursuant to KZC 15.40.130. I have received and reviewed the following documents:

- Updated Parking Analysis for Finn Hill Middle School Addition prepared by TENW dated May 24, 2023
- Updated Transportation Impact Analysis for Finn Hill Middle School Addition prepared by TENW dated May 11, 2023

This review is required because the KZC requires the applicant to provide a parking demand study to determine the appropriate amount of parking for this land use rather than providing a general rate. The purpose of my review is to analyze the applicant's peak parking demand study and provide recommendations based on the criteria found in KZC 105.25. This review is also required to ensure that the existing on-site circulation and loading area is adequate with the addition project to minimize the impacts to nearby residential uses pursuant to KZC 15.40.130.

PROJECT DESCRIPTION

The subject property is located at 8040 NE 132nd Street (Parcel #2426049128). The applicant is proposing to construct an 8-classroom addition at the existing Finn Hill Middle School site which would increase the capacity of the school by up to 200 students. With the addition project, Finn Hill Middle School would have a maximum capacity of 835 students and is expected to employ 68 to 72 staff. The existing vehicle access to the site will remain the same with the addition project.

PREPARED STUDIES

Parking Analysis

KZC Section 105.25 allows an applicant to propose the number of parking spaces required in cases where the KZC does not specify a parking space requirement for a particular use based on a parking study prepared by a licensed Transportation Engineer. The scope of the study shall be proposed by the Transportation Engineer and approved by the City's Transportation Engineer. The study shall provide at least two days of data for morning, afternoon and evening hours, or as otherwise approved or required by the City's Transportation Engineer.

The applicant's parking study evaluated parking demand at the existing Finn Hill Middle School site and along the project frontage to capture the unique characteristics of this site which may influence parking demand. Parking demand was evaluated at the site for three weekdays in May 2022 around 9:00 AM (after peak morning drop-off) and around 2:00 PM (before peak afternoon pick-up). The evaluated parking demand periods represent the parking demand during typical school operations, and as noted in the transportation impact analysis prepared for this project, Finn Hill Middle School was operating fully in-person at the time of this study.

Transportation Impact Analysis

The applicant's transportation impact analysis was prepared in accordance with City of Kirkland Policy R-38: Transportation Impact Analysis Review. Traffic counts were collected at the site access driveways for two days in May 2022 during the AM (8-9 AM, consistent with an 8:35 AM school start time), afternoon (2:30-3:30 PM, consistent with a 3:05 PM school dismissal time), and PM peak (4-6 PM). The collected traffic counts were used to develop site trip generation and traffic volumes for existing, future baseline, and future with project conditions which were used to prepare the level of service and vehicle queueing analysis for the site access driveways. The selected evaluation periods represent typical peak pick-up and drop-off periods at Finn Hill Middle School since the school was operating fully in-person at the time of the study.

ANALYSIS

Parking Analysis

The parking demand measured at the site represents typical operating characteristics for Finn Hill Middle School. Middle school parking demand includes both employee and visitor parking demand. Employees are typically parked on site for the duration of the school day while visitor traffic may be more variable throughout the day. School events, sports practices, or meetings may all contribute to evening parking demand, however, these events are typically infrequent or are expected to have lower overall parking demand since they may only affect a portion of the students attending Finn Hill Middle School. Therefore, it is reasonable that the typical peak parking demand for the Finn Hill Middle School site occurs during the day. Furthermore, the applicant evaluated parking demand once in the morning after the peak drop-off period and once in the afternoon prior to the peak pick-up period for three days. The time periods selected by the applicant correspond to periods when Finn Hill Middle School was in session with fully in-person classes, and therefore, the parking demand represents typical peak parking demand for the site.

The observed parking demand included both vehicles parked on-site within the existing Finn Hill Middle School parking lot and vehicles parked within the existing, legal on-street parking along the school frontage on NE 132nd Street. Counting vehicles parked on-street along the NE 132nd Street frontage is appropriate since the general parking supply within the main parking lot was more than 90% occupied during each data collection period. The high utilization of on-site parking indicates that there may be spillover parking at the existing site. Although a single count cannot confirm that a vehicle parked within the existing on-street parking is associated with Finn Hill Middle School, the on-street parking directly fronts the school site and likely has limited utility for adjacent residential uses during the day. Therefore, it is appropriate to assume that the observed

parked vehicles within the existing on-street parking is associated with Finn Hill Middle School to provide a more conservative estimate of the existing parking demand rate for the site.

Lake Washington School District's Environmental and Adventure School is also located on the northeast corner of the existing Finn Hill Middle School site. While these two schools share a common campus, the schools have separate primary accesses; Finn Hill Middle School is accessed from NE 132nd Street while the Environmental and Adventure School is accessed from 84th Avenue NE. Based on coordination with Lake Washington School District, the 6 on-site parking spaces in the northeastern portion of the site are used by Environmental and Adventure School staff only, so these spaces were not considered as part of Finn Hill Middle School's parking supply or demand. Similarly, vehicles parked within the existing, legal on-street parking along the school frontage on 84th Avenue NE are likely associated with the parking demand for the Environmental and Adventure School since this parking area is closer to the main site access for the Environmental and Adventure School. Therefore, parked vehicles observed on this frontage should not be counted as part of the parking demand for Finn Hill Middle School.

The applicant recorded a peak parking demand of 61 vehicles and a three-day average weekday peak parking demand of 58 vehicles. Based on the enrollment of 672 students at the time of the study, the peak parking demand corresponds to a parking rate of 0.09 spaces per student. As noted in the applicant's parking study, the peak parking demand rate for Finn Hill Middle School is consistent with the range of 0.07 to 0.12 spaces per student identified in the Institute of Transportation Engineer's Parking Generation Manual.

The future maximum student capacity of Finn Hill Middle School is 835 students which would correspond to a future peak parking demand of 76 parking spaces (0.09 spaces per student x 835 students). If the addition project creates space for 200 additional students, then 3 additional parking spaces would be required on-site to accommodate the additional parking demand (0.09 spaces per student x 872 students [672 current students + 200 additional students]).

Increasing the parking supply on-site to 76 spaces would meet the projected parking demand based on the future maximum capacity and accommodate most of the 68 to 72 staff expected at the site once the addition project is completed. Currently, Finn Hill Middle School has a total of 62 on-site parking stalls in one lot. The existing parking supply includes 4 ADA stalls, 49 general purpose stalls, and 9 general purpose stalls along the eastern curb in the main parking lot which restrict parking from 8-9 AM and 2:30-3:30 PM for pick-up and drop-off. Note that since staff are required to be on-site prior to 8:30 AM and after 3:05 PM, the time restricted spaces are not available for staff parking. As part of the addition project, Lake Washington School District will construct 14 new staff parking spaces at Finn Hill Middle School for a total of 76 parking spaces on site. Today, 82% of staff may park on the existing site (49 general purpose spaces / 60 staff), while the proposed addition project will accommodate 88% of staff on site (63 general purpose spaces / 72 staff). Visitor parking will continue to be provided through the 9 general purpose stalls along the eastern curb which are restricted during peak drop-off and pick-up.

On-Site Circulation Analysis

The Finn Hill Middle School site currently has three driveways. The primary site access is located off NE 132nd Street, across from 82nd Avenue NE, which provides access to the school's parking lot and pick-up and drop-off area for parents. A separate bus-only driveway is located to the east of the primary site access on NE 132nd Street, and access to the Environmental and Adventure School is located off 84th Avenue NE. Finn Hill Middle School revised their on-site circulation in September 2022 to reduce existing congestion due to pick-up and drop-off activities during the AM and afternoon school peaks. Under the revised circulation pattern, parents enter the site using the primary vehicle access off NE 132nd Street, circulate through the parking lot to the pick-up and drop-off area, and exit the site to 84th Avenue NE using the on-site fire lane. The revised circulation pattern is expected to remain in place after this project is complete.

The volumes used in the transportation impact analysis represent typical existing and projected future volumes for Finn Hill Middle School. At the time counts were collected in May 2022, parent pick-up and drop-off activity exclusively used the primary vehicle access located off NE 132nd Street. Future traffic volumes were manually adjusted to reflect the revised circulation and any related shift in travel behavior. The projected future traffic volumes at Finn Hill Middle School with the addition project were used to evaluate level of service and vehicle queues at the existing site access driveways during the AM, afternoon, and PM peak periods.

Based on this analysis, the primary site access driveways on NE 132nd Street and 84th Avenue NE are expected to operate at LOS C or better during the AM, afternoon, and PM peak hours with the proposed Finn Hill Middle School addition project. The bus-only driveway is expected to operate at LOS D under 2024 baseline conditions and at LOS E with the Finn Hill Middle School addition project during the AM peak hour. During the afternoon and PM peak hours, the bus-only driveway is expected to operate at LOS C or better. The delay experienced at the bus-only driveway during the AM peak hour affects exiting bus traffic, and therefore, does not represent a significant impact to the surrounding neighborhood.

The projected 95th percentile vehicle queues for the eastbound approach at 84th Avenue NE/site access driveway will increase from 75 feet (3 vehicles) under the 2024 baseline conditions to 175 feet (7 vehicles) with the proposed addition project during the AM peak hour. Although the vehicle queues are projected to double with the addition, there is sufficient storage on-site to accommodate queues generated by exiting traffic without significant spill back towards the pick-up and drop-off area for Finn Hill Middle School. The 95th percentile queue will exceed the available storage (approximately 150 feet) between 84th Avenue NE and the entrance to the Environmental and Adventure School pick-up and drop-off area although average vehicle queues are expected to be shorter. Widening the existing driveway to provide separate left and right turn lanes for traffic exiting the site to 84th Avenue NE would help to mitigate the projected vehicle queues by allowing right turning traffic to bypass stopped, left turning traffic. This improvement would reduce the likelihood that the increased pick-up and drop-off traffic would negatively impact on-site circulation for the Environmental and Adventure School which could potentially impact traffic on 84th Avenue NE and surrounding residences. Otherwise, 95th percentile vehicle queues for traffic entering and exiting the site access driveways are expected to be short (50 feet / 2 vehicles or less) during the AM, afternoon, and PM peak hours in 2024 with the proposed Finn Hill Middle School project. Note that parents may still elect to utilize the existing on-street parking along the school frontage on NE 132nd Street to pick-up and drop-off students which is not expected to create a significant impact for adjacent residents.

FINDINGS

The measured peak parking demand rate for Finn Hill Middle School is 0.09 spaces per student. The future capacity of 835 students is expected to generate demand for a total of 76 parking spaces during typical school operations. As part of the addition project, Finn Hill Middle School will add 14 parking spaces for a total future parking supply of 76 spaces. Parking along the school frontage will remain available in the future for additional school-related parking.

The primary site access driveways are expected to operate at LOS C or better in 2024 with the proposed addition project. The bus-only driveway is expected to operate at LOS E during the AM peak hour with the proposed addition project although this condition only impacts a small number of buses exiting the site. 95th percentile vehicle queues at the site access driveways are expected to be 50 feet (2 vehicles) or less in 2024 with the proposed addition project except for the main site exit at 84th Avenue NE where queues are expected to be 175 feet (7 vehicles) in the AM peak which can be accommodated on-site. The projected vehicle queues could impact on-site circulation for the Environmental and Adventure School pick-up and drop-off loop.

RECOMMENDATIONS

I recommend establishing a parking rate of 0.09 spaces per student for the Finn Hill Middle School site. Based on the projected future student capacity, 76 parking spaces will be required to serve this use and the future Finn Hill Middle School site will provide 76 parking spaces on-site to meet the future demand. On-street parking along the school frontage on NE 132nd Street may also be used to supplement the existing parking supply at the school site. Future enrollment at Finn Hill Middle School shall be capped at 835 students unless additional parking is provided.

I also recommend widening the driveway on 84th Avenue NE to provide separate left and right turn lanes for exiting traffic. A wider driveway will allow right-turning traffic to bypass stopped, left-turning traffic to help reduce on-site vehicle queues during peak pick-up and drop-off periods. This improvement will mitigate on-site impacts to circulation for the Environmental and Adventure School.

Finn Hill Middle School (FHMS) Addition

Kirkland, WA

Updated Transportation Impact Analysis

May 11, 2023

Prepared for:

Lake Washington School District No. 414
Support Services Center
15212 NE 95th Street
Redmond, WA 98052

Prepared by:

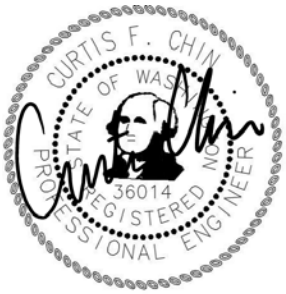

5/24/2023

TENW

Transportation Engineering NorthWest

11400 SE 8th Street, Suite 200
Bellevue, WA 98004
(425) 889-6747

Table of Contents

Appendices

List of Figures and Tables

EXECUTIVE SUMMARY

This updated transportation impact analysis (TIA) has been prepared for the proposed 8-classroom addition to Finn Hill Middle School (FHMS) located at 8040 NE 132nd Street (King County Parcel # 2426049128) in Kirkland, Washington. This TIA has been updated to address comments received from the City of Kirkland on March 29, 2023.

Project Proposal. The existing Finn Hill Middle School serves grades 6 through 8 with an enrollment of 672 students as of May 2022. Based on information from the Lake Washington School District, the proposed project would include an addition consisting of 8 new classrooms. The proposed 8-classroom addition would increase the capacity of the school by 200 students resulting in a total future maximum capacity of 835 students. The project is planned to be completed prior to the start of school in Fall 2024.

Vehicular access to the site would remain as it currently exists with two access driveways on NE 132nd Street (one for visitors/staff and one for buses) and one access driveway on 84th Ave NE. Finn Hill Middle School recently (as of September 2022) implemented a modified vehicular circulation during the AM peak drop-off and Afternoon peak pick-up periods where vehicles enter the site via the main driveway on NE 132nd Street, circulate through the parking lot, drop-off/pick-up students on the east side of the main parking lot adjacent to the school, and exit the site via the driveway on 84th Ave NE. It is anticipated that this new vehicular circulation pattern will be maintained with the proposed addition project.

It should be noted that Finn Hill Middle School shares a campus with the LWSD Environmental and Adventure School (EAS) choice school. Primary vehicular access for EAS visitors and staff is provided via the existing driveway on 84th Ave NE.

It should also be noted that although the maximum future capacity of Finn Hill Middle School with the addition project would be 835 students, the analysis in this TIA is conservatively based on a hypothetical scenario that includes 872 students (200 students over the current enrollement). Therefore, this analysis should be considered conservative.

Trip Generation. The proposed *FHMS Addition* (+200 students) is estimated to generate 526 new weekday daily trips with 168 new weekday AM peak hour trips (86 entering, 82 exiting), 74 new weekday Afternoon peak hour trips (33 entering, 41 exiting), and 60 new weekday PM peak hour trips (29 entering, 31 exiting).

Transportation Concurrency. The City has determined the proposed project meets the City's transportation concurrency requirements and a Concurrency Test Notice was issued on November 9, 2022.

Intersection Operations. An analysis was conducted at 2 off-site study intersections and 3 site access intersections:

1) Juanita Drive NE / NE 132nd Street
2) 84th Ave NE / NE 132nd Street

A) NE 132nd Street / 82nd Ave NE / FHMS Main Site Access
B) NE 132nd Street / FHMS Bus Access
C) 84th Ave NE / Site Access

The results of the analysis shows that all study intersections and site access driveways are anticipated to operate at LOS D or better in 2024 with the proposed project during the AM peak hour, afternoon peak hour, and PM peak hour with two exceptions; the 84th Ave NE/NE 132nd Street all-way stop intersection is anticipated to operate at LOS E with the proposed project during the weekday AM peak hour and the FHMS East site access (bus) driveway on NE 132nd Street is anticipated to operate at LOS D without the project and LOS E with the project during the weekday AM peak hour. It should be noted that the LOS E condition only impacts 8 exiting buses during the AM peak hour.

Queuing Analysis. A future year weekday peak hour queuing analysis was conducted at two study intersections and the site access driveways for future year 2024 No Action (without project) and with-project conditions. The 95th percentile queues during the AM, afternoon, and PM peak hours at the study intersections closest to Finn Hill Middle School are anticipated to be accommodated within the existing storage.

Additionally, the 95th percentile queues during the AM, afternoon, and PM peak hours at the FHMS site access driveways are anticipated to be 50 feet (2 vehicles) or less without and with the project in 2024 with exception to the exiting (eastbound) approach at the site access driveway on NE 84th Street during the AM peak hour which is anticipated to be 75 feet without the project and 175 feet with the project and would be accommodated within the existing on-site storage.

Vehicular Access and Circulation. The increase in AM and Afternoon peak period traffic volumes as a result of the *FHMS Addition* project is anticipated to be accommodated within the new circulation pattern on-site and therefore not result in additional significant adverse impacts to existing driveways located within 150 feet of the FHMS main access on NE 132nd Street or the FHMS access on 84th Ave NE.

Non-Motorized and Transit Impacts. The proposed project is anticipated to generate some additional pedestrian and bicycle trips. It is anticipated that the existing pedestrian and bicycle facilities in the project vicinity would be adequate to accommodate any additional pedestrian and bicycle trips generated by the proposed project. Additionally, impacts to the existing public transit services in the vicinity as a result of the proposed project are not expected.

Parking Analysis. The parking analysis for the *FHMS Addition* project is documented under a separate memorandum.

Mitigation

Concurrency. The project was evaluated for transportation concurrency by the City of Kirkland in November 2022. Based on the results, the City has determined the projects meets the City's transportation concurrency requirements. Therefore, no short-term transportation mitigation is anticipated to be required to obtain concurrency in the City of Kirkland.

SEPA Improvements. Based on the results of the LOS analysis and the proportional share calculations at the study intersections, the installation of improvements under SEPA is not required.

Transportation Impact Fees. Transportation mitigation required by the City of Kirkland is payment of an impact fee based on the project's proposed land use. The currently adopted transportation impact fee is $479.04 per middle school student as of January 1, 2023. The cost per trip is subject to change and final impact fee calculations will be conducted at the time of building permit issuance.

INTRODUCTION

This updated transportation impact analysis (TIA) has been prepared for the proposed addition to Finn Hill Middle School (FHMS) located at 8040 NE 132nd Street (King County Parcel # 2426049128) in Kirkland, Washington. A vicinity map showing the location of the site and the surrounding area is included in Figure 1. This TIA has been updated to address comments received from the City of Kirkland on March 29, 2023.

Project Description

The existing Finn Hill Middle School serves grades 6 through 8 with an enrollment of 672 students (as of May 2022). Based on information from the Lake Washington School District, the proposed project would include an addition consisting of 8 new classrooms. The proposed 8-classroom addition would increase the capacity of the school by 200 students resulting in a total future maximum capacity of 835 students. The project is planned to be completed prior to the start of school in Fall 2024. A preliminary site plan is included in Appendix A.

Vehicular access to the site would remain as it currently exists with two access driveways on NE 132nd Street (one for visitors/staff and one for buses) and one access driveway on 84th Ave NE. Finn Hill Middle School recently (as of September 2022) implemented a modified vehicular circulation during the AM peak drop-off and Afternoon peak pick-up periods where vehicles enter the site via the main driveway on NE 132nd Street, circulate through the parking lot, drop-off/pick-up students on the east side of the main parking lot adjacent to the school, and exit the site via the driveway on 84th Ave NE. It is anticipated that this new vehicular circulation pattern will be maintained with the proposed addition project.

It should be noted that Finn Hill Middle School shares a campus with the LWSD Environmental and Adventure School (EAS) choice school and primary vehicular access for EAS visitors and staff is provided via the site access driveway on 84th Ave NE.

It should also be noted that although the maximum future capacity of Finn Hill Middle School with the addition project would be 835 students, the analysis in this TIA is conservatively based on a hypothetical scenario that includes 872 students (200 students over the current enrollment). Therefore, this analysis should be considered conservative.

Project Approach

The report is structured in accordance with the City of Kirkland's *Policy R-38 Transportation Impact Analysis Review* (July 2022), in documenting the evaluation of traffic impacts and recommended mitigation measures. Specific scope items to be included were also discussed and confirmed by City staff. To analyze the traffic impacts from the proposed *FHMS Addition*, the following tasks were undertaken:

- Assessment of existing conditions through field reconnaissance and review of existing planning documents.
- Described and assessed existing transportation conditions in the area, including existing traffic volumes, level of service, crash history, public transportation, and non-motorized facilities;
- Documented the City's planned transportation improvements in the site vicinity;

- Estimated trip generation and documented trip distribution and assignment of AM, afternoon and PM peak hour project traffic through site driveways and study intersections;
- Evaluated intersection proportional shares based on City guidelines;
- Forecasted future 2024 no action and with-project traffic volumes.
- Analyzed year 2024 AM, afternoon, and PM peak hour LOS at the study intersections and site driveways.
- Analyzed year 2024 peak hour queuing at the site driveways and study intersections.
- Discussed future vehicular access and circulation.
- Discussed non-motorized and transit impacts.
- Identified mitigation to the City of Kirkland.

Primary Data and Information Sources

- City of Kirkland *Policy R-38 Transportation Impact Analysis Review*, July 2022.
- AM, afternoon, and PM peak period traffic counts, ATD, May and October 2022.
- Average Daily Traffic Volumes; source: City of Kirkland.
- *Highway Capacity Manual (HCM),* TRB, 6th Edition, 2016.
- Washington State Department of Transportation 2019-2021 crash data.
- City of Kirkland 2017-2022 crash data.
- Metro/King County Website, September 2022.
- City of Kirkland Preliminary *2023-2028 Capital Improvement Program (CIP).*
- City of Kirkland *Transportation Impact Fees,* effective January 1, 2023.

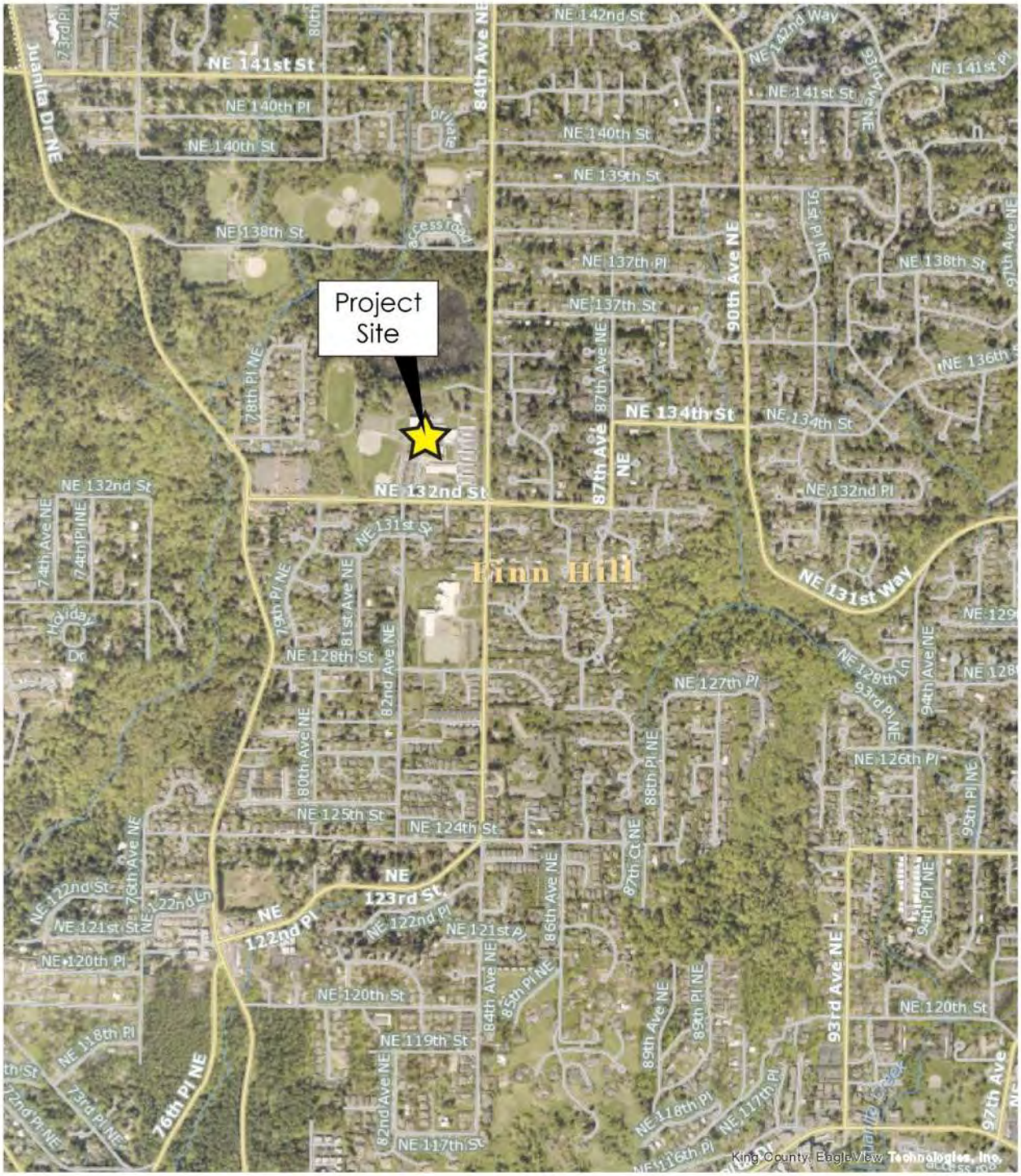

Figure 1: Site Vicinity

N
NOT TO SCALE

EXISTING CONDITIONS

This section describes existing transportation system conditions in the study area, including an inventory of existing roadways, existing traffic volumes, intersection levels of service (LOS), crash history, public transportation services, and non-motorized transportation facilities.

Roadway Network

Table 1 describes the existing characteristics of the streets that would be used as primary routes to and from the site. Roadway characteristics are described in terms of orientation, arterial classification, number of lanes, posted speed limits, parking, pedestrian facilities, and bicycle facilities. The relationship of these roadways to the project site is shown in Figure 1.

Table 1
Existing Study Area Roadway Network

Roadway	Orientation	Arterial Classification	# of Lanes	Lane Width	Posted Speed Limit (mph)	Parking / Shoulder Treatment	Sidewalks	Bicycle Facilities
NE 132nd Street	East/west	Collector Street	2	Typ[1]	25 [2]	Parking north side, intermittent paved shoulder south side	5' on north side	Yes on north side
84th Ave NE	North/south	Collector Street	2	Typ[1]	30 [2]	Parking west side, paved shoulder east side	5' on west side	Yes on west side
Juanita Drive	North/south	Minor Arterial Street	2	Typ[1]	35	No parking, Paved shared shoulder/bike lanes both sides	5' on east side (intermittent) supplemented with shared walkway	Yes on both sides

1) Typ = Typical Lane Widths (10-12').
2) Both NE 132nd Street and 84th Ave NE have school-zone signs with speed limit of 20 mph when children are present.

Existing Traffic Volumes

Year 2022 existing AM, afternoon, and PM peak period traffic volumes at the following study intersections and site access driveways were based on counts conducted by All Traffic Data in May and October 2022 as follows:

Location	Date of Turning Movement Count		
	AM Peak	Afternoon Peak	PM Peak
Off-Site Study Intersections:			
1. Juanita Drive NE / NE 132nd Street	October 6, 2022	*not studied*	May 10, 2022
2. 84th Ave NE / NE 132nd Street	May 10, 2022	May 10, 2022	May 10, 2022
Site Access Driveways:			
A. NE 132nd St / 82nd Ave NE / FHMS Main Driveway	May 12, 2022	May 12, 2022	May 10, 2022
B. NE 132nd St / FHMS Bus Driveway	May 12, 2022	May 12, 2022	May 10, 2022
C. 84th Ave NE / FHMS Site Access	May 12, 2022	May 12, 2022	May 10, 2022

At the off-site study intersection of Juanita Drive NE/NE 132nd Street, existing weekday AM peak hour traffic volumes represent the highest one-hour between 7:00 and 9:00 AM, and existing weekday PM peak hour traffic volumes represent the highest hour between 4:00 and 6:00 PM. At the off-site study intersection of 84th Ave NE/NE 132nd Street, existing weekday AM peak hour traffic volumes represent the hour between 8:00 and 9:00 AM, existing weekday afternoon peak hour traffic volumes represent the hour between 2:30 and 3:30 PM, and existing weekday PM peak hour traffic volumes represent the highest hour between 4:00 and 6:00 PM. The turning movement counts at the off-site study intersections and site access driveways are included in Appendix B.

At the site access driveways, the existing weekday AM, Afternoon, and PM peak hour traffic counts were conducted on both Tuesday, May 10, 2022 and Thursday, May 12, 2022. The AM counts were conducted from 8:00 to 9:00 AM (to reflect 8:35 AM school start time), the Afternoon counts were conducted from 2:30 to 3:30 PM (to reflect a 3:05 PM school dismissal time), and the PM peak hour traffic counts were conducted from 4:00 to 6:00 PM.

As discussed in further detail in the *Trip Generation* section of this TIA, the weekday AM peak and Afternoon peak existing traffic volumes at the FHMS site access driveways were then adjusted to be consistent with the school's peak hour trip generation from 7:45 to 8:45 AM (AM peak hour) and from 2:45 to 3:45 PM (Afternoon peak hour).

The AM peak hour, Afternoon peak hour, and PM peak hour traffic volumes at the site access driveways used in the detailed LOS analysis in this TIA were based on the day that reflected the highest peak hour trip generation for the school (Thursday, May 12 for the AM and the Afternoon peak hours and Tuesday, May 10 for the PM peak hour). The PM peak hour traffic volumes at the site access driveways also reflect the school's peak hour of trip generation from 4:15 to 5:15 PM on Tuesday, May 10. The turning movement counts at the site access driveways and detailed adjustment calculations are included in Appendix B.

The adjusted site access driveway AM peak hour (7:45 to 8:45 AM) and Afternoon peak hour (2:45 to 3:45 PM) traffic volumes were then compared to the traffic volumes at the adjacent off-site study intersections, and it was determined that no further volume adjustments were necessary since the traffic volumes were balanced between the driveways and the intersections.

It should be noted that at the time of the counts in May 2022, Finn Hill Middle School was exclusively using the main site access driveway on NE 132nd Street for drop-off and pick-up and the driveway on 84th Ave NE was exclusively used for the EAS choice school drop-off/pick-up. Additionally, at the time of the counts in May 2022, FHMS was fully in-person and remote or hybrid (part remote/part in-person) school was not offered. It should also be noted that no adjustments were applied to the existing 2022 traffic volumes at the off-site study intersections and site access driveways as a result of the COVID-19 pandemic.

Figures 2 - 4 illustrate the existing 2022 weekday AM, afternoon, and PM peak hour traffic volumes at the study intersections.

Historical average daily traffic volumes on streets in the vicinity were provided by the City of Kirkland. Table 2 summarizes the historical traffic counts on Juanita Drive, 84th Ave NE, and NE 132nd Street in the project site vicinity.

Table 2
Existing Daily Traffic Volumes

Count Location	2019	2017	2015	2013	2011
Juanita Drive					
North of NE 132nd Street	11,929	12,163	12,007	11,582	10,777
84th Ave NE					
North of NE 132nd Street	2,331	--	--	--	--
South of NE 132nd Street	3,509	2,859	2,703	2,967	3,174
NE 132nd Street					
East of Juanita Drive	3,012	2,185	1,894	1,814	1,934
East of 84th Ave NE	5,447	4,338	4,039	3,958	4,132

Source: City of Kirkland Public Works Department

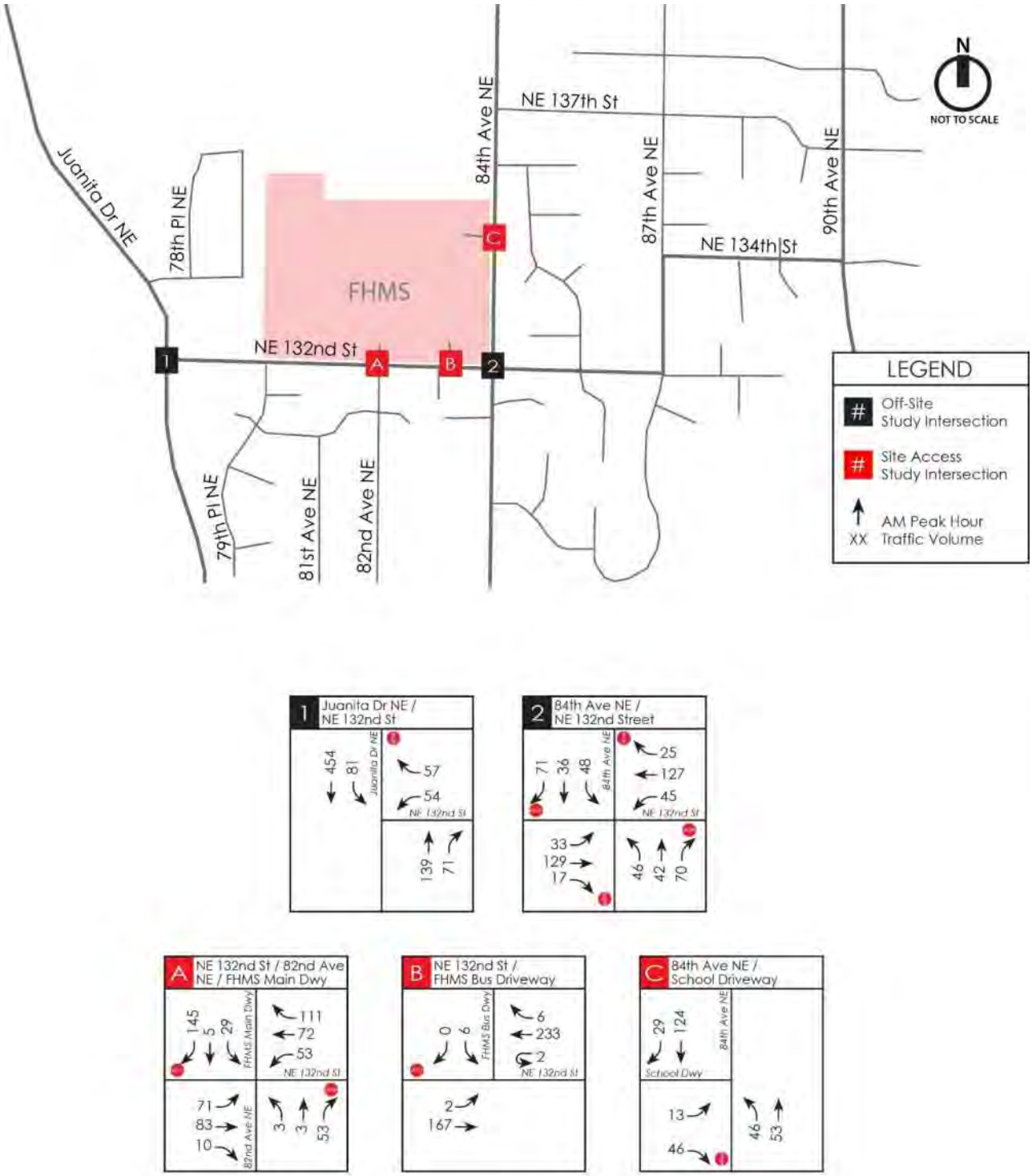

Figure 2: 2022 Existing AM Peak Hour Traffic Volumes

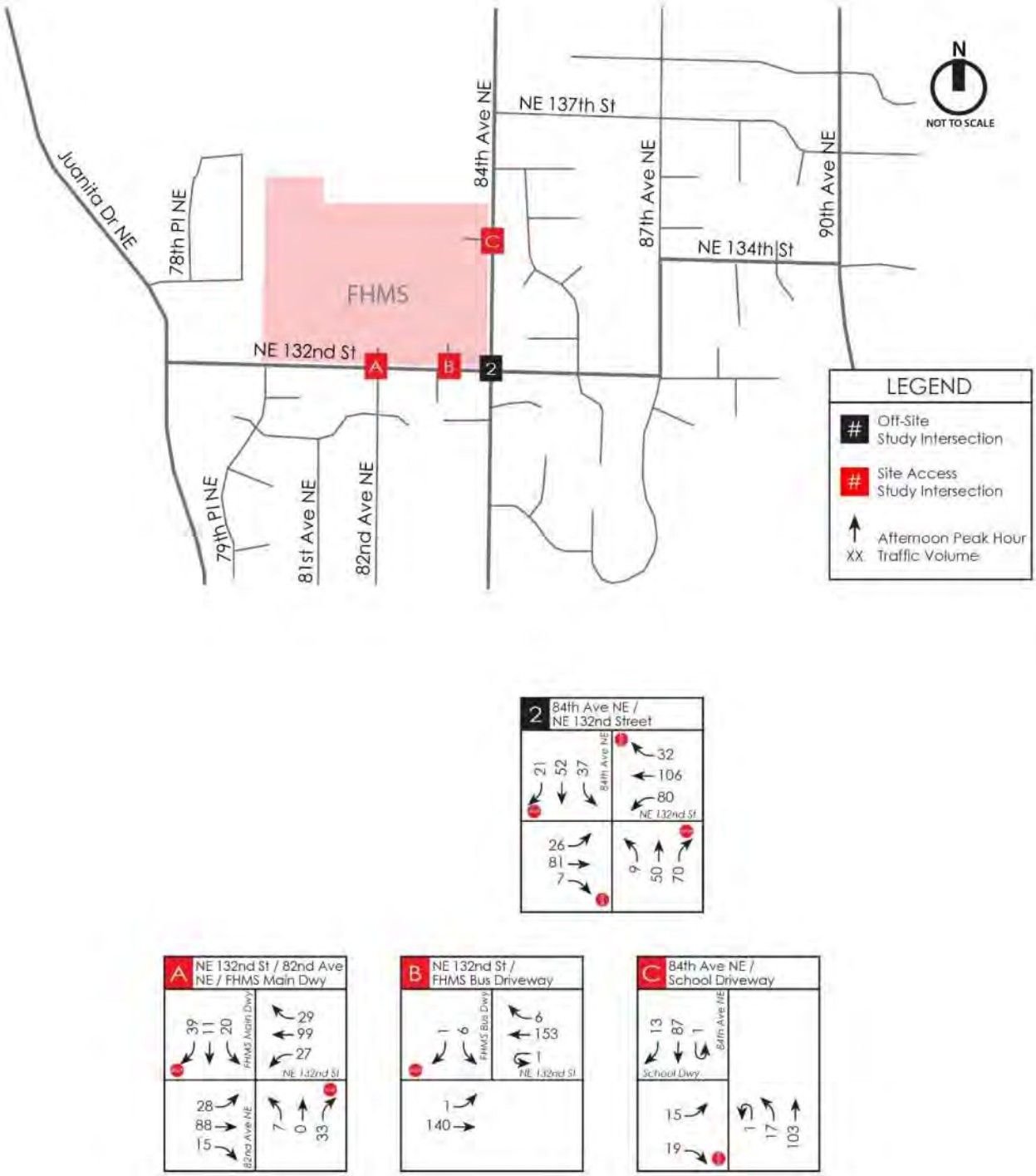

Figure 3: 2022 Existing Afternoon Peak Hour Traffic Volumes

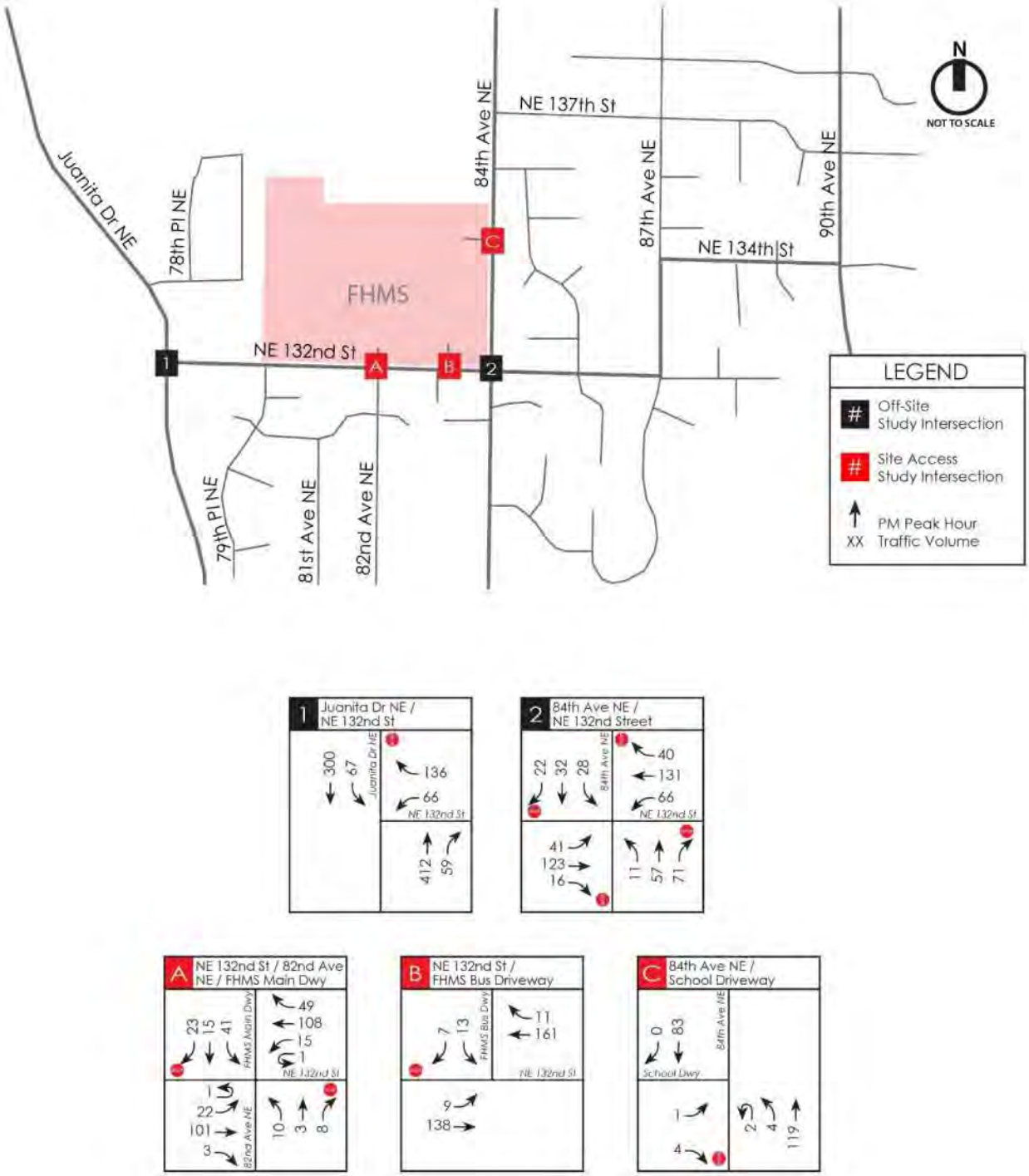

Figure 4: 2022 Existing PM Peak Hour Traffic Volumes

Crash History

Crash records at the study intersections were reviewed for the most recent three-year period from January 1, 2019 to December 31, 2021. Crash data was provided by the Washington State Department of Transportation (WSDOT). The detailed crash data is included in Appendix C. Summaries of the total and yearly average crashes are provided in Table 3 and summaries of crashes by type are provided in Table 4.

Table 3
Crash Data Summary, January 1, 2019 to December 31, 2021

	Number of Crashes				
	2019	2020	2021	Average Annual Crashes	Average Crashes / MEV[1]
Intersections:					
Juanita Dr NE / NE 132nd Street	1	1	2	1.33	0.35
82nd Ave NE / NE 132nd Street / Site Access	0	0	0	0.00	0.00
84th Ave NE / NE 132nd Street	0	2	1	1.00	0.43
Roadway Segments:					
NE 132nd St between 80th Ave NE and 84th Ave NE	0	0	0	0.00	--
84th Ave NE between NE 132nd St and NE 136th St	0	0	0	0.00	--

1) MEV = Million Entering Vehicles.
Crash data was provided by WSDOT.

Table 4
Crash Data Summary by Type, January 21, 2019 to December 31, 2021

	Crash Type							
	Angle (Left/Right)	Angle (T)	Sideswipe	Rear-end	Parked Veh / Fixed Object	Ped / Bike	Other	Three-Year Total Crashes
Intersections:								
Juanita Dr NE / NE 132nd Street	1	1	1	0	0	0	1	4
82nd Ave NE / NE 132nd St / Site Access	0	0	0	0	0	0	0	0
84th Ave NE / NE 132nd Street	3	0	0	0	0	0	0	3
Roadway Segments:								
NE 132nd St between 80th Ave NE and 84th Ave NE	0	0	0	0	0	0	0	0
84th Ave NE between NE 132nd St and NE 136th St	0	0	0	0	0	0	0	0

Source: WSDOT Crash Data.

Intersection crash rates over 1.0 crash per MEV generally warrant further review to determine if any patterns exist. Based on the most recent 3 years of crash history provided by WSDOT, there are no study intersections with a crash per MEV rate greater than 1.0. Additionally, there were no crashes

involving pedestrians or bicyclists at the study intersections or along the site frontages on NE 132nd Street and 84th Ave NE during the 3-year period from 2019 to 2021.

Also, based on a review of the crash history, there were no crashes over the most recent 3-year period at the existing site access driveways on NE 132nd Street and 84th Ave NE, and no crashes along the segment of NE 132nd Street between 80th Ave NE and 84th Ave NE and the segment of 84th Ave NE between NE 132nd Street and NE 136th Street.

Comparison to City of Kirkland Crash Data

Crash records at the study intersections were also reviewed for the most recent three-year period from January 1, 2019 to December 31, 2021 based on crash data obtained from the City of Kirkland (see Appendix C). The crash data from the City of Kirkland exactly matched the crash data from WSDOT summarized above.

In addition, crash history was specifically requested and reviewed for the intersection of 84th Ave NE/NE 132nd Street from 2017 through 2022. In addition to the following crashes included above from 2019 through 2021, the crash history in 2017, 2018, and 2022 showed the following:

- 2017 – There were a total of 3 crashes at the intersection. Two of the crashes were right angle crashes and 1 crash involved a pedestrian/pedacyclist.
- 2018 – There were 0 crashes at the intersection.
- 2022 – There was 1 crash at the intersection that was a right angle crash.

Of the 7 total crashes that occurred at the 84th Ave NE/NE 132nd Street intersection over the 6-year period from 2017 through 2022 based on crash data from the City of Kirkland, 6 out of the 7 crashes were angle crashes, but none of the 7 total crashes occurred during the peak school drop-off or pick-up periods (approximately 8 to 9 AM and 2:30 to 3:30 PM).

Public Transportation Services

King County-Metro Transit provides public transportation services in the project vicinity. Transit stops for route 225 are located on NE 132nd Street at 84th Ave NE and on 84th Ave NE at NE 136th Street.

Route 225 offers weekday and weekend service between Kenmore, the Totem Lake Transit Center, and the Redmond Technology Station. Weekday service runs from approximately 5:15 a.m. to 10:45 p.m. with approximate 30-minute headways.

Non-Motorized Transportation Facilities

Pedestrian facilities in the study area include sidewalks on the north side of NE 132nd Street along the school frontage and the west side of 84th Ave NE. At the all-way stop-controlled intersection of 84th Ave NE/NE 132nd Street located southeast of the site, marked crosswalks are located on all legs. Additionally, marked crosswalks across NE 132nd Street exist on the west leg of the intersection with 82nd Ave NE and on the east leg of the intersection with 80th Ave NE.

Designated bicycle lanes in the immediate vicinity of the project exist on the north side of NE 132nd Street and west side of 84th Ave NE.

Finn Hill Middle School also has a total of 3 ribbon-style bike racks on-site with a total capacity for 39 bikes.

Intersection Levels of Service

An existing level of service (LOS) analysis was conducted at the study intersections and existing site access driveways. LOS generally refers to the degree of congestion on a roadway or intersection. It is a measure of vehicle operating speed, travel time, travel delays, and driving comfort. A letter scale from A to F generally describes intersection LOS. At signalized intersections, LOS A represents free-flow conditions (motorists experience little or no delays), and LOS F represents forced-flow conditions where motorists experience an average delay in excess of 80 seconds per vehicle.

The LOS reported for signalized intersections, roundabouts, and all-way stop controlled intersections represents the average control delay (sec/veh) and can be reported for the overall intersection, for each approach, and for each lane group or movement (additional v/c ratio criteria apply to lane group or movement LOS only).

The LOS reported at two-way stop-controlled intersections is based on the average control delay and can be reported for each controlled minor approach, controlled minor lane group, and controlled major-street movement (additional v/c ratio criteria apply to lane group or movement LOS only).

Table 5 outlines the current HCM LOS criteria for signalized and unsignalized intersections based on these methodologies.

Table 5
LOS Criteria for Signalized and Unsignalized Intersections[1]

SIGNALIZED INTERSECTIONS			UNSIGNALIZED INTERSECTIONS		
	LOS by Volume-to Capacity (V/C) Ratio[2]			LOS by Volume-to Capacity (V/C) Ratio[3]	
Control Delay (sec/veh)	≤ 1.0	> 1.0	Control Delay (sec/veh)	≤ 1.0	> 1.0
≤ 10	A	F	≤ 10	A	F
> 10 to ≤ 20	B	F	> 10 to ≤ 15	B	F
> 20 to ≤ 35	C	F	> 15 to ≤ 25	C	F
> 35 to ≤ 55	D	F	> 25 to ≤ 35	D	F
> 55 to ≤ 80	E	F	> 35 to ≤ 50	E	F
> 80	F	F	> 50	F	F

[1] Source: Highway Capacity Manual (HCM), Transportation Research Board, 6th Edition, 2016.

[2] For approach-based and intersection-wide assessments at signals, LOS is defined solely by control delay.

[3] For two-way stop-controlled intersections, the LOS criteria apply to each lane on a given approach and to each approach on the minor street. LOS is not calculated for major-street approaches or for the intersection as a whole at two-way stop-controlled intersections. For approach-based and intersection-wide assessments at all-way stop controlled intersections and roundabouts, LOS is solely defined by control delay.

Level of service calculations for intersections were based on methodology and procedures outlined in the 6th Edition of the *Highway Capacity Manual* using *Synchro 11* traffic analysis software.

It should be noted that the 2022 existing AM peak hour, Afternoon peak hour, and PM peak hour traffic volumes showed some u-turns at the site access driveways. At the driveways where a u-turn occurred adjacent to a left-turn volume, the u-turn volume was added to the left-turn volume. Similarly, where a u-turn occurred adjacent to a thru volume (i.e. there was no left-turn volume), the u-turn volume was added to the thru volume.

The 2022 existing AM, afternoon, and PM peak hour LOS analysis results for the study intersections are summarized in Table 6. The LOS worksheets are included in Appendix D.

Table 6
2022 Existing Peak Hour Level of Service Summary

Study Intersection / Site Access Driveway	2022 Existing AM Peak Hour LOS	2022 Existing AM Peak Hour Delay (sec)	2022 Existing Afternoon Peak Hour LOS	2022 Existing Afternoon Peak Hour Delay (sec)	2022 Existing PM Peak Hour LOS	2022 Existing PM Peak Hour Delay (sec)
All-Way Stop-Controlled Intersection [1]						
2. 84th Ave NE / NE 132nd Street	B	14.4	A	9.9	A	10.0
Eastbound Approach	*B*	*14.6*	*A*	*9.6*	*A*	*9.8*
Westbound Approach	***C***	***15.7***	***B***	***10.5***	***B***	***10.5***
Northbound Approach	*B*	*13.4*	*A*	*9.4*	*A*	*9.8*
Southbound Approach	*B*	*13.5*	*A*	*9.4*	*A*	*9.3*
Side-Street Stop-Controlled Intersections						
1. Juanita Dr NE / NE 132nd Street						
Westbound Left-Turn	C	17.6	--	--	C	18.4
Westbound Right-Turn	A	9.5	--	--	B	12.6
Southbound Left-Turn	A	7.9	--	--	A	8.7
A. NE 132nd St / 82nd Ave NE / FHMS Main Dwy						
Eastbound Left-Turn	A	8.5	A	8.1	A	7.9
Westbound Left-Turn	A	7.7	A	7.5	A	7.6
Northbound Approach	B	12.0	B	10.1	B	12.1
Southbound Approach	D	29.6	B	14.3	B	14.9
B. NE 132nd Street / FHMS East (Bus) Driveway						
Eastbound Left-Turn	A	9.7	A	8.9	A	8.0
Southbound Approach	C	23.9	B	14.5	B	13.5
C. 84th Ave NE / EAS Driveway						
Northbound Left-Turn	A	8.0	A	7.7	A	7.5
Eastbound Approach	B	10.5	A	9.9	A	9.0

1) LOS and delay for all-way stop-controlled intersections are reported as a weighted average of all approaches based on HCM methodology. The LOS and delay for the individual approaches are presented for disclosure. **BOLD** = Worst approach.

As shown in Table 6, the all-way stop-controlled intersection and individual movements at the side-street stop-controlled intersections all currently operate at LOS D or better under existing conditions during the weekday AM, afternoon, and PM peak hours.

Site Access

Vehicular access to the site is currently provided via two access driveways on NE 132nd Street (one for visitors/staff and one for buses) and one access driveway on 84th Ave NE.

At the time of the existing counts in May 2022, all on-site AM peak drop-off and Afternoon peak pick-up at Finn Hill Middle School occurred via the main site access driveway on NE 132nd Street which provides access to the drop-off/pick-up loop and the on-site parking lot. Vehicular drop-off and pick-up of students was also observed to occur in legal on-street parking on NE 132nd Street, 84th Ave NE, and 82nd Ave NE.

As of September 2022, FHMS implemented a modified vehicular circulation during the AM peak drop-off and Afternoon peak pick-up periods where vehicles enter the site via the main driveway on NE 132nd Street, circulate through the parking lot, drop-off/pick-up students on the east side of the main parking lot adjacent to the school, and exit the site via the driveway on 84th Ave NE.

Students walking and biking to school utilize the existing sidewalks and bicycle lanes on the west side of 84th Ave NE and the north side of NE 132nd Street along the site frontages. The main student access the school is located on the west side of the school adjacent to the main parking lot.

As shown in Tables 3 and 4, a review of the 3-year crash history from 2019 through 2021 showed no crashes at any of the existing FHMS site access driveways.

Additionally, intersection and stopping sight distance at the existing site access locations on NE 132nd Street and 84th Ave NE was field-verified and meets the applicable standards based on *City of Kirkland Department of Public Works Pre-Approved Plans Policy R-13 (Intersection Sight Distance)* and *AASHTO Geometric Design of Highways and Streets*.

FUTURE CONDITIONS

Planned Transportation Improvements

A review of the City of Kirkland's Preliminary *2023-2028 Capital Improvement Program (CIP)* showed that there is one planned transportation improvement project in the study area:

STC 08900 – Juanita Drive Intersection and Safety Improvements. This project includes a set of intersection and other projects intended to improve safety for motor vehicles through elements such as added turn lanes, new channelization and increasing of sight distances. The individual projects are those identified in the Juanita Drive Corridor Study and consist of projects that are not currently funded as individual projects in the CIP. At the intersection of Juanita Drive and NE 132nd Street this project includes the improvements shown below and is anticipated to be complete by Fall 2024 (note this graphic is 60% design provided by the City). As such, these improvements were assumed to be completed in our future analysis.

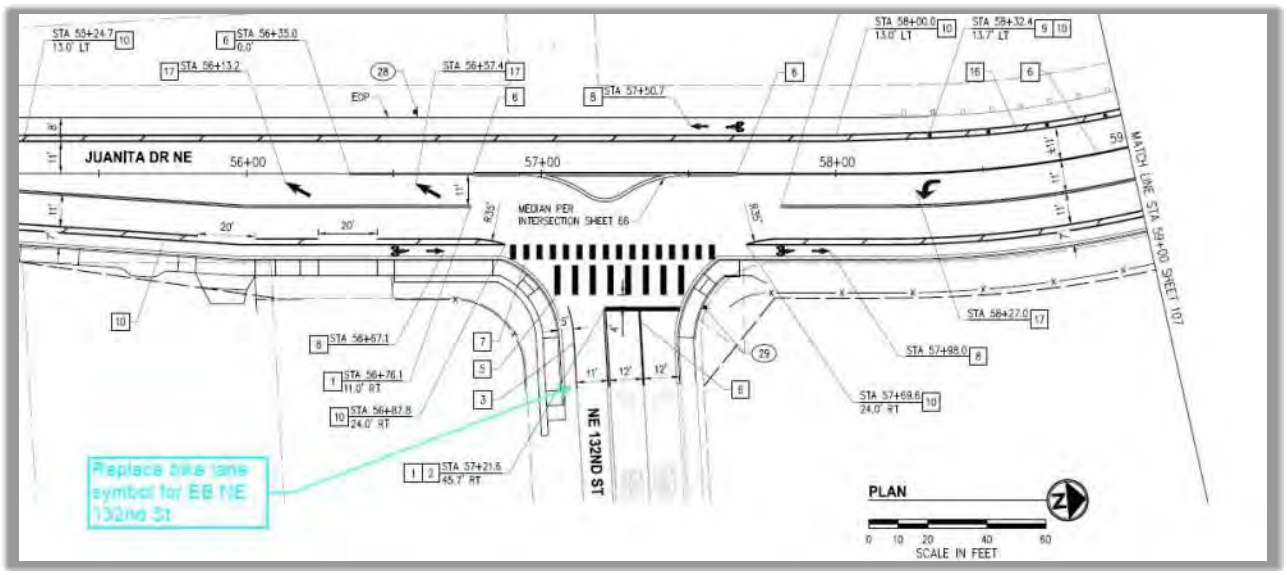

Project Trip Generation

The trip generation estimates for the proposed *Finn Hill Middle School Addition* project were based on trip rates derived from existing counts at the school. Consistent with historical school addition projects in the City of Kirkland (Mark Twain Elementary addition, Rose Hill Elementary addition, Ben Franklin Elementary addition, and Lake Washington High School addition), conducting counts at the existing school allows for a more accurate and reliable trip generation estimate of new trips generated by the proposed addition. Additionally, vehicular trip rates documented in the Institute of Transportation Engineers (ITE) *Trip Generation Manual* for public schools are typically lower than vehicular trip rates observed at schools in the Puget Sound vicinity so use of school-specific trip generation rates is preferred over ITE trip generation rates.

Traffic Counts

Existing traffic counts were collected at Finn Hill Middle School over an "average" two-day study period (Tuesday, May 10, 2022 and Thursday, May 12, 2022) during the AM peak period (8:00 – 9:00 AM), afternoon peak period (2:30 – 3:30 PM), and PM peak period (4:00 – 6:00 PM). It

should be noted that at the time of the counts in May 2022, FHMS was fully in-person and remote or hybrid (part remote part in-person) school was not offered.

The traffic counts included all vehicles entering and exiting the school driveways on NE 132nd Street as well as vehicles dropping off and picking up students on NE 132nd Street, 82nd Ave NE (south of NE 132nd Street), and 84th Ave NE north of NE 132nd Street. A map of the count locations and a summary of the trip generation data collected at the existing school are included in Appendix E.

It should be noted that at the time of the counts in May 2022, all vehicular trips at the EAS driveway on 84th Ave NE and also using the northernmost on-street parking on the west side of 84th Ave NE were assumed to be associated with EAS since it is our understanding based on discussions with LWSD that FHMS students could only enter and exit the school at the main school entrance on the south side of the school (adjacent to the main parking lot).

Existing Trip Generation Rates

Based on historical data from four historical trip generation studies conducted at LWSD middle schools, the two-day average of existing traffic counts at FHMS during the AM and Afternoon peak periods was increased by 9 percent and 3 percent respectively to estimate the school trip generation from 7:45 to 8:45 AM (AM peak hour) and from 2:45 to 3:45 PM (Afternoon peak hour). The detailed calculations are included in Appendix F.

The adjusted existing trip generation estimates and the school enrollment of 672 students at the time of the counts, were then used to derive weekday AM peak hour, afternoon peak hour, and PM peak hour trip rates were derived for the existing Finn Hill Middle School site. The resulting trip generation rates and directional splits from the trip generation study are summarized in Table 7 below. The trip rate calculations and vehicular count summaries are included in Appendix E.

Table 7
FHMS Existing Trip Generation Study Results

Time Period	Average Trip Rate (trips/student)[1]	Directional Split In	Directional Split Out
Daily	2.63	50%	50%
AM Peak Hour (7:45 – 8:45 AM)	0.84	51%	49%
Afternoon Peak Hour (2:45 – 3:45 PM)	0.37	45%	55%
PM Peak Hour (varies)	0.30	48%	52%

[1] Based on trip generation study completed at Finn Hill Middle School in May 2022 and historical LWSD middle school trip generation studies.

As shown in Table 7, the average trip rate at Finn Hill Middle School is 0.84 trips per student during the AM peak hour, 0.37 trips per student during the Afternoon peak hour, and 0.30 trips per student during the PM peak hour.

An estimated weekday daily trip rate for FHMS was derived using the Institute of Transportation Engineers (ITE) *Trip Generation Manual* (11th Edition) for Land Use Code 522 (Middle School) by applying the ratio of the ITE daily trip rate to the ITE AM peak hour trip rate to the AM peak hour Finn Hill Middle School trip rate [(2.10 / 0.67) X 0.84 = 2.63]. This approach to estimating a weekday daily trip rate for FHMS was chosen because it can be considered conservative for the following reasons:

- The estimated weekday daily trip rate of 2.63 is 25% higher than the 2.10 average weekday daily trip rate for a middle school as documented in ITE.
- The estimated weekday trip rate of 2.63 is 22% higher than the 2.16 estimated weekday daily trip rate based on the ratio of ITE daily to Afternoon (school peak) rates applied to the FHMS Afternoon peak hour trip rate [(2.10 / 0.36) X 0.37 = 2.16].

It is less appropriate to estimate daily trip generation of a middle school based on the PM peak hour trip generation, since the PM peak hour trip generation at a middle school also includes trips associated wth extra curricular activites and/or intramural sports during some months of the year and the trip generation associated with these activities may not increase in proportionally as a result of the proposed 200-student Addition project like the AM peak drop-off and Afternoon peak pick-up periods are expected to. As a sensitivity test, if the estimated weekday daily trip rate was calculated based on applying the ratio of ITE daily to PM rates to the FHMS PM peak hour trip rate [(2.10 / 0.15 X 0.30 = 4.20], the total estimated weekday daily trip generation associated with the *FHMS Addition* project would be 840 trips (as compared to 526 trips as shown in Table 8 below).

Future Trip Generation Estimate

To estimate the new trips generated by the proposed Addition project, the derived trip generation rates shown in Table 7 were applied to the net increase in student capacity associated with the proposed addition (200 students). The estimated new trips generated by the proposed project during the weekday AM peak hour, afternoon peak hour, and PM peak hour are summarized in Table 8. The detailed trip generation calculations are included in Appendix G.

Table 8
FHMS Addition Trip Generation Summary

Weekday Time Period	Trip Rate (trips/student)	# of additional Students	New Trips Generated		
			In	Out	Total
Daily	2.63	200	263	263	526
AM Peak Hour	0.84	200	86	82	168
Afternoon Peak Hour	0.37	200	33	41	74
PM Peak Hour	0.30	200	29	31	60

As shown in Table 8, the proposed *FHMS Addition* is estimated to generate 526 new weekday daily trips with 168 new weekday AM peak hour trips (86 entering, 82 exiting), 74 new weekday Afternoon peak hour trips (33 entering, 41 exiting), and 60 new weekday PM peak hour trips (29 entering, 31 exiting).

Transportation Concurrency

The project was evaluated for transportation concurrency by the City of Kirkland in November 2022. Based on the results, the City has determined the project meets the City's transportation concurrency requirements and a Concurrency Test Notice was issued for the project on November 9, 2022 and is included in Appendix H.

Project Trip Distribution and Assignment

School traffic traditionally has a slightly different distribution for inbound versus outbound trips. This is intuitive since inbound trips mainly originate at home, while outbound trips are likely more varied with regard to destination. For example, some parents might leave home to drop off their students at school and then exit the site and go to work instead of returning home.

The estimated weekday distribution of new trips associated with the proposed *FHMS Addition* project within the immediate vicinity of the school was based on the existing AM peak hour, Afternoon peak hour, and PM peak hour turning movement count volumes at the school driveways (2-day average of counts conducted in May 2022), and adjacent off-site study intersections (see Appendix B). The estimated weekday distribution of new trips did not take into account existing on-street drop-off/pick-up activity but did account for anticipated changes to outbound trip distribution patterns during the AM and afternoon peak hours as a result of the modified circulation plan implemented in September 2022. Beyond the immediate vicinity of the school, the estimated weekday distribution of new trips associated with the project was based on existing school boundary information (included in Appendix I), turning movement volumes, and general residential density within the boundary, anticipated origins/destinations, and additional bus trip estimates provided by LWSD. The detailed trip distribution calculations are included in Appendix I.

In September 2022, Finn Hill Middle School implemented a modified vehicular circulation during the AM peak drop-off and Afternoon peak pick-up periods where vehicles enter the site via the main driveway on NE 132nd Street, circulate through the parking lot, drop-off/pick-up students on the east side of the main parking lot adjacent to the school, and exit the site via the driveway on 84th Ave NE. It is anticipated that this new vehicular circulation pattern will be maintained with the proposed addition project. Therefore, the distribution and assignment of project trips associated with the proposed addition reflect the new circulation pattern at the site access driveways and adjacent study intersections.

The estimated distribution of new weekday AM peak hour, afternoon peak hour, and PM peak hour school trips are illustrated graphically in Figures 5 - 7. Figures 5 - 7 also illustrate the assignment of the new trips associated with the proposed addition project through the site access driveways and off-site study intersections during the weekday AM, afternoon, and PM peak hours.

The weekday distribution of new daily project trips was estimated by averaging the AM peak hour, afternoon peak hour, and PM peak hour distributions. Since the majority of the traffic generated by the school occurs during these 3 peak hours, it is logical and appropriate to average them to estimate the daily distribution. The weekday distribution and assignment of new daily project trips through the study intersections is illustrated in Appendix J.

It should be noted that the project trip distribution illustrated in Figures 5 – 7 and Appendix J differs from the estimated project trip distribution documented in the Trip Generation and Traffic Scoping Memorandum (TENW, November 9, 2022) as a result of additional detailed trip distribution calculations (see Appendix I) conducted based on the existing driveway counts, counts at 84th Ave NE/NE 132nd Street, and anticipated shifts in trip distribution based on the new circulation pattern.

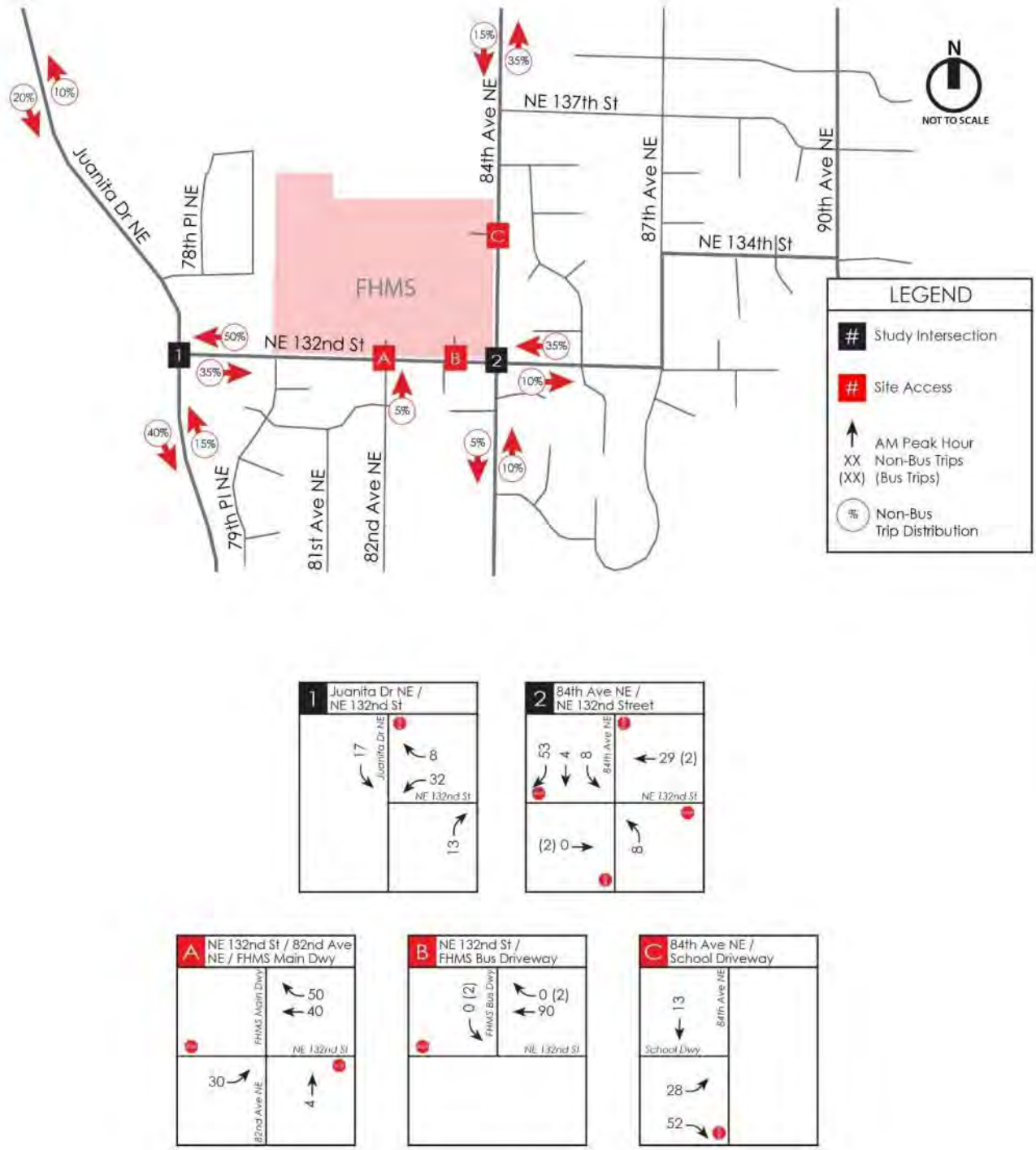

Figure 5: AM Peak Hour Project Trip Distribution and Assignment

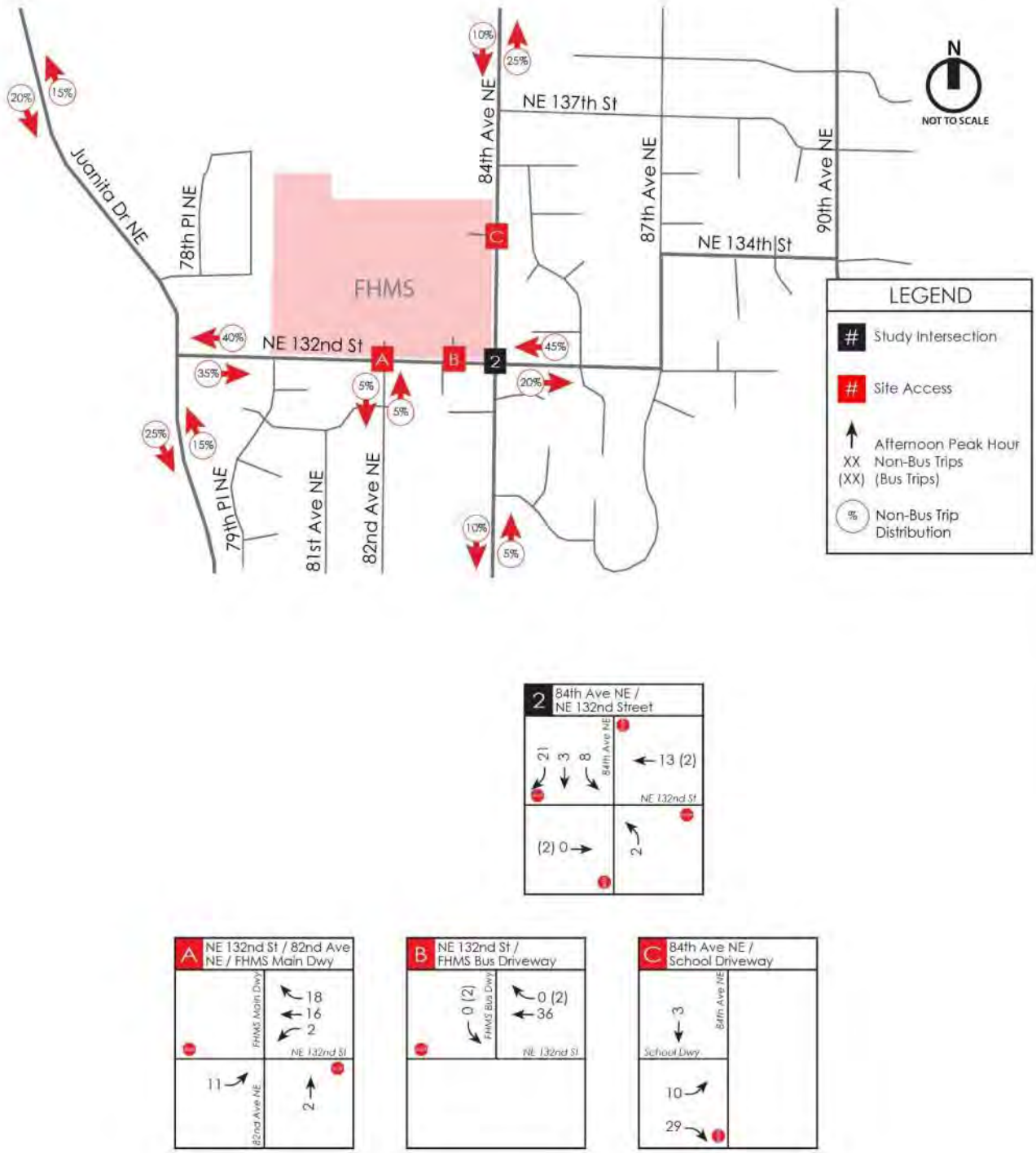

Figure 6: Afternoon Peak Hour Project Trip Distribution and Assignment

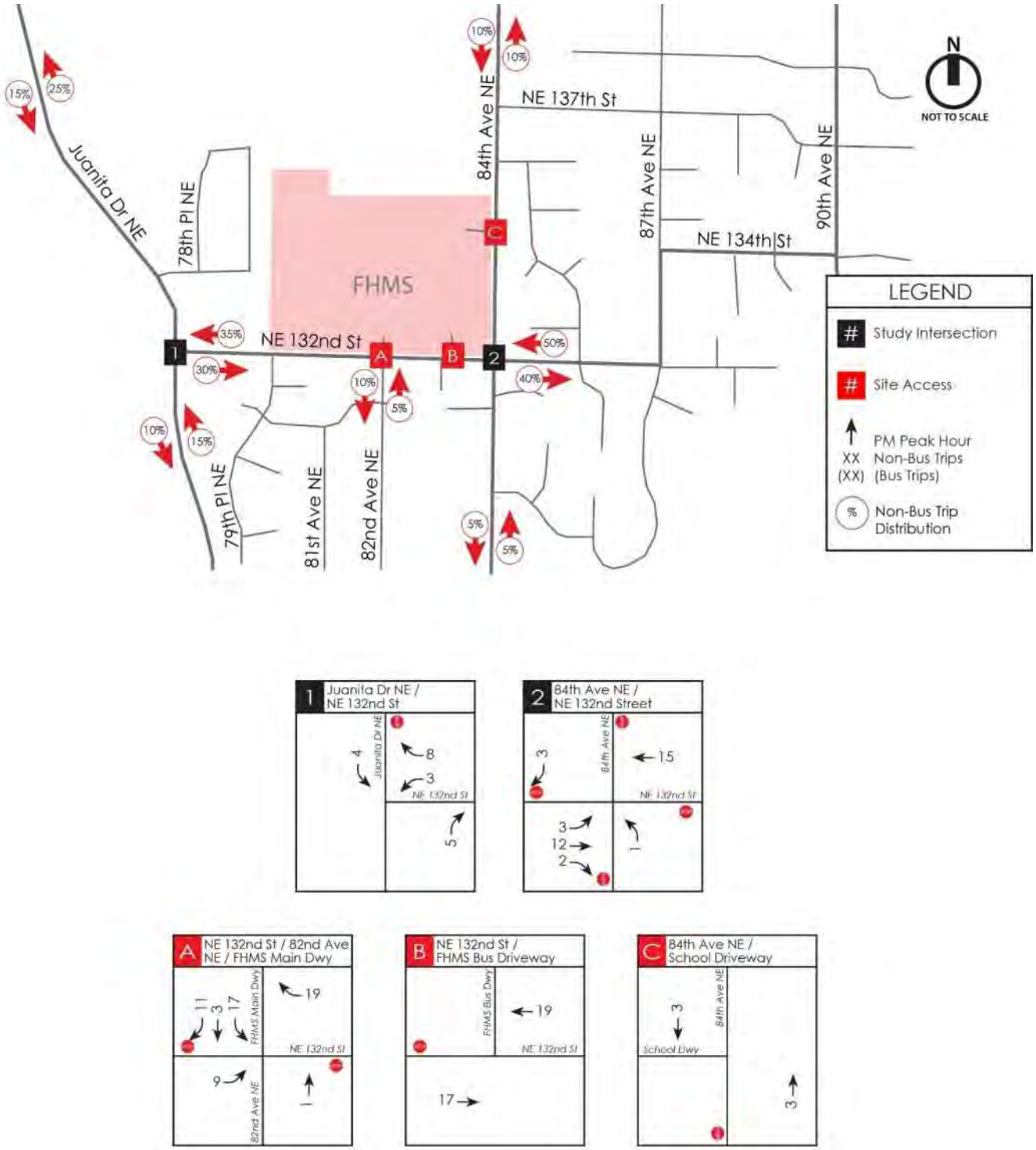

Figure 7: PM Peak Hour Project Trip Distribution and Assignment

Proportional Share Evaluation

Based upon the City of Kirkland's *Policy R-38 Transportation Impact Analysis Review* (July 2022), a detailed traffic analysis is required at intersections that have a proportional share of project traffic of at least 1 percent. The proportional share calculations are based on use of the City's proportional share spreadsheet and the project's daily trip assignment, as shown in Appendix J. Table 9 summarizes the intersection proportional share calculations.

Table 9
Intersection Proportional Shares

Intersection #	Intersection	Proportional Share (%)	Detailed Analysis Required?
502	Juanita Dr NE / South Holmes Pt Dr NE	0.34%	No
503	Juanita Dr NE / NE 141st Street	0.64%	No
--	84th Ave NE / NE 132nd Street	1.94%	YES
--	Juanita Dr NE / NE 132nd Street	2.28%	YES

As shown in Table 9, no concurrency intersections have a project proportional share of at least one percent with the proposed *FHMS Addition* project. However, detailed traffic analysis was conducted at the intersection of 84th Ave NE/NE 132nd Street during the AM, afternoon, and PM peak hours and at the intersection of Juanita Dr NE/NE 132nd Street during the AM and PM peak hours (since they have a project proportional share of more than one percent). Detailed traffic analysis was also conducted at the site access driveways during the AM, afternoon, and PM peak hours. Appendix K contains the proportional share evaluation worksheets for each intersection.

Future Traffic Volumes

Finn Hill Middle School recently implemented a modified vehicular circulation during the AM peak drop-off and Afternoon peak pick-up periods where vehicles enter the site via the main driveway on NE 132nd Street, circulate through the parking lot, drop-off/pick-up students on the east side of the main parking lot adjacent to the school, and exit the site via the driveway on 84th Ave NE. It is anticipated that this new vehicular circulation pattern will be maintained with the proposed addition project.

Therefore, in order to estimate future year 2024 No Action (without project) AM and afternoon, peak hour traffic volumes, the existing May 2022 traffic volumes were adjusted at the site access driveways and 84th Ave NE/NE 132nd Street study intersection to reflect the new circulation pattern (removing exiting trips from the 132nd driveway and adding exiting trips to the 84th driveway). An additional adjustment was then made to the study intersections and site access driveways to reflect the fact that with the new circulation pattern, an additional 30% of exiting trips during the AM peak hour and an additional 20% of exiting trips during the Afternoon peak hour were estimated to exit to the north on 84th Ave NE instead of exiting to the north on Juanita Drive NE under the previous (pre-September 2022) vehicular circulation pattern. The 30% AM peak hour and 20% afternoon peak hour shift in exiting trips to the north was estimated based on a comparison of May 2022 and October 2022 volumes at the Juanita Drive NE/NE 132nd Street intersection. A summary of the volume adjustments are included in Appendix L.

As a result of the volume adjustments to reflect the new circulation pattern, some of the future year AM and afternoon peak hour traffic volumes at the intersection of 84th Ave NE/NE 132nd Street

and at the site access driveways may be lower than the existing (May 2022) volumes. It should be noted that no adjustments were made to the October 2022 AM peak hour traffic count at Juanita Drive NE/NE 132nd Street since the new vehicular circulation pattern was in place at the time of the October 2022 count.

A 2.0 percent growth rate compouned annually was then applied to the "adjusted" existing (2022) volumes. *It should be noted that the annual growth rate was not applied to entering and exiting movements at the existing FHMS site access driveways on NE 132nd Street and 84th Ave NE.* The resulting 2024 No Action AM and afternoon peak hour traffic volumes at the study intersections and site access driveways are illustrated in Figure 8 - 9.

Similarly, to estimate future year 2024 No Action (without project) PM peak hour traffic volumes, a 2.0 percent growth rate compounded annually was applied to the existing 2022 traffic volumes. The resulting 2024 No Action PM peak hour traffic volumes at the study intersections and site access driveways are illustrated in Figure 10.

Future year 2024 With Project peak hour traffic volumes were estimated by adding the new project trips associated with the *FHMS Addition* (Figures 5 - 7) to the 2024 No Action traffic volumes (Figures 8 - 10). The resulting future year 2024 With Project peak hour traffic volumes at the study intersections are shown in Figures 11 - 13 for the weekday AM, afternoon, and PM peak hours.

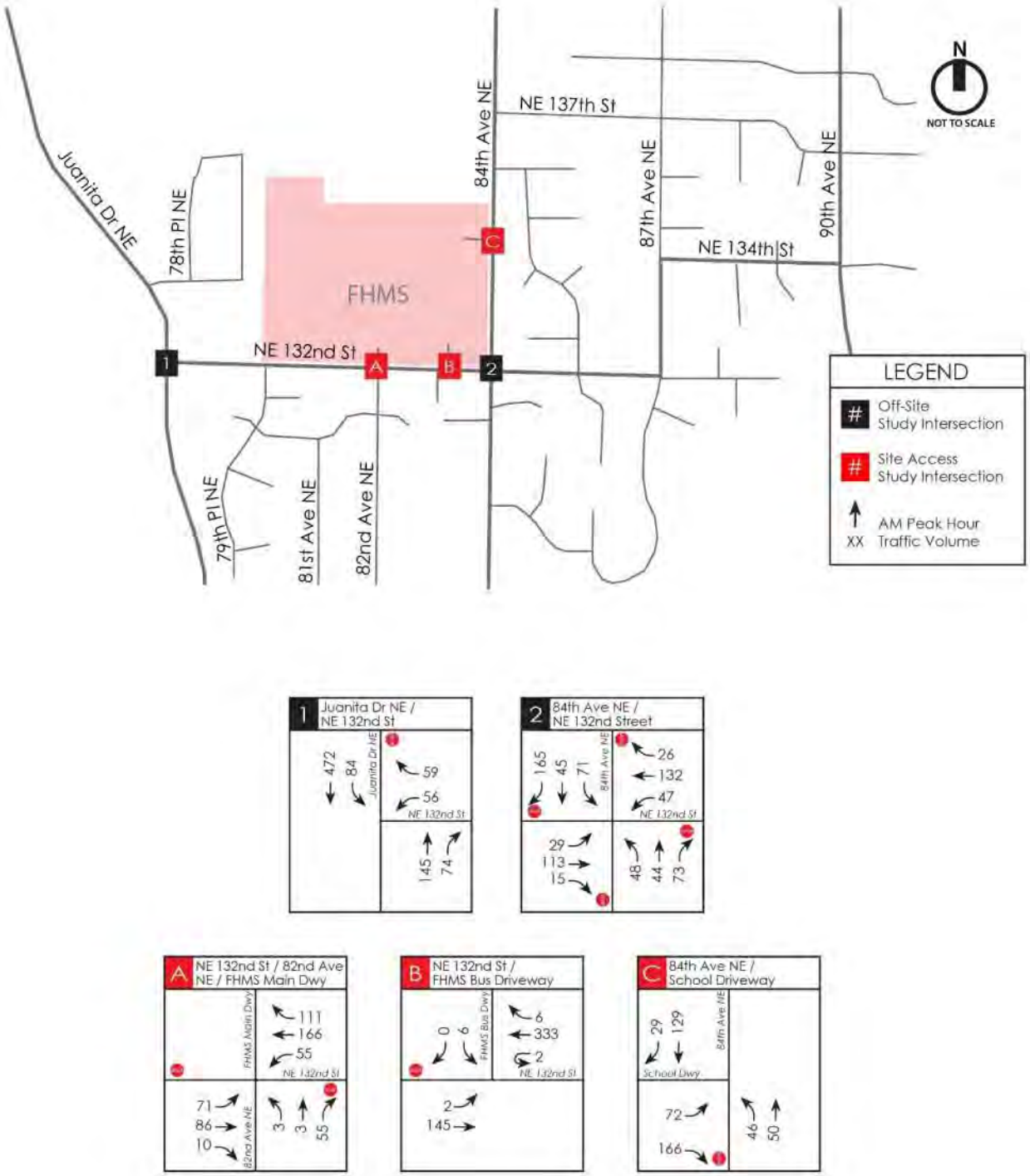

Figure 8: 2024 No Action AM Peak Hour Traffic Volumes

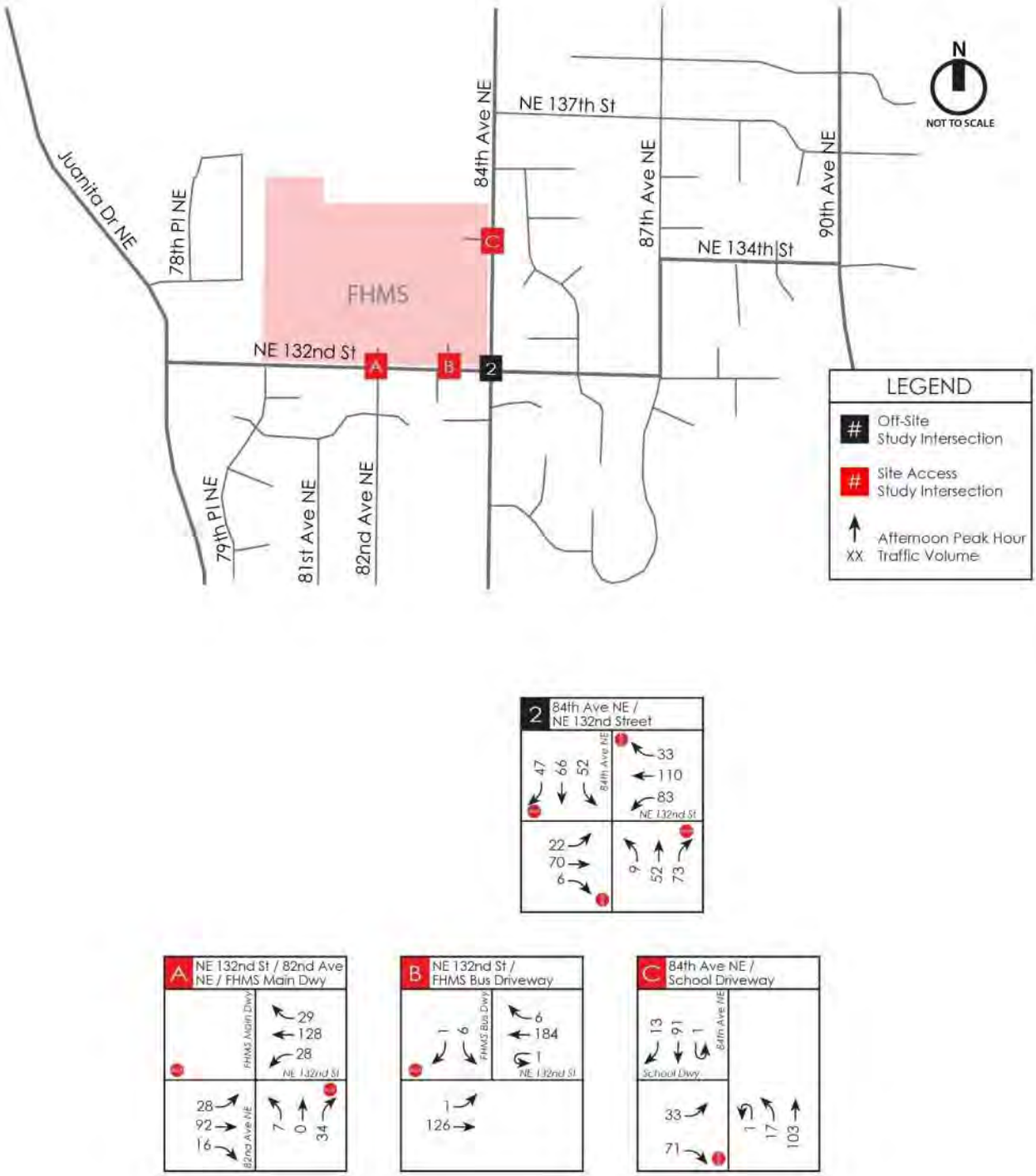

Figure 9: 2024 No Action Afternoon Peak Hour Traffic Volumes

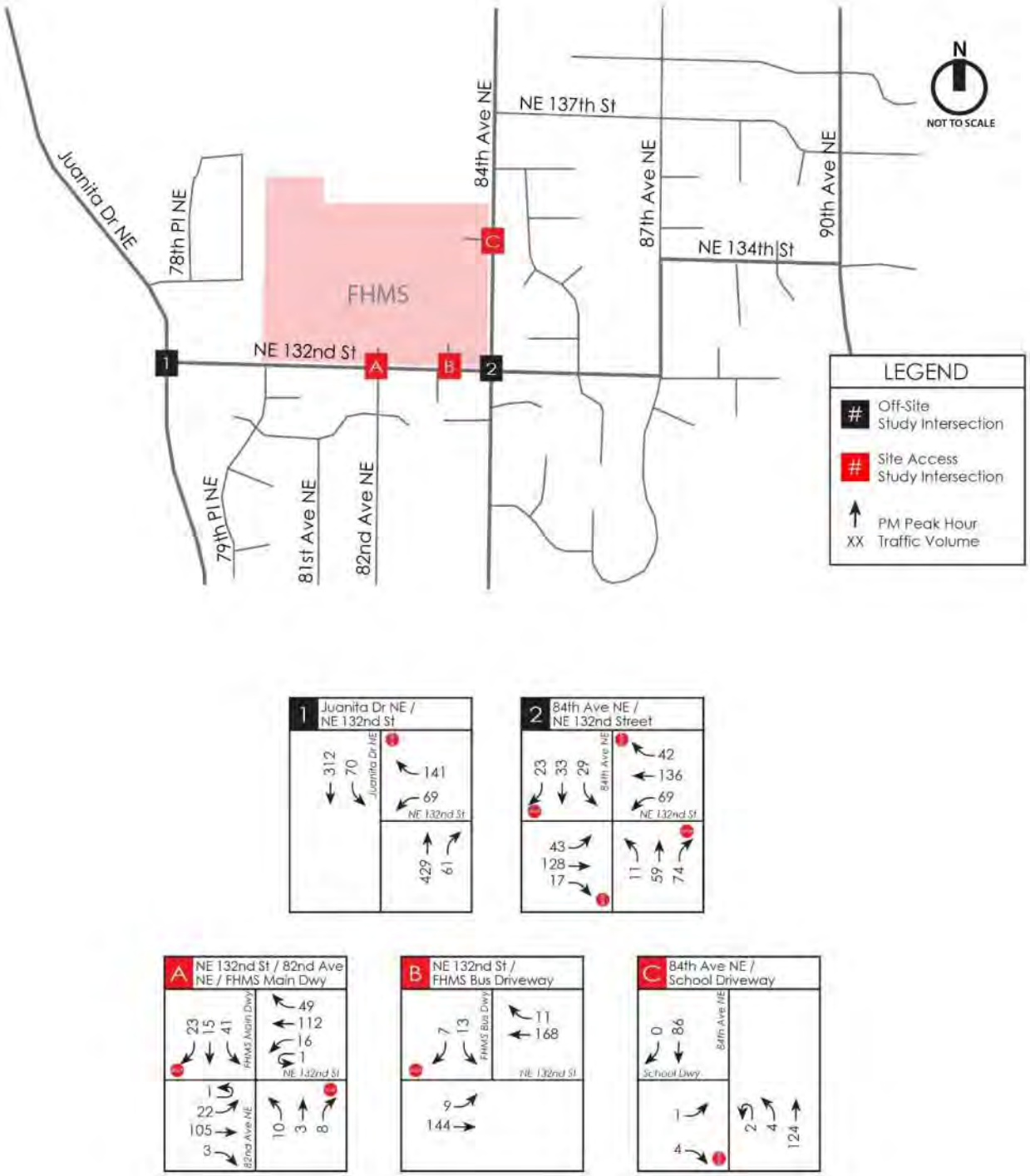

Figure 10: 2024 No Action PM Peak Hour Traffic Volumes

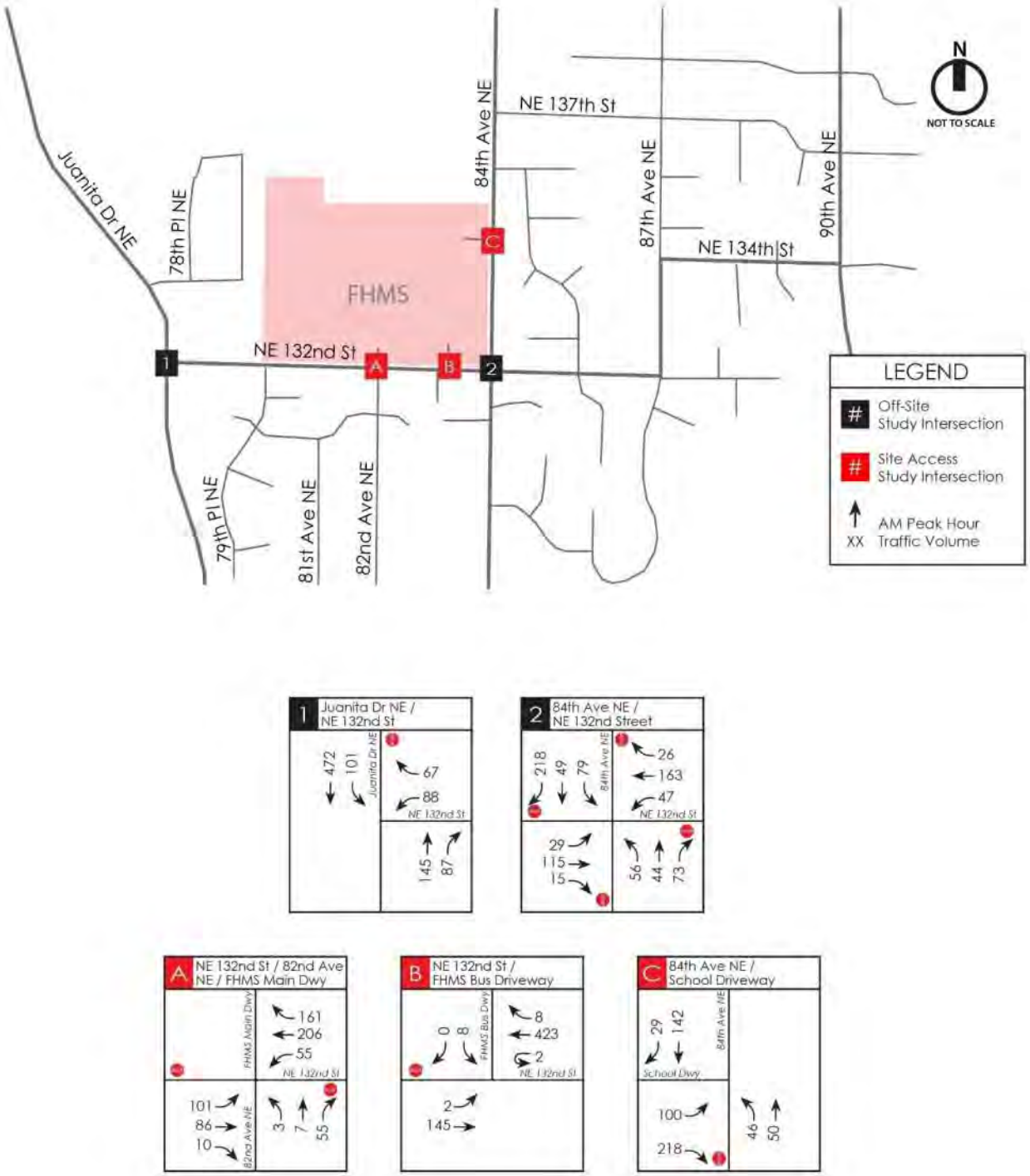

Figure 11: 2024 With Project AM Peak Hour Traffic Volumes

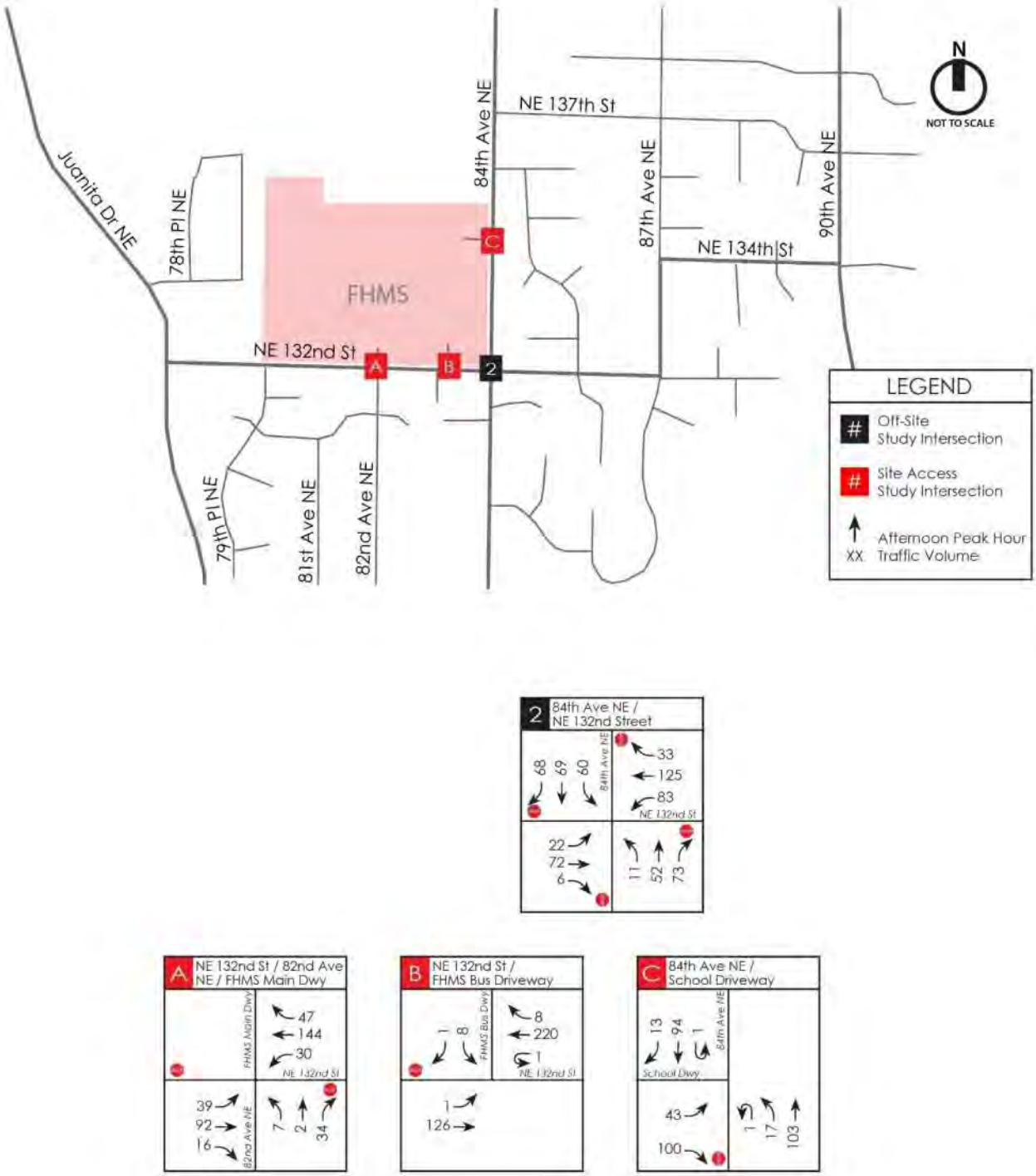

Figure 12: 2024 With Project Afternoon Peak Hour Traffic Volumes

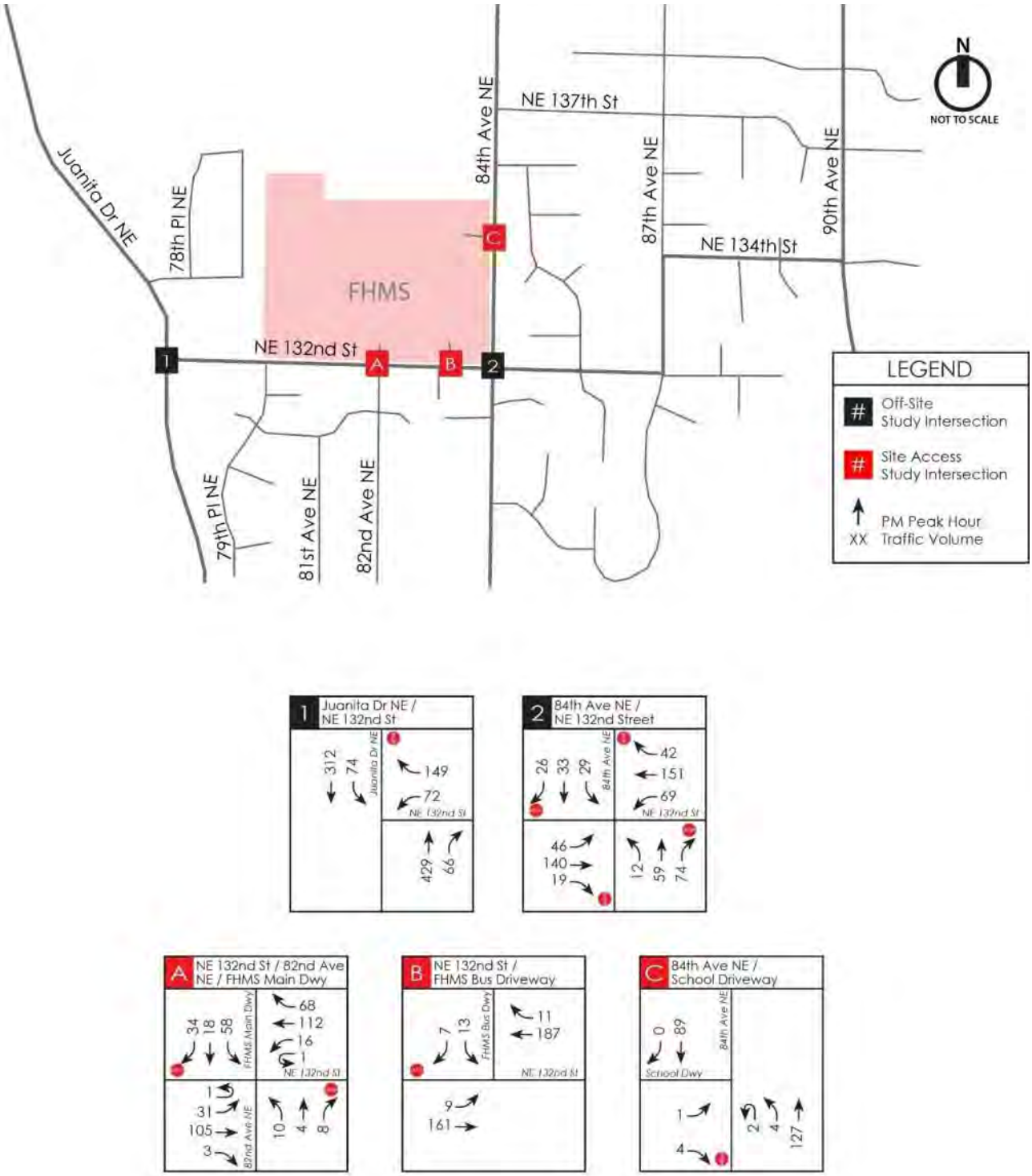

Figure 13: 2024 With Project PM Peak Hour Traffic Volumes

Intersection Operations

A future year weekday peak hour Level of Service (LOS) analysis was conducted at the study intersections for future year 2024 No Action (without project) conditions and future year 2024 conditions with the proposed *FHMS Addition* project.

The roadway network and signal timing assumed in the future year 2024 LOS analysis at the study intersections was based on existing conditions except at the intersection of Juanita Drive NE/NE 132nd Street where the planned improvement of a southbound left-turn lane was assumed based on City CIP project STC 08900 which is estimated to be constructed in 2024.

The future year 2024 traffic volumes used in the year 2024 LOS analyses were shown previously in Figures 11 – 13. The percentage of heavy vehicles (% HV) input into the Synchro software program was recalculated for the future year 2024 with project scenario based on the volume of project traffic added to the study intersections.

The weekday AM peak hour, afternoon peak hour, and PM peak hour LOS results at the study intersections for 2022 No Action and With Project conditions are summarized in Tables 10 - 12. The LOS worksheets are included in Appendix D.

Table 10
2024 AM Peak Hour Level of Service Summary

Study Intersection / Site Access Driveway	2024 No Action LOS	2024 No Action Delay (sec)	2024 With Project LOS	2024 With Project Delay (sec)
All-Way Stop-Controlled Intersection [2]				
2. 84th Ave NE / NE 132nd Street	C	22.4	E	47.4
Eastbound Approach	*C*	*17.1*	*C*	*21.3*
Westbound Approach	*C*	*21.3*	*D*	*34.1*
Northbound Approach	*C*	*16.6*	*C*	*21.3*
Southbound Approach	*D*	*29.5*	*F*	*81.5*
Side-Street Stop-Controlled Intersections				
1. Juanita Dr NE / NE 132nd Street				
Westbound Left-Turn	B	14.6	C	16.2
Westbound Right-Turn	A	9.6	A	9.7
Southbound Left-Turn	A	8.0	A	8.1
A. NE 132nd St / 82nd Ave NE / FHMS Main Driveway				
Eastbound Left-Turn	A	9.1	B	10.1
Westbound Left-Turn	A	7.7	A	7.7
Northbound Approach	B	11.8	C	16.6
Southbound Approach [1]	--	--	--[1]	--[1]
B. NE 132nd Street / FHMS East (Bus) Driveway				
Eastbound Left-Turn	B	10.6	B	11.5
Southbound Approach	D	29.9	E	41.3
C. 84th Ave NE / FHMS & EAS Driveway				
Northbound Left-Turn	A	8.0	A	8.1
Eastbound Approach	C	15.4	C	22.7

1 Exiting vehicles are restricted on the southbound approach during the AM peak hour with the new (as of September 2022) circulation plan.
2 LOS and delay for all-way stop-controlled intersections are reported as a weighted average of all approaches based on HCM methodology. The LOS and delay for the individual approaches are presented for disclosure. BOLD = Worst approach.

Table 11
2024 Afternoon Peak Hour Level of Service Summary

	2024 No Action		2024 With Project	
Study Intersection / Site Access Driveway	LOS	Delay (sec)	LOS	Delay (sec)
All-Way Stop-Controlled Intersection [2]				
2. 84th Ave NE / NE 132nd Street	B	10.4	B	11.0
Eastbound Approach	*A*	*9.8*	*B*	*10.1*
Westbound Approach	*B*	*11.2*	*B*	*11.9*
Northbound Approach	*A*	*9.7*	*A*	*9.9*
Southbound Approach	*B*	*10.3*	*B*	*11.0*
Side-Street Stop-Controlled Intersections				
1. Juanita Dr NE / NE 132nd Street				
Westbound Left-Turn	--	--	--	--
Westbound Right-Turn	--	--	--	--
Southbound Left-Turn	--	--	--	--
A. NE 132nd St / 82nd Ave NE / FHMS Main Driveway				
Eastbound Left-Turn	A	8.2	A	8.4
Westbound Left-Turn	A	7.5	A	7.6
Northbound Approach	B	10.0	B	10.5
Southbound Approach [1]	--	--	--[1]	--[1]
B. NE 132nd Street / FHMS East (Bus) Driveway				
Eastbound Left-Turn	A	9.1	A	9.2
Southbound Approach	B	14.9	C	16.0
C. 84th Ave NE / FHMS & EAS Driveway				
Northbound Left-Turn	A	7.7	A	7.7
Eastbound Approach	B	10.4	B	10.8

-- Not studied during afternoon peak hour.

1 Exiting vehicles are restricted on the southbound approach during the Afternoon peak hour with the new (as of September 2022) circulation plan.

2 LOS and delay for all-way stop-controlled intersections are reported as a weighted average of all approaches based on HCM methodology. The LOS and delay for the individual approaches are presented for disclosure.
BOLD = Worst approach.

Table 12
2024 PM Peak Hour Level of Service Summary

Study Intersection / Site Access Driveway	2024 No Action LOS	2024 No Action Delay (sec)	2024 With Project LOS	2024 With Project Delay (sec)
All-Way Stop-Controlled Intersection [1]				
2. 84th Ave NE / NE 132nd Street	B	10.3	B	10.7
Eastbound Approach	*B*	*10.1*	*B*	*10.5*
Westbound Approach	*B*	*10.8*	*B*	*11.4*
Northbound Approach	*A*	*10.0*	*B*	*10.2*
Southbound Approach	*A*	*9.5*	*A*	*9.7*
Side-Street Stop-Controlled Intersections				
1. Juanita Dr NE / NE 132nd Street				
Westbound Left-Turn	B	14.4	B	14.6
Westbound Right-Turn	B	12.9	B	13.1
Southbound Left-Turn	A	8.8	A	8.8
A. NE 132nd St / 82nd Ave NE / FHMS Main Driveway				
Eastbound Left-Turn	A	7.9	A	8.0
Westbound Left-Turn	A	7.6	A	7.6
Northbound Approach	B	12.3	B	13.0
Southbound Approach	C	15.3	C	17.7
B. NE 132nd Street / FHMS East (Bus) Driveway				
Eastbound Left-Turn	A	8.0	A	8.1
Southbound Approach	B	13.8	B	14.6
C. 84th Ave NE / FHMS & EAS Driveway				
Northbound Left-Turn	A	7.5	A	7.5
Eastbound Approach	A	9.0	A	9.1

1. LOS and delay for all-way stop-controlled intersections are reported as a weighted average of all approaches based on HCM methodology. The LOS and delay for the individual approaches are presented for disclosure.
BOLD = Worst approach.

As shown in Tables 10 - 12, the all-way stop controlled study intersection and individual movements at the side-street stop-controlled intersections are all anticipated to operate at LOS D or better in 2024 during the weekday AM, afternoon, and PM peak hours without or with the proposed *FHMS Addition* with two exceptions; the 84th Ave NE/NE 132nd Street all-way stop intersection is anticipated to operate at LOS E with the proposed project during the weekday AM peak hour and the FHMS East site access (bus) driveway on NE 132nd Street is anticipated to operate at LOS D without the project and LOS E with the project during the weekday AM peak hour.

The installation of site-specific improvements under SEPA is primarily determined by the results of both the proportional share analysis (shown in Table 8, and the LOS analysis at the study intersections (shown in Table 9 - 11). Table 13 is used as a guide by the City of Kirkland in determining when mitigation under SEPA is required.

Table 13
Guidelines for Installation of Improvements under SEPA

Peak Hour Intersection LOS with Project Traffic	Install Improvements?
A thru D	No
E	If intersection proportional share > 15%
F	If intersection proportional share > 5%

As shown in Tables 10 - 12, all study intersections and site access driveways are anticipated to operate at LOS D or better in the 2024 without or with the proposed *FHMS Addition* with two exceptions:

- The 84th Ave NE/NE 132nd Street all-way stop intersection is anticipated to operate at LOS E with the proposed project during the weekday AM peak hour. The *FHMS Addition* project proportional share at this intersection is 1.94% (as shown in Table 9). As a result, the installation of improvements under SEPA is not required at this intersection.

  It should be noted that as discussed in the trip generation above, if the estimated weekday daily trip rate was calculated based on applying the ratio of ITE daily to PM rates to the FHMS PM peak hour trip rate [(2.10 / 0.15) X 0.30 = 4.20], the total estimated weekday daily trip generation associated with the FHMS Addition project would be 840 trips. With an estimated weekday daily trip generaton of 840 trips, the the intersection proportionate share at the 84th Ave NE/NE 132nd Street intersection would be approximately 3.1% (see Appendix K). As a result, installation of improvements at this intersection would still not be required.

  *It should also be noted that an additional sensitivity test was completed to determine the project's proportionate share at the 84th Ave NE/NE 132nd Street intersection **if** the estimated daily trip generation of 840 trips was used, **and** if the 15 percent of daily project traffic estimated to exit the site as an eastbound left-turn at the driveway on 84th Ave NE instead exited the site as an eastbound right-turn and then made a southbound right-turn at NE 132nd Street to continue to Juanita Drive NE. The resulting proportionate share at the 84th Ave NE/NE 132nd Street intersection would still be approximately 3.2% (see Appendix K).*

- The FHMS East (bus) driveway on NE 132nd Street is anticipated to operate at LOS E with the proposed project during the weekday AM peak hour. It should be noted that the LOS E condition only impacts 8 exiting buses during the AM peak hour.

Queuing Analysis

Per the request of the City, a future year weekday peak hour queuing analysis was conducted at two study intersections and the site access driveways for future year 2024 No Action (without project) conditions and future year 2024 conditions with the proposed *FHMS Addition* project. The queuing analysis was based on the methodology and procedures outlined in the 6th Edition of the *Highway Capacity Manual* (HCM) using the *Synchro 11* software program. The reported queue lengths are 95th percentile queues and represent a condition that is exceeded only five percent of the time. The 2024 No Action and With-Project peak hour traffic volumes at the driveways used in these analyses are shown in Figures 9 - 14.

The results of the weekday peak hour queuing analysis are summarized in Table 14. The queue worksheets are included in Appendix D.

Table 14
2024 Peak Hour Queuing Analysis Summary

		95th % Queue Length (ft)[1]					
		AM PEAK HOUR		AFTERNOON PEAK HOUR		PM PEAK HOUR	
Intersection / Movement	Storage (ft)	2024 No Action	2024 With Project	2024 No Action	2024 With Project	2024 No Action	2024 With Project
1. Juanita Dr NE / NE 132nd St							
Westbound Left-Turn	125'+	25'	25'	--	--	25'	25'
Westbound Right-Turn	125'	<25'	<25'	--	--	25'	25'
Southbound Left-Turn	400'+	<25'	<25'	--	--	<25'	<25'
2. 84th Ave NE / NE 132nd St							
Eastbound Approach	180'+	75'	75'	25'	25'	25'	25'
Westbound Approach	450'+	100'	175'	50'	50'	50'	50'
Northbound Approach	160'+	75'	100'	25'	25'	25'	25'
Southbound Approach	675'+	175'	400'	25'	50'	25'	25'
A. NE 132nd St / 82nd Ave NE / FHMS Main Driveway							
Eastbound Left-Turn	550'+	25'	<25'	<25'	<25'	<25'	<25'
Westbound Left-Turn	350'+	<25'	<25'	<25'	<25'	<25'	<25'
Northbound Approach	200'+	25'	25'	<25'	<25'	<25'	<25'
Southbound Approach	100'+	--[2]	--[2]	--[2]	--[2]	25'	50'
B. NE 132nd Street / FHMS East (Bus) Driveway							
Eastbound Left-Turn	350'+	0'	0'	0'	0'	0'	0'
Southbound Approach	100'+	<25'	<25'	<25'	<25'	<25'	<25'
C. 84th Ave NE / FHMS & EAS Driveway							
Northbound Left-Turn	675'	<25'	<25'	<25'	<25'	0'	0'
Eastbound Approach	100'+	75'	175'	25'	25'	0'	0'

+ Queue storage measured to nearest intersection. Additional storage may be available.

[1] Queues are 95th Percentile queues. Vehicle queues reported by HCM methodology are multipled by 25 feet per vehicle to estimate the vehicular queue in feet and rounded to the nearest 25 feet. <25' is a queue statistically less than 1 vehicle.

[2] Exiting vehicles are restricted on the southbound approach during the AM and Afternoon peak hours with the new (as of September 2022) circulation plan.

As shown in Table 14, the 95th percentile queues during the AM, afternoon, and PM peak hours at the study intersections closest to Finn Hill Middle School are anticipated to be accommodated within the existing storage. During the AM peak hour in 2024, the 95th percentile queue for the southbound approach at 84th Ave NE/NE 132nd Street is anticipated to be 175 feet without the addition project and 400 feet with the proposed Addition project. The anticipated 400-foot queue with the Addition project is a 95th percentile queue that is only exceeded 5% of the time and would not impact any driveways on NE 84th Street because the closest driveway is located approximately 650 feet north of NE 132nd Street. It should be noted that the volume to capacity ratio (V/C ratio) fo the southbound approach for year 2024 AM peak hour conditions with the proposed project is estimated to be

greater than 1.0, therefore 95th percentile queues observed in the field may be longer than the Synchro software is projecting based on HCM methodology. However, with approximately 650 feet of southbound storage available before impacting an existing driveway, southbound queues are anticipated to be accommodated within the existing storage during the weekday AM peak hour with the project.

Additionally, the 95th percentile queues during the AM, afternoon, and PM peak hours at the FHMS site access driveways are anticipated to be 50 feet (2 vehicles) or less without and with the project in 2024 with exception to the exiting (eastbound) approach at the site access driveway on 84th Ave NE during the AM peak hour which is anticipated to be 75 feet without the project and 175 feet with the project and would be accommodated on-site. The anticipated 175-foot eastbound queue at the driveway on 84th Ave NE during the AM peak hour is a condition that would be exceeded only five percent of the time, and average queues are expected to be less than 175 feet. Thus, eastbound (exiting) vehicle queues at the driveway on 84th Ave NE are not expected to impact operations of the EAS drop-off loop and are also not expected to impact the 6 parallel parking located on the north side of the driveway. The FHMS administration recently confirmed that the new circulation plan has improved operations significantly during peak AM drop-off and peak afternoon pick-up and there have been no concerns raised by parents of either FHMS or EAS regarding the driveway on 84th Ave NE.

Vehicular Access and Circulation

With the proposed *FHMS Addition*, vehicular access to the site would continue to be provided via the two access driveways on NE 132nd Street (one for visitors/staff and one for buses) and the one access driveway on 84th Ave NE.

Finn Hill Middle School implemented a modified vehicular circulation in September 2022 during the AM peak drop-off and Afternoon peak pick-up periods where vehicles enter the site via the main driveway on NE 132nd Street, circulate through the parking lot, drop-off/pick-up students on the east side of the main parking lot adjacent to the school, and then exit the site via the driveway on 84th Ave NE. This new vehicular circulation pattern is anticipated to be maintained with the proposed addition project.

The increase in AM and Afternoon peak period entering traffic volumes as a result of the *FHMS Addition* project is anticipated to be accommodated within the new circulation pattern on-site and therefore not result in additional significant adverse impacts to the 6 existing single-family home driveways located within 150 feet of the FHMS main access on NE 132nd Street. Similarly, the increase in AM and Afternoon peak period exiting traffic volumes as a result of the FHMS Addition project would not result in additional significant adverse impacts for the 1 single-family home driveway located within 150 feet of the FHMS access on 84th Ave NE.

Service vehicle circulation on the FHMS site is also expected to be maintained with the proposed project.

Non-Motorized and Transit Impacts

Pedestrian and bicycle circulation on the FHMS site is expected to be maintained with the proposed *FHMS Addition* project. The demand on pedestrian facilities in the project vicinity is expected to increase with the proposed development. While the Addition project would increase the demand on pedestrian facilities, this increased demand is not expected to result in a significant adverse

impact. Existing pedestrian facilities in the vicinity area (i.e. sidewalks) are sufficient to accommodate the additional pedestrian demand. Further, any increase in pedestrian demand would be considered positive since this would result in a decrease in passenger cars on the surrounding road network.

The proposed project is also anticipated to generate some additional bicycle trips. It is anticipated that the existing bicycle facilities in the project vicinity would be adequate to accommodate any additional bicycle trips.

King County Metro existing bus routes in the vicinity of FHMS do not route on NE 132nd Street along the school frontage but Route 225 does route on 84th Ave NE along the school frontage. Thus, there may be minor impacts to the existing public transit service for Route 225 during the peak school AM drop-off period and peak afternoon pick-up period as a result of the proposed *FHMS Addition* project.

Safety

A review of crash history over the 3-year period from 2019 to 2021 showed that there were no crashes at the existing FHMS site access driveways on NE 132nd Street and 84th Ave NE. Additionally, there were no crashes along the segment of NE 132nd Street from 80th Ave NE and 84th Ave NE and the segment of 84th Ave NE from NE 132nd Street and NE 136th Street over the same 3-year period. The crash history also showed that there were no crashes involving pedestrians or bicyclists at the study intersections or along the site frontages on 18th Avenue and 19th Avenue during from 2019 to 2021.

Based on crash data from the City of Kirkland at the intersection of 84th Ave NE/NE 132nd Street, of the 7 total crashes that occurred at the intersection over the 6-year period from 2017 to 2022, none occurred during the peak school drop-off or pick-up periods (approximately 8 to 9 AM and 2:30 to 3:30 PM).

A review of the historical crash history in the immediate school vicinity showed there are no existing safety concerns at the school driveways or at adjacent intersections during the peak AM and Afternoon school periods, and new vehicular, pedestrian, and/or bicycle trips associated with the proposed *FHMS Addition* project are not ancitipated to have an adverse impact on safety within the vicinity of the school site. However, there is the potential that additional vehicular, pedestrian, and bicycle traffic as a result of the *FHMS Addition* project may result in new safety concerns. In the event that new safety concerns develop as a result of the project, LWSD and the Middle School will make every effort to ensure that any concerns are addressed immediately and will work with the City if necessary to address any concerns that may arise.

Parking Analysis

The parking analysis for the *FHMS Addition* project is documented under a separate memorandum.

MITIGATION SUMMARY

Concurrency

The project was evaluated for transportation concurrency by the City of Kirkland in November 2022. Based on the results, the City has determined the projects meets the City's transportation concurrency requirements. Therefore, no short-term transportation mitigation was required to obtain concurrency in the City of Kirkland.

SEPA Improvements

The installation of site-specific improvements under SEPA is determined based on the guidelines shown in Table 13. Based on the results of the LOS analysis and the proportional share calculations at the study intersections, the installation of improvements under SEPA is not required.

Transportation Impact Fees

Transportation mitigation required by the City of Kirkland is payment of an impact fee based on the project's proposed land use. The currently adopted transportation impact fee is $479.04 per middle school student as of January 1, 2023. The cost per trip is subject to change and final impact fee calculations will be conducted at the time of building permit issuance.

Appendix A

Preliminary Site Plan

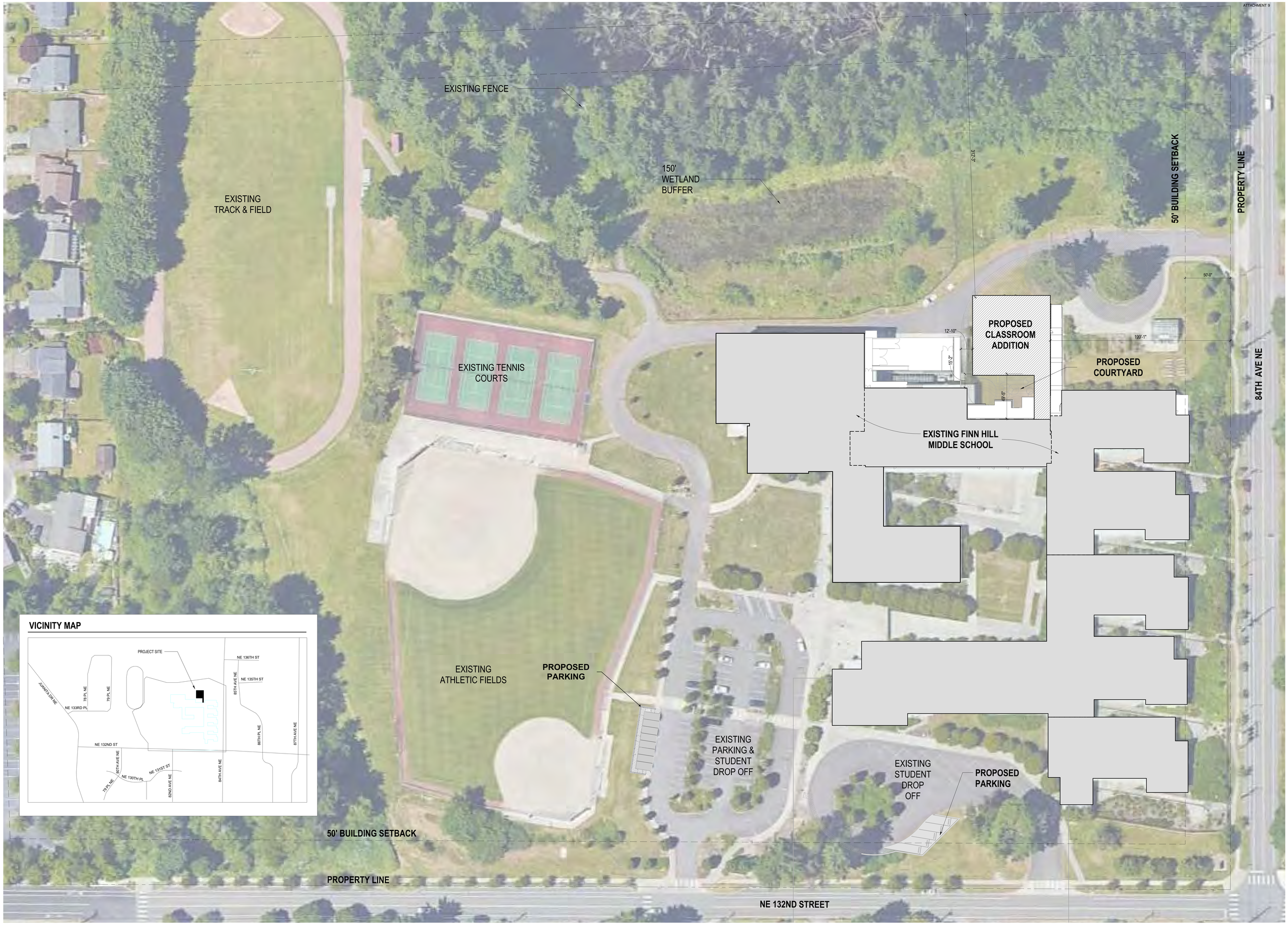

1 SITE PLAN - OVERALL

SCALE: 1" = 30'-0"

0 30' 60' 90'

SCALE : 1" = 30'-0"

Appendix B

Turning Movement Counts

ALL TRAFFIC DATA SERVICES
(303) 216-2439
www.alltrafficdata.net

Location: 1 JUANITA DR NE & NE 132ND ST AM
Date: Thursday, October 6, 2022
Peak Hour: 07:30 AM - 08:30 AM

Peak Hour

Motorized Vehicles

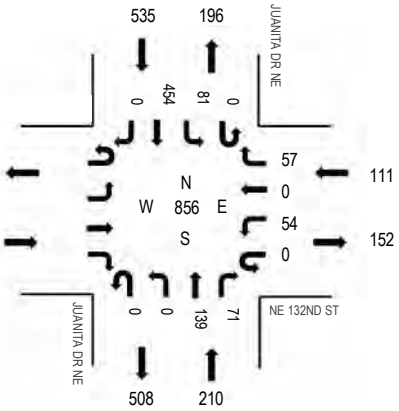

Heavy Vehicles

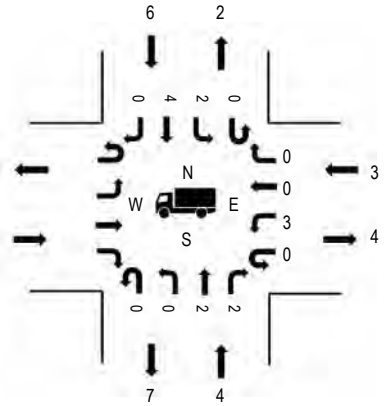

Pedestrians/Bicycles in Crosswalk

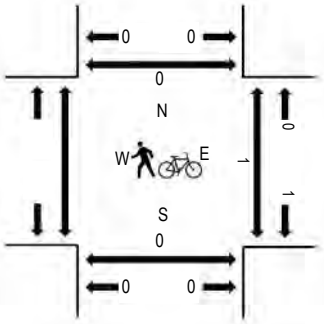

	HV%	PHF
EB		
WB	2.7%	0.54
NB	1.9%	0.78
SB	1.1%	0.97
All	1.5%	0.87

Traffic Counts - Motorized Vehicles

Interval Start Time	Eastbound				NE 132ND ST Westbound				JUANITA DR NE Northbound				JUANITA DR NE Southbound				Total	Rolling Hour
	U-Turn	Left	Thru	Right	U-Turn	Left	Thru	Right	U-Turn	Left	Thru	Right	U-Turn	Left	Thru	Right		
7:00 AM					0	7	0	7	0	0	23	5	0	11	62	0	115	646
7:15 AM					0	3	0	5	0	0	21	12	0	20	78	0	139	749
7:30 AM					0	7	0	13	0	0	24	13	0	20	115	0	192	856
7:45 AM					0	7	0	12	0	0	39	8	0	16	118	0	200	831
8:00 AM					0	9	0	12	0	0	39	20	0	23	115	0	218	790
8:15 AM					0	31	0	20	0	0	37	30	0	22	106	0	246	
8:30 AM					0	6	0	8	0	0	51	8	0	7	87	0	167	
8:45 AM					0	8	0	11	0	0	46	5	0	9	80	0	159	
Count Total					0	78	0	88	0	0	280	101	0	128	761	0	1,436	
Peak Hour					0	54	0	57	0	0	139	71	0	81	454	0	856	

Traffic Counts - Heavy Vehicles, Bicycles on Road, and Pedestrians/Bicycles in Crosswalk

Interval Start Time	Heavy Vehicles					Interval Start Time	Bicycles on Roadway					Interval Start Time	Pedestrians/Bicycles on Crosswalk				
	EB	NB	WB	SB	Total		EB	NB	WB	SB	Total		EB	NB	WB	SB	Total
7:00 AM		0	1	3	4	7:00 AM		0	0	0	0	7:00 AM		0	0	0	0
7:15 AM		0	0	2	2	7:15 AM		0	0	2	2	7:15 AM		0	0	0	0
7:30 AM		0	0	0	0	7:30 AM		1	0	1	2	7:30 AM		0	1	0	1
7:45 AM		0	1	1	2	7:45 AM		0	0	2	2	7:45 AM		0	0	0	0
8:00 AM		4	0	3	7	8:00 AM		0	0	0	0	8:00 AM		0	0	0	0
8:15 AM		0	2	2	4	8:15 AM		0	1	0	1	8:15 AM		0	0	0	0
8:30 AM		1	0	0	1	8:30 AM		0	0	2	2	8:30 AM		0	0	0	0
8:45 AM		1	2	1	4	8:45 AM		0	0	0	0	8:45 AM		1	1	0	2
Count Total		6	6	12	24	Count Total		1	1	7	9	Count Total		1	2	0	3
Peak Hour		4	3	6	13	Peak Hour		1	1	3	5	Peak Hour		0	1	0	1

ALL TRAFFIC DATA SERVICES
(303) 216-2439
www.alltrafficdata.net

Location: 2 Juanita Dr NE & NE 132nd St AM
Date: Tuesday, May 10, 2022
Peak Hour: 08:00 AM - 09:00 AM

Peak Hour

Motorized Vehicles

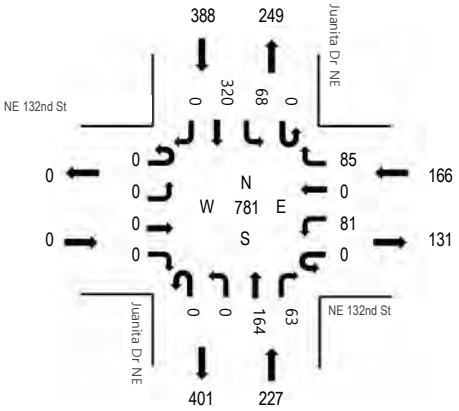

Heavy Vehicles

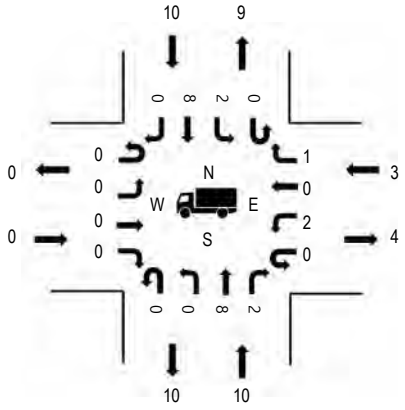

Pedestrians/Bicycles in Crosswalk

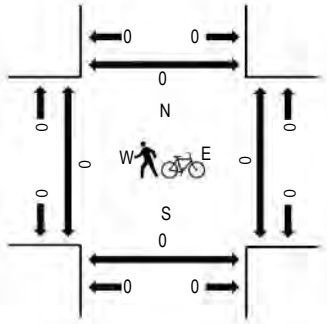

	HV%	PHF
EB	0.0%	0.00
WB	1.8%	0.62
NB	4.4%	0.77
SB	2.6%	0.84
All	2.9%	0.76

Traffic Counts - Motorized Vehicles

Interval Start Time	NE 132nd St Eastbound				NE 132nd St Westbound				Juanita Dr NE Northbound				Juanita Dr NE Southbound					Rolling Hour
	U-Turn	Left	Thru	Right	U-Turn	Left	Thru	Right	U-Turn	Left	Thru	Right	U-Turn	Left	Thru	Right	Total	
8:00 AM	0	0	0	0	0	19	0	9	0	0	32	15	0	12	83	0	170	781
8:15 AM	0	0	0	0	0	32	0	35	0	0	45	29	0	31	85	0	257	
8:30 AM	0	0	0	0	0	23	0	27	0	0	50	10	0	15	81	0	206	
8:45 AM	0	0	0	0	0	7	0	14	0	0	37	9	0	10	71	0	148	
Count Total	0	0	0	0	0	81	0	85	0	0	164	63	0	68	320	0	781	
Peak Hour	0	0	0	0	0	81	0	85	0	0	164	63	0	68	320	0	781	

Traffic Counts - Heavy Vehicles, Bicycles on Road, and Pedestrians/Bicycles in Crosswalk

Interval Start Time	Heavy Vehicles					Interval Start Time	Bicycles on Roadway					Interval Start Time	Pedestrians/Bicycles on Crosswalk				
	EB	NB	WB	SB	Total		EB	NB	WB	SB	Total		EB	NB	WB	SB	Total
8:00 AM	0	3	1	2	6	8:00 AM	0	0	0	0	0	8:00 AM	0	0	0	0	0
8:15 AM	0	2	0	4	6	8:15 AM	0	0	0	0	0	8:15 AM	0	0	0	0	0
8:30 AM	0	4	0	1	5	8:30 AM	0	0	0	0	0	8:30 AM	0	0	0	0	0
8:45 AM	0	1	2	3	6	8:45 AM	0	0	0	0	0	8:45 AM	0	0	0	0	0
Count Total	0	10	3	10	23	Count Total	0	0	0	0	0	Count Total	0	0	0	0	0
Peak Hour	0	10	3	10	23	Peak Hour	0	0	0	0	0	Peak Hour	0	0	0	0	0

(303) 216-2439
www.alltrafficdata.net

Location: 5 84th Ave NE & NE 132nd St AM
Date: Tuesday, May 10, 2022
Peak Hour: 08:00 AM - 09:00 AM

Peak Hour

Motorized Vehicles

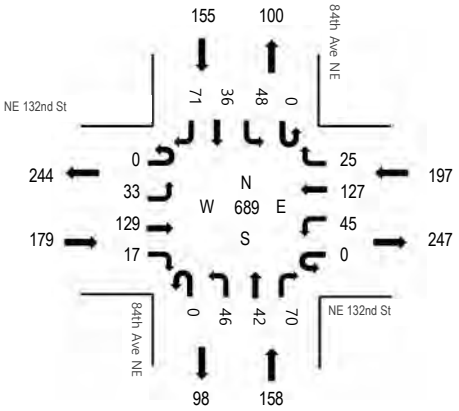

Heavy Vehicles

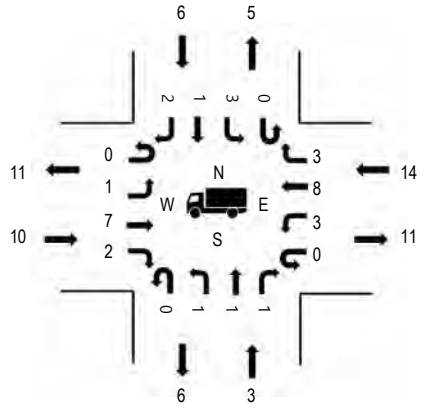

Pedestrians/Bicycles in Crosswalk

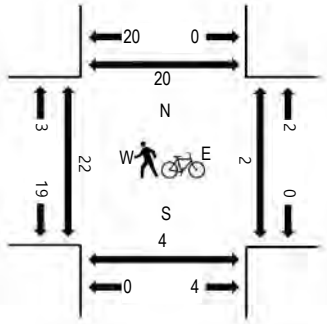

	HV%	PHF
EB	5.6%	0.66
WB	7.1%	0.62
NB	1.9%	0.66
SB	3.9%	0.50
All	4.8%	0.64

Traffic Counts - Motorized Vehicles

Interval Start Time	NE 132nd St Eastbound				NE 132nd St Westbound				84th Ave NE Northbound				84th Ave NE Southbound					Rolling Hour
	U-Turn	Left	Thru	Right	U-Turn	Left	Thru	Right	U-Turn	Left	Thru	Right	U-Turn	Left	Thru	Right	Total	
8:00 AM	0	10	25	2	0	18	26	9	0	4	16	20	0	16	5	14	165	689
8:15 AM	0	7	44	4	0	7	65	7	0	33	13	14	0	23	16	38	271	
8:30 AM	0	14	44	10	0	9	19	3	0	8	8	18	0	8	10	17	168	
8:45 AM	0	2	16	1	0	11	17	6	0	1	5	18	0	1	5	2	85	
Count Total	0	33	129	17	0	45	127	25	0	46	42	70	0	48	36	71	689	
Peak Hour	0	33	129	17	0	45	127	25	0	46	42	70	0	48	36	71	689	

Traffic Counts - Heavy Vehicles, Bicycles on Road, and Pedestrians/Bicycles in Crosswalk

Interval Start Time	Heavy Vehicles					Interval Start Time	Bicycles on Roadway					Interval Start Time	Pedestrians/Bicycles on Crosswalk				
	EB	NB	WB	SB	Total		EB	NB	WB	SB	Total		EB	NB	WB	SB	Total
8:00 AM	0	1	5	2	8	8:00 AM	0	0	0	0	0	8:00 AM	5	0	1	4	10
8:15 AM	4	1	5	2	12	8:15 AM	0	0	0	0	0	8:15 AM	14	3	0	15	32
8:30 AM	5	1	4	2	12	8:30 AM	0	0	0	0	0	8:30 AM	2	1	1	1	5
8:45 AM	1	0	0	0	1	8:45 AM	0	0	0	0	0	8:45 AM	1	0	0	0	1
Count Total	10	3	14	6	33	Count Total	0	0	0	0	0	Count Total	22	4	2	20	48
Peak Hour	10	3	14	6	33	Peak Hour	0	0	0	0	0	Peak Hour	22	4	2	20	48

ALL TRAFFIC DATA SERVICES
(303) 216-2439
www.alltrafficdata.net

Location: 3 82nd Ave NE & NE 132nd St AM
Date: Tuesday, May 10, 2022
Peak Hour: 08:00 AM - 09:00 AM

Peak Hour

Motorized Vehicles

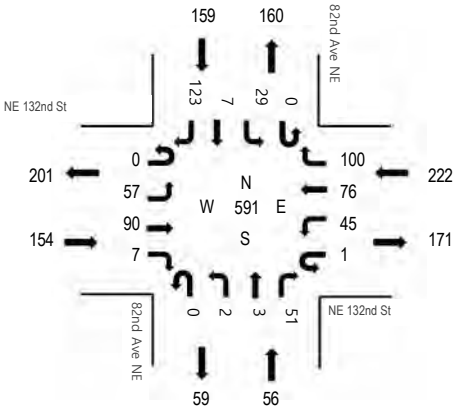

Heavy Vehicles

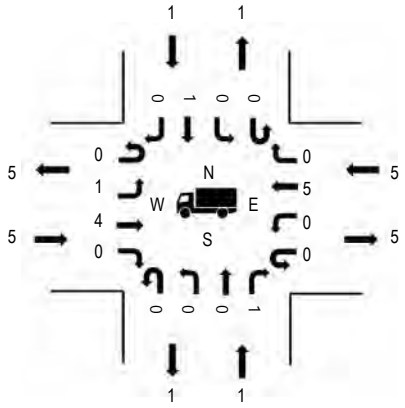

Pedestrians/Bicycles in Crosswalk

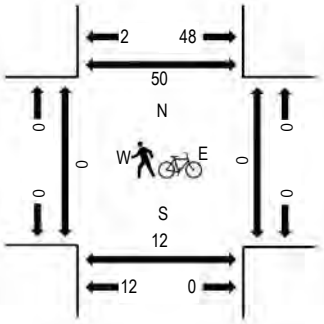

	HV%	PHF
EB	3.2%	0.52
WB	2.3%	0.50
NB	1.8%	0.54
SB	0.6%	0.58
All	2.0%	0.53

Traffic Counts - Motorized Vehicles

Interval Start Time	NE 132nd St Eastbound				NE 132nd St Westbound				82nd Ave NE Northbound				82nd Ave NE Southbound					Rolling Hour
	U-Turn	Left	Thru	Right	U-Turn	Left	Thru	Right	U-Turn	Left	Thru	Right	U-Turn	Left	Thru	Right	Total	
8:00 AM	0	6	24	0	0	4	14	20	0	1	1	4	0	9	2	12	97	591
8:15 AM	0	41	27	6	0	27	28	55	0	0	1	25	0	2	0	67	279	
8:30 AM	0	9	21	0	1	14	19	22	0	1	1	21	0	16	5	43	173	
8:45 AM	0	1	18	1	0	0	15	3	0	0	0	1	0	2	0	1	42	
Count Total	0	57	90	7	1	45	76	100	0	2	3	51	0	29	7	123	591	
Peak Hour	0	57	90	7	1	45	76	100	0	2	3	51	0	29	7	123	591	

Traffic Counts - Heavy Vehicles, Bicycles on Road, and Pedestrians/Bicycles in Crosswalk

Interval Start Time	Heavy Vehicles					Interval Start Time	Bicycles on Roadway					Interval Start Time	Pedestrians/Bicycles on Crosswalk				
	EB	NB	WB	SB	Total		EB	NB	WB	SB	Total		EB	NB	WB	SB	Total
8:00 AM	2	0	2	1	5	8:00 AM	0	0	0	0	0	8:00 AM	0	3	0	8	11
8:15 AM	1	0	0	0	1	8:15 AM	0	0	0	0	0	8:15 AM	0	5	0	30	35
8:30 AM	1	1	3	0	5	8:30 AM	0	0	0	0	0	8:30 AM	0	4	0	12	16
8:45 AM	1	0	0	0	1	8:45 AM	0	0	0	0	0	8:45 AM	0	0	0	0	0
Count Total	5	1	5	1	12	Count Total	0	0	0	0	0	Count Total	0	12	0	50	62
Peak Hour	5	1	5	1	12	Peak Hour	0	0	0	0	0	Peak Hour	0	12	0	50	62

ALL TRAFFIC DATA SERVICES
(303) 216-2439
www.alltrafficdata.net

Location: 3 82nd Ave NE & NE 132nd St AM
Date: Thursday, May 12, 2022
Peak Hour: 08:00 AM - 09:00 AM

Peak Hour

Motorized Vehicles

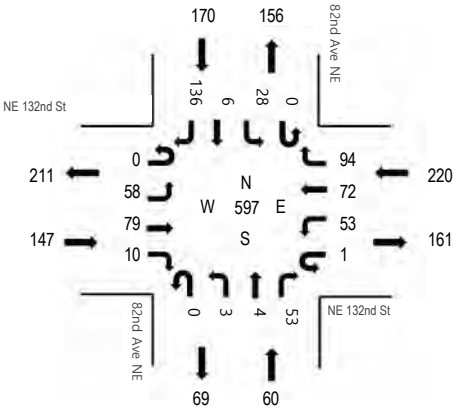

Heavy Vehicles

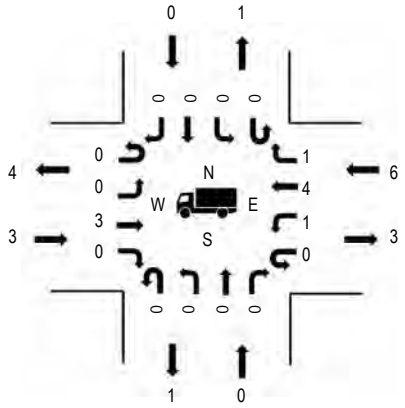

Pedestrians/Bicycles in Crosswalk

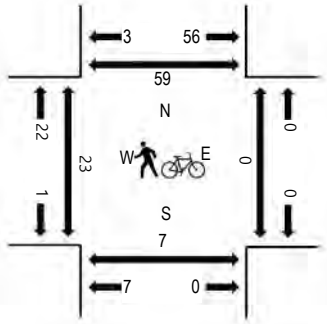

	HV%	PHF
EB	2.0%	0.53
WB	2.7%	0.53
NB	0.0%	0.56
SB	0.0%	0.62
All	1.5%	0.56

Traffic Counts - Motorized Vehicles

Interval Start Time	NE 132nd St Eastbound				NE 132nd St Westbound				82nd Ave NE Northbound				82nd Ave NE Southbound					Rolling Hour
	U-Turn	Left	Thru	Right	U-Turn	Left	Thru	Right	U-Turn	Left	Thru	Right	U-Turn	Left	Thru	Right	Total	
8:00 AM	0	6	25	1	0	3	10	23	0	1	0	8	0	10	1	20	108	597
8:15 AM	0	45	21	3	0	26	26	51	0	0	2	25	0	0	2	67	268	
8:30 AM	0	5	24	5	0	23	24	14	0	1	1	16	0	15	2	43	173	
8:45 AM	0	2	9	1	1	1	12	6	0	1	1	4	0	3	1	6	48	
Count Total	0	58	79	10	1	53	72	94	0	3	4	53	0	28	6	136	597	
Peak Hour	0	58	79	10	1	53	72	94	0	3	4	53	0	28	6	136	597	

Traffic Counts - Heavy Vehicles and Pedestrians/Bicycles in Crosswalk

Interval Start Time	Heavy Vehicles					Interval Start Time	Pedestrians/Bicycles on Crosswalk				
	EB	NB	WB	SB	Total		EB	NB	WB	SB	Total
8:00 AM	1	0	0	0	1	8:00 AM	0	0	0	5	5
8:15 AM	1	0	0	0	1	8:15 AM	20	5	0	36	61
8:30 AM	1	0	2	0	3	8:30 AM	3	2	0	18	23
8:45 AM	0	0	4	0	4	8:45 AM	0	0	0	0	0
Count Total	3	0	6	0	9	Count Total	23	7	0	59	89
Peak Hour	3	0	6	0	9	Peak Hour	23	7	0	59	89

ALL TRAFFIC DATA SERVICES
(303) 216-2439
www.alltrafficdata.net

Location: 4 East Site Access & NE 132nd St AM
Date: Tuesday, May 10, 2022
Peak Hour: 08:00 AM - 09:00 AM

Peak Hour

Motorized Vehicles

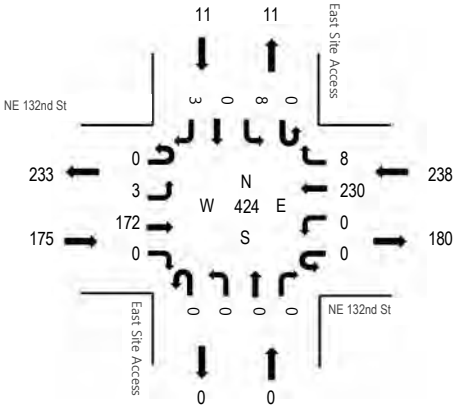

Heavy Vehicles

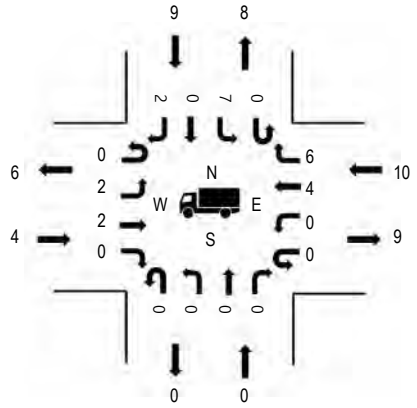

Pedestrians/Bicycles in Crosswalk

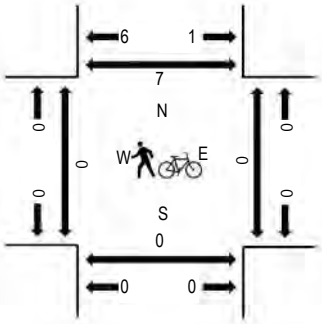

	HV%	PHF
EB	2.3%	0.66
WB	4.2%	0.46
NB	0.0%	0.00
SB	81.8%	0.69
All	5.4%	0.58

Traffic Counts - Motorized Vehicles

Interval Start Time	NE 132nd St Eastbound				NE 132nd St Westbound				East Site Access Northbound				East Site Access Southbound					Rolling Hour
	U-Turn	Left	Thru	Right	U-Turn	Left	Thru	Right	U-Turn	Left	Thru	Right	U-Turn	Left	Thru	Right	Total	
8:00 AM	0	2	36	0	0	0	43	3	0	0	0	0	0	1	0	1	86	424
8:15 AM	0	1	49	0	0	0	124	4	0	0	0	0	0	4	0	0	182	
8:30 AM	0	0	66	0	0	0	45	1	0	0	0	0	0	3	0	0	115	
8:45 AM	0	0	21	0	0	0	18	0	0	0	0	0	0	0	0	2	41	
Count Total	0	3	172	0	0	0	230	8	0	0	0	0	0	8	0	3	424	
Peak Hour	0	3	172	0	0	0	230	8	0	0	0	0	0	8	0	3	424	

Traffic Counts - Heavy Vehicles, Bicycles on Road, and Pedestrians/Bicycles in Crosswalk

Interval Start Time	Heavy Vehicles					Interval Start Time	Bicycles on Roadway					Interval Start Time	Pedestrians/Bicycles on Crosswalk				
	EB	NB	WB	SB	Total		EB	NB	WB	SB	Total		EB	NB	WB	SB	Total
8:00 AM	1	0	4	0	5	8:00 AM	0	0	0	0	0	8:00 AM	0	0	0	1	1
8:15 AM	1	0	4	4	9	8:15 AM	0	0	0	1	1	8:15 AM	0	0	0	2	2
8:30 AM	1	0	2	3	6	8:30 AM	0	0	0	0	0	8:30 AM	0	0	0	4	4
8:45 AM	1	0	0	2	3	8:45 AM	0	0	0	0	0	8:45 AM	0	0	0	0	0
Count Total	4	0	10	9	23	Count Total	0	0	0	1	1	Count Total	0	0	0	7	7
Peak Hour	4	0	10	9	23	Peak Hour	0	0	0	1	1	Peak Hour	0	0	0	7	7

ALL TRAFFIC DATA SERVICES
(303) 216-2439
www.alltrafficdata.net

Location: 4 East Site Access & NE 132nd St AM
Date: Thursday, May 12, 2022
Peak Hour: 08:00 AM - 09:00 AM

Peak Hour

Motorized Vehicles

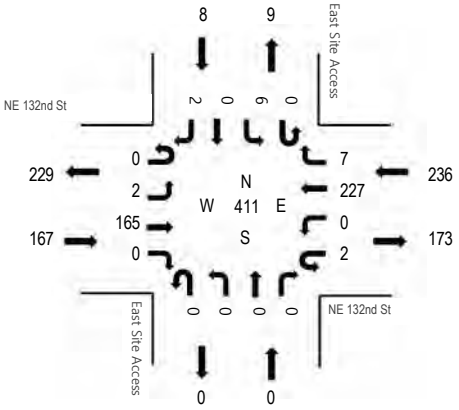

Heavy Vehicles

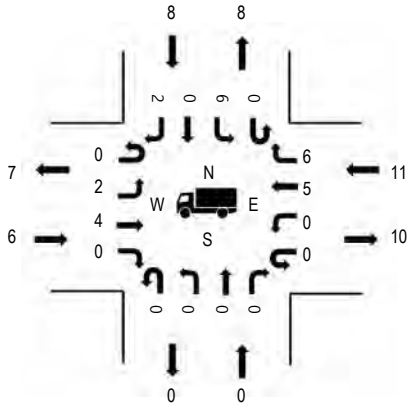

Pedestrians/Bicycles in Crosswalk

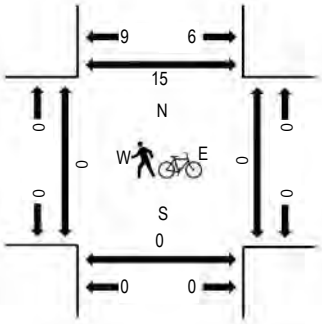

	HV%	PHF
EB	3.6%	0.75
WB	4.7%	0.49
NB	0.0%	0.00
SB	100.0%	0.67
All	6.1%	0.61

Traffic Counts - Motorized Vehicles

Interval Start Time	NE 132nd St Eastbound				NE 132nd St Westbound				East Site Access Northbound				East Site Access Southbound					Rolling Hour
	U-Turn	Left	Thru	Right	U-Turn	Left	Thru	Right	U-Turn	Left	Thru	Right	U-Turn	Left	Thru	Right	Total	
8:00 AM	0	1	44	0	0	0	45	1	0	0	0	0	0	0	0	0	91	411
8:15 AM	0	1	45	0	0	0	116	4	0	0	0	0	0	3	0	0	169	
8:30 AM	0	0	56	0	2	0	49	1	0	0	0	0	0	3	0	0	111	
8:45 AM	0	0	20	0	0	0	17	1	0	0	0	0	0	0	0	2	40	
Count Total	0	2	165	0	2	0	227	7	0	0	0	0	0	6	0	2	411	
Peak Hour	0	2	165	0	2	0	227	7	0	0	0	0	0	6	0	2	411	

Traffic Counts - Heavy Vehicles, Bicycles on Road, and Pedestrians/Bicycles in Crosswalk

Interval Start Time	Heavy Vehicles					Interval Start Time	Bicycles on Roadway					Interval Start Time	Pedestrians/Bicycles on Crosswalk				
	EB	NB	WB	SB	Total		EB	NB	WB	SB	Total		EB	NB	WB	SB	Total
8:00 AM	1	0	1	0	2	8:00 AM	0	0	0	0	0	8:00 AM	0	0	0	2	2
8:15 AM	1	0	5	3	9	8:15 AM	0	0	0	0	0	8:15 AM	0	0	0	8	8
8:30 AM	3	0	3	3	9	8:30 AM	0	0	0	0	0	8:30 AM	0	0	0	5	5
8:45 AM	1	0	2	2	5	8:45 AM	0	0	0	0	0	8:45 AM	0	0	0	0	0
Count Total	6	0	11	8	25	Count Total	0	0	0	0	0	Count Total	0	0	0	15	15
Peak Hour	6	0	11	8	25	Peak Hour	0	0	0	0	0	Peak Hour	0	0	0	15	15

ALL TRAFFIC DATA SERVICES
(303) 216-2439
www.alltrafficdata.net

Location: 1 84th Ave & Site Access AM
Date: Tuesday, May 10, 2022
Peak Hour: 08:00 AM - 09:00 AM

Peak Hour

Motorized Vehicles

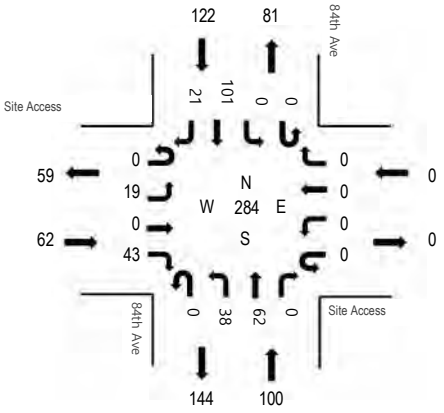

Heavy Vehicles

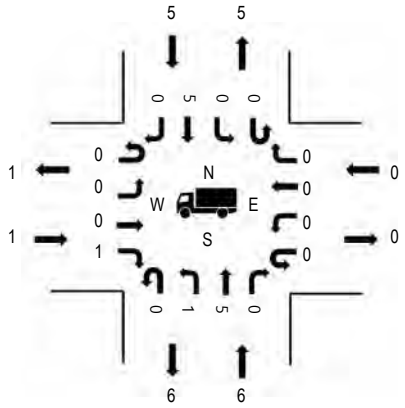

Pedestrians/Bicycles in Crosswalk

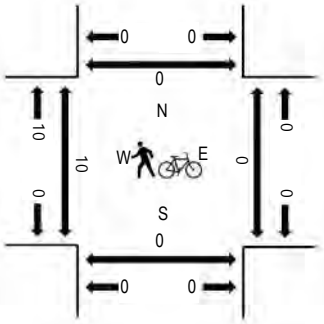

	HV%	PHF
EB	1.6%	0.36
WB	0.0%	0.00
NB	6.0%	0.74
SB	4.1%	0.44
All	4.2%	0.49

Traffic Counts - Motorized Vehicles

Interval Start Time	Site Access Eastbound				Site Access Westbound				84th Ave Northbound				84th Ave Southbound					Rolling Hour
	U-Turn	Left	Thru	Right	U-Turn	Left	Thru	Right	U-Turn	Left	Thru	Right	U-Turn	Left	Thru	Right	Total	
8:00 AM	0	4	0	13	0	0	0	0	0	16	18	0	0	0	24	6	81	284
8:15 AM	0	14	0	29	0	0	0	0	0	21	12	0	0	0	55	15	146	
8:30 AM	0	1	0	1	0	0	0	0	0	1	24	0	0	0	19	0	46	
8:45 AM	0	0	0	0	0	0	0	0	0	0	8	0	0	0	3	0	11	
Count Total	0	19	0	43	0	0	0	0	0	38	62	0	0	0	101	21	284	
Peak Hour	0	19	0	43	0	0	0	0	0	38	62	0	0	0	101	21	284	

Traffic Counts - Heavy Vehicles, Bicycles on Road, and Pedestrians/Bicycles in Crosswalk

Interval Start Time	Heavy Vehicles					Interval Start Time	Bicycles on Roadway					Interval Start Time	Pedestrians/Bicycles on Crosswalk				
	EB	NB	WB	SB	Total		EB	NB	WB	SB	Total		EB	NB	WB	SB	Total
8:00 AM	0	1	0	2	3	8:00 AM	0	0	0	0	0	8:00 AM	4	0	0	0	4
8:15 AM	0	3	0	2	5	8:15 AM	0	0	0	0	0	8:15 AM	6	0	0	0	6
8:30 AM	1	1	0	1	3	8:30 AM	0	0	0	0	0	8:30 AM	0	0	0	0	0
8:45 AM	0	1	0	0	1	8:45 AM	0	0	0	0	0	8:45 AM	0	0	0	0	0
Count Total	1	6	0	5	12	Count Total	0	0	0	0	0	Count Total	10	0	0	0	10
Peak Hour	1	6	0	5	12	Peak Hour	0	0	0	0	0	Peak Hour	10	0	0	0	10

(303) 216-2439
www.alltrafficdata.net

Location: 2 Juanita Dr NE & NE 132nd St PM
Date: Tuesday, May 10, 2022
Peak Hour: 02:30 PM - 03:30 PM

Peak Hour

Motorized Vehicles

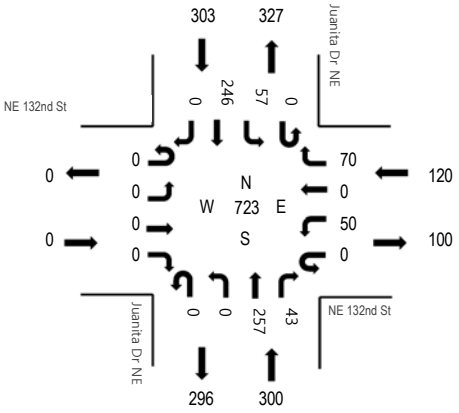

Heavy Vehicles

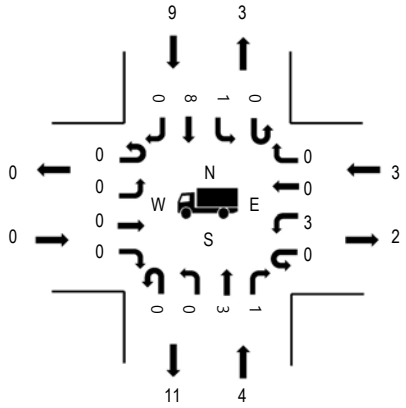

Pedestrians/Bicycles in Crosswalk

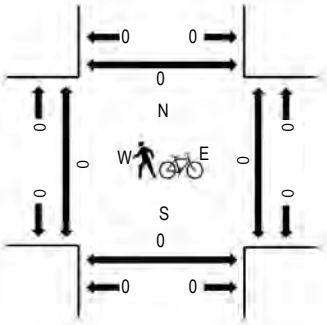

	HV%	PHF
EB	0.0%	0.00
WB	2.5%	0.64
NB	1.3%	0.91
SB	3.0%	0.84
All	2.2%	0.92

Traffic Counts - Motorized Vehicles

Interval Start Time	NE 132nd St Eastbound				NE 132nd St Westbound				Juanita Dr NE Northbound				Juanita Dr NE Southbound				Total	Rolling Hour
	U-Turn	Left	Thru	Right	U-Turn	Left	Thru	Right	U-Turn	Left	Thru	Right	U-Turn	Left	Thru	Right		
2:30 PM	0	0	0	0	0	4	0	12	0	0	59	7	0	10	48	0	140	723
2:45 PM	0	0	0	0	0	5	0	16	0	0	65	17	0	17	73	0	193	
3:00 PM	0	0	0	0	0	23	0	24	0	0	60	10	0	18	62	0	197	
3:15 PM	0	0	0	0	0	18	0	18	0	0	73	9	0	12	63	0	193	
Count Total	0	0	0	0	0	50	0	70	0	0	257	43	0	57	246	0	723	
Peak Hour	0	0	0	0	0	50	0	70	0	0	257	43	0	57	246	0	723	

Traffic Counts - Heavy Vehicles, Bicycles on Road, and Pedestrians/Bicycles in Crosswalk

Interval Start Time	Heavy Vehicles					Interval Start Time	Bicycles on Roadway					Interval Start Time	Pedestrians/Bicycles on Crosswalk				
	EB	NB	WB	SB	Total		EB	NB	WB	SB	Total		EB	NB	WB	SB	Total
2:30 PM	0	0	0	2	2	2:30 PM	0	1	0	0	1	2:30 PM	0	0	0	0	0
2:45 PM	0	1	1	1	3	2:45 PM	0	1	0	0	1	2:45 PM	0	0	0	0	0
3:00 PM	0	2	1	5	8	3:00 PM	0	2	0	0	2	3:00 PM	0	0	0	0	0
3:15 PM	0	1	1	1	3	3:15 PM	0	1	0	0	1	3:15 PM	0	0	0	0	0
Count Total	0	4	3	9	16	Count Total	0	5	0	0	5	Count Total	0	0	0	0	0
Peak Hour	0	4	3	9	16	Peak Hour	0	5	0	0	5	Peak Hour	0	0	0	0	0

(303) 216-2439
www.alltrafficdata.net

Location: 1 84th Ave & Site Access AM
Date: Thursday, May 12, 2022
Peak Hour: 08:00 AM - 09:00 AM

Peak Hour

Motorized Vehicles

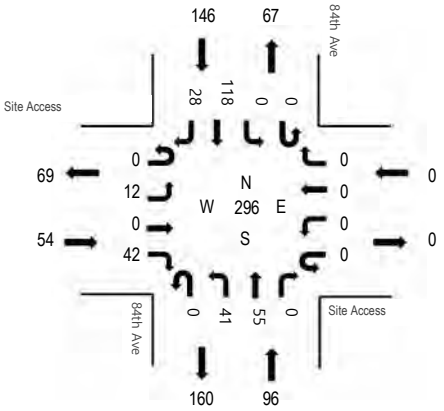

Heavy Vehicles

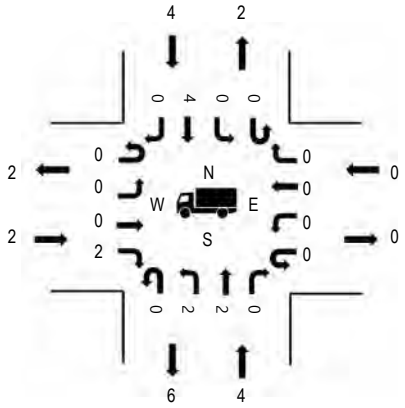

Pedestrians/Bicycles in Crosswalk

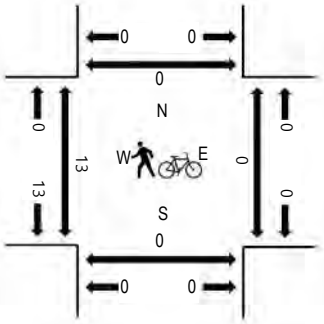

	HV%	PHF
EB	3.7%	0.56
WB	0.0%	0.00
NB	4.2%	0.69
SB	2.7%	0.49
All	3.4%	0.58

Traffic Counts - Motorized Vehicles

Interval Start Time	Site Access Eastbound				Site Access Westbound				84th Ave Northbound				84th Ave Southbound				Total	Rolling Hour
	U-Turn	Left	Thru	Right	U-Turn	Left	Thru	Right	U-Turn	Left	Thru	Right	U-Turn	Left	Thru	Right		
8:00 AM	0	4	0	20	0	0	0	0	0	19	9	0	0	0	23	8	83	296
8:15 AM	0	7	0	12	0	0	0	0	0	19	16	0	0	0	58	16	128	
8:30 AM	0	1	0	9	0	0	0	0	0	3	19	0	0	0	20	3	55	
8:45 AM	0	0	0	1	0	0	0	0	0	0	11	0	0	0	17	1	30	
Count Total	0	12	0	42	0	0	0	0	0	41	55	0	0	0	118	28	296	
Peak Hour	0	12	0	42	0	0	0	0	0	41	55	0	0	0	118	28	296	

Traffic Counts - Heavy Vehicles, Bicycles on Road, and Pedestrians/Bicycles in Crosswalk

Interval Start Time	Heavy Vehicles					Interval Start Time	Bicycles on Roadway					Interval Start Time	Pedestrians/Bicycles on Crosswalk				
	EB	NB	WB	SB	Total		EB	NB	WB	SB	Total		EB	NB	WB	SB	Total
8:00 AM	0	1	0	1	2	8:00 AM	0	0	0	0	0	8:00 AM	4	0	0	0	4
8:15 AM	0	1	0	1	2	8:15 AM	0	0	0	3	3	8:15 AM	9	0	0	0	9
8:30 AM	1	1	0	1	3	8:30 AM	0	0	0	0	0	8:30 AM	0	0	0	0	0
8:45 AM	1	1	0	1	3	8:45 AM	0	0	0	0	0	8:45 AM	0	0	0	0	0
Count Total	2	4	0	4	10	Count Total	0	0	0	3	3	Count Total	13	0	0	0	13
Peak Hour	2	4	0	4	10	Peak Hour	0	0	0	3	3	Peak Hour	13	0	0	0	13

ALL TRAFFIC DATA SERVICES
(303) 216-2439
www.alltrafficdata.net

Location: 5 84th Ave NE & NE 132nd St PM
Date: Tuesday, May 10, 2022
Peak Hour: 02:30 PM - 03:30 PM

Peak Hour

Motorized Vehicles

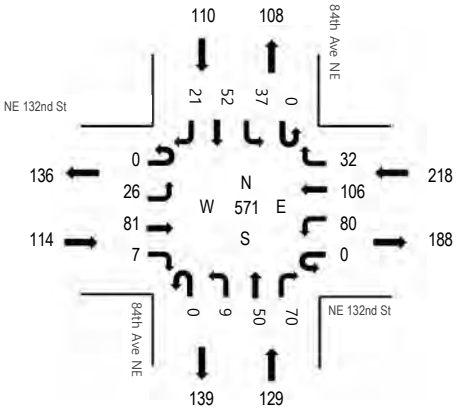

Heavy Vehicles

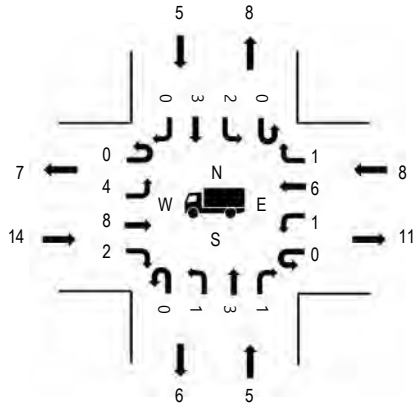

Pedestrians/Bicycles in Crosswalk

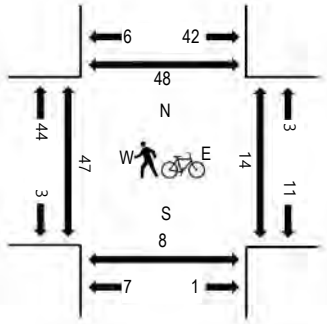

	HV%	PHF
EB	12.3%	0.68
WB	3.7%	0.72
NB	3.9%	0.90
SB	4.5%	0.59
All	5.6%	0.83

Traffic Counts - Motorized Vehicles

Interval Start Time	NE 132nd St Eastbound				NE 132nd St Westbound				84th Ave NE Northbound				84th Ave NE Southbound					Rolling Hour
	U-Turn	Left	Thru	Right	U-Turn	Left	Thru	Right	U-Turn	Left	Thru	Right	U-Turn	Left	Thru	Right	Total	
2:30 PM	0	2	11	1	0	13	23	5	0	3	14	13	0	2	4	4	95	571
2:45 PM	0	9	13	1	0	21	40	15	0	3	12	17	0	3	8	7	149	
3:00 PM	0	10	31	1	0	25	27	7	0	1	16	19	0	15	15	5	172	
3:15 PM	0	5	26	4	0	21	16	5	0	2	8	21	0	17	25	5	155	
Count Total	0	26	81	7	0	80	106	32	0	9	50	70	0	37	52	21	571	
Peak Hour	0	26	81	7	0	80	106	32	0	9	50	70	0	37	52	21	571	

Traffic Counts - Heavy Vehicles, Bicycles on Road, and Pedestrians/Bicycles in Crosswalk

Interval Start Time	Heavy Vehicles					Interval Start Time	Bicycles on Roadway					Interval Start Time	Pedestrians/Bicycles on Crosswalk				
	EB	NB	WB	SB	Total		EB	NB	WB	SB	Total		EB	NB	WB	SB	Total
2:30 PM	0	2	1	2	5	2:30 PM	0	0	0	0	0	2:30 PM	6	3	0	2	11
2:45 PM	0	0	2	2	4	2:45 PM	0	0	0	0	0	2:45 PM	2	2	4	1	9
3:00 PM	11	1	5	0	17	3:00 PM	0	0	0	0	0	3:00 PM	30	3	9	28	70
3:15 PM	3	2	0	1	6	3:15 PM	0	0	0	0	0	3:15 PM	9	0	1	17	27
Count Total	14	5	8	5	32	Count Total	0	0	0	0	0	Count Total	47	8	14	48	117
Peak Hour	14	5	8	5	32	Peak Hour	0	0	0	0	0	Peak Hour	47	8	14	48	117

ALL TRAFFIC DATA SERVICES
(303) 216-2439
www.alltrafficdata.net

Location: 3 82nd Ave NE & NE 132nd St PM
Date: Tuesday, May 10, 2022
Peak Hour: 02:30 PM - 03:30 PM

Peak Hour

Motorized Vehicles

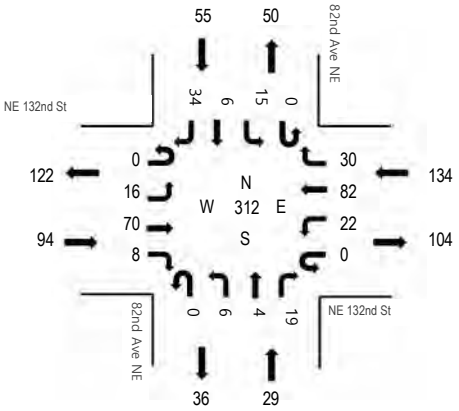

Heavy Vehicles

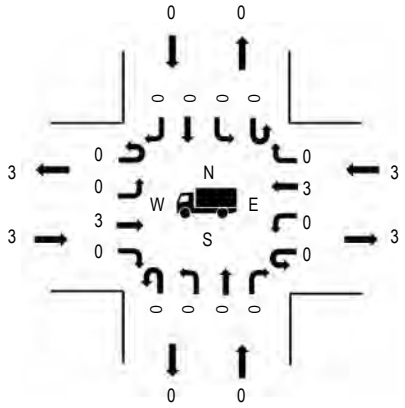

Pedestrians/Bicycles in Crosswalk

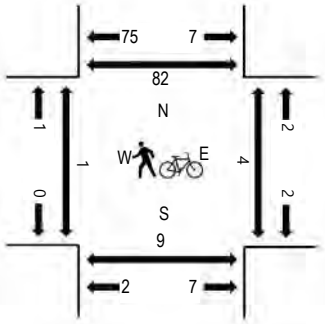

	HV%	PHF
EB	3.2%	0.78
WB	2.2%	0.80
NB	0.0%	0.56
SB	0.0%	0.55
All	1.9%	0.72

Traffic Counts - Motorized Vehicles

Interval Start Time	NE 132nd St Eastbound				NE 132nd St Westbound				82nd Ave NE Northbound				82nd Ave NE Southbound					Rolling Hour
	U-Turn	Left	Thru	Right	U-Turn	Left	Thru	Right	U-Turn	Left	Thru	Right	U-Turn	Left	Thru	Right	Total	
2:30 PM	0	4	14	0	0	1	16	11	0	0	1	2	0	0	0	1	50	312
2:45 PM	0	4	18	3	0	9	24	8	0	3	0	3	0	1	0	4	77	
3:00 PM	0	4	22	4	0	8	28	6	0	3	2	8	0	6	5	13	109	
3:15 PM	0	4	16	1	0	4	14	5	0	0	1	6	0	8	1	16	76	
Count Total	0	16	70	8	0	22	82	30	0	6	4	19	0	15	6	34	312	
Peak Hour	0	16	70	8	0	22	82	30	0	6	4	19	0	15	6	34	312	

Traffic Counts - Heavy Vehicles, Bicycles on Road, and Pedestrians/Bicycles in Crosswalk

Interval Start Time	Heavy Vehicles					Interval Start Time	Bicycles on Roadway					Interval Start Time	Pedestrians/Bicycles on Crosswalk				
	EB	NB	WB	SB	Total		EB	NB	WB	SB	Total		EB	NB	WB	SB	Total
2:30 PM	0	0	0	0	0	2:30 PM	0	0	0	0	0	2:30 PM	1	2	1	3	7
2:45 PM	0	0	1	0	1	2:45 PM	0	0	0	0	0	2:45 PM	0	1	1	1	3
3:00 PM	1	0	2	0	3	3:00 PM	0	0	0	0	0	3:00 PM	0	6	0	72	78
3:15 PM	2	0	0	0	2	3:15 PM	0	0	0	0	0	3:15 PM	0	0	2	6	8
Count Total	3	0	3	0	6	Count Total	0	0	0	0	0	Count Total	1	9	4	82	96
Peak Hour	3	0	3	0	6	Peak Hour	0	0	0	0	0	Peak Hour	1	9	4	82	96

(303) 216-2439
www.alltrafficdata.net

Location: 3 82nd Ave NE & NE 132nd St PM
Date: Thursday, May 12, 2022
Peak Hour: 02:30 PM - 03:30 PM

Peak Hour

Motorized Vehicles

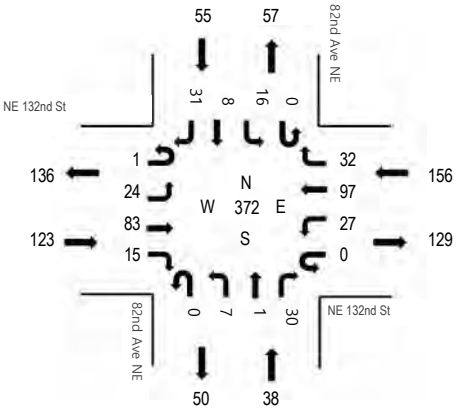

Heavy Vehicles

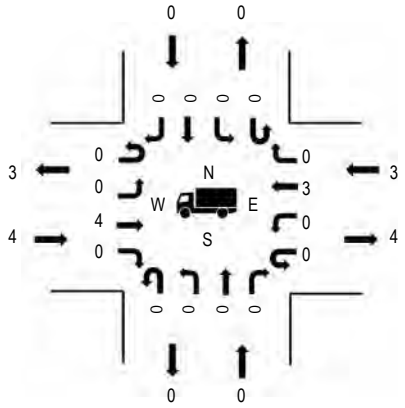

Pedestrians/Bicycles in Crosswalk

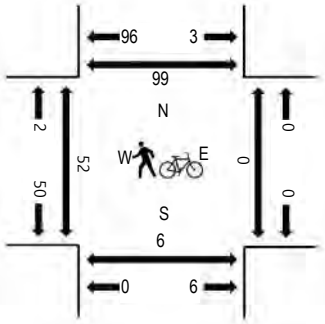

	HV%	PHF
EB	3.3%	0.72
WB	1.9%	0.81
NB	0.0%	0.53
SB	0.0%	0.34
All	1.9%	0.76

Traffic Counts - Motorized Vehicles

Interval Start Time	NE 132nd St Eastbound				NE 132nd St Westbound				82nd Ave NE Northbound				82nd Ave NE Southbound				Total	Rolling Hour
	U-Turn	Left	Thru	Right	U-Turn	Left	Thru	Right	U-Turn	Left	Thru	Right	U-Turn	Left	Thru	Right		
2:30 PM	1	2	9	1	0	5	10	9	0	1	1	2	0	2	0	1	44	372
2:45 PM	0	5	21	6	0	7	34	7	0	2	0	3	0	1	0	0	86	
3:00 PM	0	11	25	7	0	8	30	9	0	2	0	16	0	0	1	10	119	
3:15 PM	0	6	28	1	0	7	23	7	0	2	0	9	0	13	7	20	123	
Count Total	1	24	83	15	0	27	97	32	0	7	1	30	0	16	8	31	372	
Peak Hour	1	24	83	15	0	27	97	32	0	7	1	30	0	16	8	31	372	

Traffic Counts - Heavy Vehicles and Pedestrians/Bicycles in Crosswalk

Interval Start Time	Heavy Vehicles					Interval Start Time	Pedestrians/Bicycles on Crosswalk				
	EB	NB	WB	SB	Total		EB	NB	WB	SB	Total
2:30 PM	0	0	1	0	1	2:30 PM	0	0	0	1	1
2:45 PM	1	0	0	0	1	2:45 PM	0	0	0	0	0
3:00 PM	2	0	1	0	3	3:00 PM	50	6	0	95	151
3:15 PM	1	0	1	0	2	3:15 PM	2	0	0	3	5
Count Total	4	0	3	0	7	Count Total	52	6	0	99	157
Peak Hour	4	0	3	0	7	Peak Hour	52	6	0	99	157

ALL TRAFFIC DATA SERVICES
(303) 216-2439
www.alltrafficdata.net

Location: 4 East Site Access & NE 132nd St PM
Date: Tuesday, May 10, 2022
Peak Hour: 02:30 PM - 03:30 PM

Peak Hour

Motorized Vehicles

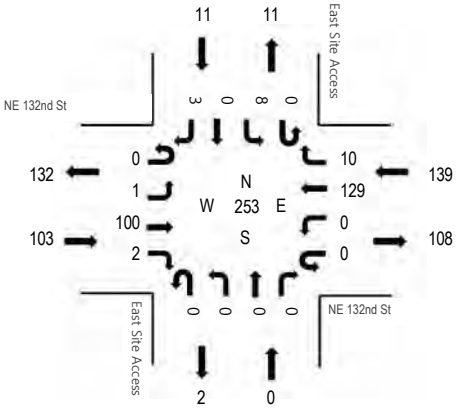

Heavy Vehicles

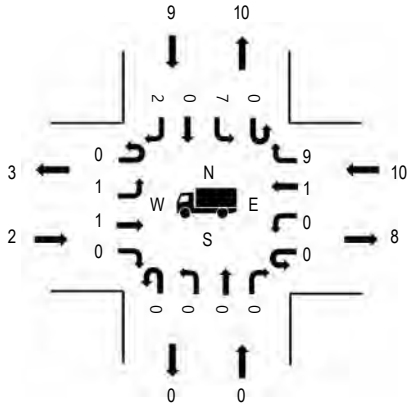

Pedestrians/Bicycles in Crosswalk

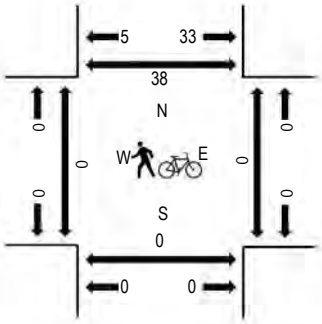

	HV%	PHF
EB	1.9%	0.68
WB	7.2%	0.70
NB	0.0%	0.00
SB	81.8%	0.34
All	8.3%	0.76

Traffic Counts - Motorized Vehicles

Interval Start Time	NE 132nd St Eastbound				NE 132nd St Westbound				East Site Access Northbound				East Site Access Southbound					Rolling Hour
	U-Turn	Left	Thru	Right	U-Turn	Left	Thru	Right	U-Turn	Left	Thru	Right	U-Turn	Left	Thru	Right	Total	
2:30 PM	0	0	13	0	0	0	28	1	0	0	0	0	0	0	0	0	42	253
2:45 PM	0	0	23	0	0	0	48	2	0	0	0	0	0	0	0	1	74	
3:00 PM	0	1	35	2	0	0	30	7	0	0	0	0	0	6	0	2	83	
3:15 PM	0	0	29	0	0	0	23	0	0	0	0	0	0	2	0	0	54	
Count Total	0	1	100	2	0	0	129	10	0	0	0	0	0	8	0	3	253	
Peak Hour	0	1	100	2	0	0	129	10	0	0	0	0	0	8	0	3	253	

Traffic Counts - Heavy Vehicles, Bicycles on Road, and Pedestrians/Bicycles in Crosswalk

Interval Start Time	Heavy Vehicles					Interval Start Time	Bicycles on Roadway					Interval Start Time	Pedestrians/Bicycles on Crosswalk				
	EB	NB	WB	SB	Total		EB	NB	WB	SB	Total		EB	NB	WB	SB	Total
2:30 PM	0	0	1	0	1	2:30 PM	0	0	0	0	0	2:30 PM	0	0	0	6	6
2:45 PM	0	0	1	1	2	2:45 PM	0	0	0	0	0	2:45 PM	0	0	0	1	1
3:00 PM	1	0	8	7	16	3:00 PM	0	0	0	1	1	3:00 PM	0	0	0	22	22
3:15 PM	1	0	0	1	2	3:15 PM	0	0	0	1	1	3:15 PM	0	0	0	9	9
Count Total	2	0	10	9	21	Count Total	0	0	0	2	2	Count Total	0	0	0	38	38
Peak Hour	2	0	10	9	21	Peak Hour	0	0	0	2	2	Peak Hour	0	0	0	38	38

(303) 216-2439
www.alltrafficdata.net

Location: 4 East Site Access & NE 132nd St PM
Date: Thursday, May 12, 2022
Peak Hour: 02:30 PM - 03:30 PM

Peak Hour

Motorized Vehicles

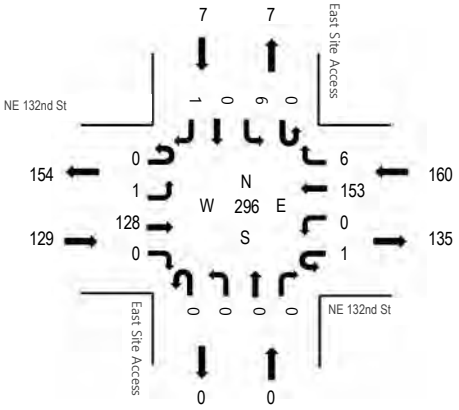

Heavy Vehicles

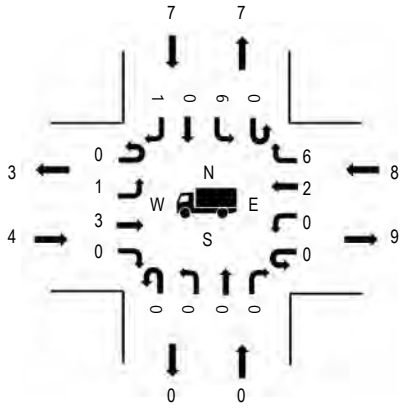

Pedestrians/Bicycles in Crosswalk

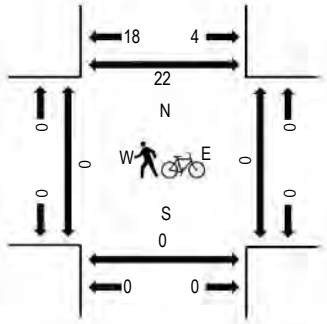

	HV%	PHF
EB	3.1%	0.62
WB	5.0%	0.62
NB	0.0%	0.00
SB	100.0%	0.35
All	6.4%	0.81

Traffic Counts - Motorized Vehicles

Interval Start Time	NE 132nd St Eastbound				NE 132nd St Westbound				East Site Access Northbound				East Site Access Southbound					Rolling Hour
	U-Turn	Left	Thru	Right	U-Turn	Left	Thru	Right	U-Turn	Left	Thru	Right	U-Turn	Left	Thru	Right	Total	
2:30 PM	0	0	14	0	0	0	26	0	0	0	0	0	0	0	0	0	40	296
2:45 PM	0	0	26	0	0	0	64	1	0	0	0	0	0	0	0	0	91	
3:00 PM	0	1	36	0	1	0	32	5	0	0	0	0	0	2	0	0	77	
3:15 PM	0	0	52	0	0	0	31	0	0	0	0	0	0	4	0	1	88	
Count Total	0	1	128	0	1	0	153	6	0	0	0	0	0	6	0	1	296	
Peak Hour	0	1	128	0	1	0	153	6	0	0	0	0	0	6	0	1	296	

Traffic Counts - Heavy Vehicles, Bicycles on Road, and Pedestrians/Bicycles in Crosswalk

Interval Start Time	Heavy Vehicles					Interval Start Time	Bicycles on Roadway					Interval Start Time	Pedestrians/Bicycles on Crosswalk				
	EB	NB	WB	SB	Total		EB	NB	WB	SB	Total		EB	NB	WB	SB	Total
2:30 PM	0	0	1	0	1	2:30 PM	0	0	0	0	0	2:30 PM	0	0	0	1	1
2:45 PM	1	0	1	0	2	2:45 PM	0	0	0	0	0	2:45 PM	0	0	0	0	0
3:00 PM	2	0	6	2	10	3:00 PM	0	0	0	0	0	3:00 PM	0	0	0	18	18
3:15 PM	1	0	0	5	6	3:15 PM	0	0	0	0	0	3:15 PM	0	0	0	3	3
Count Total	4	0	8	7	19	Count Total	0	0	0	0	0	Count Total	0	0	0	22	22
Peak Hour	4	0	8	7	19	Peak Hour	0	0	0	0	0	Peak Hour	0	0	0	22	22

(303) 216-2439
www.alltrafficdata.net

Location: 1 84th Ave & Site Access PM
Date: Tuesday, May 10, 2022
Peak Hour: 02:30 PM - 03:30 PM

Peak Hour

Motorized Vehicles

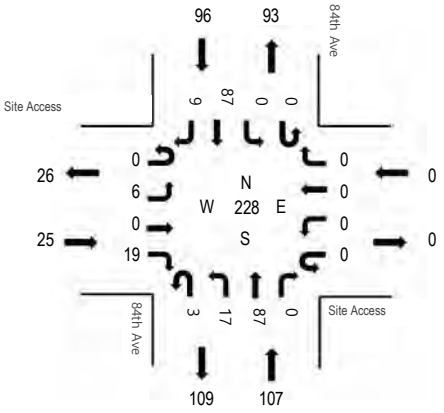

Heavy Vehicles

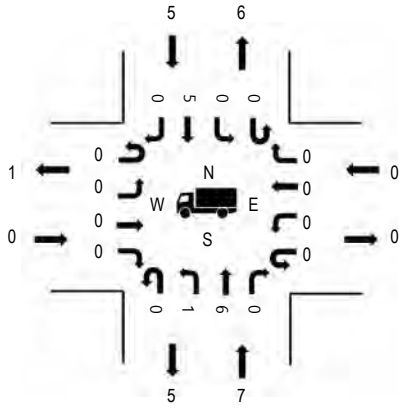

Pedestrians/Bicycles in Crosswalk

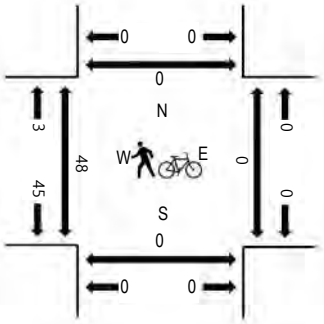

	HV%	PHF
EB	0.0%	0.33
WB	0.0%	0.00
NB	6.5%	0.79
SB	5.2%	0.63
All	5.3%	0.66

Traffic Counts - Motorized Vehicles

Interval Start Time	Site Access Eastbound				Site Access Westbound				84th Ave Northbound				84th Ave Southbound				Total	Rolling Hour
	U-Turn	Left	Thru	Right	U-Turn	Left	Thru	Right	U-Turn	Left	Thru	Right	U-Turn	Left	Thru	Right		
2:30 PM	0	0	0	1	0	0	0	0	0	3	17	0	0	0	13	0	34	228
2:45 PM	0	1	0	0	0	0	0	0	1	8	25	0	0	0	21	3	59	
3:00 PM	0	5	0	14	0	0	0	0	1	2	26	0	0	0	32	6	86	
3:15 PM	0	0	0	4	0	0	0	0	1	4	19	0	0	0	21	0	49	
Count Total	0	6	0	19	0	0	0	0	3	17	87	0	0	0	87	9	228	
Peak Hour	0	6	0	19	0	0	0	0	3	17	87	0	0	0	87	9	228	

Traffic Counts - Heavy Vehicles, Bicycles on Road, and Pedestrians/Bicycles in Crosswalk

Interval Start Time	Heavy Vehicles					Interval Start Time	Bicycles on Roadway					Interval Start Time	Pedestrians/Bicycles on Crosswalk				
	EB	NB	WB	SB	Total		EB	NB	WB	SB	Total		EB	NB	WB	SB	Total
2:30 PM	0	2	0	2	4	2:30 PM	0	0	0	0	0	2:30 PM	0	0	0	0	0
2:45 PM	0	1	0	2	3	2:45 PM	0	0	0	0	0	2:45 PM	0	0	0	0	0
3:00 PM	0	1	0	1	2	3:00 PM	0	0	0	0	0	3:00 PM	36	0	0	0	36
3:15 PM	0	3	0	0	3	3:15 PM	0	0	0	0	0	3:15 PM	12	0	0	0	12
Count Total	0	7	0	5	12	Count Total	0	0	0	0	0	Count Total	48	0	0	0	48
Peak Hour	0	7	0	5	12	Peak Hour	0	0	0	0	0	Peak Hour	48	0	0	0	48

ALL TRAFFIC DATA SERVICES
(303) 216-2439
www.alltrafficdata.net

Location: 1 84th Ave & Site Access PM
Date: Thursday, May 12, 2022
Peak Hour: 02:30 PM - 03:30 PM

Peak Hour

Motorized Vehicles

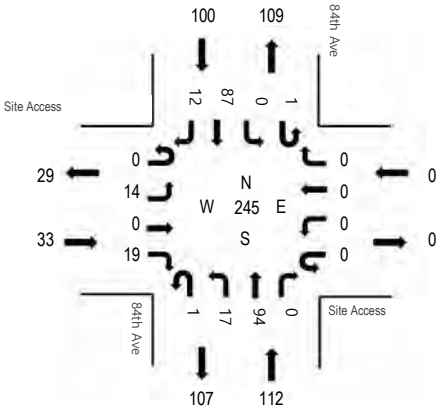

Heavy Vehicles

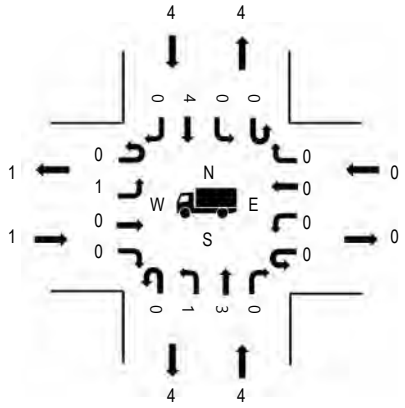

Pedestrians/Bicycles in Crosswalk

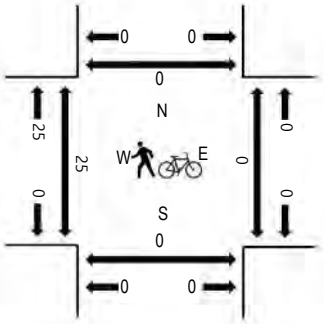

	HV%	PHF
EB	3.0%	0.46
WB	0.0%	0.00
NB	3.6%	0.70
SB	4.0%	0.78
All	3.7%	0.70

Traffic Counts - Motorized Vehicles

Interval Start Time	Site Access Eastbound				Site Access Westbound				84th Ave Northbound				84th Ave Southbound				Total	Rolling Hour
	U-Turn	Left	Thru	Right	U-Turn	Left	Thru	Right	U-Turn	Left	Thru	Right	U-Turn	Left	Thru	Right		
2:30 PM	0	0	0	1	0	0	0	0	0	1	9	0	0	0	15	0	26	245
2:45 PM	0	0	0	0	0	0	0	0	0	3	22	0	1	0	20	3	49	
3:00 PM	0	10	0	8	0	0	0	0	1	8	28	0	0	0	26	6	87	
3:15 PM	0	4	0	10	0	0	0	0	0	5	35	0	0	0	26	3	83	
Count Total	0	14	0	19	0	0	0	0	1	17	94	0	1	0	87	12	245	
Peak Hour	0	14	0	19	0	0	0	0	1	17	94	0	1	0	87	12	245	

Traffic Counts - Heavy Vehicles, Bicycles on Road, and Pedestrians/Bicycles in Crosswalk

Interval Start Time	Heavy Vehicles					Interval Start Time	Bicycles on Roadway					Interval Start Time	Pedestrians/Bicycles on Crosswalk				
	EB	NB	WB	SB	Total		EB	NB	WB	SB	Total		EB	NB	WB	SB	Total
2:30 PM	0	0	0	1	1	2:30 PM	0	0	0	0	0	2:30 PM	0	0	0	0	0
2:45 PM	0	1	0	1	2	2:45 PM	0	0	0	0	0	2:45 PM	0	0	0	0	0
3:00 PM	0	1	0	2	3	3:00 PM	0	0	0	0	0	3:00 PM	16	0	0	0	16
3:15 PM	1	2	0	0	3	3:15 PM	0	0	0	0	0	3:15 PM	9	0	0	0	9
Count Total	1	4	0	4	9	Count Total	0	0	0	0	0	Count Total	25	0	0	0	25
Peak Hour	1	4	0	4	9	Peak Hour	0	0	0	0	0	Peak Hour	25	0	0	0	25

ALL TRAFFIC DATA SERVICES
(303) 216-2439
www.alltrafficdata.net

Location: 2 Juanita Dr NE & NE 132nd St PM
Date: Tuesday, May 10, 2022
Peak Hour: 04:45 PM - 05:45 PM

Peak Hour

Motorized Vehicles

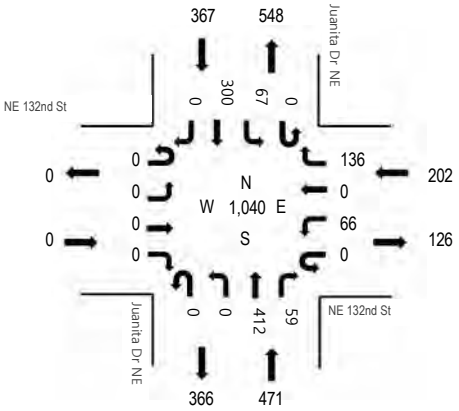

Heavy Vehicles

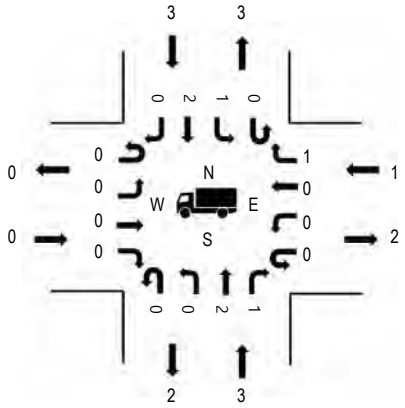

Pedestrians/Bicycles in Crosswalk

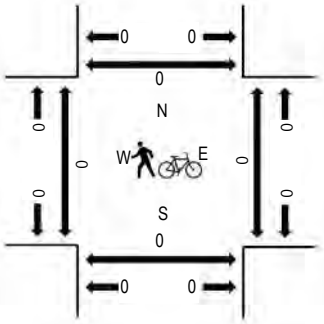

	HV%	PHF
EB	0.0%	0.00
WB	0.5%	0.81
NB	0.6%	0.90
SB	0.8%	0.87
All	0.7%	0.91

Traffic Counts - Motorized Vehicles

Interval Start Time	NE 132nd St Eastbound				NE 132nd St Westbound				Juanita Dr NE Northbound				Juanita Dr NE Southbound					Rolling Hour
	U-Turn	Left	Thru	Right	U-Turn	Left	Thru	Right	U-Turn	Left	Thru	Right	U-Turn	Left	Thru	Right	Total	
4:00 PM	0	0	0	0	0	15	0	17	0	0	96	17	0	20	80	0	245	1,005
4:15 PM	0	0	0	0	0	2	0	24	0	0	102	12	0	12	87	0	239	1,023
4:30 PM	0	0	0	0	0	8	0	21	0	0	116	12	0	16	63	0	236	1,027
4:45 PM	0	0	0	0	0	22	0	35	0	0	119	12	0	19	78	0	285	1,040
5:00 PM	0	0	0	0	0	19	0	26	0	0	96	16	0	18	88	0	263	967
5:15 PM	0	0	0	0	0	8	0	30	0	0	109	13	0	13	70	0	243	
5:30 PM	0	0	0	0	0	17	0	45	0	0	88	18	0	17	64	0	249	
5:45 PM	0	0	0	0	0	8	0	20	0	0	108	10	0	13	53	0	212	
Count Total	0	0	0	0	0	99	0	218	0	0	834	110	0	128	583	0	1,972	
Peak Hour	0	0	0	0	0	66	0	136	0	0	412	59	0	67	300	0	1,040	

Traffic Counts - Heavy Vehicles, Bicycles on Road, and Pedestrians/Bicycles in Crosswalk

Interval Start Time	Heavy Vehicles					Interval Start Time	Bicycles on Roadway					Interval Start Time	Pedestrians/Bicycles on Crosswalk				
	EB	NB	WB	SB	Total		EB	NB	WB	SB	Total		EB	NB	WB	SB	Total
4:00 PM	0	1	2	0	3	4:00 PM	0	4	0	0	4	4:00 PM	0	0	0	0	0
4:15 PM	0	1	0	4	5	4:15 PM	0	0	0	0	0	4:15 PM	0	0	0	0	0
4:30 PM	0	0	1	1	2	4:30 PM	0	0	0	0	0	4:30 PM	0	0	0	0	0
4:45 PM	0	2	0	1	3	4:45 PM	0	4	0	0	4	4:45 PM	0	0	0	0	0
5:00 PM	0	0	0	1	1	5:00 PM	0	3	0	0	3	5:00 PM	0	0	0	0	0
5:15 PM	0	1	1	1	3	5:15 PM	0	2	0	1	3	5:15 PM	0	0	0	0	0
5:30 PM	0	0	0	0	0	5:30 PM	0	1	0	0	1	5:30 PM	0	0	0	0	0
5:45 PM	0	0	0	2	2	5:45 PM	0	2	0	0	2	5:45 PM	0	0	0	0	0
Count Total	0	5	4	10	19	Count Total	0	16	0	1	17	Count Total	0	0	0	0	0
Peak Hour	0	3	1	3	7	Peak Hour	0	10	0	1	11	Peak Hour	0	0	0	0	0

ALL TRAFFIC DATA SERVICES
(303) 216-2439
www.alltrafficdata.net

Location: 5 84th Ave NE & NE 132nd St PM
Date: Tuesday, May 10, 2022
Peak Hour: 04:45 PM - 05:45 PM

Peak Hour

Motorized Vehicles

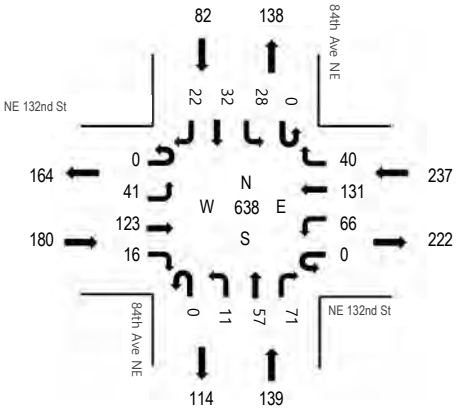

	HV%	PHF
EB	0.6%	0.88
WB	0.4%	0.83
NB	2.2%	0.91
SB	4.9%	0.98
All	1.4%	0.88

Heavy Vehicles

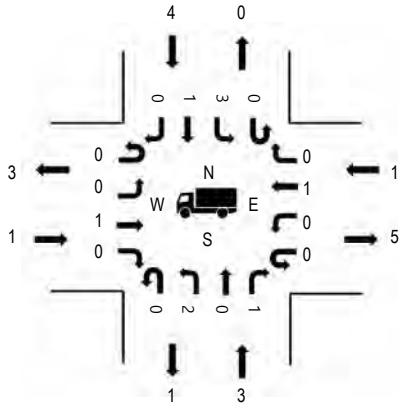

Pedestrians/Bicycles in Crosswalk

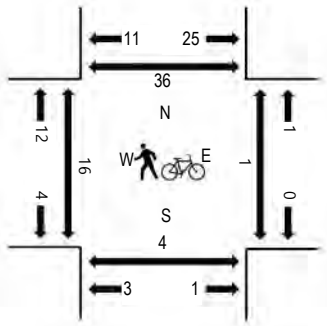

Traffic Counts - Motorized Vehicles

Interval Start Time	NE 132nd St Eastbound				NE 132nd St Westbound				84th Ave NE Northbound				84th Ave NE Southbound				Total	Rolling Hour
	U-Turn	Left	Thru	Right	U-Turn	Left	Thru	Right	U-Turn	Left	Thru	Right	U-Turn	Left	Thru	Right		
4:00 PM	0	4	21	2	0	14	24	6	0	4	7	28	0	7	17	7	141	591
4:15 PM	0	3	22	2	0	11	27	5	0	7	12	14	0	7	17	4	131	604
4:30 PM	0	4	22	2	0	16	39	7	0	2	10	15	0	4	12	5	138	631
4:45 PM	0	13	35	3	0	15	46	10	0	3	18	17	0	10	3	8	181	638
5:00 PM	0	10	32	5	0	17	25	8	0	1	18	17	0	7	8	6	154	575
5:15 PM	0	8	28	2	0	21	35	11	0	4	12	18	0	4	11	4	158	
5:30 PM	0	10	28	6	0	13	25	11	0	3	9	19	0	7	10	4	145	
5:45 PM	0	4	20	0	1	13	20	11	0	0	16	8	0	7	13	5	118	
Count Total	0	56	208	22	1	120	241	69	0	24	102	136	0	53	91	43	1,166	
Peak Hour	0	41	123	16	0	66	131	40	0	11	57	71	0	28	32	22	638	

Traffic Counts - Heavy Vehicles, Bicycles on Road, and Pedestrians/Bicycles in Crosswalk

Interval Start Time	Heavy Vehicles					Interval Start Time	Bicycles on Roadway					Interval Start Time	Pedestrians/Bicycles on Crosswalk				
	EB	NB	WB	SB	Total		EB	NB	WB	SB	Total		EB	NB	WB	SB	Total
4:00 PM	1	3	0	3	7	4:00 PM	0	0	0	0	0	4:00 PM	3	1	0	3	7
4:15 PM	2	0	0	0	2	4:15 PM	0	0	0	0	0	4:15 PM	3	0	0	0	3
4:30 PM	0	1	1	0	2	4:30 PM	0	0	0	0	0	4:30 PM	10	0	1	3	14
4:45 PM	1	0	0	1	2	4:45 PM	0	0	1	0	1	4:45 PM	3	2	1	13	19
5:00 PM	0	0	0	2	2	5:00 PM	0	0	0	0	0	5:00 PM	8	1	0	12	21
5:15 PM	0	1	1	1	3	5:15 PM	0	0	0	0	0	5:15 PM	3	1	0	5	9
5:30 PM	0	2	0	0	2	5:30 PM	0	0	0	0	0	5:30 PM	2	0	0	6	8
5:45 PM	0	0	1	1	2	5:45 PM	0	0	0	0	0	5:45 PM	1	0	3	5	9
Count Total	4	7	3	8	22	Count Total	0	0	1	0	1	Count Total	33	5	5	47	90
Peak Hour	1	3	1	4	9	Peak Hour	0	0	1	0	1	Peak Hour	16	4	1	36	57

ALL TRAFFIC DATA SERVICES
(303) 216-2439
www.alltrafficdata.net

Location: 3 82nd Ave NE & NE 132nd St PM
Date: Tuesday, May 10, 2022
Peak Hour: 04:30 PM - 05:30 PM

Peak Hour

Motorized Vehicles

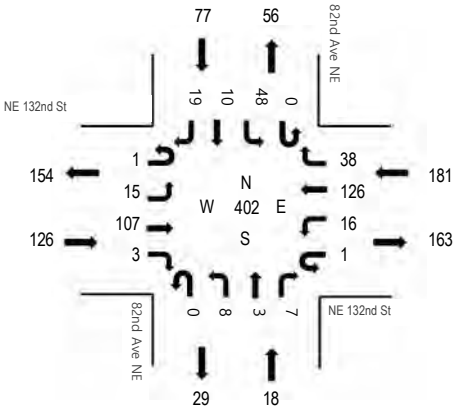

	HV%	PHF
EB	0.8%	0.90
WB	1.1%	0.77
NB	0.0%	0.75
SB	0.0%	0.49
All	0.7%	0.73

Heavy Vehicles

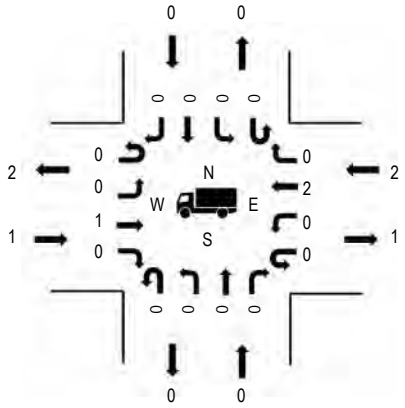

Pedestrians/Bicycles in Crosswalk

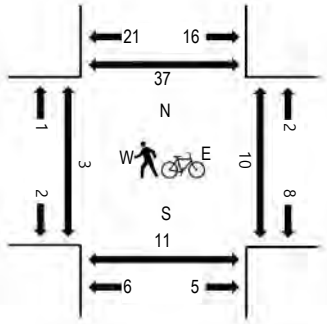

peak hour of school trip gen = 4:15 to 5:15

Traffic Counts - Motorized Vehicles

Interval Start Time	NE 132nd St Eastbound				NE 132nd St Westbound				82nd Ave NE Northbound				82nd Ave NE Southbound				Total	Rolling Hour
	U-Turn	Left	Thru	Right	U-Turn	Left	Thru	Right	U-Turn	Left	Thru	Right	U-Turn	Left	Thru	Right		
4:00 PM	0	7	24	2	0	5	30	5	0	1	1	3	0	4	2	7	91	400
4:15 PM	0	8	18	1	0	2	21	14	0	2	0	3	0	7	5	4	85	400
4:30 PM	1	3	26	0	1	3	27	11	0	2	2	1	0	5	2	2	86	402
4:45 PM	0	5	28	2	0	6	35	18	0	2	1	2	0	16	6	17	138	399
5:00 PM	0	6	29	0	0	4	25	6	0	4	0	2	0	13	2	0	91	309
5:15 PM	0	1	24	1	0	3	39	3	0	0	0	2	0	14	0	0	87	
5:30 PM	0	3	30	2	1	3	26	3	0	2	0	4	0	9	0	0	83	
5:45 PM	0	0	21	0	0	0	20	1	0	2	0	3	0	1	0	0	48	
Count Total	1	33	200	8	2	26	223	61	0	15	4	20	0	69	17	30	709	
Peak Hour	1	15	107	3	1	16	126	38	0	8	3	7	0	48	10	19	402	

Traffic Counts - Heavy Vehicles, Bicycles on Road, and Pedestrians/Bicycles in Crosswalk

Interval Start Time	Heavy Vehicles					Interval Start Time	Bicycles on Roadway					Interval Start Time	Pedestrians/Bicycles on Crosswalk				
	EB	NB	WB	SB	Total		EB	NB	WB	SB	Total		EB	NB	WB	SB	Total
4:00 PM	0	0	2	0	2	4:00 PM	0	0	0	0	0	4:00 PM	0	1	4	12	17
4:15 PM	2	0	0	0	2	4:15 PM	0	0	0	0	0	4:15 PM	2	4	0	8	14
4:30 PM	0	0	1	0	1	4:30 PM	0	0	0	0	0	4:30 PM	0	0	0	3	3
4:45 PM	1	0	0	0	1	4:45 PM	0	0	0	0	0	4:45 PM	0	3	1	13	17
5:00 PM	0	0	0	0	0	5:00 PM	0	0	0	0	0	5:00 PM	1	6	9	15	31
5:15 PM	0	0	1	0	1	5:15 PM	0	0	0	0	0	5:15 PM	2	2	0	6	10
5:30 PM	0	0	0	0	0	5:30 PM	0	0	0	0	0	5:30 PM	4	2	0	5	11
5:45 PM	0	0	0	0	0	5:45 PM	0	0	0	0	0	5:45 PM	0	0	0	1	1
Count Total	3	0	4	0	7	Count Total	0	0	0	0	0	Count Total	9	18	14	63	104
Peak Hour	1	0	2	0	3	Peak Hour	0	0	0	0	0	Peak Hour	3	11	10	37	61

ALL TRAFFIC DATA SERVICES
(303) 216-2439
www.alltrafficdata.net

Location: 3 82nd Ave NE & NE 132nd St PM
Date: Thursday, May 12, 2022
Peak Hour: 04:00 PM - 05:00 PM

Peak Hour

Motorized Vehicles

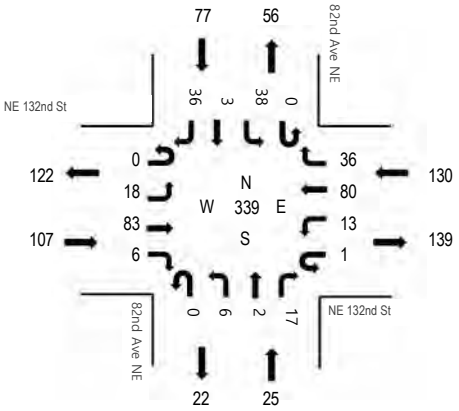

Heavy Vehicles

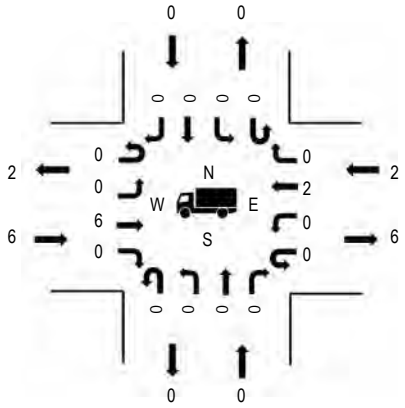

Pedestrians/Bicycles in Crosswalk

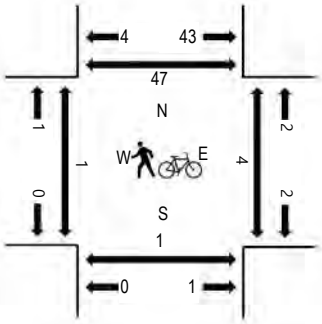

	HV%	PHF
EB	5.6%	0.61
WB	1.5%	0.79
NB	0.0%	0.63
SB	0.0%	0.57
All	2.4%	0.68

peak hour of school trip gen = 4:00 to 5:00

Traffic Counts - Motorized Vehicles

Interval Start Time	NE 132nd St Eastbound				NE 132nd St Westbound				82nd Ave NE Northbound				82nd Ave NE Southbound				Total	Rolling Hour
	U-Turn	Left	Thru	Right	U-Turn	Left	Thru	Right	U-Turn	Left	Thru	Right	U-Turn	Left	Thru	Right		
4:00 PM	0	1	14	1	0	4	29	2	0	1	1	8	0	4	1	4	70	339
4:15 PM	0	2	21	1	0	4	10	4	0	1	0	3	0	2	0	2	50	322
4:30 PM	0	11	31	2	0	4	12	25	0	4	1	4	0	14	1	15	124	322
4:45 PM	0	4	17	2	1	1	29	5	0	0	0	2	0	18	1	15	95	244
5:00 PM	0	2	13	1	0	1	26	1	0	0	0	1	0	3	0	5	53	207
5:15 PM	0	1	15	2	0	4	18	1	0	0	0	6	0	2	0	1	50	
5:30 PM	0	0	22	0	0	3	16	0	0	0	0	4	0	1	0	0	46	
5:45 PM	0	7	16	0	0	3	19	0	0	3	1	7	0	2	0	0	58	
Count Total	0	28	149	9	1	24	159	38	0	9	3	35	0	46	3	42	546	
Peak Hour	0	18	83	6	1	13	80	36	0	6	2	17	0	38	3	36	339	

Traffic Counts - Heavy Vehicles, Bicycles on Road, and Pedestrians/Bicycles in Crosswalk

Interval Start Time	Heavy Vehicles					Interval Start Time	Bicycles on Roadway					Interval Start Time	Pedestrians/Bicycles on Crosswalk				
	EB	NB	WB	SB	Total		EB	NB	WB	SB	Total		EB	NB	WB	SB	Total
4:00 PM	0	0	2	0	2	4:00 PM	0	0	0	0	0	4:00 PM	0	0	1	39	40
4:15 PM	3	0	0	0	3	4:15 PM	0	0	0	0	0	4:15 PM	0	1	0	3	4
4:30 PM	1	0	0	0	1	4:30 PM	0	0	0	0	0	4:30 PM	1	0	3	3	7
4:45 PM	2	0	0	0	2	4:45 PM	0	0	0	0	0	4:45 PM	0	0	0	2	2
5:00 PM	0	0	0	0	0	5:00 PM	0	0	0	0	0	5:00 PM	0	0	0	5	5
5:15 PM	0	0	0	0	0	5:15 PM	0	0	0	0	0	5:15 PM	1	0	4	2	7
5:30 PM	0	0	0	0	0	5:30 PM	0	0	0	0	0	5:30 PM	0	1	0	2	3
5:45 PM	0	0	0	0	0	5:45 PM	0	0	0	0	0	5:45 PM	0	0	4	3	7
Count Total	6	0	2	0	8	Count Total	0	0	0	0	0	Count Total	2	2	12	59	75
Peak Hour	6	0	2	0	8	Peak Hour	0	0	0	0	0	Peak Hour	1	1	4	47	53

ALL TRAFFIC DATA SERVICES
(303) 216-2439
www.alltrafficdata.net

Location: 4 East Site Access & NE 132nd St PM
Date: Tuesday, May 10, 2022
Peak Hour: 04:45 PM - 05:45 PM

Peak Hour

Motorized Vehicles

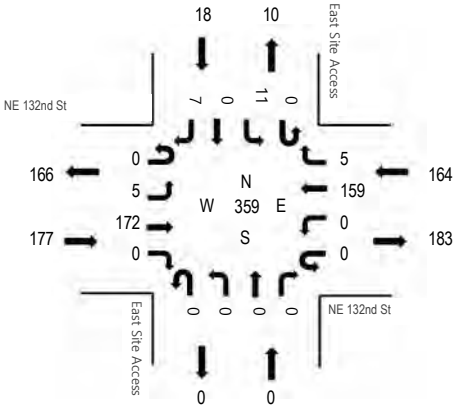

Heavy Vehicles

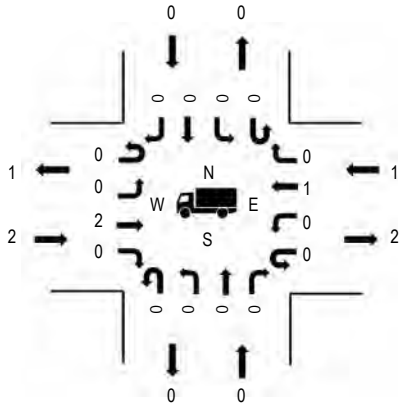

Pedestrians/Bicycles in Crosswalk

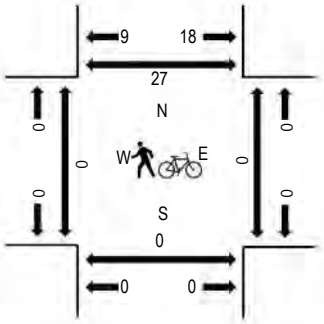

	HV%	PHF
EB	1.1%	0.92
WB	0.6%	0.72
NB	0.0%	0.00
SB	0.0%	0.30
All	0.8%	0.75

peak hour of school trip gen = 4:15 to 5:15

Traffic Counts - Motorized Vehicles

Interval Start Time	NE 132nd St Eastbound				NE 132nd St Westbound				East Site Access Northbound				East Site Access Southbound					Rolling Hour
	U-Turn	Left	Thru	Right	U-Turn	Left	Thru	Right	U-Turn	Left	Thru	Right	U-Turn	Left	Thru	Right	Total	
4:00 PM	0	1	30	0	0	0	36	1	0	0	0	0	0	1	0	1	70	332
4:15 PM	0	3	22	1	0	0	35	2	0	0	0	0	0	1	0	1	65	341
4:30 PM	0	2	26	1	0	0	42	4	0	0	0	0	0	2	0	0	77	358
4:45 PM	0	4	44	0	0	0	52	5	0	0	0	0	0	9	0	6	120	359
5:00 PM	0	0	46	0	0	0	32	0	0	0	0	0	0	1	0	0	79	290
5:15 PM	0	1	37	0	0	0	42	0	0	0	0	0	0	1	0	1	82	
5:30 PM	0	0	45	0	0	0	33	0	0	0	0	0	0	0	0	0	78	
5:45 PM	0	0	25	0	0	0	24	1	0	0	0	0	0	1	0	0	51	
Count Total	0	11	275	2	0	0	296	13	0	0	0	0	0	16	0	9	622	
Peak Hour	0	5	172	0	0	0	159	5	0	0	0	0	0	11	0	7	359	

Traffic Counts - Heavy Vehicles, Bicycles on Road, and Pedestrians/Bicycles in Crosswalk

Interval Start Time	Heavy Vehicles					Interval Start Time	Bicycles on Roadway					Interval Start Time	Pedestrians/Bicycles on Crosswalk				
	EB	NB	WB	SB	Total		EB	NB	WB	SB	Total		EB	NB	WB	SB	Total
4:00 PM	0	0	1	1	2	4:00 PM	0	0	0	1	1	4:00 PM	0	0	0	10	10
4:15 PM	2	0	0	1	3	4:15 PM	0	0	0	0	0	4:15 PM	0	0	0	10	10
4:30 PM	0	0	1	0	1	4:30 PM	0	0	0	0	0	4:30 PM	0	0	0	5	5
4:45 PM	1	0	0	0	1	4:45 PM	0	0	0	1	1	4:45 PM	0	0	0	4	4
5:00 PM	1	0	0	0	1	5:00 PM	0	0	0	0	0	5:00 PM	0	0	0	10	10
5:15 PM	0	0	1	0	1	5:15 PM	0	0	0	0	0	5:15 PM	0	0	0	7	7
5:30 PM	0	0	0	0	0	5:30 PM	0	0	0	0	0	5:30 PM	0	0	0	6	6
5:45 PM	0	0	1	1	2	5:45 PM	0	0	0	1	1	5:45 PM	0	0	0	2	2
Count Total	4	0	4	3	11	Count Total	0	0	0	3	3	Count Total	0	0	0	54	54
Peak Hour	2	0	1	0	3	Peak Hour	0	0	0	1	1	Peak Hour	0	0	0	27	27

ALL TRAFFIC DATA SERVICES
(303) 216-2439
www.alltrafficdata.net

Location: 4 East Site Access & NE 132nd St PM
Date: Thursday, May 12, 2022
Peak Hour: 04:00 PM - 05:00 PM

Peak Hour

Motorized Vehicles

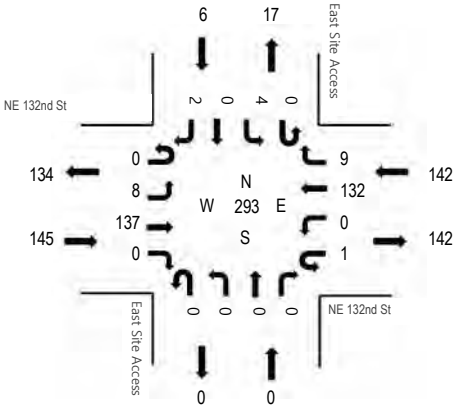

Heavy Vehicles

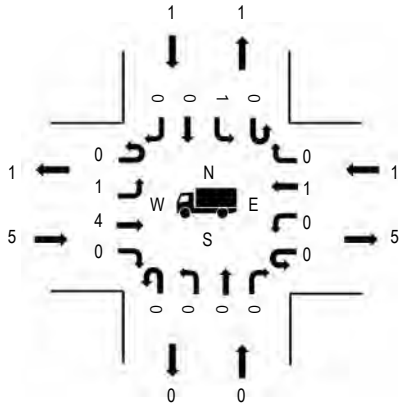

Pedestrians/Bicycles in Crosswalk

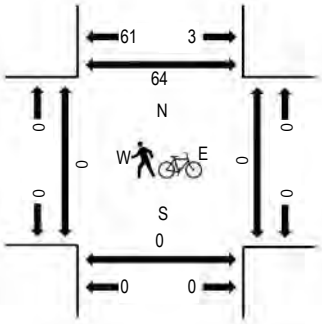

	HV%	PHF
EB	3.4%	0.70
WB	0.7%	0.79
NB	0.0%	0.00
SB	16.7%	0.38
All	2.4%	0.73

peak hour of school trip gen = 4:00 to 5:00

Traffic Counts - Motorized Vehicles

Interval Start Time	NE 132nd St Eastbound				NE 132nd St Westbound				East Site Access Northbound				East Site Access Southbound				Total	Rolling Hour
	U-Turn	Left	Thru	Right	U-Turn	Left	Thru	Right	U-Turn	Left	Thru	Right	U-Turn	Left	Thru	Right		
4:00 PM	0	0	25	0	0	0	34	1	0	0	0	0	0	0	0	0	60	293
4:15 PM	0	1	25	0	0	0	19	1	0	0	0	0	0	1	0	0	47	282
4:30 PM	0	2	50	0	0	0	42	3	0	0	0	0	0	3	0	1	101	289
4:45 PM	0	5	37	0	1	0	37	4	0	0	0	0	0	0	0	1	85	234
5:00 PM	0	1	17	0	0	0	30	0	0	0	0	0	0	1	0	0	49	196
5:15 PM	0	0	28	0	0	0	26	0	0	0	0	0	0	0	0	0	54	
5:30 PM	0	0	25	0	1	0	20	0	0	0	0	0	0	0	0	0	46	
5:45 PM	0	0	25	0	0	0	22	0	0	0	0	0	0	0	0	0	47	
Count Total	0	9	232	0	2	0	230	9	0	0	0	0	0	5	0	2	489	
Peak Hour	0	8	137	0	1	0	132	9	0	0	0	0	0	4	0	2	293	

Traffic Counts - Heavy Vehicles, Bicycles on Road, and Pedestrians/Bicycles in Crosswalk

Interval Start Time	Heavy Vehicles					Interval Start Time	Bicycles on Roadway					Interval Start Time	Pedestrians/Bicycles on Crosswalk				
	EB	NB	WB	SB	Total		EB	NB	WB	SB	Total		EB	NB	WB	SB	Total
4:00 PM	0	0	1	0	1	4:00 PM	0	0	0	0	0	4:00 PM	0	0	0	48	48
4:15 PM	3	0	0	1	4	4:15 PM	0	0	0	0	0	4:15 PM	0	0	0	11	11
4:30 PM	1	0	0	0	1	4:30 PM	0	0	0	0	0	4:30 PM	0	0	0	4	4
4:45 PM	1	0	0	0	1	4:45 PM	0	0	0	0	0	4:45 PM	0	0	0	1	1
5:00 PM	0	0	0	0	0	5:00 PM	0	0	0	0	0	5:00 PM	0	0	0	0	0
5:15 PM	0	0	0	0	0	5:15 PM	0	0	0	0	0	5:15 PM	0	0	0	3	3
5:30 PM	0	0	0	0	0	5:30 PM	0	0	0	0	0	5:30 PM	0	0	0	1	1
5:45 PM	0	0	0	0	0	5:45 PM	0	0	0	0	0	5:45 PM	0	0	0	1	1
Count Total	5	0	1	1	7	Count Total	0	0	0	0	0	Count Total	0	0	0	69	69
Peak Hour	5	0	1	1	7	Peak Hour	0	0	0	0	0	Peak Hour	0	0	0	64	64

ALL TRAFFIC DATA SERVICES
(303) 216-2439
www.alltrafficdata.net

Location: 1 84th Ave & Site Access PM
Date: Tuesday, May 10, 2022
Peak Hour: 04:45 PM - 05:45 PM

Peak Hour

Motorized Vehicles

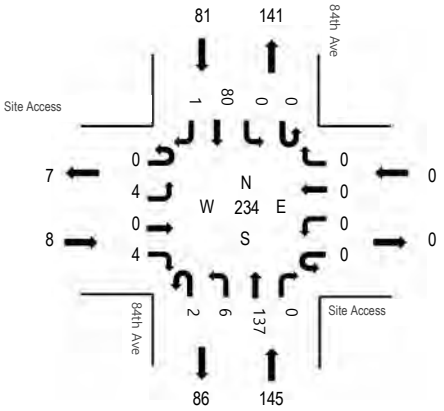

Heavy Vehicles

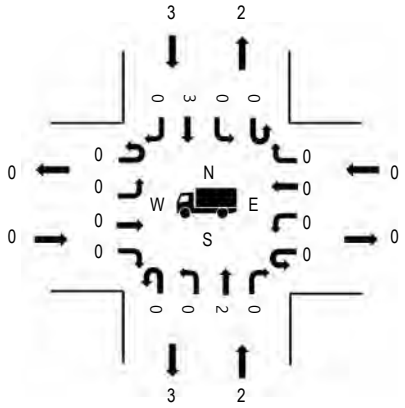

Pedestrians/Bicycles in Crosswalk

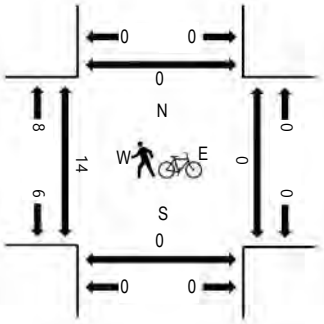

	HV%	PHF
EB	0.0%	0.50
WB	0.0%	0.00
NB	1.4%	0.79
SB	3.7%	0.92
All	2.1%	0.90

peak hour of school trip gen = 4:15 to 5:15

Traffic Counts - Motorized Vehicles

Interval Start Time	Site Access Eastbound				Site Access Westbound				84th Ave Northbound				84th Ave Southbound				Total	Rolling Hour
	U-Turn	Left	Thru	Right	U-Turn	Left	Thru	Right	U-Turn	Left	Thru	Right	U-Turn	Left	Thru	Right		
4:00 PM	0	0	0	2	0	0	0	0	1	2	15	0	0	0	28	0	48	201
4:15 PM	0	0	0	2	0	0	0	0	0	0	21	0	0	0	24	0	47	213
4:30 PM	0	0	0	0	0	0	0	0	0	1	19	0	0	0	21	0	41	219
4:45 PM	0	0	0	2	0	0	0	0	2	2	42	0	0	0	17	0	65	234
5:00 PM	0	1	0	0	0	0	0	0	0	1	37	0	0	0	21	0	60	222
5:15 PM	0	1	0	0	0	0	0	0	0	1	30	0	0	0	21	0	53	
5:30 PM	0	2	0	2	0	0	0	0	0	2	28	0	0	0	21	1	56	
5:45 PM	0	0	0	1	0	0	0	0	0	0	28	0	0	0	24	0	53	
Count Total	0	4	0	9	0	0	0	0	3	9	220	0	0	0	177	1	423	
Peak Hour	0	4	0	4	0	0	0	0	2	6	137	0	0	0	80	1	234	

Traffic Counts - Heavy Vehicles, Bicycles on Road, and Pedestrians/Bicycles in Crosswalk

Interval Start Time	Heavy Vehicles					Interval Start Time	Bicycles on Roadway					Interval Start Time	Pedestrians/Bicycles on Crosswalk				
	EB	NB	WB	SB	Total		EB	NB	WB	SB	Total		EB	NB	WB	SB	Total
4:00 PM	0	2	0	2	4	4:00 PM	0	1	0	0	1	4:00 PM	1	0	0	0	1
4:15 PM	0	1	0	0	1	4:15 PM	0	0	0	1	1	4:15 PM	3	0	0	0	3
4:30 PM	0	1	0	1	2	4:30 PM	0	0	0	0	0	4:30 PM	3	0	0	0	3
4:45 PM	0	0	0	0	0	4:45 PM	0	2	0	0	2	4:45 PM	4	0	0	0	4
5:00 PM	0	1	0	2	3	5:00 PM	0	1	0	0	1	5:00 PM	4	0	0	0	4
5:15 PM	0	1	0	1	2	5:15 PM	0	0	0	0	0	5:15 PM	2	0	0	0	2
5:30 PM	0	0	0	0	0	5:30 PM	0	0	0	1	1	5:30 PM	4	0	0	0	4
5:45 PM	0	1	0	1	2	5:45 PM	0	0	0	2	2	5:45 PM	1	0	0	0	1
Count Total	0	7	0	7	14	Count Total	0	4	0	4	8	Count Total	22	0	0	0	22
Peak Hour	0	2	0	3	5	Peak Hour	0	3	0	1	4	Peak Hour	14	0	0	0	14

ALL TRAFFIC DATA SERVICES
(303) 216-2439
www.alltrafficdata.net

Location: 1 84th Ave & Site Access PM
Date: Thursday, May 12, 2022
Peak Hour: 04:00 PM - 05:00 PM

Peak Hour

Motorized Vehicles

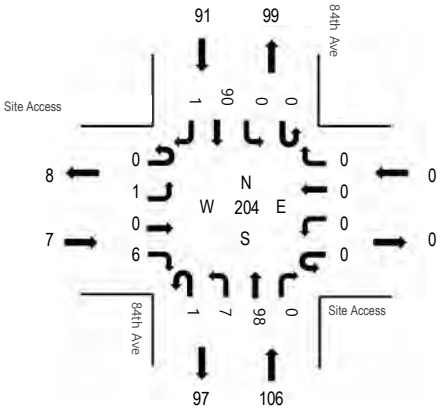

	HV%	PHF
EB	0.0%	0.25
WB	0.0%	0.00
NB	3.8%	0.88
SB	4.4%	0.63
All	3.9%	0.89

Heavy Vehicles

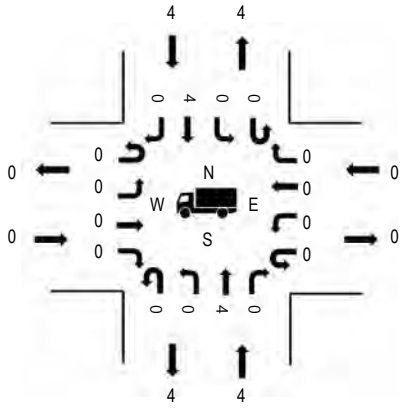

Pedestrians/Bicycles in Crosswalk

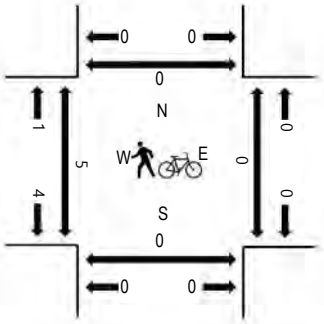

peak hour of school trip gen = 4:00 to 5:00

Traffic Counts - Motorized Vehicles

Interval Start Time	Site Access Eastbound				Site Access Westbound				84th Ave Northbound				84th Ave Southbound				Total	Rolling Hour
	U-Turn	Left	Thru	Right	U-Turn	Left	Thru	Right	U-Turn	Left	Thru	Right	U-Turn	Left	Thru	Right		
4:00 PM	0	0	0	0	0	0	0	0	0	0	21	0	0	0	36	0	57	204
4:15 PM	0	0	0	0	0	0	0	0	0	1	24	0	0	0	12	0	37	179
4:30 PM	0	0	0	0	0	0	0	0	1	1	28	0	0	0	26	0	56	184
4:45 PM	0	1	0	6	0	0	0	0	0	5	25	0	0	0	16	1	54	178
5:00 PM	0	0	0	1	0	0	0	0	0	0	20	0	0	0	11	0	32	154
5:15 PM	0	0	0	0	0	0	0	0	0	0	25	0	0	0	16	1	42	
5:30 PM	0	0	0	0	0	0	0	0	0	0	27	0	0	0	23	0	50	
5:45 PM	0	0	0	0	0	0	0	0	0	0	18	0	0	0	12	0	30	
Count Total	0	1	0	7	0	0	0	0	1	7	188	0	0	0	152	2	358	
Peak Hour	0	1	0	6	0	0	0	0	1	7	98	0	0	0	90	1	204	

Traffic Counts - Heavy Vehicles, Bicycles on Road, and Pedestrians/Bicycles in Crosswalk

Interval Start Time	Heavy Vehicles					Interval Start Time	Bicycles on Roadway					Interval Start Time	Pedestrians/Bicycles on Crosswalk				
	EB	NB	WB	SB	Total		EB	NB	WB	SB	Total		EB	NB	WB	SB	Total
4:00 PM	0	1	0	2	3	4:00 PM	0	0	0	0	0	4:00 PM	0	0	0	0	0
4:15 PM	0	1	0	0	1	4:15 PM	0	0	0	0	0	4:15 PM	2	0	0	0	2
4:30 PM	0	1	0	2	3	4:30 PM	0	0	0	0	0	4:30 PM	2	0	0	0	2
4:45 PM	0	1	0	0	1	4:45 PM	0	0	0	1	1	4:45 PM	1	0	0	0	1
5:00 PM	0	0	0	0	0	5:00 PM	0	0	0	0	0	5:00 PM	0	0	0	0	0
5:15 PM	0	1	0	0	1	5:15 PM	0	0	0	0	0	5:15 PM	0	0	0	0	0
5:30 PM	0	0	0	0	0	5:30 PM	0	0	0	0	0	5:30 PM	4	0	0	0	4
5:45 PM	0	0	0	0	0	5:45 PM	0	0	0	0	0	5:45 PM	2	0	0	0	2
Count Total	0	5	0	4	9	Count Total	0	0	0	1	1	Count Total	11	0	0	0	11
Peak Hour	0	4	0	4	8	Peak Hour	0	0	0	1	1	Peak Hour	5	0	0	0	5

Intersection = 132nd & Main Dwy
Peak Period = AM Peak
Count Date = Thur 5/12/22

15-Minute Volumes

	NE 132nd St				NE 132nd St				82nd Ave NE				Driveway				
Time Starting	EBU	EBL	EBT	EBR	WBU	WBL	WBT	WBR	NBU	NBL	NBT	NBR	SBU	SBL	SBT	SBR	**TOTAL**
7:45		15	13	1		1	12	23		1	0	4		4	0	15	**89**
8:00		6	25	1		3	10	23		1	0	8		10	1	20	**108**
8:15		45	21	3		26	26	51		0	2	25		0	2	67	**268**
8:30		5	24	5		23	24	14		1	1	16		15	2	43	**173**
8:45		2	9	1	1	1	12	6		1	1	4		3	1	6	**48**
	0	73	92	11	1	54	84	117	0	4	4	57	0	32	6	151	

Peak Hour Volumes

	NE 132nd St				NE 132nd St				82nd Ave NE				Driveway				
Peak Hour	EBU	EBL	EBT	EBR	WBU	WBL	WBT	WBR	NBU	NBL	NBT	NBR	SBU	SBL	SBT	SBR	**TOTAL**
7:45 - 8:45	0	71	83	10	0	53	72	111	0	3	3	53	0	29	5	145	**638**
8:00 - 9:00	0	58	79	10	1	53	72	94	0	3	4	53	0	28	6	136	**597**

Peak Hour Factors

	NE 132nd St	NE 132nd St	82nd Ave NE	Driveway	
Peak Hour	Eastbound	Westbound	Northbound	Southbound	**TOTAL**
7:45 - 8:45	0.59	0.57	0.55	0.65	**0.60**
8:00 - 9:00	0.53	0.53	0.56	0.62	**0.56**

Heavy Vehicles

	NE 132nd St				NE 132nd St				82nd Ave NE				Driveway				
Time Starting	EBU	EBL	EBT	EBR	WBU	WBL	WBT	WBR	NBU	NBL	NBT	NBR	SBU	SBL	SBT	SBR	**TOTAL**
7:45		0	0	0		0	0	0		0	0	0		0	0	0	**0**
8:00		0	1	0		0	0	0		0	0	0		0	0	0	**1**
8:15		0	1	0		0	0	0		0	0	0		0	0	0	**1**
8:30		0	1	0		1	0	1		0	0	0		0	0	0	**3**
8:45		0	0	0		0	4	0		0	0	0		0	0	0	**4**
	0	0	3	0	0	1	4	1	0	0	0	0	0	0	0	0	

Heavy Vehicle Calculations

	NE 132nd St	NE 132nd St	82nd Ave NE	Driveway	
Peak Hour	Eastbound	Westbound	Northbound	Southbound	**TOTAL**
7:45 - 8:45	1.8%	0.8%	0.0%	0.0%	**0.8%**
8:00 - 9:00	2.0%	2.7%	0.0%	0.0%	**1.5%**

Notes:

1) Volumes from 7:45-8:00 AM were estimated based following:

a) For entering/exiting school driveway trips, the estimated volumes were based on detailed trip generation study calculations and the directional distribution of driveway trips during the 8AM-9AM period.

b) For non-school driveway trips, the estimated volumes were based on the 8:45-9:00AM period for the turning volumes and the 8:45-9:00AM volume or 50% of the 8:00-8:15AM volume (whichever was greater) for the thru movements.

Intersection = 132nd & Bus Dwy
Peak Period = AM Peak
Count Date = Thur 5/12/22

15-Minute Volumes

	NE 132nd St				NE 132nd St				Bus Driveway				
Time Starting	EBU	EBL	EBT	EBR	WBU	WBL	WBT	WBR	SBU	SBL	SBT	SBR	**TOTAL**
7:45		0	22				23	0		0		0	**45**
8:00		1	44				45	1		0		0	**91**
8:15		1	45				116	4		3		0	**169**
8:30		0	56		2		49	1		3		0	**111**
8:45		0	20				17	1		0		2	**40**
	0	2	187	0	2	0	250	7	0	6	0	2	

Peak Hour Volumes

	NE 132nd St				NE 132nd St				Bus Driveway				
Peak Hour	EBU	EBL	EBT	EBR	WBU	WBL	WBT	WBR	SBU	SBL	SBT	SBR	**TOTAL**
7:45 - 8:45	0	2	167	0	2	0	233	6	0	6	0	0	**416**
8:00 - 9:00	0	2	165	0	2	0	227	7	0	6	0	2	**411**

Peak Hour Factors

	NE 132nd St	NE 132nd St	Bus Driveway	
Peak Hour	Eastbound	Westbound	Southbound	**TOTAL**
7:45 - 8:45	0.75	0.50	0.50	**0.62**
8:00 - 9:00	0.75	0.49	0.67	**0.61**

Heavy Vehicles

	NE 132nd St				NE 132nd St				Bus Driveway				
Time Starting	EBU	EBL	EBT	EBR	WBU	WBL	WBT	WBR	SBU	SBL	SBT	SBR	**TOTAL**
7:45		0	0				0	0		0		0	**0**
8:00		1	0				0	1		0		0	**2**
8:15		1	0				1	4		3		0	**9**
8:30		0	3				2	1		3		0	**9**
8:45		0	1				2	0		0		2	**5**
	0	2	4	0	0	0	5	6	0	6	0	2	

Heavy Vehicle Calculations

	NE 132nd St	NE 132nd St	Bus Driveway	
Peak Hour	Eastbound	Westbound	Southbound	**TOTAL**
7:45 - 8:45	3.0%	3.7%	100.0%	**4.8%**
8:00 - 9:00	3.6%	4.7%	100.0%	**6.1%**

Notes:

1) Volumes from 7:45-8:00 AM were estimated based following:

a) For entering/exiting school driveway trips, the estimated volumes were based on detailed trip generation study calculations and the directional distribution of driveway trips during the 8AM-9AM period.

b) For non-school driveway trips, the estimated volumes were based on the 8:45-9:00AM period for the turning volumes and the 8:45 volume or 50% of the 8:00-8:15AM volume (whichever was greater) for the thru movements.

Intersection = 84th Ave NE/Driveway
Peak Period = AM Peak
Count Date = Thur 5/12/22

15-Minute Volumes

	Driveway				84th Ave NE				84th Ave NE				
Time Starting	EBU	EBL	EBT	EBR	NBU	NBL	NBT	NBR	SBU	SBL	SBT	SBR	**TOTAL**
7:45		1		5		5	9				23	2	**45**
8:00		4		20		19	9				23	8	**83**
8:15		7		12		19	16				58	16	**128**
8:30		1		9		3	19				20	3	**55**
8:45		0		1		0	11				17	1	**30**
	0	13	0	47	0	46	64	0	0	0	141	30	

Peak Hour Volumes

	Driveway				84th Ave NE				84th Ave NE				
Peak Hour	EBU	EBL	EBT	EBR	NBU	NBL	NBT	NBR	SBU	SBL	SBT	SBR	**TOTAL**
7:45 - 8:45	0	13	0	46	0	46	53	0	0	0	124	29	**311**
8:00 - 9:00	0	12	0	42	0	41	55	0	0	0	118	28	**296**

Peak Hour Factors

	Driveway	84th Ave NE	84th Ave NE	
Peak Hour	Eastbound	Northbound	Southbound	**TOTAL**
7:45 - 8:45	0.61	0.71	0.52	**0.61**
8:00 - 9:00	0.56	0.69	0.49	**0.58**

Heavy Vehicles

	Driveway				84th Ave NE				84th Ave NE				
Time Starting	EBU	EBL	EBT	EBR	NBU	NBL	NBT	NBR	SBU	SBL	SBT	SBR	**TOTAL**
7:45		0		0		0	1				1		**2**
8:00		0		0		1	0				1		**2**
8:15		0		0		0	1				1		**2**
8:30		0		1		1	0				1		**3**
8:45		0		1		0	1				1		**3**
	0	0	0	2	0	2	3	0	0	0	5	0	

Heavy Vehicle Calculations

	Driveway	84th Ave NE	84th Ave NE	
Peak Hour	Eastbound	Northbound	Southbound	**TOTAL**
7:45 - 8:45	1.7%	4.0%	2.6%	**2.9%**
8:00 - 9:00	3.7%	4.2%	2.7%	**3.4%**

Notes:

1) Volumes from 7:45-8:00 AM were estimated based following:

a) For entering/exiting school driveway trips, the estimated volumes were based on the "adjusted" peak hour trip generation from being 9% higher than the 8:00-9:00AM hour (see historical data in Appendix F) and the directional distribution of driveway trips during the 8AM-9AM period.

b) For non-school driveway trips, the estimated volumes were based on the 8:45-9:00AM volume or 50% of the 8:00-8:15AM volume (whichever was greater) for the thru movements.

Intersection = 132nd & Main Dwy
Peak Period = Afternoon Peak
Count Date = Thur 5/12/22

15-Minute Volumes

	NE 132nd St				NE 132nd St				82nd Ave NE				Driveway				
Time Starting	EBU	EBL	EBT	EBR	WBU	WBL	WBT	WBR	NBU	NBL	NBT	NBR	SBU	SBL	SBT	SBR	**TOTAL**
2:30	1	2	9	1		5	10	9		1	1	2		2	0	1	**44**
2:45		5	21	6		7	34	7		2	0	3		1	0	0	**86**
3:00		11	25	7		8	30	9		2	0	16		0	1	10	**119**
3:15		6	28	1		7	23	7		2	0	9		13	7	20	**123**
3:30		6	14	1		5	12	6		1	0	5		6	3	9	**68**
	1	30	97	16	0	32	109	38	0	8	1	35	0	22	11	40	

Peak Hour Volumes

	NE 132nd St				NE 132nd St				82nd Ave NE				Driveway				
Peak Hour	EBU	EBL	EBT	EBR	WBU	WBL	WBT	WBR	NBU	NBL	NBT	NBR	SBU	SBL	SBT	SBR	**TOTAL**
2:30 - 3:30	1	24	83	15	0	27	97	32	0	7	1	30	0	16	8	31	**372**
2:45 - 3:45	0	28	88	15	0	27	99	29	0	7	0	33	0	20	11	39	**396**

Peak Hour Factors

	NE 132nd St	NE 132nd St	82nd Ave NE	Driveway	
Peak Hour	Eastbound	Westbound	Northbound	Southbound	**TOTAL**
2:30 - 3:30	0.72	0.81	0.53	0.34	**0.76**
2:45 - 3:45	0.76	0.81	0.56	0.44	**0.80**

Heavy Vehicles

	NE 132nd St				NE 132nd St				82nd Ave NE				Driveway				
Time Starting	EBU	EBL	EBT	EBR	WBU	WBL	WBT	WBR	NBU	NBL	NBT	NBR	SBU	SBL	SBT	SBR	**TOTAL**
2:30		0	0	0		0	1	0		0	0	0		0	0	0	**1**
2:45		0	1	0		0	0	0		0	0	0		0	0	0	**1**
3:00		0	2	0		0	1	0		0	0	0		0	0	0	**3**
3:15		0	1	0		0	1	0		0	0	0		0	0	0	**2**
3:30		0	0	0		0	1	0		0	0	0		0	0	0	**1**
	0	0	4	0	0	0	4	0	0	0	0	0	0	0	0	0	

Heavy Vehicle Calculations

	NE 132nd St	NE 132nd St	82nd Ave NE	Driveway	
Peak Hour	Eastbound	Westbound	Northbound	Southbound	**TOTAL**
2:30 - 3:30	3.3%	1.9%	0.0%	0.0%	**1.9%**
2:45 - 3:45	3.1%	1.9%	0.0%	0.0%	**1.8%**

Notes:

1) Volumes from 3:30-3:45 PM were estimated based following:

a) For entering/exiting school driveway trips, the estimated volumes were based on detailed trip generation study calculations and the directional distribution of driveway trips during the 2:30PM-3:30PM period.

b) For non-school driveway trips, the estimated volumes were based on the 2:30-2:45PM period for the turning volumes and the 2:30-2:45PM volume or 50% of the 3:15-3:30PM volume (whichever was greater) for the thru movements.

Intersection = 132nd & Bus Dwy
Peak Period = Afternoon Peak
Count Date = Thur 5/12/22

15-Minute Volumes

	NE 132nd St				NE 132nd St				Bus Driveway				
Time Starting	EBU	EBL	EBT	EBR	WBU	WBL	WBT	WBR	SBU	SBL	SBT	SBR	**TOTAL**
2:30		0	14				26	0		0		0	**40**
2:45		0	26				64	1		0		0	**91**
3:00		1	36		1		32	5		2		0	**77**
3:15		0	52				31	0		4		1	**88**
3:30		0	26				26	0		0		0	**52**
	0	1	154	0	1	0	179	6	0	6	0	1	

Peak Hour Volumes

	NE 132nd St				NE 132nd St				Bus Driveway				
Peak Hour	EBU	EBL	EBT	EBR	WBU	WBL	WBT	WBR	SBU	SBL	SBT	SBR	**TOTAL**
2:30 - 3:30	0	1	128	0	1	0	153	6	0	6	0	1	**296**
2:45 - 3:45	0	1	140	0	1	0	153	6	0	6	0	1	**308**
	0	1	114	0	1	0	89	5	0	6	0	1	**217**

Peak Hour Factors

	NE 132nd St	NE 132nd St	Bus Driveway	
Peak Hour	Eastbound	Westbound	Southbound	**TOTAL**
2:30 - 3:30	0.62	0.62	0.35	**0.81**
2:45 - 3:45	0.68	0.62	0.35	**0.85**

Heavy Vehicles

	NE 132nd St				NE 132nd St				Bus Driveway				
Time Starting	EBU	EBL	EBT	EBR	WBU	WBL	WBT	WBR	SBU	SBL	SBT	SBR	**TOTAL**
2:30		0	0				1	0		0		0	**1**
2:45		0	1				0	1		0		0	**2**
3:00		1	1				1	5		2		0	**10**
3:15		0	1				0	0		4		1	**6**
3:30		0	0				0	0		0		0	**0**
	0	1	3	0	0	0	2	6	0	6	0	1	

Heavy Vehicle Calculations

	NE 132nd St	NE 132nd St	Bus Driveway	
Peak Hour	Eastbound	Westbound	Southbound	**TOTAL**
2:30 - 3:30	3.1%	5.0%	100.0%	**6.4%**
2:45 - 3:45	2.8%	4.4%	100.0%	**5.8%**

Notes:

1) Volumes from 3:30-3:45 PM were estimated based following:

a) For entering/exiting school driveway trips, the estimated volumes were based on detailed trip generation study calculations and the directional distribution of driveway trips during the 2:30PM-3:30PM period.

b) For non-school driveway trips, the estimated volumes were based on the 2:30-2:45PM period for the turning volumes and the 2:30- volume or 50% of the 3:15-3:30PM volume (whichever was greater) for the thru movements.

Intersection = 84th Ave NE/Driveway
Peak Period = Afternoon Peak
Count Date = Thur 5/12/22

15-Minute Volumes

	Driveway				84th Ave NE				84th Ave NE				
Time Starting	EBU	EBL	EBT	EBR	NBU	NBL	NBT	NBR	SBU	SBL	SBT	SBR	**TOTAL**
2:30		0		1	0	1	9		0		15	0	**26**
2:45		0		0	0	3	22		1		20	3	**49**
3:00		10		8	1	8	28		0		26	6	**87**
3:15		4		10	0	5	35		0		26	3	**83**
3:30		1		1	0	1	18		0		15	1	**37**
	0	15	0	20	1	18	112	0	1	0	102	13	

Peak Hour Volumes

	Driveway				84th Ave NE				84th Ave NE				
Peak Hour	EBU	EBL	EBT	EBR	NBU	NBL	NBT	NBR	SBU	SBL	SBT	SBR	**TOTAL**
2:30 - 3:30	0	14	0	19	1	17	94	0	1	0	87	12	**245**
2:45 - 3:45	0	15	0	19	1	17	103	0	1	0	87	13	**256**

Peak Hour Factors

	Driveway	84th Ave NE	84th Ave NE	
Peak Hour	Eastbound	Northbound	Southbound	**TOTAL**
2:30 - 3:30	0.46	0.70	0.78	**0.70**
2:45 - 3:45	0.47	0.76	0.79	**0.74**

Heavy Vehicles

	Driveway				84th Ave NE				84th Ave NE				
Time Starting	EBU	EBL	EBT	EBR	NBU	NBL	NBT	NBR	SBU	SBL	SBT	SBR	**TOTAL**
2:30		0		0		0	0				1		**1**
2:45		0		0		0	1				1		**2**
3:00		0		0		0	1				2		**3**
3:15		1		0		1	1				0		**3**
3:30		0		0		0	0				1		**1**
	0	1	0	0	0	1	3	0	0	0	5	0	

Heavy Vehicle Calculations

	Driveway	84th Ave NE	84th Ave NE	
Peak Hour	Eastbound	Northbound	Southbound	**TOTAL**
2:30 - 3:30	3.0%	3.6%	4.0%	**3.7%**
2:45 - 3:45	2.9%	3.3%	4.0%	**3.5%**

Notes:

1) Volumes from 3:30-3:45 PM were estimated based following:

a) For entering/exiting school driveway trips, the estimated volumes were based on the "adjusted" peak hour trip generation from being 3% higher than the 2:30-3:30PM hour (see historical data in Appendix F) and the directional distribution of driveway trips during the 2:30-3:30PM period.

b) For non-school driveway trips, the estimated volumes were based on the 2:30-2:45PM volume or 50% of the 3:15-3:30PM volume (whichever was greater) for the thru movements.

Appendix C

Crash History

From WSDOT