Addendum No. 2
To the Plans, Specifications, Proposal and Contract

City of Kirkland
Fire Station 26 Renovation
9930 124th Ave NE, Kirkland, WA 98033
CIP # PSC 3006 000
JOB # 46-23-PW

Notice to All Plan holders:

This Addendum No. 2, containing the following revisions, additions, deletions, and/or clarifications is hereby made part of the Plan and Contract Documents for the above-named project. Bidders shall take this Addendum into consideration when preparing and submitting their bids. With issuance of this Addendum, it shall be incorporated into the Contract Documents.

Contractors shall acknowledge receipt of this Addendum in the place provided on the Bid Form. Failure to do so may disqualify the Bidder from consideration of its bid.

All other requirements of the contract documents remain in effect.

ISSUED THIS DATE:	December 7th, 2023
BID SUBMITTAL TIME/DATE/LOCATION:	Prior to 1:00 P.M. on December 12, 2023 at Cashier - City of Kirkland 123 5th Avenue Kirkland WA 98033

GENERAL

None

PROJECT NOTES/ CLARIFICATIONS

None

QUESTIONS & ANSWERS

(Questions received to date not answered by this addendum will be addressed by a future addendum)

1. **Question:** *Please clarify the contradiction between the irrigation drawing legend and the specs.*
   Answer: Refer to revised 32 84 00 Planting Irrigation section and L3.0 Irrigation Plan.

2. **Question:** *We are unable to find the Feeder Matrix on drawing E9.1.*
   Answer: Feeder Schedule added to Addendum 1. See Addendum 1 and revised schedule as part of Addendum 2.

PROJECT MANUAL MODIFICATIONS

The following sections are revised:

Item 1. Section 00 10 20 BIDDER's QUALIFICATIONS
a) Replace section issued for bid with attached section dated December 7, 2023.

Landscape Specifications

Item 1. Section 32 84 00 PLANTING IRRIGATION
a) Replace section issued for bid with attached section dated December 7, 2023.
b) Note that this section is reissued with Track Changes feature turned on. All other reissued spec sections are simply reissued in plain text and do not have the Track Changes feature turned on.

Architectural Specifications

Item 1. Section 08 36 13 SECTIONAL OVERHEAD DOORS
a) Revise section 2.5 H. to read "Coordinate wiring requirements and current characteristics of motors with building electrical system. Provide all power and control wiring from the point of connection including a low-voltage connection for the alerting system. Provide a Low Voltage Interface to activate door (Shut) in alert mode tied into a door manufacturer's timer to close module. The system must have a DISCRETE CLOSE ONLY mode. Alerting Contractor to provide a Dry Contact Closure for activating the Closing of the door."

Item 2. Section 08 71 00 FINISH HARDWARE
a) Replace section issued for bid with attached section dated December 7, 2023.

DRAWING MODIFICATIONS

The following Contract Drawings are revised:

Civil Drawings

Item 1. C1.0 DEMO & T.E.S.C. PLAN
1. Replace sheet issued for bid with attached sheet dated December 7, 2023.

Item 2. C3.0 PAVING AND GRADING
1. Replace sheet issued for bid with attached sheet dated December 7, 2023.

Landscape Drawings

Item 1. L1.0 PLANTING PLAN
1. Replace sheet issued for bid with attached sheet dated December 7, 2023. Changes include:
   a. Revise tree protection fence extents to accommodate electrical trenching.

Item 2. L3.0 IRRIGATION PLAN
1. Replace sheet issued for bid with attached sheet dated December 7, 2023. Changes include:
   a. Change Master Valve to HUNTER IBV.
   b. Change Remote Control Valve to HUNTER ICV-G.
   c. Change flow sensor model to SLFSI-T15.

Architectural Drawings

Item 1. A1.1 SITE PLAN

2. Replace sheet issued for bid with attached sheet dated December 7, 2023. Changes include:
    a. Dimensions provided for parking stall spacing and wheel stops.
    b. Southernmost site retaining wall shown with gray hatch to indicate a new wall per C3.00.

Item 2. A1.2 SITE DETAILS

1. Refer to AD 2 ASK-1 for revisions to 11/A1.2.

Item 3. A2.1 DEMO FLOOR PLAN LEVELS 1 & 2

1. Refer to AD 2 ASK-2 for revisions to demo work in Restroom 106.

Item 4. A2.5 FLOOR PLAN LEVELS 1 & 2

1. Replace sheet issued for bid with attached sheet dated December 7, 2023. Changes include:
    a. Revisions to extent of new work in Restroom 106.

Item 5. A2.7 ROOF PLAN

1. Replace sheet issued for bid with attached sheet dated December 7, 2023. Changes include:
    a. Addition of proposed location for source capture exhaust fan and silencer.
    b. Addition of notes and tags for support rails and duct penetrations.

Item 6. A3.1 EXTERIOR ELEVATIONS

1. Replace sheet issued for bid with attached sheet dated December 7, 2023. Changes include:
    a. ADD notes indicating custom color louvers.

Item 7. A4.2 EXTERIOR DETAILS

1. Replace sheet issued for bid with attached sheet dated December 7, 2023. Changes include:
    a. ADD detail 18/A4.2.
    b. ADD detail 19/A4.2.

Item 8. A4.3 EXTERIOR DETAILS

1. Refer to AD 2 ASK-3 for revisions to 19/A4.3.

Item 9 A4.4 EXTERIOR DETAILS

1. ADD detail 18/A4.4. Refer to AD 2 ASK-4.

Item 10. A5.1 ENLARGED FLOOR PLANS

1. Replace sheet issued for bid with attached sheet dated December 7, 2023. Changes include:
    a. ADD keynote N5.02.
    b. 1/A5.1: Revisions to Restroom 106.
    c. 5/A5.1: ADD floor grate and dimensions.

Item 11. A6.1, A6.2 REFLECTED CEILING PLAN – LEVELS 1 & 2

1. Add RCP General Note “9. PREP AND PAINT ALL EXTERIOR SOFFITS, TYP.”

Item 12. A8.3 INTERIOR DETAILS

2. Replace sheet issued for bid with attached sheet dated December 7, 2023. Changes include:
    a. Revise 11/A8.3.
    b. ADD 13/A8.3.

Item 13. A9.1 INTERIOR DETAILS

1. ADD Finish Schedule remark:
   8. AT ALL AREAS OF RSP, PROVIDE ALUMINUM J MOLDING AT BOTTOM OF GYP OR BACKER BOARD AND ENCAPSULATE RSP.

Item 14. A9.2 DOOR SCHEDULE

1. Replace sheet issued for bid with attached sheet dated December 7, 2023. Changes include:
   a. Revisions to hardware sets in door schedule.
   b. Revise door 208C to be door type C.
   c. 20/A9.2: revised door hardware graphics and edge protection added.

<u>Mechanical Drawings</u>

Item 1. M2.2 THIRD & FOURTH LEVELS

1. Refer to AD 2 MSK-1 for revisions to Tlt/Shwr 311.

Item 2. M2.3 ROOF PLAN

1. Refer to AD 2 MSK-3 for approximate location of source capture exhaust and silencer.

Item 3. M2.5 THIRD & FOURTH LEVEL CEILING PLAN

1. Refer to AD 2 MSK-2 for revisions to Tlt/Shwr 311.

<u>Electrical Drawings</u>

Item 1. E0.3 MECHANICAL EQUIPMENT CONNECTION SCHEDULE

2. Add copper feeder to DH-1 as follows: 1”C., 4#6, 1#10G
3. Revise copper feeder for CM-1 as follows: 1”C., 4#6, 1#10G.
4. Revise copper feeder for CM-2 as follows: 1”C., 4#8, 1#10G.
5. Revise circuit for ERV-1 to M1-56,58,60.
6. Revise circuit for ERV-2 to M1-62,64.
7. Revise circuit for ERV-3 to M1-66,68.

Item 2. E3.2 3RD AND 4TH FLOOR LIGHTING FLOOR PLAN

2. Replace sheet issued for bid with attached sheet dated December 7, 2023. Changes include:
   a. Add Flag Note 5 per attached revised sheet E3.2.
   b. Add Flag Note 5 to fixtures in attic space per attached revised sheet E3.2.

Item 3. E4.1 1ST AND 2ND FLOOR MECHANICAL POWER FLOOR PLAN

1. Replace sheet issued for bid with attached sheet dated December 7, 2023. Changes include:
   a. Add Flag Note 2 for Nederman Control Panel.
   b. Add Nederman Control Panel location to apparatus bay wall.
   c. Add EF-1 timer switch location to apparatus bay wall.

Item 4. E4.3 ROOF MECHANICAL POWER PLAN

1. Replace sheet issued for bid with attached sheet dated December 7, 2023. Changes include:
   a. Add Flag Note 1.
   b. Add connection to bidder designed source capture exhaust system.

Item 5. E8.2 ELECTRICAL DETAILS

1. Replace sheet issued for bid with attached sheet dated December 7, 2023. Changes include:

a. Revise circuiting shown on Detail 5, NEDERMAN CONTROL PANEL DETAIL.

Item 6. E9.1 ONE-LINE DIAGRAM

1. Replace sheet issued for bid with attached sheet dated December 7, 2023. Changes include:
    a. Revise feeder schedule per attached revised sheet E9.1.
    b. Revise Panel M1 feeder to 400N.
    c. Revise 400A/3P Spare to serve Panel M1. Spare out 225A/3P breaker previously serving Panel M1.
    d. Revise available fault current tag at Panel M1 to reflect feeder reconfiguration.

Item 7. E10.2 PANEL SCHEDULE

1. Replace sheet issued for bid with attached sheet dated December 7, 2023. Changes include:
    a. Revise Panel M1 to 400A and 84 Poles.
    b. Revised Panel M1 circuiting.

SUBSTITUTION REQUESTS

Generac Standby Generator	Energy Systems	Accepted

Sincerely,

Anneke J. Davis, P.E.	**Rod Steitzer, P.E.**
Senior Project Engineer	**Capital Projects Manager**

BIDDER'S QUALIFICATIONS

Each bidder submitting a proposal for this Project shall submit, as part of its bid, the following information:

1. Bidder (Contractor): _____

2. Contractor's Address: _____

3. Telephone Number and Area Code: _____

4. IRS Federal Employer's Identification Number: _____

5. Current State Unified Business Identification Number: _____

6. Number of years engaged in the construction business under the present company name.

   Number of Years: _____

   Name: _____

7. Total value of contracts in force: _____

8. To qualify for bidding for this project the General Contractor as the legal entity bidding the project shall have constructed or remodeled one (1) fire station, and one (1) other municipal project, each with a construction value of $3 million dollars or greater, within the past five (5) years.

9. **List below project(s) which meet the qualifications as outlined above.**
   (Attach additional project pages if required)

   Project Name: _____
   Project Value: _____
   Reference Name, phone number and email: _____

   Project Name: _____
   Project Value: _____
   Reference Name, phone number and email: _____

   Project Name: _____
   Project Value: _____
   Reference Name, phone number and email: _____

   Project Name: _____
   Project Value: _____
   Reference Name, phone number and email: _____

   Project Name: _____

Project Value:_____
Reference Name, phone number and email: _____

Project Name: _____
Project Value:_____
Reference Name, phone number and email: _____

Project Name: _____
Project Value:_____
Reference Name, phone number and email: _____

Project Name: _____
Project Value:_____
Reference Name, phone number and email: _____

10. Recent significant projects completed by Bidder including owner's name, Approximate cost, and completion date:

    1. _____

    2. _____

    3. _____

    4. _____

11. Washington State Contractor's Registration Number:_____

12. Bonding Reference:_____

    _____

13. Bonding Capacity:_____

Bidder:

By (Name): _____

Title: _____

Date:_____

This Form Must Be Submitted with the Bid.

END OF SECTION

PART 1 - GENERAL

1.1 RELATED DOCUMENTS

A. Drawings and general provisions of the Contract, including General and Supplementary Conditions and Division 1 Specification Sections, apply to this Section.

1.2 SUMMARY

A. Section Includes:

1. Piping.
2. Automatic control valves.
3. Sprinklers.
4. Quick couplers.
5. Controllers.
6. Boxes for automatic control valves.

B. Related Sections:

1. Section 329300 Plants.

C. Alternates: Refer to Section 012300.

1.3 PERFORMANCE REQUIREMENTS

A. General: Furnish and install a completely automatic irrigation system to provide adequate irrigation of all new and restored planting shown on the plans and described in specifications, complete and ready for operation. The work shall consist of providing and installing all material necessary for a complete system, including pipe, valves, fittings, automatic central control equipment, and all appurtenances related thereto. Included shall be all labor for trenching, plumbing, backfill, electrical connections and adjustments, mechanical connections, and other labor necessary for installation of satisfactorily operating systems. Whether mentioned or not, the intent is that the Contractor furnish a complete and operable system as indicated on the drawings.

B. Location of Sprinklers and Specialties: Design location is approximate. Make minor adjustments necessary to avoid plantings and obstructions such as signs and light standards. Maintain 100 percent irrigation coverage of areas indicated.

1.4 SUBMITTALS

A. Product Data: Submit product data in accordance with Section 013300 a minimum of 30 working days before beginning work, unless otherwise approved. Include data for all products to be installed in these systems. Include material showing manufacturer's name, catalog numbers, catalog cuts, technical data, and manufacturers' installation, operation, and maintenance instructions for each product.

B. Wiring Diagrams: For power, signal, and control wiring.

C. Zoning Chart: Show each irrigation zone and its control valve.

D. Controller Timing Schedule: Indicate timing settings for each automatic controller zone.

E. Point of Connection Water Pressure Test: Test water pressure at the irrigation system point of connection prior to beginning work. Submit results of test to Owner's Representative.

F. Site Inspection Report: Submit statement confirming a site inspection has been conducted, noting discrepancies between ground measures and plans, hazards or site conditions which will interfere with installation or operation of the system prior to beginning of work.

G. Operation and maintenance data.

1. Submit the name and address of permanent service organizations maintained or trained by the manufacturers that will render service within eight hours of receipt of notification of service request.
2. Zone Map: Submit an irrigation plan for the site indicating, by varying colors, the area of coverage for each control valve. Indicate the number and location of the valve. The number is to correspond to that on the controller for that zone.
3. Submit controller timing schedule indicating on a weekly basis the day, time, and duration of watering for each control valve.
4. Provide the zone map and controller timing schedule for each system, folded into a plastic envelope, of a size capable of being installed in the door of the controller.
5. Submit operating and maintenance guides for the entire system and for each piece of equipment in the system. Instructions for system winterization are to be included.

H. Record Drawings:

1. Maintain a complete set of record drawings, corrected daily, to show design and specification changes, and location of system components. Submit copies as requested.
2. At completion, submit reproducible Mylar plan at the same scale as the construction plans, indicating the elevations of mainlines, valves, backflow preventers, zone outlines, and other system elements, indicate locations with dimensions from building, curb lines, or other fixed site features.

1.5 QUALITY ASSURANCE

A. Electrical Components, Devices, and Accessories: Listed and labeled as defined in NFPA 70, by a qualified testing agency, and marked for intended location and application.

1.6 PROJECT CONDITIONS

A. Environmental Requirements: Perform work under environmental conditions suitable for the tasks being undertaken.

B. Ordinances, Codes, and Regulations: All local, municipal, and state laws, rules, and regulations governing or relating to any of this work are hereby incorporated into and made part of these specifications and their provisions shall be carried out by the Contractor. Anything contained in these specifications shall not be construed to conflict with above mentioned rules, regulations, or requirements. Where conflict may occur, rules, regulations, or requirements of the governing code shall be adhered to. However, when these specifications and/or drawings call for or describe materials, workmanship or construction of a better quality, higher standard or larger size, these specifications and/or drawings shall take precedence over the requirements of said rules, regulations, and codes.

C. Existing Conditions:

1. Visit the site and note conditions which affect work under this Section.
2. Locate all utilities, lines and piping in the work area. Provide adequate protection during all phases of work.
3. Repair utilities, lines, and piping damaged by this work to the satisfaction of the Owner of the line, at no change in Contract Price.
4. Notify Owner's Representative of unsatisfactory conditions. Proceed with work only after conditions have been corrected.
5. Field Measurements: Take field measurements of irrigated areas to determine if differences occur between plans and ground dimensions. Notify Owner's Representative of differences before proceeding with work.
6. Irrigation is not permitted during the following conditions:
   a. When the temperature is less than 35 degrees F or greater than 90 degrees F.
   b. When the planting area's soil is saturated, frozen, or dry.
   c. When wind velocities are greater than 30 mph.

1.7 MATERIALS AND WORKMANSHIP

A. General: Whenever any material is specified by name/number, such specifications are for the purpose of facilitating a description of materials and establishing quality, and shall be deemed and construed to be followed by the words "or approved equal." No substitutions will be permitted which have not been submitted for prior approval to Owner's Representative. All materials shall be new, without flaws or defects and shall be the best of their class and kind. Furnish sufficient descriptive literature and/or samples for any material submitted as "equal" substitutes.

B. Workmanship: All materials and equipment shall be installed in a neat and professional manner. The Owner or Owner's representative reserves the right to direct removal and replacement of any items, which in their opinion do not present an orderly and neat or professional appearance. Such removal and replacement shall be done, when directed in writing, at Contractor's expense without additional cost to Owner.

1.8 SEQUENCING AND SCHEDULING

A. Complete irrigation system installation and make fully operational before landscape seeding and sodding takes place.

1. Planting and soil preparation is not permitted during the following conditions:

a. When the temperature is less than 35 degrees F or greater than 90 degrees F.
b. When the planting area's soil is saturated, frozen, or dry.
c. When wind velocities are greater than 30 mph.

B. Thirty days prior to beginning work, submit a work schedule to include dates, location, and type of work to be performed.

1.9 WARRANTY

A. Refer to the General and Supplementary General Conditions.

B. Additional Requirements:

1. Repair settling of trenches. Include complete restoration of plantings, mulch, grades, pavements, or other improvements.
2. Correct irrigation system problems or damage within five working days of notice until final acceptance of the irrigation system.

PART 2 - PRODUCTS

2.1 PIPES, TUBES, AND FITTINGS

A. Comply with requirements in piping schedule for applications of pipe, tube, and fitting materials, and for joining methods for specific services, service locations, and pipe sizes.

B. PVC Pipe: ASTM D 1785, PVC 1120 compound, Schedules 40 and 80.

1. PVC Socket Fittings: ASTM D 2466 Schedules 40 and 80.
2. PVC Threaded Fittings: ASTM D 2464, Schedule 80.
3. PVC Socket Unions: Construction similar to MSS SP-107, except both headpiece and tailpiece shall be PVC with socket ends.

C. PVC Sleeves: 4”, 6” or 8” class 200 PVC as indicated on the plans.

2.2 PIPING JOINING MATERIALS

A. Solvent Cements for Joining PVC Piping: ASTM D 2564 type 711 **gray**. No Wet 'n Dry or 725 type cements. Include **purple** primer according to ASTM F 656.

B. Use Teflon tape on all threaded fittings, regardless of pipe type.

C. Plastic, Pipe-Flange Gasket, Bolts, and Nuts: Not permitted.

2.3 MANUAL VALVES

A. Isolation Ball Valves:

1. Description: Brass Bal Valve, Two-Piece Body, Full Port. Minimum 400 PSI non-shock working pressure. Same size as pipe
2. Basis of design: Nibco T-FP600A

B. Master Valve:

1. Description: Cast-bronze body, normally closed, diaphragm type with manual-flow adjustment, and operated by 24-VAC solenoid – Hunter IBV brass.

C. Control Valves:

1. Spray and rotor zones: Hunter ICV-G plastic, size per valve key.
2. Drip zones: Hunter ICZ-101-40-LF

D. Double Check Backflow Assembly: Zurn 950 XLT2, size as detailed.

2.4 QUICK COUPLERS

A. Description:

1. General: Rain Bird 3-RC
2. Quick coupler keys and hose swivel ells, brass, size and type to fit quick coupler.

2.5 SPRINKLER HEADS

A. General: As described on the Equipment Legend.

2.6 SWING JOINTS

A. Swing joints for quick couplers must be triple swing joints using Schedule 80 PVC with threaded fittings. Swing joints must consist of street ells, ells, and nipples for full adjustability. Quick coupler assemblies must be installed in valve boxes, per the Details.

B. Swing joints for spray heads shall be flexible 1/2-inch funny pipe triple swing joints assembly.

C. Swing joints for rotor heads with 3/4-inch FPT shall be prefabricated swing joints; for irrigation heads, must be triple swing joints, using Schedule 80 or Class 315 PVC threaded fittings. Swing joints must consist of street ells, ells, and nipples for full adjustability. Fittings must have "O" ring seals.

2.7 DRIP IRRIGATION

A. Drip tube:

1. Drip tube: Netafim Techline CV: TLCV-06-12
2. Supply and Exhaust Header: Schedule 40 PVC pipe, size per plan, min 3/4-inch
3. Fittings: 1/2-inch barbed fittings

B. Air Relief Valve

1. Netafim 65ARIA075 in round valve box

C. Manual Flush/Drain Valve

1. 3/4-inch PVC ball valve in round valve box.

2.8 CONTROLLER

A. Description:

1. Weathermatic SL1600 with added modules as needed to accommodate all zones.
2. AirCard for flow sensor and cellular connectivity.
3. Wireless Rain/Freeze sensor.

2.9 FLOW SENSOR

A. Flow Sensor: Weathermatic SLFSI-T10

2.10 LOW VOLTAGE CONTROL WIRE AND CONNECTORS:

A. Control Wire: Wire, solid copper, UL listed for direct burial in ground, minimum size #14 AWG. Common wire shall be #12 AWG. Increase size as needed for length of wire run.

B. Wire Connectors: 3-M DBY or DBR waterproof electrical connectors.

C. Minimum size of wire is to be determined strictly by the following chart:

Maximum Length of Common Wire

No. of Valves	500-feet	1,000 feet	2,000 feet	3,000 feet
1	14	14	14	14
2	14	14	14	10
3	14	14	10	8
4	14	14	10	8
5	14	10	8	6
6	14	10	6	6
7	14	8	6	4
8	14	8	6	4
9	14	8	4	4
10	10	6	4	2
11	10	6	4	-

D. Control wires shall be color coded as follows:

1. Neutral or common wire - White.
2. Lead-in wire – Each controller and WOB shall have a different color, using Red, Black, and Yellow.
3. Spare wire – Orange.
4. Control wires to be installed in 1 1/2-inch minimum PVC schedule 40 sleeve under all paved areas.

E. Flow sensor wire: PE-89 communication cable.

F. Tracer wire:

1. Solid copper per ASTM B-3 14 gauge.
2. Insulation purple.
3. High Molecule Weight Polyethylene (HMWPE).
4. Insulation meets ASTM D-1248, Type I, Category 4, Grades E4 and E5.

2.11 VAULTS

A. Plastic Boxes:

1. Description: Control valve boxes to be Carson/Oldcastle Pro Series vaults as detailed, Carson extensions as required. Quick coupler boxes to be Carson Pro Series 10” round vaults. All boxes to have locking T-type covers, bolt installed. Size per detail on plan.

B. Drainage Backfill: Cleaned gravel or round stone, graded from 3/4 inch minimum to 1-1/2 inches maximum, no fines.

2.12 OTHER MATERIALS

A. Trench Backfill: Masons sand.

B. "Air Compressor" Valve: Size to fit quick coupling valve keys.

C. All other materials, not specifically described but required for a complete and proper irrigation system installation, shall be new, first quality of their respective kinds, and subject to approval of Owner or his representative:

PART 3 - EXECUTION

3.1 EARTHWORK

A. Excavating, trenching, and backfilling are specified in Division 31 Section "Earth Moving."

3.2 PIPING INSTALLATION

A. Protection: The Contractor shall exercise care in handling, loading, unloading, and storing to avoid damage. The pipe and fittings shall be stored under cover and shall be transported in a vehicle with a bed long enough to allow the length of pipe to lay flat, so as not to be subject to undue bending or concentrated external load at any point. Any pipe that has been dented or damaged shall be discarded until such damage has been cut out and the pipe is rejoined with a coupling.

B. Installation: No piping shall occur unless the Point of Connection is installed and water is available for flushing.

C. All pipe within buildings to be installed by Mechanical.

D. Trench Depth: Excavate straight trenches to a depth of 3" below invert of pipe, unless otherwise indicated. Unless otherwise specified, trenches shall be deep enough to allow 12" cover over lateral lines and 18" cover over supply main lines. 24" maximum cover. All trenches must be straight and not have abrupt changes in grade. Excavate straight and true with bottom uniformly sloped to low points. Trench bottoms with uniform slope, free of rocks or sharp-edged objects. Install pipe with label facing up.

E. Route irrigation lines around roots of existing trees. Care shall be exercised by the Contractor when excavating trenches near existing trees. Trenches having exposed tree roots shall be backfield within 24 hours unless adequately protected by moist burlap or canvas directed by the Owner’s Representative. Pipe shall lay side by side in trench. No stacking of pipe permitted.

F. Paved Areas: Sleeve all pipe under paved areas.

G. Backfill: Backfilling shall be done when pipe is not in an expanded condition due to heat or pressure. Cooling of the pipe can be accomplished by operating system for a short time before backfilling, or by backfilling in the early part of the morning before heat of the day. Backfill shall contain no lumps or rocks larger than 1 inch.

H. Compaction: Use hand-operated plate type vibratory or other suitable hand tampers in areas not suitable for larger rollers or compactors. Compact initial backfill material surrounding pipes and conduit to 90 percent maximum density. For pipes, conduits and sleeves under roads and slabs, compact backfill as specified herein for other utilities under roads and slabs. General: Install in a manner so as to provide for expansion and contraction as recommended by manufacturer. Cut plastic pipe to ensure a square cut. Remove burrs at cut ends prior to installation. Install piping free of sags and bends. Solvent-weld or slip seal all plastic joints. Only solvent recommended by pipe manufacturer shall be used. Install all plastic pipe and fittings as shown and instructed by pipe manufacturer. Install with label facing up. Contractor shall assume full responsibility for correct installation.

I. Install groups of pipes parallel to each other, spaced minimum 3” apart to permit servicing.

J. Install PVC piping in dry weather when temperature is above 40 deg F. Allow joints to cure at least 24 hours at temperatures above 40 deg F before testing.

3.3 JOINT CONSTRUCTION

A. Remove scale, slag, dirt, and debris from inside and outside of pipe and fittings before assembly.

B. Joints: All plastic to metal joints shall be made with plastic Schedule 80 male adapters. Care should be taken at solvent joints not to use an excess amount of solvent. Allow PVC joints to set at least 24 hours before pressure is applied to system. Use pre-primer at joints.

C. PVC Piping Solvent-Cemented Joints: Clean and dry joining surfaces. Join pipe and fittings according to the following:

1. Comply with ASTM F 402 for safe-handling practice of cleaners, primers, and solvent cements.
2. PVC Pressure Piping: Join schedule number, ASTM D 1785, PVC pipe and PVC socket fittings according to ASTM D 2672. Join other-than-schedule-number PVC pipe and socket fittings according to ASTM D 2855. Use purple primer and type 705 gray or 721 blue glue. No Wet 'n Dry or type 725 or 738 glue.
3. PVC Non pressure Piping: Join according to ASTM D 2855.

3.4 VALVES

A. General: Stake location of all valve boxes for approval prior to installation. Install as detailed on plans. Before installation, the supply line must be thoroughly flushed. Use valve box extensions to ensure that box extends completely below the bottom of the valve. Wire loops required at all valve boxes. Install locking cover bolts. Use Teflon tape only, no pipe dope.

B. Use factory solenoid as detailed.

3.5 IRRIGATION HEADS

A. General: Install all heads as detailed on drawings, adjusting location as necessary to achieve maximum coverage as intended. Heads adjacent to walks, walls or curbs and other paved areas shall be set 4-inches from edge of paving. Balance and adjust all nozzles after entire system is operable. Set heads perpendicular to finish grade unless otherwise indicated.

B. Adjustment: All nozzles on stationary sprinklers or spray heads shall be tightened after installation. All sprinklers having an adjusting screw, adjusting stem, or adjusting friction collars shall be adjusted on a lateral line of circuit as required for proper arc, coverage, radius, diameter, and/or gallonage discharge.

3.6 AUTOMATIC IRRIGATION CONTROL SYSTEM

A. Equipment Mounting: Wall mount controller(s) as directed by Owner's Representative.

B. General: Install electrical Control Wire and Conduit as shown on drawings and/or specified. No splices of wires between valves and controller. Electrical wiring (120 VAC) shall be installed according to local code. A licensed electrician must perform hard wiring of controller(s), and the work must be permitted per City requirements. The cost of all electrical work necessary to make the automatic equipment operate properly shall be included in this contract.

C. Conduit for power supply wires shall be installed as shown on Plans and Details and controller manufacturers shop drawings. The ends of all conduits, whether shop cut or field cut, shall be reamed to remove burrs and rough edges. Cuts shall be made square and true. Conduit bends, except factory bends, shall have a radius of not less than six times the inside diameter of the conduit. A 3/16-inch polyethylene pull rope shall be installed in all conduits with two feet of pull rope extended beyond the conduit openings and then secured. All conduit shall be free of debris. All conduit openings shall be sealed with duct tape to prevent fouling.

D. Connections at Controller: Each control valve is connected to one station of controller and has wire sizes as shown or as specified. Provide separate common ground wire system. Provide junction box at controller location for connection. Connect master valve to master valve start circuit on controller.

E. Underground Splices: Vinyl insulated connectors and sealed in epoxy resin. Splices to be made in electrical junction boxes. 3M-DBY or approved.

3.7 FIELD QUALITY CONTROL

A. Tests and Inspections:

1. As-Builts: Draft and up to date as-built drawings are required on site for all testing and inspections.
2. Schedule: Provide 4 days' notice for test requests. Leak Test: After installation, charge system and test for leaks. Repair leaks and retest until no leaks exist. Request no tests until confident work will pass.

3. Main Line Pressure Test: After flushing is complete, pressure test mainline with all valves installed in operating order (flow control in working position), and associated isolation valves open, to 150 psi. System will pass test when it maintains less than 5% drop in a 30-minute time period in presence of Owner's Representative. Main line will be tested as one integral and complete unit at the time of the Punch List. Subsequent breaks or other breaches of mainline integrity require retesting of entire mainline.
4. Operational Test: After electrical circuitry has been energized, operate controllers and automatic control valves to confirm proper system operation.
5. Test and adjust controls and safeties. Replace damaged and malfunctioning controls and equipment.
6. Perform a water coverage test in presence of Owner's Representative to determine whether water coverage and operation of system is adequate for planting. If system is determined by Owner's Representative to be inadequate due to poor workmanship or materials, replace or repair and test repeated until accepted. Dry spots will not be acceptable.

B. Irrigation products will be considered defective if they do not pass tests and inspections.

C. Prepare test and inspection reports.

3.8 ADJUSTING

A. Adjust settings of controllers.

B. Adjust automatic control valves to provide flow rate at rated operating pressure required for each sprinkler circuit.

3.9 PROTECTION

A. Deactivate and drain system prior to onset of freezing season and reactivate at onset of spring season. Accomplish each at least once during warranty period. If construction is completed when system is not in use, winterize after testing. Certify by letter dates of winterization / activation. Repair damage from failure to comply.

B. When using compressed air to winterize the system, do so in short cycles at no more than 40 psi air pressure. Do not allow pipe close to the compressor to get hot to the touch.

END OF SECTION

PART 1 - GENERAL

1.1 RELATED DOCUMENTS

A. Drawings and general provisions of the Contract, including General and Supplementary Conditions and Division 01 Specification Sections apply to this Section.

1.2 SUMMARY

A. Work under this section includes finishing and installing the finish and security hardware requirements for the project. Items not specifically mentioned but necessary to complete the work, shall be furnished, matching the items specified in quality, and finish.

B. Key Abbreviations: The following Key abbreviations apply to this section:

1. HW Hardware
2. MHO Magnetic Hold Open
3. PH Panic Hardware
4. RM Removable Mullion
5. TH Threshold

C. Related Sections:

1. Steel Doors and Frames covered under Section 08 11 13.
2. Flush Wood Doors covered under Section 08 14 16.
3. Aluminum Framed Entrances covered under Section 08 42 13.
4. Sectional Overhead doors under Section 08 36 13.
5. Aluminum-Framed Storefronts under Section 08 42 13.
6. Security Access under Division 28.

1.3 QUALITY CONTROL

A. Supplier: Finish Hardware shall be supplied by recognized builder's hardware supplier who has been furnishing hardware in the same area as the project for a period of not less than two years. The supplier's organization shall include a member of the American Society of Architectural Hardware Consultants who is available at all reasonable times during the course of the work to meet with the Owner, Architect, or Contractor for project hardware consultation. Supplier shall be located within 200 miles of the project. Supplier shall be a distributor for the specified products, not a broker. Supplier shall maintain a warehouse and stock of specified hardware and replacement parts.

B. Installer: Finish Hardware shall be installed only by experienced tradesmen in compliance with trade union jurisdictions, either at the door and frame fabrication plant or at the project site.

C. Codes: All Finish Hardware shall comply with applicable local and/or state current building codes. Hardware for fire-rated openings shall also be in compliance with all fire building codes applicable to the district in which the building is located. Provide only hardware which has been tested and listed by UL for the types and sizes of doors required, and which complies with the requirements of the Door and Door Frame Labels.

1.4 ACTION SUBMITTALS

A. Product Data: Submit Manufacturer's Product Data for each item of finish hardware.

B. Hardware Schedule:

1. Organized into "Hardware Sets" and indicating complete designation of every item required for each door or opening. List in a vertical form. Review of hardware schedule does not relieve the Contractor of responsibility to fulfill project requirements in accordance with contract documents.
2. Schedule must be in vertical form, including all quantities, stock numbers, finishes, and sizes. List hardware for each door opening separately. Schedules prepared in a coded form are not acceptable and will be returned without review.

FORMAT OF SCHEDULE:

Heading 5

1 single Door 5 Corridor 1120 from Dental Lab 1320 – RHR 110
3'0 x 7'0 x 1-3/4" Wd x Hm HW-4

1-1/2 Pr. Butts		TA2714 26D 4-1/2 x 4-1/2
1	Lockset	45H7INL 15M x 32D
1	Closer	QDC115- 689
1	Kick Plate	5153 12 x 34 (Push Side)
1	Wall Stop	QU W307 26D
3	Silencers	IV 20R

3. After the schedules have been reviewed, distribute corrected schedules to Owner and Architect.

C. Templates: Furnish hardware templates for fabricators of doors, frames and other work to be factory prepared for hardware. Upon request, check shop drawings of such other work to confirm that adequate provisions will be made for the prior installation of hardware.

D. Provide electrical drawings & point to point drawings for electric hardware.

1.5 CLOSEOUT SUBMITTALS

A. Maintenance Data: For all door hardware products with sequence of items, materials and methods used for proper cleaning and maintenance of each item.

1.6 DELIVERY, STORAGE, AND HANDLING

A. Packaging: Each item or package is to be separately tagged with identification related to final hardware schedule. Basic installation instructions shall be included.

B. Storage: Provide locked room at the jobsite for storage of hardware.

1.7 GUARANTEE

A. Finish hardware shall be guaranteed against defects in workmanship and operation for a period of one year, backed by a factory guarantee of the hardware manufacturer, except the door closers shall be so guaranteed for ten years. No liability shall be assumed by the hardware supplier where faulty operation is due to improper installation or failure to exercise normal maintenance.

PART 2 - PRODUCTS

2.1 GENERAL REQUIREMENTS

A. Provide specified door hardware as required to make doors fully functional, compliant with applicable codes, and secure to extent indicated.

B. Door Pulls and Push Plates:

1. Provide door pulls and push plates on doors without a lockset, latchset, exit device, or auxiliary lock unless otherwise indicated.

C. Closers:

1. Provide door closer on each exterior door, unless otherwise indicated.
2. Provide door closer on each fire-rated and smoke-rated door.

D. Thresholds:

1. Exterior Applications: Provide at each exterior door, unless otherwise indicated.

E. Smoke and Draft Control Seals:

1. Provide gasketing for smoke and draft control doors (Indicated as "S" on Drawings) that complies with local codes, requirements of assemblies tested in accordance with UL 1784.

F. Weatherstripping and Gasketing:

1. Provide weatherstripping on each exterior door at head, jambs, and meeting stiles of door pairs, unless otherwise indicated.
2. Provide door bottom sweep on each exterior door, unless otherwise indicated.
3. Fabricate as continuous gasketing, do not cut or notch gasketing material.

G. Electrically Operated and/or Controlled Hardware: Provide necessary power supplies, power transfer hinges, relays, and interfaces as required for proper operation; provide wiring between hardware and control components and to building power connection in compliance with NFPA 70.

H. Fasteners:

1. Provide fasteners of proper type, size, quantity, and finish that comply with commercially recognized standards for proposed applications.
2. Provide machine screws for attachment to reinforced hollow metal and aluminum frames.
3. Provide stainless steel machine screws and lead expansion shields for concrete and masonry substrates.
4. Provide wall grip inserts for hollow wall construction.
5. Fire-Resistance-Rated Applications: Comply with NFPA 80.

6. Concealed Fasteners: Do not use through or sex bolt type fasteners on door panel sides indicated as concealed fastener locations, unless otherwise indicated or required per manufacturer's testing requirements.

2.2 PERFORMANCE REQUIREMENTS

A. Provide door hardware products that comply with the following requirements:

1. Applicable provisions of federal, state, and local codes.
   a. ICC (IBC).
   b. NFPA 101.
   c. Local codes as required.
2. Accessibility: ADA Standards and ICC A117.1.
3. Fire-Resistance-Rated Doors: NFPA 80, listed and labeled by qualified testing agency for fire protection ratings indicated, based on testing at positive pressure in accordance with NFPA 252 or UL 10C.
4. Hardware Preparation for Steel Doors and Steel Frames: BHMA A156.115.
5. Hardware Preparation for Wood Doors with Wood or Steel Frames: BHMA A156.115W.
6. Regulatory and Operational Requirements:
   a. Provide hardware for all openings, whether specified or not, in compliance with NFPA Standard No. 80, proper operation and local building code requirements. Where required, provide only hardware which has been tested and listed by UL or FM for types and sizes of doors required and complies with requirements of door and door frame labels. Label hardware, as required, for compliance with pressure testing criteria as dictated in IBC.
   b. Provide hardware which meets or exceeds handicap accessibility per local building code requirements. Conform to the Americans with Disabilities Act (ADA) of 1990 as amended by the D.O.J. September 15, 2010, as adopted by the Authority Having Jurisdiction (AHJ).
7. Products Requiring Electrical Connection: Listed and classified by UL (DIR) as suitable for the purpose specified.

2.3 HINGES

A. Manufacturers:

1. Listed in Door Hardware Schedule: Best
2. Substitutions: Hager, McKinney
3. Continuous hinges are as manufactured by Best. Equal products by ABH or Select are acceptable Properties:

B. Butt Hinges: As applicable to each item specified.

   a. Standard Weight Hinges: Minimum of two (2) permanently lubricated non-detachable bearings.
   b. Heavy Weight Hinges: Minimum of four (4) permanently lubricated bearings on heavy weight hinges.
   c. Template screw hole locations.
   d. Pins: Easily seated, non-rising pins.
   e. UL 10C listed for fire-resistance-rated doors.

C. Continuous Hinges: As applicable to each item specified.

   a. Geared Continuous Hinges: As applicable to each item specified.

1) Non-handed.
2) UL 10C listed for fire-resistance-rated doors.
3) Sufficient size to permit door to swing 180 degrees

D. Finishes: See Door Hardware Schedule.

E. Grades:

1. Butt Hinges: Comply with BHMA A156.1 and BHMA A156.7 for templated hinges.
2. Continuous Hinges: Comply with BHMA A156.26, Grade 1.

F. Types:

1. Butt Hinges: Include full mortise hinges.
2. Continuous Hinges: Include geared hinges.

G. Options: As applicable to each item specified.

H. Quantities:

1. Butt Hinges: Three (3) hinges per leaves up to 90 inches in height. Add one (1) for each additional 30 inches in height or fraction thereof.

a. Hinge weight and size unless otherwise indicated in hardware sets:

1) For doors up to 36 inches wide and up to 1-3/4 inches thick provide hinges with a minimum thickness of 0.134 inch and a minimum of 4-1/2 inches in height.
2) For doors from 36 inches wide up to 42 inches wide and up to 1-3/4 inches thick provide hinges with a minimum thickness of 0.145 inch and a minimum of 4-1/2 inches in height.
3) For doors from 42 inches wide up to 48 inches wide and up to 1-3/4 inches thick provide hinges with a minimum thickness of 0.180 inch and a minimum of 5 inches in height.
4) For doors greater than 1-3/4 inches thick provide hinges with a minimum thickness of 0.180 inch and a minimum of 5 inches in height.

2. Continuous Hinges: One per door leaf.

I. Applications: At swinging doors.

1. Provide non-removable pins at out-swinging doors with locking hardware and all exterior doors.

J. Products:

1. Butt Hinges:

a. Concealed or Exposed bearing, five (5) knuckle.
b. Plain Bearing, Five (5) Knuckle.

2. Continuous Hinges:

a. Aluminum geared hinges.

2.4 LOCK CYLINDERS

A. Manufacturers:

1. Listed in Door Hardware Schedule: Best

2. Substitutions: None – facility standard

B. Properties:

1. Lock Cylinders: Provide key access on outside of each lock, unless otherwise indicated.

   a. Provide cylinders from same manufacturer as locking device.
   b. Provide cams and/or tailpieces as required for locking devices.
   c. Provide cylinders with appropriate format interchangeable cores where indicated.

C. Material:

1. Manufacturer's standard corrosion-resistant brass alloy.

D. Products:

1. Rim/mortise.

2.5 Keys and Cores

A. Manufacturers:

1. Listed in Door Hardware Schedule: Best Cormax Patented or approved equal.

B. Properties: Complying with guidelines of BHMA A156.28.

1. Provide small format interchangeable core.
2. Provide keying information in compliance with DHI (KSN) standards.
3. Keying Schedule: Arrange for a keying meeting, with Architect, Owner and hardware supplier, and other involved parties to ensure locksets and locking hardware, are functionally correct and keying complies with project requirements.
4. Keying: Master keyed.

   a. Contractor to coordinate all hardware delivery schedules and end user key meetings.

5. Include construction keying and control keying with removable core cylinders.
6. Do not make brass construction cores and construction control and operating keys a part of Owner's permanent keying system, nor furnish in the same keyway (or key section) as Owner, permanent keying system.
7. Provide Keys:

   a. Building Grand Master Keys: 4 each
   b. Master Keys: 4 each.
   c. Construction Keys: 6 each.
   d. Construction Control Keys: 2 each.
   e. Control Keys: 2 each.
   f. Change Keys: 2 each per lockset or cylinder.

8. Deliver keys with identifying tags to Owner by security shipment direct from manufacturer.
9. Permanent Keys and Cores: Stamped with applicable key marking for identification. Do not include actual key cuts within visual key control marks or codes. Stamp permanent keys "Do Not Duplicate."
10. Include installation of permanent cores and return construction cores to hardware supplier. Construction cores and keys to remain property of hardware supplier.

2.6 MORTISE LOCKS

A. Manufacturers:

1. Listed in Door Hardware Schedule: Best 45H
2. Substitutions: None – facility standard

B. Properties:

1. Mechanical Locks: Manufacturer's standard.

a. Fitting modified ANSI A115.1 door preparation.
b. Door Thickness Coordination Fitting 1-3/4 inch to 2-1/4 inch thick doors.
c. Latch: Solid, one-piece, anti-friction, self-lubricating stainless steel or manufacturer's standard anti friction as required.

1) Latchbolt Throw: 3/4 inch, minimum.

d. Auxiliary Deadlatch: One piece stainless steel, permanently lubricated.
e. Backset: 2-3/4 inch.
f. Lever Trim:

1) Functionality: Allow the lever handle to move up to 45 degrees from horizontal position prior to engaging the latchbolt assembly.
2) Strength: Locksets outside locked lever designed to withstand minimum 1,400 inch-lbs of torque. In excess of that, a replaceable part will shear. Key from outside and/or inside lever will still operate lockset.
3) Spindle: Designed to prevent forced entry from attacking of lever.
4) Independent spring mechanism for each lever.
(a) Trim to be self-aligning and thru bolted.

2. Electrified Locks: Same properties as standard locks, and as follows:

a. Voltage: 24 VDC.
b. Function: Electrically locked (Fail Safe) or unlocked (Fail Secure), as indicated for each lock in Door Hardware Schedule.

C. Finishes: See Door Hardware Schedule.

1. Core Faces: Match finish of lockset.

D. Products: Mortise locks, including standard and electrified types.

2.7 CYLINDRICAL LOCKS

A. Manufacturers:

1. Listed in Door Hardware Schedule: Best 9K
2. Substitutions: None – facility standard

B. Properties:

1. Mechanical Locks:

a. Fitting modified ANSI A115.2 door preparation.
b. Door Thickness Fit: 1-3/8 inches to 2-1/4 inches thick doors.
c. Construction: Hub, side plate, shrouded rose, locking pin to be a one-piece casting with a shrouded locking lug.

1) Through-bolted anti-rotational studs.

d. Bored Hole: 2-1/8 inch diameter.

e. Backset: 2-3/8 inches unless otherwise indicated.
f. Latch: Single piece tail-piece construction.

1) Latchbolt Throw: 1/2 inch, minimum.

g. Cylinders:

1) Cylinder Core Types: Locks capable of supporting manufacturers' cores, as applicable.

h. Lever Trim:

1) Style: See Door Hardware Schedule.

2. Electrified Locks: Same properties as standard locks, and as follows:

a. Voltage: 24 VDC.
b. Function: Electrically locked (Fail Safe) or unlocked (Fail Secure), as indicated for each lock in Door Hardware Schedule.

C. Finishes: See Door Hardware Schedule.

1. Core Faces: Match finish of lockset.

D. Material: Manufacturer's standard for specified lock.

2.8 EXIT DEVICES

A. Manufacturers:

1. Listed in Door Hardware Schedule: Precision 2000
2. Substitutions: None – facility standard

B. Properties:

1. Touchpads: “T” style metal touchpads and rail assemblies with matching chassis covers end caps.
2. Latch Bolts: Stainless steel deadlocking with 3/4 inch projection using latch bolt.
3. Cylinder: Include where cylinder dogging or locking trim is indicated.
4. Strike as recommended by manufacturer for application indicated.
5. Sound dampening on touch bar.
6. Dogging:

a. Non-Fire-Resistance-Rated Devices: Manual dogging feature UNO
b. Fire-Resistance-Rated Devices: Manual dogging not permitted.

7. Handing: Field-reversible.

C. Grades: Complying with BHMA A156.3, Grade 1.

D. Standards Compliance:

1. Provide UL (DIR) listed exit device assemblies for fire-resistance-rated doors.
2. Comply with UL 10C.

E. Code Compliance: As required by authorities having jurisdiction in the State in which the Project is located.

2.9 DOOR PULLS AND PUSH PLATES

A. Manufacturers:

1. Listed in Door Hardware Schedule: Trimco
2. Substitutions: Rockwood, Ives

B. Properties:

1. Pull Type: Straight, unless otherwise indicated.
2. Push Plate Type: Flat, with square corners, unless otherwise indicated.

C. Grades: Comply with BHMA A156.6.

D. Material: Stainless steel, unless otherwise indicated.

E. Products:

1. Push-Pull Systems.

2.10 CLOSERS

A. Manufacturers:

1. Listed in Door Hardware Schedule: Best EHD9016
2. Substitutions: Per Division 1

B. Properties:

1. Surface Mounted Closers: Manufacturer's standard.

a. Construction: R14 high silicon aluminum alloy or cast iron.
b. Covers:

1) Type: Standard for product selected.
(b) Full.
2) Material: Plastic.
3) Finish: Painted.

C. Grades:

1. Closers: Comply with BHMA A156.4, Grade 1.

a. Underwriters Laboratories Compliance:
b. Testing Standards Compliance: Meeting requirements of UL 10C for positive pressure.

D. Code Compliance: As required by authorities having jurisdiction in the State in which the Project is located.

E. Types:

1. Rack-and-pinion, surface-mounted. 1-1/2 inches minimum bore.

F. Installation:

1. Mounting: Includes surface mounted installations.
2. Mount closers on non-public side of door and stair side of stair doors unless otherwise noted in hardware sets.
3. At outswinging exterior doors, mount closer on interior side of door.
4. Provide adapter plates, shim spacers, and blade stop spacers as required by frame and door conditions.

5. Where an overlapping astragal is included on pairs of swinging doors, provide coordinator to ensure door leaves close in proper order when automatic flush bolts are used

2.11 PROTECTION PLATES

A. Manufacturers:

1. Listed in Door Hardware Schedule: Trimco
2. Substitutions: Rockwood, Ives

B. Properties:

1. Plates:

a. Kick Plates: Provide along bottom edge of push side of every wood door with closer, except aluminum storefront and glass entry doors, unless otherwise indicated.
b. Edges: Beveled, on four (4) unless otherwise indicated.

2. Provide UL fire rated stamp/sticker where required.

C. Grades: Comply with BHMA A156.6.

D. Material: As indicated for each item by BHMA material and finish designation.

1. Metal Properties: Stainless steel.

E. Installation:

1. Fasteners: Countersunk screw fasteners

2.12 STOPS AND HOLDERS

A. Manufacturers:

1. Listed in Door Hardware Schedule: Trimco
2. Substitutions: Rockwood, Ives

B. General: Provide overhead stop/holder when wall or floor stop is not feasible.

C. Grades:

1. Door Holders, Wall Bumpers, and Floor Stops: Comply with BHMA A156.16 and Resilient Material Retention Test as described in this standard.

D. Material: Base metal as indicated for each item by BHMA material and finish designation.

E. Types:

1. Wall Bumpers: Bumper, concave, wall stop.
2. Floor Stops: Provide with rubber bumper floor stop, heavy duty as specified.

F. Installation:

1. Non-Masonry Walls: Confirm adequate wall reinforcement has been installed to allow lasting installation of wall bumpers.

2.13 THRESHOLDS

A. Manufacturers:

1. Listed in Door Hardware Schedule: National Guard
2. Substitutions: Reese, Pemko

B. Properties:

1. Threshold Surface: Fluted horizontal grooves across full width.

C. Grades: Thresholds: Comply with BHMA A156.21.

D. Types: As applicable to project conditions. Provide barrier-free type at every location where specified.

2.14 WEATHERSTRIPPING AND GASKETING

A. Manufacturers:

1. Listed in Door Hardware Schedule: National Guard
2. Substitutions: Reese, Pemko

B. Grades: Comply with BHMA A156.22.

C. Products:

1. Weatherstripping: See Door Hardware Schedule.
2. Door Bottom Seals:

a. Door Sweeps: See Door Hardware Schedule.
b. Door Shoes: See Door Hardware Schedule.

2.15 MISCELLANEOUS ITEMS

A. Manufacturers:

1. Listed in Door Hardware Schedule: Trimco
2. Substitutions: Ives, Rockwood

B. Properties:

1. Silencers: Provide at equal locations on door frame to mute sound of door's impact upon closing.

a. Single Door: Provide three on strike jamb of frame.
b. Pair of Doors: Provide two on head of frame, one for each door at latch side.
c. Material: Rubber, gray color.

2. Where aluminum frames include a gasket system, delete silencers.

2.16 FINISHES

A. Finishes: Provide door hardware of same finish, unless otherwise indicated.

1. Finish: 630; satin stainless steel. 652; satin chromium plated with steel base material, 626, satin chromium plated with brass/bronze base material and 689; aluminum painted, with any base material

PART 3 - EXECUTION

3.1 INSTALLATION

A. Installation by skilled mechanics to architect's satisfaction.

1. Conform strictly to manufacturer's templates and directions.
2. Conform to referenced IBC and UL requirements.

B. Adjust movable parts to operate perfectly at time of final acceptance.

1. Make further adjustments required during guarantee period.

C. Replace hardware which has been damaged by use when damage is caused by faulty installation.

D. Make mortises accurately to exactly receive hardware. Depth or Mortises such that hardware is flush with finish surfaces.

E. Fasteners: Drill appropriate size guide holes for all wood screws. Drill and tap metal doors and frames to receive manufacturer's machine screws.

1. Do not use sheet metal or "TEK" screws to install hardware.
2. Self tapping screws will not be allowed.
3. Use cast-in-place anchor bolts or steel expansion shield for all items supported by, or on, concrete.
4. Do not use through bolted fasteners that are exposed on the face of doors. Coordinate all hardware with door manufacturer for blocking locations

F. Place door stops and holders to allow maximum swing.

1. Doors not to contact anything but stop.

G. Thresholds: Cut and fit thresholds to profiles of door jambs with mitered corners and precision joints.

1. Set exterior thresholds in bed of butyl rubber sealant and fill all voids to exclude moisture.

a. Do not block any weep holes
b. Remove excess sealant.

2. Align the bevel of exterior thresholds with exterior face of door, unless detailed otherwise.
3. Thresholds shall be installed level.

H. Hardware Placement: Locate hardware on doors as follows:

1. Comply with accessibility code where more stringent requirements are indicated.
2. Dimensions are from the finished floor to centerline unless shown otherwise.

a. Lock/Latch: 40" centerline of strike.
b. Exit Device Cross Bar: 40" centerline of bar
c. Deadlock Cylinder: 48"
d. All other items are manufacturer's instructions or as directed.

3.2 HARDWARE GROUPS

MANUFACTURERS

Code	Name	
AC	Accurate	Barn Door ADA Locks
BE	Best Access Systems	Locks, Cylinders, Hinges, Closers, Electronic Components
DJ	Don-Jo	Wrap Around Plates
JO	Johnson Hardware	HD Barn Door Track System
NA	National Guard	Gaskets, Thresholds
PR	Precision	Exit Devices
RC	RCI	Power Supplies
TR	Trimco	Door Stops, Flush Bolts, Flat Goods

FINISH LIST

Code	Description
628	Satin Anodized Aluminum
626/652	Satin Chromium Plated
630	Satin Stainless Steel
689	Aluminum Painted
BLK	Black
GREY	Grey

OPTIONS

Code	Description
C	Quick Connect Wiring Option (Best, Precision)
VIB	Double Visual Indicator Option (Best)
LS	Latch Status Monitor (Best)
RQE	Request to Exit (Best)
CD	Cylinder Dogging (Precision)
LD	Less Dogging (Precision)
B4E	Beveled 4 Edges – Kick, Mop & Armor Plates Trimco)
CS	Counter Sinking Of Kick, Mop & Armor Plates (Trimco)
SMSS/EA	Stainless Machine Screws/Expansion Anchors (NGP)

Set #1 - Existing

Doors: 102A, 103A, 103C, 103D, 104A, 200B, 201A, 201B, 201C, 201D, 308A, 309A, 310A, 400A, 401A, 402A, 403A

NOTE: Existing door - reuse existing hardware.

Set #2 - Existing - Card Access

Doors: 100A

1	Lockset	45H-7D15H PATD	626	BE
*1	Electric Strike	F2164	630	RC
1	Closer	EHD9016 JT90	689	BE
*1	Harness	WH-6E		BE
*1	Harness	WH-192		BE
*1	Power Supply	DKPS-2A		RC

NOTE: Modify existing door and frame to accept new hardware as specified. Card reader by security access. Balance reuse existing.

Set #3 - Existing - Card Access

Doors: 103B

1	Wrap-Around	9K-CW	630	DJ
1	Lockset	9K3-7D15D PATD	626	BE
*1	Electric Strike	F2164	630	RC
1	Closer	EHD9016 JT90	689	BE
*1	Harness	WH-6E		BE
*1	Harness	WH-192		BE
*1	Power Supply	DKPS-2A		RC

NOTE: Modify existing door and frame to accept new hardware as specified. Card reader by security access. Balance reuse existing.

Set #4 - Hall - Existing - New Card Access

Doors: 110A

1	Wrap-Around	9K-CW	630	DJ
1	Lockset	9K3-7D15D PATD	626	BE
*1	Electric Strike	F2164	630	RC
*1	Harness	WH-6E		BE
*1	Harness	WH-192		BE
*1	Power Supply	DKPS-2A		RC

NOTE: Modify existing door and frame to accept new hardware as specified. Card reader by security access. Balance reuse existing.

Set #5 - Sleep Room

Doors: 300A, 301A, 302A, 303A, 304A, 305A, 306A, 307A

3	Hinges	CB179 4.5" x 4.5"	652	BE
1	Privacy Set	45H-0L15H VIB	626	BE
1	Closer/Stop	EHD9016 SIS90	689	BE
1	Armor Plate	KA050 36" x 2" LDW B4E CS	630	TR
1	Gasketing	5050 B Head & Jambs		NA
1	Auto Door Bottom	423 N		NA

Set #6 - Restroom

Doors: 105A, 106A, 311A, 312A, 313A, 314A

3	Hinges	CB179 4.5" x 4.5"	652	BE
1	Privacy Set	45H-0L15H VIB	626	BE
1	Armor Plate	KA050 36" x 2" LDW B4E CS	630	TR
1	Mop Plate	KM050 6" x 1" LDW B4E CS	630	TR
1	Wall Bumper	1270WV	630	TR
1	Gasketing	5050 B Head & Jambs		NA

Set #7 - Apparatus Bay - Card Access

Doors: 201E

2	Hinges	CB199 4.5” x 4.5” NRP	630	BE
*1	Electric Hinge	CECB199-12C 4.5” x 4.5”	630	BE
*1	Exit Device	C TS E2103 x V4908A	630	PR
1	Rim Cylinder	12E-72 PATD	626	BE
1	Closer/Stop	EHD9016 SDS90	689	BE
1	Armor Plate	KA050 36" x 2" LDW B4E CS	630	TR
1	Rain Drip	16 A-4” ODW		NA
1	Weatherstrip	5075 B Head & Jambs		NA
1	Door Sweep	200 NA		NA
1	Saddle Threshold	426 SSMS/EA		NA
*1	Harness	WH-6E		BE
*1	Harness	WH-12		BE
*1	Harness	WH-192		BE
*1	Power Supply	DKPS-2A		RC

NOTE: Card reader activation momentarily releases lever and allows access. Card reader by security access. Verify threshold application.

Set #8 - Electrical - Card Access

Doors: 206A

2	Hinges	CB199 4.5” x 4.5” NRP	630	BE
*1	Electric Hinge	CECB199-12C 4.5” x 4.5”	630	BE
*1	Exit Device	C TS E2103 x V4908A	630	PR
1	Rim Cylinder	12E-72 PATD	626	BE
1	Closer/Stop	EHD9016 SDS90	689	BE
1	Armor Plate	KA050 36" x 2" LDW B4E CS	630	TR
1	Rain Drip	16 A-4” ODW		NA
1	Weatherstrip	5075 B Head & Jambs		NA
1	Door Sweep	200 NA		NA
1	Saddle Threshold	426 SSMS/EA		NA
*1	Harness	WH-6E		BE
*1	Harness	WH-12		BE
*1	Harness	WH-192		BE
*1	Power Supply	DKPS-2A		RC

NOTE: Electrical room doors – cannot be programmed unlockable except by card access per NES code. Card reader activation momentarily releases lever and allows access. Card reader by security access. Verify threshold application.

Set #9 - Hall - Card Access

Doors: 316A, 316B

2	Hinges	CB199 4.5” x 4.5” NRP	630	BE
*1	Electric Hinge	CECB199-12C 4.5” x 4.5”	630	BE
*1	Exit Device	C TS E2103 x V4908A	630	PR
1	Rim Cylinder	12E-72 PATD	626	BE
1	Closer/Stop	EHD9016 SDS90	689	BE
1	Armor Plate	KA050 36" x 2" LDW B4E CS	630	TR
1	Weatherstrip	5075 B Head & Jambs		NA
1	Door Sweep	200 NA		NA
1	Saddle Threshold	426 SSMS/EA		NA
*1	Harness	WH-6E		BE
*1	Harness	WH-12		BE
*1	Harness	WH-192		BE
*1	Power Supply	DKPS-2A		RC

NOTE: Card reader activation momentarily releases lever and allows access. Card reader by security access.

Set #10 - Sliding System

Doors: 405A, 405B, 405C

1	Sliding Door Hardware	200WF Series x 2023 x 12	628	JO
1	Door Pull	1195-1 Type N Mounting	630	TR
1	Flush Pull	1061	626	TR

NOTE: Confirm door size with the architect/owner and provide accordingly. Door by others. Safety chain by others.

Set #11 - Decon - Card Access

Doors: 204A

2	Hinges	CB168 4.5" x 4.5"	652	BE
*1	Electric Hinge	CECB168-12C 4.5" x 4.5"	652	BE
*1	Electromechanical Lock	45HW-7DEU15H PATD C LS RQE	626	BE
1	Closer	EHD9016 JT90	689	BE
1	Armor Plate	KA050 36" x 2" LDW B4E CS	630	TR
1	Wall Bumper	1270WV	630	TR
1	Weatherstrip	5075 B Head & Jambs		NA
1	Door Bottom	36 EV		NA
1	Saddle Threshold	426 SSMS/EA		NA
*1	Door Position Switch	MC4		DM
*1	Harness	WH-6E		BE
*1	Harness	WH-50		BE
*1	Harness	WH-192		BE
*1	Power Supply	DKPS-2A		RC

NOTE: Card activation momentarily releases lever and allows access. Card reader by security access. Verify threshold application.

Set #12 - Kitchen - Card Access

Doors: 200A, 208A

1	Continuous Hinge	661HD	628	BE
1	Deadlatch	4900	628	AD
1	Lever Handle	4569-X01	130	AD
1	Mortise Cylinder	1E-74 PATD	626	BE
*1	Electric Strike	4105-08	630	RC
1	Door Pull	1191-4 Type N Mounting	630	TR
1	Closer/Stop	EHD9016 SDS90 DP90	689	BE
1	Door Sweep	200 NA		NA
1	Saddle Threshold	426 SSMS/EA		NA
*1	Door Position Switch	MC4		DM
*1	Harness	WH-6E		BE
*1	Harness	WH-192		BE
*1	Power Supply	DKPS-2A		RC

NOTE: Card activation momentarily releases trike and allows access. Card reader by security access. Gaskets by door manufacturer. Verify threshold application.

Set #13A - Decon

Doors: 204B

3	Hinges	CB179 4.5" x 4.5"	652	BE
1	Passage Set	45H-0N15H	626	BE
1	Closer/Holder	EHD9016 JTH90	689	BE
1	Armor Plate	KA050 36" x 2" LDW B4E CS	630	TR
1	Wall Bumper	1270WV	630	TR
1	Gasketing	5050 B Head & Jambs		NA
1	Threshold	653 A		NA

NOTE: Verify threshold application.

Set #13B – PPE Storage

Doors: 205A

3	Hinges	CB179 4.5" x 4.5"	652	BE
1	Passage Set	45H-0N15H	626	BE
1	Closer/Holder	EHD9016 SDS90 DP90	689	BE
1	Armor Plate	KA050 36" x 2" LDW B4E CS	630	TR
1	Gasketing	5050 B Head & Jambs		NA
1	Threshold	653 A		NA

NOTE: Verify threshold application.

Set #14 - Shop - Card Access

Doors: 207A

2	Hinges	CB199 4.5" x 4.5" NRP	630	BE
*1	Electric Hinge	CECB199-12C 4.5" x 4.5"	630	BE
*1	Electromechanical Lock	45HW-7DEU15H PATD C LS RQE	630	BE
1	Closer	EHD9016 SPA90	689	BE
1	Armor Plate	KA050 36" x 2" LDW B4E CS	630	TR
1	Floor Stop	1214H	626	TR
1	Rain Drip	16 A-4” ODW		NA
1	Weatherstrip	5075 B Head & Jambs		NA
1	Door Sweep	200 NA		NA
1	Saddle Threshold	426 SSMS/EA		NA
*1	Door Position Switch	MC4		DM
*1	Harness	WH-6E		BE
*1	Harness	WH-50		BE
*1	Harness	WH-192		BE
*1	Power Supply	DKPS-2A		RC

NOTE: Card activation momentarily releases lever and allows access. Card reader by security access. Verify threshold application.

Set #15 - Overhead Door

Doors: 208B

NOTE: Hardware by door manufacturer.

Set #16 - Exercise

Doors: 208C

3	Hinges	CB179 4.5" x 4.5"	652	BE
1	Passage Set	45H-0N15H	626	BE
1	Closer/Stop/Holder	EHD9016 SDSH90	689	BE
1	Armor Plate	KA050 36" x 2" LDW B4E CS	630	TR
1	Gasketing	5050 B Head & Jambs		NA
1	Threshold	653 A		NA

NOTE: Verify threshold application.

Set #17 – Decon - Existing

Doors: 201F

1	Armor Plate	KA050 36" x 2" LDW B4E CS	630	TR

NOTE: Modify existing door and frame to accept new hardware as specified. Remove existing kick plate. Balance reuse existing.

Set #18 - Office

Doors: 107A

3	Hinges	CB179 4.5" x 4.5"	652	BE
1	Lockset	45H-7AT15H PATD	626	BE
1	Closer/Stop/Holder	EHD9016 SISH90	689	BE
1	Armor Plate	KA050 36" x 2" LDW B4E CS	630	TR
1	Gasketing	5050 B Head & Jambs		NA

* Requires electronic coordination

END OF SECTION

NW 1/4 SEC. 04, TWP 25 N., RNG. 05 E., W.M.

CONTRACTOR TO NOTIFY OWNER AT LEAST ONE WEEK PRIOR TO BEGINNING ANY WORK THAT MAY HAVE AN IMPACT ON EXISTING TRESS FOR COORDINATION OF TREE PROTECTION WITH CITY ARBORIST. SEE LANDSCAPE PLANS AND SPECIFICATIONS FOR ADDITIONAL REQUIREMENTS.

0 10 20 40

1" = 20'

Notes:

1. TEMPORARY STOCKPILES MAY BE LOCATED ON SITE WITH PLASTIC SHEETING PER CITY OF KIRKLAND STANDARD DETAIL CK-E.05
2. REFER TO CITY OF KIRKLAND STANDARD CK-E.12 FOR SOIL AMENDMENT REQUIREMENT
3. SEE ARBORIST REPORT AND TREE PROTECTION SPECIFICATION FOR TREE PROTECTION AND REMOVAL PLAN. CONTRACTOR TO MAINTAIN NECESSARY TREE PROTECTION WHILE PERFORMING WORK WITHIN FENCE LIMITS. HAND DIG WITHIN TREE ROOT ZONES AS INDENTIFIED WITHIN ARBORIST REPORT.

Legend

- PROPERTY LINE (N 79°33'06" E 46.81')
- SAWCUT LINE
- REMOVE CURBING
- REMOVE CONCRETE PAVEMENT
- GRIND AND OVERLAY (SEE SHEET C3.00)
- REMOVE ASPHALT PAVEMENT
- REMOVE TREE(S) (Existing / Demo)
- EXISTING FENCING
- LIMITS OF CONSTRUCTION (LIMIT)
- TEMPORARY CONSTRUCTION FENCING (4 / C1.10)
- TREE PROTECTION FENCING (8 / C1.10)
- STRAW WATTLES (2 / C1.10)
- TEMPORARY CONSTRUCTION GATE
- SOIL STABILIZATION (6 / C1.10)
- INLET PROTECTION (7 / C1.10)

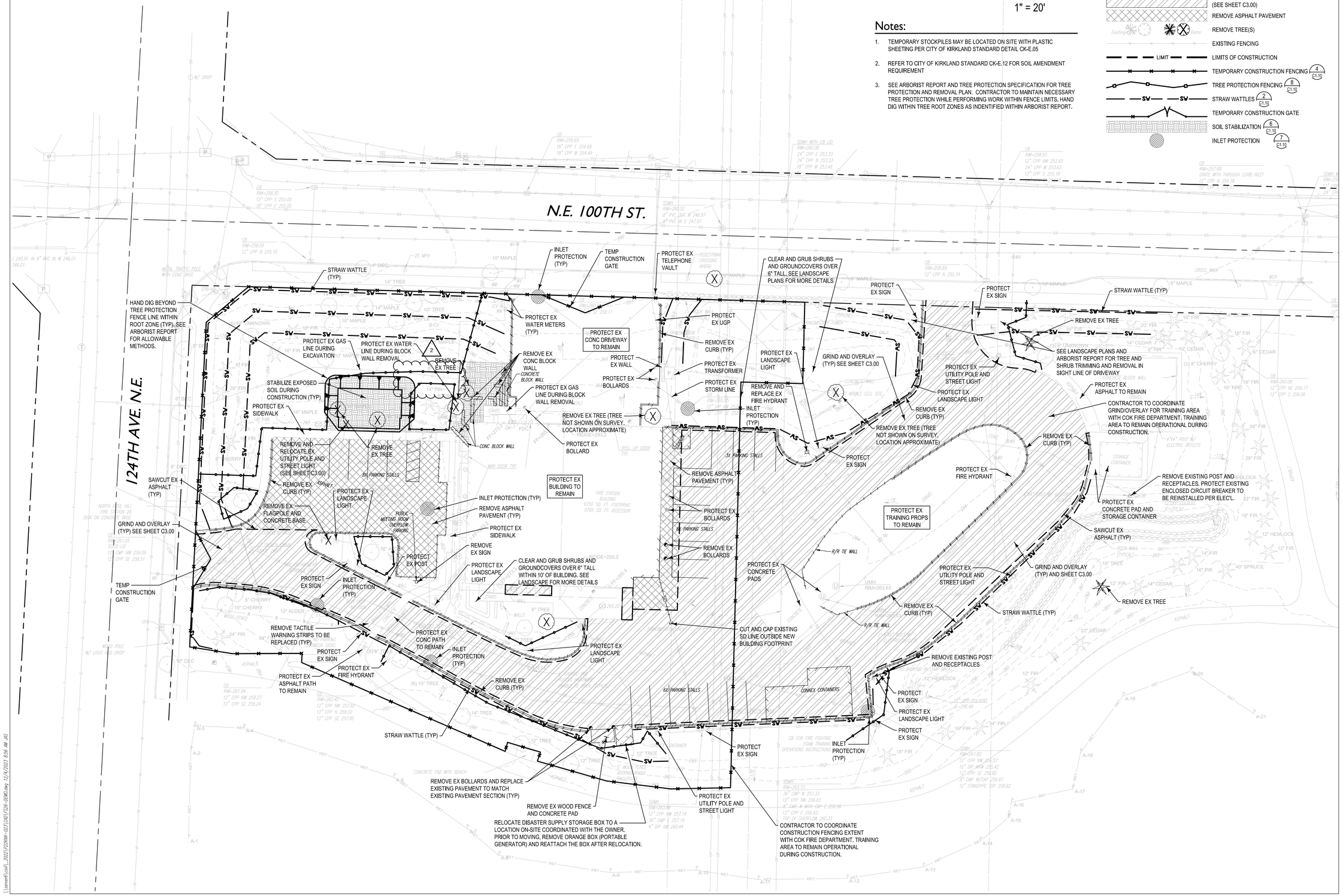

TCA ARCHITECTURE + PLANNING + DESIGN

6211 ROOSEVELT WAY NORTHEAST
SEATTLE, WA 98115
tel: (206) 522-3830
fax: (206) 522-2456

COUGHLIN PORTER LUNDEEN

801 SECOND AVENUE, SUITE 900
SEATTLE, WA 98104
(206) 343-0460 www.cplinc.com

JACLYN SPENCER, STATE OF WASHINGTON, 57563, REGISTERED PROFESSIONAL ENGINEER, 11/13/23

BID SET

No.	Description	Date:
2	ADDENDUM 2	12/7/23

Project Title:

FIRE STATION 26 RENOVATION

CITY OF KIRKLAND
9930 124TH AVE NE, KIRKLAND, WA

Sheet Title:

DEMO & T.E.S.C. PLAN

Scale: As Noted
Project No. : C210211-07
Date : 11/14/2023

Sheet Number :

C1.00

Call Before You Dig. 8-1-1 or 1-800-424-5555 Underground Service (USA)

\\server6\civil_2021\210211\CAD\C3D-DEMO.dwg 12/4/2023 8:56 AM JAS

CONTRACTOR TO NOTIFY OWNER AT LEAST ONE WEEK PRIOR TO BEGINNING ANY WORK THAT MAY HAVE AN IMPACT ON EXISTING TRESS FOR COORDINATION OF TREE PROTECTION WITH CITY ARBORIST. SEE LANDSCAPE PLANS AND SPECIFICATIONS FOR ADDITIONAL REQUIREMENTS.

ELECTRICAL CONDUIT SHALL BE ROUTED BENEATH LOCATION OF PROPOSED ASPHALT RESTORATION OR LANDSCAPING ONLY. SEE ELECTRICAL PLANS.

NW 1/4 SEC. 04, TWP 25 N., RNG. 05 E., W.M.

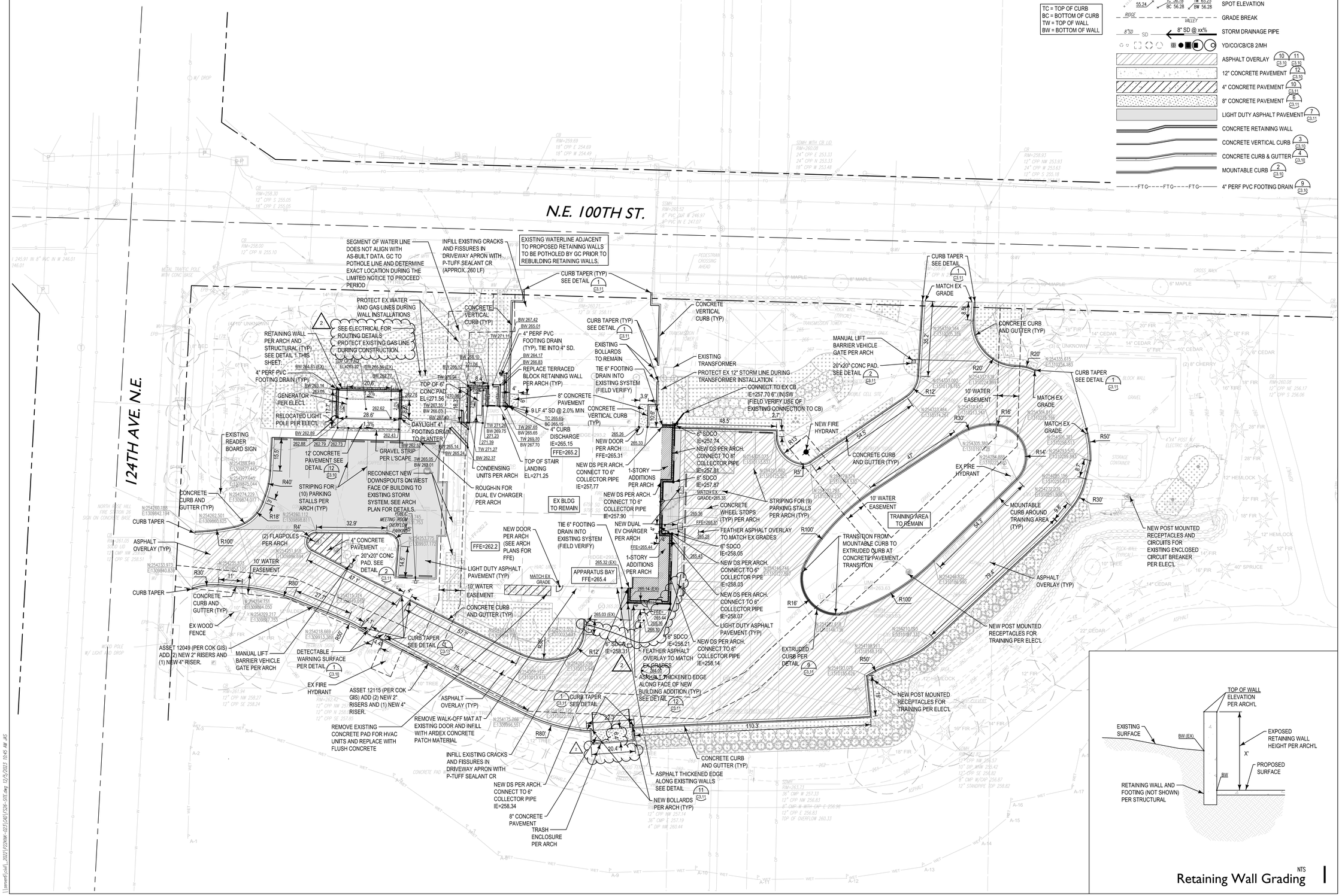

TCA
ARCHITECTURE + PLANNING + DESIGN
6211 ROOSEVELT WAY NORTHEAST
SEATTLE, WA 98115
tel: (206) 522-3830
fax: (206) 522-2456

COUGHLIN PORTER LUNDEEN
801 SECOND AVENUE, SUITE 900
SEATTLE, WA 98104
(206) 343-0460 www.cplinc.com

BID SET

No.	Description	Date:
2	ADDENDUM 2	12/7/23

Project Title:

FIRE STATION 26 RENOVATION

CITY OF KIRKLAND
9930 124TH AVE NE, KIRKLAND, WA

Sheet Title:

PAVING & GRADING

Scale: **As Noted**
Project No. : **C210211-07**
Date : **11/14/2023**

Sheet Number :

C3.00

Call Before You Dig. 8-1-1 or 1-800-424-5555 Underground Service (USA)

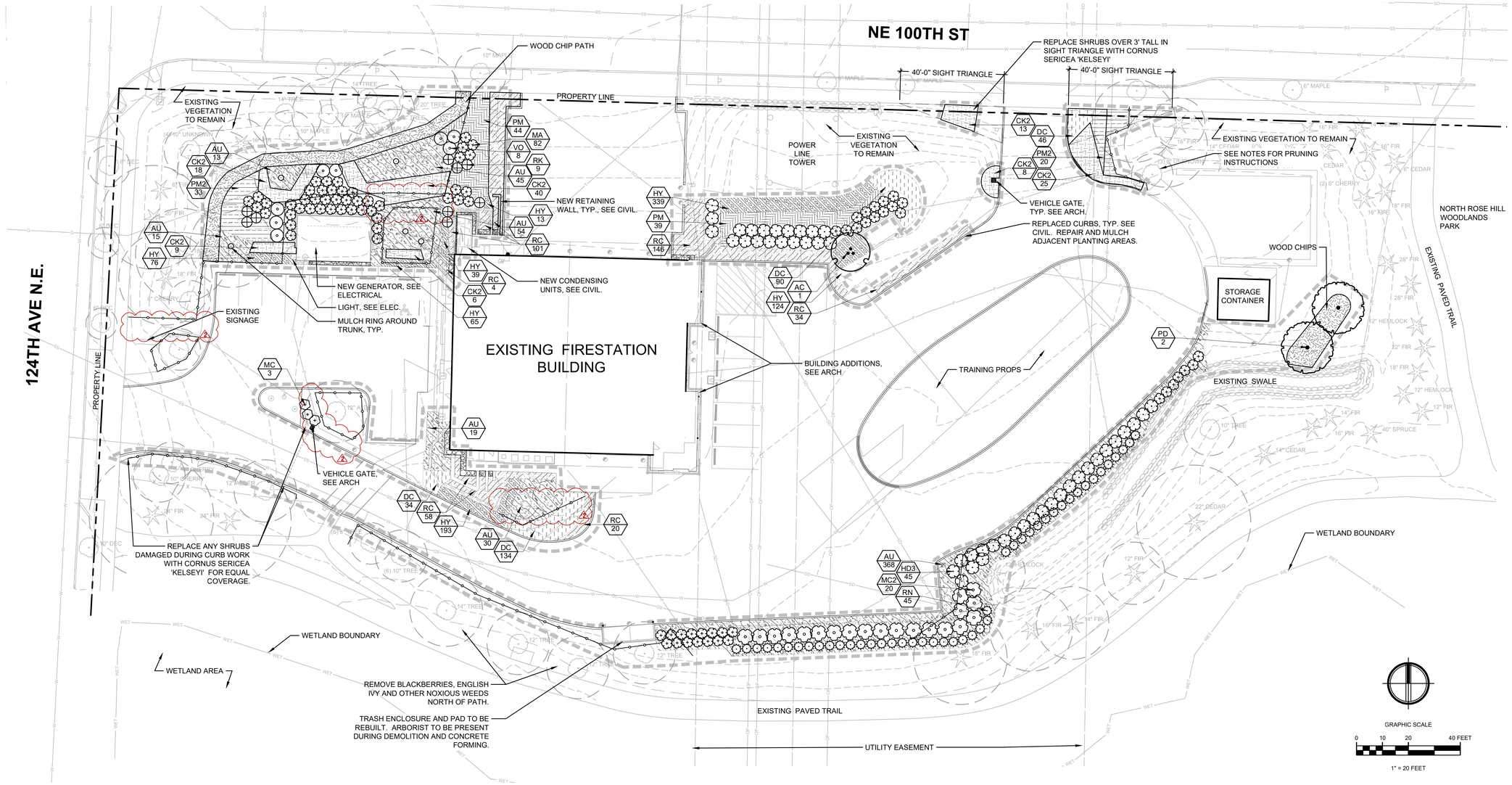

GENERAL LANDSCAPE NOTES

1. SEE L1.1 FOR PLANT DETAILS AND SCHEDULE.
2. SEE L2.0 FOR SOIL PLAN
3. SEE L3.0 FOR SCHEMATIC IRRIGATION DRAWINGS.
4. PLANTING SHALL CONFORM TO ALL CITY OF KIRKLAND CODE REQUIREMENTS, INCLUDING PRESERVATION OF ADEQUATE INTERSECTION SIGHT DISTANCE LINES/ TRIANGULAR AREAS.
5. CONTRACTOR SHALL VERIFY ON-SITE CONDITIONS PRIOR TO BIDDING AND CONSTRUCTION.
6. THE CONTRACTOR IS RESPONSIBLE FOR READING THE PLANS, SPECIFICATIONS AND NOTES.
7. FOR FENCES, GATES, AND SITE FURNISHING, SEE ARCH. FOR PAVING, SEE CIVIL.
8. CONTRACTOR TO REPAIR TO EXISTING CONDITION OR BETTER, ANY EXISTING PLANTING AND IRRIGATION TO REMAIN DAMAGED BY CONSTRUCTION AT NO COST TO THE OWNER.
9. REMOVE EXISTING SHRUBS AND GROUNDCOVERS WHERE NEW PLANTING IS SHOWN.
10. SEE CIVIL FOR TREE REMOVAL PLAN AND TREE PROTECTION FENCING. SEE ARBORIST REPORT FOR TREE RETENTION TABLE.
11. SEE TREE CONSERVATION PLAN FOR ADDITIONAL REQUIREMENTS.
12. TRIM TREES AS REQUIRED TO ACCOMMODATE CONSTRUCTION BEFORE BEGINING WORK. ALL TREE PRUNING TO BE PREFORMED BASED ON ARBORIST BEST PRACTICES AND UNDER SUPERVISION OF ARBORIST.

LEGEND

- LIMIT OF WORK
- PROPERTY LINE
- EXISTING WOOD FENCE
- TREE PROTECTION FENCING, SEE CIVIL
- GRAVEL MAINTENANCE PATH (6 / L1.1)
- 4" DEPTH MULCH
- EXISTING TREES
- CRITICAL ROOT ZONE (CRZ)

TCA
ARCHITECTURE + PLANNING + DESIGN
6211 ROOSEVELT WAY NORTHEAST
SEATTLE, WA 98115
tel: (206) 522-3830
fax: (206) 522-2456

AHBL
TACOMA · SEATTLE
SPOKANE · TRI-CITIES
2215 North 30th Street, Suite 300 Tacoma, WA 98403
253.383.2422 TEL 253.383.2572 FAX www.ahbl.com WEB

STATE OF WASHINGTON
CRAIG R. SKIPTON
NO. 1971 EXP. 03/09/2025
LANDSCAPE ARCHITECT
12/07/2023

BID SET

No.	Description	Date:
2.	Addendum 2	12/07/23

Project Title:

FIRE STATION 26 RENOVATION
CITY OF KIRKLAND
9930 124TH AVE NE KIRKLAND, WA 98033

Sheet Title:

PLANTING PLAN

Scale: **AS INDICATED**
Project No. : **2220427**
Date : **11/14/2023**

Sheet Number :

L1.0

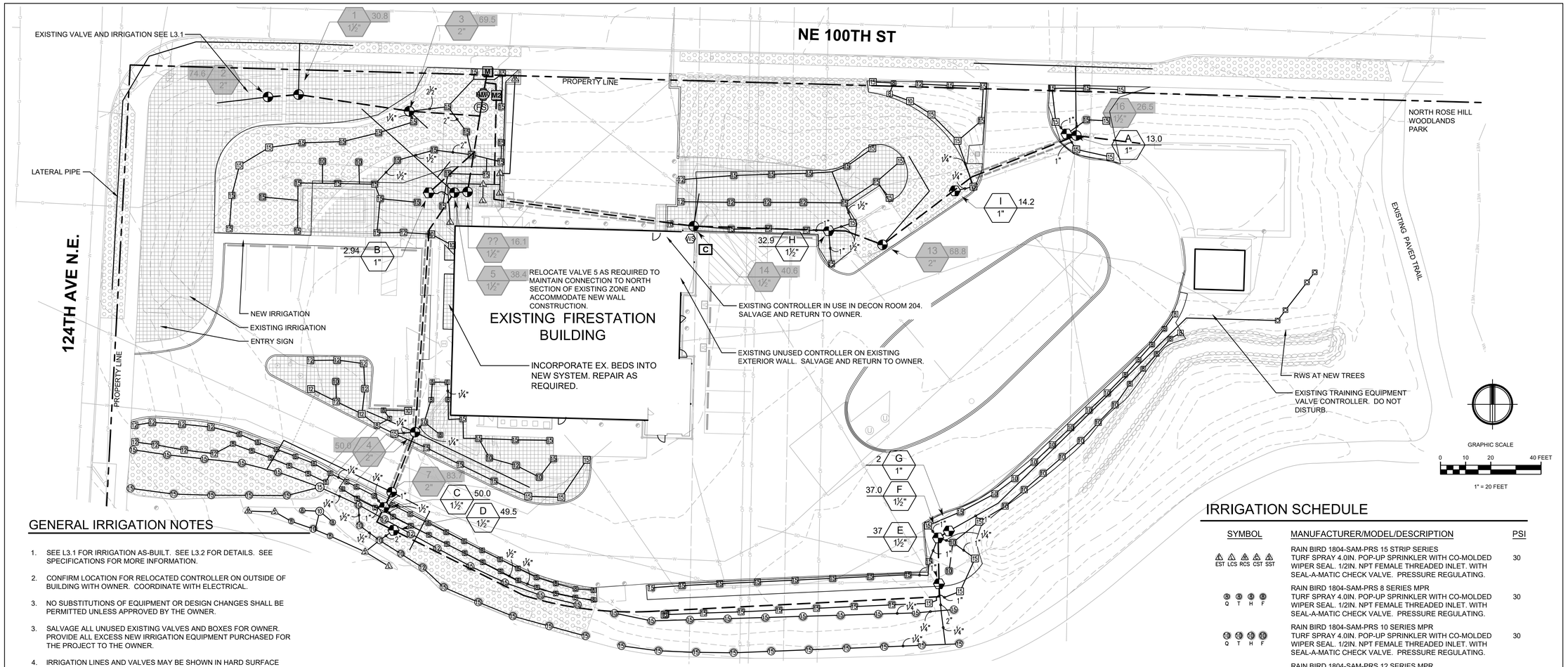

GENERAL IRRIGATION NOTES

1. SEE L3.1 FOR IRRIGATION AS-BUILT. SEE L3.2 FOR DETAILS. SEE SPECIFICATIONS FOR MORE INFORMATION.
2. CONFIRM LOCATION FOR RELOCATED CONTROLLER ON OUTSIDE OF BUILDING WITH OWNER. COORDINATE WITH ELECTRICAL.
3. NO SUBSTITUTIONS OF EQUIPMENT OR DESIGN CHANGES SHALL BE PERMITTED UNLESS APPROVED BY THE OWNER.
3. SALVAGE ALL UNUSED EXISTING VALVES AND BOXES FOR OWNER. PROVIDE ALL EXCESS NEW IRRIGATION EQUIPMENT PURCHASED FOR THE PROJECT TO THE OWNER.
4. IRRIGATION LINES AND VALVES MAY BE SHOWN IN HARD SURFACE AREAS OR OUTSIDE LANDSCAPE AREAS FOR GRAPHIC CLARITY. LOCATE ALL IRRIGATION LINES IN LANDSCAPE AREAS OR IN SLEEVES UNDER PAVEMENT.
5. IRRIGATION CONTRACTOR SHALL COORDINATE INSTALLATION OF IRRIGATION CONDUIT AND SLEEVES UNDER HARD SURFACES WITH RESPECTIVE CONTRACTORS, REUSING EXISTING WHERE POSSIBLE.
6. CONTRACTOR SHALL BE RESPONSIBLE FOR OBTAINING ALL PERMITS, TESTS, AND INSPECTIONS REQUIRED FOR THE IRRIGATION SYSTEM.
7. CALL FOR LOCATES PRIOR TO DIGGING AT 811. CONTRACTOR IS RESPONSIBLE TO VERIFY UTILITY LOCATIONS. IF UTILITIES ARE DAMAGED IN THE COURSE OF WORK, CONTRACTOR SHALL INFORM THE OWNER AND MAKE ANY REPAIRS REQUIRED, AT NO COST TO THE OWNER.
8. ALL SLEEVING SHALL BE MARKED, SEALED AND STAKED. ALL SLEEVES SHALL BE TWICE THE SIZE OF OF THE LINE OR COMBINED LINES. MINIMUM SLEEVE SIZE SHALL BE 4-INCHES IF LOCATED UNDER ROADWAY OR DRIVE AISLE.
9. COORDINATE SLEEVING LOCATIONS WITH ELECTRICAL CONDUIT.
10. SPLICE CONTROL WIRES WITHIN VALVE BOXES ONLY, USING 3M-DBY, OR APPROVED SPLICE KITS, AND PROVIDE A 24" EXPANSION LOOP FOR ALL CONTROL WIRES WITHIN EACH VALVE BOX. KEEP WIRE SPLICES TO A MINIMUM. PROVIDE CLEAN WIRE CUTS WITH NEW SPLICE KITS AT ALL SPLICES INCLUDING ANY SPLICE THAT IS DISCONNECTED AND RECONNECTED FOR ANY REASON OR PERIOD OF TIME.
11. VALVE BOXES SHALL BE COMMERCIAL-GRADE POLYETHYLENE OR HDPE AND SUITABLE FOR LIGHT DUTY APPLICATIONS, COLOR: TAN OR BLACK IN MULCH AREAS AND GREEN IN LAWN AREAS.
12. CONTRACTOR SHALL HAND TRENCH IRRIGATION DITCHES WHEN WITHIN 20 FEET, OR WITHIN A DELINEATED ROOT PROTECTION ZONE, OF EXISTING TREES TO REMAIN. AVOID CUTTING ANY ROOTS OVER 3" - 4" IN DIAMETER WITHIN THE ROOT PROTECTION ZONE.
13. INSTALLER SHALL BE RESPONSIBLE FOR KEEPING EXACT ACCURATE NOTES AND "AS-BUILTS" FOR THE CREATION OF THE "RECORD DRAWINGS" OF THE INSTALLED SYSTEM.
14. CONTRACTOR SHALL PROVIDE IRRIGATION MAINTENANCE THROUGH THE PLANT ESTABLISHMENT PERIOD INCLUDING WINTERIZATION(S) AND SPRING START-UP(S).
15. CONTRACTOR SHALL SCHEDULE WALK-THRUS WITH CITY MAINTENANCE REPRESENTATIVE AFTER IRRIGATION IS INSTALLED AND TWO WEEKS BEFORE MAINTENANCE PERIOD ENDS.

NEW VALVE SCHEDULE

NUMBER	MODEL	SIZE	TYPE	GPM	PRECIP
A	NEW RAIN BIRD PEB	1"	SHRUB SPRAY	12.99	1.57 in/h
B	NEW RAIN BIRD PEB	1"	SHRUB SPRAY	2.94	1.16 in/h
C	NEW RAIN BIRD PEB	1-1/2"	SHRUB SPRAY	49.97	1.43 in/h
D	NEW RAIN BIRD PEB	1-1/2"	TURF SPRAY	49.47	1.38 in/h
E	NEW RAIN BIRD PEB	1-1/2"	TURF SPRAY	37	1.33 in/h
F	NEW RAIN BIRD PEB	1-1/2"	SHRUB SPRAY	37.02	1.48 in/h
G	NEW RAIN BIRD PEB	1"	BUBBLER	2	1.76 in/h
H	NEW RAIN BIRD PEB	1-1/2"	SHRUB SPRAY	32.88	1.46 in/h
I	NEW RAIN BIRD PEB	1"	SHRUB SPRAY	14.16	1.51 in/h

EXISTING VALVE SCHEDULE

NUMBER	MODEL	SIZE	TYPE	GPM	PRECIP
1	EXISTING REMOTE CONTROL VALVE	1-1/2"	TURF SPRAY - EXISTING	30.76	1.9 in/h
2	EXISTING REMOTE CONTROL VALVE	2"	SHRUB SPRAY - EXISTING	74.57	1.9 in/h
3	EXISTING REMOTE CONTROL VALVE	2"	TURF SPRAY - EXISTING	69.47	1.9 in/h
4	EXISTING REMOTE CONTROL VALVE	2"	SHRUB SPRAY - EXISTING	49.98	1.9 in/h
5	EXISTING REMOTE CONTROL VALVE	1-1/2"	SHRUB SPRAY - EXISTING	38.44	1.9 in/h
7	EXISTING REMOTE CONTROL VALVE	2"	TURF SPRAY - EXISTING	83.68	1.9 in/h
13	EXISTING REMOTE CONTROL VALVE	2"	TURF SPRAY - EXISTING	68.81	1.9 in/h
14	EXISTING REMOTE CONTROL VALVE	1-1/2"	SHRUB SPRAY - EXISTING	40.57	1.9 in/h
16	EXISTING REMOTE CONTROL VALVE	1-1/2"	TURF SPRAY - EXISTING	26.47	1.9 in/h
??	EXISTING REMOTE CONTROL VALVE	1-1/2"	SHRUB SPRAY - EXISTING	16.06	1.9 in/h

SYMBOL	MANUFACTURER/MODEL/DESCRIPTION
	NEW HUNTER ICV-G 1IN., 1-1/2IN., 2IN., AND 3IN. PLASTIC ELECTRIC REMOTE CONTROL VALVES, GLOBE CONFIGURATION, WITH NPT THREADED INLET/OUTLET, FOR COMMERCIAL/MUNICIPAL USE.
KMV	NEW HUNTER IBV 1-1/2" 1IN., 1-1/2IN., 2IN., AND 3IN. BRASS ELECTRIC MASTER VALVE, GLOBE CONFIGURATION, WITH NPT THREADED INLET/OUTLET, FOR COMMERCIAL/MUNICIPAL USE. 2.
C	NEW WEATHERMATIC AND NEW SL4824-1YR-BDL-FLOW-M1NA SMARTLINE 24-ZONE CONTROLLER, INTERNAL 120VAC/230VAC TRANSFORMER, LARGE BACKLIT LCD DISPLAY, WITH NEW CELLULAR MODULE FOR FLOW STATION AND 1 YEAR OF SERVICE AND WEATHER STATION IN METAL CABINET.
WS	NEW WEATHERMATIC SLW5 WIRELESS WEATHER SENSOR FOR ET BASED WATERING, 900MHZ - 1500FT. LINE OF SITE RANGE
FS	NEW WEATHERMATIC SLFSI-T15 2" 1.5IN. TEE TYPE INSERT FLOW SENSOR USED WITH THE SMARTLINK FLOW AIRCARD. 2.
	IRRIGATION LATERAL LINE: PVC SCHEDULE 40
	IRRIGATION MAINLINE: PVC SCHEDULE 40
	PIPE SLEEVE: PVC SCHEDULE 40

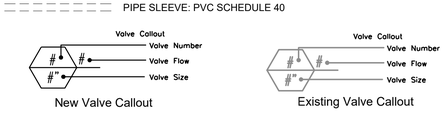

SHRUB SPRAY - EXISTING

TURF SPRAY - EXISTING

IRRIGATION SCHEDULE

SYMBOL	MANUFACTURER/MODEL/DESCRIPTION	PSI
EST LCS RCS CST SST	RAIN BIRD 1804-SAM-PRS 15 STRIP SERIES TURF SPRAY 4.0IN. POP-UP SPRINKLER WITH CO-MOLDED WIPER SEAL. 1/2IN. NPT FEMALE THREADED INLET. WITH SEAL-A-MATIC CHECK VALVE. PRESSURE REGULATING.	30
Q T H F	RAIN BIRD 1804-SAM-PRS 8 SERIES MPR TURF SPRAY 4.0IN. POP-UP SPRINKLER WITH CO-MOLDED WIPER SEAL. 1/2IN. NPT FEMALE THREADED INLET. WITH SEAL-A-MATIC CHECK VALVE. PRESSURE REGULATING.	30
Q T H F	RAIN BIRD 1804-SAM-PRS 10 SERIES MPR TURF SPRAY 4.0IN. POP-UP SPRINKLER WITH CO-MOLDED WIPER SEAL. 1/2IN. NPT FEMALE THREADED INLET. WITH SEAL-A-MATIC CHECK VALVE. PRESSURE REGULATING.	30
Q T H TQ F	RAIN BIRD 1804-SAM-PRS 12 SERIES MPR TURF SPRAY 4.0IN. POP-UP SPRINKLER WITH CO-MOLDED WIPER SEAL. 1/2IN. NPT FEMALE THREADED INLET. WITH SEAL-A-MATIC CHECK VALVE. PRESSURE REGULATING.	30
Q T H TQ F	RAIN BIRD 1804-SAM-PRS 15 SERIES MPR TURF SPRAY 4.0IN. POP-UP SPRINKLER WITH CO-MOLDED WIPER SEAL. 1/2IN. NPT FEMALE THREADED INLET. WITH SEAL-A-MATIC CHECK VALVE. PRESSURE REGULATING.	30
4 6 8 10 12 15 18	RAIN BIRD 1804-SAM-PRS ADJ TURF SPRAY 4.0IN. POP-UP SPRINKLER WITH CO-MOLDED WIPER SEAL. 1/2IN. NPT FEMALE THREADED INLET. WITH SEAL-A-MATIC CHECK VALVE. PRESSURE REGULATING.	30
EST LCS RCS CST SST	RAIN BIRD 1812-SAM-PRS 15 STRIP SERIES SHRUB SPRAY 12IN. POP-UP SPRINKLER WITH CO-MOLDED WIPER SEAL. 1/2IN. NPT FEMALE THREADED INLET. WITH SEAL-A-MATIC CHECK VALVE, AND PRESSURE REGULATING DEVICE.	30
Q H F	RAIN BIRD 1812-SAM-PRS 5 SERIES MPR SHRUB SPRAY 12IN. POP-UP SPRINKLER WITH CO-MOLDED WIPER SEAL. 1/2IN. NPT FEMALE THREADED INLET. WITH SEAL-A-MATIC CHECK VALVE, AND PRESSURE REGULATING DEVICE.	30
Q T H F	RAIN BIRD 1812-SAM-PRS 8 SERIES MPR SHRUB SPRAY 12IN. POP-UP SPRINKLER WITH CO-MOLDED WIPER SEAL. 1/2IN. NPT FEMALE THREADED INLET. WITH SEAL-A-MATIC CHECK VALVE, AND PRESSURE REGULATING DEVICE.	30
Q T H F	RAIN BIRD 1812-SAM-PRS 10 SERIES MPR SHRUB SPRAY 12IN. POP-UP SPRINKLER WITH CO-MOLDED WIPER SEAL. 1/2IN. NPT FEMALE THREADED INLET. WITH SEAL-A-MATIC CHECK VALVE, AND PRESSURE REGULATING DEVICE.	30
Q T H TQ F	RAIN BIRD 1812-SAM-PRS 12 SERIES MPR SHRUB SPRAY 12IN. POP-UP SPRINKLER WITH CO-MOLDED WIPER SEAL. 1/2IN. NPT FEMALE THREADED INLET. WITH SEAL-A-MATIC CHECK VALVE, AND PRESSURE REGULATING DEVICE.	30
Q T H TQ F	RAIN BIRD 1812-SAM-PRS 15 SERIES MPR SHRUB SPRAY 12IN. POP-UP SPRINKLER WITH CO-MOLDED WIPER SEAL. 1/2IN. NPT FEMALE THREADED INLET. WITH SEAL-A-MATIC CHECK VALVE, AND PRESSURE REGULATING DEVICE.	30
4 6 8 10 12 15 18	RAIN BIRD 1812-SAM-PRS ADJ SHRUB SPRAY 12IN. POP-UP SPRINKLER WITH CO-MOLDED WIPER SEAL. 1/2IN. NPT FEMALE THREADED INLET. WITH SEAL-A-MATIC CHECK VALVE, AND PRESSURE REGULATING DEVICE.	30
1401 1402 1404 1408	RAIN BIRD RWS-B-C 1400 SERIES ROOT WATERING SYSTEM WITH 4.0IN. DIAMETER X 36.0IN. LONG WITH LOCKING GRATE, SEMI-RIGID MESH TUBE, AND CHECK VALVE. RAIN BIRD BUBBLER OPTION AS INDICATED: 1401 0.25 GPM, 1402 0.5 GPM, 1404 1.0 GPM, 1408 2.0 GPM.	30

TCA
ARCHITECTURE + PLANNING + DESIGN
6211 ROOSEVELT WAY NORTHEAST
SEATTLE, WA 98115
tel: (206) 522-3830
fax: (206) 522-2456

AHBL
TACOMA · SEATTLE
SPOKANE · TRI-CITIES
2215 North 30th Street, Suite 300 Tacoma, WA 98403
253.383.2422 TEL 253.383.2572 FAX www.ahbl.com WEB

STATE OF WASHINGTON
CRAIG R. SKIPTON
NO. 1471 EXP. 03/09/2025
LANDSCAPE ARCHITECT
12/07/2023

BID SET

No.	Description	Date:
2	Addendum 2	12/07/23

Project Title:

FIRE STATION 26 RENOVATION

CITY OF KIRKLAND
9930 124TH AVE NE KIRKLAND, WA 98033

Sheet Title:

IRRIGATION PLAN

Scale: **AS INDICATED**

Project No. : **2220427**

Date : **11/14/2023**

Sheet Number :

L3.0

LEGEND

- NEW ASPHALT PAVING
- NEW CONCRETE PAVING
- NEW GRAVEL
- EXISTING ASPHALT PAVING
- EXISTING CONCRETE PAVING
- BUILDING ADDITION
- EXISTING STRUCTURE
- WETLAND
- LANDSCAPING

SITE PLAN GENERAL NOTES

1. REFER TO SHEET C3.00 FOR GRADING AND SITE UTILITIES
2. REFER TO IRRIGATION PLANS FOR LOCATION OF IRRIGATION LINES AND HEADS.
3. REFER TO LANDSCAPE PLAN FOR LANDSCAPE NOTES, LAYOUT AND PLANTINGS.
4. SEE ELECTRICAL DRAWINGS FOR SITE LIGHTING AND ELECTRICAL REQUIREMENTS.
5. WHERE UTILITIES/PIPES CROSS BUILDING FOOTING, SEE DETAIL 18/S3.1 AND PROVIDE SLEEVE FOR PIPE AND CONDUIT.
6. WHERE UTILITIES PENETRATE VAPOR BARRIER, SEAL V.B. PER 14/A4.1.
7. PROVIDE 6" THICK CONC. SLAB REINFORCED WITH W1/4 W.W.F. AT ALL EXTERIOR MECHANICAL SLABS U.O.N. VERIFY ALL CONC. MECHANICAL PAD LOCATIONS AND DIMENSIONS W/ MECHANICAL PLANS AND EQUIPMENT. PROVIDE CONCRETE WATERPROOFING SEALER.
8. REFER TO 9 AND 10/S3.2 FOR GENERATOR SLAB CONSTRUCTION. PROVIDE CONCRETE WATERPROOFING SEALER.
9. REPLACE AND REPAIR ANY EXISTING LANDSCAPING, CONCRETE AND IRRIGATION NOTED TO REMAIN THAT IS DAMAGED DURING CONSTRUCTION.
10. ADA PARKING SIGNAGE, STRIPING AND SYMBOLS OF ACCESSIBILITY SHALL COMPLY WITH WAC AND ANSI A117.1 2009:
    A. PROVIDE PAINTED PARKING STALL STRIPING & SYMBOLS OF ACCESSIBILITY PER 9/A1.2.
    B. PROVIDE STANDARD ADA PARKING STRIPING PER 10/A1.2 EXISTING ADA PARKING SIGNAGE TO REMAIN.
11. ALL EXISTING SITE WALLS TO BE CLEANED OF ALL DIRT, DEBRIS & MOSS. PRESSURE WASH SITE WALLS AS REQUIRED.
12. EXISTING LIGHT POLES AND CONCRETE BASES TO BE CLEANED OF ALL DIRT, DEBRIS AND MOSS.
13. EXISTING OIL WATER SEPARATOR TO BE CLEANED. CLEAN EXISTING DRAIN LINES FROM EXISTING APPARATUS BAY TO EXISTING OIL WATER SEPARATOR. REFER TO PLUMBING.
14. ALL EXISTING GUARDRAILS AND BOLLARDS TO BE CLEANED, PREPPED AND REPAINTED, TYP.
15. ALL EXISTING CONEX BOXES TO BE CLEANED OF ALL DIRT AND DEBRIS.
16. PROVIDE TIGHTLINE AS REQUIRED BY CIVIL TO COLLECT DOWNSPOUTS TO BE ROUTED TO STORMWATER COLLECTION SYSTEMS.

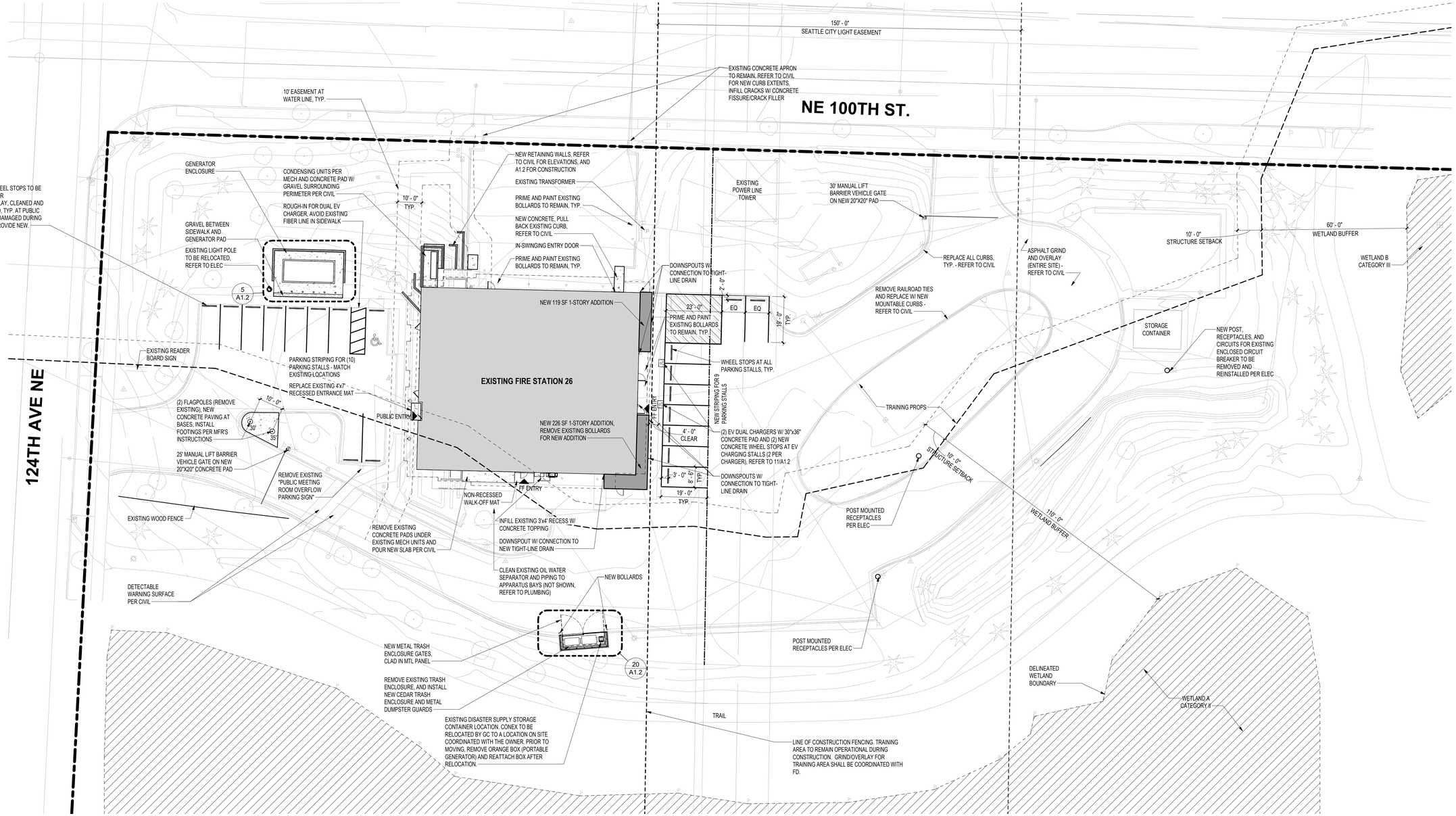

1 **SITE PLAN**
Scale: 1" = 20'-0"

TCA
ARCHITECTURE + PLANNING + DESIGN
6211 ROOSEVELT WAY NORTHEAST
SEATTLE, WA 98115
tel: (206) 522-3830
fax: (206) 522-2456

6235 REGISTERED ARCHITECT
BRIAN J. HARRIS
STATE OF WASHINGTON
11/14/2023
EXPIRES: 03/03/2024

BID SET

No.	Description	Date:
3	PERMIT REVISIONS (1)	09/13/23
2	ADDENDUM 2	12/07/23
4	PERMIT REVISIONS (2)	Date 2

Project Title:
FIRE STATION 26 RENOVATION
CITY OF KIRKLAND
9930 124TH AVE NE KIRKLAND, WA 98033

Sheet Title:
SITE PLAN

Scale: As indicated
Project No. : 22-27-26
Date : 11/14/2023

Sheet Number :
A1.1

Autodesk Docs://22-27-26 Kirkland FS 26/22-27-26_Kirkland FS26_Arch_R23_BID.rvt

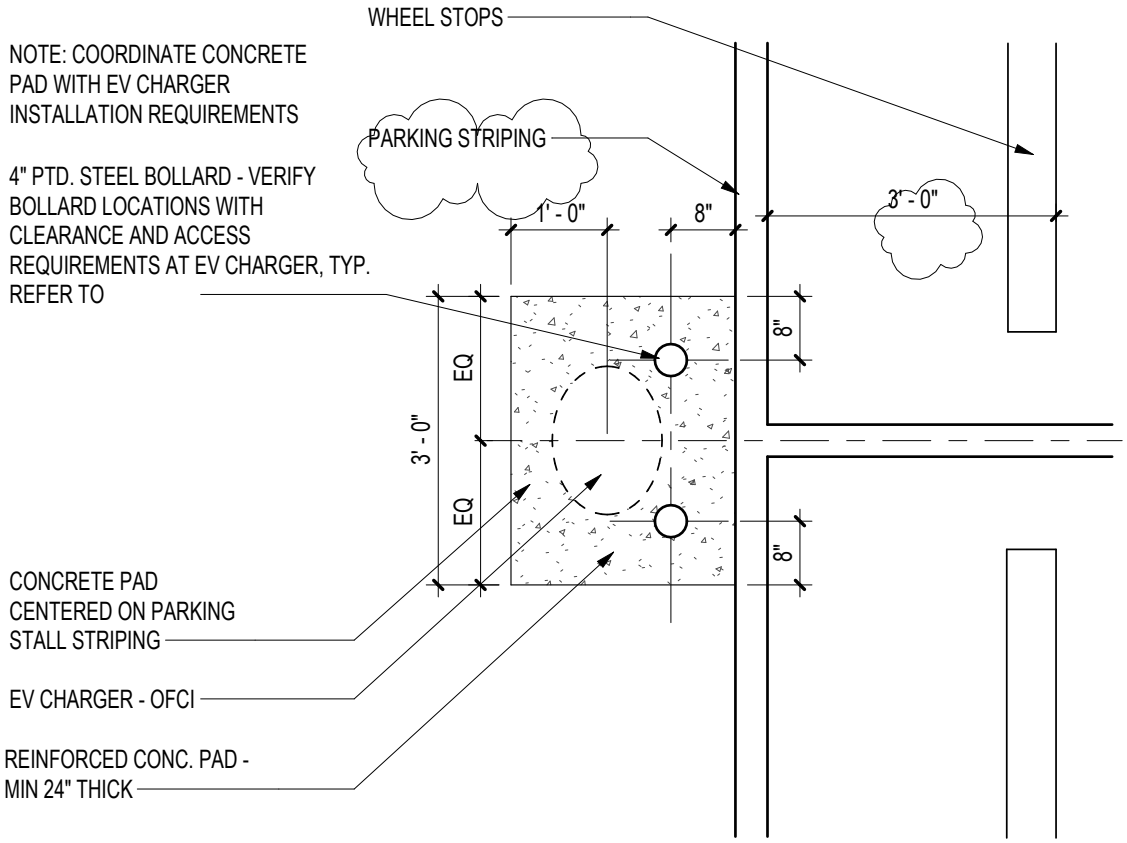

TCA
ARCHITECTURE + PLANNING + DESIGN
6211 ROOSEVELT WAY NE
SEATTLE, WA 98115
tel: (206) 522-3830

EV CHARGER

FIRE STATION 26 RENOVATION

SCALE:	1/2" = 1'-0"
DATE:	12/06/23
PROJECT NO:	22-27-26
REFERENCE NUMBER:	AD 2 ASK-1
REFERENCE SHEET:	11/A1.2

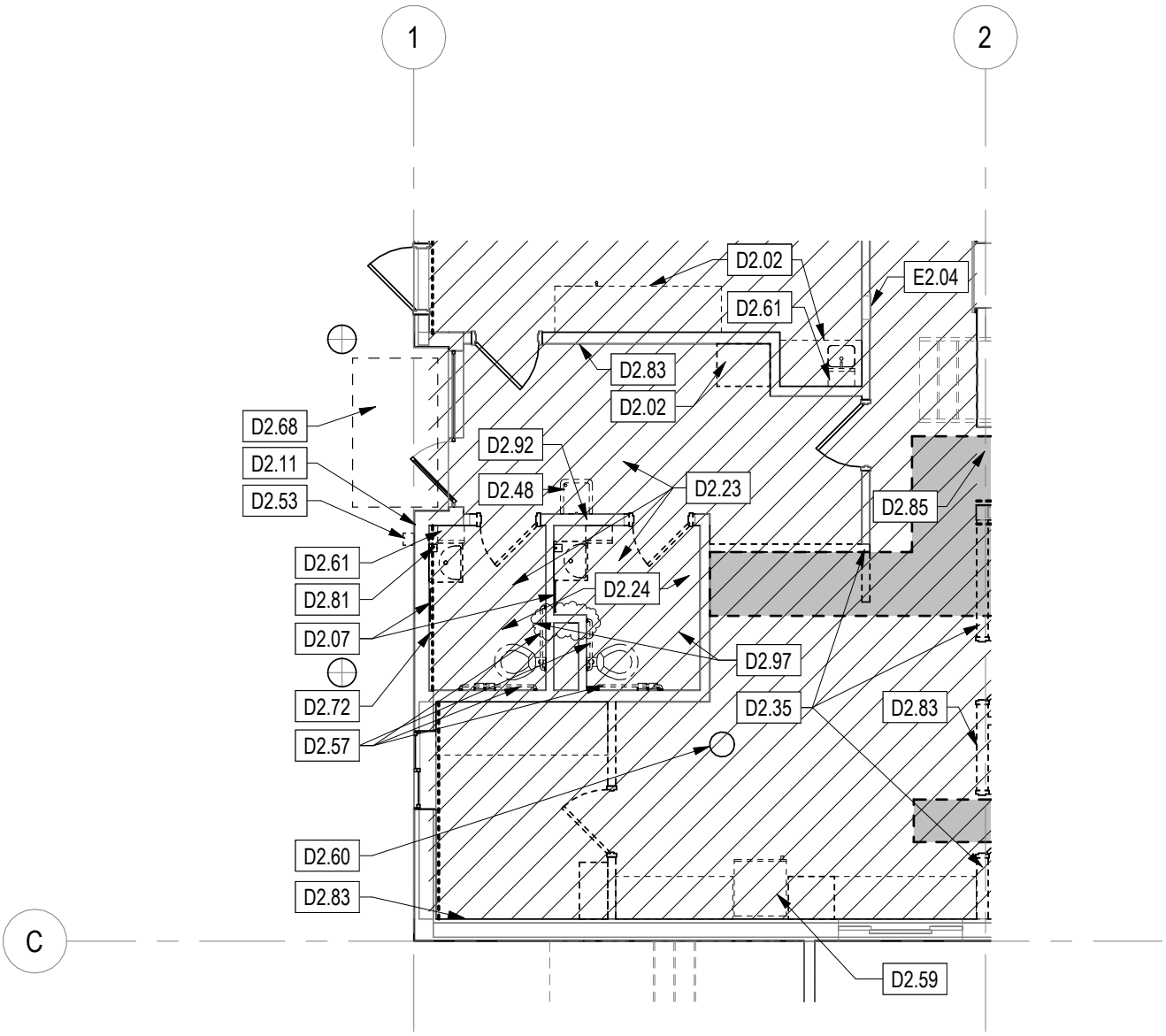

0 4' 8' 16'

1/8" = 1'

TCA

ARCHITECTURE + PLANNING + DESIGN

6211 ROOSEVELT WAY NE
SEATTLE, WA 98115
tel: (206) 522-3830

DEMO PLAN LEVELS 1 & 2

FIRE STATION 26 RENOVATION

SCALE:	1/8" = 1'-0"
DATE:	12/06/23
PROJECT NO:	22-27-26
REFERENCE NUMBER:	AD 2 ASK-2
REFERENCE SHEET:	1/A2.1

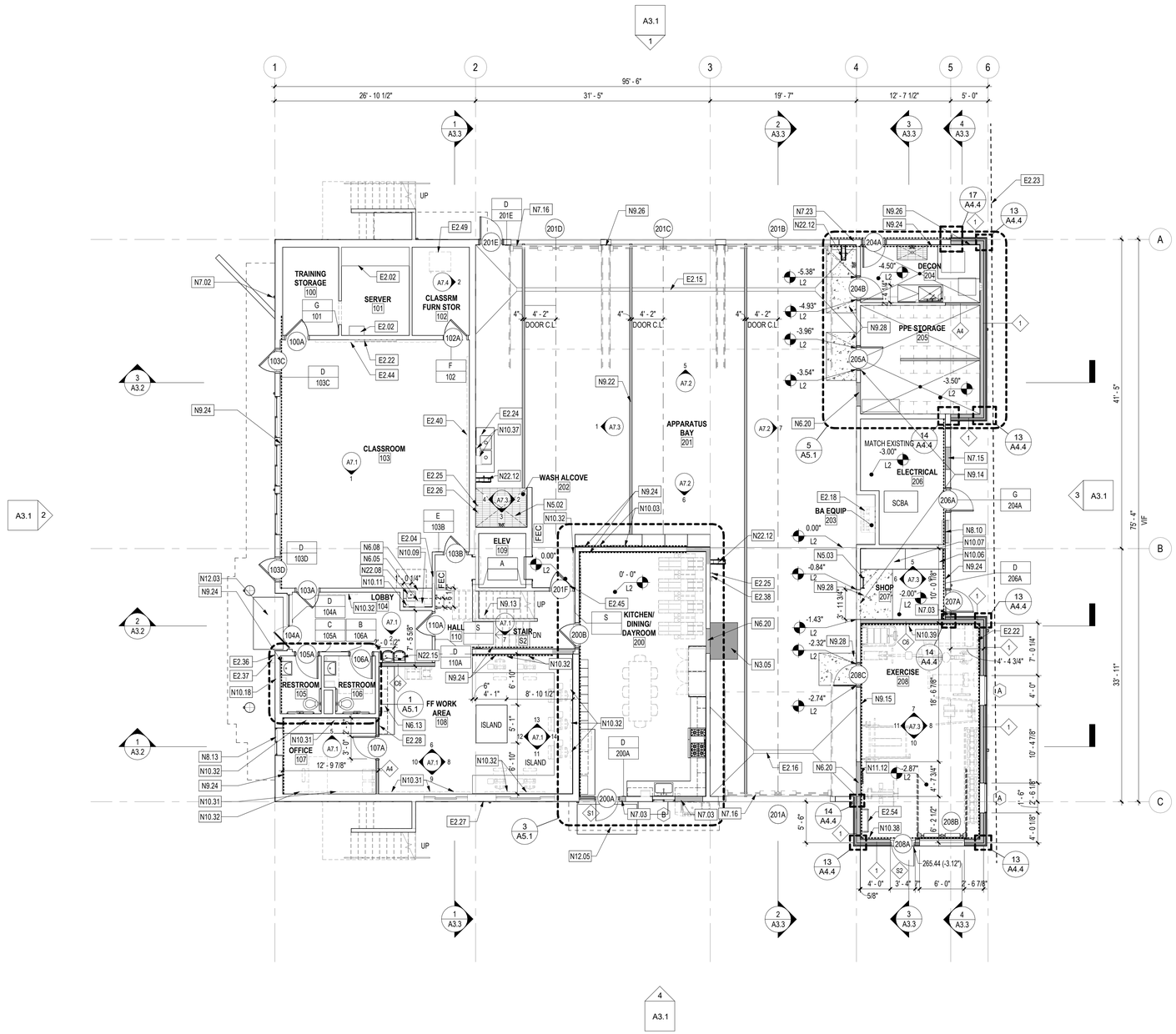

1 FLOOR PLAN - LEVELS 1 & 2

Scale: 1/8" = 1'-0"

KEYNOTE LEGEND

E2.02	EXISTING CASEWORK TO REMAIN
E2.04	EXISTING FIRE EXTINGUISHER CABINET TO REMAIN, TYP.
E2.15	EXISTING TRENCH DRAIN TO REMAIN, TYP.
E2.16	EXISTING CONTROL JOINT TO REMAIN, TYP.
E2.18	EXISTING SCBA EQUIPMENT - REINSTALLED IN SAME LOCATION
E2.22	EXISTING TV - REINSTALLED IN SAME LOCATION
E2.23	DASHED LINE INDICATES EXTENTS OF EXISTING CITY LIGHT EASEMENT
E2.24	EXISTING DECON SINK - REINSTALLED IN SAME LOCATION
E2.25	EXISTING HOSE BIBB TO REMAIN
E2.26	EXISTING SOAP PORTIONER - REINSTALLED IN SAME LOCATION
E2.27	HAM RADIO CONNECTION. PROVIDE NEW FACEPLATE AFTER CONNECTION IS RELOCATED - REFER TO ELECTRICAL
E2.28	800 MHZ CONNECTION - REFER TO ELECTRICAL
E2.36	EXISTING DOORBELL - REINSTALLED IN SAME LOCATION
E2.37	EXISTING PHONE BOX - REINSTALLED IN SAME LOCATION
E2.38	EXISTING TRUCK FILL TO REMAIN,
E2.40	EXISTING WHITEBOARDS - REINSTALLED IN SAME LOCATION
E2.44	EXISTING WHITEBOARD AND SLIDING TRACKS - REINSTALLED IN SAME LOCATION
E2.45	EXISTING DOOR, FRAME AND/OR THRESHOLD - REINSTALLED IN SAME LOCATION
E2.49	EXISTING REFRIGERATOR AND FREEZER - REINSTALLED IN SAME LOCATION
E2.54	EXISTING PULL-UP BAR - REINSTALLED AT INDICATED LOCATION
N3.05	GRIND EXISTING CONCRETE TRANSITION AT INFILLED DOOR OPENING TO BE LEVEL W/ ADJACENT CONCRETE
N5.02	FLOOR GRATE O/ 4" DEPRESSED SLAB, TYP.
N5.03	METAL LADDER FOR ATTIC ACCESS
N6.05	P-LAM UPPER CABINET W/ 20" DEEP MICROWAVE SHELF, 3" LIGHT VALANCE, TYP.
N6.08	SOLID SURFACE COUNTERTOP W/ 4" BACKSPLASH
N6.13	P-LAM OPEN SHELVES, 3" LIGHT VALANCE, TYP.
N6.20	WALL INFILL AT DEMOLISHED DOOR; MATCH ADJACENT CONSTRUCTION & ALIGN FINISHES.
N7.02	REPLACE EXISTING DOWNSPOUT WITH NEW PRE-FINISHED MTL DOWNSPOUT, TYP. AT ALL LOCATIONS UON (MATCH EXISTING)
N7.03	WALL INFILL AT DEMOLISHED OPENING; MATCH ADJACENT EXISTING WALL CONSTRUCTION AND FINISHES, TYP. TIE NEW WRB INTO EXISTING BUILDING PAPER.
N7.15	WALL INFILL AT DEMOLISHED LOUVER; MATCH ADJACENT CONSTRUCTION & ALIGN FINISHES. TIE NEW WRB INTO EXISTING BUILDING PAPER.
N7.16	REPLACE WEATHERSEALS AT ALL EXISTING OVERHEAD SECTIONAL DOORS, TYP.
N7.23	SIDING TO BE REPLACED AT AREAS OF WALL STRENGTHENING; REFER TO STRUCTURAL. MATCH EXISTING WALL CONSTRUCTION AND JOINT PATTERN. TIE NEW WRB IN TO EXISTING BUILDING PAPER.
N8.10	PRE-FINISHED CUSTOM COLOR LOUVER, TYP. - REFER TO MECHANICAL
N8.13	PROVIDE WINDOW SCREENS AT ALL EXISTING WINDOWS, TYP.
N9.13	PROVIDE RUBBER TREADS, RISERS AND STRINGERS AT ALL FLIGHTS OF EXISTING STAIR
N9.14	PATCH AND REPAIR FINISHES AFTER SLAB INSTALLATION
N9.15	PROVIDE WALL FINISH LAYER PER FINISH SCHEDULE. DASHED LINE INDICATES EXTENTS
N9.22	POLYASPARTIC COATING, TYP.
N9.24	PROVIDE WALL FINISH LAYER PER FINISH SCHEDULE OR TO MATCH ADJACENT WALL CONSTRUCTION AT AREAS OF WALL STRENGTHENING. FINISHES TO ALIGN WITH ADJACENT WALL CONSTRUCTION. DASHED LINE INDICATES EXTENTS - REFER TO STRUCTURAL FOR SHEATHING AND ADDITIONAL REQUIREMENTS.
N9.26	PROVIDE ADDITIONAL GWB WALL FINISH LAYER ALONG REMAINING EXTENT OF WALL TO ALIGN FINISHES WITH ADJACENT WALL CONSTRUCTION WHERE STRUCTURAL STRENGTHENING OCCURS
N9.28	DECORATIVE CONCRETE OVERLAYMENT AT OPENINGS AS NEEDED TO TRANSITION DIFFERENCE IN SLAB ELEVATIONS; SLOPE TO BE NO MORE THAN 2% PER ANSI 117.1-2009. EXTENTS SHOWN ARE APPROXIMATE, FIELD VERIFY ALL NEW AND EXISTING SLOPES.
N10.03	TV - OFCI, W/ TILT SWIVEL WALL MOUNT - OFCI; CONTRACTOR TO PROVIDE BLOCKING AT LOCATIONS COORDINATED W/ OWNER
N10.06	60"x30" ADJUSTABLE HEIGHT WORKBENCH W/ SQUARE TUBE LEG AND MAPLE BUTCHER BLOCK TOP
N10.07	72"x30" ADJUSTABLE HEIGHT WORKBENCH W/ SQUARE TUBE LEG AND MAPLE BUTCHER BLOCK TOP
N10.09	SURFACE MOUNT HANDS-FREE PAPER TOWEL DISPENSER - OFCI, TYP.
N10.11	SOAP DISPENSER - OFCI, TYP.
N10.18	PIN-MOUNTED SIGNAGE
N10.31	48"x36" WALL MOUNTED WHITEBOARD, TYP. - OFCI; CONFIRM LOCATION PRIOR TO INSTALL
N10.32	48"x36" WALL MOUNTED TACKBOARD, TYP. - OFCI; CONFIRM LOCATION PRIOR TO INSTALL
N10.37	SOAP AND PAPER TOWEL DISPENSERS - OFCI; INSTALL IN SAME LOCATIONS AS REMOVED DISPENSERS
N10.38	36"X48" WALL MOUNTED WHITEBOARD - OFCI; CONFIRM LOCATION PRIOR TO INSTALL
N10.39	36"X48" WALL MOUNTED TACKBOARD - OFCI; CONFIRM LOCATION PRIOR TO INSTALL
N11.12	BARBELL HANGER - OFCI; CONFIRM LOCATION PRIOR TO INSTALL
N12.03	RECESSED 4'X7' WALK OFF MAT - REFER TO FINISH SCHEDULE
N12.05	EXTERIOR WALK OFF MAT - REFER TO FINISH SCHEDULE
N22.08	SINK - REFER TO PLUMBING
N22.12	HOSE REEL - REFER TO PLUMBING
N22.15	HIGH/LOW DRINKING FOUNTAIN WITH BOTTLE FILLER - REFER TO PLUMBING

FLOOR PLAN GENERAL NOTES

1. SEE INTERIOR ELEV. FOR GROMMETS IN CASEWORK.
2. PROVIDE DEPRESSED SLAB AT WASH ALCOVE AND SHOWERS TYP. (SEE STRUCT. FOUNDATION PLAN S2.1 FOR SLAB THICKNESS).
3. PROVIDE WALL TO WALL SLOPED FLOORS AT TRENCH DRAINS AT APPARATUS BAYS. MATCH EXISTING SLOPES.
4. AT DECON AND CLEANING, MAINTAIN FLOOR LEVEL AT WALLS AND PITCH SURFACES UNIFORMLY TO DRAINS.
5. FLOORS OTHER THAN AT APPARATUS BAY, DECON, AND CLEANING WITH A FLOOR DRAIN SHALL HAVE A 1% MIN. SLOPE TO DRAIN STARTING 18" FROM CENTER OF DRAIN.
6. COORDINATE AND PROVIDE BACKING AND BLK'G REQ'D FOR CABINETS, GRAB BARS, HANDRAILS, SHELVING AND OTHER EQUIPMENT AND HARDWARE PRIOR TO INSTALLING G.W.B. - CONT. X 6" 16 GA. FLAT STRAP W/ 2X6 MIN WOOD BLK'G REQUIRED AT ALL GRAB BARS AND HANDRAIL LOCATIONS. CONT. X 8" 16 GA. FLAT STRAP BACKING OK AT ALL OTHER LOCATIONS.
7. PROVIDE BLOCKING AS REQUIRED FOR WALL MOUNTED WHITEBOARDS AND TACKBOARDS. AT WALLS WHERE EXISTING FINISHES ARE REMAINING, PROVIDE APPROPRIATE ANCHORS TO MOUNT INTO EXISTING WALL.
8. WHERE CONTROL JOINTS TERMINATE AT AN INTERSECTING JOINT, HOLD SHORT AND FINISH WITH HAND SAW. OVERLAPPING SAW CUTS ARE NOT ALLOWED.
9. ALL GRIDLINES ARE ALIGNED TO FACE OF FINISH OF EXISTING WALLS. ALL EXISTING WALLS ARE DIMENSIONED FROM FACE OF FINISH, UNLESS NOTED OTHERWISE. ALL NEW WALLS ARE DIMENSIONED FROM FACE OF STUD UNLESS NOTED OTHERWISE. CONTRACTOR SHALL VERIFY ALL EXISTING DIMENSIONS & CONDITIONS IN THE FIELD BEFORE PROCEEDING WITH THE WORK.
10. SEE ENLARGED PLANS ON A5.1 & A5.2 FOR ADDITIONAL DIMENSIONS.
11. SEE A8.1 FOR WALL TYPES.
12. PROVIDE SHEATHING LAYER(S) REQUIRED PER STRUCTURAL AT AREAS OF WALL STRENGTHENING. PROVIDE GWB OVER SHEATHING AND AT ADJACENT WALL CONSTRUCTION AS REQUIRED FOR FINISHES TO ALIGN. REFER TO STRUCTURAL FOR EXTENTS OF STRENGTHENING WORK.
13. WHERE EXISTING DUCTS ARE REMOVED, INFILL EXISTING WALLS TO MATCH ADJACENT CONSTRUCTION AND FINISHES. FINISHES TO ALIGN WITH EXISTING. REFER TO MECHANICAL.
14. WHERE GWB IS TO REMAIN, PATCH AND REPAIR ALL DAMAGE. PREP AND PAINT GWB AS REQUIRED PER FINISH SCHEDULE.
15. AT EXTERIOR WALL PENETRATIONS TO BE INFILLED, MATCH EXISTING ADJACENT WALL CONSTRUCTION, FINISHES AND JOINT PATTERNING. TIE NEW WRB INTO EXISTING BUILDING PAPER WHERE OCCURS.
16. WHERE FINISHES HAVE BEEN REMOVED FOR ACCESS TO STRUCTURAL, ELECTRICAL, MECHANICAL OR PLUMBING WORK, INSTALL NEW FINISHES TO ALIGN WITH ADJACENT CONSTRUCTION.
17. WHERE FINISHES HAVE BEEN REMOVED FOR OR DAMAGED BY ANY WORK, PATCH AND REPAIR AFFECTED FINISHES

PLAN LEGEND

- EXISTING WALL
- NEW WALL
- 1 HR SEPARATION - CONT. TO UNDERSIDE OF ROOF/ FLOOR ASSEMBLY
- 1/2 HR SEPARATION - CONT. TO UNDERSIDE OF FLOOR/ ROOF ASSEMBLY

0 4' 8' 16'
1/8" = 1'

TCA
ARCHITECTURE + PLANNING + DESIGN
6211 ROOSEVELT WAY NORTHEAST
SEATTLE, WA 98115
tel: (206) 522-3830
fax: (206) 522-2456
6235 REGISTERED ARCHITECT
BRIAN J. HARRIS
STATE OF WASHINGTON
11/14/2023
EXPIRES: 03/03/2024

BID SET

No.	Description	Date:
2	ADDENDUM 2	12/07/23

Project Title:

FIRE STATION 26 RENOVATION

CITY OF KIRKLAND
9930 124TH AVE NE KIRKLAND, WA 98033

Sheet Title:

FLOOR PLAN LEVELS 1 & 2

Scale: 1/8" = 1'-0"
Project No. : 22-27-26
Date : 11/14/2023

Sheet Number :

A2.5

Autodesk Docs://22-27-26 Kirkland FS 26/22-27-26_Kirkland FS26_Arch_R23_BID.rvt

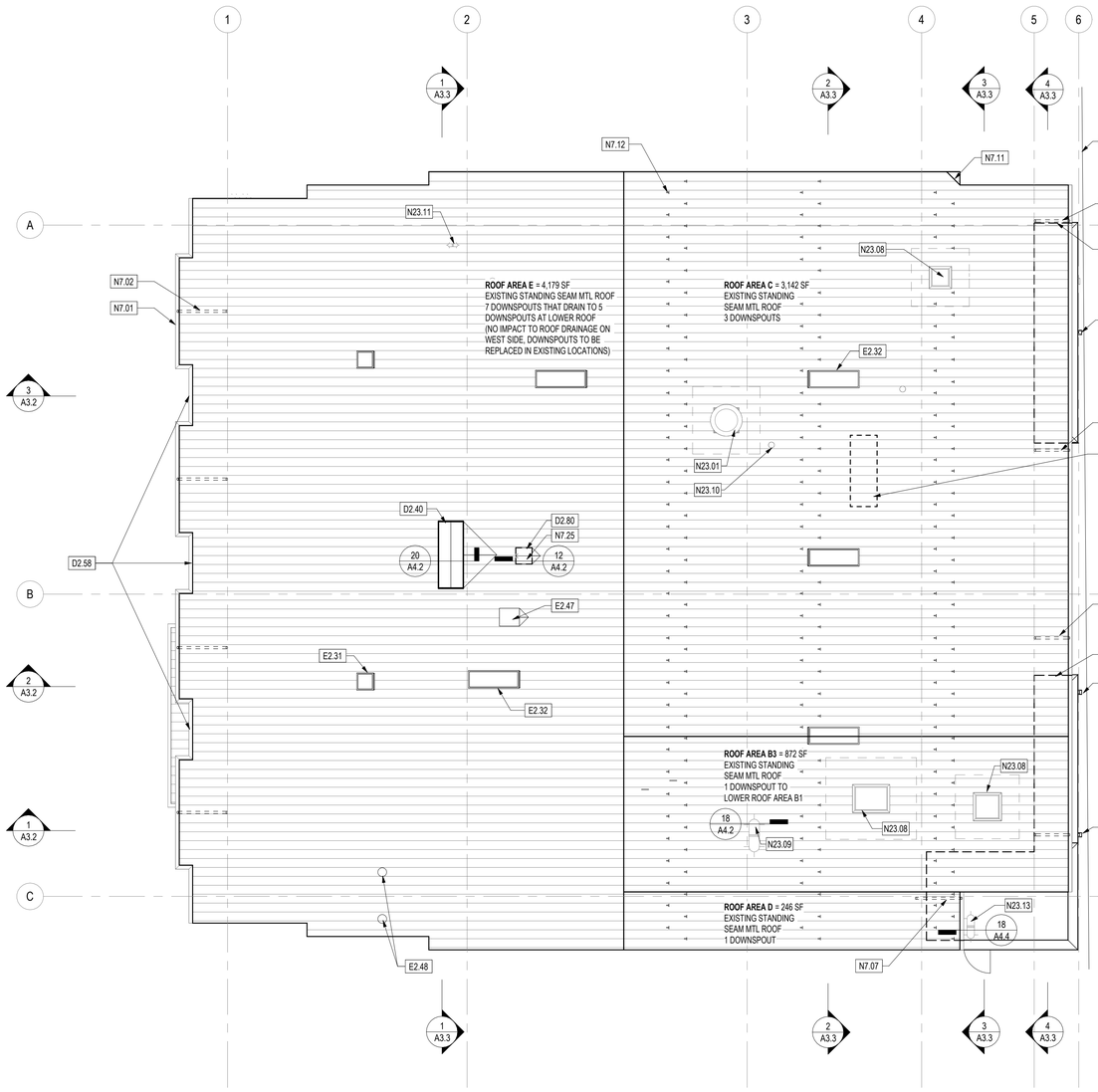

1 ROOF PLAN
Scale: 1/8" = 1'-0"

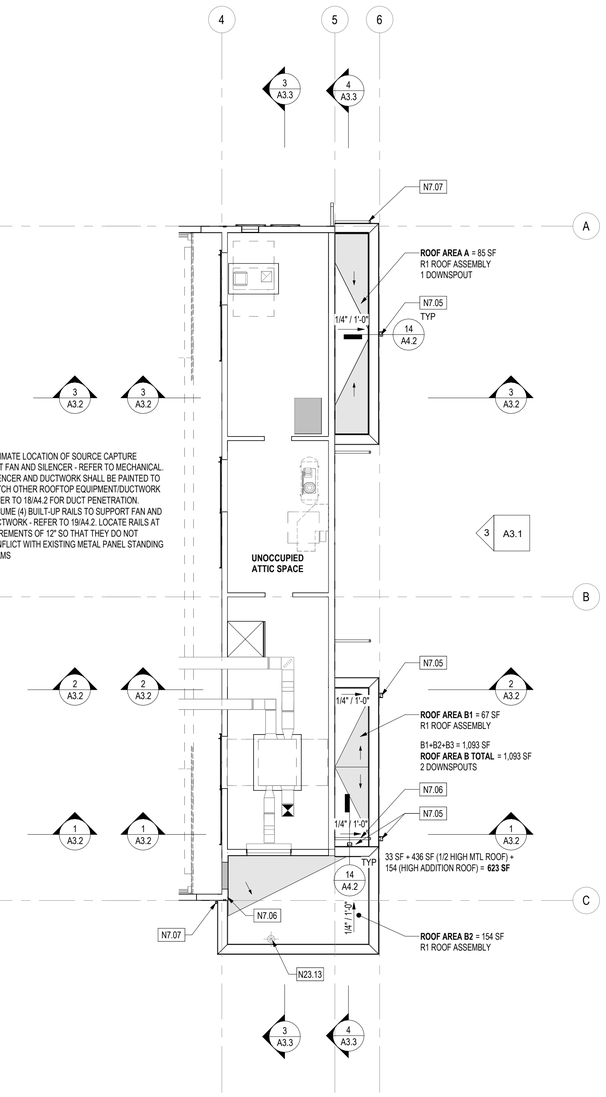

2 ROOF PLAN - ADDITIONS
Scale: 1/8" = 1'-0"

ROOF PLAN GENERAL NOTES

1. VERIFY LOCATION OF ROOF PENETRATION W/ MECHANICAL & PLUMBING DRAWINGS. CUT EXISTING ROOFING FOR NEW PENETRATIONS, FLASH PENETRATIONS AND PATCH ROOFING AS NEEDED. FLASHING FOR PENETRATIONS SHALL BE TIED INTO EXISTING ROOF SYSTEM.
2. NEW ROOFTOP FANS, PENTHOUSES, STACKS, ETC SHALL BE PREFINISHED OR PAINTED TO MATCH EXISTING STANDING SEAM METAL ROOF.
3. PROVIDE CRICKETS SLOPED AT 1/2":12" AT ROOF PENETRATIONS.
4. PROVIDE DRAIN MTL SCREENS AT ALL DOWNSPOUTS.
5. REFER TO MECHANICAL AND PLUMBING FOR CAPPING AND SEALING OF EXISTING ROOF PENETRATIONS. ASSUME 10 FLUE OR ROOFING VENT PIPE PENETRATIONS AND 5 ROOF CAPS.
6. EXISTING ROOF TO BE CLEANED OF ALL DIRT AND DEBRIS DURING LIMITED NOTICE TO PROCEED AND AFTER COMPLETION OF WORK. COORDINATE WITH OWNER'S CONSULTANT FOR ROOF INSPECTION AND EVALUATION AFTER INITIAL CLEANING.
7. NEW ROOFTOP FANS, PENTHOUSES, STACKS, ETC SHALL BE PREFINISHED OR PAINTED TO MATCH EXISTING STANDING SEAM METAL ROOF.

ROOF DRAINAGE CALCULATIONS

SEATTLE IPH = 3.3
360 SQUARE FEET (SF) ROOF AREA PER SQUARE INCH (SI) OF DOWNSPOUT (PER SMACNA TABLE 1-2)

FOR DOWNSPOUTS:
3"Ø DOWNSPOUT = 7.07 SI (PER SMACNA TABLE 1-3)
360 SF/SI x 7.07 SI PER DOWNSPOUT = 2,540.16 SF PER DOWNSPOUT

FOR SCUPPERS:
GPM = 0.0104 IPH X AREA (SF)
H = 1
CIRCUMFERENCE OF ROOF DRAIN REQUIRED = 9.42", SCUPPER L = 10"
FROM TABLE G-1, SCUPPER WITH L = 10 IN HAS A CAPACITY OF 29.3 GPM

ROOF AREA A = 85 SF
GPM = (0.0104) X 3.3 IPH X 85 SF
GPM = 2.92
2.92 / 29.3 = 1 SCUPPER REQUIRED, 1 SCUPPER PROVIDED

ROOF AREA B2 = 154 SF
GPM = GPM = (0.0104) X 3.3 IPH X 85 SF
GPM = 5.28
5.28 / 29.3 = 1 SCUPPER REQUIRED, 1 SCUPPER PROVIDED

ROOF AREA B3 = 872 SF
1 DOWNSPOUT REQUIRED
1 DOWNSPOUTS PROVIDED

ROOF AREA B = 1,093 SF
GPM = (0.0104) X 3.3 IPH X 1,093 SF
GPM = 37.51
37.51 / 29.3 = 2 SCUPPERS REQUIRED, 2 SCUPPERS PROVIDED

ROOF AREA C = 3,142 SF
2 DOWNSPOUT REQUIRED
3 DOWNSPOUTS PROVIDED

ROOF AREA D = 246 SF
1 DOWNSPOUT REQUIRED
1 DOWNSPOUT PROVIDED

ROOF AREA E = 4,179 SF
2 DOWNSPOUTS REQUIRED
4 DOWNSPOUTS PROVIDED
(LOW ROOF DOWNSPOUTS UNAFFECTED)

KEYNOTE LEGEND

D2.40	EXISTING BOILER FLUE TO BE REMOVED PER MECHANICAL. PROVIDE NEW SHEET METAL CAP FOR CHIMNEY PER ARCHITECTURAL DETAILS.
D2.58	EXISTING DOWNSPOUTS TO BE REMOVED
D2.80	EXISTING AIR INTAKE TO BE REMOVED - REFER TO MECHANICAL. CURB TO REMAIN.
E2.23	DASHED LINE INDICATES EXTENTS OF EXISTING CITY LIGHT EASEMENT
E2.31	EXISTING SKYLIGHT TO REMAIN, TYP.
E2.32	EXISTING SKYLIGHT TO REMAIN; REPLACE/REPAIR SCRIM AROUND SKYLIGHT OPENINGS, TYP.
E2.47	EXISTING ELEVATOR VENT TO REMAIN
E2.48	PROTECT EXISTING ANTENNAE, TYP AND REROUTE ANTENNAE CONDUIT TO NEW LOCATIONS
N1.09	LINE OF NEW WALL BELOW, TYP.
N7.01	REPLACE EXISTING GUTTER WITH NEW PRE-FINISHED METAL GUTTER W/ GUTTER GUARDS, TYP. AT ALL LOCATIONS (PROFILE TO MATCH EXISTING)
N7.02	REPLACE EXISTING DOWNSPOUT WITH NEW PRE-FINISHED MTL DOWNSPOUT, TYP. AT ALL LOCATIONS UON (MATCH EXISTING)
N7.05	PRE-FINISHED METAL SCUPPER AND DOWNSPOUT, TYP. PROVIDE NEW CONNECTION INTO NEW OR EXISTING TIGHTLINE PER CIVIL (PROFILE TO MATCH EXISTING)
N7.06	REMOVE EXISTING DOWNSPOUT AND PROVIDE NEW DOWNSPOUT TO DISCHARGE AT NEW ROOF (PROFILE TO MATCH EXISTING)
N7.07	PRE-FINISHED METAL DOWNSPOUT AT NEW LOCATION; PROVIDE NEW CONNECTION TO NEW OR EXISTING TIGHTLINE DRAIN PER CIVIL
N7.11	DIVERTER
N7.12	STAINLESS STEEL SNOW GUARDS CLAMPED TO STANDING SEAMS; PREFINISHED TO MATCH EXISTING ROOF, TYP.. (3) STAGGERED ROWS OF GUARDS ON EAST ROOF ONLY, EVENLY SPACED, AVOID ROOF PENETRATIONS AND SKYLIGHTS. BEND EXISTING STANDING SEAMS AS NECESSARY TO ACHIEVE MIN. DIMENSION TO ATTACH SNOW GUARDS.
N7.25	SHEATHE TOP OF MECHANICAL CURB AND ROOF OVER THE CURB
N23.01	EXHAUST FAN, PREFINISHED TO MATCH EXISTING - REFER TO MECHANICAL
N23.08	PENTHOUSE LOUVER, PREFINISHED TO MATCH EXISTING ROOF, TYP. - REFER TO MECHANICAL
N23.09	RANGE HOOD EXHAUST GOOSENECK, PAINTED TO MATCH EXISTING ROOF, TYP. - REFER TO MECHANICAL
N23.10	INFRARED HEATER FLUE, TYP. - REFER TO MECHANICAL
N23.11	DRYER EXHAUST GOOSENECK, PAINTED TO MATCH EXISTING ROOF, TYP. - REFER TO MECHANICAL
N23.13	ERV EXHAUST DUCT, PAINTED TO MATCH ADJACENT WALLS - REFER TO MECHANICAL

0 4' 8' 16'
1/8" = 1'

TCA
ARCHITECTURE + PLANNING + DESIGN
6211 ROOSEVELT WAY NORTHEAST
SEATTLE, WA 98115
tel: (206) 522-3830
fax: (206) 522-2456
6235 REGISTERED ARCHITECT
BRIAN J. HARRIS
STATE OF WASHINGTON
11/14/2023
EXPIRES: 03/03/2024

BID SET

No.	Description	Date:
2	ADDENDUM 2	12/07/23

Project Title:
FIRE STATION 26 RENOVATION
CITY OF KIRKLAND
9930 124TH AVE NE KIRKLAND, WA 98033

Sheet Title:
ROOF PLAN

Scale: As indicated
Project No. : 22-27-26
Date : 11/14/2023

Sheet Number :
A2.7

Autodesk Docs://22-27-26 Kirkland FS 26/22-27-26_Kirkland FS26_Arch_R23_BID.rvt

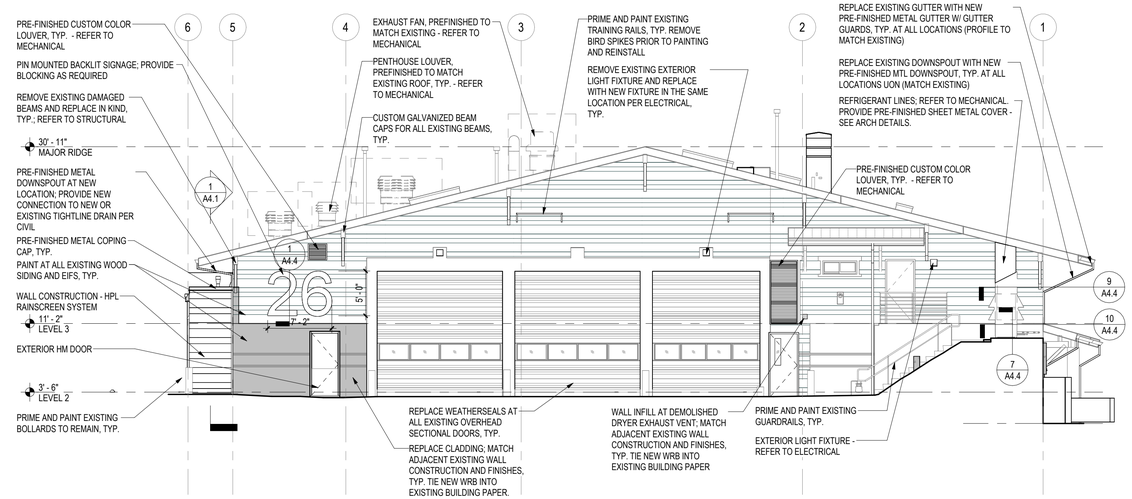

1 NORTH ELEVATION
Scale: 1/8" = 1'-0"

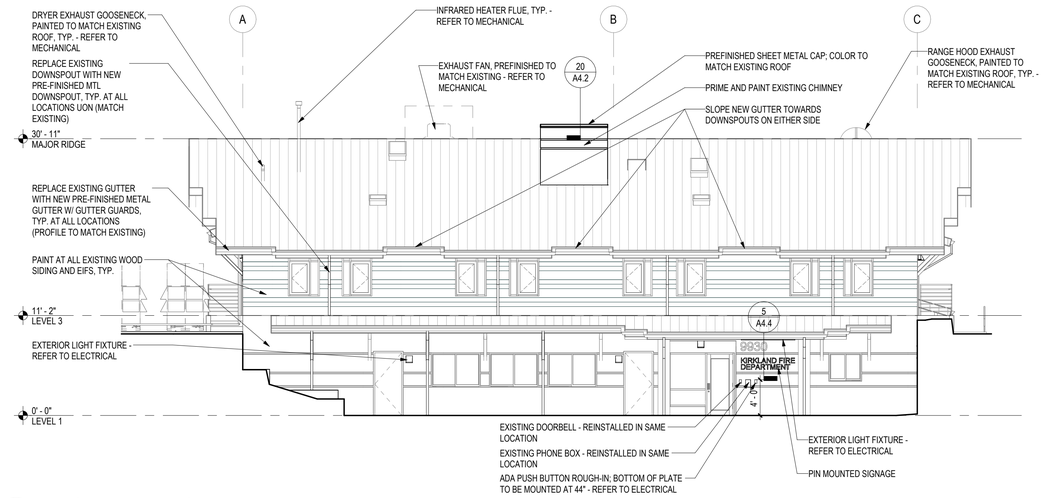

2 WEST ELEVATION
Scale: 1/8" = 1'-0"

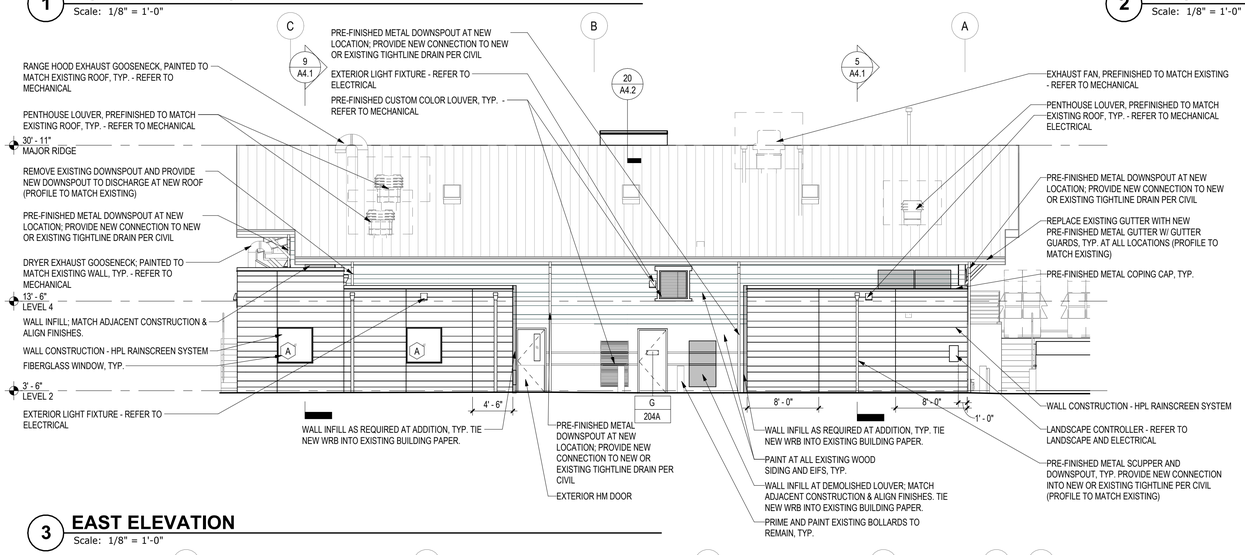

3 EAST ELEVATION
Scale: 1/8" = 1'-0"

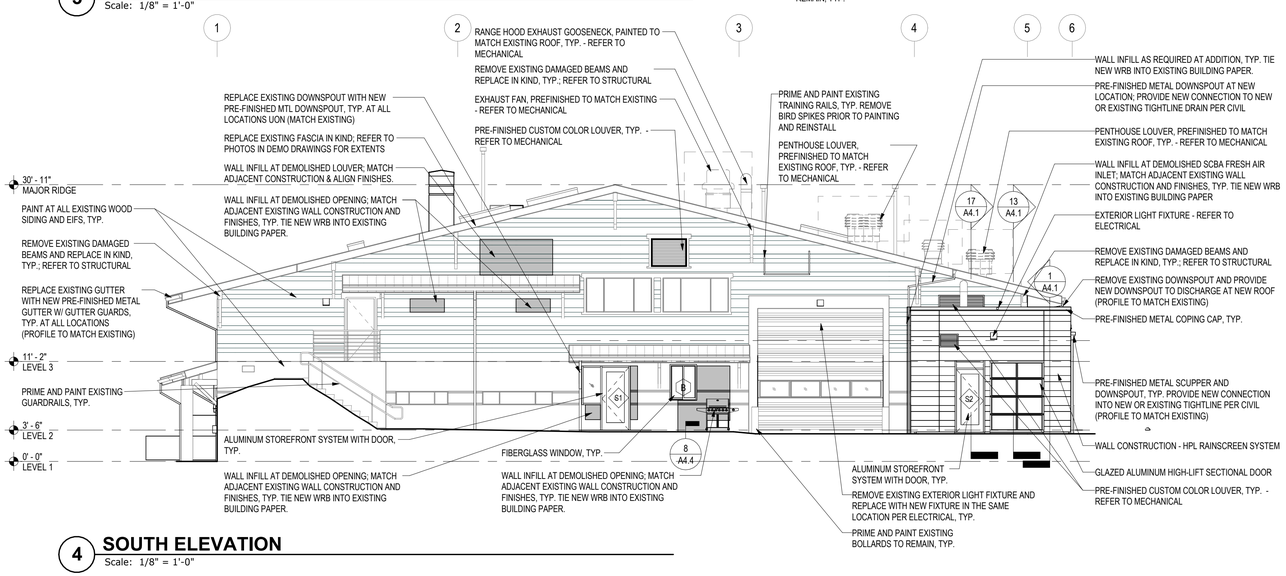

4 SOUTH ELEVATION
Scale: 1/8" = 1'-0"

GLAZING SCHEDULE

DESIGNATION	GLASS TYPE	ASSEMBLY
I	EXTERIOR DOUBLE GLAZED IGU	EXTERIOR GLASS: 1/4" LOW IRON GLASS WITH LOW-E COATING ON #2 SURFACE; ARGON FILLED AIR SPACE; INTERIOR GLASS: CLEAR
T	INTERIOR TEMPERED MONOLITHIC	1/4" CLEAR TEMPERED
T/I	EXTERIOR TEMPERED DOUBLE GLAZED IGU	EXTERIOR GLASS: 1/4" LOW IRON GLASS WITH LOW-E COATING ON #2 SURFACE; ARGON FILLED AIR SPACE; INTERIOR GLASS: CLEAR

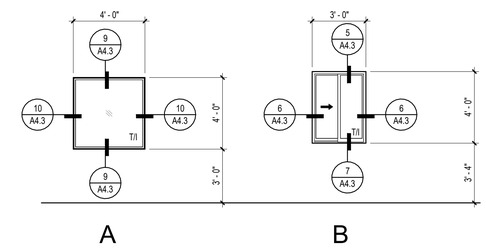

5 EXTERIOR WINDOW TYPES
Scale: 1/4" = 1'-0"

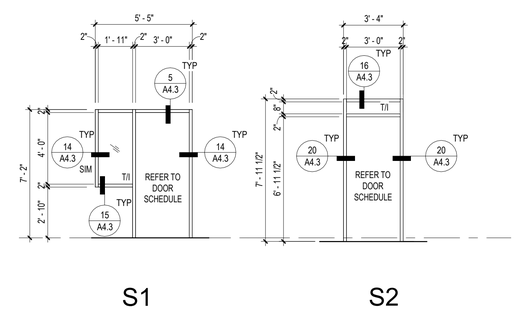

6 EXTERIOR STOREFRONT TYPES
Scale: 1/4" = 1'-0"

EXTERIOR ELEVATION GENERAL NOTES

1. CONTRACTOR TO VERIFY EXISTING CONDITIONS AND EXTENT OF DEMOLITION WORK PRIOR TO BIDDING.
2. SEE ARCHITECTURAL, STRUCTURAL, MECHANICAL, AND ELECTRICAL DEMO PLANS FOR ADDITIONAL INFORMATION.
3. REVIEW ALL CONTRACT DOCUMENTS FOR DEMOLITION REQUIRED BY THE WORK.
4. MECHANICAL, ELECTRICAL AND PLUMBING EQUIPMENT AND FIXTURES ARE SHOWN FOR REFERENCE ONLY. QUANTITIES AND LOCATIONS SHALL BE VERIFIED WITH MECHANICAL, ELECTRICAL, AND PLUMBING DRAWINGS.
5. ALL MECHANICAL, ELECTRICAL AND PLUMBING EQUIPMENT TO BE PREFINISHED OR PAINTED TO MATCH COLOR OF ADJACENT BUILDING FINISHES.
6. ALL EXISTING BUILDING WALLS, WINDOWS, DOORS, AND EXTERIOR SURFACES TO BE CLEANED. PREP SURFACES TO RECEIVE NEW PAINT AS REQUIRED.
7. AT EXTERIOR WALL PENETRATIONS TO BE INFILLED, MATCH EXISTING ADJACENT WALL CONSTRUCTION, FINISHES AND JOINT PATTERNING. TIE NEW WRB INTO EXISTING BUILDING PAPER WHERE OCCURS.

TCA
ARCHITECTURE + PLANNING + DESIGN
6211 ROOSEVELT WAY NORTHEAST
SEATTLE, WA 98115
tel: (206) 522-3830
fax: (206) 522-2456

6235 REGISTERED ARCHITECT
BRIAN J. HARRIS
STATE OF WASHINGTON
11/14/2023
EXPIRES: 03/03/2024

BID SET

No.	Description	Date:
2	ADDENDUM 2	12/07/23

Project Title:

FIRE STATION 26 RENOVATION
CITY OF KIRKLAND
9930 124TH AVE NE KIRKLAND, WA 98033

Sheet Title:

EXTERIOR ELEVATIONS

Scale: As indicated
Project No. : 22-27-26
Date : 11/14/2023

Sheet Number :
2
A3.1

Autodesk Docs://22-27-26 Kirkland FS 26/22-27-26_Kirkland FS26_Arch_R23_BID.rvt

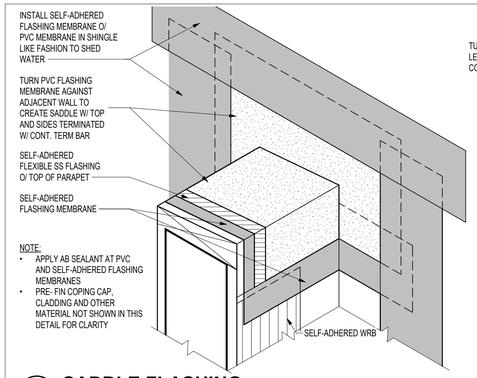

NOTE:
- APPLY AB SEALANT AT PVC AND SELF-ADHERED FLASHING MEMBRANES
- PRE- FIN COPING CAP, CLADDING AND OTHER MATERIAL NOT SHOWN IN THIS DETAIL FOR CLARITY

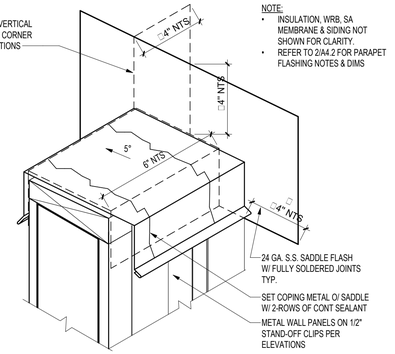

NOTE:
- INSULATION, WRB, SA MEMBRANE & SIDING NOT SHOWN FOR CLARITY.
- REFER TO 2/A4.2 FOR PARAPET FLASHING NOTES & DIMS

17 SADDLE FLASHING
Scale: 3" = 1'-0"

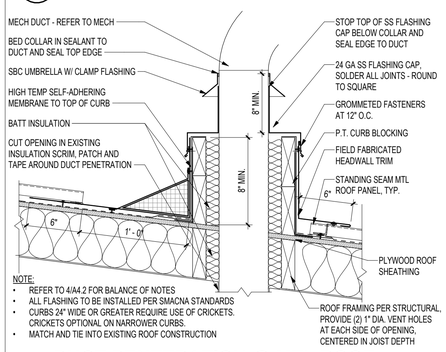

NOTE:
- REFER TO 4/A4.2 FOR BALANCE OF NOTES
- ALL FLASHING TO BE INSTALLED PER SMACNA STANDARDS
- CURBS 24" WIDE OR GREATER REQUIRE USE OF CRICKETS. CRICKETS OPTIONAL ON NARROWER CURBS.
- MATCH AND TIE INTO EXISTING ROOF CONSTRUCTION

18 DUCT PENETRATION @ MTL ROOF - UP/DOWN
Scale: 1 1/2" = 1'-0"

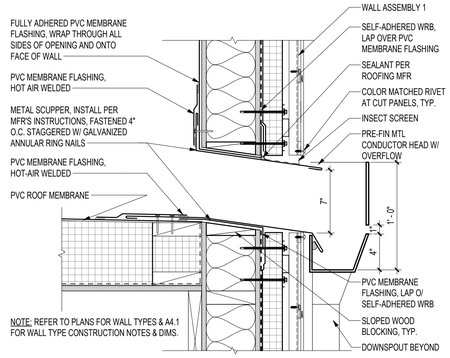

NOTE: REFER TO PLANS FOR WALL TYPES & A4.1 FOR WALL TYPE CONSTRUCTION NOTES & DIMS.

14 SCUPPER AND CONDUCTOR HEAD
Scale: 1 1/2" = 1'-0"

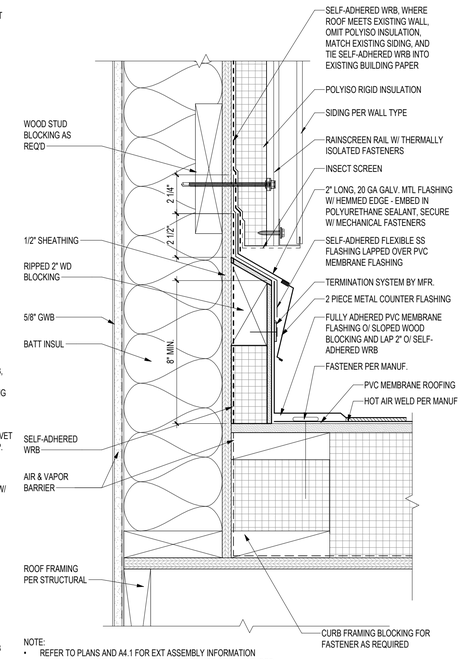

NOTE:
- REFER TO PLANS AND A4.1 FOR EXT ASSEMBLY INFORMATION
- ROOFING AND WRB SHALL BE INSTALLED PER MFR RECOMMENDED INSTRUCTIONS

10 ROOF TO WALL
Scale: 3" = 1'-0"

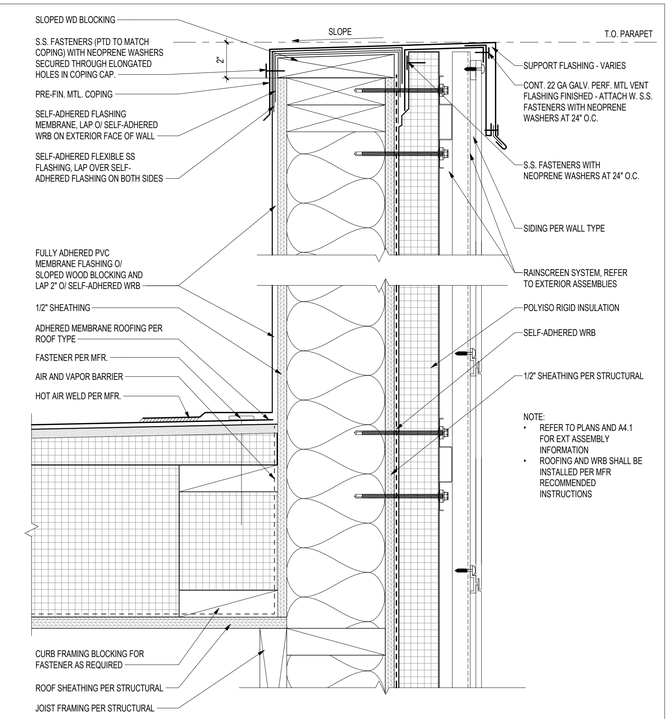

NOTE:
- REFER TO PLANS AND A4.1 FOR EXT ASSEMBLY INFORMATION
- ROOFING AND WRB SHALL BE INSTALLED PER MFR RECOMMENDED INSTRUCTIONS

2 PARAPET FLASHING DIAGRAM
Scale: 3" = 1'-0"

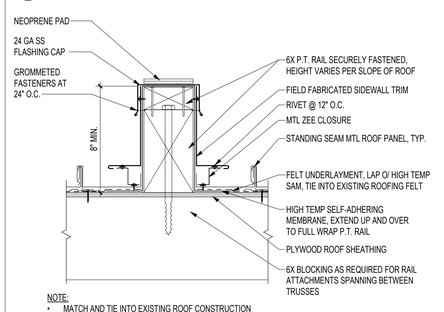

NOTE:
- MATCH AND TIE INTO EXISTING ROOF CONSTRUCTION
- INSTALL RAILS PARALLEL TO DIRECTION OF ROOF SLOPE
- ALL PENETRATIONS FOR SECURING MECH. SUPPORTS SHALL BE PILOT-DRILLED & FILLED W/ SEALANT PRIOR TO INSTALLING FASTENER

19 EQUIPMENT SUPPORT
Scale: 1 1/2" = 1'-0"

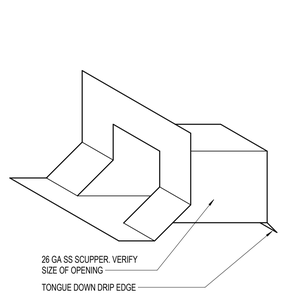

15 TYP. SCUPPER BOX
Scale: 1 1/2" = 1'-0"

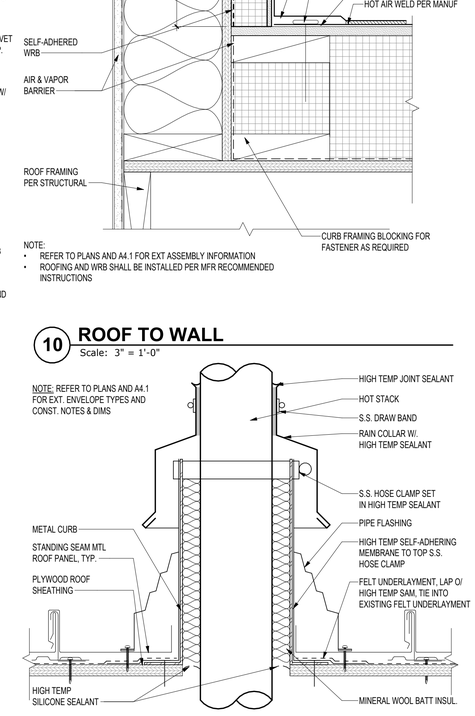

NOTE: REFER TO PLANS AND A4.1 FOR EXT. ENVELOPE TYPES AND CONST. NOTES & DIMS

11 HEATED VENT STACK
Scale: 3" = 1'-0"

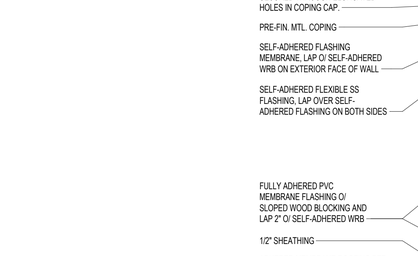

NOTE: REFER TO PLANS AND A4.1 FOR EXT. ENVELOPE TYPES AND CONST. NOTES & DIMS

7 VENT STACK @ MTL ROOF
Scale: 3" = 1'-0"

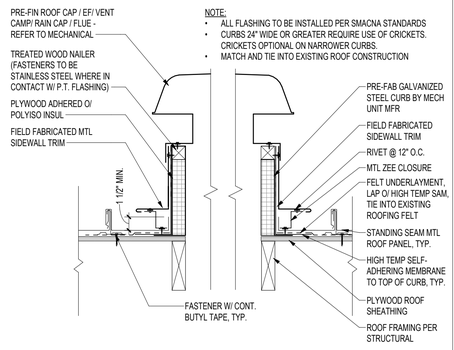

NOTE:
- ALL FLASHING TO BE INSTALLED PER SMACNA STANDARDS
- CURBS 24" WIDE OR GREATER REQUIRE USE OF CRICKETS. CRICKETS OPTIONAL ON NARROWER CURBS.
- MATCH AND TIE INTO EXISTING ROOF CONSTRUCTION

3 FAN CURB @ MTL ROOF - SIDE
Scale: 1 1/2" = 1'-0"

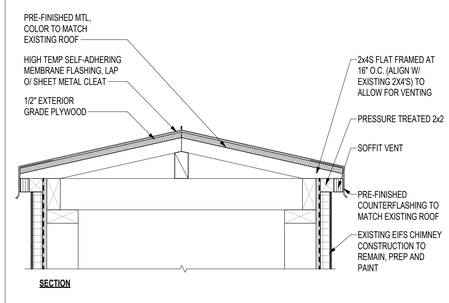

20 CHIMNEY
Scale: 1 1/2" = 1'-0"

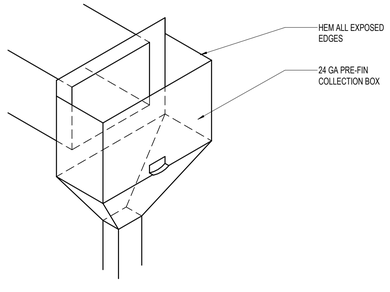

16 TYP. COLLECTION BOX
Scale: 1 1/2" = 1'-0"

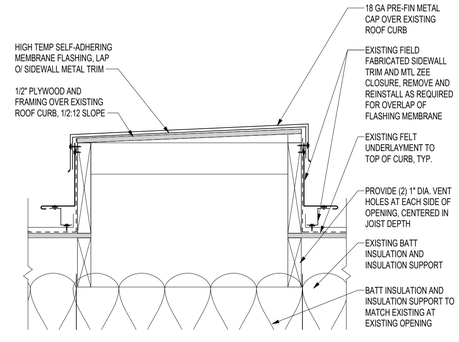

12 EXISTING CURB
Scale: 1 1/2" = 1'-0"

NOTE:
- PIPE MUST BE SUPPORTED TO PREVENT VERTICAL OR LATERAL MOVEMENT
- BOOT MUST LAP A MINIMUM OF 12" ON PIPE. APPLY SKINNING SEALANT BETWEEN BOOT AND PIPE.
- PENETRATIONS SHOULD BE CENTERED IN PANELS AS MUCH AS POSSIBLE

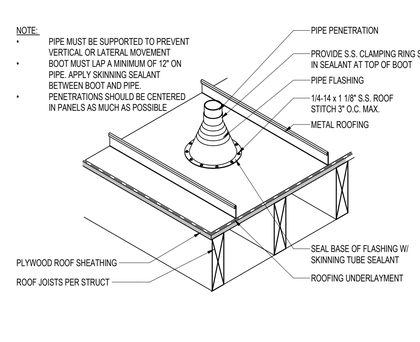

8 VENT STACK @ MTL ROOF
Scale: 1 1/2" = 1'-0"

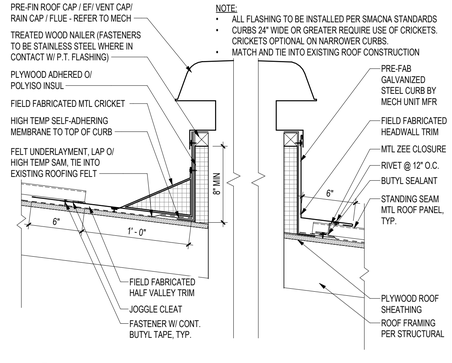

NOTE:
- ALL FLASHING TO BE INSTALLED PER SMACNA STANDARDS
- CURBS 24" WIDE OR GREATER REQUIRE USE OF CRICKETS. CRICKETS OPTIONAL ON NARROWER CURBS.
- MATCH AND TIE INTO EXISTING ROOF CONSTRUCTION

4 FAN CURB @ MTL ROOF - UP/DOWN
Scale: 1 1/2" = 1'-0"

TCA
ARCHITECTURE + PLANNING + DESIGN
6211 ROOSEVELT WAY NORTHEAST
SEATTLE, WA 98115
tel: (206) 522-3830
fax: (206) 522-2456
6235 REGISTERED ARCHITECT
BRIAN J. HARRIS
STATE OF WASHINGTON
11/14/2023
EXPIRES: 03/03/2024

BID SET

No.	Description	Date:
2	ADDENDUM 2	12/07/23

Project Title:

FIRE STATION 26 RENOVATION

CITY OF KIRKLAND
9930 124TH AVE NE KIRKLAND, WA 98033

Sheet Title:

EXTERIOR DETAILS

Scale: As indicated
Project No. : 22-27-26
Date : 11/14/2023

Sheet Number :

A4.2

Autodesk Docs://22-27-26 Kirkland FS 26/22-27-26_Kirkland FS26_Arch_R23_BID.rvt

NOTE:

- REFER TO 4/A4.3FOR THRESHOLD FLASHING REQUIREMENTS
- REFER TO PLANS AND A4.1 FOR EXT ASSEMBLY INFORMATION
- ALL THRESHOLDS TO COMPLY WITH IBC SEC 1008.1.6.

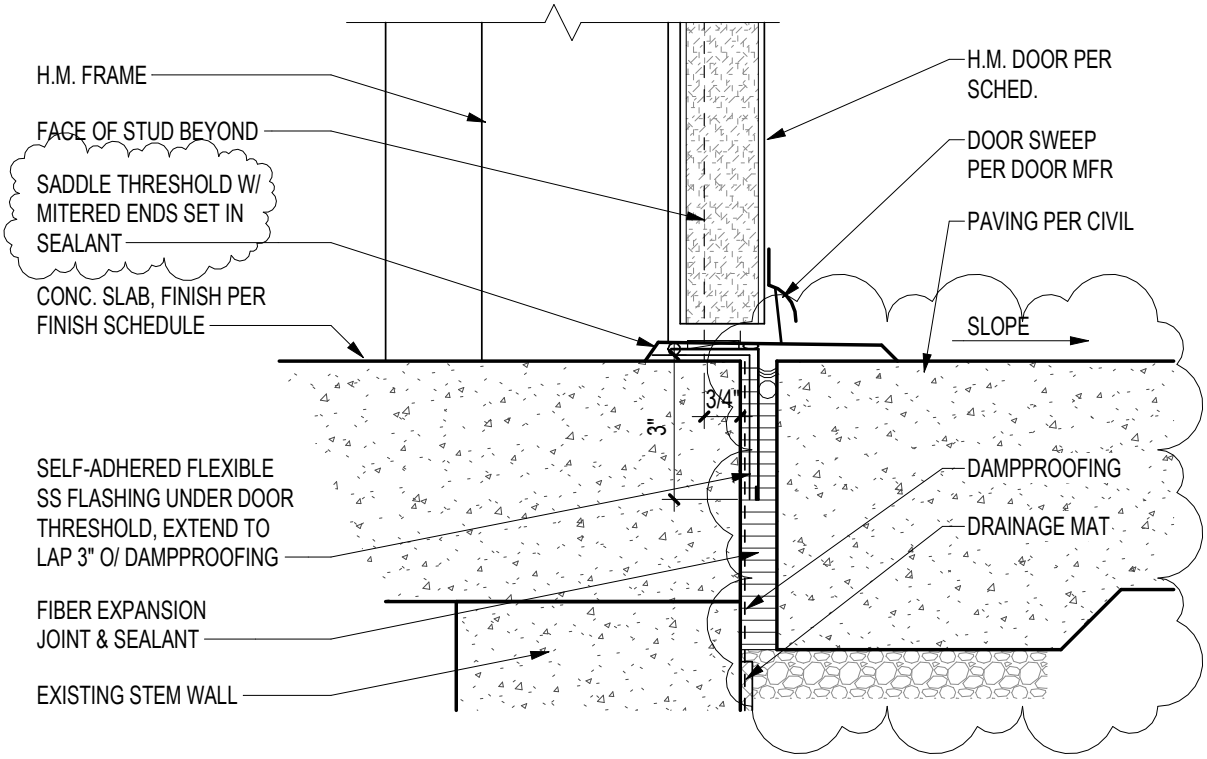

T C A
ARCHITECTURE + PLANNING + DESIGN
6211 ROOSEVELT WAY NE
SEATTLE, WA 98115
tel: (206) 522-3830

EXT. HM DOOR THRESHOLD

FIRE STATION 26 RENOVATION

SCALE:	3" = 1'-0"
DATE:	12/06/23
PROJECT NO:	22-27-26
REFERENCE NUMBER:	AD 2 ASK-3
REFERENCE SHEET:	19/A4.3

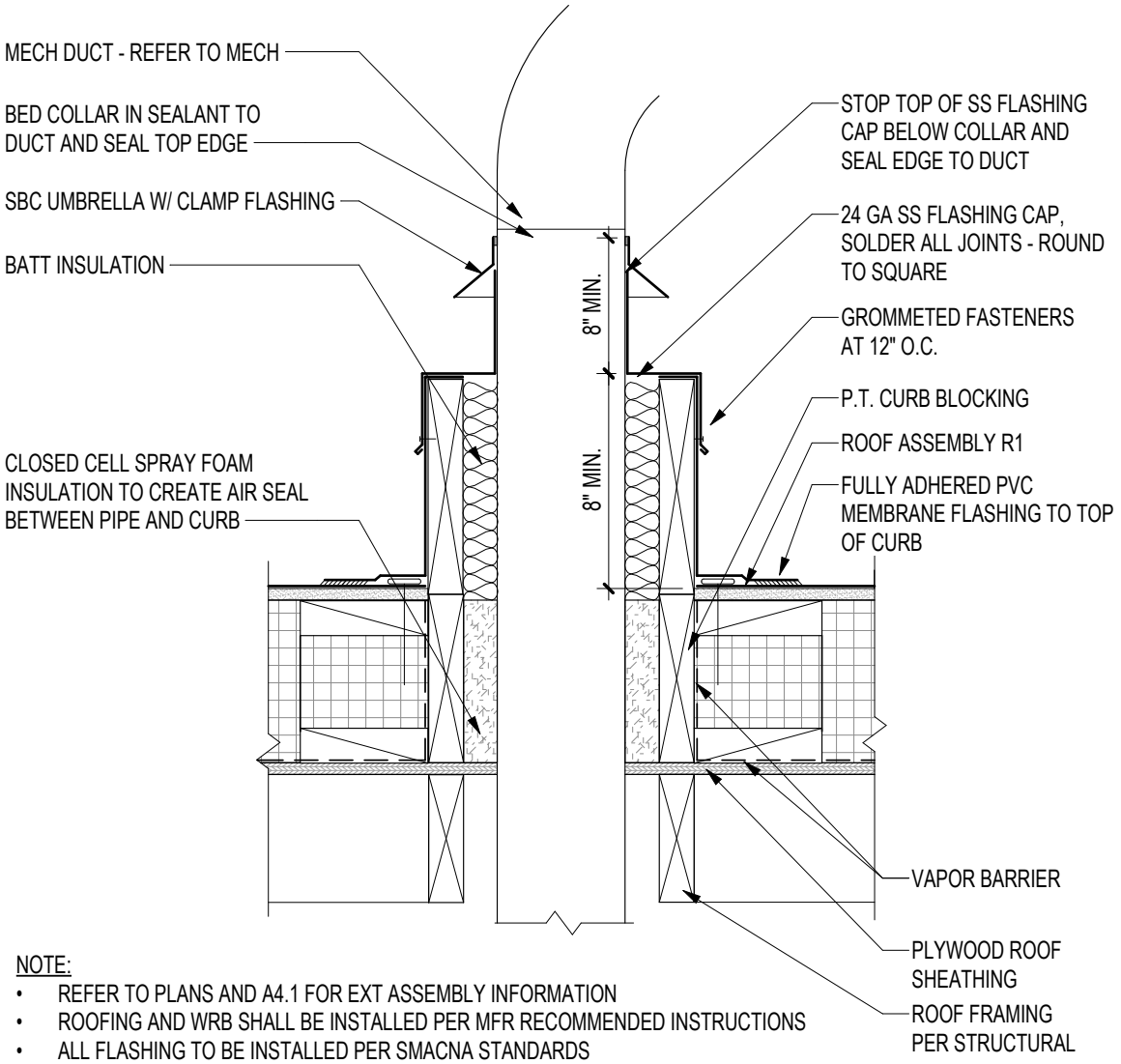

NOTE:

- REFER TO PLANS AND A4.1 FOR EXT ASSEMBLY INFORMATION
- ROOFING AND WRB SHALL BE INSTALLED PER MFR RECOMMENDED INSTRUCTIONS
- ALL FLASHING TO BE INSTALLED PER SMACNA STANDARDS
- CURBS 24" WIDE OR GREATER REQUIRE USE OF CRICKETS. CRICKETS OPTIONAL ON NARROWER CURBS.
- MATCH AND TIE INTO EXISTING ROOF CONSTRUCTION

TCA
ARCHITECTURE + PLANNING + DESIGN
6211 ROOSEVELT WAY NE
SEATTLE, WA 98115
tel: (206) 522-3830

DUCT PENETRATION AT PVC ROOF (NEW DETAIL REFERENCED FROM A2.7)

FIRE STATION 26 RENOVATION

SCALE:	1 1/2" = 1'-0"
DATE:	12/07/23
PROJECT NO:	22-27-26
REFERENCE NUMBER:	AD 2 ASK-4
REFERENCE SHEET:	18/A4.4

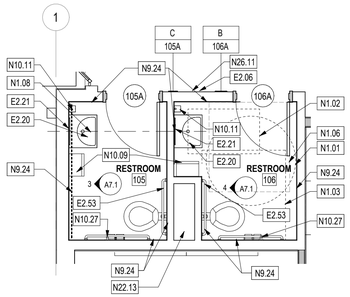

1 105, 106 RESTROOMS

Scale: 1/4" = 1'-0"

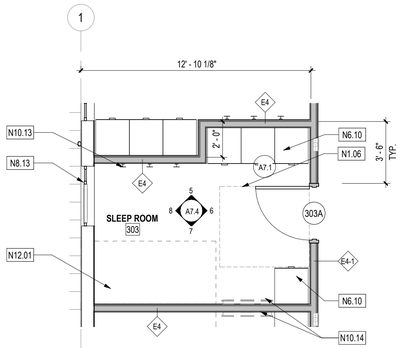

2 303 TYPICAL SLEEP ROOM 300, 301, 302, 304, 305, 306, 307 SIM.

Scale: 1/4" = 1'-0"

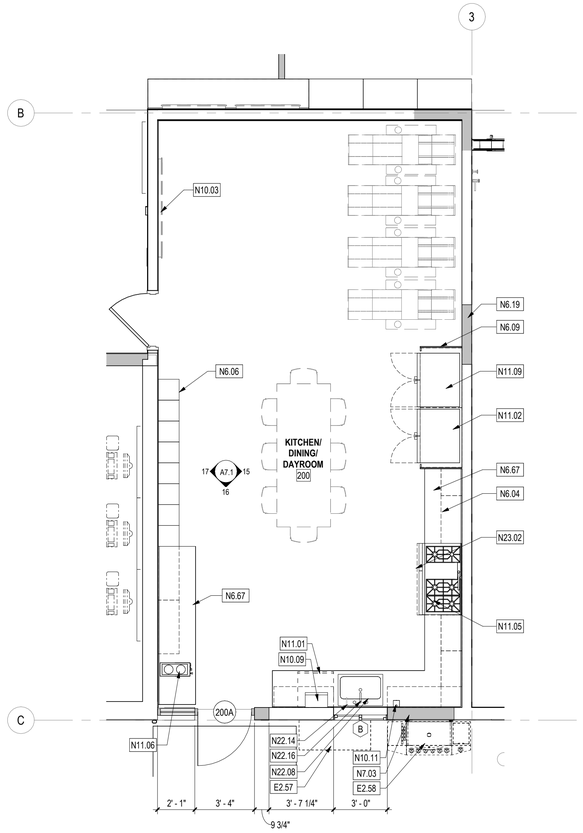

3 200 KITCHEN DINING DAYROOM

Scale: 1/4" = 1'-0"

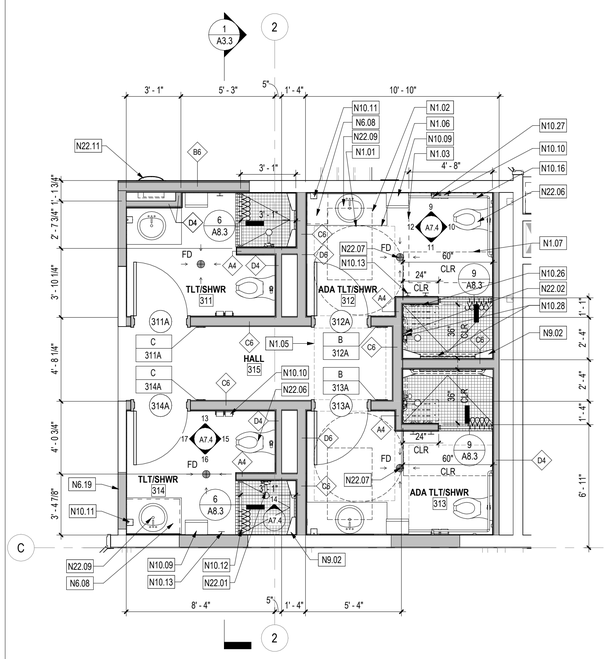

4 311, 312, 313, 314 TLT/SHOWERS

Scale: 1/4" = 1'-0"

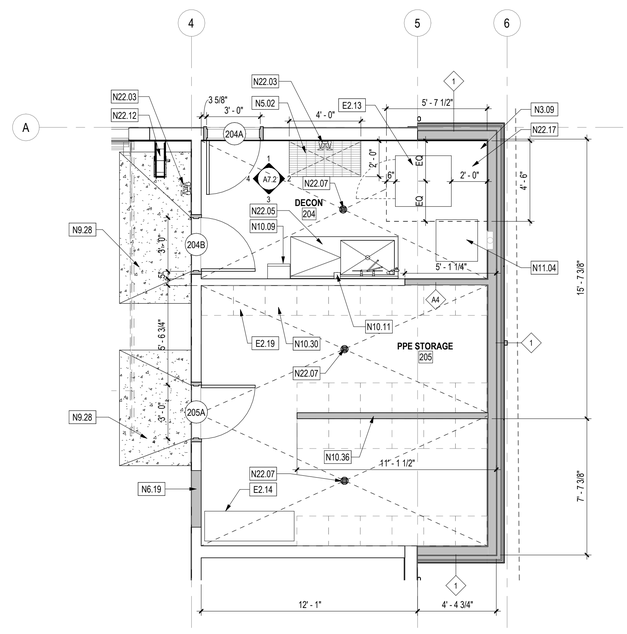

5 204 DECON AND 205 PPE STORAGE

Scale: 1/4" = 1'-0"

KEYNOTE LEGEND

E2.06	EXISTING NORTH ROSE HILL FS PLAQUE - REINSTALLED IN SAME LOCATION BY GC
E2.13	EXISTING EXTRACTOR INSTALLED AT INDICATED LOCATION; MAINTAIN A LEVEL SLAB UNDER THE EXTRACTOR
E2.14	EXISTING INSTALLED AT INDICATED LOCATION GEAR DRYER - OFOI
E2.19	EXISTING (27) 20" WALL MOUNTED TURNOUT GEAR LOCKERS - REINSTALLED AT INDICATED LOCATIONS
E2.20	ALL EXISTING RESTROOM FIXTURES AND ACCESSORIES IN PUBLIC RESTROOMS - REINSTALLED AFTER INSTALLATION OF NEW FLOOR AND WALL FINISHES UON, TYP. RESTROOMS 105 AND 106
E2.21	EXISTING MIRROR - REINSTALLED AT SAME HEIGHT BUT CENTERED HORIZONTALLY OVER EXISTING SINK LOCATION AFTER INSTALLATION OF CERAMIC TILE
E2.53	EXISTING HORIZONTAL GRAB BARS - REINSTALLED PER T1.4 DIAGRAMS
E2.57	EXISTING BBQ SMOKER - OFOI
E2.58	EXISTING BBQ - OFOI
N1.01	60" DIA. TURNING RADIUS, TYP.
N1.02	30" X 48" FORWARD APPROACH AT LAV., TYP.
N1.03	60" X 56" CLEARANCE AT WC, TYP.
N1.05	48" X 48" DOOR PUSH CLEARANCE, TYP.
N1.06	54" X 60" DOOR PULL CLEARANCE, TYP.
N1.07	30" X 60" FORWARD APPROACH AT SHOWER, TYP.
N1.08	CL OF MIRROR, LIGHT FIXTURE AND LAVATORY
N3.09	AREA OF 10" THICK SLAB ON GRADE - REFER TO STRUCTURAL
N5.02	FLOOR GRATE O/ 4" DEPRESSED SLAB, TYP.
N6.04	P-LAM UPPER CABINET W/ ADJUSTABLE SHELVES, 3" LIGHT VALANCE, TYP.
N6.06	P-LAM FOOD & STORAGE LOCKERS
N6.08	SOLID SURFACE COUNTERTOP W/ 4" BACKSPLASH
N6.09	P-LAM END PANEL
N6.10	24" DEEP P-LAM LOCKERS W/ HANGING BAR & ADJUST. SHELVES, SCRIBE TO SOFFIT & WALLS
N6.19	WALL INFILL; MATCH ADJACENT CONSTRUCTION & ALIGN FINISHES.
N6.67	SOLID SURFACE COUNTERTOP W/ 4" BACKSPLASH WHERE INDICATED - REFER TO INT. ELEVATIONS
N7.03	WALL INFILL AT DEMOLISHED OPENING; MATCH ADJACENT EXISTING WALL CONSTRUCTION AND FINISHES, TYP. TIE NEW WRB INTO EXISTING BUILDING PAPER.
N8.13	PROVIDE WINDOW SCREENS AT ALL EXISTING WINDOWS, TYP.
N9.02	STAINLESS STEEL QUADRILATERAL SHOWER SHELF, (2) PER SHOWER, TYP.
N9.24	PROVIDE WALL FINISH LAYER PER FINISH SCHEDULE OR TO MATCH ADJACENT WALL CONSTRUCTION AT AREAS OF WALL STRENGTHENING. FINISHES TO ALIGN WITH ADJACENT WALL CONSTRUCTION. DASHED LINE INDICATES EXTENTS - REFER TO STRUCTURAL FOR SHEATHING AND ADDITIONAL REQUIREMENTS.
N9.28	DECORATIVE CONCRETE OVERLAYMENT AT OPENINGS AS NEEDED TO TRANSITION DIFFERENCE IN SLAB ELEVATIONS; SLOPE TO BE NO MORE THAN 2% PER ANSI 117.1-2009. EXTENTS SHOWN ARE APPROXIMATE, FIELD VERIFY ALL NEW AND EXISTING SLOPES.
N10.03	TV - OFOI, W/ TILT SWIVEL WALL MOUNT - OFCI; CONTRACTOR TO PROVIDE BLOCKING AT LOCATIONS COORDINATED W/ OWNER
N10.09	SURFACE MOUNT HANDS-FREE PAPER TOWEL DISPENSER - OFCI, TYP.
N10.10	SURFACE MOUNT TOILET PAPER DISPENSER, TYP.
N10.11	SOAP DISPENSER - OFCI, TYP.
N10.12	SHOWER ROD AND CURTAIN, TYP.
N10.13	TOWEL HOOKS - PROVIDE BLOCKING; CONFIRM LOCATION PRIOR TO INSTALL, TYP.
N10.14	TV MONITOR W/ TILT SWIVEL WALL MOUNT, BOTH OFOI. PROVIDE BLOCKING FOR WALL MOUNT. CONFIRM LOCATION WITH OWNER PRIOR TO INSTALL.
N10.16	CONTINUOUS HORIZONTAL GRAB BAR, TYP.
N10.26	PROVIDE BLOCKING FOR FUTURE SHOWER SEAT
N10.27	18" VERTICAL GRAB BAR
N10.28	PROVIDE BLOCKING FOR FUTURE GRAB BARS, TYP.
N10.30	(27) TOP STORAGE UNITS FOR EXISTING REINSTALLED LOCKERS, MOUNTING AND SUPPORT AS REQUIRED
N10.36	TUBULAR FRAME WALL BY LOCKER MFR
N11.01	DISHWASHER
N11.02	REFRIGERATOR W/ ICE MAKER, TYP.
N11.04	DRYER; PROVIDE HOOKUPS FOR FUTURE STACKABLE WASHER/DRYER
N11.05	GAS RANGE
N11.06	PLUMBED COFFEE MAKER - OFOI; COORDINATE EXACT LOCATION W/ OWNER. REFER TO PLUMBING FOR PLUMBED CONNECTION
N11.09	REFRIGERATOR
N12.01	BED AND FRAME - OFOI
N22.01	HANDHELD SHOWER HEAD - REFER TO PLUMBING
N22.02	HANDHELD SHOWER HEAD W/ 36" VERTICAL SLIDE BAR AND FIXED HEAD W/ DIVERTER, TYP. - REFER TO PLUMBING
N22.03	HOSE BIBB WASH STATION, TYP. - REFER TO PLUMBING
N22.05	SINGLE COMPARTMENT 72" LONG STAINLESS STEEL DECON SINK W/ EYEWASH - REFER TO PLUMBING AND ARCHITECTURAL DETAILS
N22.06	WALL HUNG TOILET, TYP. - REFER TO PLUMBING
N22.07	FLOOR DRAIN, 5" STRAINER, TYP. - REFER TO PLUMBING
N22.08	SINK - REFER TO PLUMBING
N22.09	LAVATORY; WRAP EXPOSED DRAIN & WATER SUPPLY LINES W/ TEMPERATURE SHIELDING - WHITE FINISH, TYP. - REFER TO PLUMBING
N22.11	BOTTLE FILLER - REFER TO PLUMBING
N22.12	HOSE REEL - REFER TO PLUMBING
N22.13	CARRIER FOR EXISTING TOILETS - REFER TO PLUMBING
N22.14	HOT WATER DISPENSER - REFER TO PLUMBING
N22.16	GARBAGE DISPOSAL - REFER TO PLUMBING
N22.17	TRENCH DRAIN - REFER TO PLUMBING
N23.02	STAINLESS STEEL RANGE HOOD - REFER TO MECHANICAL
N26.11	ADA PUSH BUTTON ROUGH-IN; BOTTOM OF PLATE TO BE MOUNTED AT 44" - REFER TO ELECTRICAL

ENLARGED PLAN GENERAL NOTES

1. SEE INTERIOR ELEV. FOR GROMMETS IN CASEWORK.
2. PROVIDE DEPRESSED SLAB AT WASH ALCOVE AND SHOWERS TYP. (SEE STRUCT. FOUNDATION PLAN S2.1 FOR SLAB THICKNESS).
3. AT DECON AND CLEANING, MAINTAIN FLOOR LEVEL AT WALLS AND PITCH SURFACES UNIFORMLY TO DRAINS.
4. FLOORS OTHER THAN AT APPARATUS BAY, DECON, AND CLEANING WITH A FLOOR DRAIN SHALL HAVE A 1% MIN. SLOPE TO DRAIN STARTING 18" FROM CENTER OF DRAIN.
5. COORDINATE AND PROVIDE BACKING AND BLK'G REQ'D FOR CABINETS, GRAB BARS, HANDRAILS, MARKER BOARDS, TACKBOARDS, SHELVING AND OTHER EQUIPMENT AND HARDWARE PRIOR TO INSTALLING G.W.B. - CONT. X 6" 16 GA. FLAT STRAP W/ 2X6 MIN WOOD BLK'G REQUIRED AT ALL GRAB BARS AND HANDRAIL LOCATIONS. CONT. X 8" 16 GA. FLAT STRAP BACKING OK AT ALL OTHER LOCATIONS.
6. ALL DIMENSIONS & GRID LINES ARE FROM FACE OF BRICK/BLOCK &/OR FACE OF STUD & CENTERLINE OF COLUMNS, UNLESS NOTED OTHERWISE. CONTRACTOR TO VERIFY ALL EXISTING DIMENSIONS & CONDITIONS IN THE FIELD BEFORE PROCEEDING WITH THE WORK.
7. DOOR FRAMES IN GYP. BD PARTITIONS TO BE LOCATED 3" FROM ADJACENT WALL UNLESS SPECIFICALLY DIMENSIONED OR DETAILED OTHERWISE, TYP.
8. COORDINATE AND PROVIDE BACKING & BLK'G REQ'D FOR CABINETS AND HARDWARE PRIOR TO INSTALLING G.W.B.
9. SEE A4.1 AND A8.1 FOR WALL TYPES.
10. REFER TO FINISH SCHEDULE FOR FINISH INFORMATION.

PLAN LEGEND

- EXISTING WALL
- NEW WALL
- 1 HR SEPARATION - CONT. TO UNDERSIDE OF ROOF/ FLOOR ASSEMBLY
- 1/2 HR SEPARATION - CONT. TO UNDERSIDE OF FLOOR/ ROOF ASSEMBLY

0 2' 4' 8'
1/4" = 1'

TCA
ARCHITECTURE + PLANNING + DESIGN
6211 ROOSEVELT WAY NORTHEAST
SEATTLE, WA 98115
tel: (206) 522-3830
fax: (206) 522-2456

6235 REGISTERED ARCHITECT
BRIAN J. HARRIS
STATE OF WASHINGTON
11/14/2023
EXPIRES: 03/03/2024

BID SET

No.	Description	Date:
2	ADDENDUM 2	12/07/23

Project Title:

FIRE STATION 26 RENOVATION

CITY OF KIRKLAND
9830 124TH AVE NE KIRKLAND, WA 98033

Sheet Title:

ENLARGED FLOOR PLANS

Scale: As indicated
Project No. : 22-27-26
Date : 11/14/2023
Sheet Number :

2

A5.1

Autodesk Docs://22-27-26 Kirkland FS 26/22-27-26_Kirkland FS26_Arch_R23_BID.rvt

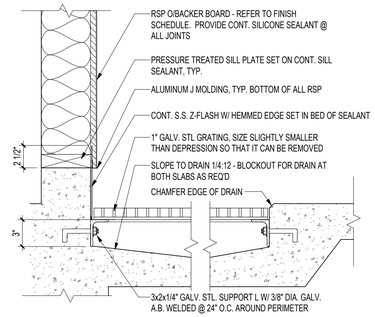

13 FLOOR GRATE/CONC. BASIN SECTION AT FRWC

Scale: 1 1/2" = 1'-0"

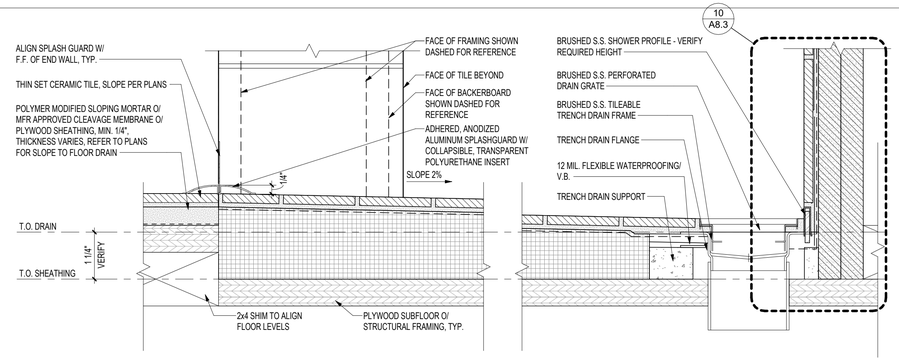

9 ADA SHOWER ENCLOSURE SECTION (TILE) - FRAMED

Scale: 6" = 1'-0"

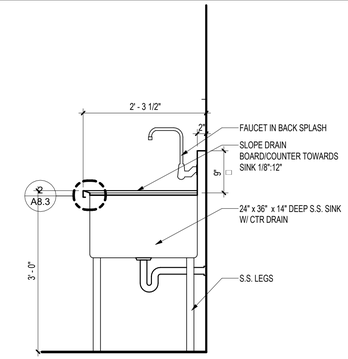

1 DECON SINK

Scale: 3/4" = 1'-0"

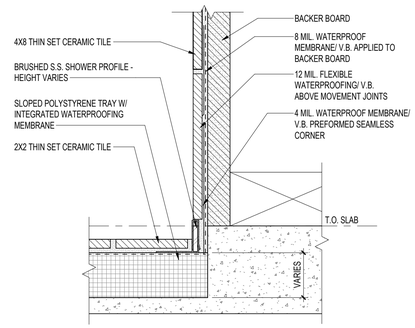

10 SHOWER ENCLOSURE TO WALL

Scale: 6" = 1'-0"

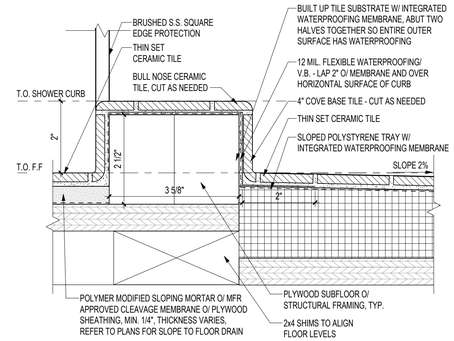

6 SHOWER ENCLOSURE SECTION

Scale: 6" = 1'-0"

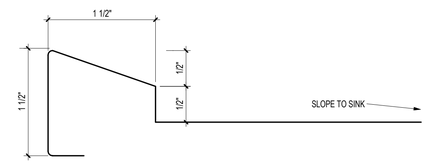

2 DECON SINK LIP PROFILE

Scale: 12" = 1'-0"

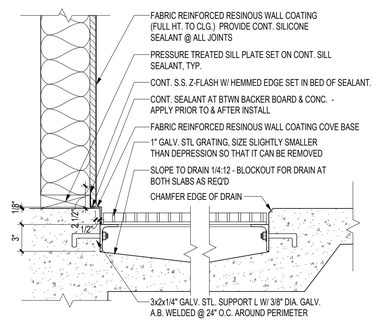

11 FLOOR GRATE/CONC. BASIN SECTION AT FRWC

Scale: 1 1/2" = 1'-0"

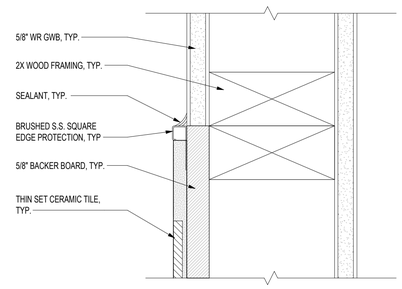

7 TOP OF TILE WAINSCOT

Scale: 6" = 1'-0"

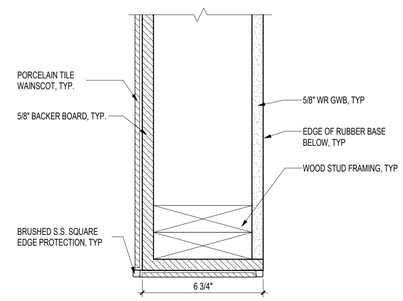

3 PORCELAIN TILE @ WAINSCOT END WALL (PLAN)

Scale: 3" = 1'-0"

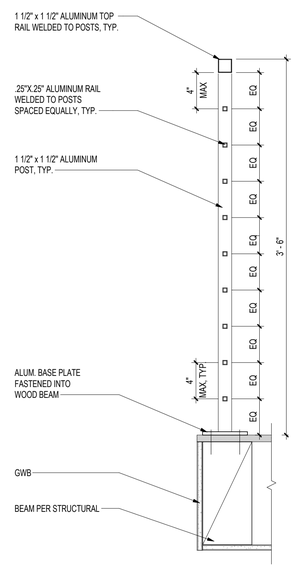

NOTE: HANDRAIL AND GUARDRAIL TO COMPLY W/ 2018 IBC AND ASCE-7, INCLUDING:
- RESISTANCE OF A LINEAR LOAD OF 50 LBS PER LINEAL FOOT (IBC 1607.8.1)
- RESISTANCE OF CONCENTRATED LOADS OF 200 LBS (IBC 1607.8.1.1)
- RESISTANCE AT INTERMEDIATE RAILS OF CONCENTRATED LOAD OF 50 LBS (IBC 1607.8.1.2)

16 ATTIC HATCH GUARDRAIL

Scale: 1 1/2" = 1'-0"

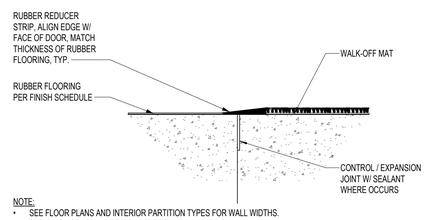

NOTE:
- SEE FLOOR PLANS AND INTERIOR PARTITION TYPES FOR WALL WIDTHS.
- SEE FINISH SCHEDULE FOR GWB TYPES AND WALL FINISH.
- REFER TO FLOOR PLANS & ENLARGED PLANS FOR WALL TYPES & A8.1 FOR WALL TYPE CONSTRUCTION NOTES & DIMS.

12 WALK-OFF MAT TO RUBBER FLOOR

Scale: 3" = 1'-0"

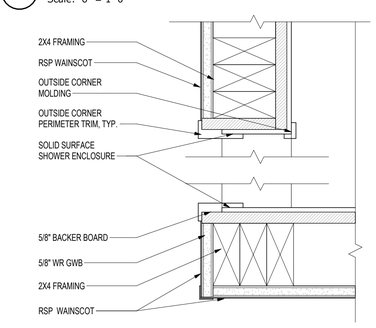

8 SHOWER ENCLOSURE END WALLS - RSP WAINSCOT

Scale: 3" = 1'-0"

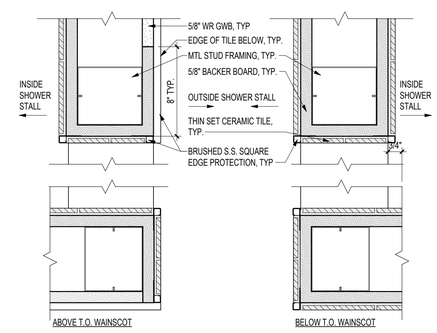

4 SHOWER END WALLS - CERAMIC TILE WAINSCOT

Scale: 3" = 1'-0"

TCA
ARCHITECTURE + PLANNING + DESIGN
6211 ROOSEVELT WAY NORTHEAST
SEATTLE, WA 98115
tel: (206) 522-3830
fax: (206) 522-2456
6235 REGISTERED ARCHITECT
BRIAN J. HARRIS
STATE OF WASHINGTON
11/14/2023
EXPIRES: 03/03/2024

BID SET

No.	Description	Date:
2	ADDENDUM 2	12/07/23

Project Title:

FIRE STATION 26 RENOVATION

CITY OF KIRKLAND
9930 124TH AVE NE KIRKLAND, WA 98033

Sheet Title:

INTERIOR DETAILS

Scale: As indicated
Project No. : 22-27-26
Date : 11/14/2023
Sheet Number : 2 A8.3

Autodesk Docs://22-27-26 Kirkland FS 26/22-27-26_Kirkland FS26_Arch_R23_BID.rvt

DOOR SCHEDULE

	DOOR									FRAME				DETAILS				HARDWARE
MARK	WIDTH	HEIGHT	THICKNESS	TYPE	MATERIAL	FINISH	GLAZING	LABEL	CLOSER	TYPE	MATERIAL	FINISH	GLAZING	HEAD	JAMB	THRESH	REMARKS	SET
100A	3' - 0"	7' - 0"	1 3/4"	A	EXIST	EXIST	-		NO	1	EXIST	EXIST		EXIST	EXIST	EXIST	1	2
102A	3' - 0"	7' - 0"	1 3/4"	A	EXIST	EXIST	-		NO	1	EXIST	EXIST						1
103A	3' - 0"	7' - 0"	1 3/4"		WD	SV	T		NO		HM	PAINT	-					1
103B	3' - 0"	7' - 0"	1 3/4"	EXIST	EXIST	EXIST	EXIST		NO	EXIST	EXIST	EXIST	-	EXIST	EXIST	EXIST	1	3
103C	3' - 0"	7' - 0"	1 3/4"	A	HM	PAINT	-		NO	1	HM	PAINT						1
103D	3' - 0"	7' - 0"	1 3/4"	A	HM	PAINT	-		NO	1	HM	PAINT						1
104A	2' - 11"	6' - 10"		EXIST	EXIST	EXIST	EXIST		YES	EXIST	EXIST	-		EXIST	EXIST	EXIST	1	1
105A	3' - 0"	7' - 0"	1 3/4"	A	WD	SV	-		NO	1	HM	PAINT		3/A9.2	11/9.2	4/A9.1	2, 7	6
106A	3' - 0"	7' - 0"	1 3/4"	A	WD	SV	-		NO	1	HM	PAINT		3/A9.2	11/9.2	4/A9.1	2, 7	6
107A	3' - 0"	7' - 0"	1 3/4"	A	WD	SV	-		NO	1	HM	PAINT		3/A9.2	7/A9.2	-		18
110A	3' - 0"	7' - 0"	1 3/4"	EXIST	EXIST	PAINT	-		NO	EXIST	-	PAINT		EXIST	EXIST	EXIST	1	4
200A	3' - 0"	7' - 0"	1 3/4"	C	SF	FAC	T/I	-	YES	S1	SF	FAC	T/I	5/A4.3	6/A4.3	8/A4.3		12
200B	3' - 0"	7' - 0"	1 3/4"	EXIST	EXIST	EXIST	EXIST		YES	EXIST	EXIST	EXIST	-	EXIST	EXIST			1
201A	14' - 0"	14' - 0"	2"	EXIST	EXIST	FAC	EXIST	-	NO	-	-	-		EXIST	EXIST	EXIST	13	1
201B	14' - 0"	14' - 0"	2"	EXIST	EXIST	FAC	EXIST	-	NO	-	-	-		EXIST	EXIST	EXIST	13	1
201C	14' - 0"	14' - 0"	2"	EXIST	EXIST	FAC	EXIST	-	NO	-	-	-		EXIST	EXIST	EXIST	13	1
201D	12' - 0"	14' - 0"	2"	EXIST	EXIST	FAC	EXIST	-	NO	-	-	-		EXIST	EXIST	EXIST	13	1
201E	3' - 0"	7' - 0"	1 3/4"	C	HM	PAINT	T/I		YES	1	HM	PAINT		13/A4.3	14/A4.3	15/A4.3		7
201F	3' - 0"	7' - 0"	1 3/4"	C	HM	PAINT	T/I		NO	1	HM	PAINT					14	17
204A	3' - 0"	7' - 0"	1 3/4"	A	HM	PAINT	-		YES	1	HM	PAINT		13/A4.3	14/A4.3	15/A4.3	6	11
204B	3' - 0"	7' - 0"	1 3/4"	B	HM	PAINT	T		YES	1	HM	PAINT		3/A9.2	7/A9.2	16/A9.2	6	13A
205A	3' - 0"	7' - 0"	1 3/4"	B	HM	PAINT	T		YES	1	HM	PAINT		3/A9.2	7/A9.2	16/A9.2	6	13B
206A	3' - 0"	7' - 0"	1 3/4"	A	HM	PAINT	-		NO	1	HM	PAINT		13/A4.3	14/A4.3	15/A4.3		8
207A	3' - 0"	7' - 0"	1 3/4"	C	HM	PAINT	T/I		YES	1	HM	PAINT		13/A4.3	14/A4.3	15/A4.3		14
208A	3' - 0"	7' - 0"	1 3/4"	C	SF	FAC	T/I	-	YES	S2	SF	FAC	T/I	9/A4.3	10/A4.3	8/A4.3		12
208B	6' - 0"	8' - 0"	2 1/8"	F	STL	FAC	T/I	-	NO	-	STL	-		17/A4.3	18/A4.3	19/A4.3		15
208C	3' - 0"	7' - 0"	1 3/4"	C	HM	PAINT	T/I		YES		HM	PAINT	-	3/A9.2	7/A9.2	12/A9.2		16
300A	3' - 0"	7' - 0"	1 3/4"	A	WD	SV	-	45 MIN	YES	1	HM	PAINT		3/A9.2	7/A9.2	-	10	5
301A	3' - 0"	7' - 0"	1 3/4"	A	WD	SV	-	45 MIN	YES	1	HM	PAINT		3/A9.2	7/A9.2	-	10	5
302A	3' - 0"	7' - 0"	1 3/4"	A	WD	SV	-	45 MIN	YES	1	HM	PAINT		3/A9.2	7/A9.2	-	10	5
303A	3' - 0"	7' - 0"	1 3/4"	A	WD	SV	-	45 MIN	YES	1	HM	PAINT		3/A9.2	7/A9.2	-	10	5
304A	3' - 0"	7' - 0"	1 3/4"	A	WD	SV	-	45 MIN	YES	1	HM	PAINT		3/A9.2	7/A9.2	-	10	5
305A	3' - 0"	7' - 0"	1 3/4"	A	WD	SV	-	45 MIN	YES	1	HM	PAINT		3/A9.2	7/A9.2	-	10	5
306A	3' - 0"	7' - 0"	1 3/4"	A	WD	SV	-	45 MIN	YES	1	HM	PAINT		3/A9.2	7/A9.2	-	10	5
307A	3' - 0"	7' - 0"	1 3/4"	A	WD	SV	-	45 MIN	YES	1	HM	PAINT		3/A9.2	7/A9.2	-	10	5
308A	3' - 0"	7' - 0"	1 3/4"	A	EXIST	EXIST	-		NO	1	EXIST	EXIST		EXIST	EXIST	EXIST		1
309A	3' - 0"	7' - 0"	1 3/4"	A	EXIST	EXIST	-		NO	1	EXIST	EXIST		EXIST	EXIST	EXIST		1
310A	3' - 0"	7' - 0"	1 3/4"	A	EXIST	EXIST	-		NO	1	EXIST	EXIST		EXIST	EXIST	EXIST		1
311A	3' - 0"	7' - 0"	1 3/4"	A	WD	SV	-		NO	1	HM	PAINT		3/A9.2	11/A9.2	2/A9.1	7, 9	6
312A	3' - 0"	7' - 0"	1 3/4"	A	WD	SV	-		NO	1	HM	PAINT		3/A9.2	11/A9.2	2/A9.1	7, 9	6
313A	3' - 0"	7' - 0"	1 3/4"	A	WD	SV	-		NO	1	HM	PAINT		3/A9.2	11/A9.2	2/A9.1	7, 9	6
314A	3' - 0"	7' - 0"	1 3/4"	A	WD	SV	-		NO	1	HM	PAINT		3/A9.2	11/A9.2	2/A9.1	7, 9	6
316A	3' - 0"	7' - 0"	1 3/4"	EXIST	EXIST	EXIST	EXIST		YES	-	EXIST	PAINT		EXIST	EXIST	EXIST	1	9
316B	3' - 0"	7' - 0"	1 3/4"	EXIST	EXIST	EXIST	EXIST		YES	-	EXIST	PAINT		EXIST	EXIST	EXIST	1	9
400A	3' - 0"	7' - 0"	1 3/4"	A	EXIST	EXIST	-		NO	1	EXIST	EXIST		EXIST	EXIST	EXIST		1
401A	3' - 0"	7' - 0"	1 3/4"	A	EXIST	EXIST	-		NO	1	EXIST	EXIST						1
402A	3' - 0"	7' - 0"	1 3/4"	A	EXIST	EXIST	-		NO	1	EXIST	EXIST						1
403A	3' - 0"	7' - 0"	1 3/4"	A	EXIST	EXIST	-		NO	1	EXIST	EXIST						1
405A	6' - 0"	7' - 4"	1 3/4"	A	HM	PAINT	-			-	-	-		3/A9.2	7/A9.2	-	8	10
405B	6' - 0"	7' - 4"	1 3/4"	E	HM	PAINT	-			-	-	-		19/A9.2	15/A9.2	19/A9.2	8	10
405C	6' - 0"	7' - 4"	1 3/4"	A	HM	PAINT	-			-	-	-		3/A9.2	7/A9.2	-	8	10

GLAZING SCHEDULE

DESIGNATION	GLASS TYPE	ASSEMBLY
I	EXTERIOR DOUBLE GLAZED IGU	EXTERIOR GLASS: 1/4" LOW IRON GLASS WITH LOW-E COATING ON #2 SURFACE; ARGON FILLED AIR SPACE; INTERIOR GLASS: CLEAR
T	INTERIOR TEMPERED MONOLITHIC	1/4" CLEAR TEMPERED
T/I	EXTERIOR TEMPERED DOUBLE GLAZED IGU	EXTERIOR GLASS: 1/4" LOW IRON GLASS WITH LOW-E COATING ON #2 SURFACE; ARGON FILLED AIR SPACE; INTERIOR GLASS: CLEAR

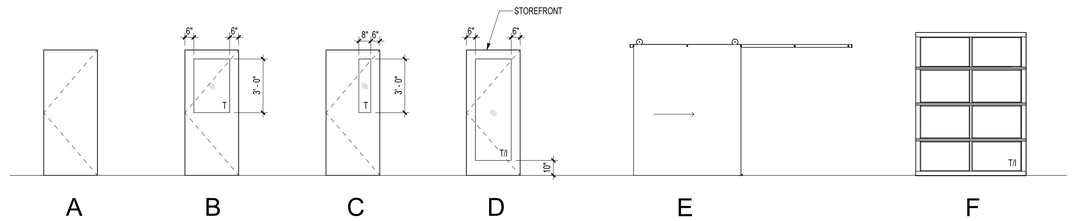

DOOR TYPES LEGEND
Scale: 1/4" = 1'-0"

DOOR SCHEDULE KEY

DOOR & FRAME DESIGNATIONS	
WD	SOLID CORE WOOD
HM	HOLLOW METAL
SF	STOREFRONT
MTL	METAL
STL	STEEL
ALUM	ALUMINUM
SV	SEALED VARNISH
FAC	FACTORY FINISH
PAINT	PAINTED

GLAZING DESIGNATIONS	
T	TEMPERED
I	INSULATED - DOUBLE GLAZED
F	FIRE RATED
TR	TRANSLUCENT
SP	SPANDREL PANEL
-	-
-	-
-	-
-	-

DOOR SCHEDULE GENERAL NOTES:
-FILL ALL FRAMES WITH MINERAL WOOL
-REFER TO PROJECT MANUAL FOR HARDWARE SPECIFICATIONS AND SCHEDULE
-SEE A3.1 FOR STOREFRONT FRAME TYPES
-SEE DOOR TYPES FOR GLASS NOTES
-ALL NEW HM DOORS AND FRAMES SHALL BE PAINTED PT-3
-ALL NEW WOOD DOORS TO BE MASONITE WHITE MAPLE (PLAIN SLICED) - NUTMEG STAIN
-VERIFY EXISTING OPENING WIDTH FOR NEW DOORS IN EXISTING OPENINGS

DOOR SCHEDULE REMARKS
1. EXISTING DOOR AND FRAME TO REMAIN
2. PROVIDE RUBBER REDUCER STRIP AT THRESHOLD
3. PAIR OF DOORS
4. INTERIOR SIDE OF OVERHEAD DOOR TO BE CLEANED. EXISTING DOOR TRACKS TO BE CLEANED.
5. REPLACE EXISTING WEATHERSEALS.
6. PROVIDE PANIC BAR(S)
7. 1" UNDERCUT AT DOOR
8. SAFETY CHAIN W/ LATCH
9. PROVIDE SLOPED METAL TILE EDGE TRANSITION AT THRESHOLD
10. PROVIDE AUTO DOOR BOTTOMS
11. EXISTING SIGNAGE ON EXISTING DOOR TO BE REMOVED. PATCH HOLES IN DOOR AFTER REMOVAL OF SIGN.
12. VERIFY EXISTING/MODIFIED WALL DEPTHS FOR NEW HM FRAMES
13. PAINT EXTERIOR, CLEAN INTERIOR
14. REMOVE EXISTING KICK PLATE AND REPLACE WITH HARDWARE AS SCHEDULED.

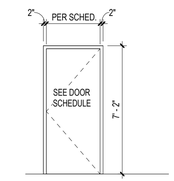

HM FRAME TYPE
Scale: 1/4" = 1'-0"

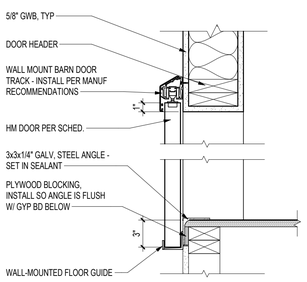

20 SLIDING DOOR HEAD/THRESHOLD
Scale: 1 1/2" = 1'-0"

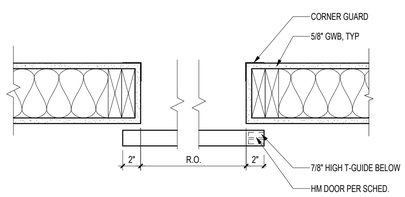

19 SLIDING DOOR JAMB
Scale: 1 1/2" = 1'-0"

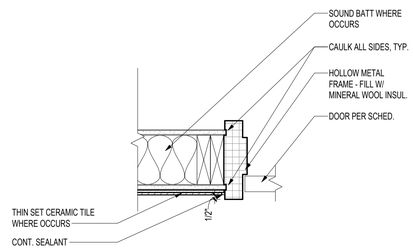

11 TYP. INT. H.M. DOOR JAMB @ TILE
Scale: 1 1/2" = 1'-0"

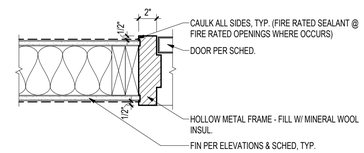

NOTE:
- SEE FLOOR PLANS AND INTERIOR PARTITION TYPES FOR WALL WIDTHS.
- SEE FINISH SCHEDULE FOR GWB TYPES AND WALL FINISH.
- REFER TO FLOOR PLANS AND ENLARGED PLANS FOR WALL TYPES & A8.1 FOR WALL TYPE CONSTRUCTION NOTES & DIMS.
- REFER TO S2.1 AND S2.2 FOR SHEAR WALL LOCATIONS.

7 TYP. INT. H.M. JAMB
Scale: 1 1/2" = 1'-0"

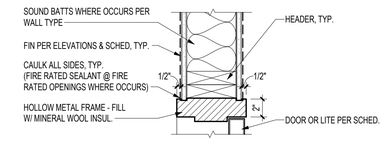

NOTE:
- SEE FLOOR PLANS AND INTERIOR PARTITION TYPES FOR WALL WIDTHS.
- SEE FINISH SCHEDULE FOR GWB TYPES AND WALL FINISH.
- REFER TO FLOOR PLANS & ENLARGED PLANS FOR WALL TYPES & A8.1 FOR WALL TYPE CONSTRUCTION NOTES & DIMS.
- REFER TO S2.1 AND S2.2 FOR SHEAR WALL LOCATIONS.

3 TYP. INT. H.M. HEAD
Scale: 1 1/2" = 1'-0"

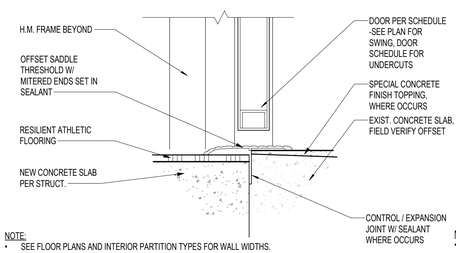

NOTE:
- SEE FLOOR PLANS AND INTERIOR PARTITION TYPES FOR WALL WIDTHS.
- SEE FINISH SCHEDULE FOR GWB TYPES AND WALL FINISH.
- REFER TO FLOOR PLANS & ENLARGED PLANS FOR WALL TYPES & A8.1 FOR WALL TYPE CONSTRUCTION NOTES & DIMS.

16 INT. H.M. THRESHOLD - APP BAY TRANSITION TO GYM
Scale: 3" = 1'-0"

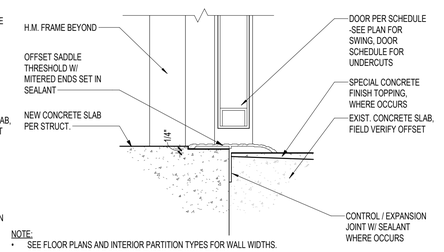

NOTE:
- SEE FLOOR PLANS AND INTERIOR PARTITION TYPES FOR WALL WIDTHS.
- SEE FINISH SCHEDULE FOR GWB TYPES AND WALL FINISH.
- REFER TO FLOOR PLANS & ENLARGED PLANS FOR WALL TYPES & A8.1 FOR WALL TYPE CONSTRUCTION NOTES & DIMS.

12 INT. H.M. THRESHOLD - APP BAY TRANSITION
Scale: 3" = 1'-0"

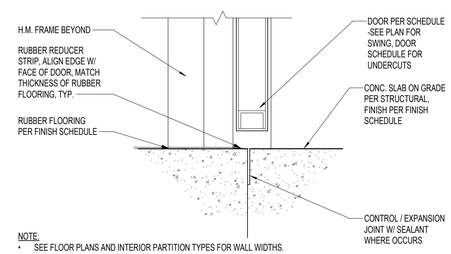

NOTE:
- SEE FLOOR PLANS AND INTERIOR PARTITION TYPES FOR WALL WIDTHS.
- SEE FINISH SCHEDULE FOR GWB TYPES AND WALL FINISH.
- REFER TO FLOOR PLANS & ENLARGED PLANS FOR WALL TYPES & A8.1 FOR WALL TYPE CONSTRUCTION NOTES & DIMS.

8 TYP. INT. H.M. THRESHOLD - RUBBER TO CONCRETE
Scale: 3" = 1'-0"

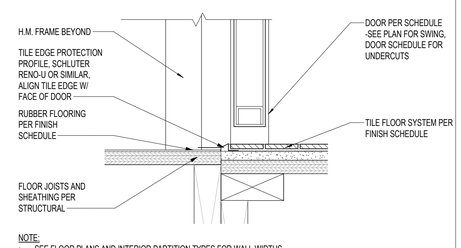

NOTE:
- SEE FLOOR PLANS AND INTERIOR PARTITION TYPES FOR WALL WIDTHS.
- SEE FINISH SCHEDULE FOR GWB TYPES AND WALL FINISH.
- REFER TO FLOOR PLANS & ENLARGED PLANS FOR WALL TYPES & A8.1 FOR WALL TYPE CONSTRUCTION NOTES & DIMS.

4 TYP. INT. H.M. THRESHOLD - RUBBER TO TILE
Scale: 3" = 1'-0"

TCA ARCHITECTURE + PLANNING + DESIGN
6211 ROOSEVELT WAY NORTHEAST
SEATTLE, WA 98115
tel: (206) 522-3830
fax: (206) 522-2456
6235 REGISTERED ARCHITECT
BRIAN J. HARRIS STATE OF WASHINGTON
11/14/2023
EXPIRES: 03/03/2024

BID SET

No.	Description	Date:
2	ADDENDUM 2	12/07/23

Project Title:
FIRE STATION 26 RENOVATION
CITY OF KIRKLAND
9930 124TH AVE NE KIRKLAND, WA 98033

Sheet Title:
DOOR SCHEDULE

Scale: As indicated
Project No. : 22-27-26
Date : 11/14/2023
Sheet Number : 2
A9.2

Autodesk Docs://22-27-26 Kirkland FS 26/22-27-26_Kirkland FS26_Arch_R23_BID.rvt

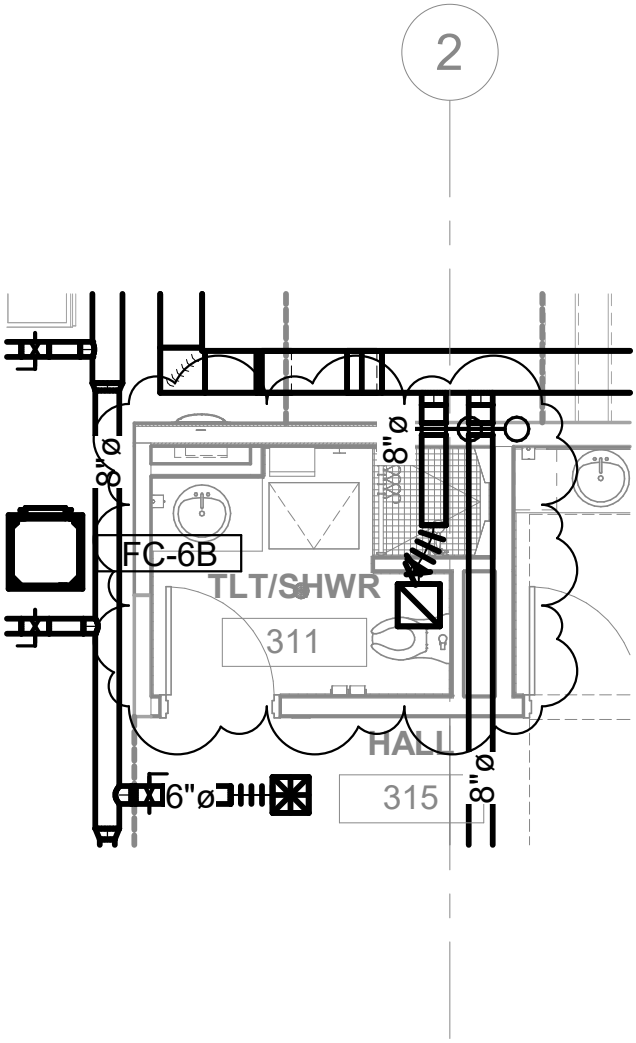

1 THIRD & FOURTH LEVELS
3/16" = 1'-0"

SIDER + BYERS
MECHANICAL ENGINEERS

192 Nickerson, Suite #300
Seattle, Washington 98109
Phone: 206.285.2966
Fax: 206.285.1045

FIRE STATION 26 RENOVATION

Project number	22036	MSK-1
Date	12/7/23	
Reference Sheet	M2.2	Scale 3/16" = 1'-0"

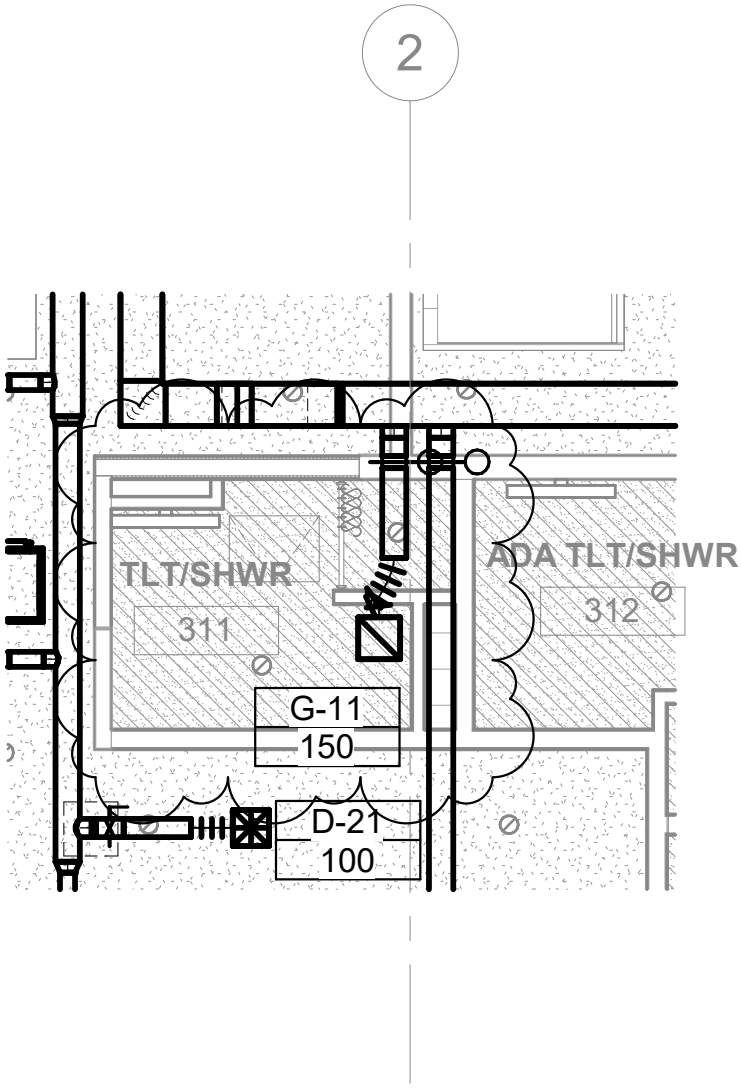

1 THIRD & FOURTH LEVELS CEILING PLAN
3/16" = 1'-0"

SIDER + BYERS
MECHANICAL ENGINEERS

192 Nickerson, Suite #300
Seattle, Washington 98109
Phone: 206.285.2966
Fax: 206.285.1045

FIRE STATION 26 RENOVATION

Project number	22036	MSK-2
Date	12/7/23	
Reference Sheet	M2.5	Scale 3/16" = 1'-0"

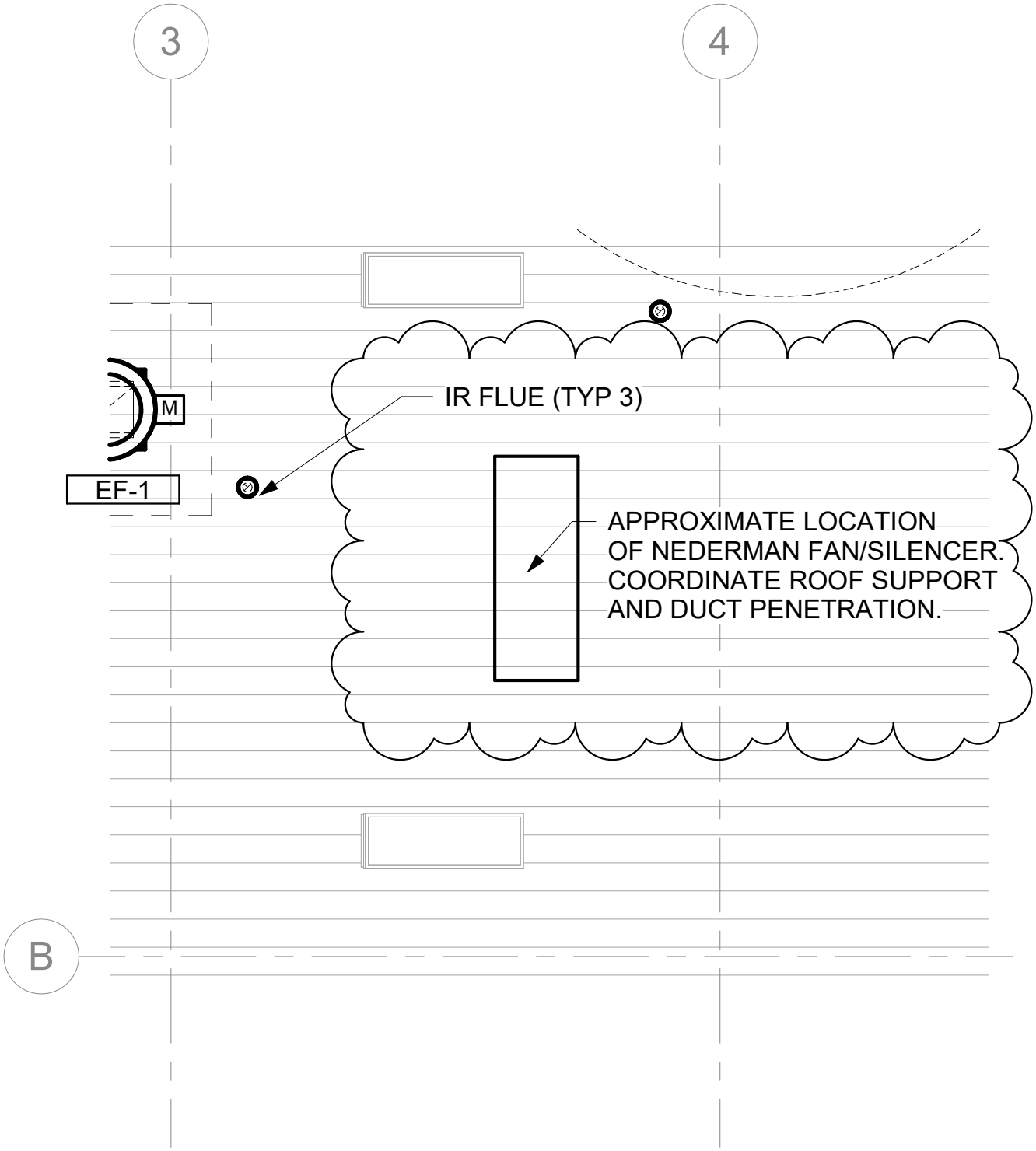

1 ROOF PLAN
3/16" = 1'-0"

SIDER + BYERS
MECHANICAL ENGINEERS

192 Nickerson, Suite #300
Seattle, Washington 98109
Phone: 206.285.2966
Fax: 206.285.1045

FIRE STATION 26 RENOVATION

Project number	22036	MSK-3
Date	12/7/23	
Reference Sheet	M2.3	Scale 3/16" = 1'-0"

GENERAL NOTES

1. CIRCUIT NUMBERS SHOWN REFER TO PANEL P2 UNLESS NOTED OTHERWISE.
2. COORDINATE ALL CEILING MOUNTED DEVICE LOCATIONS WITH ARCHITECTURAL CEILING PLANS. WHERE CONFLICT OCCURS, ARCHITECTURAL R.C.P. TAKES PRECEDENT EXCEPT WHEN LOCATION IS MODIFIED BY CODE AUTHORITY.
3. FOR BRANCH CIRCUITS THAT EXCEED 75' IN LENGTH, INCREASE WIRE BY ONE AWG SIZE.
4. PROVIDE DEDICATED NEUTRAL CONDUCTOR FOR ALL PANEL BRANCH CIRCUITS.
5. PROVIDE ALL CONDUIT, BOXES AND WIRE AS REQUIRED BY WAC, NEC, AND SPECIFICATIONS SECTIONS 26 05 00, 26 05 11, 26 05 19, 26 05 32 AND 26 05 33 FOR A FULLY FUNCTIONING SYSTEM.

FLAG NOTES

1. COORDINATE FIXTURE LOCATIONS IN APPARATUS BAYS WITH MECHANICAL IR HEATERS PRIOR TO ROUGH IN. FIXTURES SHALL BE SURFACE MOUNTED.
2. FIXTURES SHOWN IN MECHANICAL SPACES ARE DIAGRAMMATIC. ADJUST FIXTURE LOCATIONS AS REQUIRED TO AVOID CONFLICTS WITH MECHANICAL SYSTEMS.
3. INSTALL FIXTURE CENTERLINE IN LINE WITH MECHANICAL FAN COIL AND DIFFUSER.
4. PROGRAM LIGHTING ZONE CONTROLLING STEP LIGHTS TO BE ON DUSK TO DAWN AND ~~OFF DURING DAYLIGHT HOURS.~~
5. CHAIN HANG FIXTURES IN ATTIC 6" BELOW INSULATION SCRIM TO BOTTOM OF FIXTURE. ANCHOR TO STRUCTURE ABOVE SCRIM SURFACE.

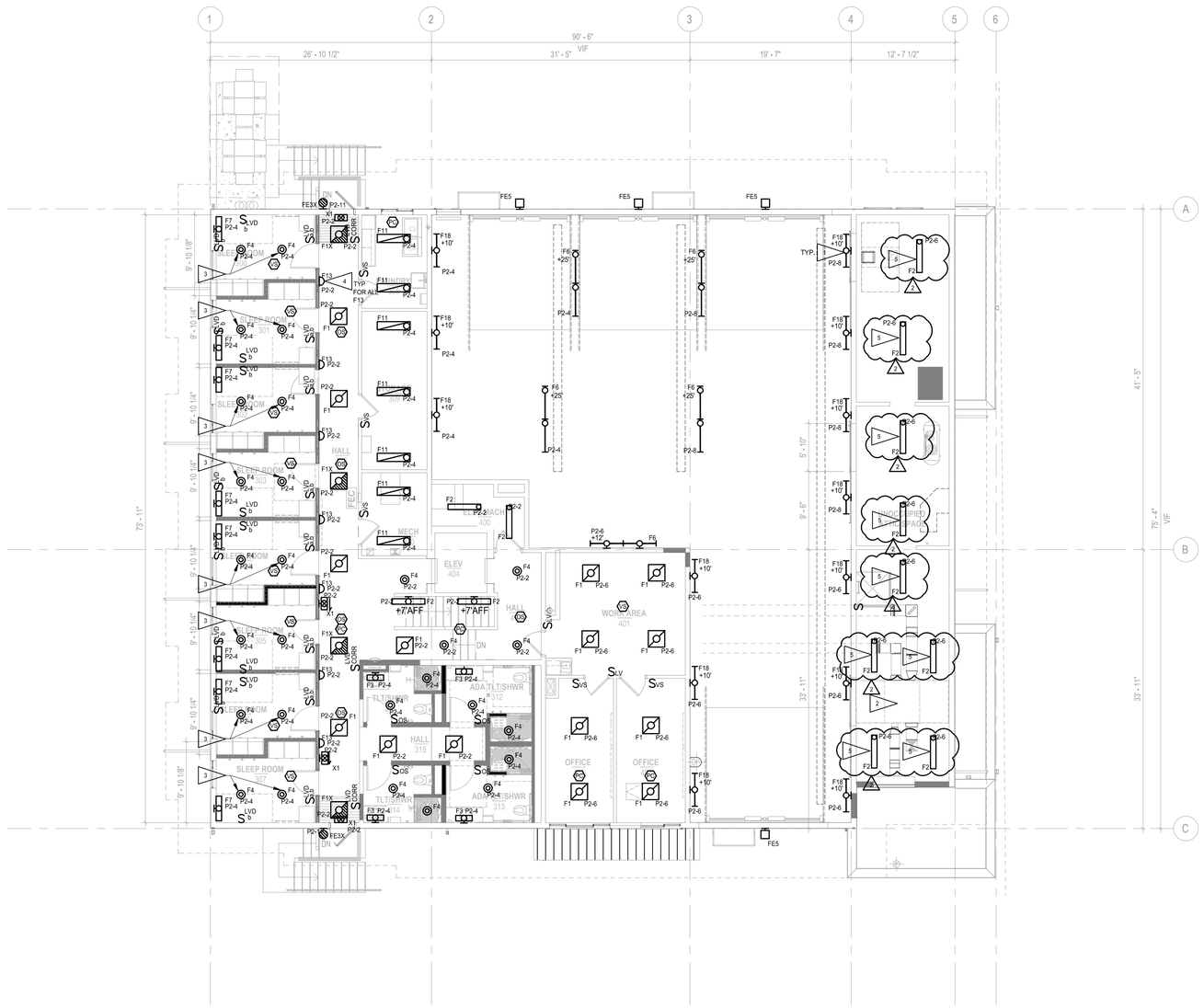

3RD & 4TH FLOOR LIGHTING FLOOR PLAN
SCALE: 1/8" = 1'0"

TCA
ARCHITECTURE + PLANNING + DESIGN
6211 ROOSEVELT WAY NORTHEAST
SEATTLE, WA 98115
tel: (206) 522-3830
fax: (206) 522-2456

CASE ENGINEERING
ELECTRICAL | LIGHTING | TELECOM | SECURITY
19515 North Creek Parkway, Suite 302
Bothell, WA 98011
425-402-9400 office@caseeng.com

MICHAEL S. CASE
STATE OF WASHINGTON
33273
REGISTERED
PROFESSIONAL ENGINEER

12/07/2023

BID SET

No.	Description	Date:
1	ADDENDUM 1	12/01/23
2	ADDENDUM 2	12/07/23

Project Title:

FIRE STATION 26 RENOVATION
CITY OF KIRKLAND
9930 124TH AVE NE KIRKLAND, WA 98033

Sheet Title:

3RD & 4TH FLOOR LIGHTING FLOOR PLAN

Scale: NOTED
Project No. : 22-27-26
Date : 12/07/2023

Sheet Number :

E3.2

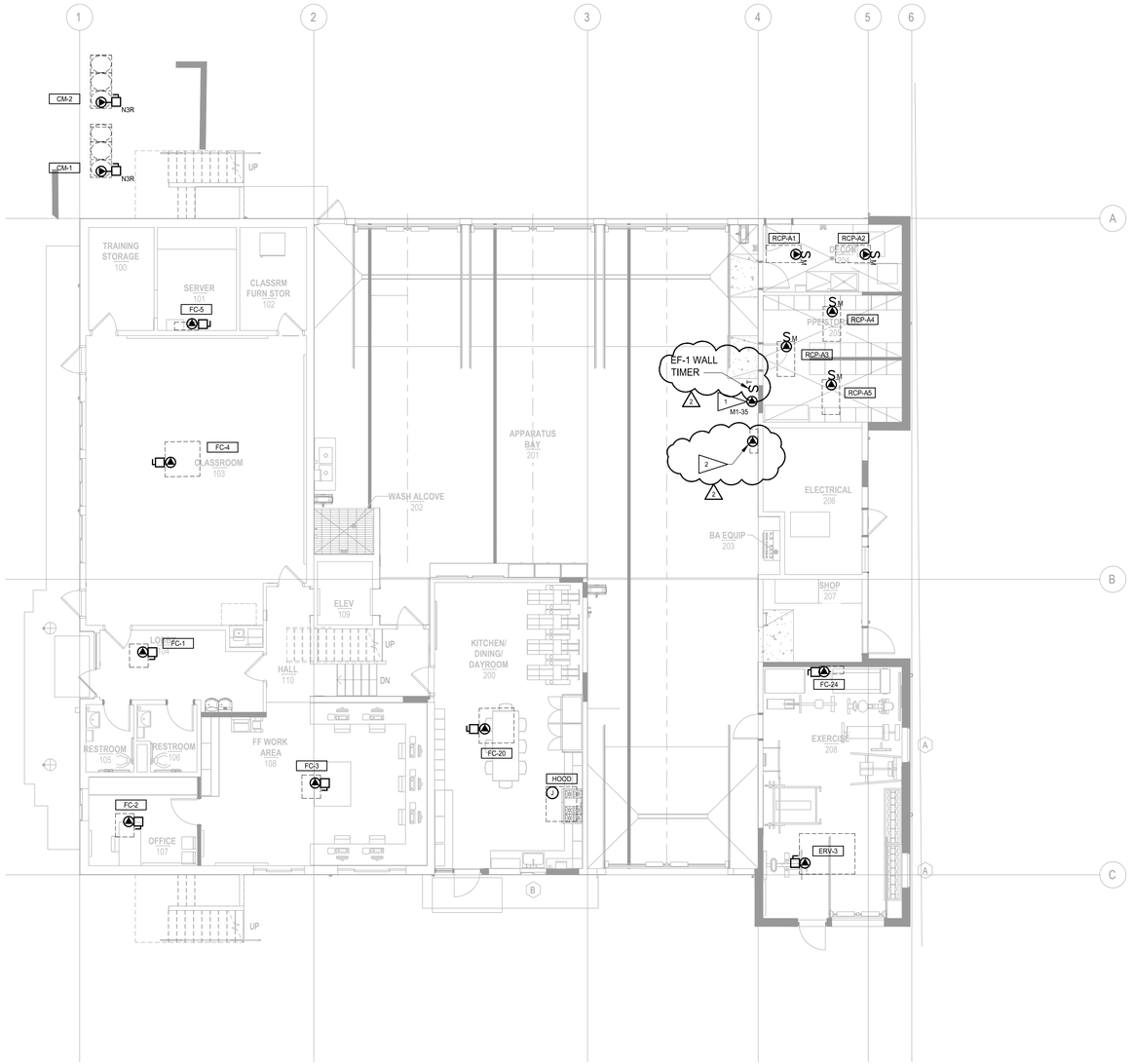

1 E3.1 1ST & 2ND FLOOR MECHANICAL POWER FLOOR PLAN

SCALE: 1/8" = 1'0"

GENERAL NOTES

1. INSTALL ALL DEVICE BOXES PRIOR TO INSTALLATION OF CONDUIT. SCHEDULE WALK-THROUGH WITH ARCHITECT AND OWNER PRIOR TO INSTALLATION OF ANY CONDUIT.
2. COORDINATE ALL CEILING MOUNTED DEVICE LOCATIONS WITH ARCHITECTURAL CEILING PLANS. WHERE CONFLICT OCCURS, ARCHITECTURAL R.C.P. TAKES PRECEDENT EXCEPT WHEN LOCATION IS MODIFIED BY CODE AUTHORITY.
3. FOR BRANCH CIRCUITS THAT EXCEED 75' IN LENGTH, INCREASE WIRE BY ONE AWG SIZE.
4. PROVIDE DEDICATED NEUTRAL CONDUCTOR FOR EACH BRANCH CIRCUIT.
5. HOMERUNS SHALL NOT BE COMBINED ON MECHANICAL EQUIPMENT.
6. PROVIDE ALL CONDUIT, BOXES AND WIRE AS REQUIRED BY WAC, NEC, AND SPECIFICATIONS SECTIONS 26 05 00, 26 05 11, 26 05 19, 26 05 32 AND 26 05 33 FOR A FULLY FUNCTIONING SYSTEM.
7. SEE MECHANICAL EQUIPMENT CONNECTION SCHEDULE, SHEET E0.3 FOR ADDITIONAL INFORMATION.

FLAG NOTES

1. CO/NO2 SENSOR. SEE DETAIL 4, SHEET E8.2 FOR ADDITIONAL INFORMATION.
2. NEDERMAN CONTROL PANEL. VERIFY EXACT LOCATION PRIOR TO ROUGH-IN WITH SYSTEM BIDDER/DESIGNER. SEE DETAIL 2, SHEET E8.2 FOR ADDITIONAL REQUIREMENTS.

TCA
ARCHITECTURE + PLANNING + DESIGN
6211 ROOSEVELT WAY NORTHEAST
SEATTLE, WA 98115
tel: (206) 522-3830
fax: (206) 522-2456

CASE ENGINEERING
ELECTRICAL | LIGHTING | TELECOM | SECURITY
19515 North Creek Parkway, Suite 302
Bothell, WA 98011
425-402-9400 office@caseeng.com

MICHAEL S. CASE
STATE OF WASHINGTON
33273
REGISTERED
PROFESSIONAL ENGINEER

12/07/2023

BID SET

No.	Description	Date:
1	ADDENDUM 1	12/01/23
2	ADDENDUM 2	12/07/23

Project Title:

FIRE STATION 26 RENOVATION

CITY OF KIRKLAND

9930 124TH AVE NE KIRKLAND, WA 98033

Sheet Title:

1ST AND 2ND FLOOR MECHANICAL POWER PLAN

Scale: NOTED

Project No. : 22-27-26

Date : 12/07/2023

Sheet Number :

E4.1

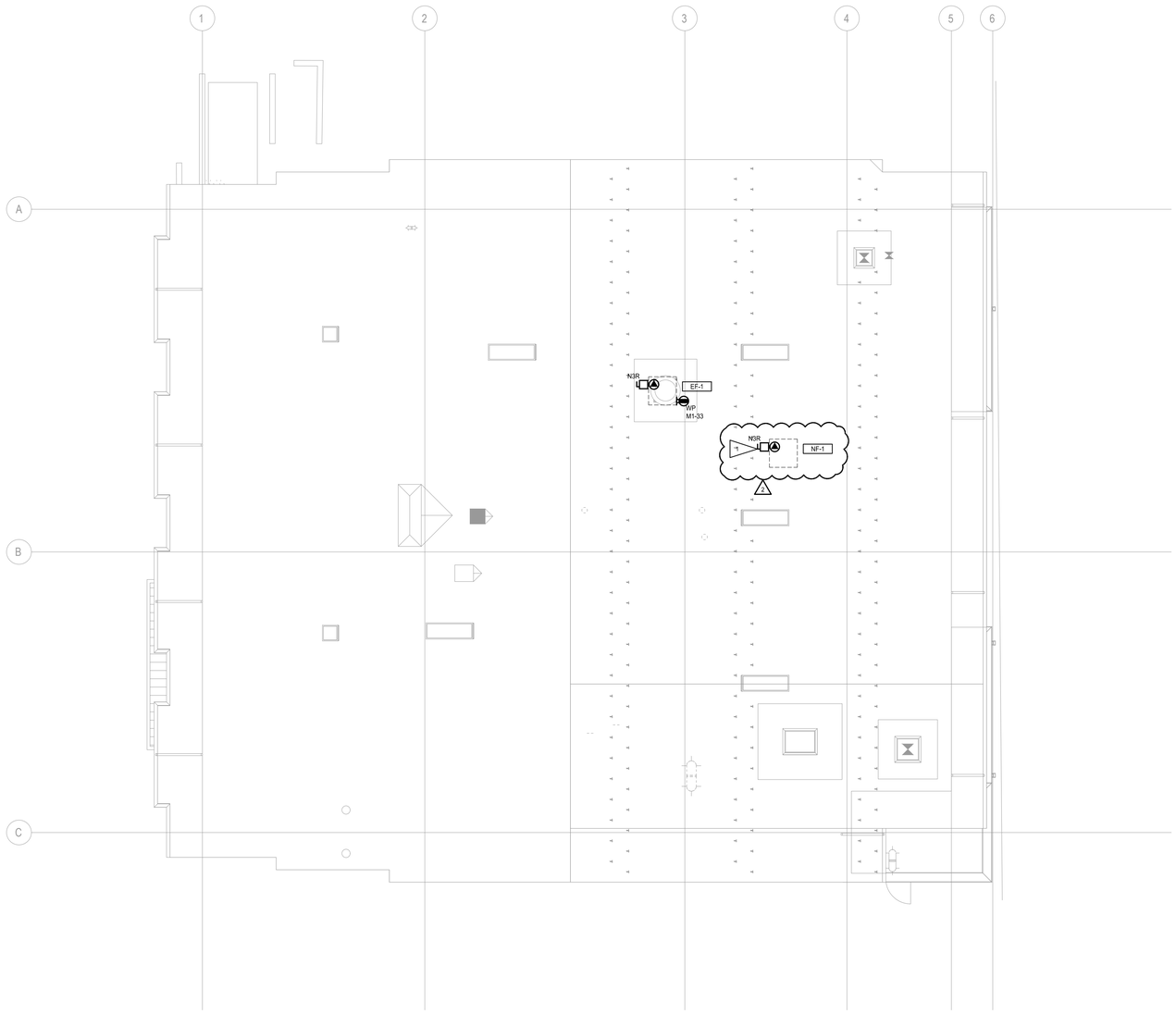

ROOF MECHANICAL POWER FLOOR PLA

1 E4.3

SCALE: 1/8" = 1'0"

GENERAL NOTES

1. INSTALL ALL DEVICE BOXES PRIOR TO INSTALLATION OF CONDUIT. SCHEDULE WALK-THROUGH WITH ARCHITECT AND OWNER PRIOR TO INSTALLATION OF ANY CONDUIT.
2. COORDINATE ALL CEILING MOUNTED DEVICE LOCATIONS WITH ARCHITECTURAL CEILING PLANS. WHERE CONFLICT OCCURS, ARCHITECTURAL R.C.P. TAKES PRECEDENT EXCEPT WHEN LOCATION IS MODIFIED BY CODE AUTHORITY.
3. FOR BRANCH CIRCUITS THAT EXCEED 75' IN LENGTH, INCREASE WIRE BY ONE AWG SIZE.
4. PROVIDE DEDICATED NEUTRAL CONDUCTOR FOR EACH BRANCH CIRCUIT.
5. HOMERUNS SHALL NOT BE COMBINED ON MECHANICAL EQUIPMENT.
6. PROVIDE ALL CONDUIT, BOXES AND WIRE AS REQUIRED BY WAC, NEC, AND SPECIFICATIONS SECTIONS 26 05 00, 26 05 11, 26 05 19, 26 05 32 AND 26 05 33 FOR A FULLY FUNCTIONING SYSTEM.
7. SEE MECHANICAL EQUIPMENT CONNECTION SCHEDULE, SHEET E0.3 FOR ADDITIONAL INFORMATION.

FLAG NOTES

1. PROVIDE POWER, CIRCUIT, AND DISCONNECTING MEANS FOR BIDDER-DESIGNED SOURCE CAPTURE EXHAUST SYSTEM. COORDINATE ALL REQUIREMENTS WITH SYSTEM BIDDER DESIGNER AND PROVIDE. SEE DETAIL 2, SHEET E8.2 FOR ADDITIONAL INFORMATION

TCA

ARCHITECTURE + PLANNING + DESIGN

6211 ROOSEVELT WAY
NORTHEAST
SEATTLE, WA 98115
tel: (206) 522-3830
fax: (206) 522-2456

CASE ENGINEERING

ELECTRICAL | LIGHTING | TELECOM | SECURITY

19515 North Creek Parkway, Suite 302
Bothell, WA 98011
425-402-9400 office@caseeng.com

MICHAEL S. CASE
STATE OF WASHINGTON
33273
REGISTERED
PROFESSIONAL ENGINEER

12/07/2023

BID SET

No.	Description	Date:
1	ADDENDUM 1	12/01/23
2	ADDENDUM 2	12/07/23

Project Title:

FIRE STATION 26 RENOVATION

CITY OF KIRKLAND

9930 124TH AVE NE KIRKLAND, WA 98033

Sheet Title:

ROOF MECHANICAL POWER PLAN

Scale: NOTED

Project No. : 22-27-26

Date : 12/07/2023

Sheet Number :

E4.3

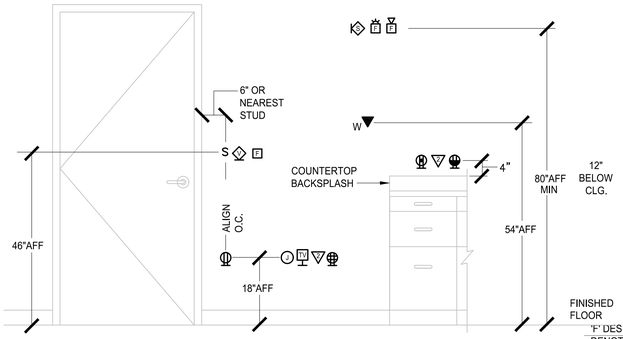

GENERAL NOTES

1. MOUNTING HEIGHTS ARE TO THE CENTER OF THE DEVICE AS SHOWN UNLESS OTHERWISE NOTED ON PLANS.
2. VERIFY ALL MOUNTING HEIGHTS WITH ARCHITECT PRIOR TO ROUGH-IN.
3. ALIGN OUTLETS VERTICALLY WHERE POSSIBLE.
4. MOUNTING HEIGHTS SHOWN ON DETAIL SUPERCEDE THOSE SHOWN ON PLANS. NOTIFY ARCHITECT, IMMEDIATELY, OF ANY CONFLICTS.
5. FOR ANY DEVICE MOUNTING LOCATION THAT CONFLICTS WITH A MIRROR, GENERAL CONTRACTOR SHALL COORDINATE DEVICE LOCATION WITH ARCHITECT PRIOR TO ROUGH IN.
6. PROVIDE STAINLESS STEEL COVERPLATES IN ALL APPARATUS BAYS, WORK AREAS AND KITCHEN.

1 E8.2 DETAIL - TYPICAL MOUNTING HEIGHTS
SCALE: NONE

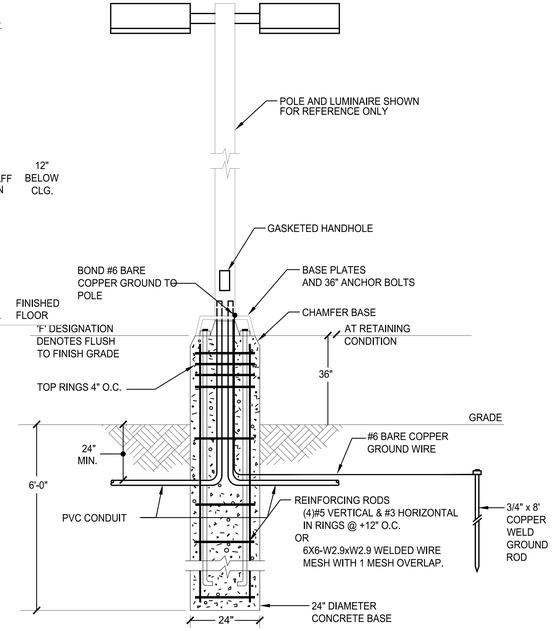

2 E8.2 DETAIL - LIGHT POLE BASE
SCALE: NONE

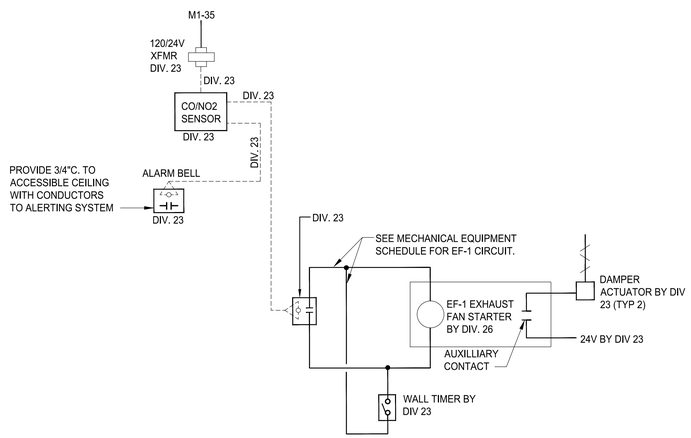

4 E8.2 DETAIL - CO/NO2 SENSOR DETAIL
SCALE: NONE

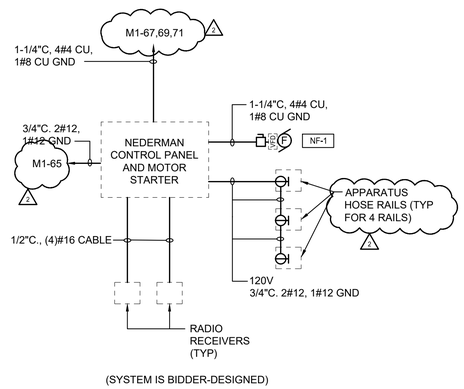

5 E8.2 DETAIL - NEDERMAN CONTROL PANEL DETAIL
SCALE: NONE

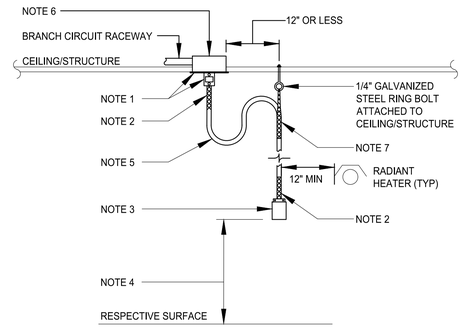

DETAIL NOTES

1. PROVIDE J-BOX WITH TWIST LOCK RECEPTACLE AND PLUG AS INDICATED ON DRAWINGS.
2. PROVIDE STRAIN RELIEF GRIP. COORDINATE TYPE WITH CABLE SIZE.
3. SEE FLAG NOTE 5, SHEET E2.1
4. INSTALL DROP CORD AT HEIGHT AS DIRECTED BY A/E OR OWNER.
5. PROVIDE TYPE "SOOW" CORD CONDUCTORS TO MATCH CIRCUITING SHOWN ON DRAWINGS. SEE POWER FLOOR PLAN SHEETS FOR ADDITIONAL INFORMATION. INSTALL CORD WITH 12" DRIP LOOP PRIOR TO HANGING FROM RING BOLT TO ALLOW RECESSED MOUNTING.
6. PROVIDE J-BOX, RECEPTACLE AND RACEWAY AS INDICATED ON DRAWINGS FOR DROP CORD CONNECTION. SEE POWER FLOOR PLAN SHEETS FOR ADDITIONAL INFORMATION. PROVIDE SURFACE MOUNTED BOX AND SURFACE RACEWAY WHERE CEILING STRUCTURE DOES NOT ALLOW RECESSED MOUNTING.
7. PROVIDE WIRE MESH SUPPORT GRIP. COORDINATE WITH CABLE SIZE.

3 E8.2 DETAIL - APPARATUS BAY DROP CORD
SCALE: NONE

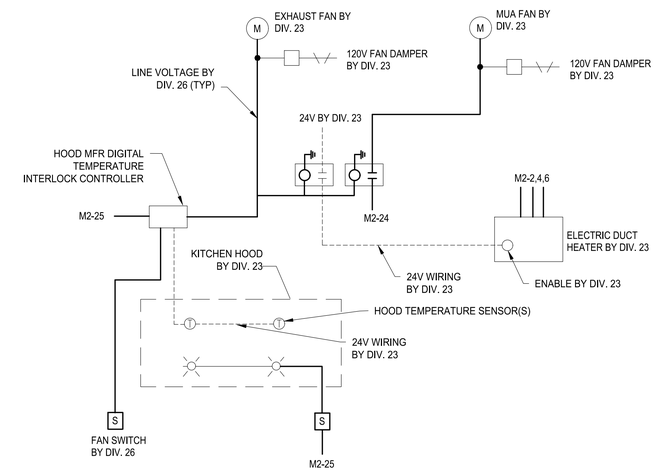

6 E8.2 DETAIL - KITCHEN HOOD INTERLOCK DETAIL
SCALE: NONE

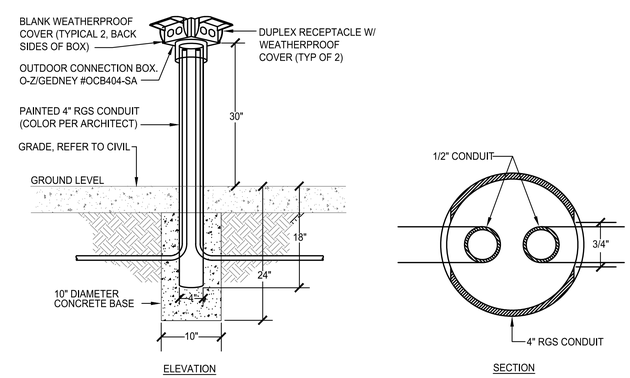

7 E8.2 DETAIL - POWER BOLLARD
SCALE: NONE

TCA
ARCHITECTURE + PLANNING + DESIGN
6211 ROOSEVELT WAY NORTHEAST
SEATTLE, WA 98115
tel: (206) 522-3830
fax: (206) 522-2456

CASE ENGINEERING
ELECTRICAL | LIGHTING | TELECOM | SECURITY
19515 North Creek Parkway, Suite 302
Bothell, WA 98011
425-402-9400 office@caseeng.com

MICHAEL S. CASE — STATE OF WASHINGTON — 33273 — REGISTERED PROFESSIONAL ENGINEER

12/07/2023

BID SET

No.	Description	Date:
1	ADDENDUM 1	12/01/23
2	ADDENDUM 2	12/07/23

Project Title:

FIRE STATION 26 RENOVATION
CITY OF KIRKLAND
9930 124TH AVE NE KIRKLAND, WA 98033

Sheet Title:

ELECTRICAL DETAILS

Scale: NOTED
Project No. : 22-27-26
Date : 12/07/2023

Sheet Number :

E8.2

FEEDER SCHEDULE

TAG	COPPER CONDUCTORS				
	QUANTITY OF SETS	RACEWAY SIZE	CONDUCTORS		
			PHASE	NEUTRAL	GROUND
30N	1	3/4"	3#10	1#10	1#10
60N	1	1"	3#6	1#6	1#10
150N	1	2"	3#1/0	1#1/0	1#6
225N	1	2-1/2"	3#4/0	1#4/0	1#4
400N	2	2-1/2"	3#3/0	1#3/0	1#3
800S	3	3"	3#300kcmil	1#300kcmil	
800N	3	3"	3#300kcmil	1#300kcmil	1#3/0
800G	3	3"	3#300kcmil	1#300kcmil	1#3/0

NOTES:

1. COPPER FEEDERS ARE BASED ON COPPER CONDUCTORS WITH THHN/THWN INSULATION. CONDUCTOR DERATING IS BASED ON THHN/THWN CONDUCTORS WITH 75 DEGREES C RATING. ALUMINUM FEEDERS ARE BASED ON ALUMINUM CONDUCTORS WITH THHN/THWN INSULATION. CONDUCTOR DERATING IS BASED ON THHN/THWN CONDUCTORS WITH 75 DEGREES C RATING.
2. REFER TO SHEET(S) E9.1 FOR FEEDER LOCATIONS.

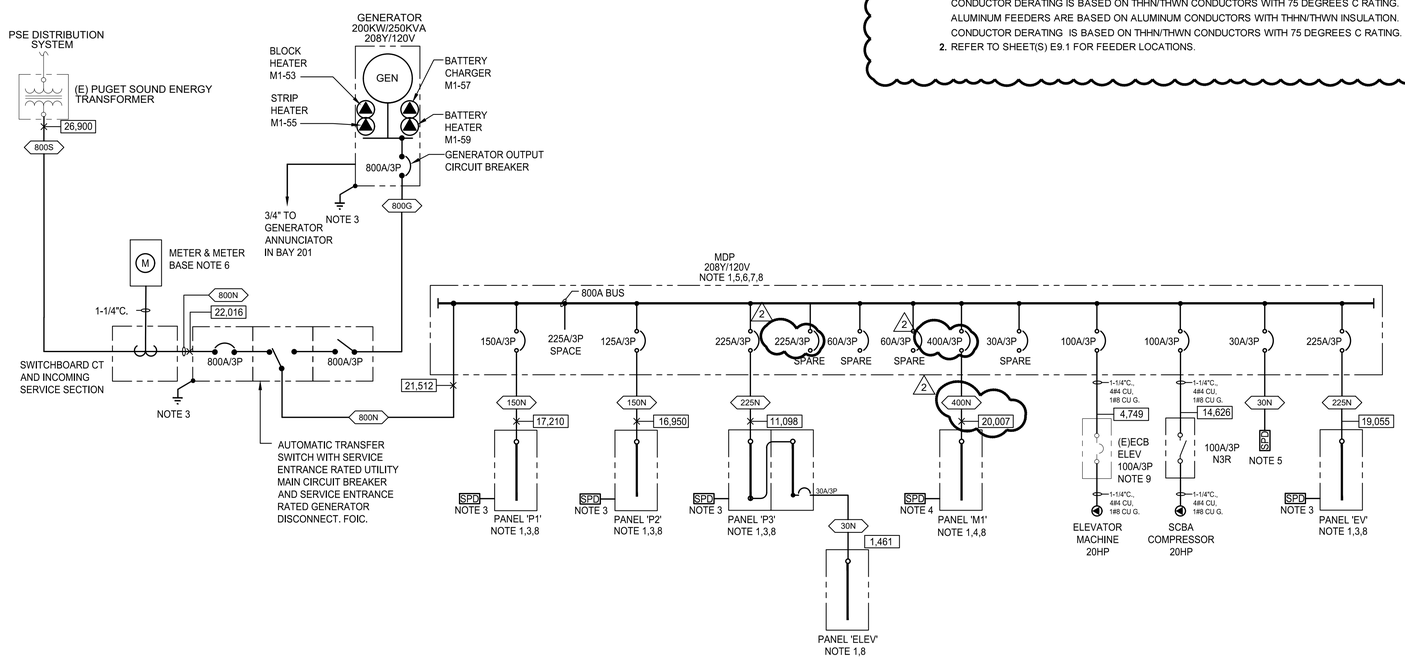

1 E9.1 ONE LINE DIAGRAM
SCALE: NONE

GENERAL NOTES:

1. SEE PANEL SCHEDULES ON E10 SERIES SHEETS FOR PANEL AND BRANCH CIRCUIT INFORMATION.
2. CONNECT ADDITIONAL SECTIONS OF MULTI-SECTION PANELS WITH CONDUCTORS SIZED THE SAME AS THE PANEL FEEDER CONDUCTORS.
3. PROVIDE INNOVATIVE TECHNOLOGIES PTE-080-3Y-101-MT SURGE SUPPRESSOR. PROVIDE SPD FOR EACH PANELBOARD AS SHOWN. (CONTACT PAMELA GOFF AT MORRIS TECHNOLOGIES, 206.930.8710 FOR INSTALLATION INSTRUCTIONS AND INSPECTION)
4. PROVIDE INNOVATIVE TECHNOLOGIES PTX-080-3Y-101-MT SURGE SUPPRESSOR. PROVIDE SPD FOR EACH PANELBOARD AS SHOWN. (CONTACT PAMELA GOFF AT MORRIS TECHNOLOGIES, 206.930.8710 FOR INSTALLATION INSTRUCTIONS AND INSPECTION)
5. PROVIDE INNOVATIVE TECHNOLOGIES PTX-160-3Y-101-MT SURGE SUPRESSOR. PROVIDE A SPD FOR EACH PANELBOARD AS SHOWN. (CONTACT PAMELA GOFF AT MORRIS TECHNOLOGIES, 206.930.8710 FOR INSTALLATION INSTRUCTIONS AND INSPECTION)
6. SERVICE ENTRANCE RATED.
7. GROUND PER WAC & NEC.
8. ALL SWITCHBOARDS, PANELBOARDS, AND DEVICES, SHALL MEET OR EXCEED THE LISTED AVAILABLE FAULT FOR THAT PANEL OR DEVICE. SYSTEM SHALL BE FULLY RATED.
9. PROVIDE NEW CIRCUIT FROM NEW MDP TO EXISTING ELEVATOR DISCONNECT/ECB.

TCA
ARCHITECTURE + PLANNING + DESIGN
6211 ROOSEVELT WAY NORTHEAST
SEATTLE, WA 98115
tel: (206) 522-3830
fax: (206) 522-2456

CASE ENGINEERING
ELECTRICAL | LIGHTING | TELECOM | SECURITY
19515 North Creek Parkway, Suite 302
Bothell, WA 98011
425-402-9400 office@caseeng.com

MICHAEL S. CASE
STATE OF WASHINGTON
33273
REGISTERED
PROFESSIONAL ENGINEER

12/07/2023

BID SET

No.	Description	Date:
1	ADDENDUM 1	12/01/23
2	ADDENDUM 2	12/07/23

Project Title:

FIRE STATION 26 RENOVATION
CITY OF KIRKLAND
9930 124TH AVE NE KIRKLAND, WA 98033

Sheet Title:

ONE LINE DIAGRAM

Scale: NOTED
Project No. : 22-27-26
Date : 12/07/2023

Sheet Number :

E9.1

PANEL 'EV'

PROJECT NAME: KIRKLAND FIRE STATION 26 — PROJECT #: 22343
LOCATION: KIRKLAND WA — FED FROM: MDP

NOTE	CKT NO.	CIRCUIT NAME	θ	CB SIZE AMP	CB SIZE P	LOAD (KVA) R	H	M	L	K	O	TOTAL
	1	EV CHARGER	A	40	2						3.60	3.60
	3	-	B	-	-						3.60	3.60
	5	EV CHARGER	C	40	2						3.60	3.60
	7	-	A	-	-						3.60	3.60
	9	EV CHARGER	B	40	2						3.60	3.60
	11	-	C	-	-						3.60	3.60
	13	EV CHARGER	A	40	2						3.60	3.60
	15	-	B	-	-						3.60	3.60
	17	SPACE	C	-	1							
	19	SPACE	A	-	1							
	21	SPACE	B	-	1							
	23	SPACE	C	-	1							
	2	FUTURE EV CHARGER	A	40	2						3.60	3.60
	4	-	B	-	-						3.60	3.60
	6	FUTURE EV CHARGER	C	40	2						3.60	3.60
	8	-	A	-	-						3.60	3.60
	10	FUTURE EV CHARGER	B	40	2						3.60	3.60
	12	-	C	-	-						3.60	3.60
	14	SPARE	A	40	2							
	16	-	B	-	-							
	18	SPACE	C	-	1							
	20	SPACE	A	-	1							
	22	SPACE	B	-	1							
	24	SPACE	C	-	1							

PANEL DESCRIPTION

PANEL AMPS :	225
FEEDER AMPS :	225
L - L VOLTS :	208
L - N VOLTS :	120
PHASE :	3
WIRE :	4
M.L.O.	X
MAIN CB	
FLUSH	
SURFACE	X
ISO GND	
FEED-THRU	

LOAD SUMMARY

REC KVA :	
HEAT KVA :	
MOTOR KVA :	
LIGHTING KVA :	
KITCHEN KVA :	
OTHER KVA :	50.40
PHASE A KVA :	18.00
AMPS :	150
PHASE B KVA :	18.00
AMPS :	150
PHASE C KVA :	14.40
AMPS :	120
CONNECTED LOAD	
KVA :	50.40
AMPS :	140
DEMAND LOAD	
KVA :	50.40
AMPS :	140

NOTES/REMARKS :
1.
2.
3.

DEMAND / DIVERSITY FACTORS

LOAD	DESCRIPTION	DEMAND		
R	RECEPTACLES - TO 10KVA	100%	=	
	REMAINING OVER 10KVA	50%	=	
H	HEATING	100%	=	
M	MOTORS	100%	=	
LM	LARGEST MOTOR	125%	=	
L	LIGHTING	125%	=	
K	KITCHEN	65%	=	
O	OTHER	100%	=	50.40

PANEL 'M1'

PROJECT NAME: KIRKLAND FIRE STATION 26 — PROJECT #: 22343
LOCATION: KIRKLAND WA — FED FROM: MDP

NOTE	CKT NO.	CIRCUIT NAME	θ	CB SIZE AMP	CB SIZE P	LOAD (KVA) R	H	M	L	K	O	TOTAL
	1	EF-1	A	20	3			0.55				0.6
	3	-	B	-	-			0.55				0.6
	5	-	C	-	-			0.55				0.6
1	7	IH-1	A	20	1		0.60					0.6
	9	IH-2	B	20	1		0.60					0.6
	11	IH-3	C	20	1		0.60					0.6
	13	DH-1	A	50	3		6.00					6.0
	15	-	B	-	-		6.00					6.0
	17	-	C	-	-		6.00					6.0
	19	CM-1	A	80	3			5.88				5.9
	21	-	B	-	-			5.88				5.9
	23	-	C	-	-			5.88				5.9
	25	CM-2	A	45	3			3.72				3.7
	27	-	B	-	-			3.72				3.7
	29	-	C	-	-			3.72				3.7
	31	MECHANICAL CONTROLS	A	20	1						0.30	0.3
2	33	REC - MECH ROOF	B	20	1	0.18						0.2
	35	CO/NO2 SENSOR	C	20	1							
	37	MUA-1	A	20	1			0.87	0.10			1.0
	39	BC-1 & BC-2	B	20	2						0.28	0.3
	41	-	C	-	-						0.28	0.3
	43	SPARE	A	20	1							
	45	SPARE	B	20	2							
	47	-	C	-	-							
	49	SPARE	A	20	1							
	51	SPARE	B	20	1							
	53	GENERATOR BLOCK HEATER	C	20	1		1.50					1.5
	55	GENERATOR STRIP HEATER	A	20	1		0.75					0.8
	57	GENEATOR BATTERY CHARGER	B	20	1						0.20	0.2
	59	GENERATOR BATTERY HEATER	C	20	1		0.50					0.5
	61	SPARE	A	20	1							
	63	SPARE	B	20	1							
	65	NEDERMAN CONTROL PANEL	C	20	1						1.5	1.5
	67	NF-1	A	50	3			2.9				2.9
	69	-	B	-	-			2.9				2.9
	71	-	C	-	-			2.9				2.9
	73	SPACE	A	-	1							
	75	SPACE	B	-	1							
	77	SPACE	C	-	1							
	79	SPACE	A	-	1							
	81	SPACE	B	-	1							
	83	SPACE	C	-	1							
	2	RCP-A1	A	20	2		0.33					0.3
	4	-	B	-	-		0.33					0.3
	6	RCP-A2	C	20	2		0.33					0.3
	8	-	A	-	-		0.33					0.3
	10	RCP-A3	B	20	2		0.33					0.3
	12	-	C	-	-		0.33					0.3
	14	RCP-A4	A	20	2		0.33					0.3
	16	-	B	-	-		0.33					0.3
	18	RCP-A5	C	20	2		0.33					0.3
	20	-	A	-	-		0.33					0.3
	22	SPARE	B	20	1							
	24	FC-20,21,22,23,24,25	C	20	2						0.27	0.3
	26	-	A	-	-						0.27	0.3
	28	FC-1,2,3,4	B	20	2						0.24	0.2
	30	-	C	-	-						0.24	0.2
	32	FC-5,6,7,8	A	20	2						0.11	0.1
	34	-	B	-	-						0.11	0.1
	36	FC-9,10,11,12	C	20	2						0.10	0.1
	38	-	A	-	-						0.10	0.1
	40	FC-13,14,15	B	20	2						0.10	0.1
	42	-	C	-	-						0.10	0.1
	44	SPARE	A	20	1							
	46	SPARE	B	20	1							
	48	SPARE	C	20	1							
	50	EXISTING AIR COMPRESSOR	A	40	3			2.02				2.0
	52	-	B	-	-			2.02				2.0
	54	-	C	-	-			2.02				2.0
	56	ERV-1	A	20	3			1.69				1.7
	58	-	B	-	-			1.69				1.7
	60	-	C	-	-			1.69				1.7
	62	ERV-2	A	20	2			0.90				0.9
	64	-	B	-	-			0.90				0.9
	66	ERV-3	C	20	2			1.57				1.6
	68	-	A	-	-			1.57				1.6
	70	SPACE	B	-	1							
	72	SPACE	C	-	1							
	74	SPACE	A	-	1							
	76	SPACE	B	-	1							
	78	SPACE	C	-	1							
	80	SPD	A	30	3							
	82	-	B	-	-							
	84	-	C	-	-							

PANEL DESCRIPTION

PANEL AMPS :	400
FEEDER AMPS :	400
L - L VOLTS :	208
L - N VOLTS :	120
PHASE :	3
WIRE :	4
M.L.O.	X
MAIN CB	
FLUSH	
SURFACE	X
ISO GND	
FEED-THRU	

LOAD SUMMARY

REC KVA :	0.2
HEAT KVA :	25.8
MOTOR KVA :	56.1
LIGHTING KVA :	0.1
KITCHEN KVA :	
OTHER KVA :	4.2
PHASE A KVA :	29.6
AMPS :	247.0
PHASE B KVA :	26.4
AMPS :	219.7
PHASE C KVA :	30.4
AMPS :	253.4
CONNECTED LOAD	
KVA :	86.4
AMPS :	239.9
DEMAND LOAD	
KVA :	87.9
AMPS :	244.0

NOTES/REMARKS :
1.
2.
3.

DEMAND / DIVERSITY FACTORS

LOAD	DESCRIPTION	DEMAND		
R	RECEPTACLES - TO 10KVA	100%	=	0.2
	REMAINING OVER 10KVA	50%	=	
H	HEATING	100%	=	25.8
M	MOTORS	100%	=	50.3
LM	LARGEST MOTOR	125%	=	7.4
L	LIGHTING	125%	=	0.1
K	KITCHEN	65%	=	
O	OTHER	100%	=	4.2

2

TCA
ARCHITECTURE + PLANNING + DESIGN
6211 ROOSEVELT WAY NORTHEAST
SEATTLE, WA 98115
tel: (206) 522-3830
fax: (206) 522-2456

CASE ENGINEERING
ELECTRICAL | LIGHTING | TELECOM | SECURITY
19515 North Creek Parkway, Suite 302
Bothell, WA 98011
425-402-9400 office@caseeng.com

MICHAEL S. CASE — STATE OF WASHINGTON — 33273 — REGISTERED PROFESSIONAL ENGINEER

12/07/2023

BID SET

No.	Description	Date:
1	ADDENDUM 1	12/01/23
2	ADDENDUM 2	12/07/23

Project Title:

FIRE STATION 26 RENOVATION
CITY OF KIRKLAND
9930 124TH AVE NE KIRKLAND, WA 98033

Sheet Title:

PANEL SCHEDULES

Scale: NOTED
Project No. : 22-27-26
Date : 12/07/2023

Sheet Number :

E10.2