CITY OF KIRKLAND

SCADA REPLACEMENT

MARCH, 2025

JOB NO. 32-25-PW

WAC3000000

CITY OFFICIALS

KELLI CURTIS	MAYOR
NEAL BLACK	DEPUTY MAYOR
SHILPA PREM	COUNCIL MEMBER
JAY ARNOLD	COUNCIL MEMBER
AMY FALCONE	COUNCIL MEMBER
JOHN TYMCZYSZYN	COUNCIL MEMBER
JON PASCAL	COUNCIL MEMBER
KURT TRIPLETT	CITY MANAGER
JULIE UNDERWOOD	PUBLIC WORKS DIRECTOR
ROB ENGLISH, PE	CAPITAL DIVISION MANAGER

CONTACT PERSONNEL

NAME	AGENCY	PHONE
BEN MAHONY	COK PROJECT ENGINEER	425.587.3248
I-WEN YANG, PE	COK PROJECT ENGINEER	425.587.3832
STEVE HOOPES	COK SENIOR CIP INSPECTOR	425.623.5086
EVAN HEIMBUCH	COK FIELD REPRESENTATIVE	206.496.4265
CITY OF KIRKLAND	UTILITY O&M MANAGER	425.587.3900
CITY OF KIRKLAND	COK WATER & SEWER SUPERVISOR	425.587.3900
CITY OF KIRKLAND	COK STORM DRAINAGE SUPERVISOR	425.587.3900
CITY OF KIRKLAND	COK STREETS & GROUNDS MANAGER	425.587.3900
KIARA SKYE	PUGET SOUND ENERGY (GAS/ELEC.)	425.213.9205
RUSTY PERDIEU	ZAYO	706.889.6967
CHRIS COMBS	COMCAST CABLE	425.273.7832
CHERYL SCHNEIDER	ZIPLY FIBER	425.949.0230
SCOTT CHRISTENSON	VERIZON BUSINESS	425.471.1079
KEN McDOWELL	WOODINVILLE WATER DISTRICT	425.487.4104
DAVID FREEMAN	KING COUNTY METRO	425.477.1140
LAURA DEGOOYER	LAKE WASH. SCHOOL DISTRICT	425.936.1133
EMERGENCY	NORCOM	911
POLICE MAIN LINE	COK	425.587.3400
FIRE MAIN LINE	COK	425.864.3650
SPILL RESPONSE HOTLINE	COK	425.587.3900
ONE CALL UTILITY LOCATE		800.424.5555

KIRKLAND

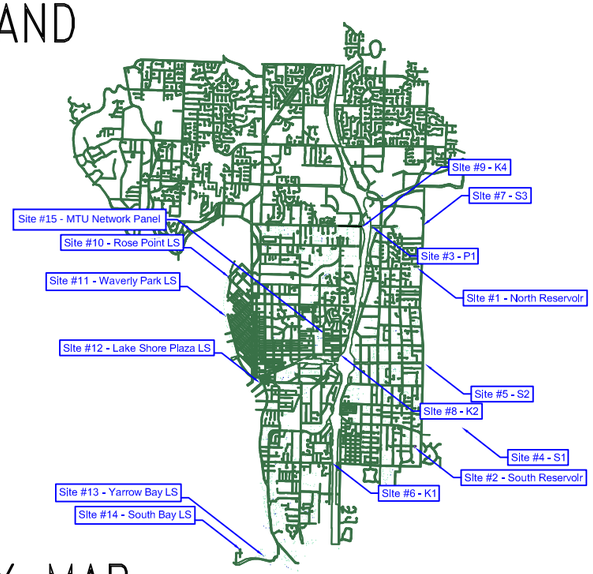

NO SCALE

VICINITY MAP

INDEX OF DRAWINGS - SEE NEXT SHEET (TABLE OF CONTENTS)

SHEET TITLE:	SHEET NO.:
LEGEND NOTES, AND ABBREVIATIONS	1
DRAWING SYMBOLS & STANDARDS - ELETRICAL SYMBOLS & ENCLOSURE SPECIFICATIONS	2
STANDARD PLAN NOTES	3
MASTER KEY PLAN	4
NORTH RESERVOIR SITE IMPROVEMENTS	**5 to 28**
ANTENNA/ CONDUIT PLANS	*5*
BILL OF MATERIALS	*6*
I/O LIST	*7*
EXISTING CONTROL PANEL PLANS (REFERENCE)	*8 to 13*
CONTROL PANEL PLANS (PROPOSED)	*14 to 28*
SOUTH RESERVOIR SITE IMPROVEMENTS	**29 to 80**
ANTENNA/ CONDUIT PLANS	*29*
BILL OF MATERIALS	*30*
I/O LIST	*31 to 32*
EXISTING CONTROL PANEL PLANS (REFERENCE)	*33 to 48*
CONTROL PANEL PLANS (PROPOSED)	*49 to 80*
P1 SITE IMPROVEMENTS	**81 to 94**
ANTENNA/ CONDUIT PLANS	*81*
BILL OF MATERIALS	*82*
I/O LIST	*83*
EXISTING CONTROL PANEL PLANS (REFERENCE)	*84 to 93*
CONTROL PANEL PLANS (PROPOSED)	*94*
S1 SITE IMPROVEMENTS	**95 to 118**
ANTENNA/ CONDUIT PLANS	*95*
BILL OF MATERIALS	*96*
I/O LIST	*97*
EXISTING CONTROL PANEL PLANS (REFERENCE)	*98 to 103*
CONTROL PANEL PLANS (PROPOSED)	*104 to 118*
S2 SITE IMPROVEMENTS	**119 to 153**
ANTENNA/ CONDUIT PLANS	*119*
BILL OF MATERIALS	*120*
I/O LIST	*121 to 122*
EXISTING CONTROL PANEL PLANS (REFERENCE)	*123 to 136*
CONTROL PANEL PLANS (PROPOSED)	*137 to 153*
K1 SITE IMPROVEMENTS	**154 to 167**
ANTENNA/ CONDUIT PLANS	*154*
BILL OF MATERIALS	*155*
I/O LIST	*156*
EXISTING CONTROL PANEL PLANS (REFERENCE)	*157 to 166*
CONTROL PANEL PLANS (PROPOSED)	*167*
S3 SITE IMPROVEMENTS	**168 to 192**
ANTENNA/ CONDUIT PLANS	*168*
BILL OF MATERIALS	*169*
I/O LIST	*170*
EXISTING CONTROL PANEL PLANS (REFERENCE)	*171 to 177*
CONTROL PANEL PLANS (PROPOSED)	*178 to 192*
K2 SITE IMPROVEMENTS	**193 to 194**
ANTENNA/ CONDUIT PLANS	*193*
BILL OF MATERIALS	*194*
K4 SITE IMPROVEMENTS	**195 to 208**
ANTENNA/ CONDUIT PLANS	*195*
BILL OF MATERIALS	*196*
I/O LIST	*197*
EXISTING CONTROL PANEL PLANS (REFERENCE)	*198 to 207*
CONTROL PANEL PLANS (PROPOSED)	*208*
ROSE POINT LIFT STATION SITE IMPROVEMENTS	**209 to 227**
ANTENNA/ CONDUIT PLANS	*209*
BILL OF MATERIALS	*210*
I/O LIST	*211 to 212*
EXISTING CONTROL PANEL PLANS (REFERENCE)	*213 to 226*
CONTROL PANEL PLANS (PROPOSED)	*227*
WAVERLY PARK LIFT STATION SITE IMPROVEMENTS	**228 to 255**
ANTENNA/ CONDUIT PLANS	*228*
BILL OF MATERIALS	*229*
I/O LIST	*230 to 231*
EXISTING CONTROL PANEL PLANS (REFERENCE)	*232 to 238*
CONTROL PANEL PLANS (PROPOSED)	*239 to 255*
LAKE SHORE PLAZA LIFT STATION SITE IMPROVEMENTS	**256 to 310**
ANTENNA/ CONDUIT PLANS	*256*
BILL OF MATERIALS	*257 to 258*
I/O LIST	*259 to 261*
EXISTING CONTROL PANEL PLANS (REFERENCE)	*262 to 282*
CONTROL PANEL PLANS (PROPOSED)	*283 to 310*
YARROW BAY LIFT STATION SITE IMPROVEMENTS	**311 to 336**
ANTENNA/ CONDUIT PLANS	*311*
BILL OF MATERIALS	*312 to 313*
I/O LIST	*314*
EXISTING CONTROL PANEL PLANS (REFERENCE)	*315 to 321*
CONTROL PANEL PLANS (PROPOSED)	*322 to 336*
SOUTH BAY LIFT STATION SITE IMPROVEMENTS	**337 to 362**
ANTENNA/ CONDUIT PLANS	*337*
BILL OF MATERIALS	*338*
I/O LIST	*339*
EXISTING CONTROL PANEL PLANS (REFERENCE)	*340 to 346*
CONTROL PANEL PLANS (PROPOSED)	*347 to 362*
MTU NETWORK SITE IMPROVEMENTS	**363**
CONTROL PANEL PLANS (PROPOSED)	*363*
BILL OF MATERIALS	*364*
SPARE PARTS - BILL OF MATERIALS	**365**
BILL OF MATERIALS	*365*
ANTENNA AND ANTENNA BASE STANDARD DETAILS	366 (1 & 2)

Know what's below. Call 811 before you dig.

DATE	NO.	REVISION	BY
X/X/X	0	BID SET	

APPROVED BY:

Rob English, PE

DATE: 3/3/2026

Ben Mahony (DESIGNED BY)	2/26/2026 (DATE)
Ben Mahony (DRAWN BY)	2/26/2026 (DATE)
I-Wen Yang, PE (REVIEWED BY)	2/26/2026 (DATE)

CITY OF KIRKLAND

DEPARTMENT OF PUBLIC WORKS
123 FIFTH AVENUE KIRKLAND, WA 98033
(425) 587–3800 www.kirklandwa.gov

SCADA REPLACEMENT

TABLE OF CONTENTS

LEGEND

- PROPOSED CONDUIT INSTALLATION
- PROPOSED FIBER INSTALLATION
- PROPOSED ANTENNA & BASE LOCATION
- PROPOSED REMOVAL/ REPLACEMENT OF SIDEWALK
- EXISTING STRUCTURE
- EXISTING STRUCTURE (HIDDEN)
- SS — EXISTING SANITARY SEWER UTILITY
- EXISTING SANITARY SEWER MANHOLE
- SD — EXISTING STORM DRAIN PIPE
- EXISTING EXISTING STORM DRAIN CATCH BASIN
- W — EXISTING EXISTING WATER PIPE UTILITY
- EXISTING EXISTING WATER METER UTILITY
- EXISTING WATER HYDRANT
- EXISTING WATER VALVE UTILITY
- RoW — EXISTING RIGHT-OF-WAY LINE
- PL — EXISTING EXISTING PROPERTY LINE
- GAS — EXISTING GAS UTILITY
- EXISTING GAS METER UTILITY
- SITE IMAGE REF. SEE NOTE X

ABBREVIATIONS

AC	ASPHALT CONCRETE PAVEMENT	ESD	ENTERING SIGHT DISTANCE	PVI	POINT OF VERTICAL INTERSECTION
AP	ANGLE POINT	ESMT.	EASEMENT	PUE	PUBLIC UTILITY EASEMENT
ATB	ASPHALT TREATED BASE	EVA	EMERGENCY VEHICLE ACESS	REQ'D	REQUIRED
AVE	AVENUE	EXIST.	EXISTING	ROW	RIGHT-OF-WAY
BCR	BEGIN CURB RETURN	FL	FLOW LINE	RT	RIGHT
BOC	BACK OF CURB	FL.	FLANGE	S	SOUTH
CL	CENTERLINE	FOC	FACE OF CURB	SD	STORM DRAIN
CB	CATCH BASIN	HORIZ	HORIZONTAL	SDCB	STORM DRAIN CATCH BASIN
CDF	CONTROLLED DENSITY FILL	IE	INVERT ELEVATION	SP	SPACE
CMP	CORRUGATED METAL PIPE	INT	INTERSECTION	SS	SANITARY SEWER
CONC.	CONCRETE	LCPE	LINE CORRUGATED POLYETHYLENE PIPE	SSD	STOPPING SIGHT DISTANCE
CONN.	CONNECTION	LF	LINEAL FEET	SSMH	SANITARY SEWER MANHOLE
CONT.	CONTINUOUS	LUI	LAND USE INSPECTOR	STA	STATION
COK	CITY OF KIRKLAND	MAX.	MAXIMUM	TESC	TEMPORARY EROSION AND SEDIMENT CONTROL
CIPP	CURED-IN-PLACE PIPE	MDRT	MAJOR DEVELOPMENT REVIEW TEAM		
CPP	CORRUGATED POLYETHYLENE PIPE	MH	MANHOLE	TOC	TOP OF CURB
CSBC	CRUSHED SURFACING BASE COURSE	MIN.	MINIMUM	TYP.	TYPICAL
CSTC	CRUSHED SURFACING TOP COURSE	MJ	MECHANICAL JOINT	TBW	TOP BACK OF WALK
DIA.	DIAMETER	N	NORTH	TOW	TOP OF WALL
DI	DUCTILE IRON	NIC	NOT IN CONTRACT	UNO	UNLESS NOTED
DW	DRIVEWAY	O.C.	ON CENTER	VERT.	VERTICAL
E	EAST	PC	POINT OF CURVATURE	WSDOT	WASHINGTON DEPT. OF TRANSPORTATION
ECR	END CURB RETURN	PE	PLAIN END		
EL.	ELEVATION	PI	POINT OF INTERSECTION	W/	WITH
EOP	EDGE OF PAVEMENT	PL	PLACE	W	WEST
ESC	EROSION AND SEDIMENT CONTROL	PT	POINT OF TANGENCY	WS	WATER SERVICE

GENERAL PROJECT NOTES

1. ALL WORKMANSHIP, METHODS AND MATERIALS FOR THIS PROJECT SHALL CONFORM TO THE 2025 EDITION OF THE STANDARD SPECIFICATIONS FOR ROAD, BRIDGE, AND MUNICIPAL CONSTRUCTION AS PRODUCED BY WSDOT AND THE WASHINGTON STATE CHAPTER OF THE APWA; APPLICABLE CITY OF KIRKLAND MUNICIPAL CODE AND PUBLIC WORKS AND DEVELOPMENT STANDARDS; APPLICABLE KING COUNTY CODE AND PUBLIC WORKS AND DEVELOPMENT STANDARDS; AND ANY SPECIAL PROVISIONS PROVIDED BY THESE PLANS OR OTHER CONTRACT DOCUMENTS FOR THE PROJECT.
2. EXISTING UTILITIES ARE SHOWN IN THESE PLANS PER THE LATEST AVAILABLE INFORMATION. THE CONTRACTOR SHALL VERIFY THE LOCATIONS OF ALL UTILITIES AND RELATED SURFACE FEATURES WITHIN THE PROJECT AREA AND NOTIFY THE ENGINEER OF ANY DISCREPANCIES WITH THE PLAN INFORMATION PRIOR TO CONSTRUCTION. THE CONTRACTOR SHALL, AT MINIMUM, CONTACT THE UNDERGROUND UTILITIES LOCATE CENTER (1-800-424-5555) TO HAVE UTILITIES VERIFIED ON THE GROUND PRIOR TO CONSTRUCTION. THE CONTRACTOR IS ALSO RESPONSIBLE FOR ENSURING THAT THE UTILITY LOCATES ARE MAINTAINED THROUGHOUT THE DURATION OF THE PROJECT. THE CONTRACTOR SHALL TAKE ALL NECESSARY PRECAUTIONS TO AVOID DAMAGING ANY UTILITIES. IF CONFLICTS ARISE DURING CONSTRUCTION, THE CONTRACTOR MUST NOTIFY THE CITY CONSTRUCTION INSPECTOR. ANY REQUIRED CHANGES MUST BE APPROVED BY THE ENGINEER BEFORE PROCEEDING WITH THE RELATED WORK.
3. ALL DISTURBED AREAS SHALL BE SEEDED AND MULCHED, OR OTHERWISE STABILIZED, TO THE SATISFACTION OF THE CITY OF KIRKLAND DEPARTMENT OF PUBLIC WORKS TO PREVENT ANY ON-SITE EROSION FOLLOWING THE COMPLETION OF THE PROJECT.
4. FOR STREETS DESIGNATED AS ARTERIALS OR COLLECTORS, BACKFILL FOR CROSSINGS SHALL BE CDF. CUTS INTO THE EXISTING ASPHALT SHOULD BE MADE WITH A NEAT, CONTINUOUS LINE USING A SAW OR JACKHAMMER. A TEMPORARY COLD MIX PATCH MUST BE APPLIED IMMEDIATELY AFTER BACKFILLING AND COMPACTION. A PERMANENT HOT MIX PATCH MUST BE INSTALLED WITHIN 30 DAYS, WITH A THICKNESS OF AT LEAST 1 INCH GREATER THAN THE ORIGINAL ASPHALT, AND A MINIMUM THICKNESS OF 2 INCHES.
5. WHEN REQUIRED, ALL PIPES, MANHOLES, CATCH BASINS, AND APPURTENANCES SHALL BE INSTALLED ON A PROPERLY PREPARED FOUNDATION IN ACCORDANCE WITH THE CURRENT WSDOT STANDARD SPECIFICATIONS. THIS INCLUDES LEVELING THE TRENCH BOTTOM OR FOUNDATION MATERIAL, AND PLACING AND COMPACTING THE REQUIRED BEDDING MATERIAL TO ENSURE THE LENGTH OF THE PIPE IS SUPPORTED ON A UNIFORM, DENSE, AND STABLE BASE. OPEN CUT ROAD CROSSINGS FOR UTILITY TRENCHES SHALL BE BACKFILLED PER COK STANDARD PLAN CK-D.02 FOR STORM SEWER AND CK-S.01 FOR SANITARY SEWER. TRENCH BACKFILL SHALL BE COMPACTED TO 90% DENSITY IN ROADWAYS, SHOULDERS, ROADWAY PRISMS, AND DRIVEWAYS AND 85% DENSITY IN UNPAVED AREAS. PIPE COMPACTION SHALL BE 95%.
6. IF THE PAVEMENT, SIDEWALKS, CURB, OR GUTTER ARE DISTURBED OR DAMAGED DURING CONSTRUCTION, THEY SHALL BE REPLACED IN-KIND TO MEET THE SAME STANDARDS AS THE NEW FACILITIES, WITH A SUITABLE, COMPACT FOUNDATION IN ACCORDANCE WITH THE STANDARD SPECIFICATIONS AND PROJECT CONTRACT DOCUMENTS.
7. AT LEAST TWO COPIES OF THESE PLANS SHALL BE ON THE JOB SITE WHEN CONSTRUCTION IS IN PROGRESS. THE CONTRACTOR SHALL ALSO HAVE COPIES OF THE APPLICABLE REGULATORY AGENCY STANDARDS AVAILABLE AT THE JOB SITE DURING THE RELATED CONSTRUCTION OPERATIONS. ALL APPLICABLE PERMITS SHALL BE OBTAINED PRIOR TO ANY CONSTRUCTION ACTIVITY. ONE COMPLETE SET OF PROJECT PLANS WITH RECORDS OF AS-BUILT INFORMATION SHALL BE PROVIDED TO THE PROJECT ENGINEER AT THE END OF THE PROJECT.
8. THE CONTRACTOR SHALL COORDINATE ACTIVITIES OF ALL UTILITY PURVEYORS IMPACTED BY WORK FOR THIS PROJECT AND SHALL CONTACT THEM PRIOR TO CONSTRUCTION TO SCHEDULE WORK FOR PROVISIONS FOR AND BE RESPONSIBLE TO SUPPORT, MAINTAIN, OR OTHERWISE PROTECT AND KEEP IN SERVICE ALL EXISTING UTILITIES WHETHER SHOWN OR NOT SHOWN ON THESE PLANS DURING CONSTRUCTION.
9. UTILITIES, OR INTERFERING PORTIONS OF UTILITIES, THAT ARE ABANDONED IN PLACE SHALL BE REMOVED BY THE CONTRACTOR TO THE EXTENT NECESSARY TO COMPLETE THE PROPOSED WORK. THE CONTRACTOR SHALL PLUG THE REMAINING EXPOSED ENDS OF ABANDONED UTILITIES. CUTTING AND PLUGGING OF LINES TO BE ABANDONED SHALL BE CONSIDERED INCIDENTAL TO OTHER WORK PERFORMED.
10. THE CONTRACTOR SHALL OBTAIN THE SERVICES OF A QUALIFIED SOILS ENGINEER AND/OR TESTING AGENCY TO PERFORM SUBGRADE/ BACKFILL DENSITY TESTS OR TO DIRECT THE REMOVAL AND REPLACEMENT OF ANY UNSUITABLE MATERIALS DURING CONSTRUCTION. A REPRESENTATIVE OF THE SOILS ENGINEER AND /OR TESTING AGENCY SHALL BE AVAILABLE TO OBSERVE AND TO VERIFY FIELD CONDITIONS AS WORK PROCEEDS. THE SOILS ENGINEER SHALL SUBMIT FIELD REPORTS AS REQUIRED TO CERTIFY THE METHODS AND MATERIALS ARE IN ACCORDANCE WITH PROJECT SPECIFICATIONS. THE CONTRACTOR SHALL COORDINATE THE APPROPRIATE SOILS INSPECTIONS AND TESTING.
11. THE CONTRACTOR SHALL BE RESPONSIBLE FOR PROVIDING ADEQUATE TRAFFIC CONTROL DURING CONSTRUCTION ADJACENT TO OR WITHIN ALL PUBLIC ROADWAYS. ANY WORK WITHIN THE TRAVELED RIGHT-OF-WAY THAT MAY DISRUPT NORMAL TRAFFIC FLOW WILL REQUIRE A TRAFFIC CONTROL PLAN APPROVED BY THE CITY OF KIRKLAND. ALL SECTIONS OF THE WSDOT STANDARD SPECIFICATIONS, TRAFFIC CONTOL REQUIREMENTS, AND THE MANUAL ON UNIFORM TRAFFIC CONTROL DEVICES (MUTCD) SHALL APPLY. TRAFFIC CONTROL MEASURES SHALL BE IN PLACE PRIOR TO ANY CONSTRUCTION ACTIVITY. THE CONTRACTOR SHALL MAINTAIN ACCESS TO ALL PRIVATE PROPERTY DRIVEWAYS DURING CONSTRUCTION.
12. ALL PIPE LENGTHS, STRUCTURE LOCATIONS, AND DEPTHS ARE MEASURED AT THE CENTER OF THE STRUCTURE, UNLESS OTHERWISE SPECIFIED.
13. THE CONTRACTOR SHALL PROMPTLY REPAIR ANY DAMAGE TO PUBLIC AND/ OR PRIVATE PROPERTY CAUSED DURING CONSTRUCTION, AT NO ADDITIONAL COST TO THE CITY. REPAIRS MUST BE COMPLETED TO THE APPROVAL OF THE CITY ENGINEER PRIOR TO PROJECT APPROVAL AND/ OR RELEASE OF THE PROJECT'S PERFORMANCE BOND.
14. THE CONTRACTOR SHALL BE RESPONSIBLE FOR PROVIDING ADEQUATE SAFEGUARDS, SAFETY DEVICES, PROTECTIVE EQUIPMENT, CONFINED SPACED PROTECTION, FLAGGERS, AND ANY OTHER NECESSARY MEASURES TO PROTECT THE HEALTH, SAFETY, AND WELL-BEING OF THE PUBLIC. IN ADDITION TO PROTECTING THE PROPERTY DURING THE PERFORMANCE OF THE WORK UNDER THE CONTRACT.
15. THE APPROXIMATE LOCATIONS OF EXISTING UTILITIES HAVE BEEN OBTAINED FROM AVAILABLE RECORDS AND ARE PROVIDED FOR REFERENCE. THE EXISTING TOPOGRAPHIC AND PHYSICAL FEATURES DEPICTED ON THESE PLANS ARE BASED ON COK GIS DATA. THE CONTRACTOR MAY ENCOUNTER DISCREPANCIES BETWEEN THE ACTUAL CONDITIONS AND THOSE SHOWN IN THE PLANS. THE CONTRACTOR IS RESPONSIBLE FOR VERIFYING THE LOCATIONS OF EXISTING UTILITIES, REGARDLESS OF WHETHER THEY ARE SHOWN ON THE PROJECT PLANS.
17. RECYCLED MATERIAL SHALL NOT BE USED FOR ANY TRENCH BACKFILL.

EXISTING LANDSCAPE NOTES

1. ALL EXISTING TREES WITHIN OR ADJACENT TO THE WORK AREA SHALL REMAIN, UNLESS OTHERWISE NOTED ON PLANS OF APPROVED BY THE PROJECT ENGINEER FOR REMOVAL.
2. THE CONTRACTOR SHALL SEQUENCE AND EXECUTE WORK AND EMPLOY ALL REASONABLE PROTECTION MEASURES TO LIMIT AND MINIMIZE DISTURBANCE TO EXISTING LANDSCAPE AREAS AND VEGETATION IN OR IN PROXIMITY TO THE WORK ZONE(S). DISTURBANCE TO EXISTING LANDSCAPE AND VEGETATION SHALL BE LIMITED TO ONLY THAT NECESSARY TO COMPLETE THE WORK. DISTURBED LANDSCAPE SHALL BE REPLACED AND/ OR RESTORED IN-KIND OR BETTER CONDITION.

Know what's below. Call 811 before you dig.

DATE	NO.	REVISION	BY
X/X/X	0	BID SET	

APPROVED BY:

Rob English, PE

DATE: 3/3/2026

Ben Mahony — DESIGNED BY	2/26/2026 — DATE
Ben Mahony — DRAWN BY	2/26/2026 — DATE
I-Wen Yang, PE — REVIEWED BY	2/26/2026 — DATE

CITY OF KIRKLAND

DEPARTMENT OF PUBLIC WORKS
123 FIFTH AVENUE KIRKLAND, WA 98033
(425) 587–3800 www.kirklandwa.gov

SCADA REPLACEMENT

LEGEND, NOTES, AND ABBREVIATIONS

REFERENCE SHEET NO. LNA_01

SHEET 1 of 366

TERMINAL AND WIRING IDENTIFICATION

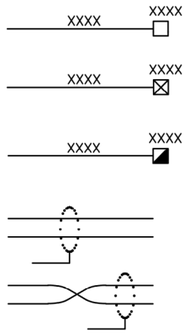

DC FIELD DEVICE TERMINAL IN TSI PANEL
(WIRE AND TERMINAL ARE THE SAME NUMBER)

AC FIELD DEVICE TERMINAL IN TSI PANEL
(WIRE AND TERMINAL ARE THE SAME NUMBER)

277 OR HIGHER AC FIELD DEVICE
TERMINAL IN TSI PANEL
(WIRE AND TERMINAL ARE THE SAME NUMBER)

SHIELDED WIRE

TWISTED SHIELDED WIRE

CONTROL WIRE SPECIFICATION – (UL508A STANDARD)

APPLICATION	COLOR	SIZE / TYPE
480 VAC:		
POWER	LOCAL CODE	Min. 12 AWG AS REQUIRED MTW/TEW (TINNED)
NEUTRAL	LOCAL CODE	
GROUND	LOCAL CODE	
240 VAC:		
POWER	BLACK	12 GA MTW/TEW (TINNED)
NEUTRAL	WHITE	
GROUND	GREEN	
120 VAC:		
POWER	RED	14 AWG (Min) MTW/TEW (TINNED)
NEUTRAL	WHITE	
GROUND	GREEN	
24 VDC:		
POSITIVE	BLUE	16 AWG (Min) MTW/TEW (TINNED)
NEGATIVE	WHITE/BLUE	
12 VDC:		
POSITIVE	BLUE	16 AWG (Min) MTW/TEW (TINNED)
NEGATIVE	WHITE/BLUE	
120 VAC FOREIGN:		
POWER	YELLOW	14 AWG (Min) MTW/TEW (TINNED)
NEUTRAL	WHITE/YELLOW	
SIGNAL:	RED/BLACK	18 AWG (Min) TSP
	BLACK/WHITE	

DRAWING DESIGNATIONS

E – ELECTRICAL DRAWINGS
F – FABRICATION DRAWINGS
J – PANEL LAYOUT DRAWINGS
L – LOOP DRAWINGS
M – MECHANICAL DRAWINGS
N – P & ID
P – PANEL POWER WIRING DIAGRAMS
SD – INSTALLATION DETAIL or STANDARD DETAIL DRAWINGS

DRAWING SYMBOLS

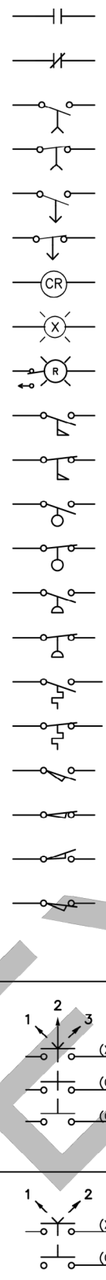

CONTACT – NORMALLY OPEN
CONTACT – NORMALLY CLOSED
CONTACT –NORMALLY OPEN TIME TO CLOSE
CONTACT –NORMALLY CLOSED TIME TO OPEN
CONTACT –NORMALLY OPEN TIME TO OPEN
CONTACT –NORMALLY CLOSED TIME TO CLOSE
COIL – CONTROL RELAY
PILOT LIGHT — A–AMBER, B–BLUE, C–CLEAR, G–GREEN, R–RED, W–WHITE
PILOT LIGHT – PUSH–TO–TEST
FLOW SWITCH – NORMALLY OPEN
FLOW SWITCH – NORMALLY CLOSED
FLOAT SWITCH – NORMALLY OPEN
FLOAT SWITCH – NORMALLY CLOSED
PRESSURE SWITCH – NORMALLY OPEN
PRESSURE SWITCH – NORMALLY CLOSED
TEMPERATURE SWITCH – NORMALLY OPEN
TEMPERATURE SWITCH – NORMALLY CLOSED
LIMIT SWITCH – NORMALLY OPEN (FREE)
LIMIT SWITCH – NORMALLY CLOSED (FREE)
LIMIT SWITCH – NORMALLY OPEN (HELD)
LIMIT SWITCH – NORMALLY CLOSED (HELD)

3–POSITION SELECTOR SWITCH

CLOSED IN POSITION–1
CLOSED IN POSITION–2
CLOSED IN POSITION–3

2–POSITION SELECTOR SWITCH

CLOSED IN POSITION–1
CLOSED IN POSITION–2

DRAWING SYMBOLS

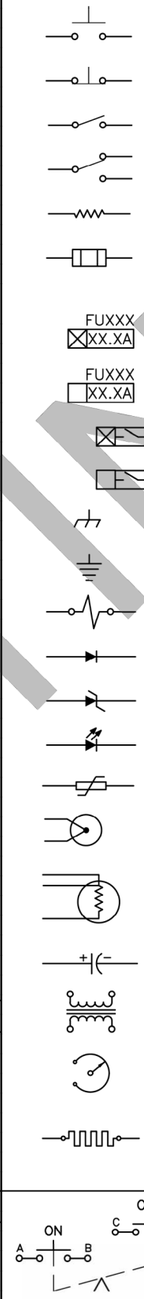

PUSHBUTTON – NORMALLY OPEN
PUSHBUTTON – NORMALLY CLOSED
SWITCH, SINGLE POLE, SINGLE THROW (SPST)
SWITCH, SINGLE POLE, DOUBLE THROW (SPDT)
RESISTOR
FUSE
FUSE WITH BLOWN FUSE INDICATOR – AC
FUSE WITH BLOWN FUSE INDICATOR – DC
SWITCHING TERMINAL BLOCK – AC
SWITCHING TERMINAL BLOCK – DC
GROUND – EARTH
GROUND – CHASSIS
SOLENOID
DIODE
ZENER DIODE
LIGHT EMITTING DIODE
METAL OXIDE VARISTOR (MOV)
THERMOCOUPLE
RTD (3–WIRE)
CAPACITOR – POLARIZED
TRANSFORMER (CPT)
POTENTIOMETER
HEATER

2–POSITION PUSH BUTTON SWITCH

MAINTAINED CONTACTS WITH MECHANICAL INTERLOCK

DRAWING SYMBOLS

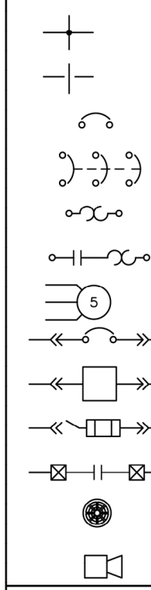

CONNECTION
NO CONNECTION
CIRCUIT BREAKER – SINGLE POLE
CIRCUIT BREAKER – THREE POLE
THERMAL OVERLOAD
MAGNETIC STARTER
MOTOR, 3 PHASE (5 HP)
DRAWOUT CIRCUIT BREAKER – LOW VOLTAGE
DRAWOUT CIRCUIT BREAKER – MEDIUM VOLTAGE
DRAWOUT FUSED SWITCH – MEDIUM VOLTAGE
REMOTE DEVICE WITH TERMINAL POINTS SHOWN
HORN (PIEZO–ELECTRIC)
HORN (VIBRATION)

PANEL SPECIFICATION – (STANDARD)

PANEL MATERIALS:

PANEL SHELL	12 GA COLD ROLLED STEEL
DOORS	12 GA COLD ROLLED STEEL
MOUNTING PANS	12 GA COLD ROLLED STEEL

EXTERIOR FINISH:
ALPHATIC AIR DRY POLYURETHANE ENAMEL AND PRIMER.
FINISHED DRY FILM THICKNESS IS 3.0 MILL MINIMUM.
COLOR IS ANSI–61 LIGHT GREY.

INTERIOR FINISH:
ALPHATIC AIR DRY POLYURETHANE ENAMEL AND PRIMER.
FINISHED DRY FILM THICKNESS IS 3.0 MILL MINIMUM.
COLOR IS WHITE

PANEL LABELING REQUIREMENTS

UL 508A INDUSTRIAL CONTROL EQUIPMENT:

UNDERWRITERS LABORATORY, INC. – UL ☑
ELECTRONIC TESTING LABS, INC. – ETL ☐
NON REQUIRED ☐

EXISTING

Know what's below. Call 811 before you dig.

DATE	NO.	REVISION	BY
X/X/X	0	BID SET	

APPROVED BY:

Rob English, PE

DATE: 3/3/2026

Ben Mahony — DESIGNED BY — 2/26/2026 DATE
Ben Mahony — DRAWN BY — 2/26/2026 DATE
I-Wen Yang, PE — REVIEWED BY — 2/26/2026 DATE

CITY OF KIRKLAND WASHINGTON

CITY OF KIRKLAND
DEPARTMENT OF PUBLIC WORKS
123 FIFTH AVENUE KIRKLAND, WA 98033
(425) 587–3800 www.kirklandwa.gov

DRAWING SYMBOLS & STANDARDS - ELECTRICAL
SYMBOLS & ENCLOSURE SPECIFICATIONS
SCADA REPLACEMENT

REFERENCE SHEET NO.
STDS_01

SHEET 2 of 366

CITY OF KIRKLAND STANDARD PLAN NOTES

EROSION/ SEDIMENTATION CONTROL

1. THE APPROVED CONSTRUCTION SEQUENCE SHALL BE AS FOLLOWS:
   a. CONDUCT PRE-CONSTRUCTION MEETING.
   b. FLAG OR FENCE CLEARING LIMITS.
   c. POST SIGN WITH NAME AND PHONE NUMBER OR TESC SUPERVISOR.
   d. INSTALL CATCH BASIN PROTECTION DOWNSTREAM AND AS DETERMINED BY THE CITY INSPECTOR.
   e. GRADE AND INSTALL CONSTRUCTION ENTRANCE(S).
   f. INSTALL PERIMETER PROTECTION (SILT FENCE, BRUSH BARRIER, ETC.).
   g. CONSTRUCTION SEDIMENT PONDS AND TRAPS.
   h. GRADE AND STABILIZE CONSTRUCTION ROADS.
   i. CONSTRUCT SURFACE WATER CONTROLS (INTERCEPTOR DIKES, PIPE SLOPE DRAINS, ETC.) SIMULTANEOUSLY WITH CLEARING AND GRADING FOR PROJECT DEVELOPMENT.
   j. MAINTAIN EROSION CONTROL MEASURE IN ACCORDANCE WITH CITY OF KIRKLAND STANDARDS AND MANUFACTURER'S RECOMMENDATIONS.
   k. RELOCATE EROSION CONTROL MEASURES OR INSTALL NEW MEASURES SO THAT AS SITE CONDITIONS CHANGE, THE EROSION AND SEDIMENT CONTROL IS ALWAYS IN ACCORDANCE WITH THE CITY TESC MINIMUM REQUIREMENTS.
   l. COVER ALL AREAS WITHIN THE SPECIFIED TIME FRAME WITH STRAW, WOOD FIBER MULCH, COMPOST, PLASTIC SHEETING, CRUSHED ROCK OR EQUIVALENT.
   m. STABILIZE ALL AREAS THAT REACH FINAL GRADE WITHIN 7 DAYS.
   n. SEED OR SOD ANY AREAS TO REMAIN UNWORKED FOR MORE THAN 30 DAYS.
   o. UPON COMPLETION OF THE PROJECT, ALL DISTURBED AREAS MUST BE STABILIZED AND BEST MANAGEMENT PRACTICES REMOVED IF APPROPRIATE.
2. THE CONTRACTOR IS RESPONSIBLE FOR KEEPING STREETS CLEAN AND FREE OF CONTAMINANTS AT ALL TIMES AND FOR PREVENTING ALL ILLICIT DISCHARGE (KMC 15.52) INTO THE MUNICIPAL STORM DRAIN SYSTEM. IF YOUR CONSTRUCTION PROJECT CAUSES AN ILLICIT DISCHARGE TO THE MUNICIPAL STORM DRAIN SYSTEM, THE CITY OF KIRKLAND STORM MAINTENANCE DIVISION WILL BE CALLED TO CLEAN THE PUBLIC STORM SYSTEM, AND OTHER AFFECTED PUBLIC INFRASTRUCTURE. THE CONTRACTOR(S) PROPERTY OWNER, AND ANY OTHER RESPONSIBLE PARTY MAY BE CHARGE ALL COSTS ASSOCIATED WITH THE CLEAN-UP AND MAY ALSO BE ASSESSED MONETARY PENALTIES (KMC 1.12.200). THE MINIMUM PENALTY IS $500. A FINE FOR A REPEAT VIOLATION SHALL BE MULTIPLIED BY THE NUMBER OF VIOLATIONS. A FINE MAY BE REDUCED OR WAIVED FOR PERSONS WHO IMMEDIATELY SELF-REPORT VIOLATION TO THE CITY AT 425-587-3900. A FINAL INSPECTION OF YOUR PROJECT WILL NOT BE GRANTED UNTIL ALL COSTS ASSOCIATED WITH THE CLEAN-UP, AND PENALTIES, ARE PAID TO THE CITY OF KIRKLAND.
3. CONSTRUCTION DEWATERING DISCHARGES SHALL ALWAYS MEET WATER QUALITY GUIDELINES LISTED IN COK POLICY E-1. SPECIFICALLY, DISCHARGES TO THE PUBLIC STORM WATER DRAINAGE SYSTEM MUST BE BELOW 25 NTU, ANT NOT CONSIDERED AN ILLICIT DISCHARGE (PER KMC 15.52.090). TEMPORARY DISCHARGES TO SANITARY SEWER REQUIRE PRIOR AUTHORIZATION AND PERMIT FROM KING COUNTY INDUSTRIAL WASTE PROGRAM (206-263-3000) AND NOTIFICATION TO THE PUBLIC WORKS CONSTRUCTION INSPECTOR.
4. ALL WORK AND MATERIALS SHALL BE IN ACCORDANCE WITH CITY OF KIRKLAND STANDARDS AND SPECIFICATIONS.
5. THE BOUNDARIES OF THE CLEARING LIMITS SHOWN ON THIS PLAN SHALL BE SET BY SURVEY AND CLEARLY FLAGGED IN THE FIELD BY A CLEARING CONTROL FENCE PRIOR TO CONSTRUCTION. DURING THE CONSTRUCTION PERIOD, NO DISTURBANCE OR REMOVAL OF ANY GROUND COVER BEYOND THE FLAGGED CLEARING LIMITS SHALL BE PERMITTED. THE FLAGGING SHALL BE MAINTAINED BY THE PERMITTEE/ CONTRACTOR FOR THE DURATION OF CONSTRUCTION.
6. APPROVAL OF THIS EROSION/ SEDIMENTATION CONTROL (ESC) PLAN DOES NOT CONSTITUTE AN APPROVAL OF PERMANENT ROAD OR DRAINAGE DESIGN (E.G., SIZE AND LOCATION OF ROADS, PIPES, RESTRICTORS, CHANNELS, RETENTION FACILITIES, UTILITIES, ETC.).
7. THE IMPLEMENTATION OF THIS ESC PLAN AND THE CONSTRUCTION, MAINTENANCE, REPLACEMENT, AND UPGRADING OF THESE ESC FACILITIES IS THE RESPONSIBILITY OF THE PERMITTEE/ CONTRACTOR UNTIL ALL CONSTRUCTION IS IN PROGRESS.
8. A COPY OF THE APPROVED ESC PLANS MUST BE ON THE JOB SITE WHENEVER CONSTRUCTION IS IN PROGRESS.
9. THE ESC FACILITIES SHOWN ON THIS PLAN MUST BE CONSTRUCTED PRIOR TO OR IN CONJUNCTION WITH ALL CLEARING AND GRADING ACTIVITIES IN SUCH A MANNER AS TO ENSURE THAT SEDIMENT-LADEN WATER DOES NOT ENTER THE DRAINAGE SYSTEM OR VIOLATE APPLICABLE WATER STANDARDS. WHEREVER POSSIBLE, MAINTAIN NATURAL VEGETATION FOR SILT CONTROL
10. THE ESC FACILITIES SHALL BE CONSTRUCTED IN ACCORDANCE WITH THE DETAILS ON THE APPROVED PLANS. LOCATIONS MAY BE MOVED TO SUIT FIELD CONDITIONS, SUBJECT TO APPROVAL BY THE ENGINEER AND THE CITY OF KIRKLAND INSPECTOR.
11. THE ESC FACILITIES SHOWN ON THIS PLAN ARE THE MINIMUM REQUIREMENTS FOR ANTICIPATED SITE CONDITIONS. DURING THE CONSTRUCTION PERIOD, THESE ESC FACILITIES SHALL BE UPGRADED (E.G., ADDITIONAL SUMPS, RELOCATION OF DITCHES AND SILT FENCES, ETC.) AS NEEDED FOR UNEXPECTED STORM EVENTS. ADDITIONALLY, MORE ESC FACILITIES MAY BE REQUIRED TO ENSURE COMPLETE SILTATION CONTROL. THEREFORE, DURING THE COURSE OF CONSTRUCTION IT SHALL BE THE OBLIGATION AND RESPONSIBILITY OF THE CONTRACTOR TO ADDRESS ANY NEW CONDITIONS THAT MAY BE CREATED BY HIS ACTIVITIES AND TO PROVIDE ADDITIONAL FACILITIES OVER ANY ABOVE THE MINIMUM REQUIREMENTS AS MAY BE NEEDED.
12. THE ESC FACILITIES SHALL BE INSPECTED BY THE PERMITTEE/ CONTRACTOR DAILY DURING NON-RAINFALL PERIODS, EVERY HOUR (DAYLIGHT) DURING A RAINFALL EVENT, AND AT THE END OF EVERY RAINFALL, AND MAINTAINED AS NECESSARY TO ENSURE THAT THEY CONTINUED FUNCTIONING. IN ADDITION, TEMPORARY SILTATION PONDS AND ALL TEMPORARY SILTATION CONTROLS SHALL BE MAINTAINED IN A SATISFACTORY CONDITION UNTIL SUCH TIME THAT CLEARING AND/ OR CONSTRUCTION IS COMPLETED, PERMANENT DRAINAGE FACILITIES ARE OPERATIONAL, AND THE POTENTIAL FOR EROSION HAS PASSSED. WRITTEN RECORDS SHALL BE KEPT DOCUMENTING THE REVIEWS OF THE ESC FACILITIES.
13. THE ESC FACILITIES ON INACTIVE SITES SHALL BE INSPECTED AND MAINTAINED A MINIMUM OF ONCE A MONTH OR WITHIN 38 HOURS FOLLOWING A STORM EVENT.
14. STABILIZED CONSTRUCTION ENTRANCES SHALL BE INSTALLED AT THE BEGINNING OF CONSTRUCTION AND MAINTAINED FOR THE DURATION OF THE PROJECT. ADDITIONAL MEASURES, SUCH AS WASH PADS, MAY BE REQUIRED TO ENSURE THAT ALL PAVED AREAS ARE KEPT CLEAN FOR THE DURATION OF THE PROJECT.
15. ALL DENUDED SOILS MUST BE STABILIZED WITH AN APPROVED TESC METHOD (E.G. SEEDING, MULCHING, PLASTIC COVERING, CRUSHED ROCK) WITHIN THE FOLLOWING TIMELINES:
    - MAY 1 TO SEPTEMBER 30 - SOILS MUST BE STABILIZED WITHIN 7 DAYS OF GRADING.
    - OCTOBER 1 TO APRIL 30 - SOILS MUST BE STABILIZED WITHIN 2 DAYS OF GRADING.
    - STABILIZE SOILS AT THE END OF THE WORKDAY PRIOR TO A WEEKEND, HOLIDAY, OR PREDICTED RAIN EVENT.
16. WHERE SEEDING FOR TEMPORARY EROSION CONTROL IS REQUIRED, FAST GERMINATING GRASSES SHALL BE APPLIED AT AN APPROPRIATE RATE (EXAMPLE: ANNUAL OR PERENNIAL RYE APPLIED AT APPROXIMATELY 80 POUNDS PER ACRE).
17. WHERE STRAW MULCH IS REQUIRED FOR TEMPORARY EROSION CONTROL, IT SHALL BE APPLIED AT A MINIMUM THICKNESS OF 2".
18. ALL LOTS ADJOINING OR HAVING ANY NATIVE GROWTH PROTECTION EASEMENTS (NGPE) SHALL HAVE A 6' HIGH TEMPORARY CONSTRUCTION FENCE (CHAIN LINK WITH PIER BLOCKS) SEPARATING THE LOT (OR BUILDABLE PORTIONS OF THE LOT) FROM THE AREA RESTRICTED BY THE NGPE AND SHALL BE INSTALLED PRIOR TO ANY GRADING OR CLEARING AND REMAIN IN PLACE UNTIL THE PLANNING DEPARTMENT AUTHORIZES REMOVAL.
19. CLEARING LIMITS SHALL BE DELINEATED WITH A CLEARING CONTROL FENCE. THE CLEARING CONTROL FENCE SHALL CONSIST OF A 6-FT, HIGH CHAIN LINK FENCE ADJACENT THE DRIP LINE OF TREES TO BE SAVED, WETLAND OR STREAM BUFFERS, AND SENSITIVE SLOPES. CLEARING CONTROL FENCES ALONG WETLAND OR STREAM BUFFERS OR UPSLOPE OF SENSITIVE SLOPES SHALL BE ACCOMPANIED BY AN EROSION CONTROL FENCE. IF APPROVED BY THE CITY, A FOUR-FOOT HIGH ORANGE MESH CLEARING CONTROL FENCE MAY BE USED TO DELINEATE CLEARING LIMITS IN ALL OTHER AREAS.
20. OFF-SITE STREETS MUST BE KEPT CLEAN AT ALL TIMES. IF DIRT IS DEPOSITED ON THE PUBLIC STREET SYSTEM, THE STREET SHALL BE IMMEDIATELY CLEANED WITH POWER SWEEPER OR OTHER EQUIPMENT. ALL VEHICLES SHALL LEAVE THE SITE BY WAY OF THE CONSTRUCTION ENTRANCE AND SHALL BE CLEANED OF ALL DIRT THAT WOULD BE DEPOSITED ON THE PUBLIC STREETS.
21. ROCK FOR EROSION PROTECTION OF ROADWAY DITCHES, WHERE REQUIRED, MUST BE OF SOUND QUARRY ROCK, PLACED TO A DEPTH OF 1' AND MUST MEET THE FOLLOWING SPECIFICATIONS: 4"-8" ROCK/ 40% -70%; 2" - 4" ROCK/ 30% - 40%; AND 1" - 2" ROCK/ 10% - 20% PASSING. RECYCLED CONCRETE SHALL NOT USED FOR EROSION PROTECTION, INCLUDING CONSTRUCTION ENTRANCE OR TEMPORARY STABILIZATION ELSEWHERE ON THE SITE.
22. IF ANY PART(S) OF THE CLEARING LIMIT BOUNDARY OR TEMPORARY EROSION/ SEDIMENTATION CONTROL PLAN IS/ ARE DAMAGED, IT SHALL BE REPAIRED IMMEDIATELY.
23 ALL PROPERTIES ADJACENT TO THE PROJECT SITE SHALL BE PROTECTED FROM SEDIMENT DEPOSITION AND RUNOFF.
24 AT NO TIME SHALL MORE THAN 1' OF SEDIMENT BE ALLOWED TO ACCUMULATE WITHIN A CATCH BASIN. AL CATCH BASINS AND CONVEYANCE LINES SHALL BE CLEANED IMMEDIATELY FOLLOWING REMOVAL OF EROSION CONTROL BMPS. THE CLEANING OPERATION SHALL NOT FLUSH SEDIMENT-LADEN WATER INTO THE DOWNSTREAM SYSTEM.
25. ANY PERMANENT RETENTION/ DETENTION FACILITY USED AS A TEMPORARY SETTLING BASIN SHALL BE MODIFIED WITH THE NECESSARY EROSION CONTROL MEASURES AND SHALL PROVIDE ADEQUATE STORAGE CAPACITY. IF THE PERMANENT FACILITY IS TO FUNCTION ULTIMATELY AS AN INFILTRATION OR DISPERSION SYSTEM. THE FACILITY SHALL NOT BE USED AS A TEMPORARY SETTLING BASIN. NO UNDERGROUND DETENTION TANK, DETENTION VAULT, OR SYSTEM WHICH BACKS UNDER OR INTO A POND SHALL BE USED AS A TEMPORARY SETTLING BASIN.
26. ALL EROSION/ SEDIMENTATION CONTROL PONDS WITH A DEAD STORAGE DEPTH EXCEEDING 6" MUST HAVE A PERIMETER FENCE WITH A MINIMUM HEIGHT OF 3'.
27. THE WASHED GRAVEL BACKFILL ADJACENT TO THE FILTER FABRIC FENCE SHALL BE REPLACED AND THE FILTER FABRIC CLEANED IF IT IS NONFUNCTIONAL BY EXCESSIVE SILT ACCUMULATION AS DETERMINED BY THE CITY OF KIRKLAND. ALSO, ALL INTERCEPTOR SWALES SHALL BE CLEANED IF SILT ACCUMULATION EXCEEDS ONE-QUARTER DEPTH.
28. PRIOR TO THE OCTOBER 1 OF EACH YEAR (THE BEGINNING OF THE WET SEASON), ALL DISTURBED AREAS SHALL BE REVIEWED TO IDENTIFY WHICH ONES CAN BE SEEDED IN PREPARATION FOR THE WINTER RAINS. THE IDENTIFIED DISTURBED AREA SHALL BE SEEDED WITHIN ONE WEEK AFTER OCTOBER 1. A SITE PLAN DEPICTING THE AREAS TO BE SEEDED AND THE AREAS TO REMAIN UNCOVERED SHALL BE SUBMITTED TO THE PUBLIC WORKS CONSTRUCTION INSPECTOR. THE INSPECTOR CAN REQUIRE SEEDING OF ADDITIONAL AREAS IN ORDER TO PROTECT SURFACE WATERS, ADJACENT PROPERTIES, OR DRAINAGE FACILITIES.
29. ANY AREA TO BE USED FOR INFILTRATION OR PERVIOUS PAVEMENT (INCLUDING A 5-FOOT BUFFER) MUST BE SURROUNDED BY SILT FENCE PRIOR TO CONSTRUCTION AND UNTIL FINAL STABILIZATION OF THE SITE TO PREVENT SOIL COMPACTION AND SILTATION BY CONSTRUCTION ACTIVITIES.
30. IF THE TEMPORARY CONSTRUCTION ENTRANCE OR ANY OTHER AREA WITH HEAVY VEHICLE LOADING IS LOCATED IN THE SAME AREA TO BE USED FOR INFILTRATION OR PERVIOUS PAVEMENT, 6" OF SEDIMENT BELOW THE GRAVEL SHALL BE REMOVED PRIOR TO INSTALLATION OF THE INFILTRATION FACILITY OR PERVIOUS PAVEMENT (TO REMOVE FINES ACCUMULATED DURING CONSTRUCTION).
31. ANY CATCH BASINS COLLECTING RUNOFF FROM THE SITE, WHETHER THEY ARE ON OR OFF THE SITE, SHALL HAVE ADEQUATE PROTECTION FROM SEDIMENT. CATCH BASINS DIRECTLY DOWNSTREAM OF THE CONSTRUCTION ENTRANCE OR ANY OTHER CATCH BASIN AS DETERMINED BY THE CITY INSPECTOR SHALL BE PROTECTED WITH A "STORM DRAIN PROTECTION INSERT" OR EQUIVALENT.
32. IF A SEDIMENT POND IS NOT PROPOSED, A BAKER TANK OR OTHER TEMPORARY GROUND AND/ OR SURFACE WATER STORAGE TANK MAY BE REQUIRED DURING CONSTRUCTION, DEPENDING ON WEATHER CONDITIONS.
33. DO NOT FLUSH CONCRETE BY-PRODUCTS OR TRUCKS NEAR OR INTO THE STORM DRAINAGE SYSTEM. IF EXPOSED AGGREGATE IS FLUSHED INTO THE STORM SYSTEM, IT COULD MEAN RE-CLEANING THE ENTIRE DOWNSTREAM STORM SYSTEM, OR POSSIBLY RE-LAYING THE STORM LINE.
34. RECYCLED CONCRETE SHALL NOT BE STOCKPILED ON SITE, UNLESS FULLY COVERED WITH NO POTENTIAL FOR RELEASE OF RUNOFF.

SANITARY SEWER

1. A PRE-CONSTRUCTION CONFERENCE SHALL BE HELD PRIOR TO THE START OF CONSTRUCTION. THE CONTRACTOR SHALL BE RESPONSIBLE FOR SECURING ALL NECESSARY PERMITS PRIOR TO CONSTRUCTION.
2. ALL CONSTRUCTION AND MATERIALS SHALL CONFORM TO CITY OF KIRKLAND DEPARTMENT OF PUBLIC WORKS AND CURRENT WSDOT/APWA STANDARDS AND SPECIFICATIONS FOR ROAD, BRIDGE, AND MUNICIPAL CONSTRUCTION.
3. APPROXIMATE LOCATIONS OF EXISTING UTILITIES HAVE BEEN OBTAINED FROM AVAILABLE RECORDS AND ARE SHOWN FOR CONVENIENCE. THE CONTRACTOR SHALL BE RESPONSIBLE FOR VERIFICATION OF THE LOCATIONS SHOWN AND FOR DISCOVERY OF POSSIBLE ADDITIONAL UTILITIES NOT SHOWN SO AS TO AVOID DAMAGE OR DISTURBANCE. THE UNDERGROUND UTILITY LOCATION SERVICE SHALL BE CONTACTED FOR FIELD LOCATION PRIOR TO ANY CONSTRUCTION. THE OWNER OR THEIR REPRESENTATIVE SHALL BE CONTACTED IF A UTILITY CONFLICT EXISTS. FOR UTILITY LOCATION IN KING COUNTY, CALL 1-800-424-5555. THE CONTRACTOR IS RESPONSIBLE TO ENSURE THAT UTILITY LOCATES ARE MAINTAINED THROUGHOUT THE LIFE OF THE PROJECT.
4. IT SHALL BE THE CONTRACTOR'S RESPONSIBILITY TO COORDINATE THEIR ACTIVITIES WITH LOCAL UTILITY COMPANIES TO ENSURE THAT ALL UTILITIES ARE INSTALLED ACCORDING TO THESE PLANS AND THE REQUIREMENTS OF THE INDIVIDUAL UTILITY COMPANIES.
5. PER COK PRE-APPROVED PLANS CK-S.16 AND CK-S.16A, ALL MANHOLES SHALL CONFORM TO WSDOT/APWA STANDARDS, ECCENTRIC CONES WITH MANUFACTURER-APPROVED GASKETS AND 1/2" POLYPROPYLENE-ENCAPSULATED SAFETY STEPS AND LADDERS. ALL MANHOLES SHALL HAVE CAST IRON RINGS AND DUCTILE IRON COVERS. LIDS SHALL CONFORM TO PRE-APPROVED PLANS CK-S.16 AND/ OR CK-S.16A.
6. ALL MAIN-LINE TRENCHES SHALL BE COMPACTED PRIOR TO TESTING SEWER LINES FOR ACCEPTANCE.
7. PRESSURE TESTING OF GRAVITY SEWER MAINS SHALL CONFORM TO THE FOLLOWING STANDARDS: (1) AIR TESTING WILL REQUIRE A MINIMUM OF 4 PSI FOR 15 MINUTES WITH NO PRESSURE DROP; (2) WATER TESTING WILL REQUIRE A MINIMUM OF 10' OF HEAD IN A STANDPIPE AT THE TEST LOCATION FOR 15 MINUTES WITH NO DROP IN THE WATER LEVEL IN THE STANDPIPE. EITHER TEST IS ACCEPTABLE.
8. PRESSURE TESTING OF FORCE MAINS AND LATERALS WILL REQUIRE AN AIR TEST OF 25 PSI MINIMUM FOR 15 MINUTES WITH NO PRESSURE DROP.
9. NEW CONNECTIONS TO EXISTING MANHOLES OR SEWER LINES SHALL BE SEALED OFF UNTIL UPSTREAM CONSTRUCTION IS FINISHED, TESTED, CLEANED, AND ACCEPTED. ALL CONSTRUCTION DEBRIS AND WATER SHALL BE REMOVED PRIOR TO OPENING THE SEAL.
10. ALL PVC SEWER PIPE AND FITTINGS SHALL MEET THE REQUIREMENTS OF ASTM SPECIFICATIONS D-3034 FOR 4" TO 15" DIAMETER AND ASTM F679 FOR 18" TO 27" DIAMETER. PIPE SHALL BE SDR-35 AND SHALL CONFORM TO STANDARD SPECIFICATIONS. BEDDING AND BACKFILL SHALL MEET WSDOT AND APWA SPECIFICATIONS.
11. MINIMUM SLOPE FOR SIDE SEWERS SHALL BE TWO PERCENT (2%).
12. AN APPROVED COPY OF THE SEWER PLAN MUST BE ON SITE WHENEVER CONSTRUCTION IS IN PROGRESS.
13. PRIOR TO CONSTRUCTION OF SEWER LINES, THE NECESSARY LOT CORNERS MUST BE SET, AND THE CONTRACTOR SHALL BE RESPONSIBLE FOR THE VERIFICATION OF THE LOCATION OF PIPES, MANHOLES, AND INVERT ELEVATIONS.
14. PIPE ANCHORS, IF USED, SHALL BE INSTALLED; NOT OVER 36' CENTER TO CENTER ON GRADES FROM 20 PERCENT TO 35 PERCENT; NOT OVER 24' CENTER TO CENTER ON GRADES FROM 35 PERCENT TO 50 PERCENT; AND NOT OVER 16' CENTER TO CENTER ON GRADES 50 PERCENT AND GREATER.
15. ALL MANHOLES SHALL HAVE A MINIMUM OF 0.10' TO A MAXIMUM OF 1.00' DROP BETWEEN INVERT IN AND INVERT OUT.
16. PVC SEWER PIPE SHALL BE TESTED FOR DEFLECTION ACCORDING TO WSDOT/ APWA SPECIFICATIONS.
17. ALL TRENCH BACKFILL SHALL BE COMPACTED TO 95 PERCENT DENSITY IN ROADWAYS, ROADWAY SHOULDERS, ROADWAY PRISM AND DRIVEWAYS, AND 85 PERCENT DENSITY IN UNPAVED AREAS. ALL PIPE ZONE COMPACTION SHALL BE 95 PERCENT.
18. IT SHALL BE THE RESPONSIBILITY OF THE CONTRACTOR TO ADJUST ALL MANHOLE LIDS AND CLEANOUT LIDS TO MATCH FINAL ASPHALT ELEVATIONS IN ROADWAYS OR GROUND ELEVATIONS IN LANDSCAPED AREAS.
19. WHEN TYING INTO EXISTING MANHOLES THAT ARE BELOW MINIMUM STANDARDS, THE EXISTING MANHOLE MUST BE UPGRADED TO MEET CURRENT STANDARDS.
20. ALL NEW SEWER MAIN EXTENSIONS SHALL BE VIDEOED PRIOR TO FINAL ACCEPTANCE.
21. ALL FASTENERS (BOLTS, NUTS, WASHERS, ETC.) ON MANHOLE AND CATCH BASIN LIDS TO BE STANDARD SIZE. NO METRIC FASTENERS ALLOWED.

ROADWAY

1. ALL ROADWAY WORK AND MATERIAL SHALL BE IN ACCORDANCE WITH THE CURRENT APWA AND CITY OF KIRKLAND STANDARDS AND SPECIFICATIONS.
2. ALL PUBLIC ROADWAYS SHALL BE CONSTRUCTED OF 2" CLASS "B" AC PAVING ON 4" ASPHALT-TREATED BASE (ATB), UNLESS OTHERWISE APPROVED BY THE PUBLIC WORKS DEPARTMENT.
3. A COPY OF THE APPROVED ROADWAY PLANS MUST BE ON THE JOB SITE WHENEVER CONSTRUCTION IS IN PROGRESS.
4. DENSITY TEST REPORTS WILL BE REQUIRED FOR ALL PUBLIC ROADWAYS AND ALL PRIVATE ROADWAYS WITHIN PLATS. ALL TRENCH BACKFILL SHALL BE COMPACTED TO 95 PERCENT DENSITY IN ROADWAYS, ROADWAY SHOULDERS, ROADWAY PRISM AND DRIVEWAYS, AND 85 PERCENT DENSITY IN UNPAVED AREAS. ALL PIPE ZONE COMPACTION SHALL BE 95 PERCENT.
5. ANY ROADWAY SIGNAGE OR STRIPING REMOVED OR TEMPORARILY MOVED BY THE CONTRACTOR SHALL BE RESTORED TO MEET THE CURRENT CITY OF KIRKLAND STANDARDS.
6. IT IS THE RESPONSIBILITY OF THE CONTRACTOR TO PROVIDE ADEQUATE TEMPORARY TRAFFIC CONTROL TO ENSURE TRAFFIC SAFETY DURING CONSTRUCTION ACTIVITIES. THEREFORE, THE CONTRACTOR SHALL SUBMIT A TRAFFIC CONTROL PLAN TO THE PUBLIC WORKS DEPARTMENT AT LEAST 48 HOURS PRIOR TO STARTING ANY WORK IN THE RIGHT-OF-WAY. ALL TRAFFIC CONTROL DEVICES SHALL CONFORM TO THE "MANUAL ON UNIFORM TRAFFIC CONTROL DEVICES" (MUTCD) OR AS MODIFIED BY THE TRAFFIC ENGINEER.
7. MEASURES SHALL BE TAKEN BY THE DEVELOPER TO PROVIDE GROUND COVER IN AREAS WITHIN THE RIGHT-OF-WAY WHICH HAVE BEEN STRIPPED OF NATURAL VEGETATION OR HAVE A POTENTIAL FOR EROSION.
8. ANY EXISTING PUBLIC IMPROVEMENTS DAMAGED DURING CONSTRUCTION SHALL BE REPLACED PRIOR TO FINAL INSPECTION.
9. THE CONTRACTOR IS RESPONSIBLE FOR KEEPING ALL PUBLIC STREETS FREE FROM MUD AND DEBRIS AT ALL TIMES. THE CONTRACTOR SHALL BE PREPARED TO USE POWER SWEEPERS OR OTHER PIECES OF EQUIPMENT NECESSARY TO KEEP THE ROADWAYS CLEAN.
10. BACKFILL IN ALL STREET CUTS ON ARTERIALS WILL BE CONTROL DENSITY FILL (CDF). CONTRACTOR MUST PROVIDE STEEL PLATING NECESSARY TO ALLOW THE CDF TO CURE.
11. ALL ROCKERIES MUST BE CONSTRUCTED IN ACCORDANCE WITH THE MOST CURRENT GUIDELINES OF THE ASSOCIATION.

Know what's below. Call 811 before you dig.

DATE	NO.	REVISION	BY
X/X/X	0	BID SET	

APPROVED BY:

Rob English, PE

DATE: 3/3/2026

Ben Mahony (DESIGNED BY)	2/26/2026 (DATE)
Ben Mahony (DRAWN BY)	2/26/2026 (DATE)
I-Wen Yang, PE (REVIEWED BY)	2/26/2026 (DATE)

CITY OF KIRKLAND WASHINGTON

CITY OF KIRKLAND
DEPARTMENT OF PUBLIC WORKS
123 FIFTH AVENUE KIRKLAND, WA 98033
(425) 587-3800 www.kirklandwa.gov

SCADA REPLACEMENT

STANDARD PLAN NOTES

REFERENCE SHEET NO. SPN_01

Water Pump Stations:

Site #1 - North Reservoir – 10655 132nd Ave NE, Kirkland, WA 98033

Site #2 - South Reservoir – 13013 NE 65th St, Kirkland, WA 98033

Site #3 - P1 – 12230 NE 116th St, Kirkland, WA 98034

Site #4 - S1 – NE 69th and 140th Ave NE

Site #5 - S2 – 13205 NE 85th St, Kirkland WA 98033

Site #6 - K1 – NE 60th and 114th Ave, Kirkland WA 98033

Site #7 - S3 – 11615 132nd Ave, Kirkland WA 98034

Site #8 - K2 – 11513 NE 87th St, Kirkland, WA 98033

Site #9 - K4 – 11520 120th Ave NE, Kirkland, WA 98033

Sanitary Sewer Lift Stations:

Site #10 - Rose Point LS – 1803 10th Pl W, Kirkland, WA 98033

Site #11 - Waverly LS – 633 Waverly Way, Kirkland, WA 98033

Site #12 - Lake Plaza LS – 9 Lakeshore Plaza, Kirkland, WA 98033

Site #13 - Yarrow Bay LS – 3711 101st Way NE, Kirkland, WA 98033

Site #14 - South Bay LS – 3901 97th Ave NE, Kirkland, WA 98033

MTU Network Panel:

Site #15 - MTU Network Panel - 915 8th St, Kirkland, WA 98033

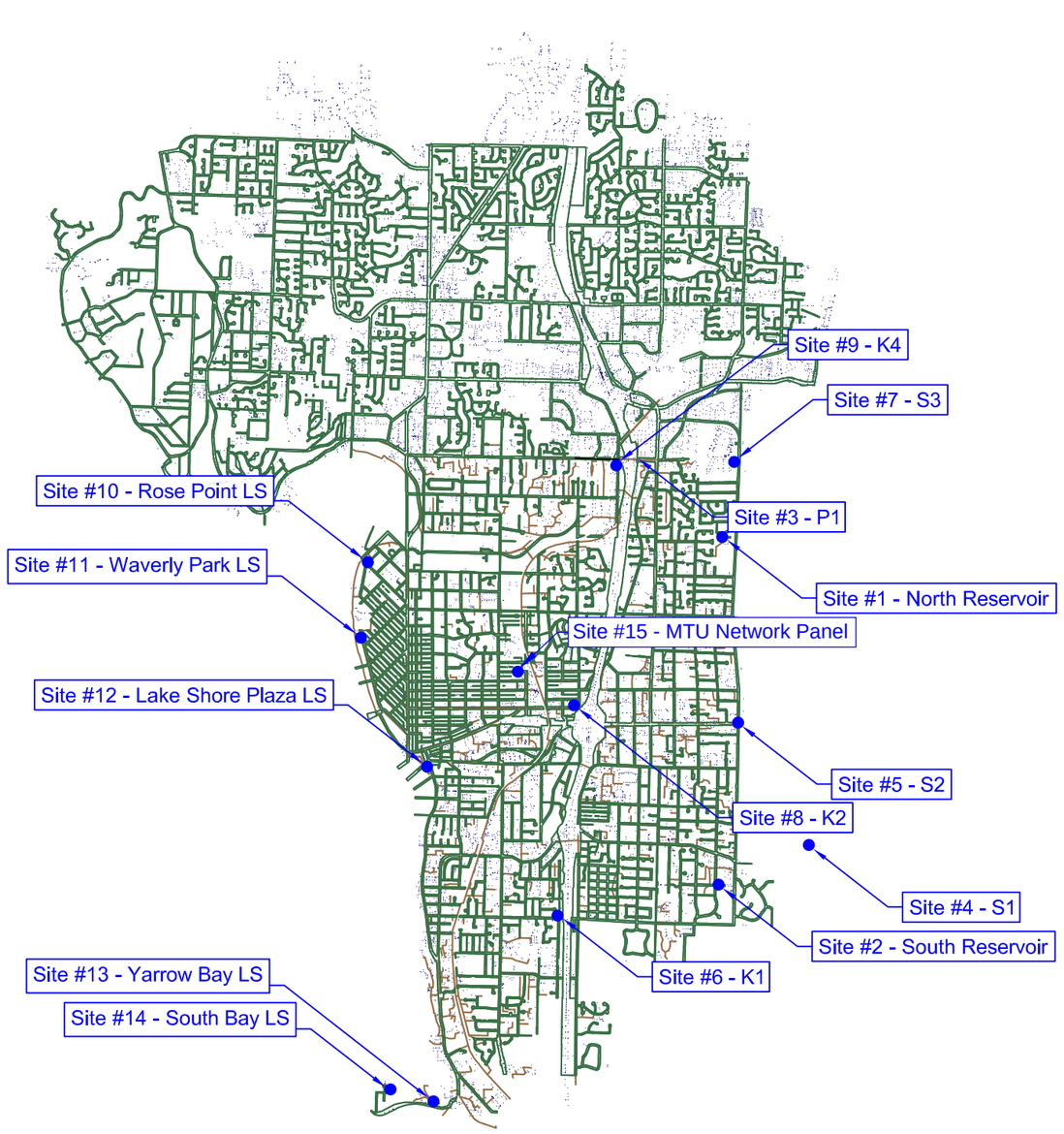

Know what's below. Call 811 before you dig.

DATE	NO.	REVISION	BY
X/X/X	0	BID SET	

APPROVED BY:

Rob English, PE

DATE: 3/3/2026

Ben Mahony	DESIGNED BY	2/26/2026 DATE
Ben Mahony	DRAWN BY	2/26/2026 DATE
I-Wen Yang, PE	REVIEWED BY	2/26/2026 DATE

CITY OF KIRKLAND WASHINGTON

CITY OF KIRKLAND

DEPARTMENT OF PUBLIC WORKS
123 FIFTH AVENUE KIRKLAND, WA 98033
(425) 587–3800 www.kirklandwa.gov

SCADA REPLACEMENT

MASTER KEY PLAN

REFERENCE SHEET NO.
MKP_01

SHEET
4
of
366

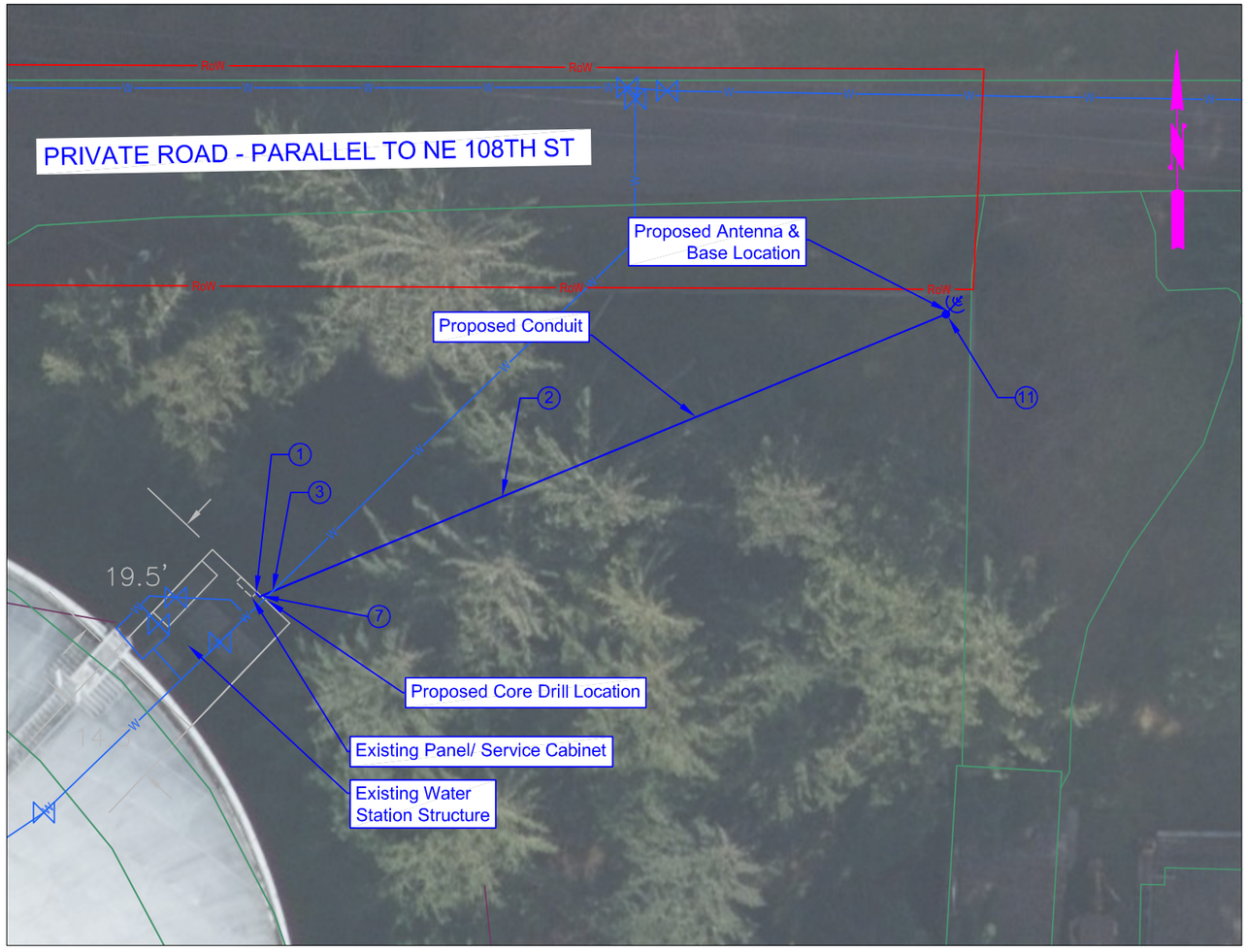

SITE: North Reservoir
UTILITY: Water
PROJECT ADDRESS: 10655 132nd Ave NE, Kirkland, WA 98033

GIS DISCLAIMER:
The as-built and utility information shown in the project plans are based on the City of Kirkland's available GIS information. Thus, the contractor shall field verify all of the proposed conditions and limits. Additionally, the contractor shall call for utility locates at least 48 hours prior to any trenching or excavation work to field verify that no utility conflicts exist with the proposed excavation limits.

20 10 0 20 40

A SOUTH-WEST VIEW
NOT TO SCALE

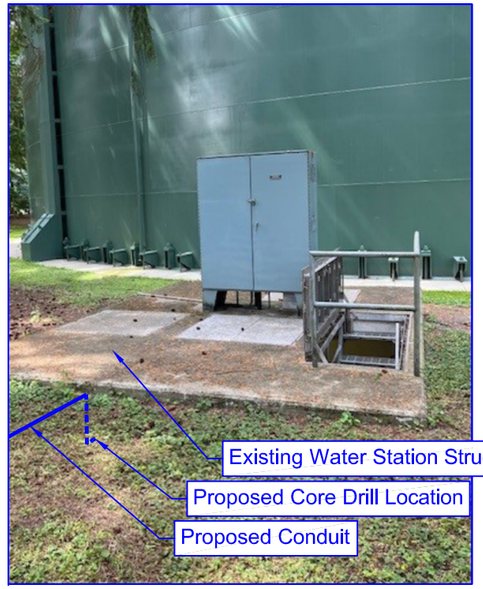

B NORTH-EAST VIEW
NOT TO SCALE

CONSTRUCTION NOTES:

1. TO REPLACE PANEL AND UPDATE THE SOFTWARE IN THE SERVICE CABINET PER THE SITE-SPECIFIC BILL OF MATERIALS (BOM'S).
2. TO INSTALL 4-INCH SCH. 40 CONDUIT PIPING AND REPLACE BACKFILL WITH NATIVE SOILS, IN KIND.
3. TO PROTECT EXISTING BURIED UTILITY, SEE GENERAL NOTE 1.
4. TO PROTECT EXISTING BURIED POWER AND/ OR FRANCHISE UTILITY, SEE GENERAL NOTE 1.
5. TO INSTALL FIBER CABLE THROUGH EXISTING FIBER CONDUIT.
6. TO REMOVE AND REPLACE CONCRETE SIDEWALK.
7. TO CORE-DRILL HOLE(S) INTO EXISTING STRUCTURE AND/ OR EXISTING SERVICE CABINET.
8. TO INSTALL EXTERNAL MOUNTED LOW-PROFILE (4 FT HIGH POLE HEIGHT) ANTENNA PER ANTENNA STANDARD DETAIL.
9. TO INSTALL EXTERNAL MOUNTED HIGH-PROFILE (20 FT HIGH POLE HEIGHT) ANTENNA PER ANTENNA STANDARD DETAIL.
10. TO INSTALL INTERNAL PANEL-MOUNTED LOW-PROFILE (2 FT HIGH POLE HEIGHT) ANTENNA PER ANTENNA STANDARD DETAIL.
11. TO INSTALL FULL-PROFILE (20 FT HIGH POLE HEIGHT) ANTENNA WITH A CONCRETE ANCHOR PER ANTENNA AND ANTENNA BASE STANDARD DETAIL.
12. TO SALVAGE AND REUSE EXISTING ANTENNA STRUCTURE AND INSTALL PROPOSED ANTENNA EQUIPMENT.
13. TO REMOVE EXISTING YAGI ANTENNA ON THE EXISTING ANTENNA POLE STRUCTURE.
14. TO INSTALL NEMA 4X ENCLOSURE ON PROPOSED OR EXISTING ANTENNA POLE STRUCTURE WITH THE NEW MODEM INSIDE THE ENCLOSURE.
15. TO INSTALL FIBER CONNECTION IN EXISTING FIBER CONDUIT.
16. TO INSTALL FIBER CONNECTION IN EXISTING SIGNAL CABINET/ JUNCTION BOX.

GENERAL NOTES:

1. UTILITY LOCATIONS SHOWN ARE APPROXIMATE AND BASED ON AVAILABLE GIS, FIELD OBSERVATIONS, AND UTILITY LOCATES. CONTRACTOR SHALL VERIFY PRIOR TO CONSTRUCTION.
2. SEWER STRUCTURE DATA AND LOCATIONS SHOWN ARE APPROXIMATE BASED ON AVAILABLE CITY GIS AND AS-BUILT RECORDS. THE CONTRACTOR SHALL CONDUCT PIPE AND SITE VERIFICATION PRIOR TO PROCEEDING WITH CONSTRUCTION.
3. CITY SHALL COORDINATE AND SECURE ANY NECESSARY AGREEMENTS AND/ OR EASEMENT WITH PROPERTY PRIOR TO ANY WORK ON PRIVATE PROPERTY. NO WORK SHALL BE PERFORMED OUTSIDE OF THE RIGHT-OF-WAY WITHOUT PRIOR AUTHORIZATION BY THE ENGINEER.
4. IF DISTURBED, HMA PAVEMENT SECTION SHALL BE REPLACED PER PRE-APPROVED PLAN NO. CK-R.12.

LEGEND:

- PROPOSED CONDUIT INSTALLATION
- PROPOSED FIBER INSTALLATION
- PROPOSED ANTENNA & BASE LOCATION
- PROPOSED REMOVAL/ REPLACEMENT OF SIDEWALK
- EXISTING STRUCTURE
- EXISTING STRUCTURE (HIDDEN)
- SS — EXISTING SANITARY SEWER UTILITY
- EXISTING SANITARY SEWER MANHOLE
- SD — EXISTING STORM DRAIN PIPE
- EXISTING EXISTING STORM DRAIN CATCH BASIN
- W — EXISTING EXISTING WATER PIPE UTILITY
- EXISTING EXISTING WATER METER UTILITY
- EXISTING WATER HYDRANT
- EXISTING WATER VALVE UTILITY
- RoW — EXISTING RIGHT-OF-WAY LINE
- PL — EXISTING EXISTING PROPERTY LINE
- GAS — EXISTING GAS UTILITY
- EXISTING GAS METER UTILITY
- SITE IMAGE REF. SEE NOTE X

811 Know what's below. Call 811 before you dig.

DATE	NO.	REVISION	BY
X/X/X	0	BID SET	

APPROVED BY:

Rob English, PE

DATE: 3/3/2026

Ben Mahony	DESIGNED BY	2/26/2026 DATE
Ben Mahony	DRAWN BY	2/26/2026 DATE
I-Wen Yang, PE	REVIEWED BY	2/26/2026 DATE

CITY OF KIRKLAND
DEPARTMENT OF PUBLIC WORKS
123 FIFTH AVENUE KIRKLAND, WA 98033
(425) 587–3800 www.kirklandwa.gov

SCADA REPLACEMENT

NORTH RESERVOIR SITE IMPROVEMENTS

REFERENCE SHEET NO. NR_IMP_01

SHEET 5 of 366

NORTH RESERVOIR					
PartID	Qty	Specification	Manufacturer Part Number	Description	Manufacturer
117G	1	No Equal	CP3630	Concept Enclosure Backpan, Painted Mild Steel, 34.20" x 28.20"	Hoffman
143B	1	Or Approved Equal	111019-00	Temperature Control Switch, N.O. Contact for fan control or high temperature alarm, Adjustable Set Point Range 32-140 deg.F, 15-amp rated contact at 120VAC	Stego
200B	ASRQ	Or Approved Equal	3044102	Terminal Block, UT4, Gray, 26-10 AWG, 600V, 32A	Phoenix Contact
202A	ASRQ	Or Approved Equal	3047028	Terminal Block End Barrier, UT2.5/10 Terminals	Phoenix Contact
203A	ASRQ	Or Approved Equal	0800886	Terminal Block End Clamp, 9.5mm Wide	Phoenix Contact
210A	ASRQ	Or Approved Equal	1492-WFB424	Fuse Terminal Block, 5x20mm Fuse, Black, Red LED Indicator, 30-12 AWG, 15A @ 10-57VAC/VDC	Allen-Bradley
221A	ASRQ	Or Approved Equal	S500-250-R	Fuse, 0.25 A, Glass Body, 5x20mm, Fast Acting, 250VAC/60VDC	Bussmann
221B	ASRQ	Or Approved Equal	S500-500-R	Fuse, 0.5 A, Glass Body, 5x20mm, Fast Acting, 250VAC/60VDC	Bussmann
221D	ASRQ	Or Approved Equal	S500-2-R	Fuse, 2 A, Glass Body, 5x20mm, Fast Acting, 250VAC/60VDC	Bussmann
241C	ASRQ	Or Approved Equal	1489-M1C050	Miniature Circuit Breaker, 1-Pole, 5A, Din Rail Mount, 277VAC/48VDC Max, Trip Curve C, 10kA, UL 489 Listed	Allen-Bradley
241E	ASRQ	Or Approved Equal	1489-M1C100	Miniature Circuit Breaker, 1-Pole, 10A, Din Rail Mount, 277VAC/48VDC Max, Trip Curve C, 10kA, UL 489 Listed	Allen-Bradley
241H	ASRQ	Or Approved Equal	1489-M1C200	Miniature Circuit Breaker, 1-Pole, 20A, Din Rail Mount, 277VAC/48VDC Max, Trip Curve C, 10kA, UL 489 Listed	Allen-Bradley
241K	ASRQ	Or Approved Equal	1489-M1C300	Miniature Circuit Breaker, 1-Pole, 30A, Din Rail Mount, 277VAC/48VDC Max, Trip Curve C, 10kA, UL 489 Listed	Allen-Bradley
245A	1	Or Approved Equal	2907918	Surge Arrester, Pluggable Type, 150VAC/DC, 26A (20A for UL Applications)	Phoenix Contact
260A	1	Or Approved Equal	UGB2/0-414-6	Ground Bus Bar, Tin Plated Copper, 5" x 5/8", 14 - 4 AWG, 6-port	Panduit
290A	1	Or Approved Equal	2907161	UPS with integrated power supply, USB (Modbus/RTU), DIN rail mounting, Push-in connection, input: 1-phase, output: 24 V DC / 10 A	Phoenix Contact
290B	1	Or Approved Equal	1348516	Energy storage, VRLA-AGM, 24 V DC, 20 Ah, automatic detection and communication with QUINT UPS-IQ	Phoenix Contact
307B	ASRQ	Or Approved Equal	700-HK32Z24-4	Slim Line Control Relay, DPDT, 8A Contacts, 24 VDC Coil, Pilot Light	Allen-Bradley
307C	ASRQ	Or Approved Equal	700-HK32A1-4	Slim Line Control Relay, DPDT, 8A Contacts, 120 VAC Coil, Pilot Light	Allen-Bradley
307D	ASRQ	Or Approved Equal	700-HN122	Slim Line Control Relay Base, Mini 8-Blade Base Socket, Screw Terminals	Allen-Bradley
320A	1	Or Approved Equal	0804155	Receptacle, 15A/125VAC, DIN rail mounting, simplex	Phoenix Contact
322A	1	Or Approved Equal	5600462	Receptacle, GFCI, 15A/125VAC, DIN rail mounting, duplex	Phoenix Contact
430A	1	No Equal	IE-3100-8T2C-E	Cisco Catalyst IE3100 Rugged Series - Switch - 8 x 10/100/1000 + 2 x combo Gigabit - DIN rail mountable - PACL, VACL	Cisco
430B	1	No Equal	SD-IE-1GB	Cisco - Flash memory card - 1 GB - SD	Cisco
455A	1	No Equal	cMT3092Xv2	Smart HMI, 9.7", Resolution 1024 x 768, Dark Grey Bezel, 1.6 GHz CPU, 4 GB Flash Memory, 1 GB DRAM, UL Listed, Ethernet, 24VDC	Maple Systems
470A	1	No Equal	MAX-BR1-MINI-LTE-US-T-M-PRM	Peplink MAX BR1 Mini Core LTE - US - No WiFi - No GPS - AC Adapter & 2x SMA Cellular Anetenna Connectors	Peplink
470B	1	No Equal		DC Power Cable ES/GX/MP/RV/LX/IBR	Peplink
470C	1	No Equal	ACW-DIN-BR1-MINI	DIN Rail mount kit	Peplink
471A	2	Or Approved Equal	POLTSX-NFF	Cell Surge Arrestor 0.698-2.7GHz DC Block Coax Protect, N-Female/N-Female connector	PolyPhaser
471B	ASRQ	Or Approved Equal	TIMLMR-400-DB	Watertight LMR400 Cable Black PE Jacket	Times Microwave
471C	ASRQ	Or Approved Equal	R/FCOMP-NM-400	Conn, N-Male Compression Style for Plenum LMR400 Cable	RF Industries
471D	2	Or Approved Equal	ANXTRA6927M3PB-001	3G/4G Multi-Band Phantom Antenna for 698-960/1700-2700 MHz. Black. 3.3" Radome. N Female.	Laird
471E	2	Or Approved Equal	CUSTOM BRACKET	Stainless Steel Custom Bracket - 14"x 02"	Custom
610D	1	No Equal	BMXP342020	Modicon M340 PLC Processor, 1 Modbus Serial Port, 1 Ethernet Port, Max 1024 Discrete & 256 Analog IO	Schneider Electric
611B	1	No Equal	BMXXBP0600	Modicon X80 I/O Platform X-Bus Rack, 6 Slots	Schneider Electric
612A	1	No Equal	BMXCPS2010	Modicon X80 I/O Platform Power Supply, 17W Output, 24 VDC	Schneider Electric
614B	1	No Equal	BMXDDI1602	Modicon X80 Discrete Input Card, 16 Points, 24 VDC	Schneider Electric
615E	1	No Equal	BMXDRA1605	Modicon X80 Relay Output Card, 16 Points, 24 VDC / 24-240 VAC, 2A Max	Schneider Electric
616C	1	No Equal	BMXAMI0810	Modicon X80 Analog Input Module, 8 Points, Voltage/Current, Isolated	Schneider Electric
619C	2	No Equal	BMXFTB2010	Modicon X80 Removable Terminal Block, 20-Way, Screw Terminals	Schneider Electric
619E	1	No Equal	BMXFTB2800	Modicon X80 Removable Terminal Block, 28-Way, Screw Terminals	Schneider Electric

811 Know what's below. Call 811 before you dig.

DATE	NO.	REVISION	BY
X/X/X	0	BID SET	

APPROVED BY:

Rob English, PE

DATE: 3/3/2026

Ben Mahony DESIGNED BY 2/26/2026 DATE

Ben Mahony DRAWN BY 2/26/2026 DATE

I-Wen Yang, PE REVIEWED BY 2/26/2026 DATE

CITY OF KIRKLAND WASHINGTON

CITY OF KIRKLAND
DEPARTMENT OF PUBLIC WORKS
123 FIFTH AVENUE KIRKLAND, WA 98033
(425) 587–3800 www.kirklandwa.gov

SCADA REPLACEMENT

NORTH RESERVOIR - BILL OF MATERIALS

REFERENCE SHEET NO. NR_BM_01

		PANEL NAME:	NORTH RESERVOIR RTU															
		PANEL NUMBER:	NR															
TAG Prefix	Loop Desc. 1	Loop Desc. 2	LOOP #	PLC/HMI Tag	DESCRIPTION 1	DESCRIPTION 2	DESCRIPTION 3	FUNCTION	TYPE	Rack	Slot	Point	Units	Min	Max	P&ID Dwg	NOTES
			-		Spare				DI	1	1	0					Moved from original IO list - 4/4/25 KD
			-		Spare				DI	1	1	1					Moved from original IO list - 4/4/25 KD
			-		TANK VALVE			CLOSED	DI	1	1	2					
			-		PUMP CONTROL	VALVE		CLOSED	DI	1	1	3					Moved from original IO list - 4/4/25 KD
			-		WELL PUMP			RUNNING	DI	1	1	4					Moved from original IO list - 4/4/25 KD
			-		REMOTE HOA			IN AUTO	DI	1	1	5					Moved from original IO list - 4/4/25 KD
			-		SMOKE			DETECTION	DI	1	1	6					
			-		INTRUSION			ALARM	DI	1	1	7					
			-		Spare				DI	1	1	8					Moved from original IO list - 4/4/25 KD
			-		FLOOD SWITCH			ALARM	DI	1	1	9					Moved from original IO list - 4/4/25 KD
			-		PANIC			ALARM	DI	1	1	10					Moved from original IO list - 4/4/25 KD
			-		Spare				DI	1	1	11					
			-		120VAC Control Power			Fail	DI	1	1	12					Moved from original IO list - 4/4/25 KD
			-		24VDC Control Power			Fail	DI	1	1	13					Moved from original IO list - 4/4/25 KD
			-		DC UPS			On Battery	DI	1	1	14					Moved from original IO list - 4/4/25 KD
			-		DC UPS			Alarm	DI	1	1	15					Moved from original IO list - 4/4/25 KD
			-		PUMP			CALL	DO	1	2	0					
			-		Spare				DO	1	2	1					
			-		Spare				DO	1	2	2					
			-		545 ZONE HYDRAULIC	CONTROL VALVE NO.1	SOLENOID	OPEN CALL	DO	1	2	3					
			-		545 ZONE HYDRAULIC	CONTROL VALVE NO.1	SOLENOID	CLOSE CALL	DO	1	2	4					
			-		545 ZONE HYDRAULIC	CONTROL VALVE NO.1	SOLENOID PRESSURE REDUCING	CALL	DO	1	2	5					
			-		545 ZONE HYDRAULIC	CONTROL VALVE NO.2	SOLENOID	OPEN CALL	DO	1	2	6					
			-		545 ZONE HYDRAULIC	CONTROL VALVE NO.2	SOLENOID	CLOSE CALL	DO	1	2	7					
			-		Spare				DO	1	2	8					
			-		Spare				DO	1	2	9					
			-		Spare				DO	1	2	10					
			-		Spare				DO	1	2	11					
			-		Spare				DO	1	2	12					
			-		Spare				DO	1	2	13					
			-		Spare				DO	1	2	14					
			-		Spare				DO	1	2	15					
			-		545 ZONE	TRANSMITTER		PRESSURE	AI	1	3	0	PSI	0	400		
			-		NORTH RESERVOIR			LEVEL	AI	1	3	1	PSI	0	XX		
			-		545 ZONE			FLOW	AI	1	3	2	GPM	0	XX		
			-		Spare				AI	1	3	3					
			-		Spare				AI	1	3	4					
			-		Spare				AI	1	3	5					
			-		Spare				AI	1	3	6					
			-		Spare				AI	1	3	7					

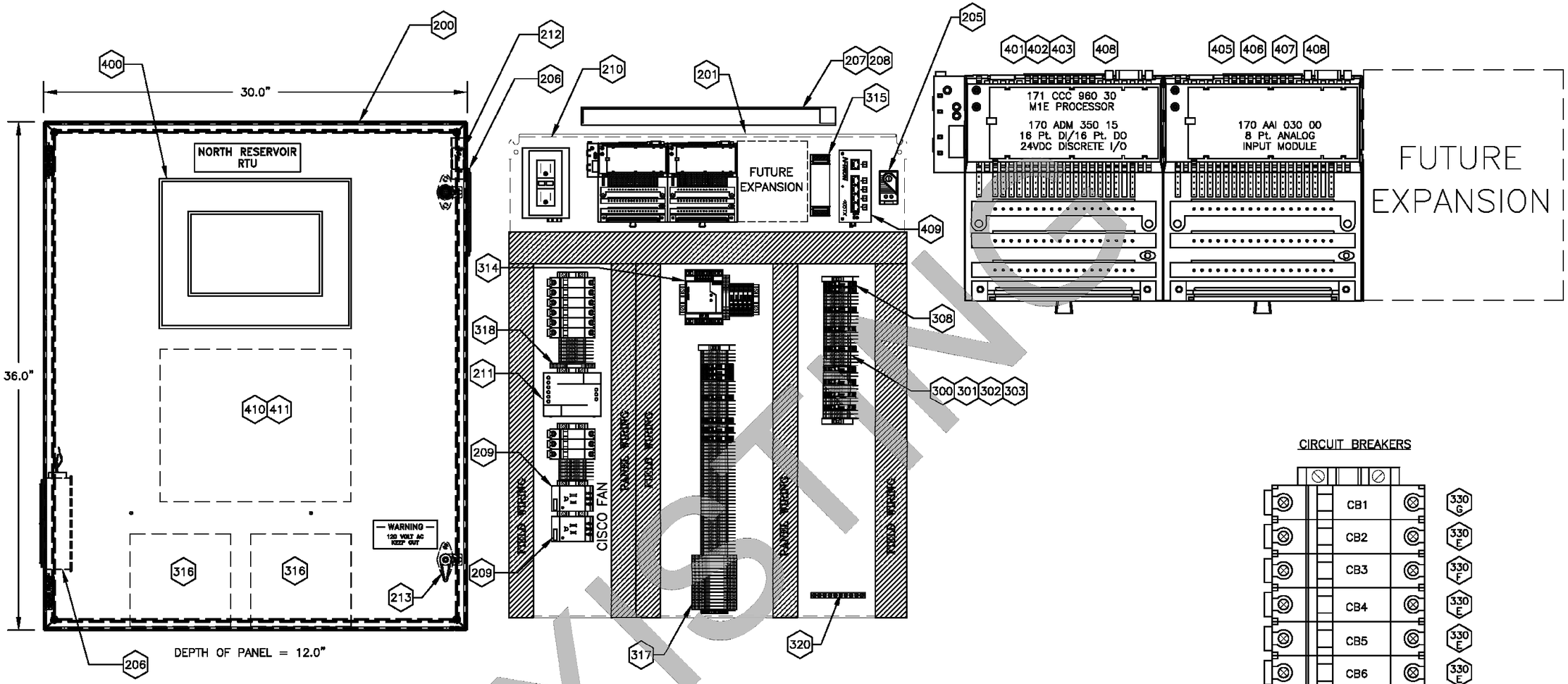

CIRCUIT BREAKERS

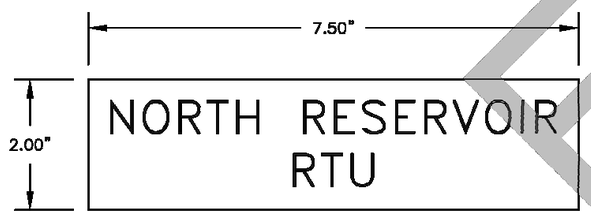

BLACK MATTE PHENOLIC WITH WHITE 1/2" LETTERING

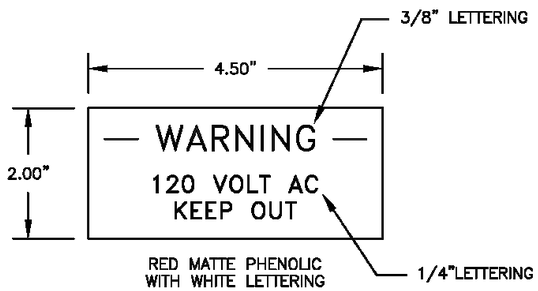

RED MATTE PHENOLIC
WITH WHITE LETTERING

EXISTING

Know what's below. Call 811 before you dig.

DATE	NO.	REVISION	BY
X/X/X	0	BID SET	

APPROVED BY:

Rob English, PE

DATE: 3/3/2026

Ben Mahony	DESIGNED BY	2/26/2026 DATE
Ben Mahony	DRAWN BY	2/26/2026 DATE
I-Wen Yang, PE	REVIEWED BY	2/26/2026 DATE

CITY OF KIRKLAND

DEPARTMENT OF PUBLIC WORKS
123 FIFTH AVENUE KIRKLAND, WA 98033
(425) 587-3800 www.kirklandwa.gov

TELEMETRY PANEL - POWER WIRING DIAGRAM (1)

SCADA REPLACEMENT

NORTH RESERVOIR EXISTING CONTROL PANEL (REFERENCE)

REFERENCE SHEET NO.
NR-J01

SHEET 8 of 366

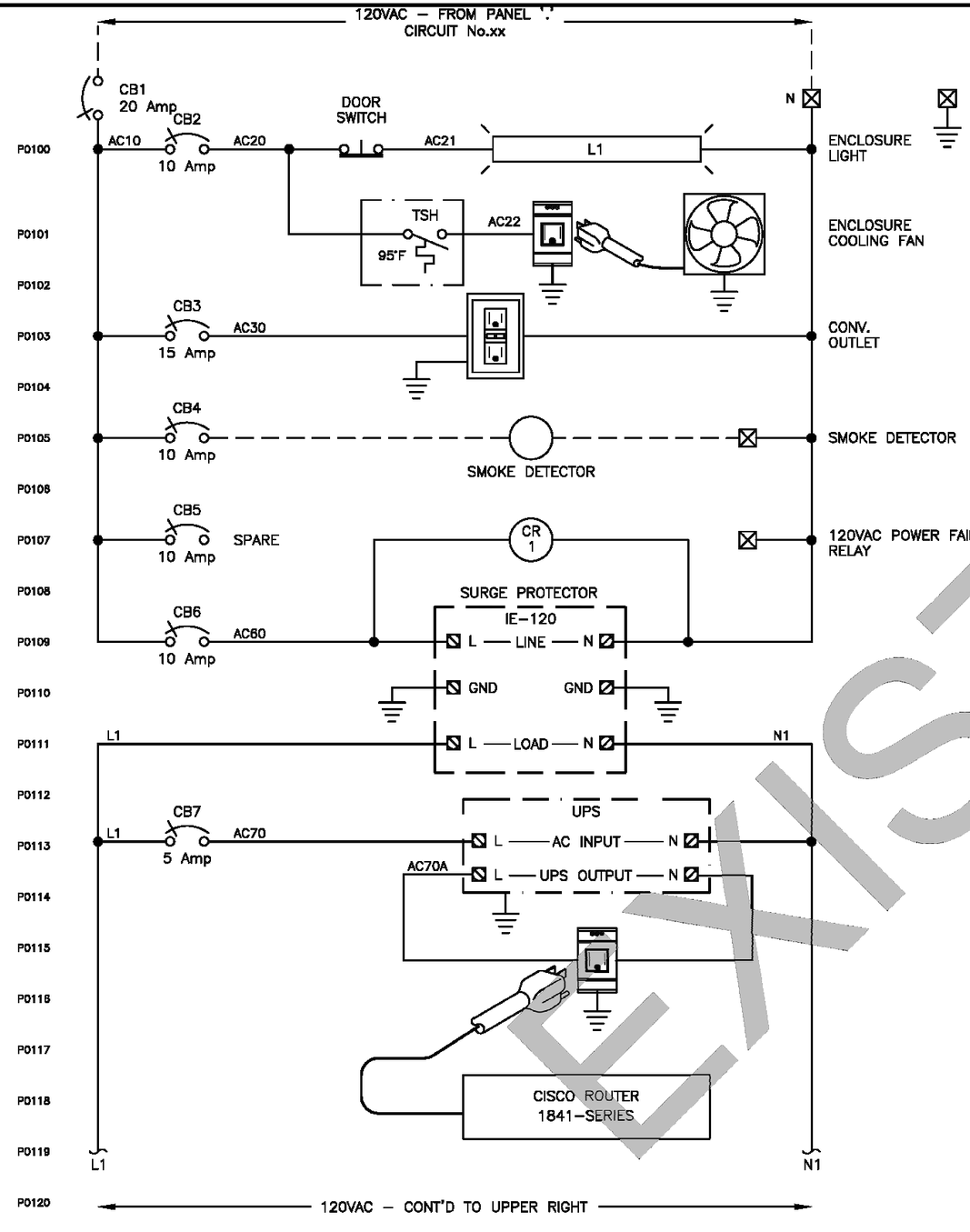

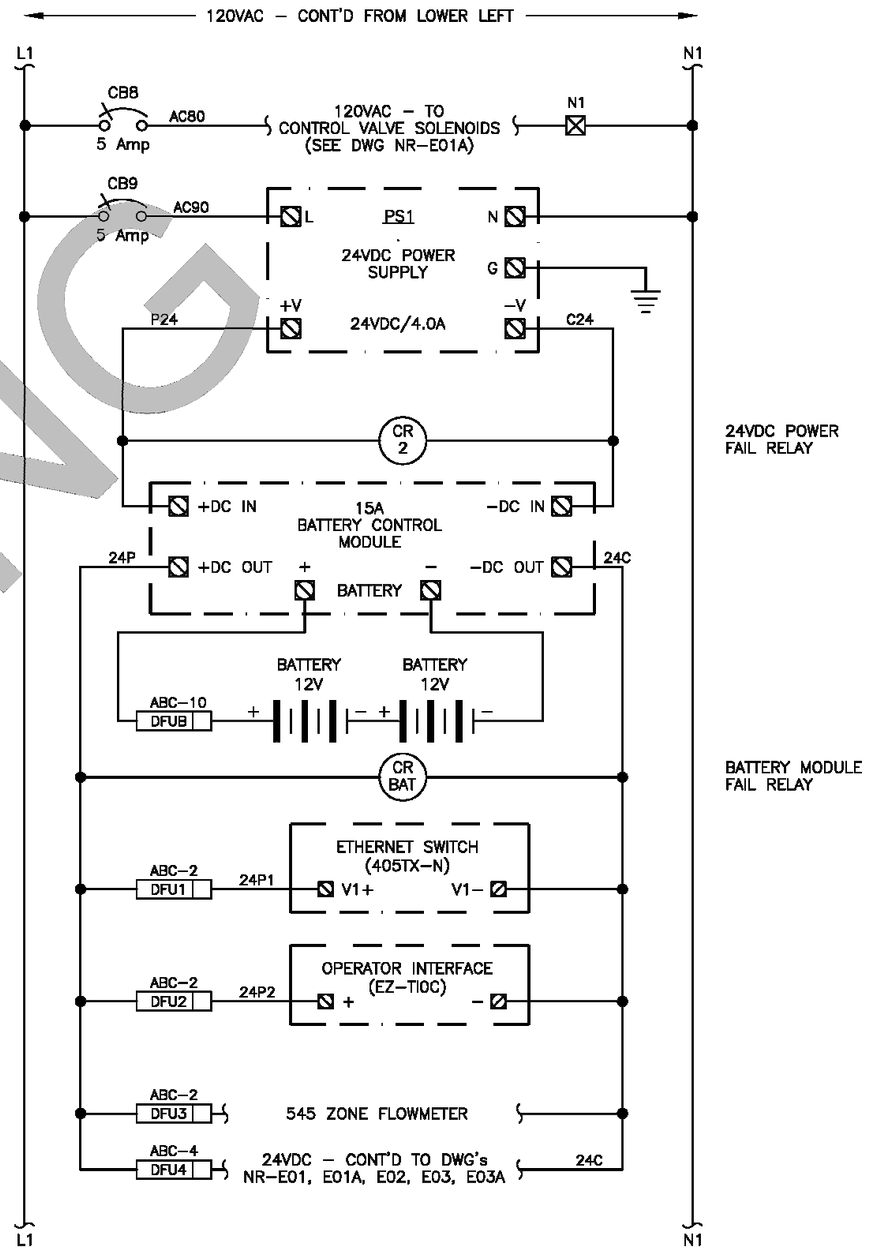

EXISTING

Know what's below. Call 811 before you dig.

DATE	NO.	REVISION	BY
X/X/X	0	BID SET	

APPROVED BY:

Rob English, PE

DATE: 3/3/2026

Ben Mahony (DESIGNED BY)	2/26/2026 (DATE)	
Ben Mahony (DRAWN BY)	2/26/2026 (DATE)	
I-Wen Yang, PE (REVIEWED BY)	2/26/2026 (DATE)	

CITY OF KIRKLAND
WASHINGTON

CITY OF KIRKLAND
DEPARTMENT OF PUBLIC WORKS
123 FIFTH AVENUE KIRKLAND, WA 98033
(425) 587–3800 www.kirklandwa.gov

TELEMETRY PANEL - POWER WIRING DIAGRAM (2)

SCADA REPLACEMENT

NORTH RESERVOIR EXISTING CONTROL PANEL (REFERENCE)

REFERENCE SHEET NO.
NR-P01

SHEET 9 of 366

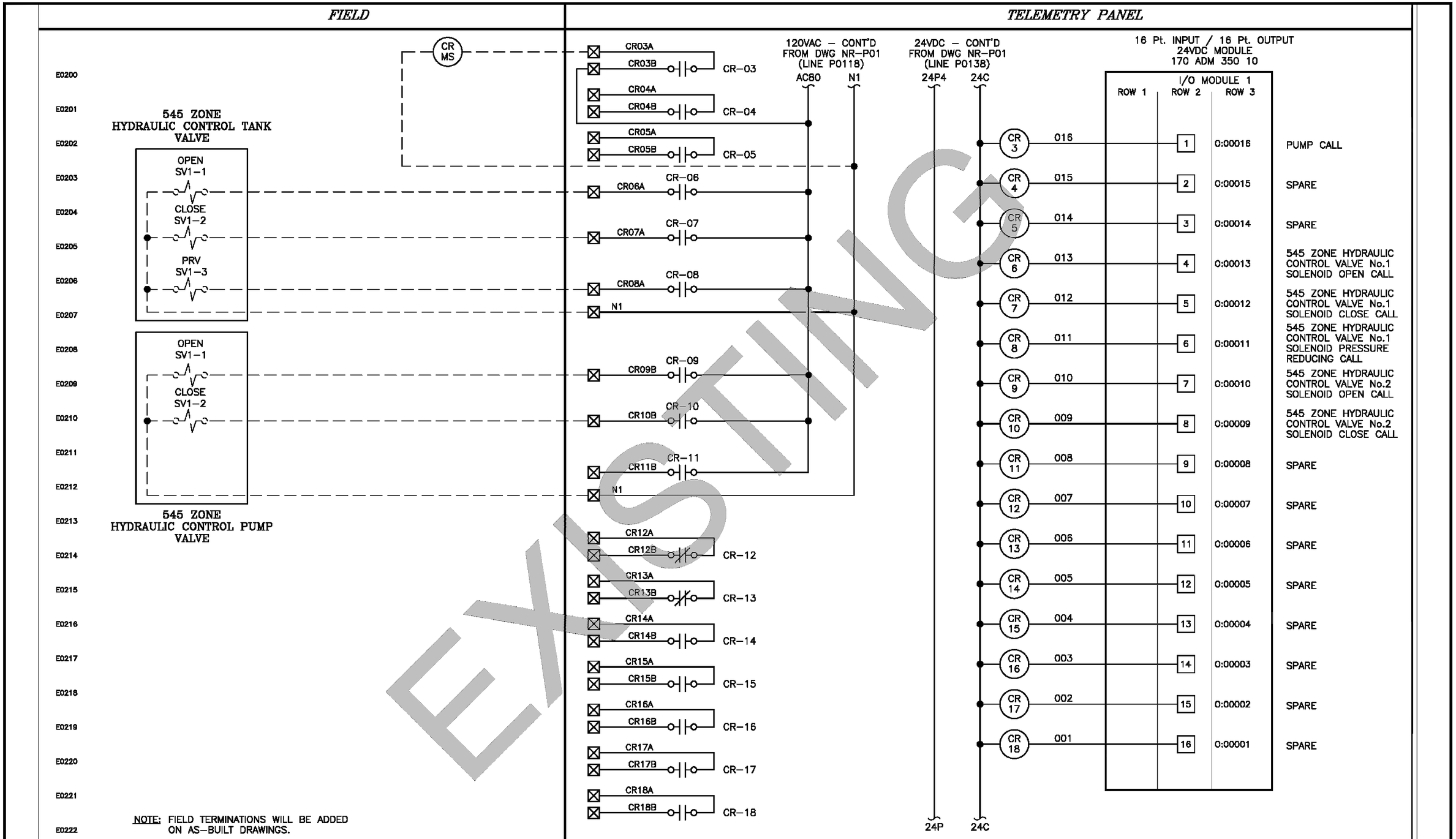

EXISTING

811 Know what's below. Call 811 before you dig.

DATE	NO.	REVISION	BY
X/X/X	0	BID SET	

APPROVED BY:

Rob English, PE

DATE: 3/3/2026

Ben Mahony — DESIGNED BY — 2/26/2026 DATE

Ben Mahony — DRAWN BY — 2/26/2026 DATE

I-Wen Yang, PE — REVIEWED BY — 2/26/2026 DATE

CITY OF KIRKLAND WASHINGTON

CITY OF KIRKLAND
DEPARTMENT OF PUBLIC WORKS
123 FIFTH AVENUE KIRKLAND, WA 98033
(425) 587-3800 www.kirklandwa.gov

TELEMETRY PANEL - I/O MODEL 1 (INPUTS) - CONTROL WIRING DIAGRAM

SCADA REPLACEMENT

NORTH RESERVOIR EXISTING CONTROL PANEL (REFERENCE)

REFERENCE SHEET NO. NR-E01A

SHEET 10 of 366

FIELD

TELEMETRY PANEL

E0100
E0101
E0102
E0103
E0104
E0105
E0106
E0107
E0108
E0109
E0110
E0111
E0112
E0113
E0114
E0115
E0116
E0117
E0118
E0119
E0120
E0121
E0122

24VDC – CONT'D FROM DWG NR–P01 (LINE P0138)

24P4 24C

16 Pt. INPUT / 16 Pt. OUTPUT 24VDC MODULE 170 ADM 350 10

I/O MODULE 1

ROW 1	ROW 2	ROW 3		
18 L+				
17 M–				
	17 1L+	17 M–		
	18 2L+	18 M–		
1			I:00016	POWER FAIL 120VAC
2			I:00015	POWER FAIL 24VDC
3			I:00014	TANK VALVE CLOSED
4			I:00013	BATTERY MODULE FAIL
5			I:00012	PUMP CONTROL VALVE CLOSED
6			I:00011	WELL PUMP RUNNING
7			I:00010	SMOKE DETECTOR
8			I:00009	INTRUSION
9			I:00008	REMOTE HOA IN AUTO
10			I:00007	SPARE
11			I:00006	SPARE
12			I:00005	SPARE
13			I:00004	FLOOD SWITCH
14			I:00003	PANIC ALARM
15			I:00002	SPARE
16			I:00001	SPARE

ABC–1/2A DFU5 24P5

ABC–4A DFU6 24P6

ABC–4A DFU7 24P7

CR–1 116

CR–2 115

CR–BAT 113

ABC–1/4 FU114 114 — TANK VALVE POSITION SWITCH (VALVE CLOSED = SWITCH CLOSED)

ABC–1/4 FU112 112 — PUMP CONTROL VALVE POSITION SWITCH

HAND OFF AUTO

ABC–1/4 FU111 111 — WELL PUMP MS

110

ABC–1/4 FU109 109 — (E) INTRUSION (EXISTING)

108

SMOKE DETECTOR

107

106

ABC–1/4 FU104 105

DRY WELL FLOOD SWITCH (E) 104

ABC–1/4 FU103 103 — PANIC ALARM (E)

ABC–1/4 FU102 102

101

24P4 24C

NOTE: FIELD TERMINATIONS WILL BE ADDED ON AS–BUILT DRAWINGS.

EXISTING

Know what's below. Call 811 before you dig.

DATE	NO.	REVISION	BY
X/X/X	0	BID SET	

APPROVED BY:

Rob English, PE

DATE: 3/3/2026

Ben Mahony DESIGNED BY 2/26/2026 DATE

Ben Mahony DRAWN BY 2/26/2026 DATE

I-Wen Yang, PE REVIEWED BY 2/26/2026 DATE

CITY OF KIRKLAND WASHINGTON

CITY OF KIRKLAND
DEPARTMENT OF PUBLIC WORKS
123 FIFTH AVENUE KIRKLAND, WA 98033
(425) 587–3800 www.kirklandwa.gov

TELEMETRY PANEL - I/O MODEL 1 (OUTPUTS) - CONTROL WIRING DIAGRAM
SCADA REPLACEMENT
NORTH RESERVOIR EXISTING CONTROL PANEL (REFERENCE)

REFERENCE SHEET NO.
NR-E01

SHEET 11 of 366

PUMP CONTROL PANEL

E0400
E0401
E0402
E0403
E0404
E0405
E0406
E0407
E0408
E0409
E0410
E0411
E0412
E0413
E0414
E0415
E0416
E0417
E0418
E0419
E0420
E0421
E0422

NOTE: FIELD TERMINATIONS WILL BE ADDED ON AS-BUILT DRAWINGS.

TELEMETRY PANEL

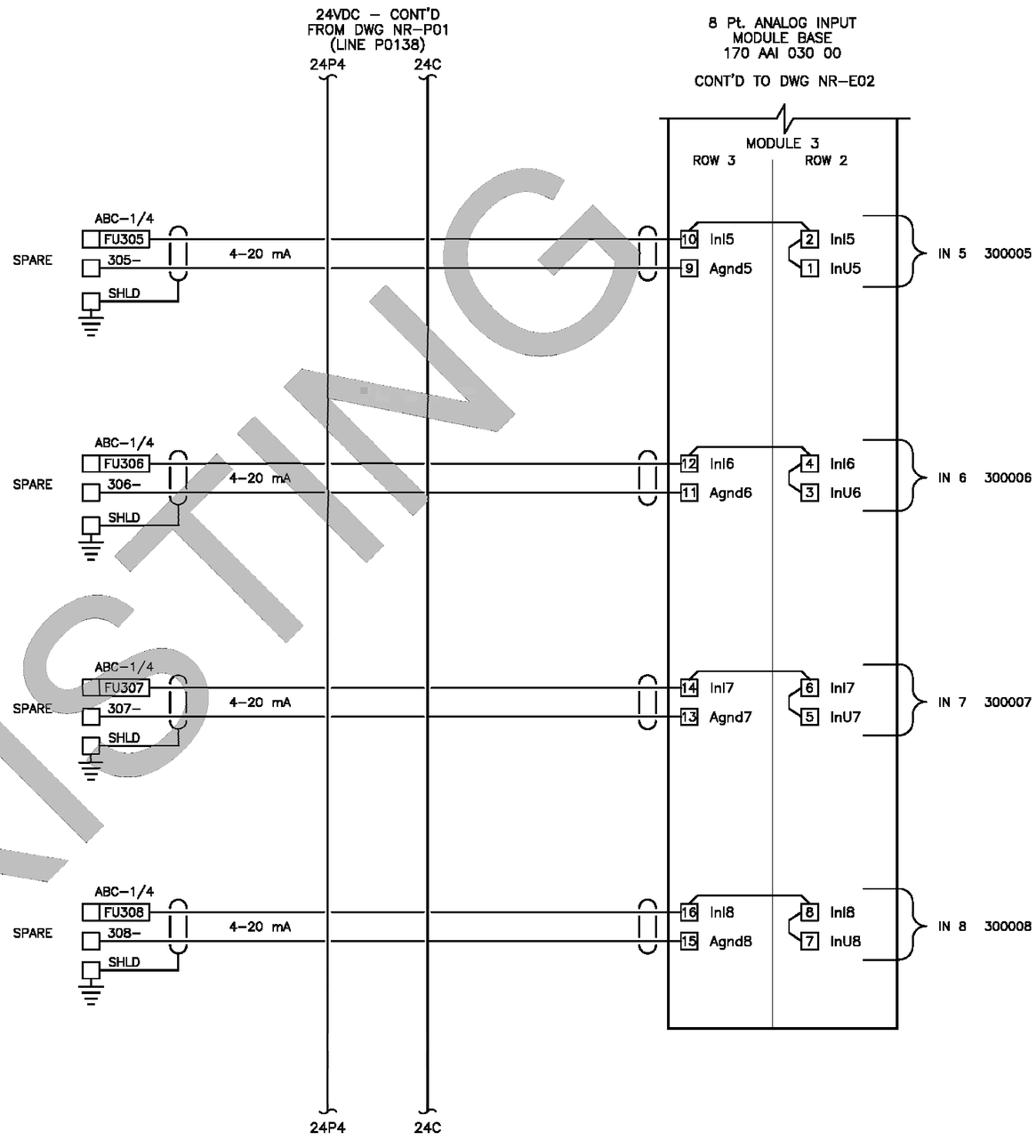

EXISTING

Know what's below. Call 811 before you dig.

DATE	NO.	REVISION	BY
X/X/X	0	BID SET	

APPROVED BY:

Rob English, PE

DATE: 3/3/2026

Ben Mahony DESIGNED BY 2/26/2026 DATE

Ben Mahony DRAWN BY 2/26/2026 DATE

I-Wen Yang, PE REVIEWED BY 2/26/2026 DATE

CITY OF KIRKLAND WASHINGTON

CITY OF KIRKLAND
DEPARTMENT OF PUBLIC WORKS
123 FIFTH AVENUE KIRKLAND, WA 98033
(425) 587-3800 www.kirklandwa.gov

TELEMETRY PANEL - I/O MODEL 2, ANALOG - CONTROL WIRING DIAGRAM
SCADA REPLACEMENT
NORTH RESERVOIR EXISTING CONTROL PANEL (REFERENCE)

REFERENCE SHEET NO.
NR-E02A

SHEET 12 of 366

PUMP CONTROL PANEL

TELEMETRY PANEL

E0400
E0401
E0402
E0403
E0404
E0405
E0406
E0407
E0408
E0409
E0410
E0411
E0412
E0413
E0414
E0415
E0416
E0417
E0418
E0419
E0420
E0421
E0422

545 ZONE
PRESSURE TRANSMITTER
(EXISTING)
(0–400 PSI)

545 ZONE
FLOW METER
(EXISTING)
(0–XX GPM)

NORTH RESERVOIR
LEVEL
(EXISTING)
(0–XX PSI)

24VDC – CONT'D
FROM DWG NR–P01
(LINE P0138)

24P4
24C

ABC–1/2A
DFU10
24P10

8 Pt. ANALOG INPUT
MODULE BASE
170 AAI 030 00

MODULE 3
ROW 3
ROW 2

18 L+
17 M–

ABC–1/4
FU301
301+
301–
24C
SHLD
4–20 mA

2 InI1
1 Agnd1
2 InI1
1 InU1
IN 1 300001

ABC–1/4
FU302
302+
302–
24C
SHLD
4–20 mA

4 InI2
3 Agnd2
4 InI2
3 InU2
IN 2 300002

ABC–1/4
FU303
303+
303–
24C
SHLD
4–20 mA

6 InI3
5 Agnd3
6 InI3
5 InU3
IN 3 545 ZONE FLOW METER

ABC–1/4
FU304
304+
304–
24C
SHLD
4–20 mA

8 InI4
7 Agnd4
8 InI4
7 InU4
IN 4 300004

CONT'D TO DWG NR–E02A

24P4
24C

NOTE: FIELD TERMINATIONS WILL BE ADDED
ON AS–BUILT DRAWINGS.

EXISTING

Know what's below. Call 811 before you dig.

DATE	NO.	REVISION	BY
X/X/X	0	BID SET	

APPROVED BY:

Rob English, PE

DATE: 3/3/2026

Ben Mahony — DESIGNED BY — 2/26/2026 DATE
Ben Mahony — DRAWN BY — 2/26/2026 DATE
I-Wen Yang, PE — REVIEWED BY — 2/26/2026 DATE

CITY OF KIRKLAND WASHINGTON

CITY OF KIRKLAND
DEPARTMENT OF PUBLIC WORKS
123 FIFTH AVENUE KIRKLAND, WA 98033
(425) 587–3800 www.kirklandwa.gov

TELEMETRY PANEL - I/O MODEL 2, ANALOG - CONTROL WIRING DIAGRAM

SCADA REPLACEMENT

NORTH RESERVOIR EXISTING CONTROL PANEL (REFERENCE)

REFERENCE SHEET NO.
NR-E02

SHEET 13 of 366

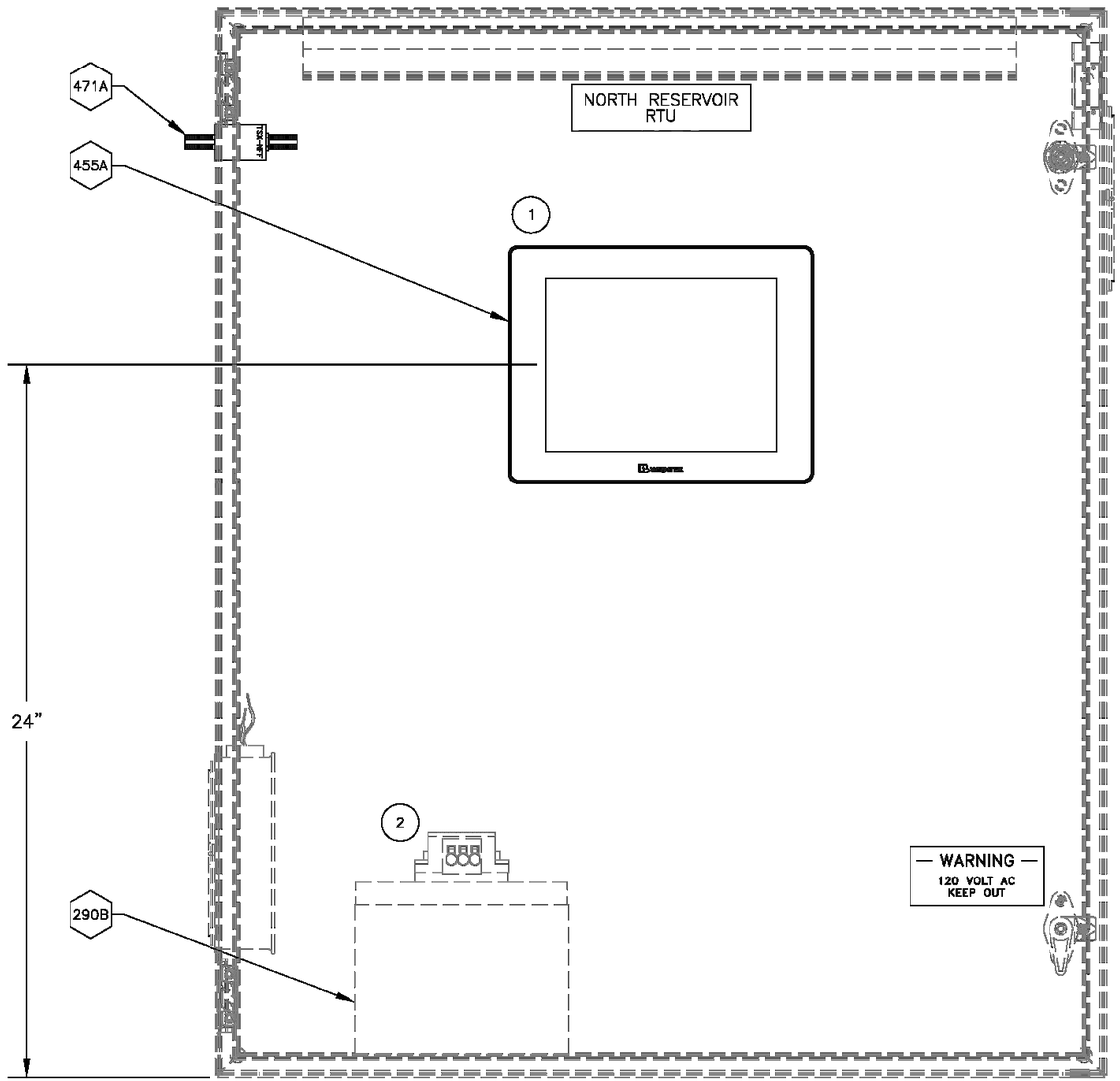

EXISTING ENCLOSURE

CONDUIT ENTRY
BOTTOM

NEMA RATING
12

MATERIAL
PAINTED CARBON STEEL

BUILD TYPE (FOR INTERNAL USE)
STANDARD

PANEL POWER SOURCE

PANEL xx CIRCUIT xx
120 VOLTS 1PH 60Hz

PANEL RATING

FULL LOAD AMPS 10A
SHORT CIRCUIT 10KAIC
LARGEST MOTOR FLA N/A

XXX BOM ITEM NUMBER

NOTES:
1. INSTALL NEW MAPLE SYSTEMS OIT
2. REMOVE EXISTING BATTERY AND REPLACE WITH NEW

811 Know what's below. Call 811 before you dig.

DATE	NO.	REVISION	BY
X/X/X	0	BID SET	

APPROVED BY:

Rob English, PE

DATE: 3/3/2026

Ben Mahony DESIGNED BY 2/26/2026 DATE
Ben Mahony DRAWN BY 2/26/2026 DATE
I-Wen Yang, PE REVIEWED BY 2/26/2026 DATE

CITY OF KIRKLAND WASHINGTON

CITY OF KIRKLAND
DEPARTMENT OF PUBLIC WORKS
123 FIFTH AVENUE KIRKLAND, WA 98033
(425) 587-3800 www.kirklandwa.gov

LAYOUT - PANEL - FRONT ELEVATION
SCADA REPLACEMENT
NORTH RESERVOIR CONTROL PANEL (NR)

REFERENCE SHEET NO.
NR-10.00

SHEET
14
of
366

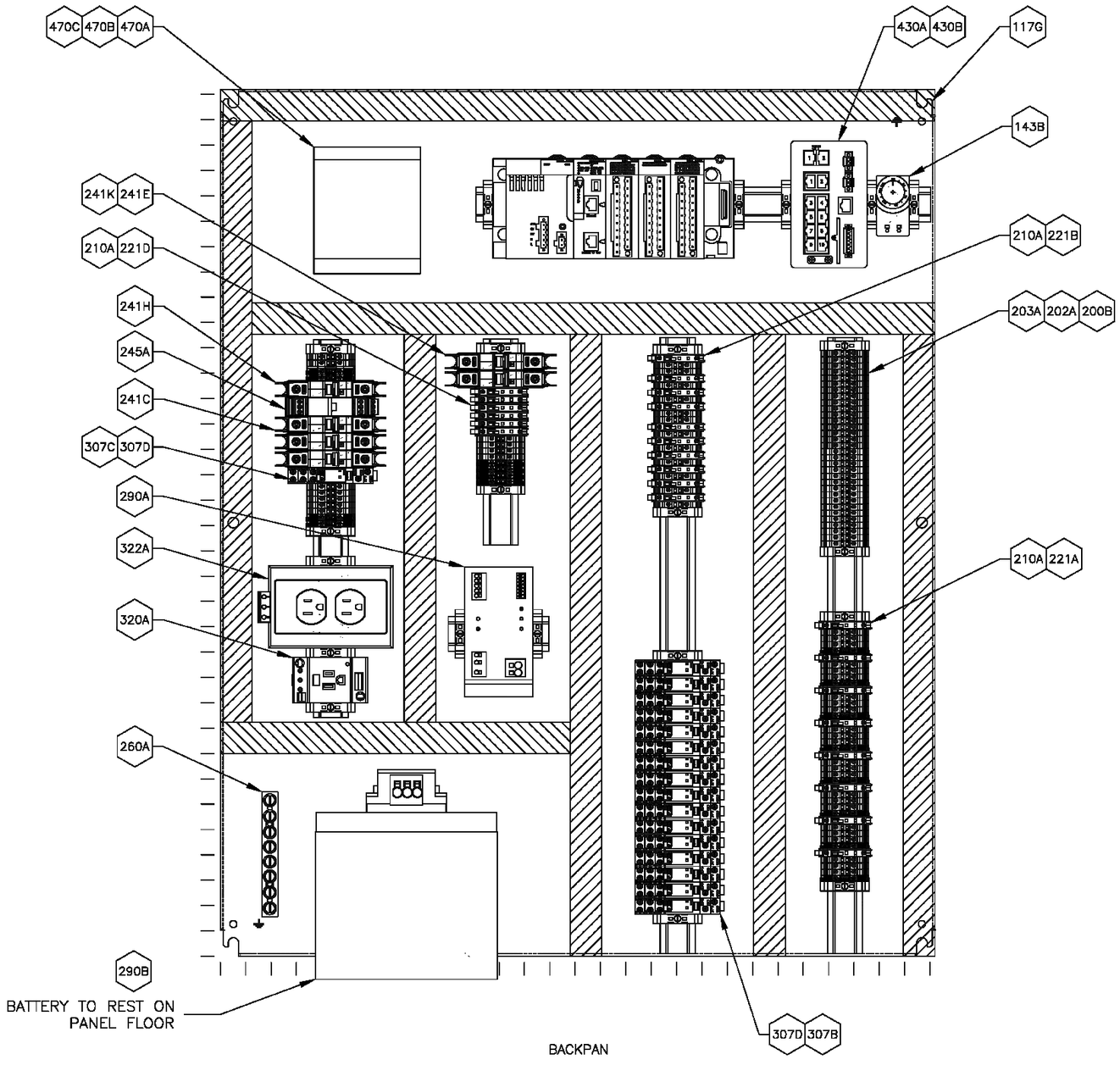

NOTES:
1. BACKPANEL ASSEMBLY TO BE INSTALLED IN EXISTING ENCLOSURE

XXX BOM ITEM NUMBER

Know what's below. Call 811 before you dig.

DATE	NO.	REVISION	BY
X/X/X	0	BID SET	

APPROVED BY:

Rob English, PE

DATE: 3/3/2026

Ben Mahony	DESIGNED BY	2/26/2026 DATE
Ben Mahony	DRAWN BY	2/26/2026 DATE
I-Wen Yang, PE	REVIEWED BY	2/26/2026 DATE

CITY OF KIRKLAND WASHINGTON

CITY OF KIRKLAND
DEPARTMENT OF PUBLIC WORKS
123 FIFTH AVENUE KIRKLAND, WA 98033
(425) 587-3800 www.kirklandwa.gov

LAYOUT - PANEL - BACKPAN ELEVATION

SCADA REPLACEMENT

NORTH RESERVOIR CONTROL PANEL (NR)

REFERENCE SHEET NO. NR-10.05

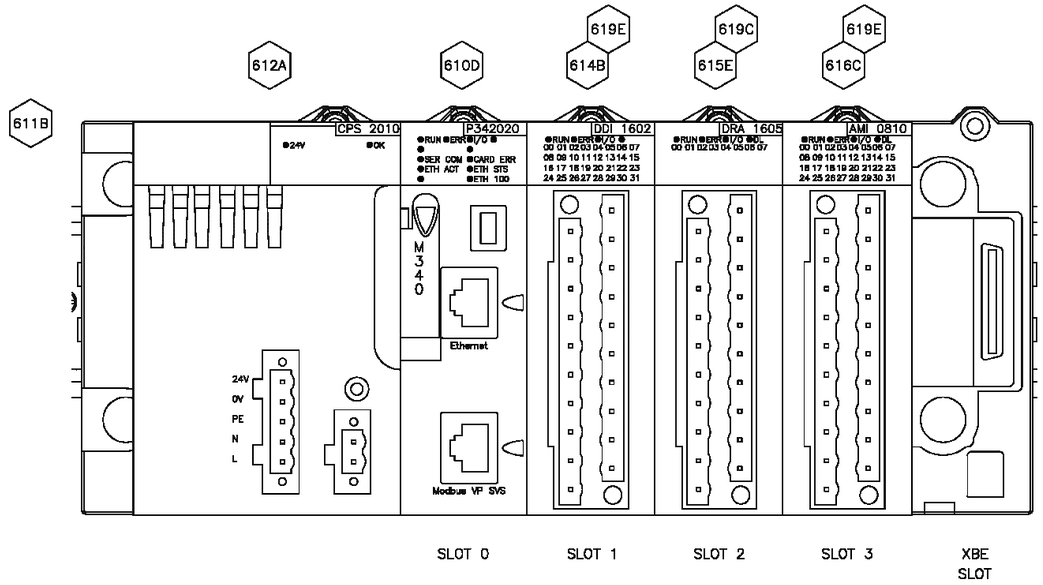

RACK 1

XXX BOM ITEM NUMBER

DATE	NO.	REVISION	BY
X/X/X	0	BID SET	

APPROVED BY:

Rob English, PE

DATE: 3/3/2026

Ben Mahony 2/26/2026
DESIGNED BY DATE

Ben Mahony 2/26/2026
DRAWN BY DATE

I-Wen Yang, PE 2/26/2026
REVIEWED BY DATE

CITY OF KIRKLAND

DEPARTMENT OF PUBLIC WORKS
123 FIFTH AVENUE KIRKLAND, WA 98033
(425) 587-3800 www.kirklandwa.gov

LAYOUT - PANEL - PLC RACK 1

SCADA REPLACEMENT

NORTH RESERVOIR CONTROL PANEL (NR)

REFERENCE SHEET NO. NR-10.07

SHEET 16 of 366

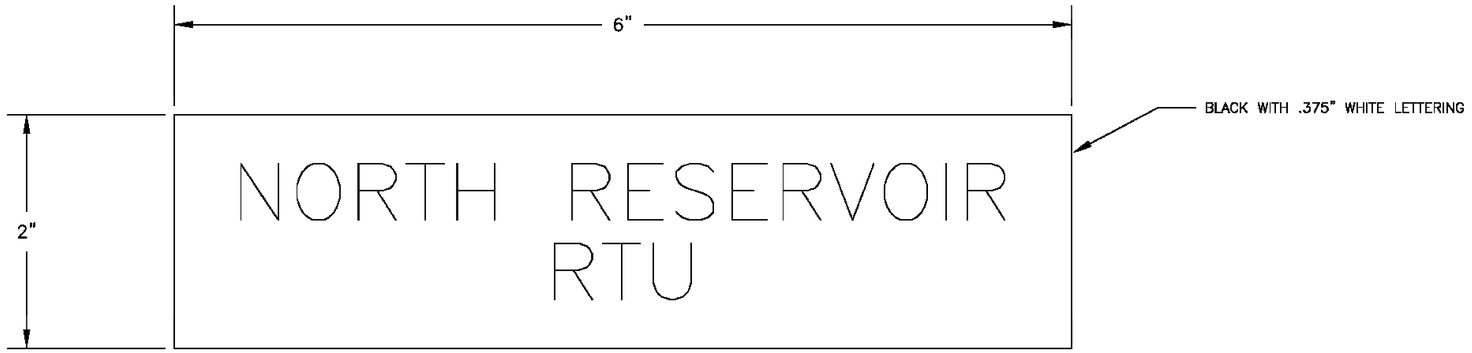

XXX BOM ITEM NUMBER

Know what's below. Call 811 before you dig.

DATE	NO.	REVISION	BY
X/X/X	0	BID SET	

APPROVED BY:

Rob English, PE

DATE: 3/3/2026

Ben Mahony	DESIGNED BY	2/26/2026 DATE
Ben Mahony	DRAWN BY	2/26/2026 DATE
I-Wen Yang, PE	REVIEWED BY	2/26/2026 DATE

CITY OF KIRKLAND

DEPARTMENT OF PUBLIC WORKS
123 FIFTH AVENUE KIRKLAND, WA 98033
(425) 587-3800 www.kirklandwa.gov

LAYOUT - PANEL - NAMEPLATE DETAILS

SCADA REPLACEMENT

NORTH RESERVOIR CONTROL PANEL (NR)

REFERENCE SHEET NO. NR-10.20

SHEET 17 of 366

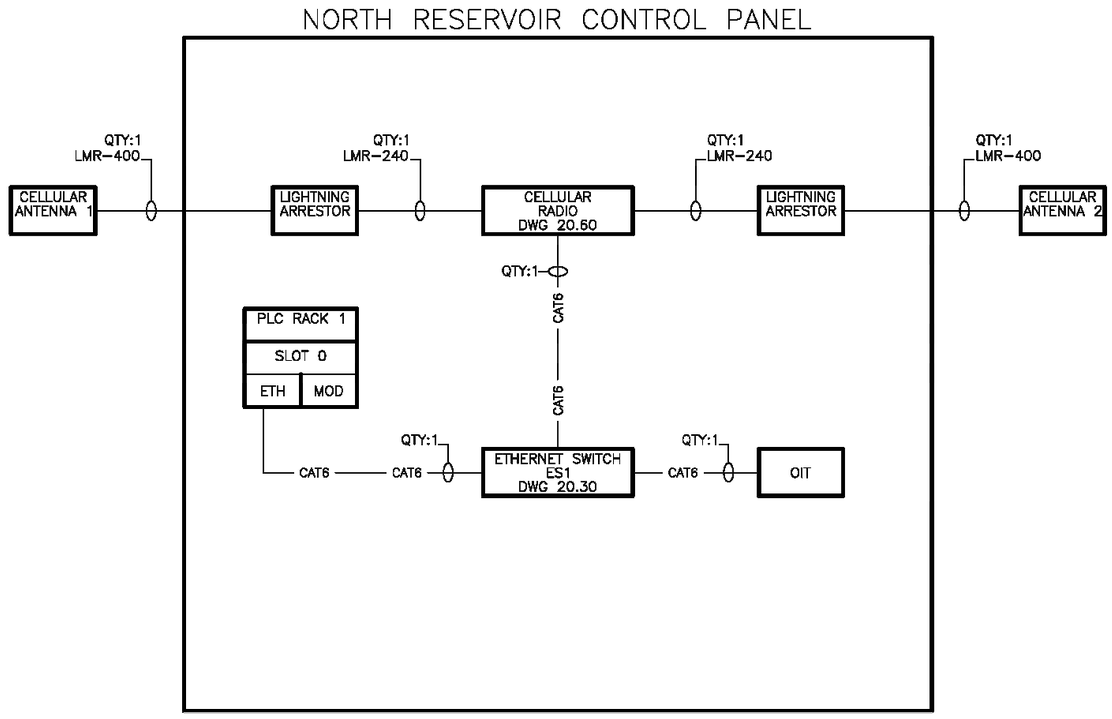

Know what's below. Call 811 before you dig.

DATE	NO.	REVISION	BY
X/X/X	0	BID SET	

APPROVED BY:

Rob English, PE

DATE: 3/3/2026

Ben Mahony — DESIGNED BY — 2/26/2026 DATE

Ben Mahony — DRAWN BY — 2/26/2026 DATE

I-Wen Yang, PE — REVIEWED BY — 2/26/2026 DATE

CITY OF KIRKLAND WASHINGTON

CITY OF KIRKLAND
DEPARTMENT OF PUBLIC WORKS
123 FIFTH AVENUE KIRKLAND, WA 98033
(425) 587-3800 www.kirklandwa.gov

NETWORK OVERVIEW DIAGRAM

SCADA REPLACEMENT

NORTH RESERVOIR CONTROL PANEL (NR)

REFERENCE SHEET NO.
NR-20.00

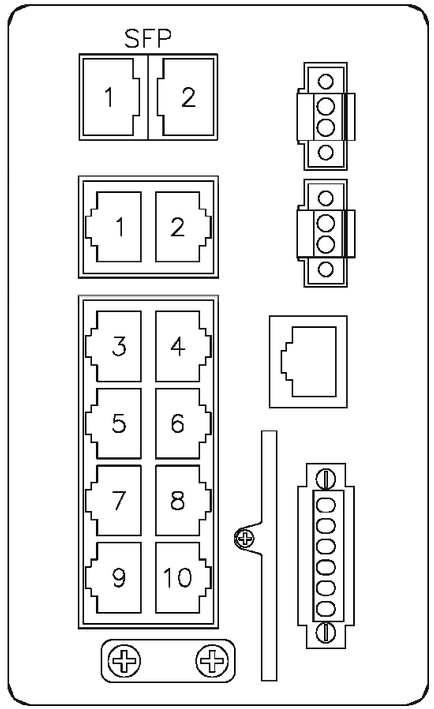

NETWORK SWITCH NS-1					
				DESTINATION DEVICE	
PORT#	CABLE TYPE	NETWORK DESCRIPTION	CABLE LABEL	DESCRIPTION	PORT #
1	CAT6	PROGRAMMABLE LOGIC CONTROLLER	PLC	PROGRAMMABLE LOGIC CONTROLLER	1
2	CAT6	OPERATIONAL INTERFACE TERMINAL	OIT	OPERATIONAL INTERFACE TERMINAL	1
3	CAT6	CELLULAR RADIO	RADIO	CELLULAR RADIO	ETHERNET
4					
5					
6					
7					
8					
COMBO 1					
COMBO 2					

Know what's below. Call 811 before you dig.

DATE	NO.	REVISION	BY
X/X/X	0	BID SET	

APPROVED BY:

Rob English, PE

DATE: 3/3/2026

Ben Mahony DESIGNED BY 2/26/2026 DATE

Ben Mahony DRAWN BY 2/26/2026 DATE

I-Wen Yang, PE REVIEWED BY 2/26/2026 DATE

CITY OF KIRKLAND WASHINGTON

CITY OF KIRKLAND
DEPARTMENT OF PUBLIC WORKS
123 FIFTH AVENUE KIRKLAND, WA 98033
(425) 587-3800 www.kirklandwa.gov

NETWORK SWITCH (NS-1), PORT SCHEDULE

SCADA REPLACEMENT

NORTH RESERVOIR CONTROL PANEL (NR)

REFERENCE SHEET NO. NR-23.00

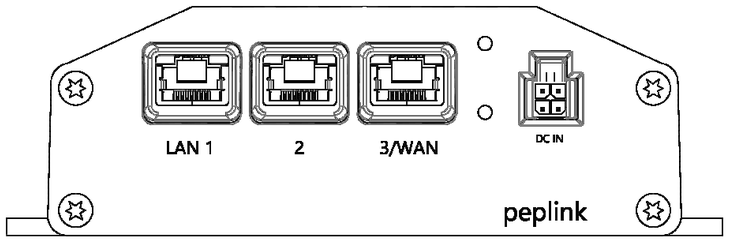

CELLULAR MODEM CM1				DESTINATION DEVICE	
PORT#	CABLE TYPE	NETWORK DESCRIPTION	CABLE LABEL	DESCRIPTION	PORT #
LAN 1	CAT6	CELLULAR RADIO	RADIO	ETHERNET SWITCH	3
LAN 2					
LAN 3/ WAN					
MAIN	LMR-240	CELLULAR ANTENNA 1	CELL-1	LIGHTNING ARRESTOR 1	N/A
AUX	LMR-240	CELLULAR ANTENNA 1	CELL-2	LIGHTNING ARRESTOR 2	N/A

Know what's below. Call 811 before you dig.

DATE	NO.	REVISION	BY
X/X/X	0	BID SET	

APPROVED BY:

Rob English, PE

DATE: 3/3/2026

Ben Mahony 2/26/2026
DESIGNED BY DATE

Ben Mahony 2/26/2026
DRAWN BY DATE

I-Wen Yang, PE 2/26/2026
REVIEWED BY DATE

CITY OF KIRKLAND WASHINGTON

CITY OF KIRKLAND
DEPARTMENT OF PUBLIC WORKS
123 FIFTH AVENUE KIRKLAND, WA 98033
(425) 587-3800 www.kirklandwa.gov

COMM - CELLULAR MODEM (CM1), PORT SCHEDULE

SCADA REPLACEMENT

NORTH RESERVOIR CONTROL PANEL (NR)

REFERENCE SHEET NO.
NR-26.00

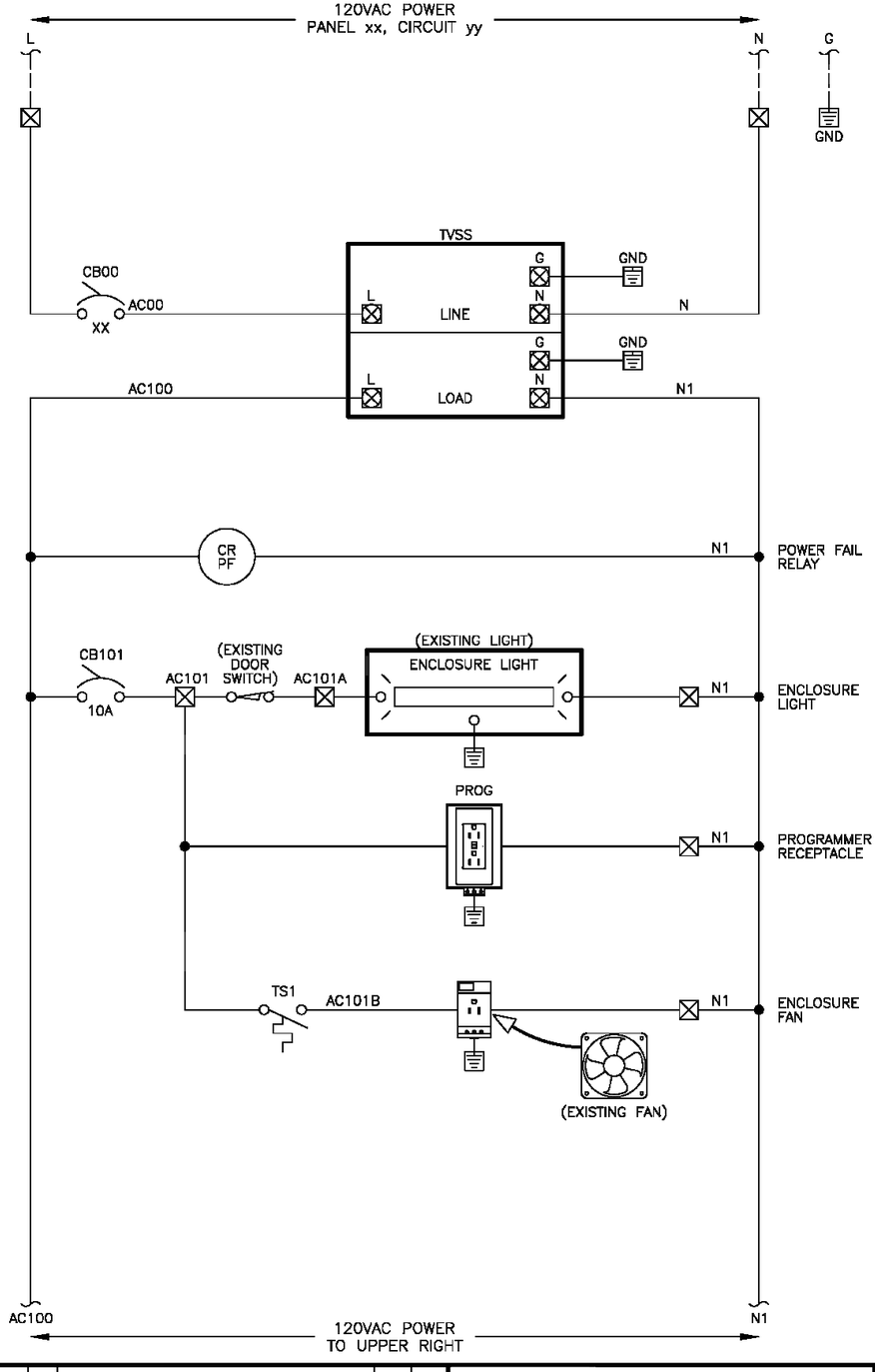

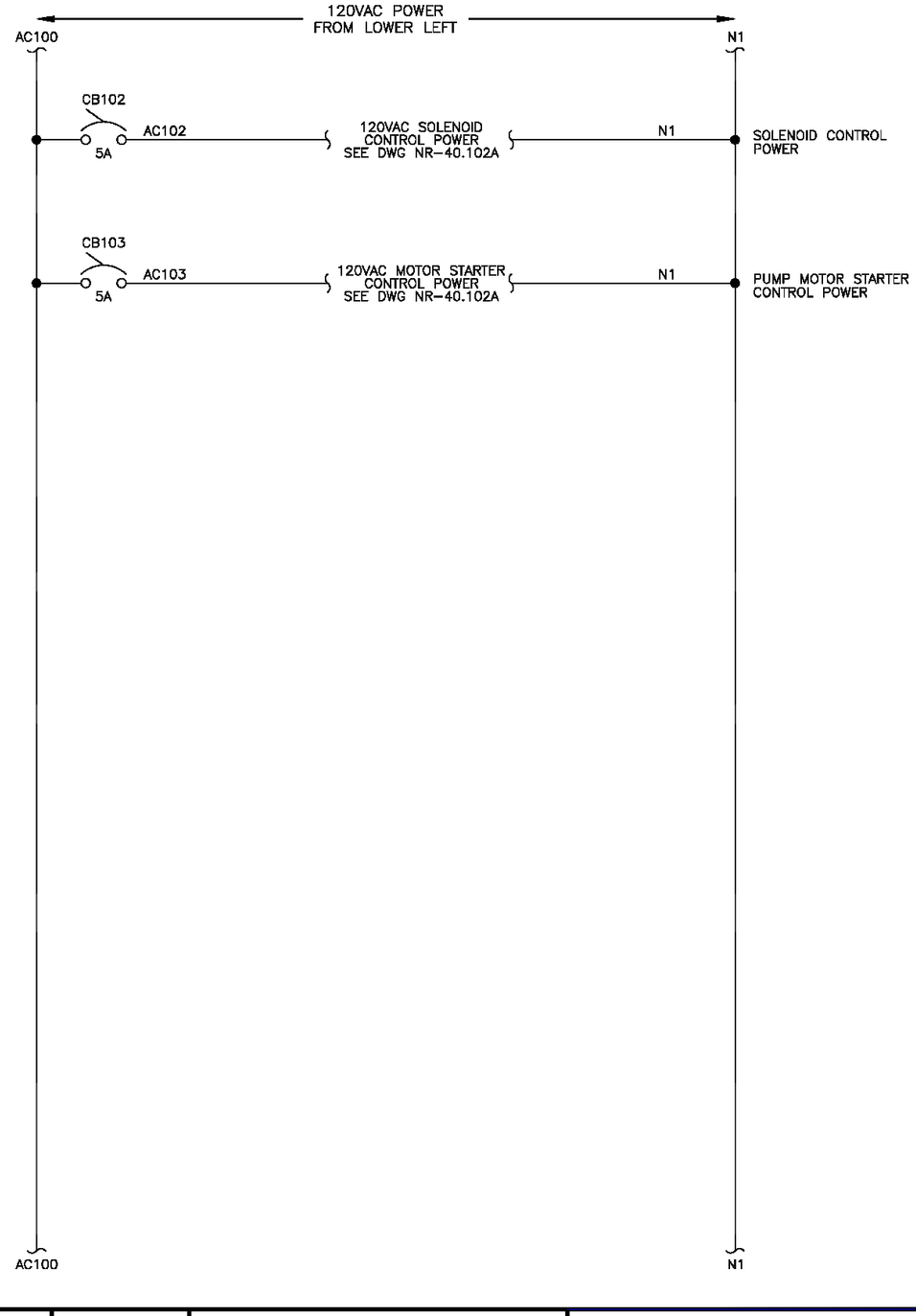

Know what's below. Call 811 before you dig.

DATE	NO.	REVISION	BY
X/X/X	0	BID SET	

APPROVED BY:

Rob English, PE

DATE: 3/3/2026

Ben Mahony — DESIGNED BY — 2/26/2026 DATE

Ben Mahony — DRAWN BY — 2/26/2026 DATE

I-Wen Yang, PE — REVIEWED BY — 2/26/2026 DATE

CITY OF KIRKLAND

DEPARTMENT OF PUBLIC WORKS
123 FIFTH AVENUE KIRKLAND, WA 98033
(425) 587-3800 www.kirklandwa.gov

120VAC POWER DISTRIBUTION DIAGRAM
SCADA REPLACEMENT

NORTH RESERVOIR CONTROL PANEL (NR)

REFERENCE SHEET NO.
NR-31.00

SHEET 21 of 366

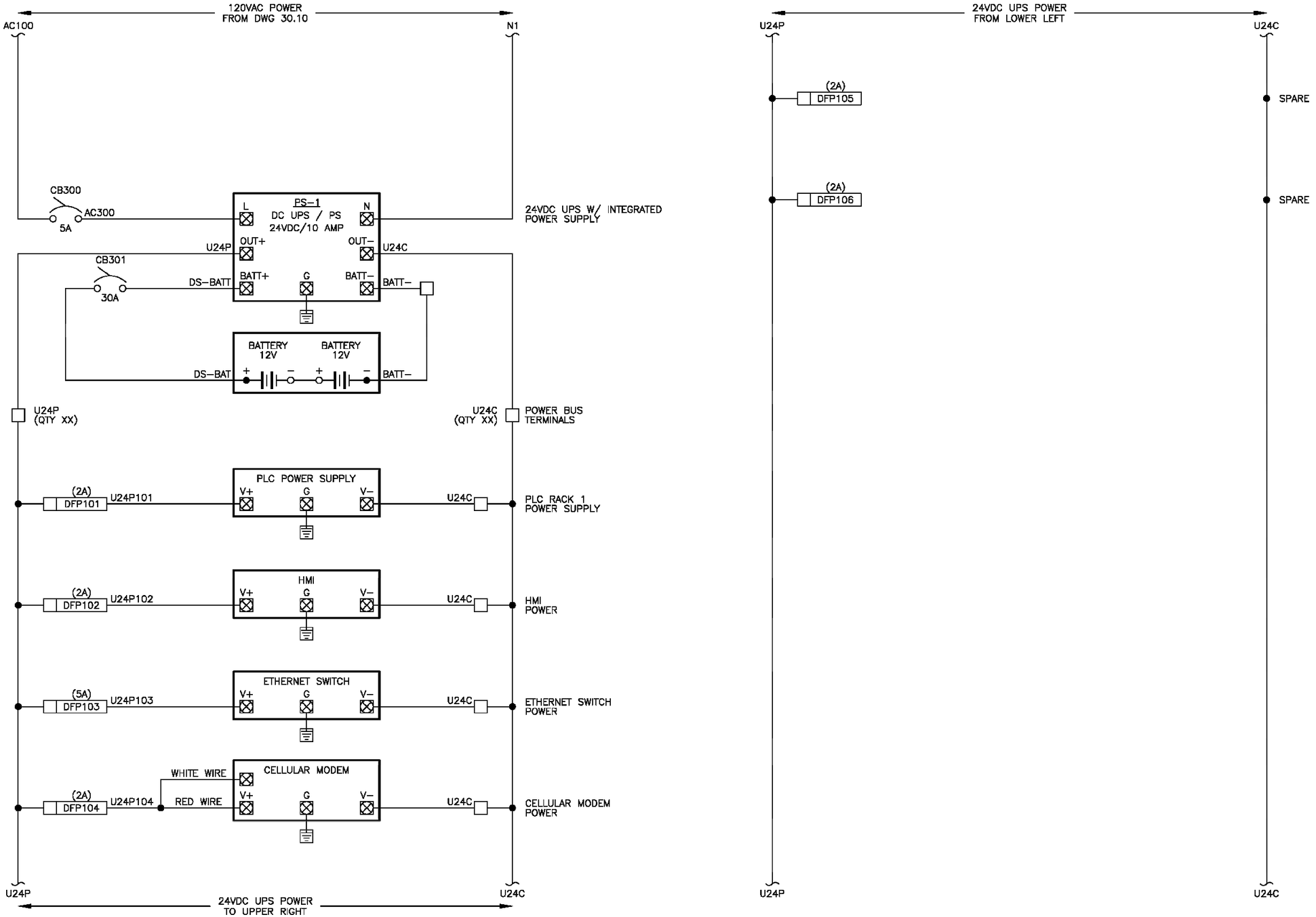

Know what's below. Call 811 before you dig.

DATE	NO.	REVISION	BY
X/X/X	0	BID SET	

APPROVED BY:

Rob English, PE

DATE: 3/3/2026

Ben Mahony	DESIGNED BY	2/26/2026 DATE
Ben Mahony	DRAWN BY	2/26/2026 DATE
I-Wen Yang, PE	REVIEWED BY	2/26/2026 DATE

CITY OF KIRKLAND

DEPARTMENT OF PUBLIC WORKS
123 FIFTH AVENUE KIRKLAND, WA 98033
(425) 587-3800 www.kirklandwa.gov

24VDC POWER DISTRIBUTION DIAGRAM

SCADA REPLACEMENT

NORTH RESERVOIR CONTROL PANEL (NR)

REFERENCE SHEET NO.
NR-32.00

SHEET
22
of
366

FIELD | NR

24VDC POWER FROM DWG 32.00

U24P | U24C

16 PT. 24VDC DISCRETE INPUT MODULE RACK 1, SLOT 01

BMXDDI1602

	(0.5A) DF.101.00 U24P	DI.101.00	DI.101.00	1 I0	SPARE
		DI.101.01	DI.101.01	2 I1	SPARE
TANK VALVE POSITION SWITCH (VALVE CLOSED = SWITCH CLOSED)	(0.5A) DF.101.02 24P	DI.101.02	DI.101.02	3 I2	TANK VALVE CLOSED
PUMP CONTROL VALVE POSITION SWITCH	(0.5A) DF.101.03 U24P	DI.101.03	DI.101.03	4 I3	PUMP CONTROL VALVE CLOSED
CR-MS	(0.5A) DF.101.04 U24P	DI.101.04	DI.101.04	5 I4	WELL PUMP RUNNING
OFF / HAND / AUTO		DI.101.05	DI.101.05	6 I5	REMOTE HOA IN AUTO
SMOKE DETECTOR	(0.5A) DF.101.06 U24P	DI.101.06	DI.101.06	7 I6	SMOKE DETECTION
INTRUSION (EXISTING)	(0.5A) DF.101.07 U24P	DI.101.07	DI.101.07	8 I7	INTRUSION ALARM

U24P | U24C

(CONTINUED TO DWG 40.101B)

811 Know what's below. Call 811 before you dig.

DATE	NO.	REVISION	BY
X/X/X	0	BID SET	

APPROVED BY:

Rob English, PE

DATE: 3/3/2026

Ben Mahony — DESIGNED BY — 2/26/2026 DATE

Ben Mahony — DRAWN BY — 2/26/2026 DATE

I-Wen Yang, PE — REVIEWED BY — 2/26/2026 DATE

CITY OF KIRKLAND WASHINGTON

CITY OF KIRKLAND
DEPARTMENT OF PUBLIC WORKS
123 FIFTH AVENUE KIRKLAND, WA 98033
(425) 587-3800 www.kirklandwa.gov

DISCRETE INPUT MODULE RACK 1, SLOT 01 - WIRING DIAGRAM (1)

SCADA REPLACEMENT

NORTH RESERVOIR CONTROL PANEL (NR)

FIELD | NR

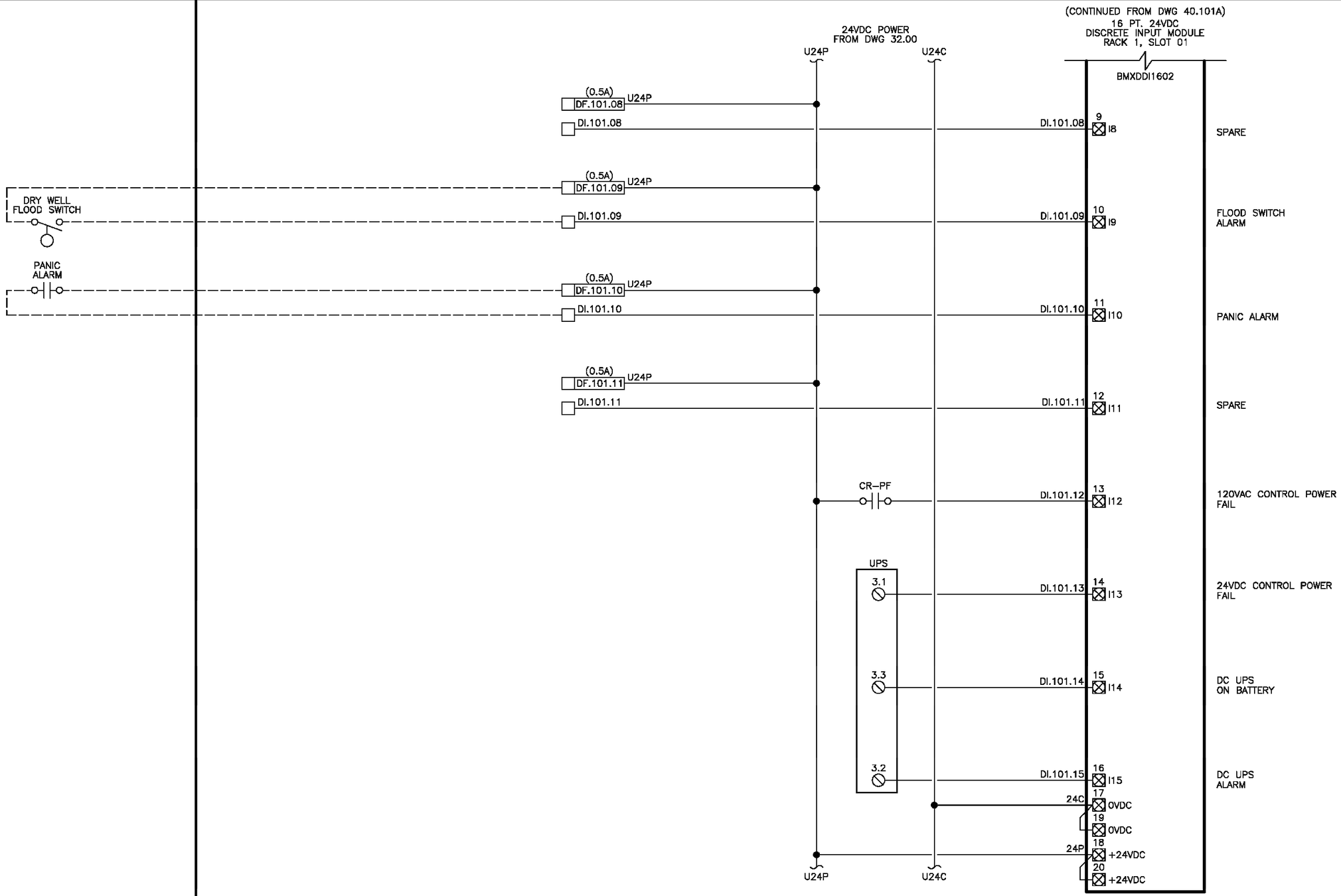

Know what's below. Call 811 before you dig.

DATE	NO.	REVISION	BY
X/X/X	0	BID SET	

APPROVED BY:

Rob English, PE

DATE: 3/3/2026

Ben Mahony (DESIGNED BY)	2/26/2026 (DATE)	
Ben Mahony (DRAWN BY)	2/26/2026 (DATE)	
I-Wen Yang, PE (REVIEWED BY)	2/26/2026 (DATE)	

CITY OF KIRKLAND

DEPARTMENT OF PUBLIC WORKS
123 FIFTH AVENUE KIRKLAND, WA 98033
(425) 587-3800 www.kirklandwa.gov

DISCRETE INPUT MODULE RACK 1, SLOT 01 - WIRING DIAGRAM (2)

SCADA REPLACEMENT

NORTH RESERVOIR CONTROL PANEL (NR)

REFERENCE SHEET NO. NR-40.101B

SHEET 24 of 366

FIELD

NR

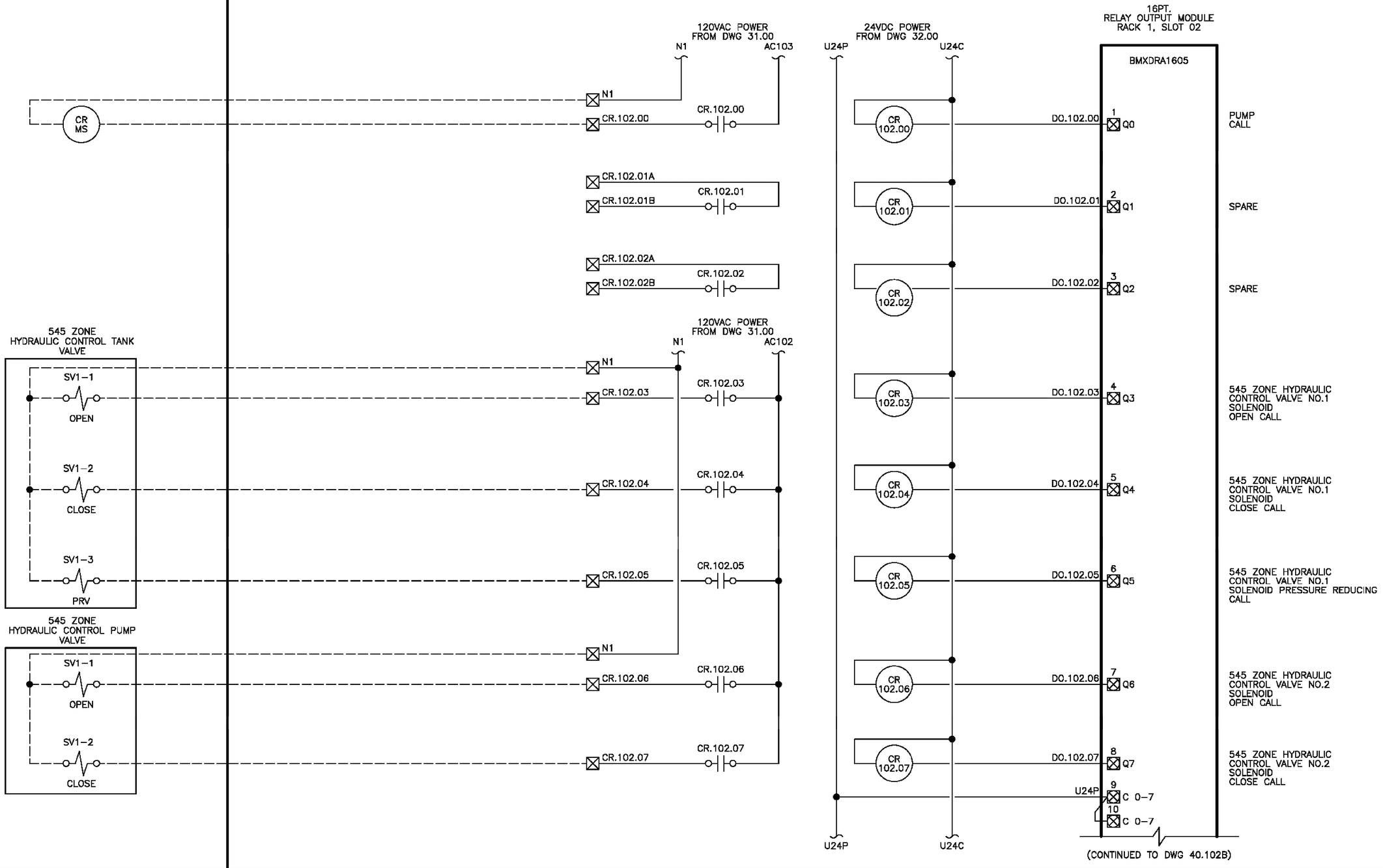

Know what's below. Call 811 before you dig.

DATE	NO.	REVISION	BY
X/X/X	0	BID SET	

APPROVED BY:

Rob English, PE

DATE: 3/3/2026

Ben Mahony	DESIGNED BY	2/26/2026 DATE
Ben Mahony	DRAWN BY	2/26/2026 DATE
I-Wen Yang, PE	REVIEWED BY	2/26/2026 DATE

CITY OF KIRKLAND

DEPARTMENT OF PUBLIC WORKS
123 FIFTH AVENUE KIRKLAND, WA 98033
(425) 587-3800 www.kirklandwa.gov

RELAY OUTPUT MODULE RACK 1, SLOT 02 - WIRING DIAGRAM (1)

SCADA REPLACEMENT

NORTH RESERVOIR CONTROL PANEL (NR)

REFERENCE SHEET NO. NR-40.102A

SHEET 25 of 366

FIELD	NR

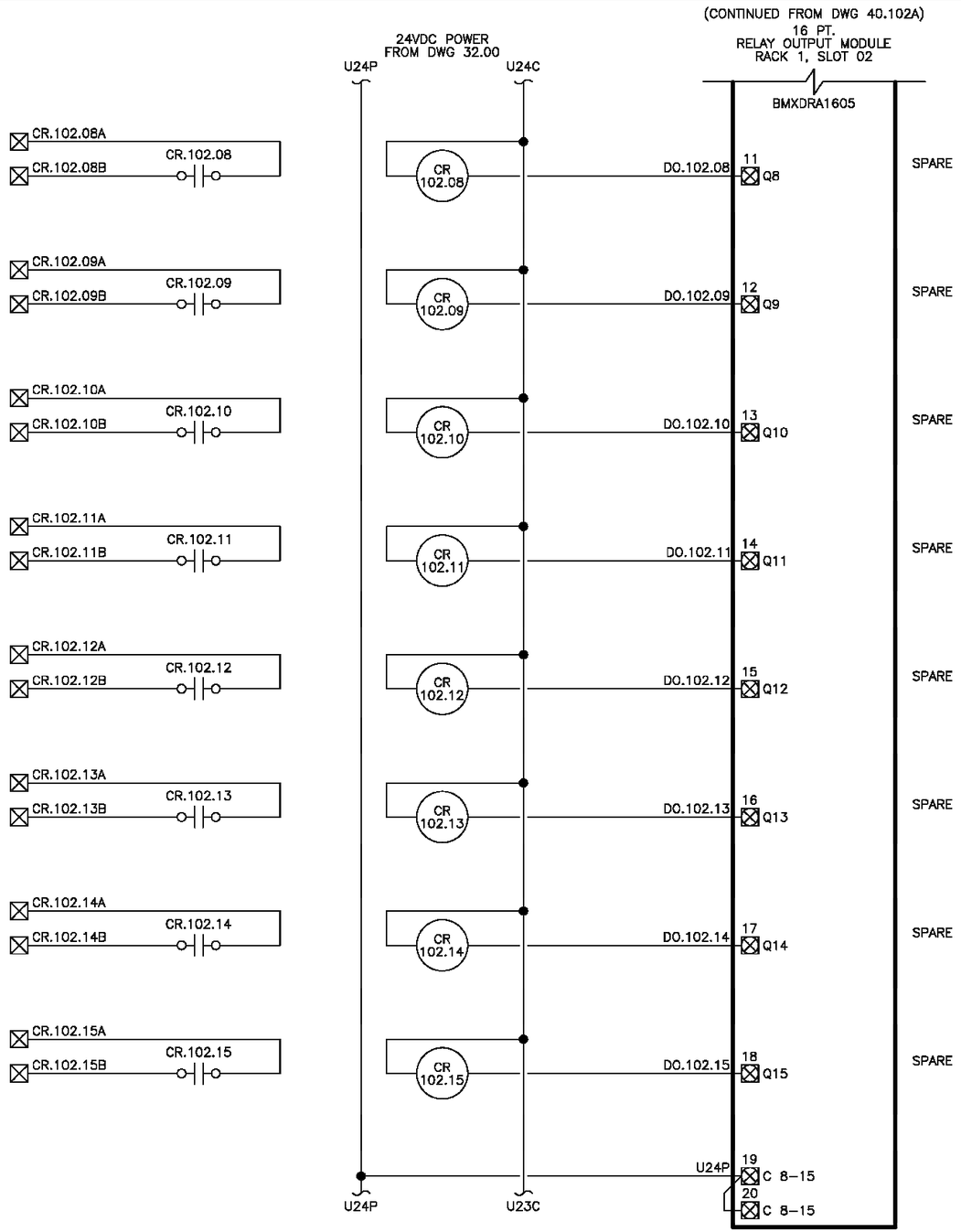

NO.	DATE	REVISION	BY
0	X/X/X	BID SET	

Know what's below. Call 811 before you dig.

APPROVED BY:

Rob English, PE

DATE: 3/3/2026

Ben Mahony	DESIGNED BY	2/26/2026 DATE
Ben Mahony	DRAWN BY	2/26/2026 DATE
I-Wen Yang, PE	REVIEWED BY	2/26/2026 DATE

CITY OF KIRKLAND

DEPARTMENT OF PUBLIC WORKS
123 FIFTH AVENUE KIRKLAND, WA 98033
(425) 587–3800 www.kirklandwa.gov

RELAY OUTPUT MODULE RACK 1, SLOT 02 - WIRING DIAGRAM (2)

SCADA REPLACEMENT

NORTH RESERVOIR CONTROL PANEL (NR)

REFERENCE SHEET NO.
NR-40.102B

SHEET
26
of
366

FIELD | NR

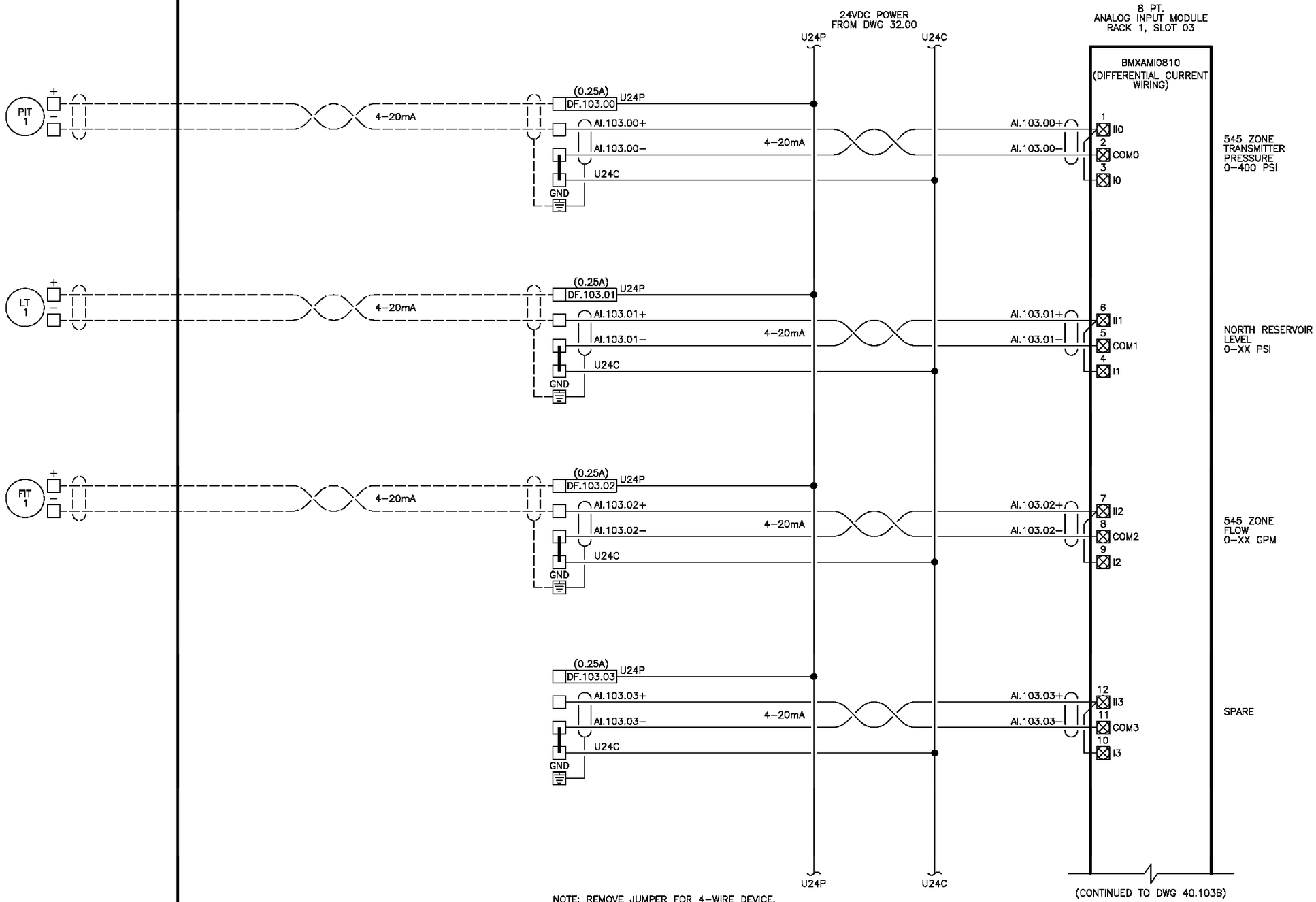

NOTE: REMOVE JUMPER FOR 4–WIRE DEVICE.

Know what's below. Call 811 before you dig.

DATE	NO.	REVISION	BY
X/X/X	0	BID SET	

APPROVED BY:

Rob English, PE

DATE: 3/3/2026

Ben Mahony — DESIGNED BY — 2/26/2026 DATE

Ben Mahony — DRAWN BY — 2/26/2026 DATE

I-Wen Yang, PE — REVIEWED BY — 2/26/2026 DATE

CITY OF KIRKLAND

DEPARTMENT OF PUBLIC WORKS
123 FIFTH AVENUE KIRKLAND, WA 98033
(425) 587–3800 www.kirklandwa.gov

ANALOG INPUT MODULE RACK 1, SLOT 03 - WIRING DIAGRAM (1)

SCADA REPLACEMENT

NORTH RESERVOIR CONTROL PANEL (NR)

REFERENCE SHEET NO. NR-40.103A

SHEET 27 of 366

FIELD	NR

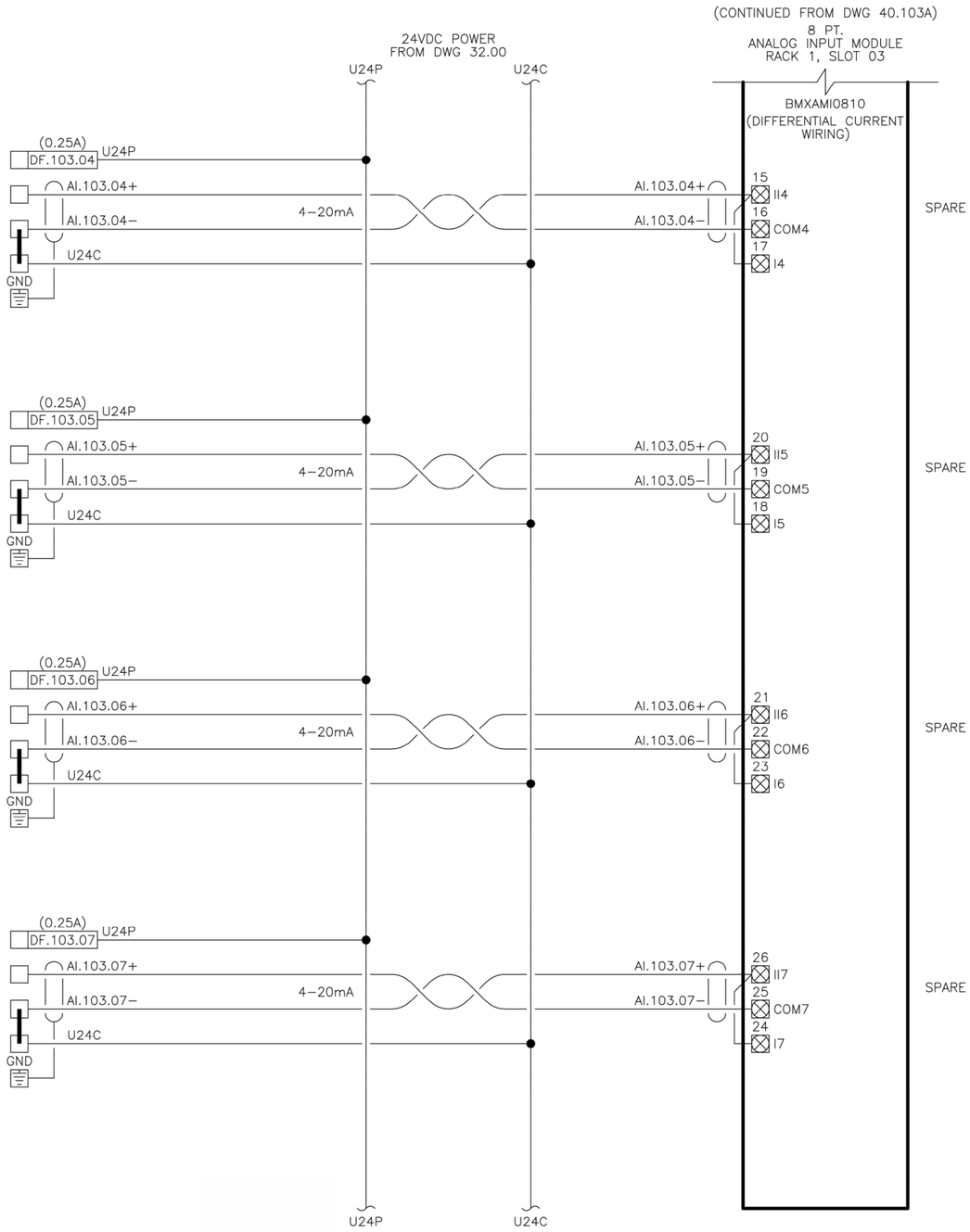

NOTE: REMOVE JUMPER FOR 4–WIRE DEVICE.

DATE	NO.	REVISION	BY
X/X/X	0	BID SET	

APPROVED BY:

Rob English, PE

DATE: 3/3/2026

Ben Mahony — DESIGNED BY — 2/26/2026 DATE

Ben Mahony — DRAWN BY — 2/26/2026 DATE

I-Wen Yang, PE — REVIEWED BY — 2/26/2026 DATE

CITY OF KIRKLAND

DEPARTMENT OF PUBLIC WORKS
123 FIFTH AVENUE KIRKLAND, WA 98033
(425) 587–3800 www.kirklandwa.gov

ANALOG INPUT MODULE RACK 1, SLOT 03 - WIRING DIAGRAM (2)

SCADA REPLACEMENT

NORTH RESERVOIR CONTROL PANEL (NR)

REFERENCE SHEET NO. NR-40.103B

SHEET 28 of 366

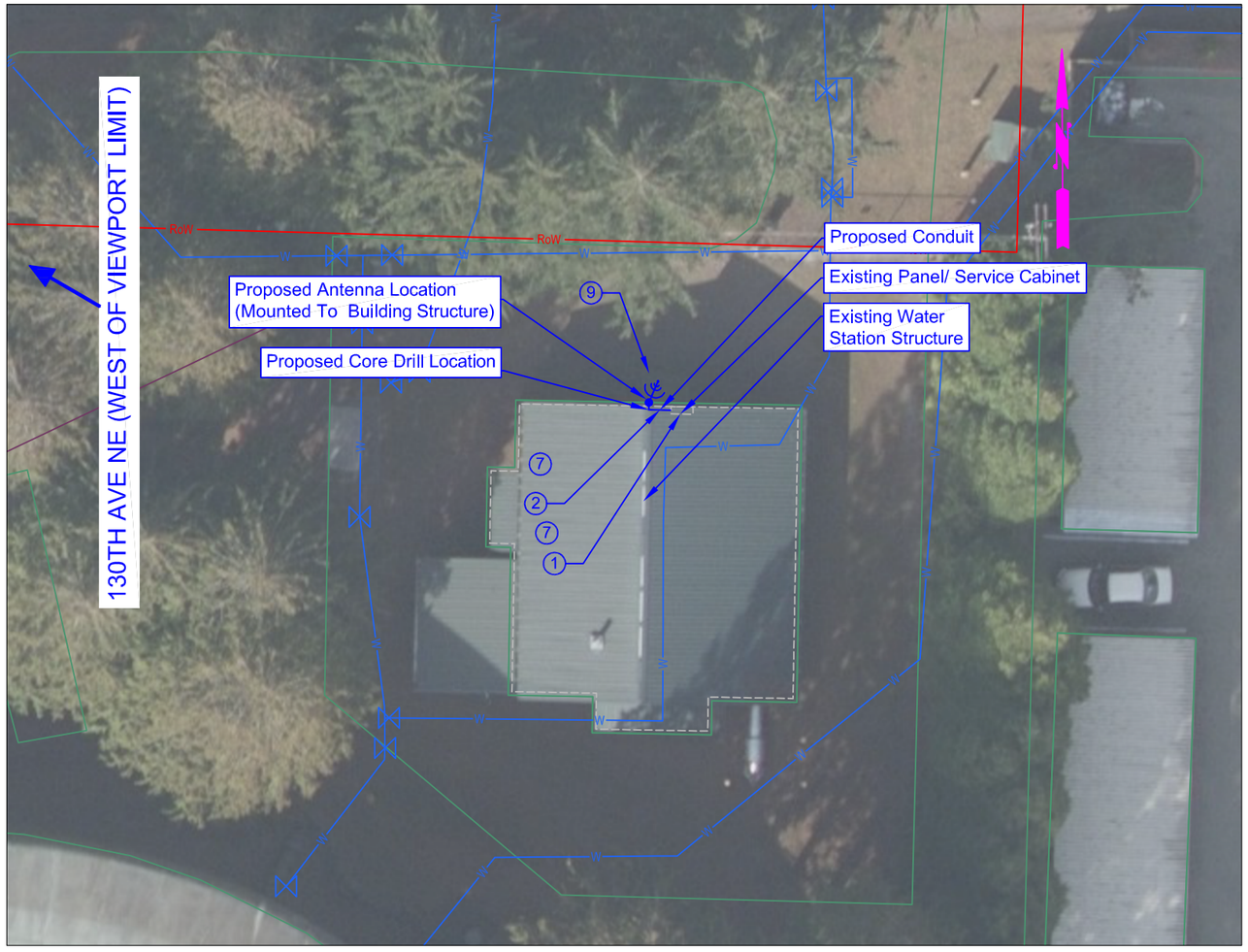

SITE: South Reservoir
UTILITY: Water
PROJECT ADDRESS: 13013 NE 65th St, Kirkland, WA 98033

GIS DISCLAIMER:
The as-built and utility information shown in the project plans are based on the City of Kirkland's available GIS information. Thus, the contractor shall field verify all of the proposed conditions and limits. Additionally, the contractor shall call for utility locates at least 48 hours prior to any trenching or excavation work to field verify that no utility conflicts exist with the proposed excavation limits.

20 10 0 20 40

A SOUTH-EAST VIEW
NOT TO SCALE

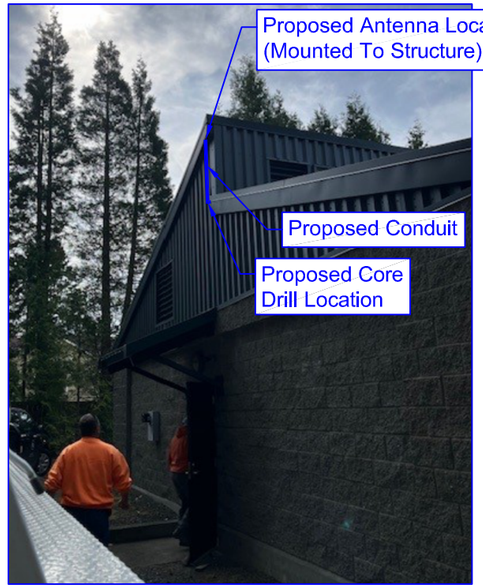

B NORTH-WEST VIEW
NOT TO SCALE

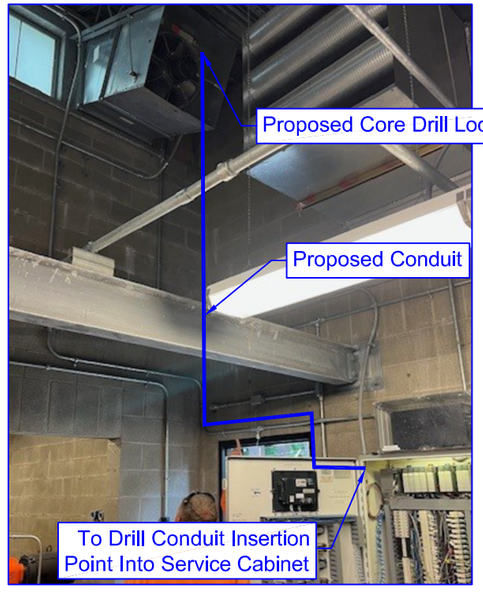

CONSTRUCTION NOTES:

1. TO REPLACE PANEL AND UPDATE THE SOFTWARE IN THE SERVICE CABINET PER THE SITE-SPECIFIC BILL OF MATERIALS (BOM'S).
2. TO INSTALL 4-INCH SCH. 40 CONDUIT PIPING AND REPLACE BACKFILL WITH NATIVE SOILS, IN KIND.
3. TO PROTECT EXISTING BURIED UTILITY, SEE GENERAL NOTE 1.
4. TO PROTECT EXISTING BURIED POWER AND/ OR FRANCHISE UTILITY, SEE GENERAL NOTE 1.
5. TO INSTALL FIBER CABLE THROUGH EXISTING FIBER CONDUIT.
6. TO REMOVE AND REPLACE CONCRETE SIDEWALK.
7. TO CORE-DRILL HOLE(S) INTO EXISTING STRUCTURE AND/ OR EXISTING SERVICE CABINET.
8. TO INSTALL EXTERNAL MOUNTED LOW-PROFILE (4 FT HIGH POLE HEIGHT) ANTENNA PER ANTENNA STANDARD DETAIL.
9. TO INSTALL EXTERNAL MOUNTED HIGH-PROFILE (20 FT HIGH POLE HEIGHT) ANTENNA PER ANTENNA STANDARD DETAIL.
10. TO INSTALL INTERNAL PANEL-MOUNTED LOW-PROFILE (2 FT HIGH POLE HEIGHT) ANTENNA PER ANTENNA STANDARD DETAIL.
11. TO INSTALL FULL-PROFILE (20 FT HIGH POLE HEIGHT) ANTENNA WITH A CONCRETE ANCHOR PER ANTENNA AND ANTENNA BASE STANDARD DETAIL.
12. TO SALVAGE AND REUSE EXISTING ANTENNA STRUCTURE AND INSTALL PROPOSED ANTENNA EQUIPMENT.
13. TO REMOVE EXISTING YAGI ANTENNA ON THE EXISTING ANTENNA POLE STRUCTURE.
14. TO INSTALL NEMA 4X ENCLOSURE ON PROPOSED OR EXISTING ANTENNA POLE STRUCTURE WITH THE NEW MODEM INSIDE THE ENCLOSURE.
15. TO INSTALL FIBER CONNECTION IN EXISTING FIBER CONDUIT.
16. TO INSTALL FIBER CONNECTION IN EXISTING SIGNAL CABINET/ JUNCTION BOX.

GENERAL NOTES:

1. UTILITY LOCATIONS SHOWN ARE APPROXIMATE AND BASED ON AVAILABLE GIS, FIELD OBSERVATIONS, AND UTILITY LOCATES. CONTRACTOR SHALL VERIFY PRIOR TO CONSTRUCTION.
2. SEWER STRUCTURE DATA AND LOCATIONS SHOWN ARE APPROXIMATE BASED ON AVAILABLE CITY GIS AND AS-BUILT RECORDS. THE CONTRACTOR SHALL CONDUCT PIPE AND SITE VERIFICATION PRIOR TO PROCEEDING WITH CONSTRUCTION.
3. CITY SHALL COORDINATE AND SECURE ANY NECESSARY AGREEMENTS AND/ OR EASEMENT WITH PROPERTY PRIOR TO ANY WORK ON PRIVATE PROPERTY. NO WORK SHALL BE PERFORMED OUTSIDE OF THE RIGHT-OF-WAY WITHOUT PRIOR AUTHORIZATION BY THE ENGINEER.
4. IF DISTURBED, HMA PAVEMENT SECTION SHALL BE REPLACED PER PRE-APPROVED PLAN NO. CK-R.12.

LEGEND:

- PROPOSED CONDUIT INSTALLATION
- PROPOSED FIBER INSTALLATION
- PROPOSED ANTENNA & BASE LOCATION
- PROPOSED REMOVAL/ REPLACEMENT OF SIDEWALK
- EXISTING STRUCTURE
- EXISTING STRUCTURE (HIDDEN)
- SS — EXISTING SANITARY SEWER UTILITY
- EXISTING SANITARY SEWER MANHOLE
- SD — EXISTING STORM DRAIN PIPE
- EXISTING EXISTING STORM DRAIN CATCH BASIN
- W — EXISTING EXISTING WATER PIPE UTILITY
- EXISTING EXISTING WATER METER UTILITY
- EXISTING WATER HYDRANT
- EXISTING WATER VALVE UTILITY
- RoW — EXISTING RIGHT-OF-WAY LINE
- PL — EXISTING EXISTING PROPERTY LINE
- GAS — EXISTING GAS UTILITY
- EXISTING GAS METER UTILITY
- X — SITE IMAGE REF. SEE NOTE X

Know what's below. Call 811 before you dig.

DATE	NO.	REVISION	BY
X/X/X	0	BID SET	

APPROVED BY:

Rob English, PE

DATE: 3/3/2026

Ben Mahony	DESIGNED BY	2/26/2026 DATE
Ben Mahony	DRAWN BY	2/26/2026 DATE
I-Wen Yang, PE	REVIEWED BY	2/26/2026 DATE

CITY OF KIRKLAND
DEPARTMENT OF PUBLIC WORKS
123 FIFTH AVENUE KIRKLAND, WA 98033
(425) 587–3800 www.kirklandwa.gov

SCADA REPLACEMENT

SOUTH RESERVOIR SITE IMPROVEMENTS

REFERENCE SHEET NO. SR_IMP _01

SHEET 29 of 366

SOUTH RESERVOIR					
PartID	Qty	Specification	Manufacturer Part Number	Description	Manufacturer
118L	1	No Equal	A36P36	Enclosure Backpan, Painted Mild Steel, 33.00" x 33.00"	Hoffman
200B	ASRQ	Or Approved Equal	3044102	Terminal Block, UT4, Gray, 26-10 AWG, 600V, 32A	Phoenix Contact
201B	ASRQ	Or Approved Equal	3044128	Terminal Block, Grounded, UT4-PE, Yellow-Green, 26-10 AWG	Phoenix Contact
202A	ASRQ	Or Approved Equal	3047028	Terminal Block End Barrier, UT2.5/10 Terminals	Phoenix Contact
203A	ASRQ	Or Approved Equal	0800886	Terminal Block End Clamp, 9.5mm Wide	Phoenix Contact
210A	ASRQ	Or Approved Equal	1492-WFB424	Fuse Terminal Block, 5x20mm Fuse, Black, Red LED Indicator, 30-12 AWG, 15A @ 10-57VAC/VDC	Allen-Bradley
221A	ASRQ	Or Approved Equal	S500-250-R	Fuse, 0.25 A, Glass Body, 5x20mm, Fast Acting, 250VAC/60VDC	Bussmann
221B	ASRQ	Or Approved Equal	S500-500-R	Fuse, 0.5 A, Glass Body, 5x20mm, Fast Acting, 250VAC/60VDC	Bussmann
221D	ASRQ	Or Approved Equal	S500-2-R	Fuse, 2 A, Glass Body, 5x20mm, Fast Acting, 250VAC/60VDC	Bussmann
241C	ASRQ	Or Approved Equal	1489-M1C050	Miniature Circuit Breaker, 1-Pole, 5A, Din Rail Mount, 277VAC/48VDC Max, Trip Curve C, 10kA, UL 489 Listed	Allen-Bradley
241E	ASRQ	Or Approved Equal	1489-M1C100	Miniature Circuit Breaker, 1-Pole, 10A, Din Rail Mount, 277VAC/48VDC Max, Trip Curve C, 10kA, UL 489 Listed	Allen-Bradley
241H	ASRQ	Or Approved Equal	1489-M1C200	Miniature Circuit Breaker, 1-Pole, 20A, Din Rail Mount, 277VAC/48VDC Max, Trip Curve C, 10kA, UL 489 Listed	Allen-Bradley
241K	ASRQ	Or Approved Equal	1489-M1C300	Miniature Circuit Breaker, 1-Pole, 30A, Din Rail Mount, 277VAC/48VDC Max, Trip Curve C, 10kA, UL 489 Listed	Allen-Bradley
245A	1	Or Approved Equal	2907918	Surge Arrester, Pluggable Type, 150VAC/DC, 26A (20A for UL Applications)	Phoenix Contact
290A	1	Or Approved Equal	2907161	UPS with integrated power supply, USB (Modbus/RTU), DIN rail mounting, Push-in connection, input: 1-phase, output: 24 V DC / 10 A	Phoenix Contact
290B	1	Or Approved Equal	1348516	Energy storage, VRLA-AGM, 24 V DC, 20 Ah, automatic detection and communication with QUINT UPS-IQ	Phoenix Contact
290C	1	Or Approved Equal	1134645	Battery Mounting Case	Phoenix Contact
307B	ASRQ	Or Approved Equal	700-HK32Z24-4	Slim Line Control Relay, DPDT, 8A Contacts, 24 VDC Coil, Pilot Light	Allen-Bradley
307C	ASRQ	Or Approved Equal	700-HK32A1-4	Slim Line Control Relay, DPDT, 8A Contacts, 120 VAC Coil, Pilot Light	Allen-Bradley
307D	ASRQ	Or Approved Equal	700-HN122	Slim Line Control Relay Base, Mini 8-Blade Base Socket, Screw Terminals	Allen-Bradley
322A	1	Or Approved Equal	5600462	Receptacle, GFCI, 15A/125VAC, DIN rail mounting, duplex	Phoenix Contact
356B	6	Or Approved Equal	800H-JR2B	Selector Switch, 3-Position, Maintained, 30mm, NEMA-4X, 2 NO/2 NC Contact	Allen-Bradley
430A	1	No Equal	IE-3100-8T2C-E	Cisco Catalyst IE3100 Rugged Series - Switch - 8 x 10/100/1000 + 2 x combo Gigabit - DIN rail mountable - PACL, VACL	Cisco
430B	1	No Equal	SD-IE-1GB	Cisco - Flash memory card - 1 GB - SD	Cisco
455A	1	No Equal	cMT3092Xv2	Smart HMI, 9.7", Resolution 1024 x 768, Dark Grey Bezel, 1.6 GHz CPU, 4 GB Flash Memory, 1 GB DRAM, UL Listed, Ethernet, 24VDC	Maple Systems
470A	1	No Equal	MAX-BR1-MINI-LTE-US-T-M-PRM	Peplink MAX BR1 Mini Core LTE - US - No WiFi - No GPS - AC Adapter & 2x SMA Cellular Anetenna Connectors	Peplink
470B	1	No Equal		DC Power Cable ES/GX/MP/RV/LX/IBR	Peplink
470C	1	No Equal	ACW-DIN-BR1-MINI	DIN Rail mount kit	Peplink
471A	2	Or Approved Equal	POLTSX-NFF	Cell Surge Arrestor 0.698-2.7GHz DC Block Coax Protect, N-Female/N-Female connector	PolyPhaser
471B	ASRQ	Or Approved Equal	TIMLMR-400-DB	Watertight LMR400 Cable Black PE Jacket	Times Microwave
471C	ASRQ	Or Approved Equal	R/FCOMP-NM-400	Conn, N-Male Compression Style for Plenum LMR400 Cable	RF Industries
471D	2	Or Approved Equal	ANXTRA6927M3PB-001	3G/4G Multi-Band Phantom Antenna for 698-960/1700-2700 MHz. Black. 3.3" Radome. N Female.	Laird
471E	2	Or Approved Equal	CUSTOM BRACKET	Stainless Steel Custom Bracket - 14"x 02"	Custom
610D	1	No Equal	BMXP342020	Modicon M340 PLC Processor, 1 Modbus Serial Port, 1 Ethernet Port, Max 1024 Discrete & 256 Analog IO	Schneider Electric
611D	1	No Equal	BMXXBP1200	Modicon X80 I/O Platform X-Bus Rack, 12 Slots	Schneider Electric
612B	1	No Equal	BMXCPS3020	Modicon X80 I/O PlatformPower Supply, 32W Output, 24-48 VDC	Schneider Electric
614B	4	No Equal	BMXDDI1602	Modicon X80 Discrete Input Card, 16 Points, 24 VDC	Schneider Electric
615E	1	No Equal	BMXDRA1605	Modicon X80 Relay Output Card, 16 Points, 24 VDC / 24-240 VAC, 2A Max	Schneider Electric
616C	2	No Equal	BMXAMI0810	Modicon X80 Analog Input Module, 8 Points, Voltage/Current, Isolated	Schneider Electric
617C	1	No Equal	BMXAMO0802	Modicon X80 Analog Output Module, 8 Points, Voltage/Current, Non-Isolated	Schneider Electric
619C	5	No Equal	BMXFTB2010	Modicon X80 Removable Terminal Block, 20-Way, Screw Terminals	Schneider Electric
619E	3	No Equal	BMXFTB2800	Modicon X80 Removable Terminal Block, 28-Way, Screw Terminals	Schneider Electric

811 Know what's below. Call 811 before you dig.

DATE	NO.	REVISION	BY
X/X/X	0	BID SET	

APPROVED BY:

Rob English, PE

DATE: 3/3/2026

Ben Mahony — DESIGNED BY — 2/26/2026 DATE

Ben Mahony — DRAWN BY — 2/26/2026 DATE

I-Wen Yang, PE — REVIEWED BY — 2/26/2026 DATE

CITY OF KIRKLAND WASHINGTON

CITY OF KIRKLAND

DEPARTMENT OF PUBLIC WORKS
123 FIFTH AVENUE KIRKLAND, WA 98033
(425) 587–3800 www.kirklandwa.gov

SCADA REPLACEMENT

SOUTH RESERVOIR - BILL OF MATERIALS

REFERENCE SHEET NO. SR_BM_01

SHEET 30 of 366

		PANEL NAME:	SOUTH RESERVOIR															
		PANEL NUMBER:	CP1															
TAG PREFIX	LOOP DESC. 1	LOOP DESC. 2	LOOP #	PLC/HMI TAG	DESCRIPTION 1	DESCRIPTION 2	DESCRIPTION 3	FUNCTION	TYPE	Rack	Slot	Point	Units	Min	Max	P&ID Dwg	NOTES
			-		SPARE				DI	1	1	0					
			-		SPARE				DI	1	1	1					
			-		SPARE				DI	1	1	2					
			-		VFD-01			IN HAND	DI	1	1	3					
			-		VFD-01			IN AUTO	DI	1	1	4					
			-		VFD-01			RUNNING	DI	1	1	5					
			-		VFD-01			FAULT	DI	1	1	6					
			-		FLOW SWITCH	500		ALARM	DI	1	1	7					
			-		SPARE				DI	1	1	8					
			-		VFD-02			IN HAND	DI	1	1	9					
			-		VFD-02			IN AUTO	DI	1	1	10					
			-		VFD-02			RUNNING	DI	1	1	11					
			-		VFD-02			FAULT	DI	1	1	12					
			-		FLOW SWITCH	600		ALARM	DI	1	1	13					
			-		SPARE				DI	1	1	14					
			-		SPARE				DI	1	1	15					
			-		SPARE				DI	1	2	0					
			-		SPARE				DI	1	2	1					
			-		VFD-03			IN HAND	DI	1	2	2					
			-		VFD-03			IN AUTO	DI	1	2	3					
			-		VFD-03			RUNNING	DI	1	2	4					
			-		VFD-03			FAULT	DI	1	2	5					
			-		FLOW SWITCH	200		ALARM	DI	1	2	6					
			-		SPARE				DI	1	2	7					
			-		SPARE				DI	1	2	8					
			-		VFD-04			IN HAND	DI	1	2	9					
			-		VFD-04			IN AUTO	DI	1	2	10					
			-		VFD-04			RUNNING	DI	1	2	11					
			-		VFD-04			FAULT	DI	1	2	12					
			-		FLOW SWITCH	800		ALARM	DI	1	2	13					
			-		SPARE				DI	1	2	14					
			-		SPARE				DI	1	2	15					
			-		VFD-05			IN HAND	DI	1	3	0					
			-		VFD-05			IN AUTO	DI	1	3	1					
			-		VFD-05			RUNNING	DI	1	3	2					
			-		VFD-05			FAULT	DI	1	3	3					
			-		TEMPERATURE SWITCH	300		ALARM	DI	1	3	4					
			-		SPARE				DI	1	3	5					
			-		SPARE				DI	1	3	6					
			-		SPARE				DI	1	3	7					
			-		VFD-06			IN HAND	DI	1	3	8					
			-		VFD-06			IN AUTO	DI	1	3	9					
			-		VFD-06			RUNNING	DI	1	3	10					
			-		VFD-06			FAULT	DI	1	3	11					
			-		TEMPERATURE SWITCH	400		ALARM	DI	1	3	12					
			-		SPARE				DI	1	3	13					
			-		GENERATOR			RUNNING	DI	1	3	14					
			-		GENERATOR			FAIL	DI	1	3	15					
			-		GENERATOR ROOM	SMOKE		ALARM	DI	1	4	0					

		PANEL NAME:	SOUTH RESERVOIR															
		PANEL NUMBER:	CP1															
TAG PREFIX	LOOP DESC. 1	LOOP DESC. 2	LOOP #	PLC/HMI TAG	DESCRIPTION 1	DESCRIPTION 2	DESCRIPTION 3	FUNCTION	TYPE	Rack	Slot	Point	Units	Min	Max	P&ID Dwg	NOTES
			-		PUMP ROOM	SMOKE		ALARM	DI	1	4	1					
			-		STORAGE ROOM	SMOKE		ALARM	DI	1	4	2					
			-		SPARE				DI	1	4	3					
			-		SPARE				DI	1	4	4					
			-		STORAGE ROOM			INTRUSION	DI	1	4	5					
			-		NORTH PUMP ROOM			INTRUSION	DI	1	4	6					
			-		SOUTH PUMP ROOM			INTRUSION	DI	1	4	7					
			-		GENERATOR ROOM			INTRUSION	DI	1	4	8					
			-		VAULT			FLOOD	DI	1	4	9					
			-		SPARE				DI	1	4	10					
			-		HIGH			FLOOD	DI	1	4	11					
			-		120VAC Control Power			Fail	DI	1	4	12					
			-		24VDC Control Power			Fail	DI	1	4	13					
			-		DC UPS			On Battery	DI	1	4	14					
			-		DC UPS			Alarm	DI	1	4	15					
			-		PUMP 1			CALL TO RUN	DO	1	5	0					
			-		PUMP 1	PLC STATUS		FAULT	DO	1	5	1					
			-		PUMP 2			CALL TO RUN	DO	1	5	2					
			-		SPARE				DO	1	5	3					
			-		PUMP 3			CALL TO RUN	DO	1	5	4					
			-		SPARE				DO	1	5	5					
			-		PUMP 4			CALL TO RUN	DO	1	5	6					
			-		SPARE				DO	1	5	7					
			-		PUMP 5			CALL TO RUN	DO	1	5	8					
			-		VFD05	FAULTS		CLEAR	DO	1	5	9					
			-		PUMP 6			CALL TO RUN	DO	1	5	10					
			-		VFD06	FAULTS		CLEAR	DO	1	5	11					
			-		SPARE				DO	1	5	12					
			-		SPARE				DO	1	5	13					
			-		SPARE				DO	1	5	14					
			-		SPARE				DO	1	5	15					
			-		PUMP NO. 1			SPEED FEEDBACK	AI	1	6	0	%	0	100		
			-		PUMP NO. 2			SPEED FEEDBACK	AI	1	6	1	%	0	100		
			-		PUMP NO. 3			SPEED FEEDBACK	AI	1	6	2	%	0	100		
			-		PUMP NO. 4			SPEED FEEDBACK	AI	1	6	3	%	0	100		
			-		PUMP NO. 5			SPEED FEEDBACK	AI	1	6	4	%	0	100		
			-		PUMP NO. 6			SPEED FEEDBACK	AI	1	6	5	%	0	100		
			-		PUMP 1	DISCHARGE		PRESSURE	AI	1	6	6					
			-		ANALOG POWER			AVAILABLE	AI	1	6	7					
			-		545 ZONE	20" MAIN		FLOW	AI	1	7	0	GPM	0	6000		
			-		545 ZONE	16" MAIN		FLOW	AI	1	7	1	GPM	0	4000		
			-		650 ZONE			FLOW	AI	1	7	2	GPM	0	6000		
			-		RESERVOIR			PRESSURE	AI	1	7	3	PSI	0	100		
			-		PUMP 2	DISCHARGE		PRESSURE	AI	1	7	4					
			-		650 ZONE			PRESSURE	AI	1	7	5	PSI	0	150		
			-		650 ZONE	(BACKUP METER)		PRESSURE	AI	1	7	6	PSI	0	150		
			-		545 ZONE	12" MAIN		FLOW	AI	1	7	7	GPM	0	6000		
			-		PUMP 1			SPEED COMMAND	AO	1	8	0	%	0	100		
			-		PUMP 2			SPEED COMMAND	AO	1	8	1	%	0	100		
			-		PUMP 3			SPEED COMMAND	AO	1	8	2	%	0	100		
			-		PUMP 4			SPEED COMMAND	AO	1	8	3	%	0	100		
			-		PUMP 5			SPEED COMMAND	AO	1	8	4	%	0	100		
			-		PUMP 6			SPEED COMMAND	AO	1	8	5	%	0	100		
			-		SPARE				AO	1	8	6					
			-		SPARE				AO	1	8	7					

Know what's below. Call 811 before you dig.

DATE	NO.	REVISION	BY
X/X/X	0	BID SET	

APPROVED BY:

Rob English, PE

DATE: 3/3/2026

Ben Mahony DESIGNED BY 2/26/2026 DATE

Ben Mahony DRAWN BY 2/26/2026 DATE

I-Wen Yang, PE REVIEWED BY 2/26/2026 DATE

CITY OF KIRKLAND WASHINGTON

CITY OF KIRKLAND

DEPARTMENT OF PUBLIC WORKS
123 FIFTH AVENUE KIRKLAND, WA 98033
(425) 587–3800 www.kirklandwa.gov

SCADA REPLACEMENT

SOUTH RESERVOIR - I/O LIST (2)

REFERENCE SHEET NO. SR_IO_02

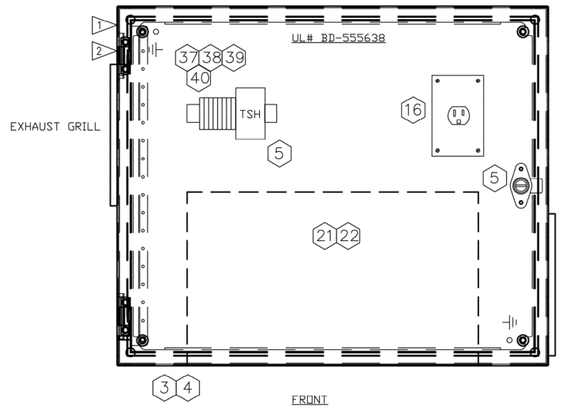

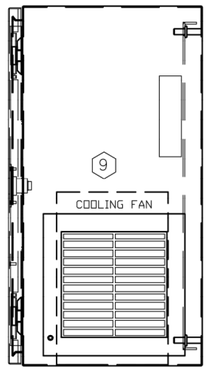

RTU UPS PANEL EXTERIOR ELEVATION

CONSTRUCTION NOTES:

1. CONTRACTOR SHALL CONSULT WITH CITY TO DETERMINE MOUNTING LOCATION.
2. UPS LOCATED IN SEPARATE ENCLOSURE. LOCATE ADJACENT TO RTU PANEL. CONNECT RTU AND UPS PANEL WITH TWO 3/4" CONDUITS. ONE CONDUIT SHALL CONTAIN POWER WIRING FOR UPS. ONE CONDUIT SHALL CONTAIN THE CAT.5 ETHERNET CABLE TO CONNECT THE UPS TO THE N-TRON ETHERNET SWITCH.

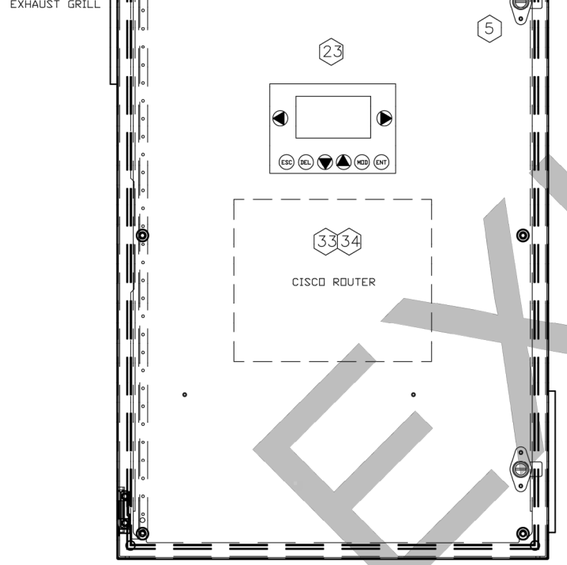

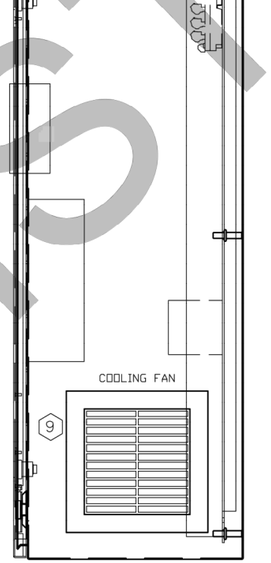

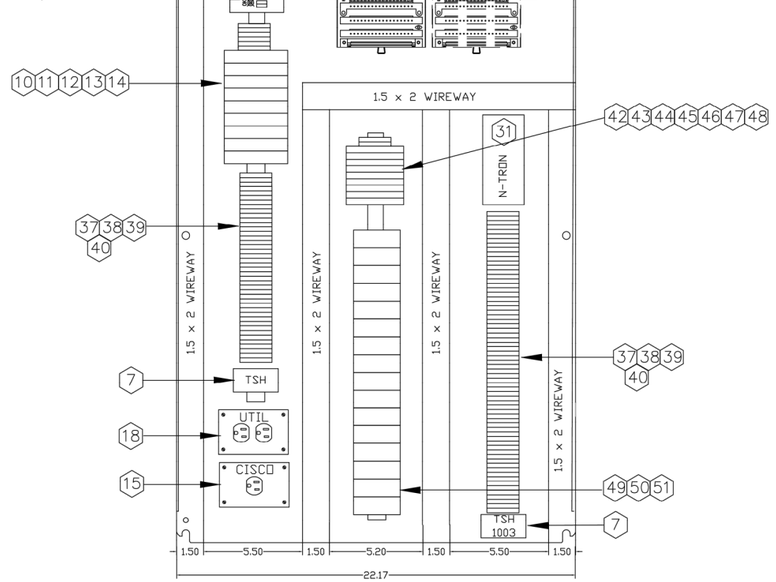

RTU PANEL EXTERIOR ELEVATION

RTU PANEL INTERIOR ELEVATION

SCALE 1-1/2" = 1.0 Ft.

EXISTING

Know what's below. Call 811 before you dig.

DATE	NO.	REVISION	BY
X/X/X	0	BID SET	

APPROVED BY:

Rob English, PE

DATE: 3/3/2026

Ben Mahony DESIGNED BY 2/26/2026 DATE

Ben Mahony DRAWN BY 2/26/2026 DATE

I-Wen Yang, PE REVIEWED BY 2/26/2026 DATE

CITY OF KIRKLAND WASHINGTON

CITY OF KIRKLAND
DEPARTMENT OF PUBLIC WORKS
123 FIFTH AVENUE KIRKLAND, WA 98033
(425) 587-3800 www.kirklandwa.gov

650ZONE PUMP STATION RTU L, ELEVATIONS
SCADA REPLACEMENT
SOUTH RESERVOIR EXISTING CONTROL PANEL (REFERENCE)

REFERENCE SHEET NO. 650-J01

SHEET 33 of 366

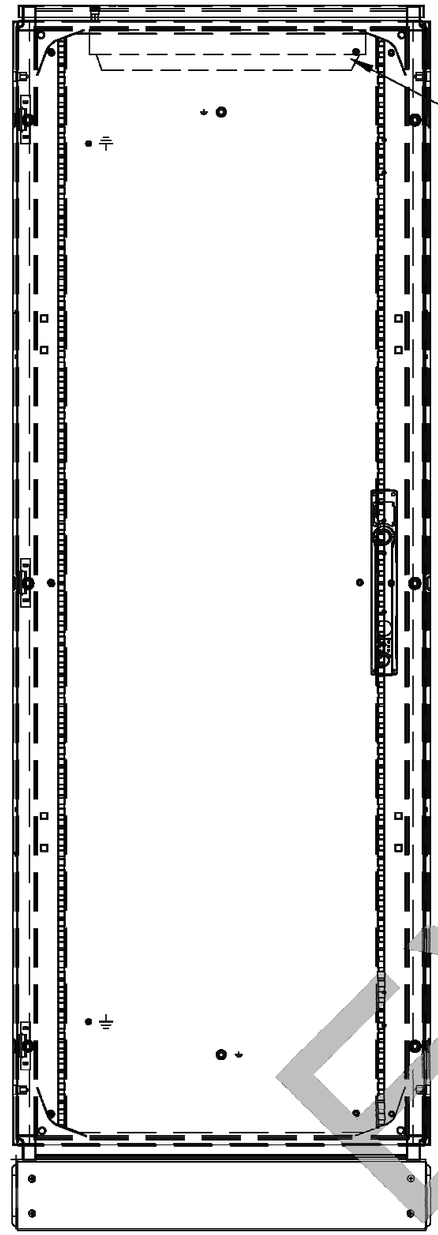

MTU–FEP PANEL FRONT ELEVATION

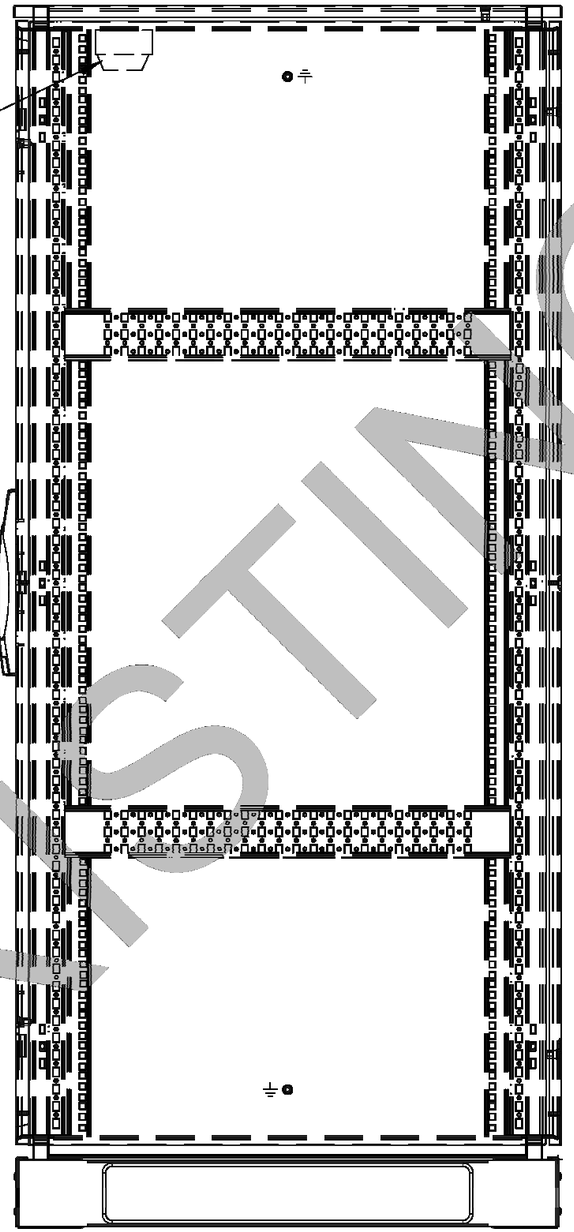

MTU–FEP PANEL SIDE ELEVATION

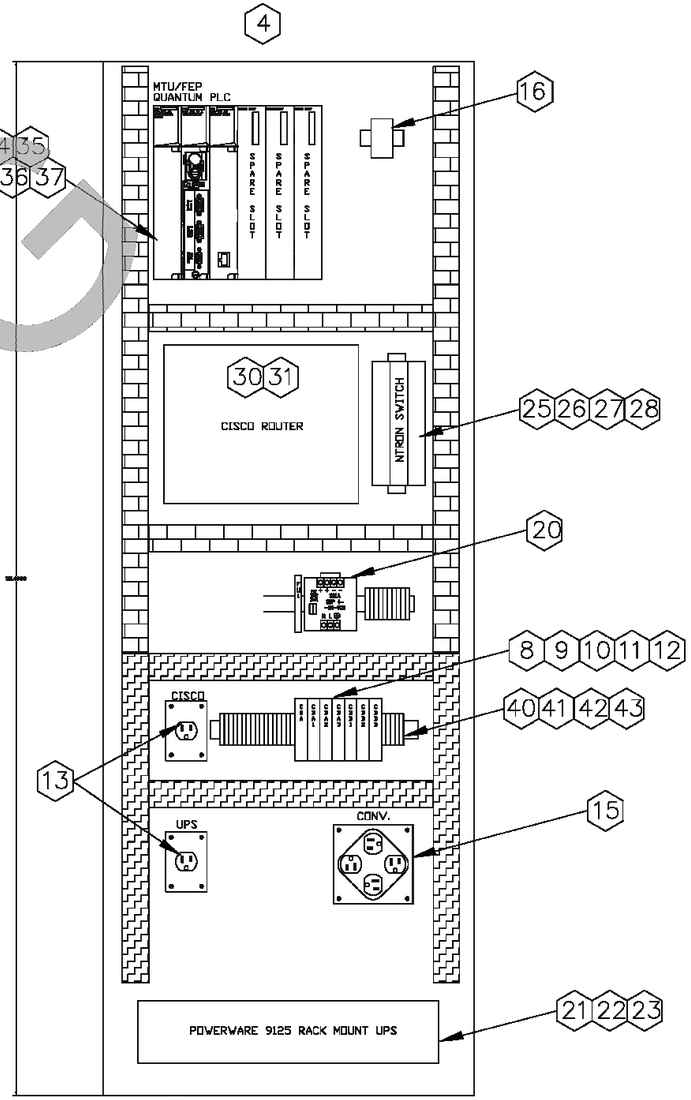

MTU–FEP PANEL INTERIOR ELEVATION

EXISTING

Know what's below. Call 811 before you dig.

DATE	NO.	REVISION	BY
X/X/X	0	BID SET	

APPROVED BY:

Rob English, PE

DATE: 3/3/2026

Ben Mahony	DESIGNED BY	2/26/2026 DATE
Ben Mahony	DRAWN BY	2/26/2026 DATE
I-Wen Yang, PE	REVIEWED BY	2/26/2026 DATE

CITY OF KIRKLAND WASHINGTON

CITY OF KIRKLAND
DEPARTMENT OF PUBLIC WORKS
123 FIFTH AVENUE KIRKLAND, WA 98033
(425) 587–3800 www.kirklandwa.gov

MTU-FEP PANEL, ELEVATIONS
SCADA REPLACEMENT

SOUTH RESERVOIR EXISTING CONTROL PANEL (REFERENCE)

REFERENCE SHEET NO.
MTU-J01

SHEET 34 of 366

MTU/FEP
QUANTUM PLC

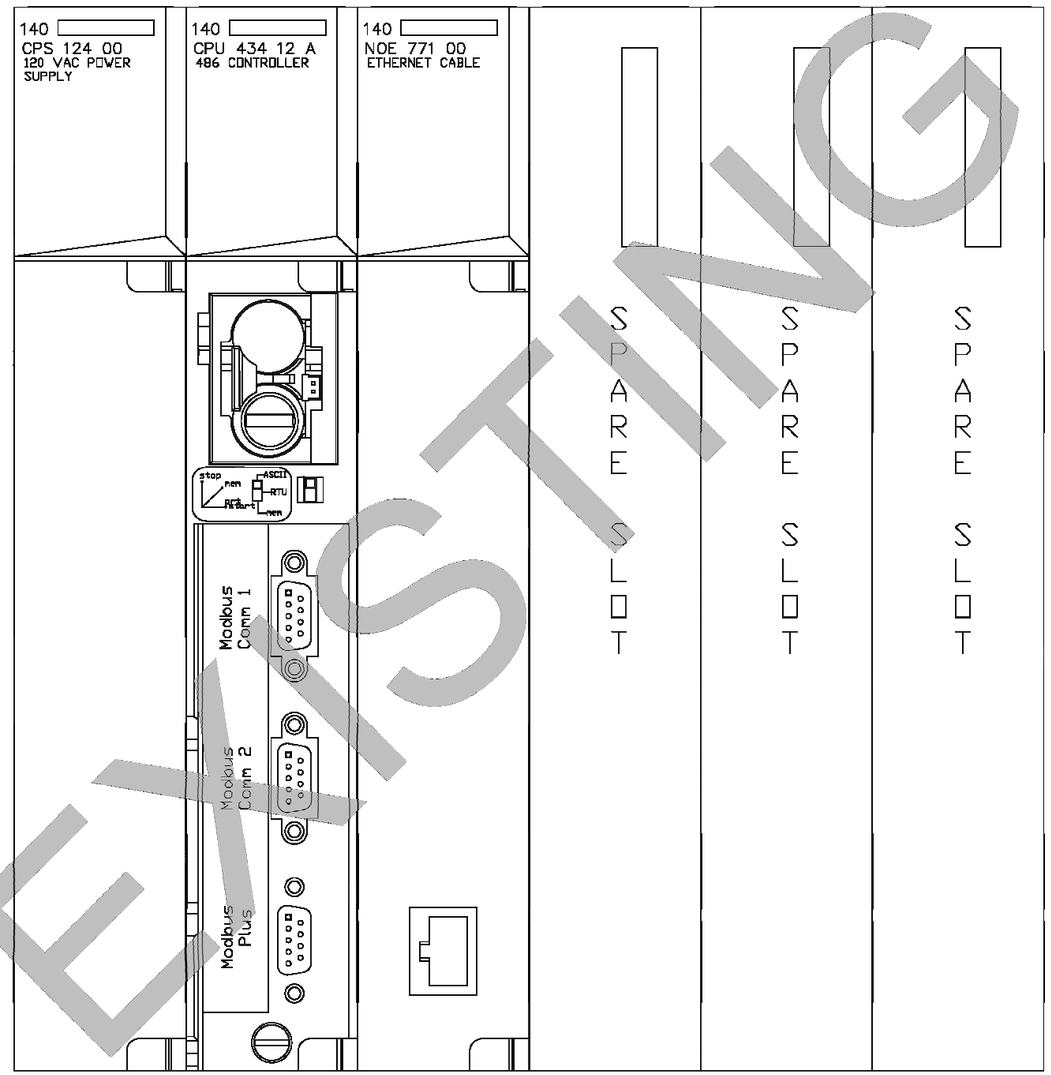

EXISTING

Know what's below. Call 811 before you dig.

DATE	NO.	REVISION	BY
X/X/X	0	BID SET	

APPROVED BY:

Rob English, PE

DATE: 3/3/2026

Ben Mahony	DESIGNED BY	2/26/2026 DATE
Ben Mahony	DRAWN BY	2/26/2026 DATE
I-Wen Yang, PE	REVIEWED BY	2/26/2026 DATE

CITY OF KIRKLAND

DEPARTMENT OF PUBLIC WORKS
123 FIFTH AVENUE KIRKLAND, WA 98033
(425) 587-3800 www.kirklandwa.gov

MTU-FEP MODULE, LAYOUT

SCADA REPLACEMENT

SOUTH RESERVOIR EXISTING CONTROL PANEL (REFERENCE)

REFERENCE SHEET NO.
MTU-J02

SHEET
35
of
366

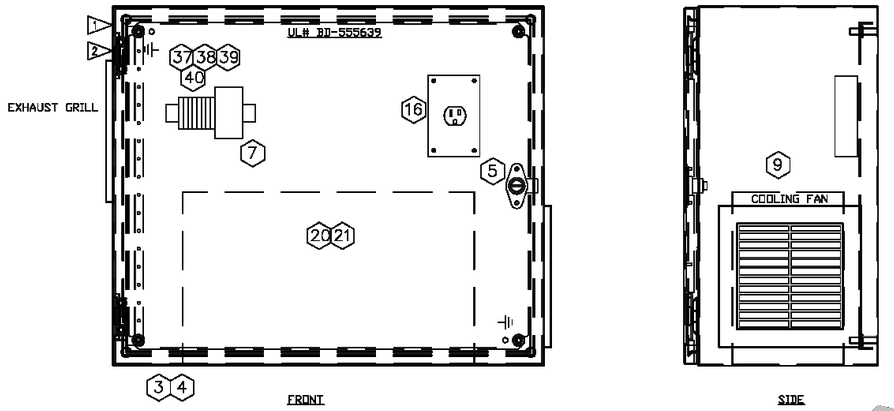

RTU UPS PANEL EXTERIOR ELEVATION

CONSTRUCTION NOTES:

1. CONTRACTOR SHALL CONSULT WITH CITY TO DETERMINE MOUNTING LOCATION.
2. UPS LOCATED IN SEPARATE ENCLOSURE. LOCATE ADJACENT TO RTU PANEL. CONNECT RTU AND UPS PANEL WITH TWO 3/4" CONDUITS. ONE CONDUIT SHALL CONTAIN POWER WIRING FOR UPS. ONE CONDUIT SHALL CONTAIN THE CAT.5 ETHERNET CABLE TO CONNECT THE UPS TO THE N-TRON ETHERNET SWITCH.

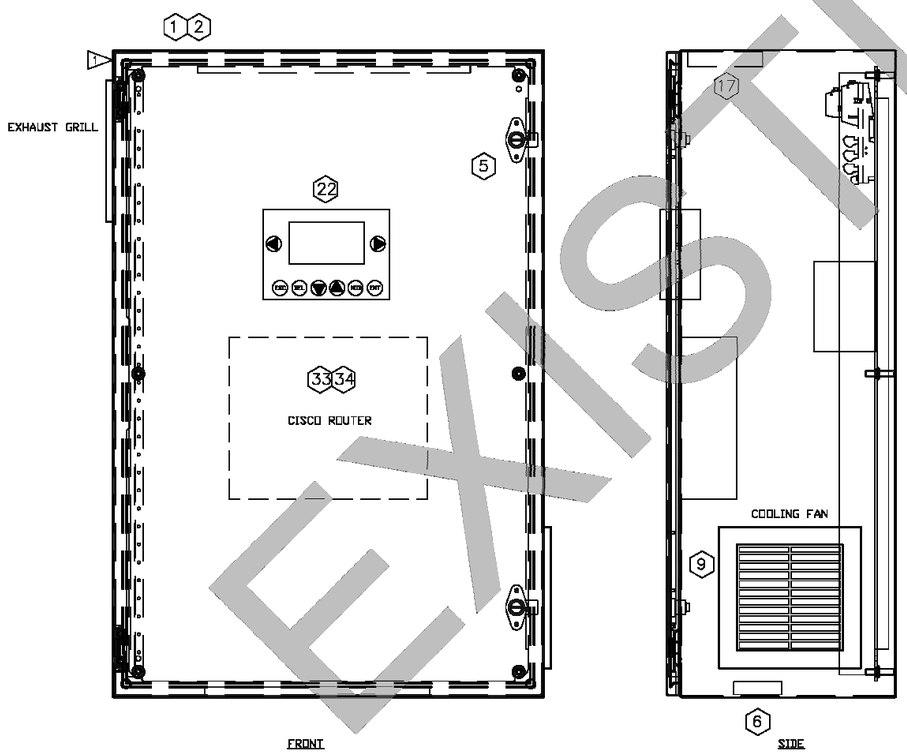

RTU PANEL EXTERIOR ELEVATION

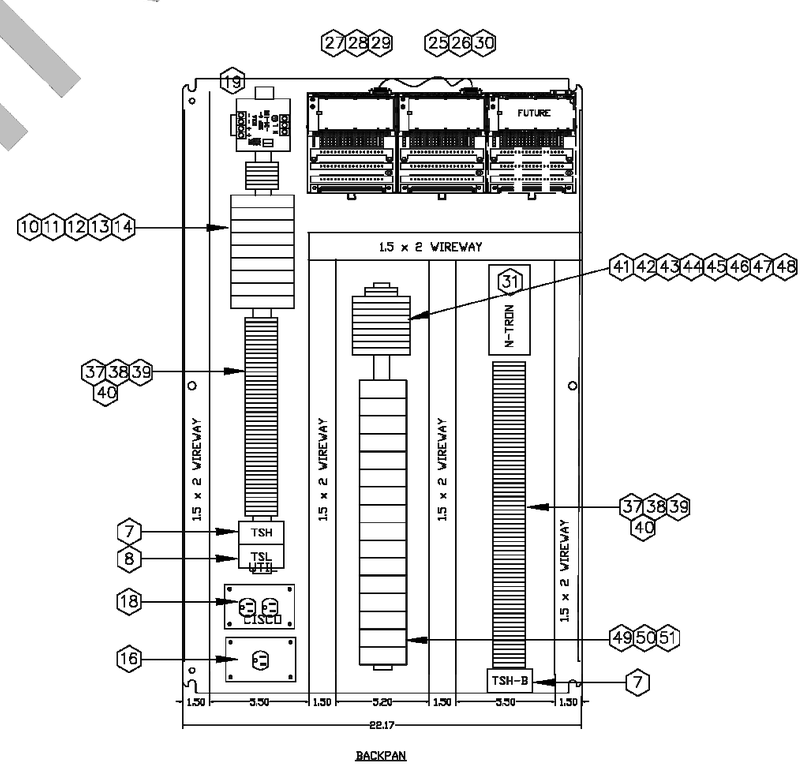

RTU PANEL INTERIOR ELEVATION

SCALE 1-1/2" = 1.0 Ft.

EXISTING

DATE	NO.	REVISION	BY
X/X/X	0	BID SET	

APPROVED BY:

Rob English, PE

DATE: 3/3/2026

Ben Mahony	DESIGNED BY	2/26/2026 DATE
Ben Mahony	DRAWN BY	2/26/2026 DATE
I-Wen Yang, PE	REVIEWED BY	2/26/2026 DATE

CITY OF KIRKLAND

DEPARTMENT OF PUBLIC WORKS
123 FIFTH AVENUE KIRKLAND, WA 98033
(425) 587-3800 www.kirklandwa.gov

ROSE POINT LIFT STATION RTU B, ELEVATIONS
SCADA REPLACEMENT
SOUTH RESERVOIR EXISTING CONTROL PANEL (REFERENCE)

REFERENCE SHEET NO. ROSE-J01

SHEET 36 of 366

GENERAL NOTES:

1. ALL ETHERNET SWITCHES SHALL HAVE AT LEAST ONE SPARE PORT AFTER ALL LOCAL DEVICES ARE CONNECTED.

CONSTRUCTION NOTES:

1. EXISTING.
2. NEW PROVIDED BY OTHERS.

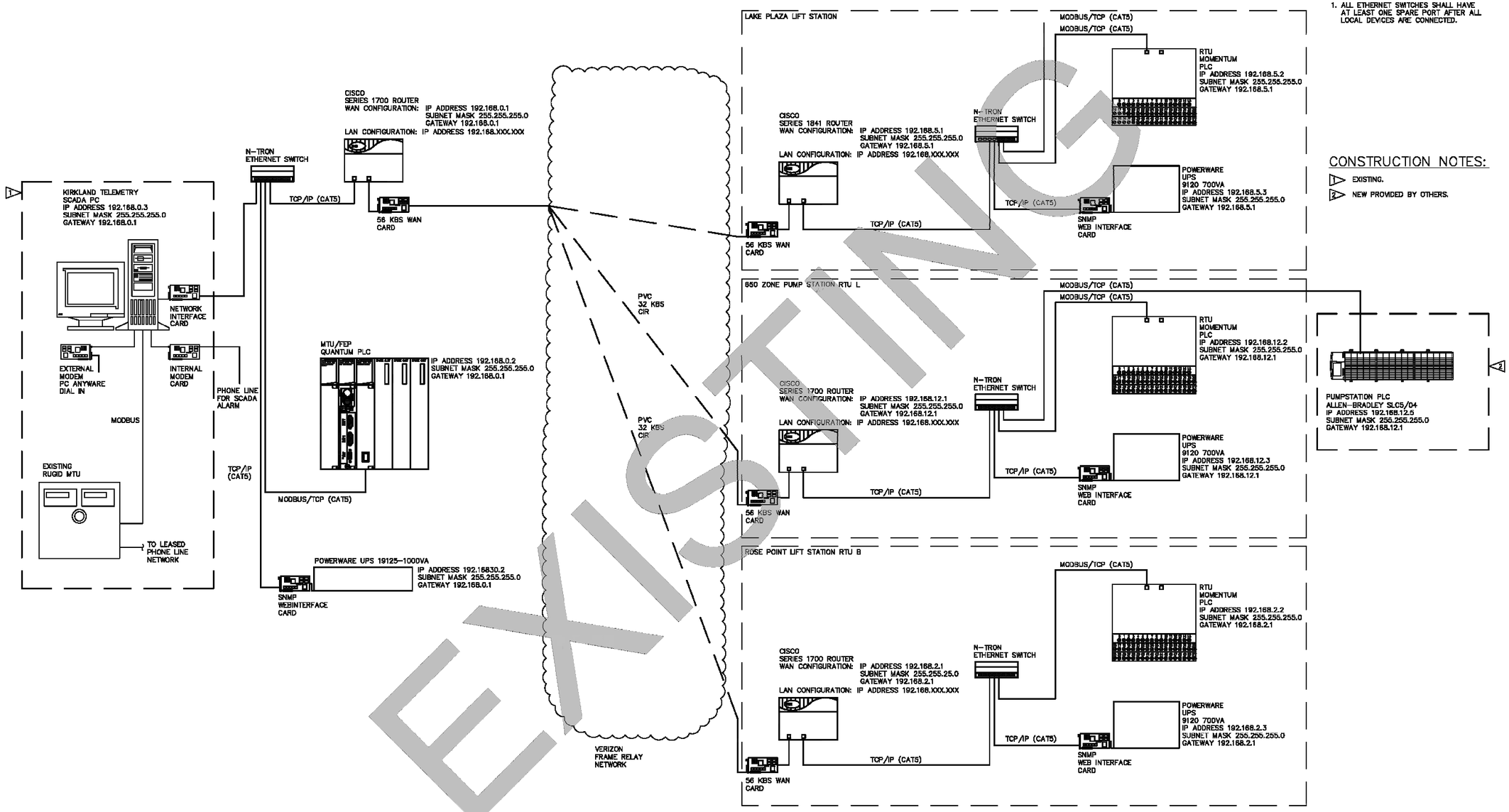

EXISTING

Know what's below. Call 811 before you dig.

DATE	NO.	REVISION	BY
X/X/X	0	BID SET	

APPROVED BY:

Rob English, PE

DATE: 3/3/2026

Ben Mahony — DESIGNED BY — 2/26/2026 DATE

Ben Mahony — DRAWN BY — 2/26/2026 DATE

I-Wen Yang, PE — REVIEWED BY — 2/26/2026 DATE

CITY OF KIRKLAND

DEPARTMENT OF PUBLIC WORKS
123 FIFTH AVENUE KIRKLAND, WA 98033
(425) 587-3800 www.kirklandwa.gov

NETWORK DIAGRAM, ONE LINE
SCADA REPLACEMENT
SOUTH RESERVOIR EXISTING CONTROL PANEL (REFERENCE)

REFERENCE SHEET NO. SR_B01

SHEET 37 of 366

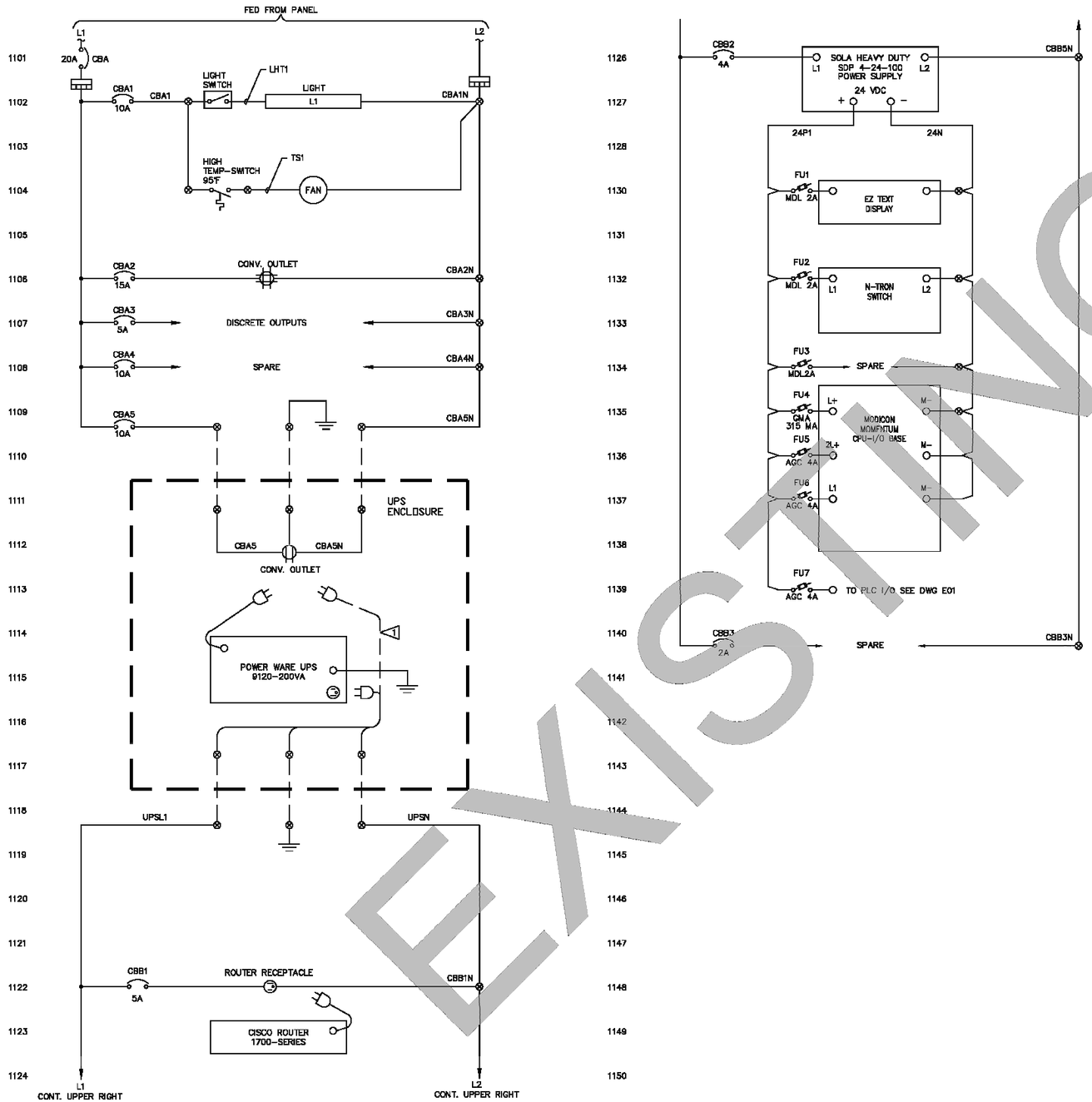

CONSTRUCTION NOTES:

1. THE POWER CORD CONNECTED TO THE OUTPUT OF THE UPS SHALL BE LONG ENOUGH TO CONNECT DIRECTLY TO THE UPS RECEPTACLE. THIS WILL ALLOW THE UPS TO BE BYPASSED EASILY IN THE EVENT OF FAILURE.

EXISTING

Know what's below. Call 811 before you dig.

DATE	NO.	REVISION	BY
X/X/X	0	BID SET	

APPROVED BY:

Rob English, PE

DATE: 3/3/2026

Ben Mahony	DESIGNED BY	2/26/2026 DATE
Ben Mahony	DRAWN BY	2/26/2026 DATE
I-Wen Yang, PE	REVIEWED BY	2/26/2026 DATE

CITY OF KIRKLAND
DEPARTMENT OF PUBLIC WORKS
123 FIFTH AVENUE KIRKLAND, WA 98033
(425) 587-3800 www.kirklandwa.gov

650 ZONE PANEL RTU L, POWER DISTRIBUTION DIAGRAM
SCADA REPLACEMENT
SOUTH RESERVOIR EXISTING CONTROL PANEL (REFERENCE)

REFERENCE SHEET NO. 650-P1

SHEET 38 of 366

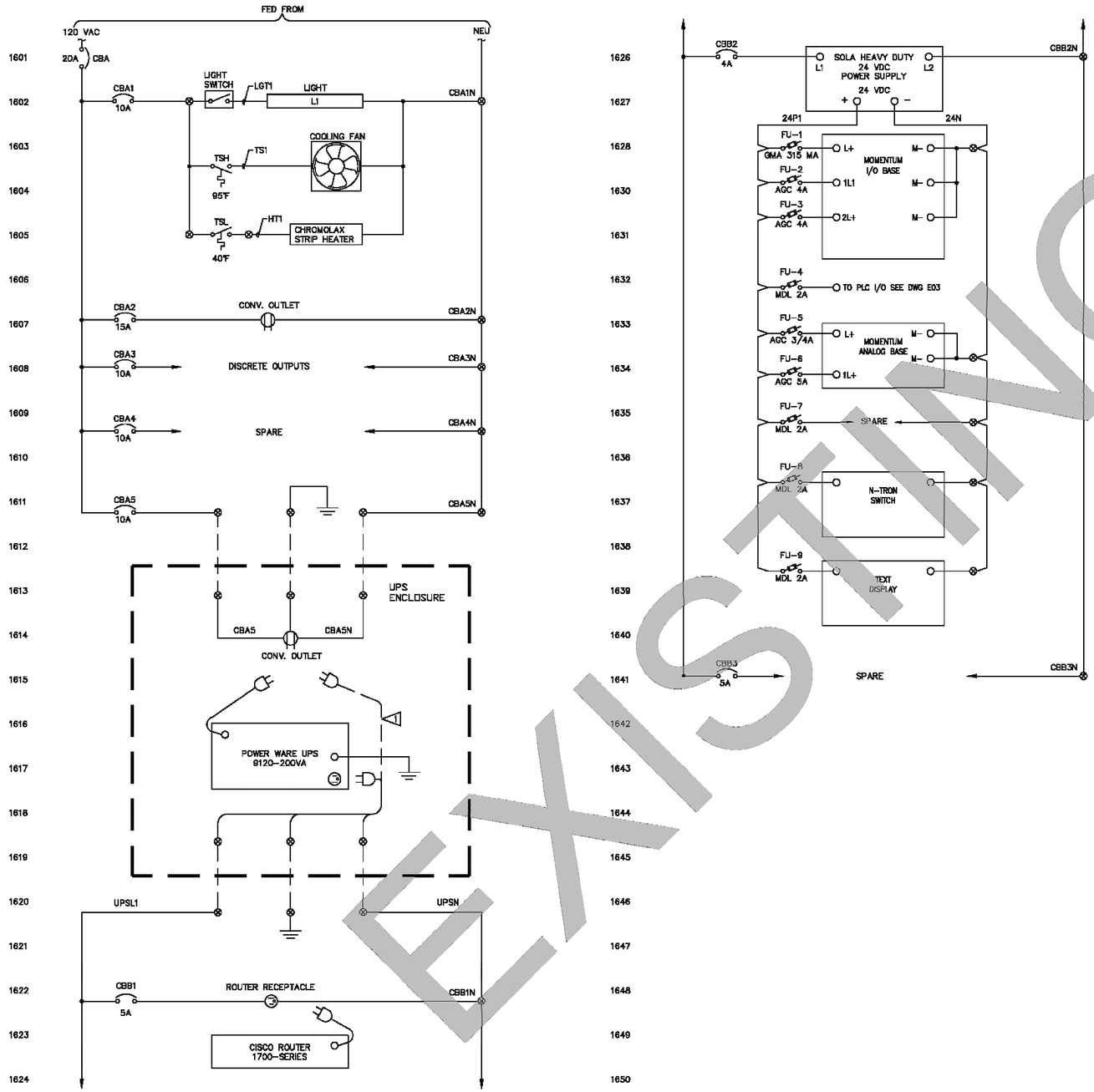

CONSTRUCTION NOTES:

1. THE POWER CORD CONNECTED TO THE OUTPUT OF THE UPS SHALL BE LONG ENOUGH TO CONNECT DIRECTLY TO THE UPS RECEPTACLE. THIS WILL ALLOW THE UPS TO BE BYPASSED EASILY IN THE EVENT OF FAILURE.

EXISTING

Know what's below. Call 811 before you dig.

DATE	NO.	REVISION	BY
X/X/X	0	BID SET	

APPROVED BY:

Rob English, PE

DATE: 3/3/2026

Ben Mahony	DESIGNED BY	2/26/2026 DATE
Ben Mahony	DRAWN BY	2/26/2026 DATE
I-Wen Yang, PE	REVIEWED BY	2/26/2026 DATE

CITY OF KIRKLAND

DEPARTMENT OF PUBLIC WORKS
123 FIFTH AVENUE KIRKLAND, WA 98033
(425) 587-3800 www.kirklandwa.gov

ROSE POINT LIFT STATION RTU B, POWER DISTRIBUTION

SCADA REPLACEMENT

SOUTH RESERVOIR EXISTING CONTROL PANEL (REFERENCE)

REFERENCE SHEET NO. ROSE-P01

SHEET 39 of 366

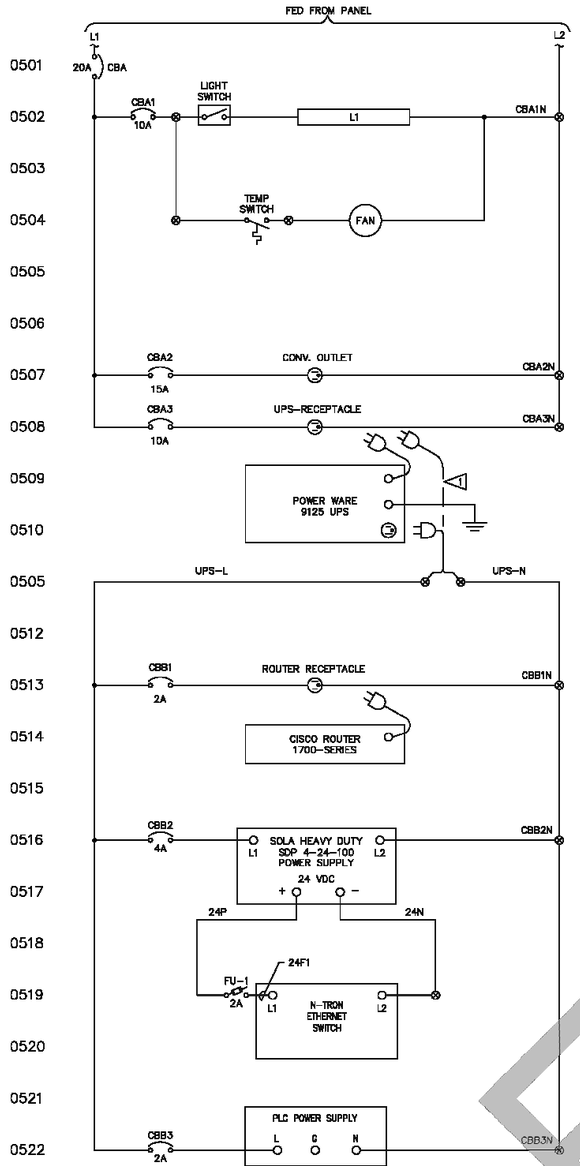

CONSTRUCTION NOTES:

1. THE POWER CORD CONNECTED TO THE OUTPUT OF THE UPS SHALL BE LONG ENOUGH TO CONNECT DIRECTLY TO THE UPS RECEPTACLE. THIS WILL ALLOW THE UPS TO BE BYPASSED EASILY IN THE EVENT OF FAILURE.

EXISTING

Know what's below. Call 811 before you dig.

DATE	NO.	REVISION	BY
X/X/X	0	BID SET	

APPROVED BY:

Rob English, PE

DATE: 3/3/2026

Ben Mahony	DESIGNED BY	2/26/2026 DATE
Ben Mahony	DRAWN BY	2/26/2026 DATE
I-Wen Yang, PE	REVIEWED BY	2/26/2026 DATE

CITY OF KIRKLAND

DEPARTMENT OF PUBLIC WORKS
123 FIFTH AVENUE KIRKLAND, WA 98033
(425) 587-3800 www.kirklandwa.gov

MTU-FEP PANEL, POWER DISTRIBUTION

SCADA REPLACEMENT

SOUTH RESERVOIR EXISTING CONTROL PANEL (REFERENCE)

REFERENCE SHEET NO.
MTU-P01

SHEET 40 of 366

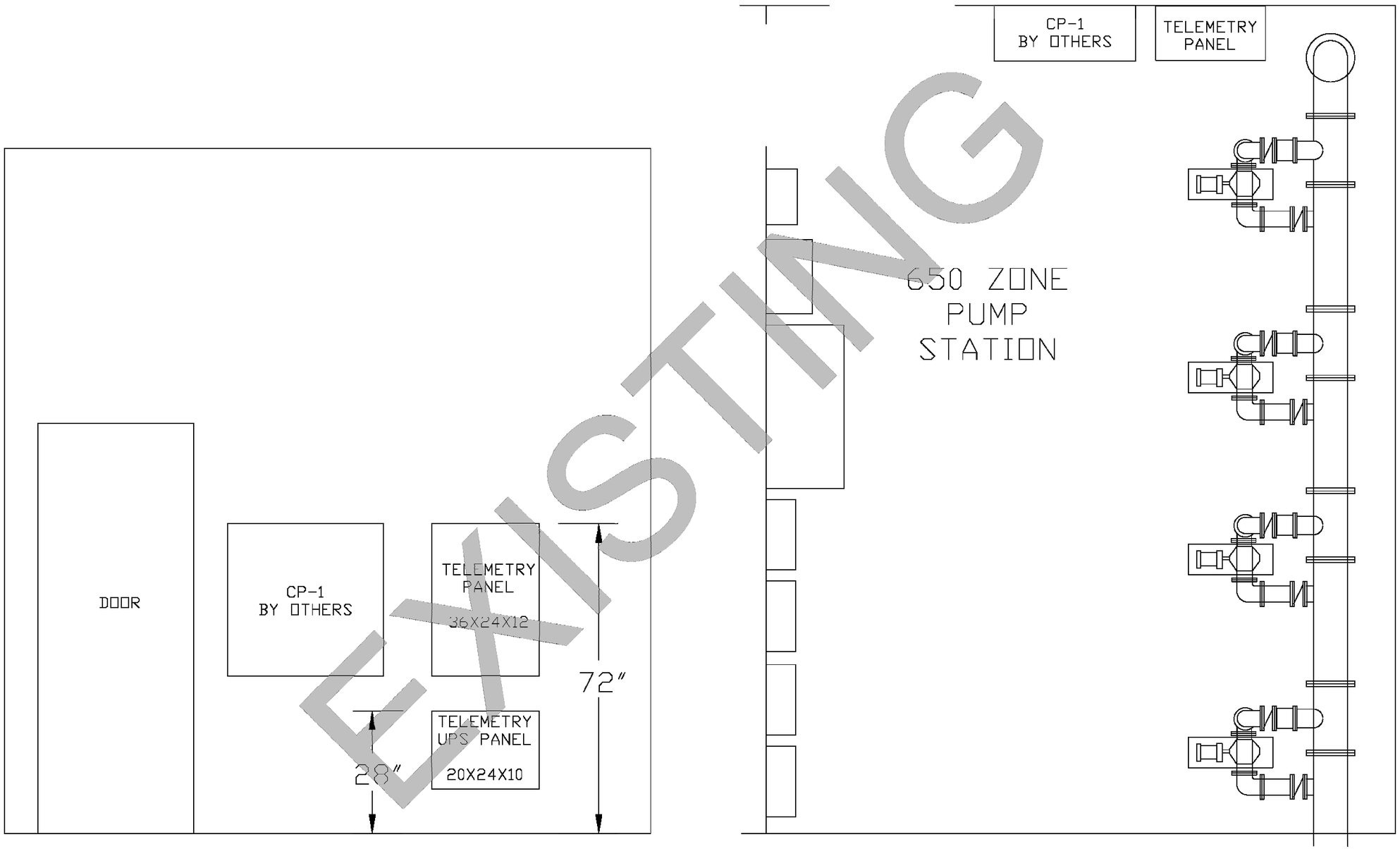

EXISTING

Know what's below. Call 811 before you dig.

DATE	NO.	REVISION	BY
X/X/X	0	BID SET	

APPROVED BY:

Rob English, PE

DATE: 3/3/2026

Ben Mahony — DESIGNED BY — 2/26/2026 DATE

Ben Mahony — DRAWN BY — 2/26/2026 DATE

I-Wen Yang, PE — REVIEWED BY — 2/26/2026 DATE

CITY OF KIRKLAND

DEPARTMENT OF PUBLIC WORKS
123 FIFTH AVENUE KIRKLAND, WA 98033
(425) 587-3800 www.kirklandwa.gov

650 ZONE PUMP STATION RTU L, ROOM LAYOUT DRAWING

SCADA REPLACEMENT

SOUTH RESERVOIR EXISTING CONTROL PANEL (REFERENCE)

REFERENCE SHEET NO.
650-EL01

SHEET 41 of 366

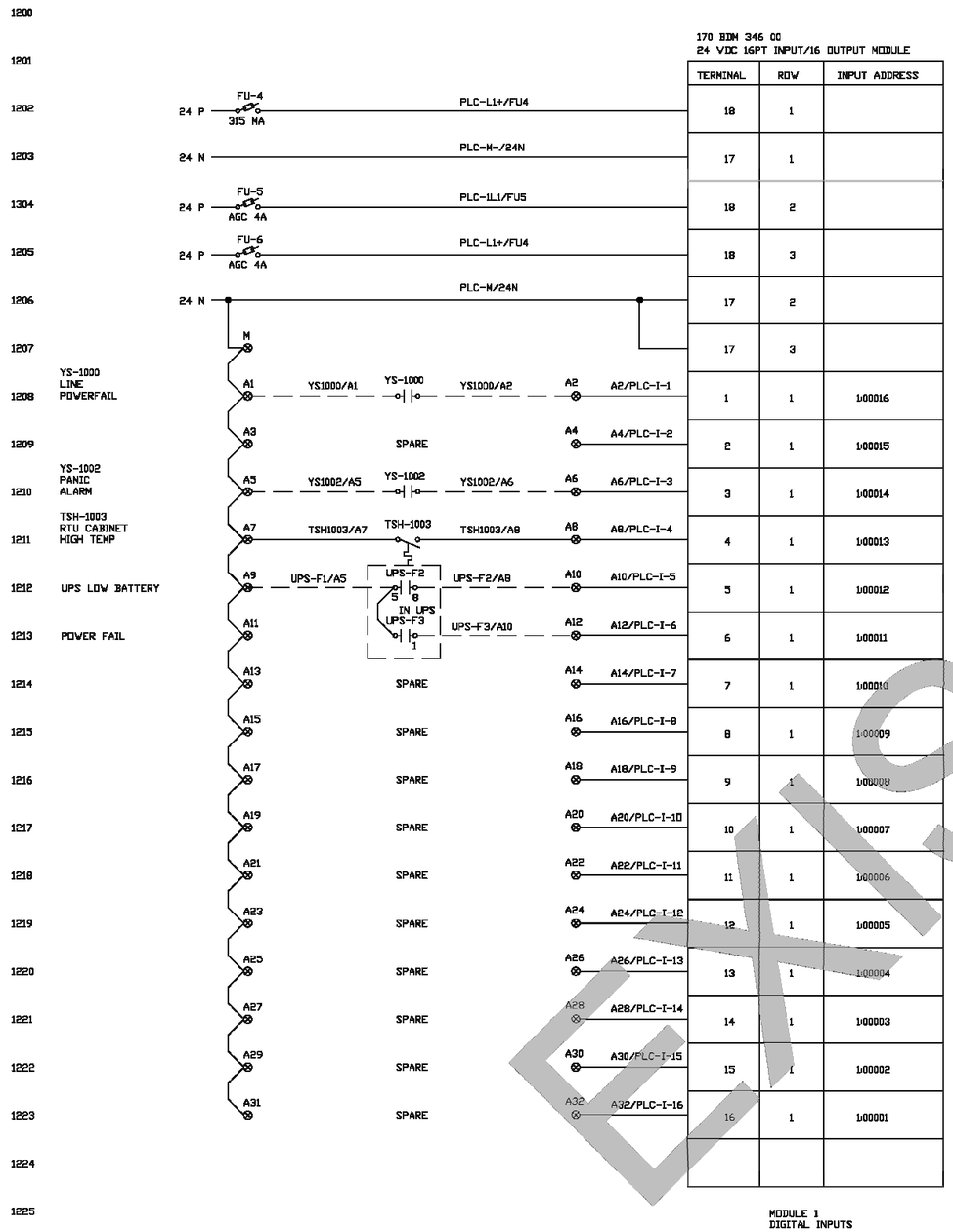

170 BIM 346 00
24 VDC 16PT INPUT/16 OUTPUT MODULE

TERMINAL	ROW	INPUT ADDRESS
18	1	
17	1	
18	2	
18	3	
17	2	
17	3	
1	1	100016
2	1	100015
3	1	100014
4	1	100013
5	1	100012
6	1	100011
7	1	100010
8	1	100009
9	1	100008
10	1	100007
11	1	100006
12	1	100005
13	1	100004
14	1	100003
15	1	100002
16	1	100001

MODULE 1
DIGITAL INPUTS

EXISTING

Know what's below. Call 811 before you dig.

DATE	NO.	REVISION	BY
X/X/X	0	BID SET	

APPROVED BY:

Rob English, PE

DATE: 3/3/2026

Ben Mahony 2/26/2026
DESIGNED BY DATE

Ben Mahony 2/26/2026
DRAWN BY DATE

I-Wen Yang, PE 2/26/2026
REVIEWED BY DATE

CITY OF KIRKLAND

CITY OF KIRKLAND
DEPARTMENT OF PUBLIC WORKS
123 FIFTH AVENUE KIRKLAND, WA 98033
(425) 587-3800 www.kirklandwa.gov

650 ZONE PUMP STATION RTU L, I/O WIRING DIAGRAM (1)

SCADA REPLACEMENT

SOUTH RESERVOIR EXISTING CONTROL PANEL (REFERENCE)

REFERENCE SHEET NO.
650-E01

170 ADM 350 I1 CONTINUED FROM DWG. E01

ADDRESS	ROW	TERMINAL
	2	18
	3	18
0x00016	2	1
0x00015	2	2
0x00014	2	3
0x00013	2	4
0x00012	2	5
0x00011	2	6
0x00010	2	7
0x00009	2	8
0x00008	2	9
0x00007	2	10
0x00006	2	11
0x00005	2	12
0x00004	2	13
1x00003	2	14
1x00002	2	15
1x00001	2	16

MODULE 1
DIGITAL OUTPUTS

PLC-1L1/FU5 — FU5 AGC 4A — +24 VDC

PLC-2L+/FU6 — FU6 AGC 4A — +24 VDC

PLC-0-001/CR-B1 — CR-B1 (14/13) — B1 — E4N

PLC-0-002/CR-B2 — CR-B2 (14/13)

PLC-0-003/CR-B3 — CR-B3 (14/13)

PLC-0-004/CR-B4 — CR-B4 (14/13)

PLC-0-005/CR-B5 — CR-B5 (14/13)

PLC-0-006/CR-B6 — CR-B6 (14/13)

PLC-0-007/CR-B7 — CR-B7 (14/13)

PLC-0-008/CR-B8 — CR-B8 (14/13)

PLC-0-009/CR-B9 — CR-B9 (14/13)

PLC-0-010/CR-B10 — CR-B10 (14/13)

PLC-0-011/CR-B11 — CR-B11 (14/13)

PLC-0-012/CR-B12 — CR-B12 (14/13)

PLC-0-013/CR-B13 — CR-B13 (14/13)

PLC-0-014/CR-B14 — CR-B14 (14/13)

PLC-0-015/CR-B15 — CR-B15 (14/13)

PLC-0-016/CR-B16 — CR-B16 (14/13)

CBA3 — B2 — 120 VAC FROM CBA3

B3 — NEU

CR-B1	CR-B1/B4	B4	B5	SPARE
CR-B2	CR-B2/B6	B6	B7	SPARE
CR-B3	CR-B3/B8	B8	B9	SPARE
CR-B4	CR-B4/B10	B10	B11	SPARE
CR-B5	CR-B5/B12	B12	B13	SPARE
CR-B6	CR-B6/B14	B14	B15	SPARE
CR-B7	CR-B7/B16	B16	B17	SPARE
CR-B8	CR-B8/B18	B18	B19	SPARE
CR-B9	CR-B9/B20	B20	B21	SPARE
CR-B10	CR-B10/B22	B22	B23	SPARE
CR-B11	CR-B11/B24	B24	B25	SPARE
CR-B12	CR-B12/B26	B26	B27	SPARE
CR-B13	CR-B13/B28	B28	B29	SPARE
CR-B14	CR-B14/B30	B30	B31	SPARE
CR-B15	CR-B15/B32	B32	B33	SPARE
CR-B16	CR-B16/B34	B34	B35	SPARE

EXISTING

Know what's below. Call 811 before you dig.

DATE	NO.	REVISION	BY
X/X/X	0	BID SET	

APPROVED BY:

Rob English, PE

DATE: 3/3/2026

Ben Mahony — DESIGNED BY — 2/26/2026 DATE

Ben Mahony — DRAWN BY — 2/26/2026 DATE

I-Wen Yang, PE — REVIEWED BY — 2/26/2026 DATE

CITY OF KIRKLAND WASHINGTON

CITY OF KIRKLAND
DEPARTMENT OF PUBLIC WORKS
123 FIFTH AVENUE KIRKLAND, WA 98033
(425) 587-3800 www.kirklandwa.gov

650 ZONE PUMP STATION RTU L, I/O WIRING DIAGRAM (2)

SCADA REPLACEMENT

SOUTH RESERVOIR EXISTING CONTROL PANEL (REFERENCE)

REFERENCE SHEET NO. 650-E02

INSTALLATION NOTES

1. NEW TELEMETRY PANEL WILL BE TEMPORARILY SET IN LIFT STATION AND FULLY TESTED THROUGH NEW COMMUNICATION NETWORK BEFOR EXISTING TELIMETRY PANEL IS REMOVED FROM SERVICE.

2. NEW TELEMETRY PANEL WILL MOUNT IN SAME LOCATION AS EXISTING EQUIPMENT AND NEW UPS PANEL WILL MOUNT UNDERNEATH.

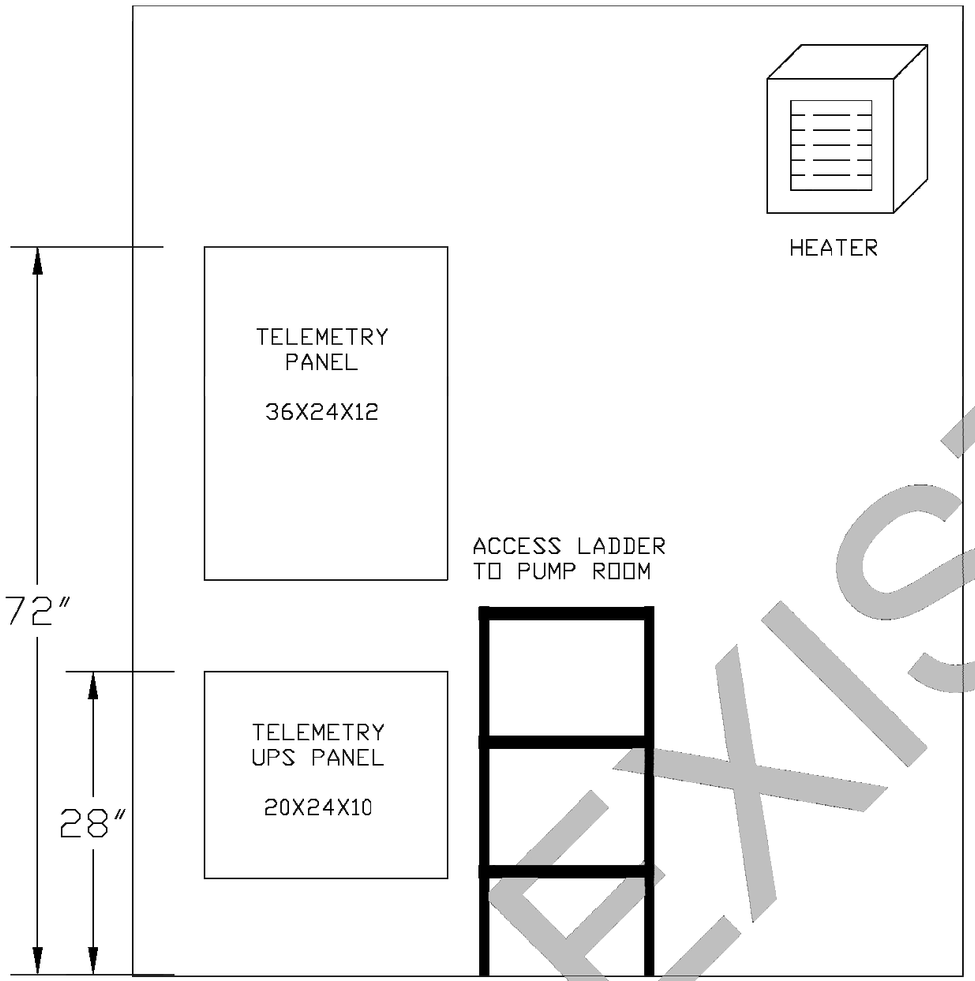

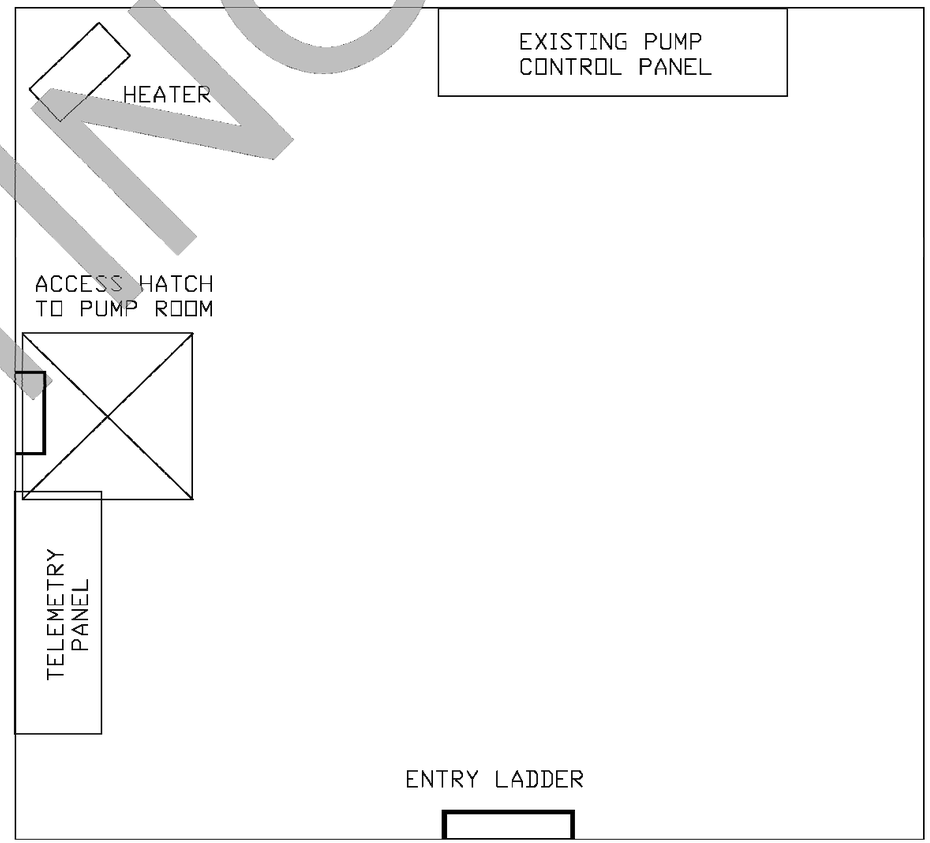

EXISTING

Know what's below. Call 811 before you dig.

DATE	NO.	REVISION	BY
X/X/X	0	BID SET	

APPROVED BY:

Rob English, PE

DATE: 3/3/2026

Ben Mahony (DESIGNED BY)	2/26/2026 (DATE)	
Ben Mahony (DRAWN BY)	2/26/2026 (DATE)	
I-Wen Yang, PE (REVIEWED BY)	2/26/2026 (DATE)	

CITY OF KIRKLAND

DEPARTMENT OF PUBLIC WORKS
123 FIFTH AVENUE KIRKLAND, WA 98033
(425) 587-3800 www.kirklandwa.gov

ROSE POINT LIFT STATION RTU B, ROOM LAYOUT DRAWING

SCADA REPLACEMENT

SOUTH RESERVOIR EXISTING CONTROL PANEL (REFERENCE)

REFERENCE SHEET NO. ROSE-EL01

SHEET 44 of 366

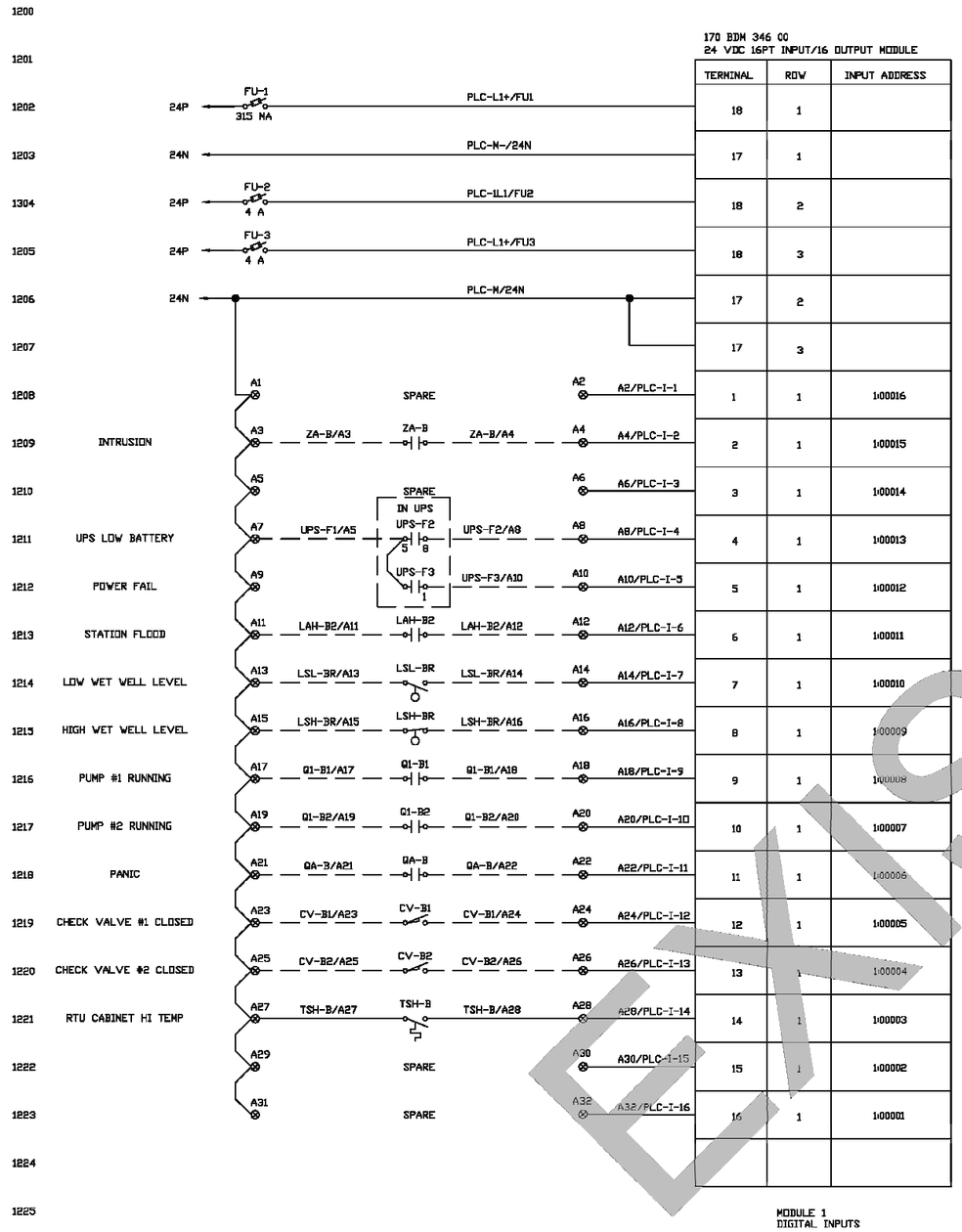

1700 BDM 346 CC
24 VDC 16PT INPUT/16 OUTPUT MODULE

TERMINAL	ROW	INPUT ADDRESS
18	1	
17	1	
18	2	
18	3	
17	2	
17	3	
1	1	1:00016
2	1	1:00015
3	1	1:00014
4	1	1:00013
5	1	1:00012
6	1	1:00011
7	1	1:00010
8	1	1:00009
9	1	1:00008
10	1	1:00007
11	1	1:00006
12	1	1:00005
13	1	1:00004
14	1	1:00003
15	1	1:00002
16	1	1:00001

MODULE 1
DIGITAL INPUTS

EXISTING

Know what's below. Call 811 before you dig.

DATE	NO.	REVISION	BY
X/X/X	0	BID SET	

APPROVED BY:

Rob English, PE

DATE: 3/3/2026

Ben Mahony 2/26/2026
DESIGNED BY DATE

Ben Mahony 2/26/2026
DRAWN BY DATE

I-Wen Yang, PE 2/26/2026
REVIEWED BY DATE

CITY OF KIRKLAND WASHINGTON

CITY OF KIRKLAND
DEPARTMENT OF PUBLIC WORKS
123 FIFTH AVENUE KIRKLAND, WA 98033
(425) 587-3800 www.kirklandwa.gov

ROSE POINT LIFT STATION RTU B, I/O WIRING DIAGRAM (1)

SCADA REPLACEMENT

SOUTH RESERVOIR EXISTING CONTROL PANEL (REFERENCE)

REFERENCE SHEET NO.
ROSE-E01

SHEET 45 of 366

170 ADM 350 15

ADDRESS	ROW	TERMINAL		
	2	18	PLC-1L1/FU2	FU2 AGC 4A → +24 VDC
	3	19	PLC-2L+/FU3	FU3 AGC 4A → +24 VDC
0:00016	2	1	PLC-O-001/CR-B1	CR-B1 14/13 → B2 → 0VDC
0:00015	2	2	PLC-O-002/CR-B2	CR-B2 14/13
0:00014	2	3	PLC-O-003/CR-B3	CR-B3 14/13
0:00013	2	4	PLC-O-004/CR-B4	CR-B4 14/13
0:00012	2	5	PLC-O-005/CR-B5	CR-B5 14/13
0:00011	2	6	PLC-O-006/CR-B6	CR-B6 14/13
0:00010	2	7	PLC-O-007/CR-B7	CR-B7 14/13
0:00009	2	8	PLC-O-008/CR-B8	CR-B8 14/13
0:00008	2	9	PLC-O-009/CR-B9	CR-B9 14/13
0:00007	2	10	PLC-O-010/CR-B10	CR-B10 14/13
0:00006	2	11	PLC-O-011/CR-B11	CR-B11 14/13
0:00005	2	12	PLC-O-012/CR-B12	CR-B12 14/13
0:00004	2	13	PLC-O-013/CR-B13	CR-B13 14/13
0:00003	2	14	PLC-O-014/CR-B14	CR-B14 14/13
0:00002	2	15	PLC-O-015/CR-B15	CR-B15 14/13
0:00001	2	16	PLC-O-016/CR-B16	CR-B16 14/13

MODULE 1
DIGITAL OUTPUTS

CBA3 → B2 120 VAC FROM CBA3

B3 → NEU

CR-B1	CR-B1/B4	B4	B5 SPARE
CR-B2	CR-B2/B6	B6	B7 SPARE
CR-B3	CR-B3/B8	B8	B9 SPARE
CR-B4	CR-B4/B10	B10	B11 SPARE
CR-B5	CR-B5/B12	B12	B13 SPARE
CR-B6	CR-B6/B14	B14	B15 SPARE
CR-B7	CR-B7/B16	B16	B17 SPARE
CR-B8	CR-B8/B18	B18	B19 SPARE
CR-B9	CR-B9/B20	B20	B21 SPARE
CR-B10	CR-B10/B22	B22	B23 SPARE
CR-B11	CR-B11/B24	B24	B25 SPARE
CR-B12	CR-B12/B26	B26	B27 SPARE
CR-B13	CR-B13/B28	B28	B29 SPARE
CR-B14	CR-B14/B30	B30	B31 SPARE
CR-B15	CR-B15/B32	B32	B33 SPARE
CR-B16	CR-B16/B34	B34	B35 SPARE

EXISTING

Know what's below. Call 811 before you dig.

DATE	NO.	REVISION	BY
X/X/X	0	BID SET	

APPROVED BY:

Rob English, PE

DATE: 3/3/2026

Ben Mahony DESIGNED BY 2/26/2026 DATE

Ben Mahony DRAWN BY 2/26/2026 DATE

I-Wen Yang, PE REVIEWED BY 2/26/2026 DATE

CITY OF KIRKLAND WASHINGTON

CITY OF KIRKLAND
DEPARTMENT OF PUBLIC WORKS
123 FIFTH AVENUE KIRKLAND, WA 98033
(425) 587-3800 www.kirklandwa.gov

ROSE POINT LIFT STATION RTU B, I/O WIRING DIAGRAM (2)
SCADA REPLACEMENT
SOUTH RESERVOIR EXISTING CONTROL PANEL (REFERENCE)

REFERENCE SHEET NO.
ROSE-E02

SHEET 47 of 366

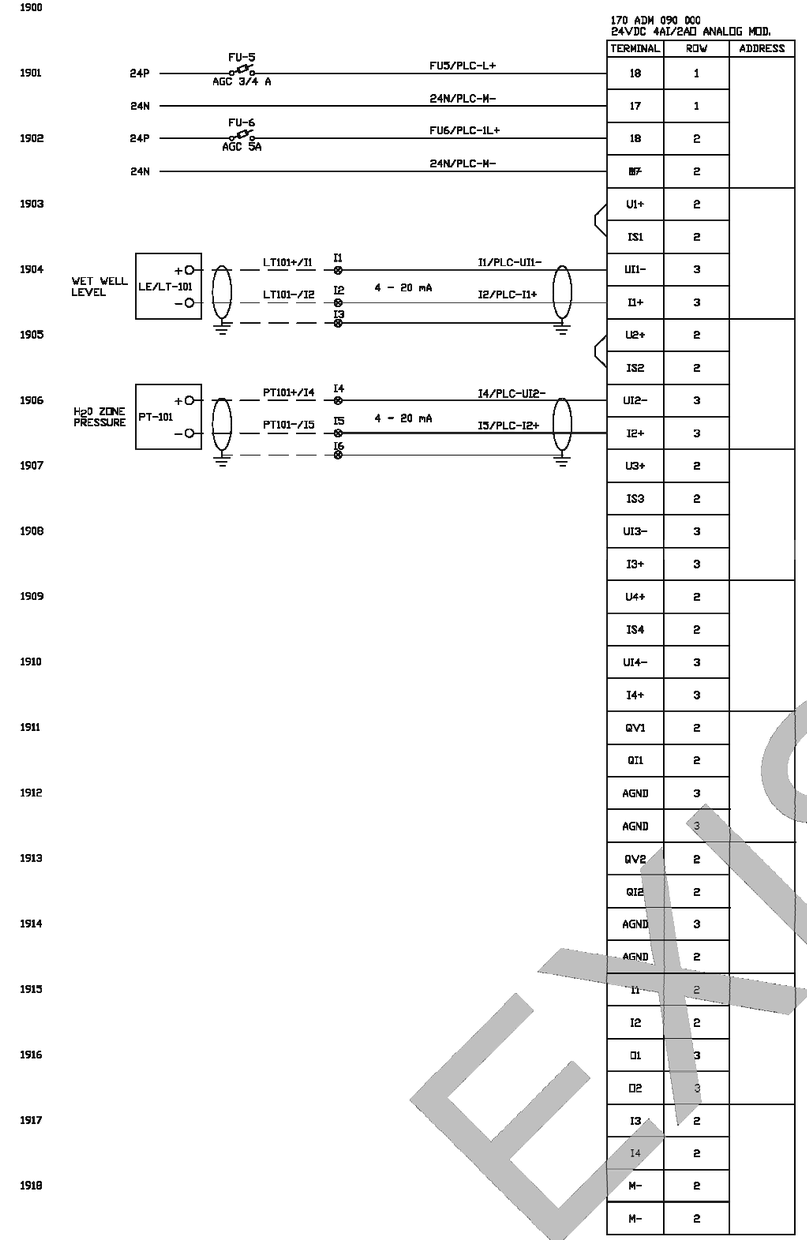

EXISTING

DATE	NO.	REVISION	BY
X/X/X	0	BID SET	

APPROVED BY:

Rob English, PE

DATE: 3/3/2026

Ben Mahony — DESIGNED BY — 2/26/2026 DATE

Ben Mahony — DRAWN BY — 2/26/2026 DATE

I-Wen Yang, PE — REVIEWED BY — 2/26/2026 DATE

CITY OF KIRKLAND
DEPARTMENT OF PUBLIC WORKS
123 FIFTH AVENUE KIRKLAND, WA 98033
(425) 587-3800 www.kirklandwa.gov

ROSE POINT LIFT STATION RTU B, I/O WIRING DIAGRAM (3)

SCADA REPLACEMENT

SOUTH RESERVOIR EXISTING CONTROL PANEL (REFERENCE)

REFERENCE SHEET NO.
ROSE-E03

SHEET 48 of 366

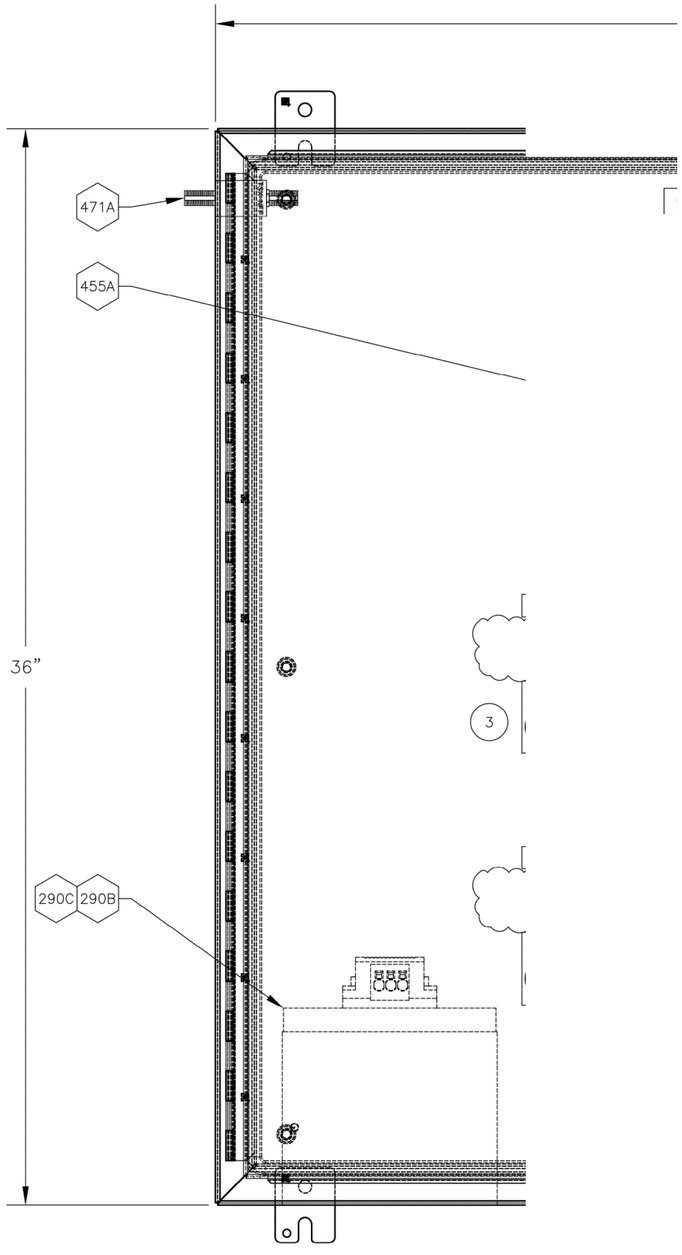

NOTES:
1. REPLACE EXISTING OIT WITH NEW MAPLE SYSTEMS OIT
2. REMOVE AND COVER PUMP START METERS
3. REPLACE SWITCHES WITH NEW ALLEN BRADLEY 30MM 3-POSITION SWITCHES

811 Know what's below. Call 811 before you dig.

DATE	NO.	REVISION	BY
X/X/X	0	BID SET	

APPROVED BY:

Rob English, PE

DATE: 3/3/2026

Ben Mahony — DESIGNED BY — 2/26/2026 DATE
Ben Mahony — DRAWN BY — 2/26/2026 DATE
I-Wen Yang, PE — REVIEWED BY — 2/26/2026 DATE

CITY OF KIRKLAND
DEPARTMENT OF PUBLIC WORKS
123 FIFTH AVENUE KIRKLAND, WA 98033
(425) 587-3800 www.kirklandwa.gov

LAYOUT - PANEL - FRONT ELEVATION
SCADA REPLACEMENT
SOUTH RESERVOIR CONTROL PANEL (SR)

REFERENCE SHEET NO.
SR-10.00

SHEET 49 of 366

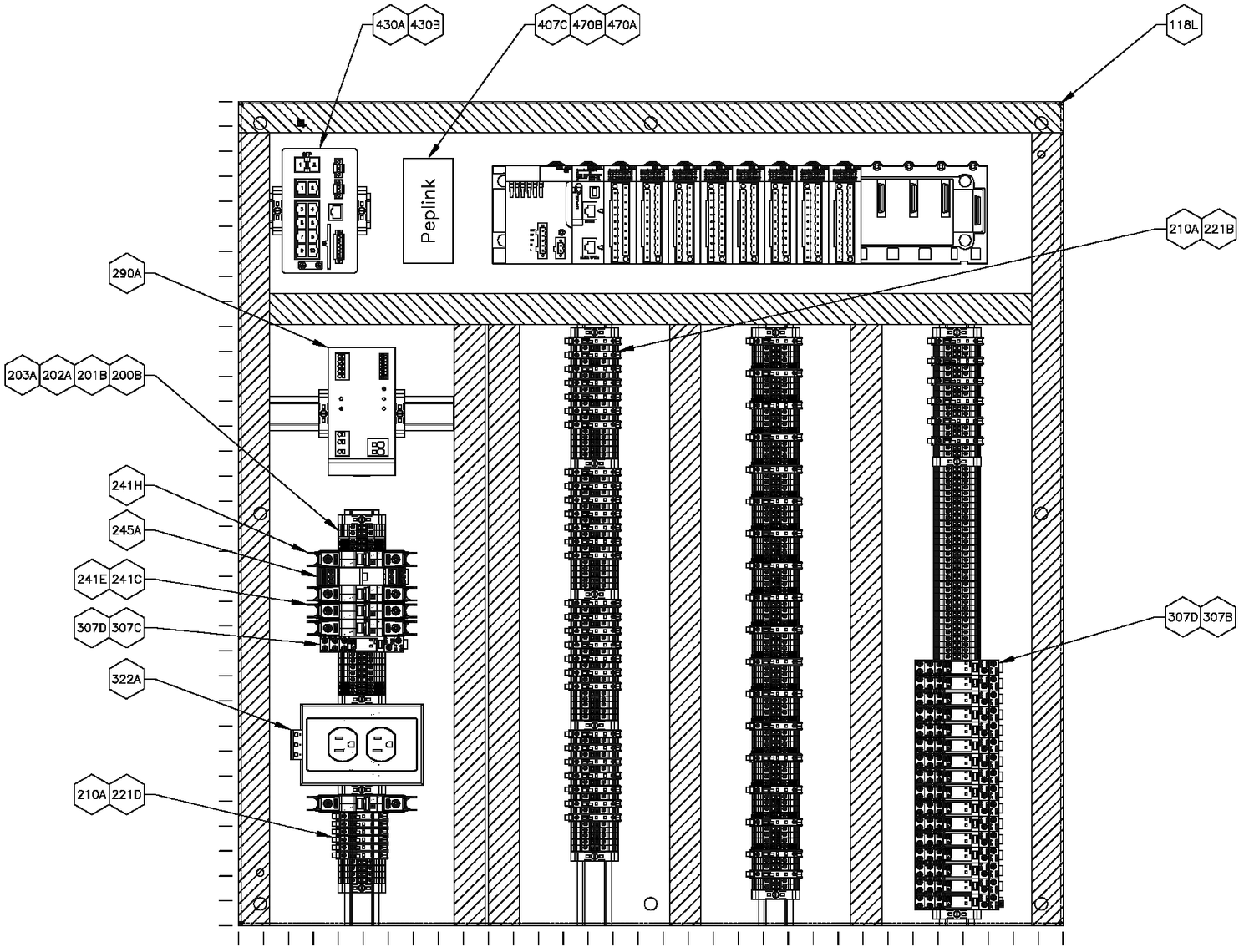

BACKPAN

NOTES:
1. BACKPANEL ASSEMBLY TO BE INSTALLED IN EXISTING ENCLOSURE

XXX BOM ITEM NUMBER

Know what's below. Call 811 before you dig.

DATE	NO.	REVISION	BY
X/X/X	0	BID SET	

APPROVED BY:

Rob English, PE

DATE: 3/3/2026

Ben Mahony 2/26/2026
DESIGNED BY DATE

Ben Mahony 2/26/2026
DRAWN BY DATE

I-Wen Yang, PE 2/26/2026
REVIEWED BY DATE

CITY OF KIRKLAND WASHINGTON

CITY OF KIRKLAND
DEPARTMENT OF PUBLIC WORKS
123 FIFTH AVENUE KIRKLAND, WA 98033
(425) 587-3800 www.kirklandwa.gov

LAYOUT - PANEL - BACKPAN ELEVATION
SCADA REPLACEMENT
SOUTH RESERVOIR CONTROL PANEL (SR)

REFERENCE SHEET NO.
SR-10.05

SHEET 50 of 366

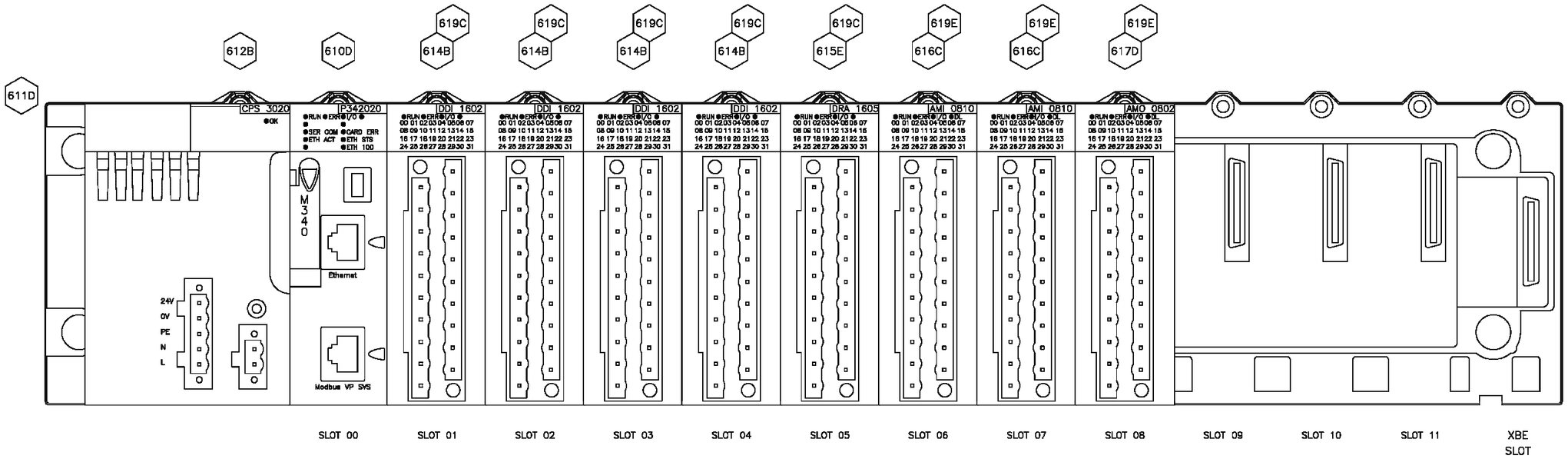

RACK 1

XXX BOM ITEM NUMBER

Know what's below. Call 811 before you dig.

DATE	NO.	REVISION	BY
X/X/X	0	BID SET	

APPROVED BY:

Rob English, PE

DATE: 3/3/2026

Ben Mahony 2/26/2026
DESIGNED BY DATE

Ben Mahony 2/26/2026
DRAWN BY DATE

I-Wen Yang, PE 2/26/2026
REVIEWED BY DATE

CITY OF KIRKLAND WASHINGTON

CITY OF KIRKLAND
DEPARTMENT OF PUBLIC WORKS
123 FIFTH AVENUE KIRKLAND, WA 98033
(425) 587-3800 www.kirklandwa.gov

LAYOUT - PANEL - PLC RACK 1

SCADA REPLACEMENT

SOUTH RESERVOIR CONTROL PANEL (SR)

REFERENCE SHEET NO.
SR-10.07

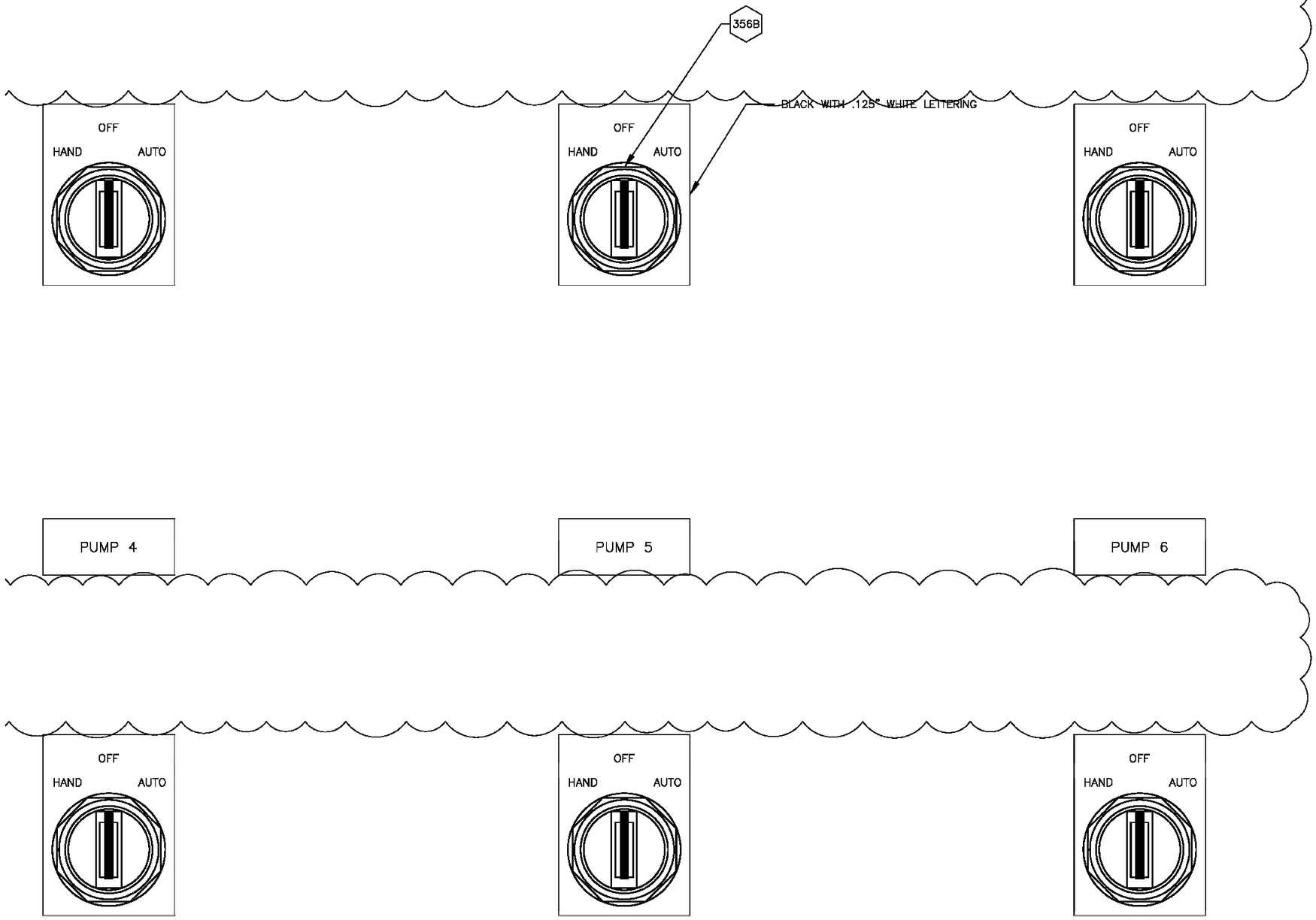

XXX BOM ITEM NUMBER

Know what's below. Call 811 before you dig.

DATE	NO.	REVISION	BY
X/X/X	0	BID SET	

APPROVED BY:

Rob English, PE

DATE: 3/3/2026

Ben Mahony — DESIGNED BY — 2/26/2026 DATE

Ben Mahony — DRAWN BY — 2/26/2026 DATE

I-Wen Yang, PE — REVIEWED BY — 2/26/2026 DATE

CITY OF KIRKLAND WASHINGTON

CITY OF KIRKLAND
DEPARTMENT OF PUBLIC WORKS
123 FIFTH AVENUE KIRKLAND, WA 98033
(425) 587-3800 www.kirklandwa.gov

LAYOUT - PANEL - CONTROLS DETAILS

SCADA REPLACEMENT

SOUTH RESERVOIR CONTROL PANEL (SR)

REFERENCE SHEET NO. SR-10.10

XXX BOM ITEM NUMBER

Know what's below. Call 811 before you dig.

DATE	NO.	REVISION	BY
X/X/X	0	BID SET	

APPROVED BY:

Rob English, PE

DATE: 3/3/2026

Ben Mahony DESIGNED BY 2/26/2026 DATE

Ben Mahony DRAWN BY 2/26/2026 DATE

I-Wen Yang, PE REVIEWED BY 2/26/2026 DATE

CITY OF KIRKLAND WASHINGTON

CITY OF KIRKLAND
DEPARTMENT OF PUBLIC WORKS
123 FIFTH AVENUE KIRKLAND, WA 98033
(425) 587-3800 www.kirklandwa.gov

LAYOUT - PANEL - NAMEPLATE DETAIL

SCADA REPLACEMENT

SOUTH RESERVOIR CONTROL PANEL (SR)

REFERENCE SHEET NO.
SR-10.20

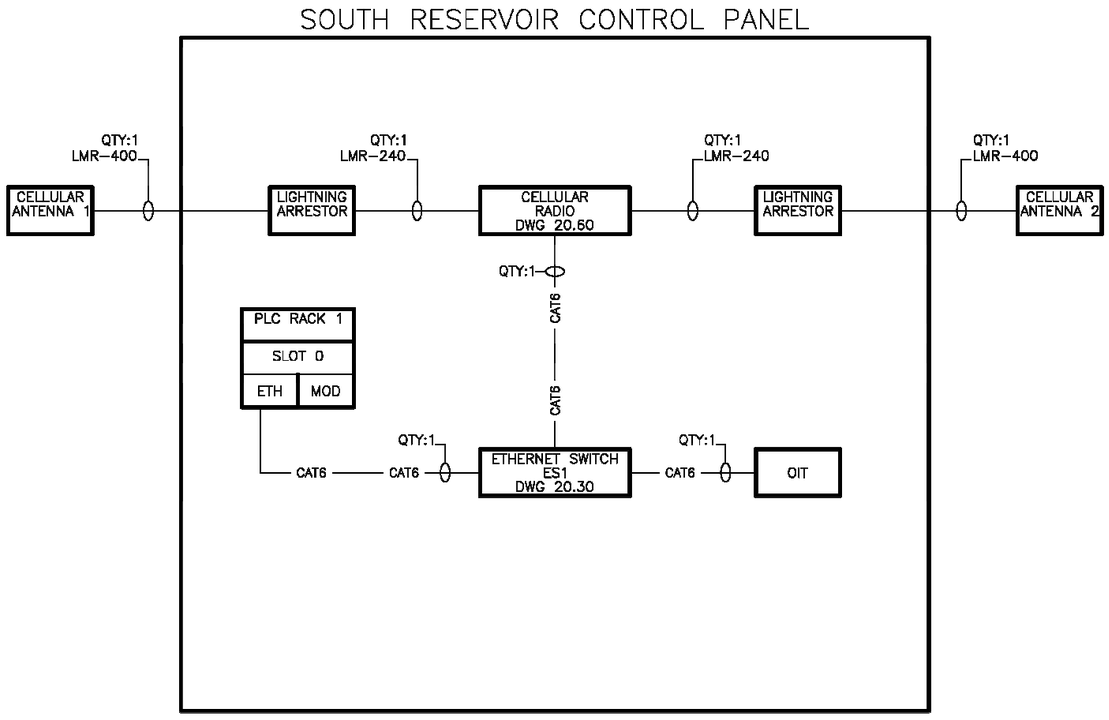

Know what's below. Call 811 before you dig.

DATE	NO.	REVISION	BY
X/X/X	0	BID SET	

APPROVED BY:

Rob English, PE

DATE: 3/3/2026

Ben Mahony — DESIGNED BY — 2/26/2026 DATE

Ben Mahony — DRAWN BY — 2/26/2026 DATE

I-Wen Yang, PE — REVIEWED BY — 2/26/2026 DATE

CITY OF KIRKLAND WASHINGTON

CITY OF KIRKLAND

DEPARTMENT OF PUBLIC WORKS
123 FIFTH AVENUE KIRKLAND, WA 98033
(425) 587-3800 www.kirklandwa.gov

NETWORK OVERVIEW DIAGRAM

SCADA REPLACEMENT

SOUTH RESERVOIR CONTROL PANEL (SR)

REFERENCE SHEET NO.
SR-20.00

SHEET 54 of 366

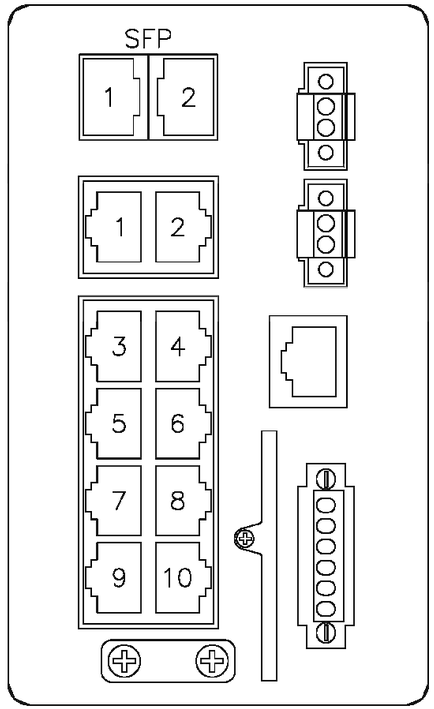

NETWORK SWITCH NS-1					
				DESTINATION DEVICE	
PORT#	CABLE TYPE	NETWORK DESCRIPTION	CABLE LABEL	DESCRIPTION	PORT #
1	CAT6	PROGRAMMABLE LOGIC CONTROLLER	PLC	PROGRAMMABLE LOGIC CONTROLLER	1
2	CAT6	OPERATIONAL INTERFACE TERMINAL	OIT	OPERATIONAL INTERFACE TERMINAL	1
3	CAT6	CELLULAR RADIO	RADIO	CELLULAR RADIO	ETHERNET
4					
5					
6					
7					
8					
COMBO 1					
COMBO 2					

811 Know what's below. Call 811 before you dig.

DATE	NO.	REVISION	BY
X/X/X	0	BID SET	

APPROVED BY:

Rob English, PE

DATE: 3/3/2026

Ben Mahony — DESIGNED BY — 2/26/2026 DATE

Ben Mahony — DRAWN BY — 2/26/2026 DATE

I-Wen Yang, PE — REVIEWED BY — 2/26/2026 DATE

CITY OF KIRKLAND WASHINGTON

CITY OF KIRKLAND
DEPARTMENT OF PUBLIC WORKS
123 FIFTH AVENUE KIRKLAND, WA 98033
(425) 587-3800 www.kirklandwa.gov

NETWORK SWITCH (NS-1), PORT SCHEDULE

SCADA REPLACEMENT

SOUTH RESERVOIR CONTROL PANEL (SR)

REFERENCE SHEET NO.
SR-23.00

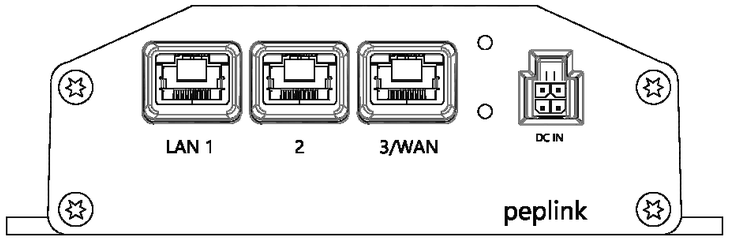

CELLULAR MODEM
CM1

				DESTINATION DEVICE	
PORT#	CABLE TYPE	NETWORK DESCRIPTION	CABLE LABEL	DESCRIPTION	PORT #
LAN 1	CAT6	CELLULAR RADIO	RADIO	ETHERNET SWITCH	3
LAN 2					
LAN 3/ WAN					
MAIN	LMR-240	CELLULAR ANTENNA 1	CELL-1	LIGHTNING ARRESTOR 1	N/A
AUX	LMR-240	CELLULAR ANTENNA 1	CELL-2	LIGHTNING ARRESTOR 2	N/A

811 Know what's below. Call 811 before you dig.

DATE	NO.	REVISION	BY
X/X/X	0	BID SET	

APPROVED BY:

Rob English, PE

DATE: 3/3/2026

Ben Mahony 2/26/2026
DESIGNED BY DATE

Ben Mahony 2/26/2026
DRAWN BY DATE

I-Wen Yang, PE 2/26/2026
REVIEWED BY DATE

CITY OF KIRKLAND
WASHINGTON

CITY OF KIRKLAND
DEPARTMENT OF PUBLIC WORKS
123 FIFTH AVENUE KIRKLAND, WA 98033
(425) 587-3800 www.kirklandwa.gov

COMM - CELLULAR MODEM (CM1), PORT SCHEDULE
SCADA REPLACEMENT
SOUTH RESERVOIR CONTROL PANEL (SR)

REFERENCE SHEET NO.
SR-26.00

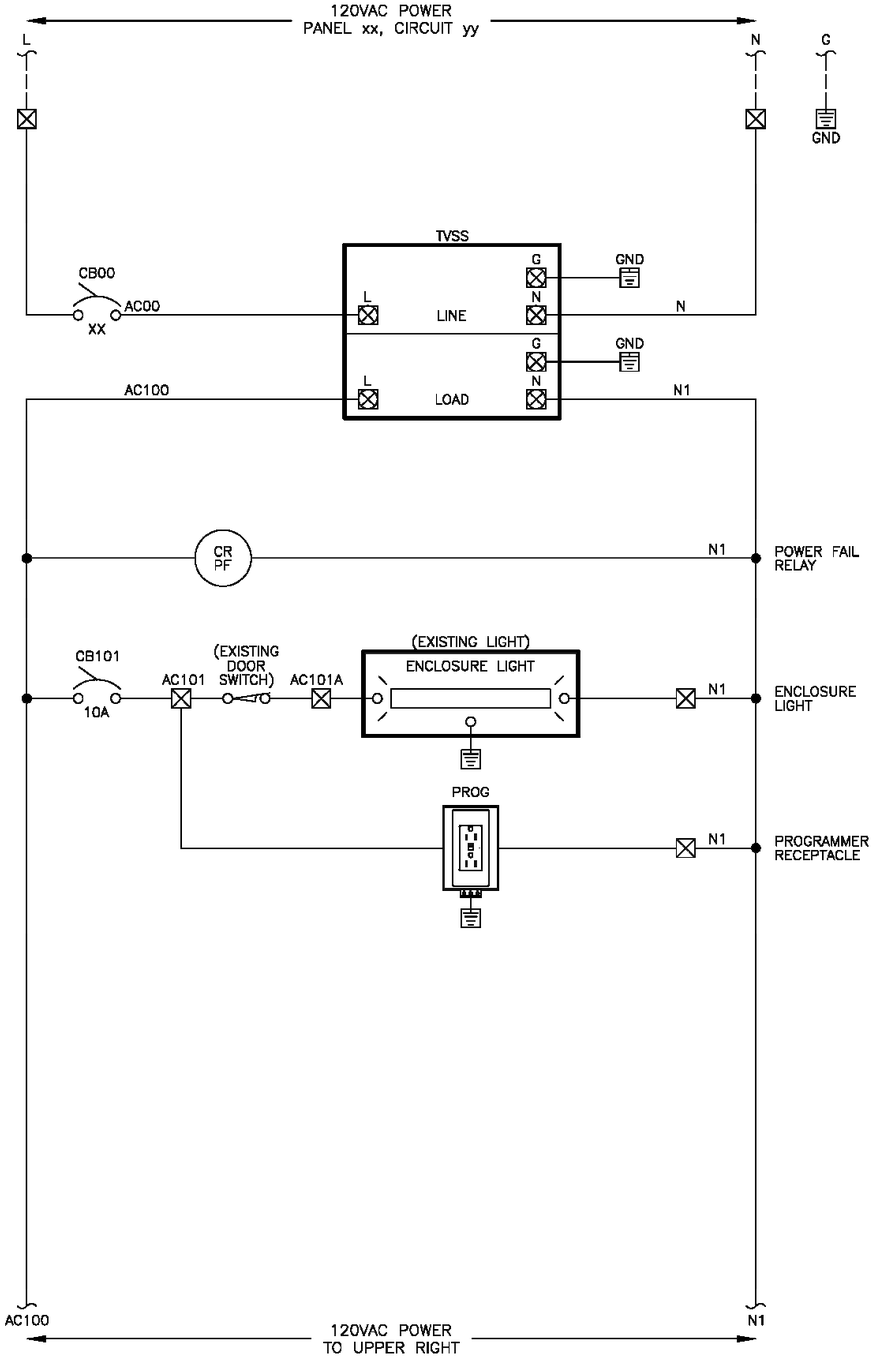

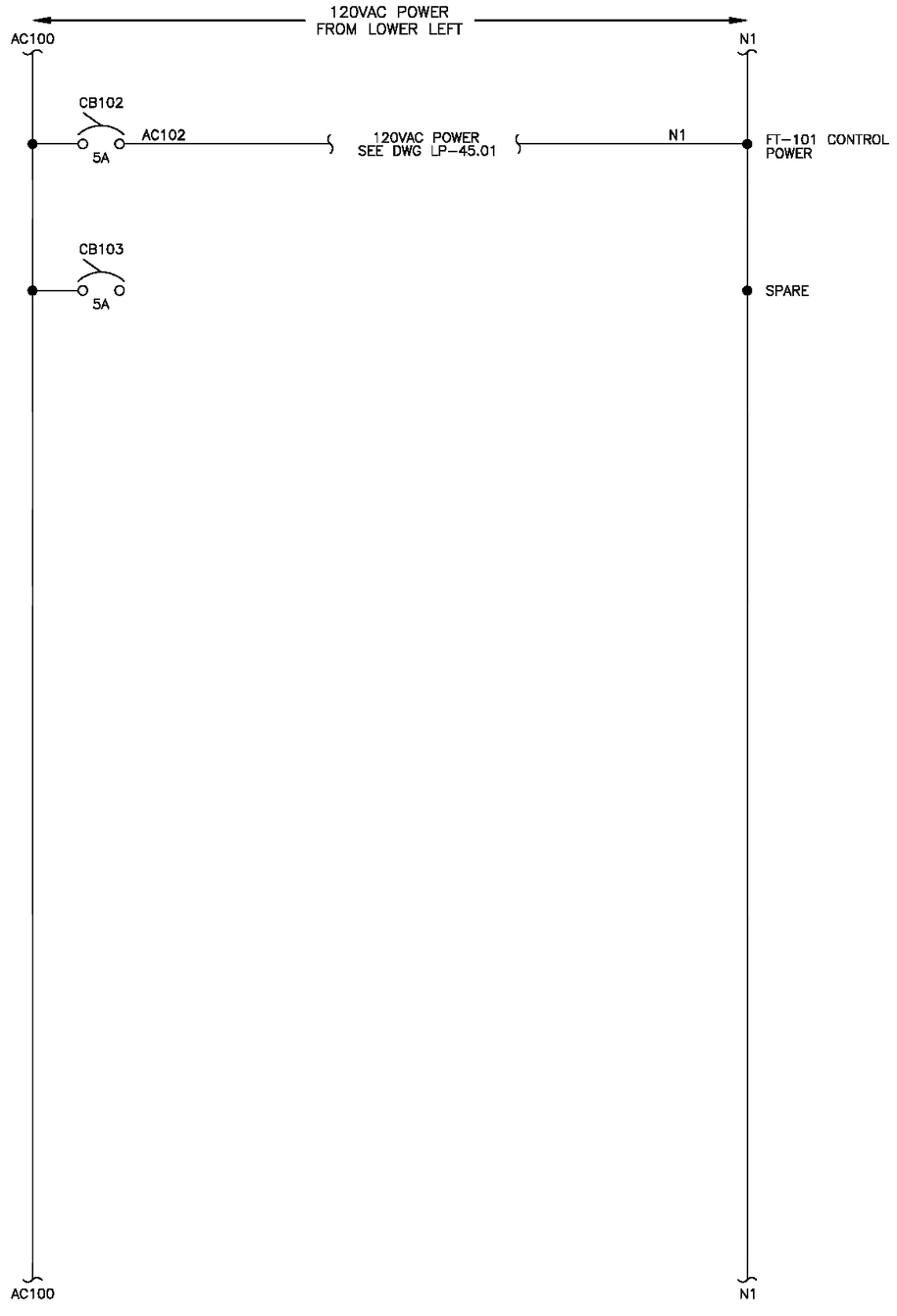

Know what's below. Call 811 before you dig.

DATE	NO.	REVISION	BY
X/X/X	0	BID SET	

APPROVED BY:

Rob English, PE

DATE: 3/3/2026

Ben Mahony — DESIGNED BY — 2/26/2026 DATE

Ben Mahony — DRAWN BY — 2/26/2026 DATE

I-Wen Yang, PE — REVIEWED BY — 2/26/2026 DATE

CITY OF KIRKLAND

DEPARTMENT OF PUBLIC WORKS
123 FIFTH AVENUE KIRKLAND, WA 98033
(425) 587-3800 www.kirklandwa.gov

120VAC POWER DISTRIBUTION DIAGRAM

SCADA REPLACEMENT

SOUTH RESERVOIR CONTROL PANEL (SR)

REFERENCE SHEET NO.
SR-31.00

SHEET
57
of
366

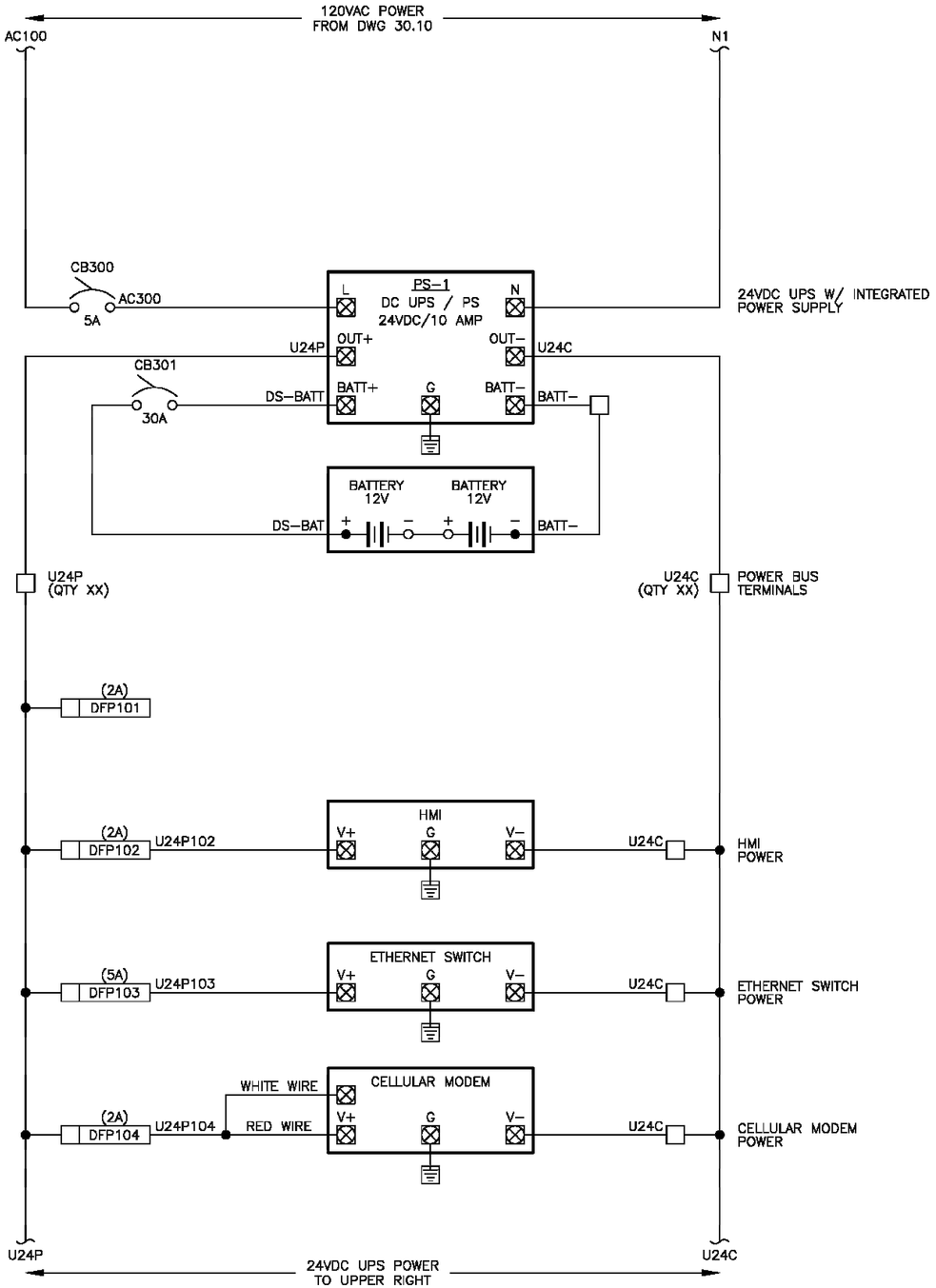

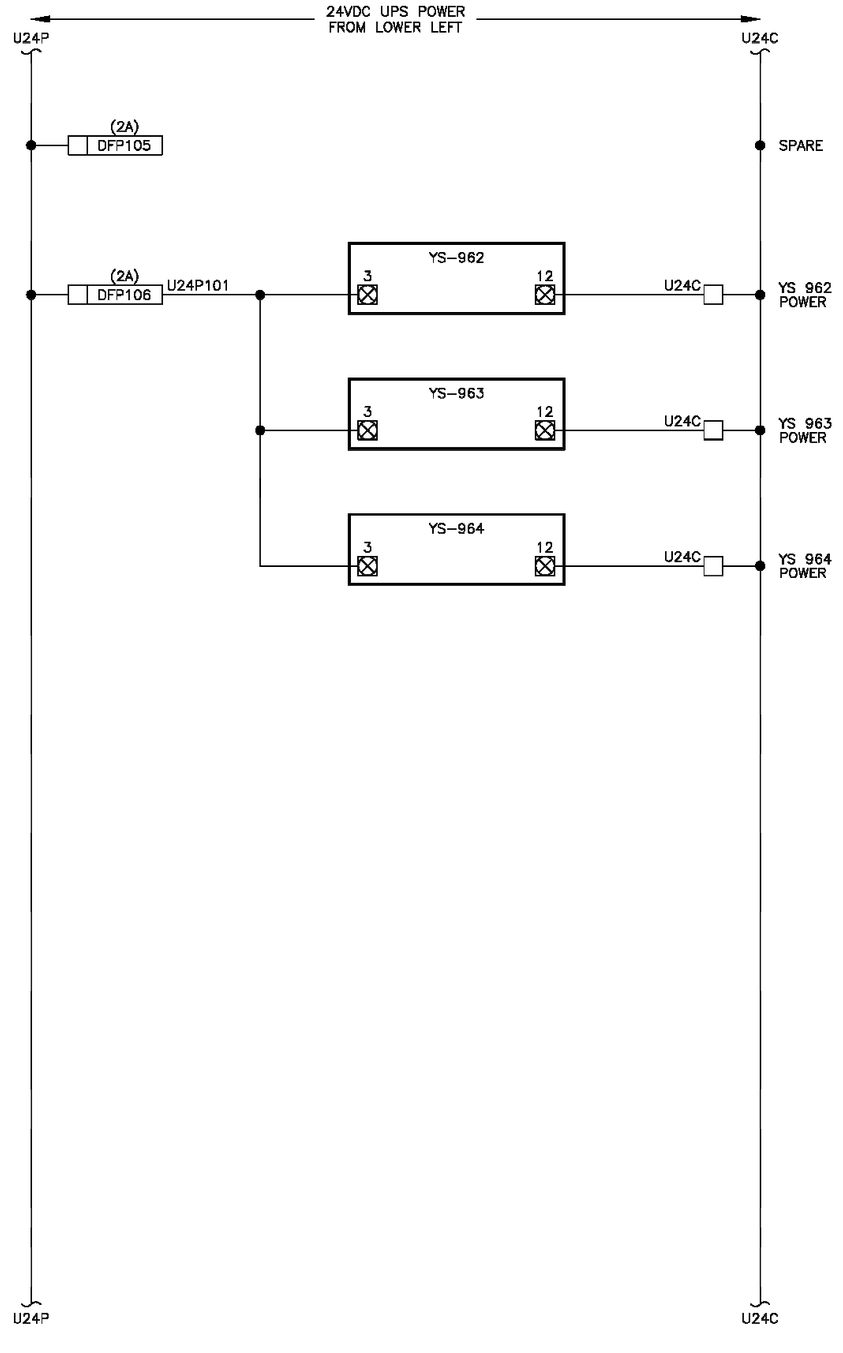

Know what's below. Call 811 before you dig.

DATE	NO.	REVISION	BY
X/X/X	0	BID SET	

APPROVED BY:

Rob English, PE

DATE: 3/3/2026

Ben Mahony (DESIGNED BY)	2/26/2026 (DATE)	
Ben Mahony (DRAWN BY)	2/26/2026 (DATE)	
I-Wen Yang, PE (REVIEWED BY)	2/26/2026 (DATE)	

CITY OF KIRKLAND WASHINGTON

CITY OF KIRKLAND
DEPARTMENT OF PUBLIC WORKS
123 FIFTH AVENUE KIRKLAND, WA 98033
(425) 587-3800 www.kirklandwa.gov

24VDC POWER DISTRIBUTION DIAGRAM
SCADA REPLACEMENT
SOUTH RESERVOIR CONTROL PANEL (SR)

REFERENCE SHEET NO.
SR-32.00

SHEET 58 of 366

SOUTH RESERVOIR RTU | FIELD | SOUTH RESERVOIR RTU

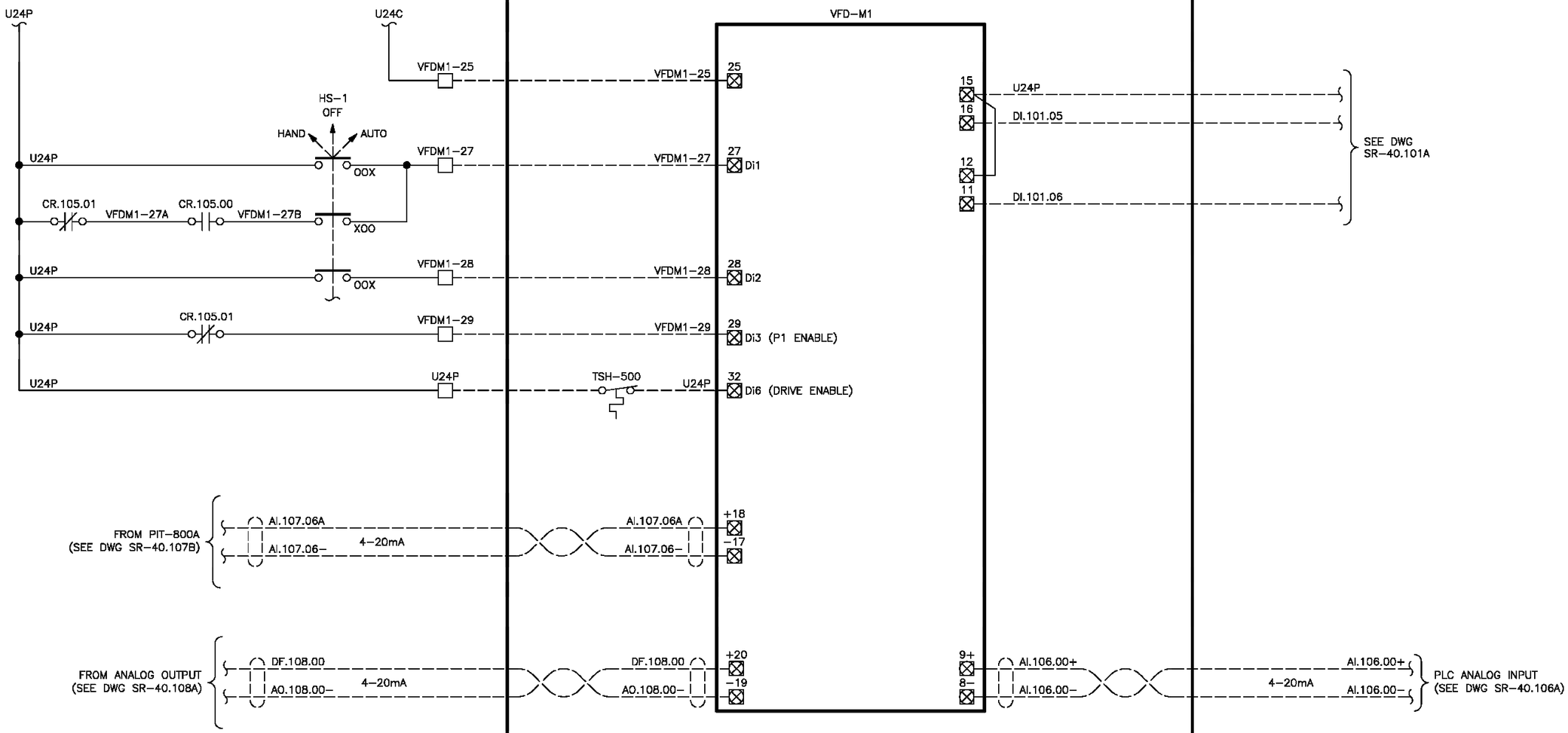

Know what's below. Call 811 before you dig.

DATE	NO.	REVISION	BY
X/X/X	0	BID SET	

APPROVED BY:

Rob English, PE

DATE: 3/3/2026

Ben Mahony — DESIGNED BY — 2/26/2026 DATE

Ben Mahony — DRAWN BY — 2/26/2026 DATE

I-Wen Yang, PE — REVIEWED BY — 2/26/2026 DATE

CITY OF KIRKLAND

DEPARTMENT OF PUBLIC WORKS
123 FIFTH AVENUE KIRKLAND, WA 98033
(425) 587-3800 www.kirklandwa.gov

VFD CONTROL WIRING DIAGRAM (1)
SCADA REPLACEMENT

SOUTH RESERVOIR CONTROL PANEL (SR)

REFERENCE SHEET NO.
SR-50.01

SHEET
59
of
366

SOUTH RESERVOIR RTU | FIELD | SOUTH RESERVOIR RTU

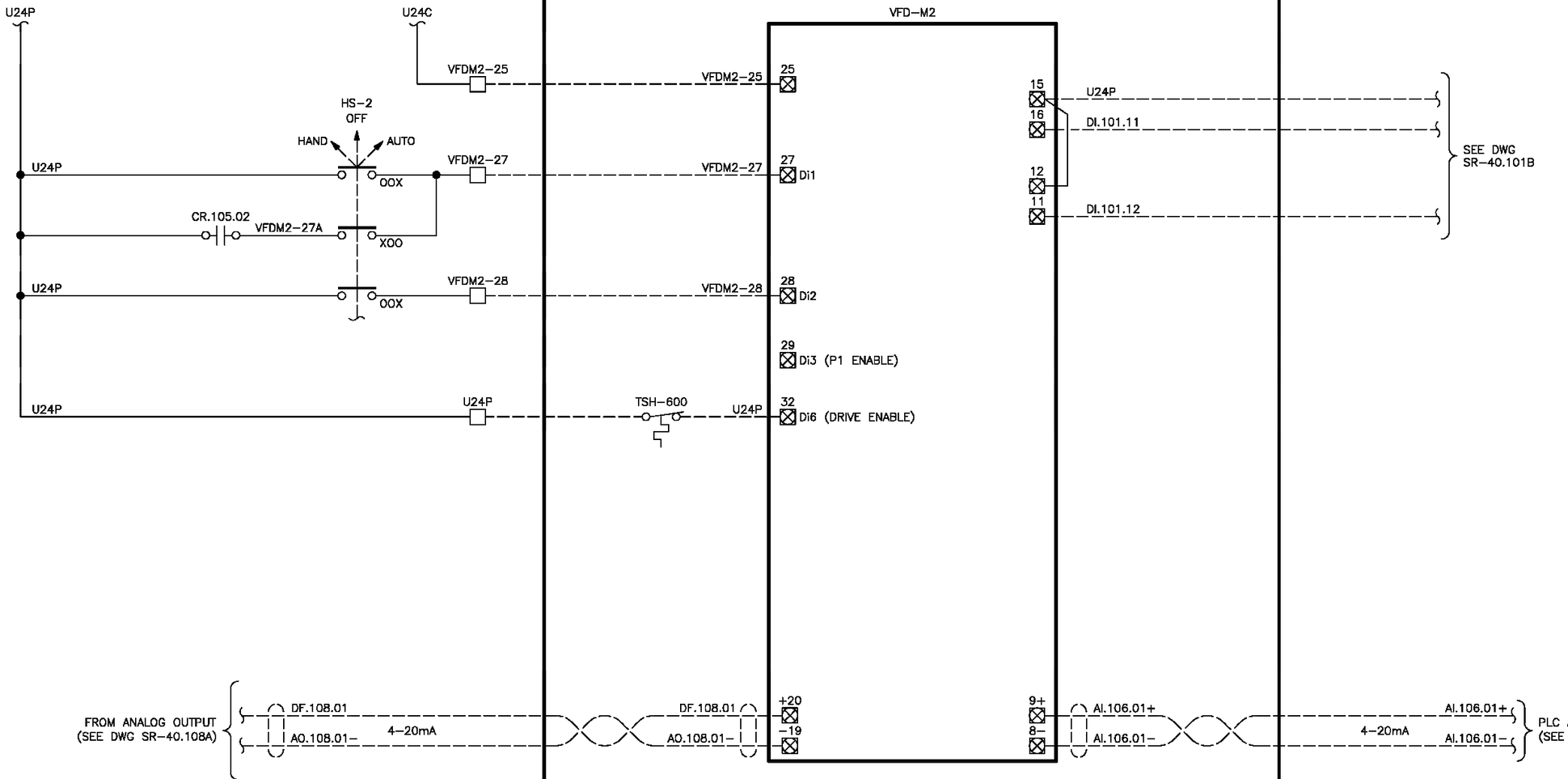

DATE	NO.	REVISION	BY
X/X/X	0	BID SET	

Know what's below. Call 811 before you dig.

APPROVED BY:

Rob English, PE

DATE: 3/3/2026

Ben Mahony	DESIGNED BY	2/26/2026 DATE
Ben Mahony	DRAWN BY	2/26/2026 DATE
I-Wen Yang, PE	REVIEWED BY	2/26/2026 DATE

CITY OF KIRKLAND

DEPARTMENT OF PUBLIC WORKS
123 FIFTH AVENUE KIRKLAND, WA 98033
(425) 587-3800 www.kirklandwa.gov

VFD CONTROL WIRING DIAGRAM (2)

SCADA REPLACEMENT

SOUTH RESERVOIR CONTROL PANEL (SR)

REFERENCE SHEET NO.
SR-50.02

SHEET 60 of 366

SOUTH RESERVOIR RTU | FIELD | SOUTH RESERVOIR RTU

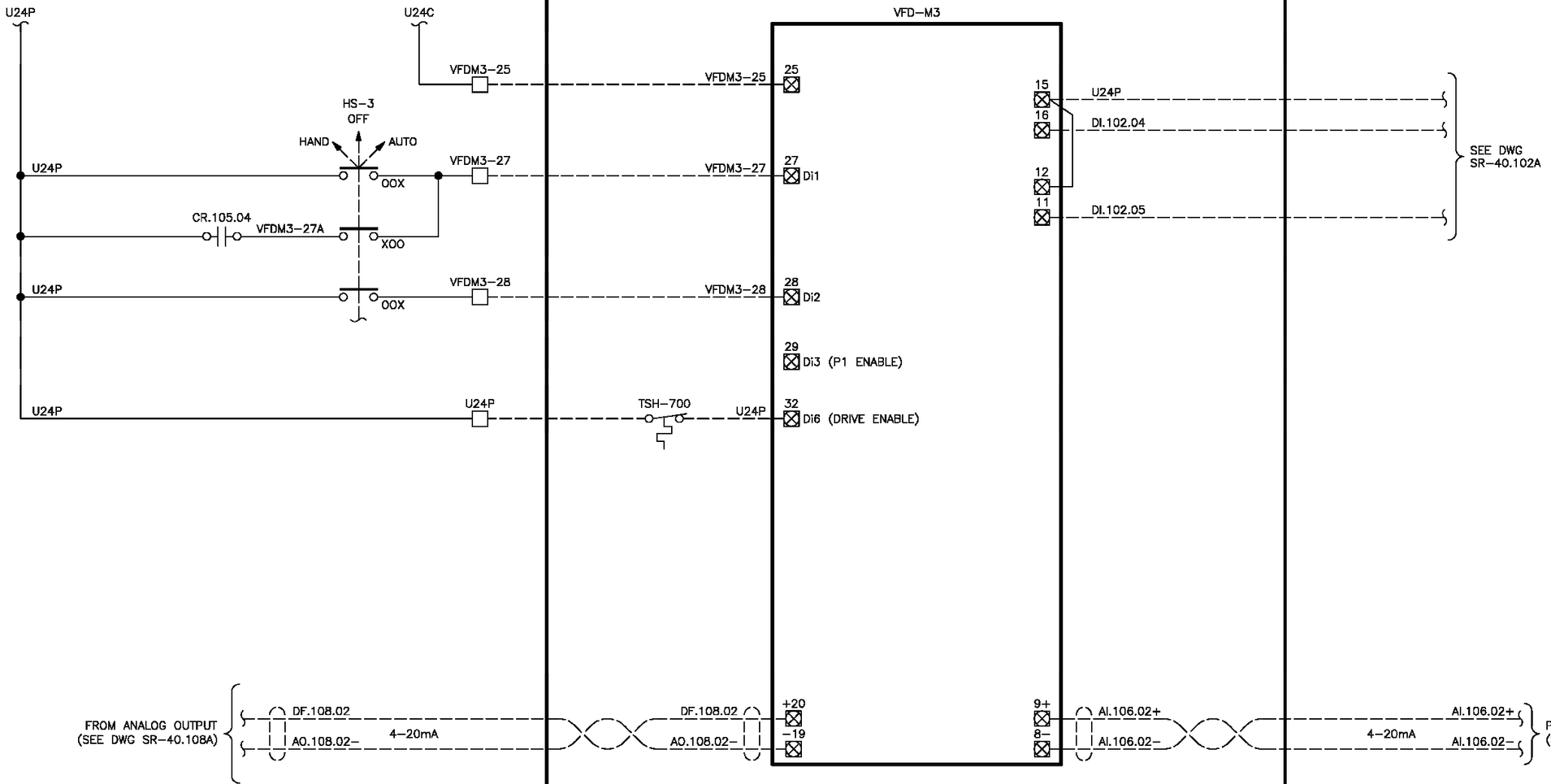

DATE	NO.	REVISION	BY
X/X/X	0	BID SET	

Know what's below. Call 811 before you dig.

APPROVED BY:

Rob English, PE

DATE: 3/3/2026

Ben Mahony — DESIGNED BY — 2/26/2026 DATE

Ben Mahony — DRAWN BY — 2/26/2026 DATE

I-Wen Yang, PE — REVIEWED BY — 2/26/2026 DATE

CITY OF KIRKLAND

DEPARTMENT OF PUBLIC WORKS
123 FIFTH AVENUE KIRKLAND, WA 98033
(425) 587-3800 www.kirklandwa.gov

VFD CONTROL WIRING DIAGRAM (3)

SCADA REPLACEMENT

SOUTH RESERVOIR CONTROL PANEL (SR)

REFERENCE SHEET NO.
SR-50.03

SHEET
61
of
366

SOUTH RESERVOIR RTU | FIELD | SOUTH RESERVOIR RTU

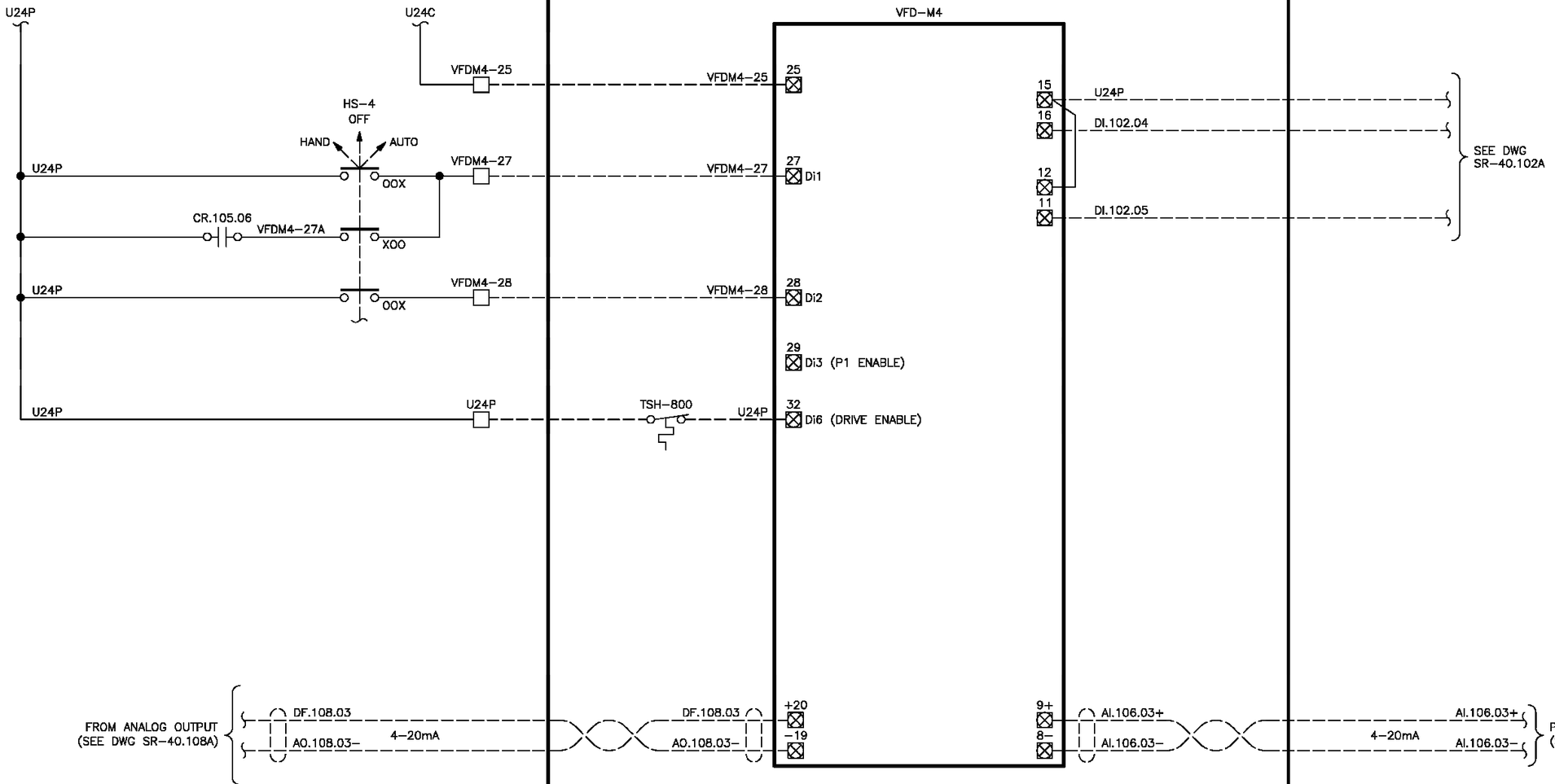

DATE	NO.	REVISION	BY
X/X/X	0	BID SET	

Know what's below. Call 811 before you dig.

APPROVED BY:

Rob English, PE

DATE: 3/3/2026

Ben Mahony	DESIGNED BY	2/26/2026 DATE
Ben Mahony	DRAWN BY	2/26/2026 DATE
I-Wen Yang, PE	REVIEWED BY	2/26/2026 DATE

CITY OF KIRKLAND

DEPARTMENT OF PUBLIC WORKS
123 FIFTH AVENUE KIRKLAND, WA 98033
(425) 587-3800 www.kirklandwa.gov

VFD CONTROL WIRING DIAGRAM (4)
SCADA REPLACEMENT

SOUTH RESERVOIR CONTROL PANEL (SR)

REFERENCE SHEET NO.
SR-50.04

SHEET 62 of 366

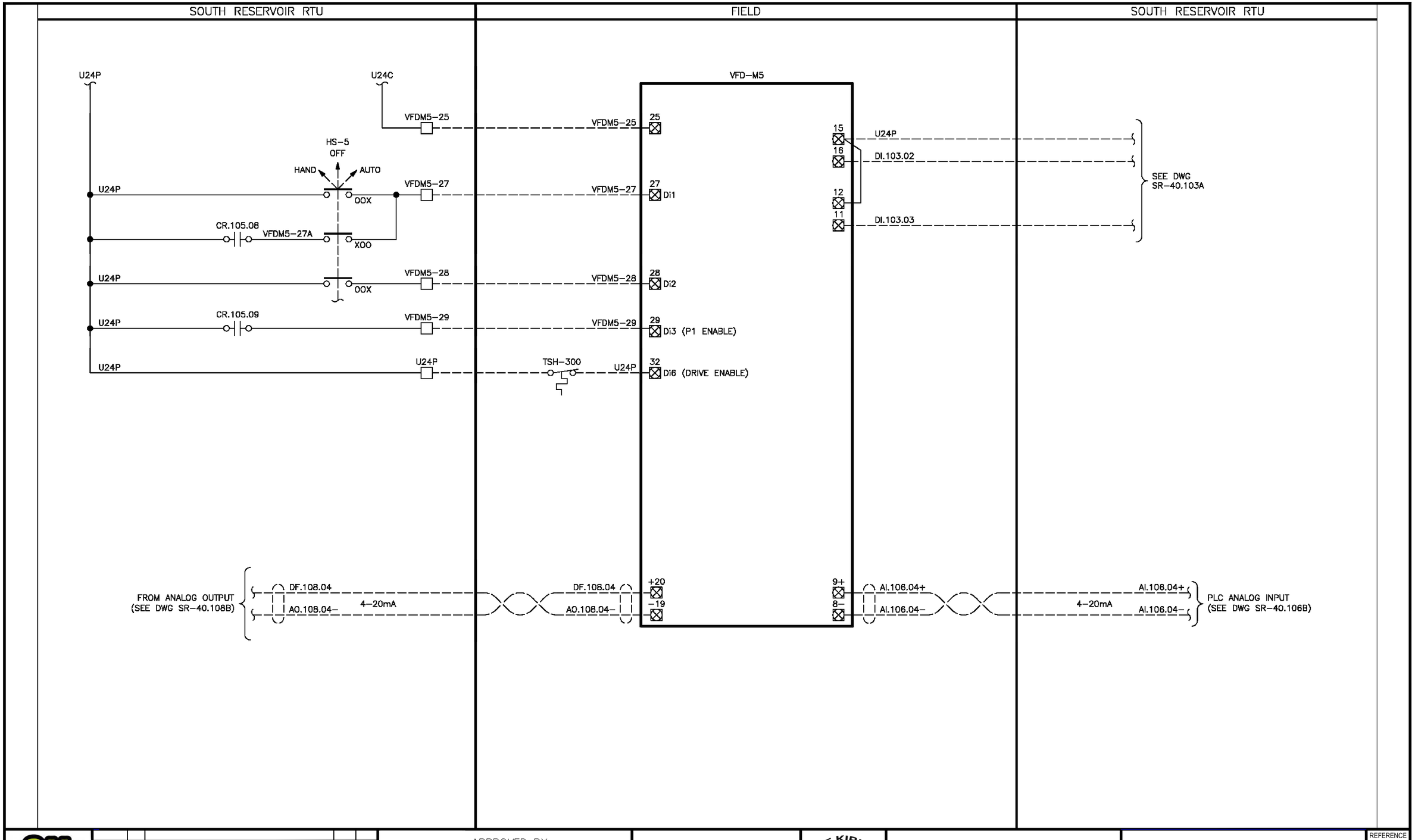

811 Know what's below. Call 811 before you dig.

DATE	NO.	REVISION	BY
X/X/X	0	BID SET	

APPROVED BY:

Rob English, PE

DATE: 3/3/2026

Ben Mahony — DESIGNED BY — 2/26/2026 DATE

Ben Mahony — DRAWN BY — 2/26/2026 DATE

I-Wen Yang, PE — REVIEWED BY — 2/26/2026 DATE

CITY OF KIRKLAND WASHINGTON

CITY OF KIRKLAND
DEPARTMENT OF PUBLIC WORKS
123 FIFTH AVENUE KIRKLAND, WA 98033
(425) 587-3800 www.kirklandwa.gov

VFD CONTROL WIRING DIAGRAM (5)
SCADA REPLACEMENT
SOUTH RESERVOIR CONTROL PANEL (SR)

REFERENCE SHEET NO.
SR-50.05

SHEET 63 of 366

SOUTH RESERVOIR RTU | FIELD | SOUTH RESERVOIR RTU

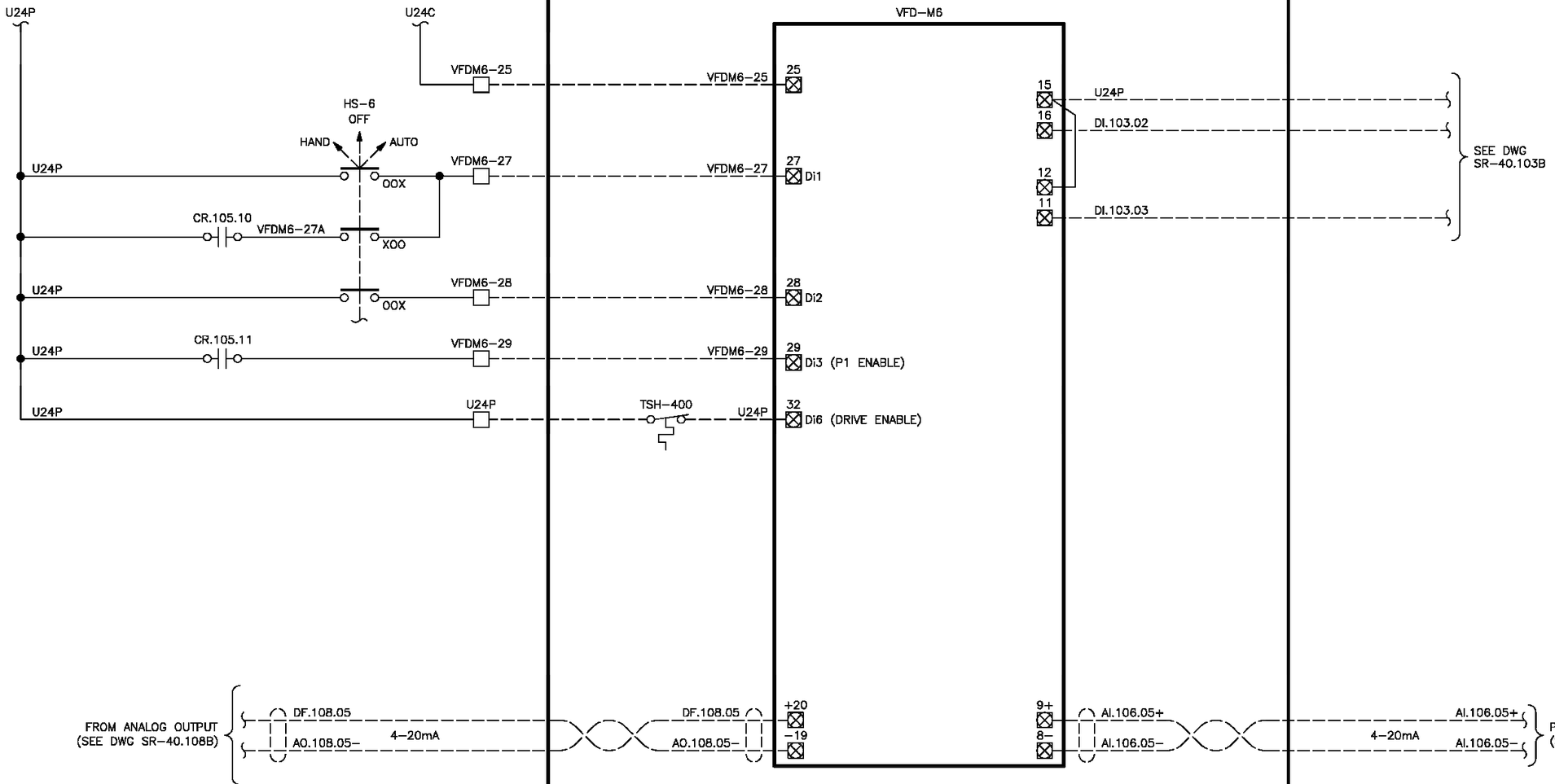

Know what's below. Call 811 before you dig.

DATE	NO.	REVISION	BY
X/X/X	0	BID SET	

APPROVED BY:

Rob English, PE

DATE: 3/3/2026

Ben Mahony (DESIGNED BY)	2/26/2026 (DATE)	
Ben Mahony (DRAWN BY)	2/26/2026 (DATE)	
I-Wen Yang, PE (REVIEWED BY)	2/26/2026 (DATE)	

CITY OF KIRKLAND

DEPARTMENT OF PUBLIC WORKS
123 FIFTH AVENUE KIRKLAND, WA 98033
(425) 587-3800 www.kirklandwa.gov

VFD CONTROL WIRING DIAGRAM (6)
SCADA REPLACEMENT

SOUTH RESERVOIR CONTROL PANEL (SR)

REFERENCE SHEET NO.
SR-50.06

SHEET 64 of 366

FIELD

SR

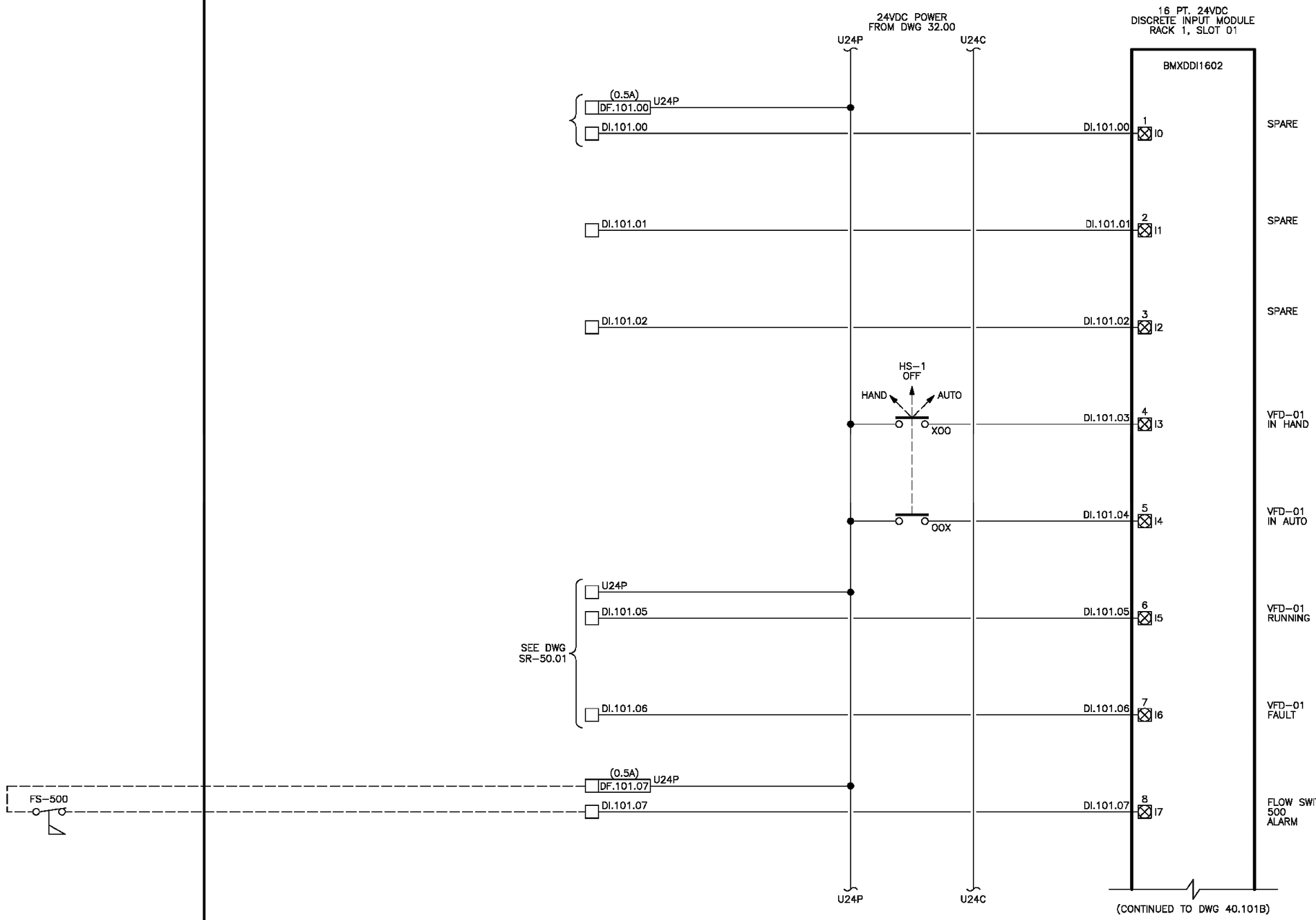

DATE	NO.	REVISION	BY
X/X/X	0	BID SET	

Know what's below. Call 811 before you dig.

APPROVED BY:

Rob English, PE

DATE: 3/3/2026

Ben Mahony — DESIGNED BY — 2/26/2026 DATE

Ben Mahony — DRAWN BY — 2/26/2026 DATE

I-Wen Yang, PE — REVIEWED BY — 2/26/2026 DATE

CITY OF KIRKLAND

DEPARTMENT OF PUBLIC WORKS
123 FIFTH AVENUE KIRKLAND, WA 98033
(425) 587-3800 www.kirklandwa.gov

DISCRETE INPUT MODULE RACK 1, SLOT 01 - WIRING DIAGRAM (1)

SCADA REPLACEMENT

SOUTH RESERVOIR CONTROL PANEL (SR)

REFERENCE SHEET NO.
SR-101A

SHEET
65
of
366

FIELD

SR

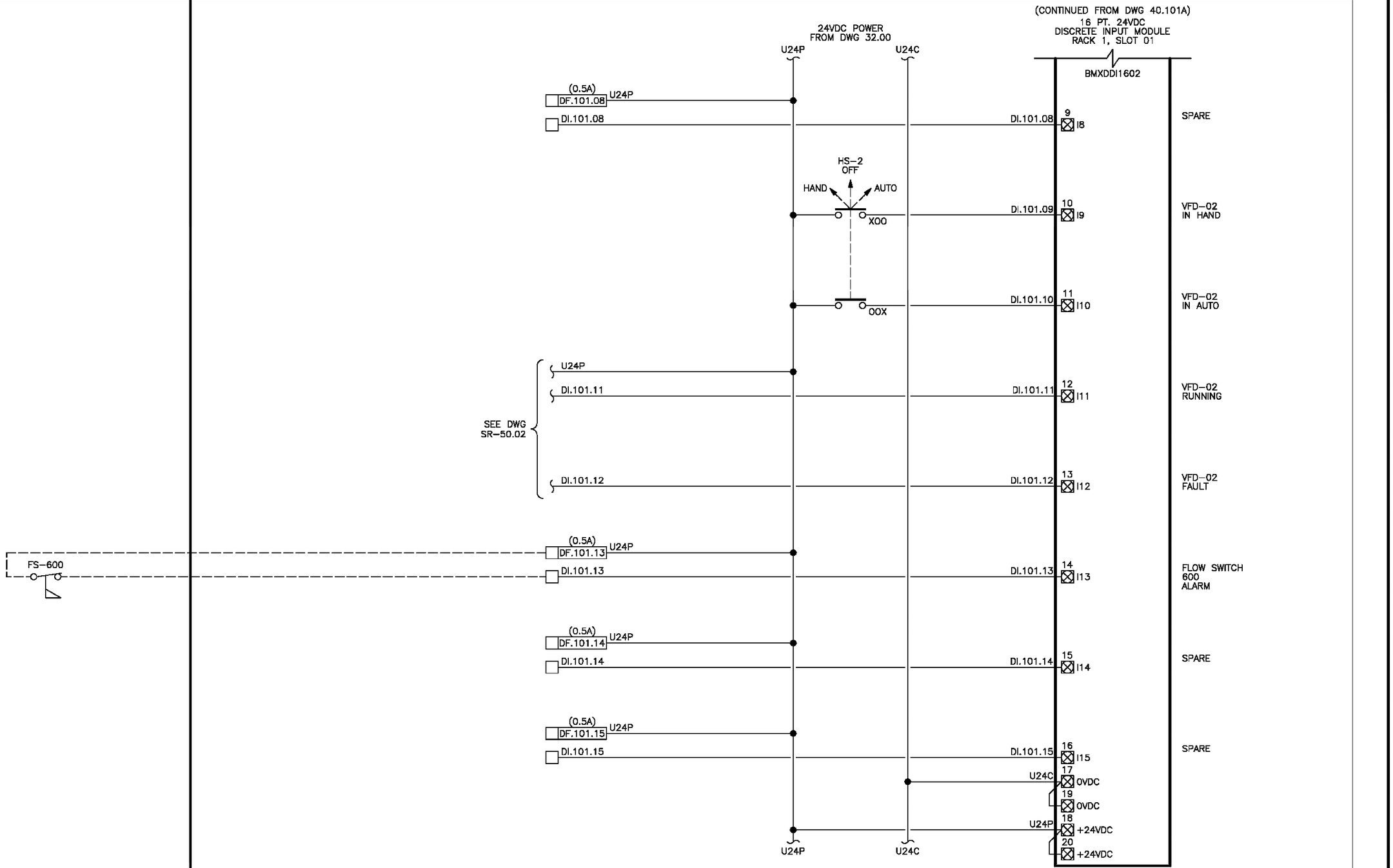

Know what's below. Call 811 before you dig.

DATE	NO.	REVISION	BY
X/X/X	0	BID SET	

APPROVED BY:

Rob English, PE

DATE: 3/3/2026

Ben Mahony (DESIGNED BY)	2/26/2026 (DATE)	
Ben Mahony (DRAWN BY)	2/26/2026 (DATE)	
I-Wen Yang, PE (REVIEWED BY)	2/26/2026 (DATE)	

CITY OF KIRKLAND

DEPARTMENT OF PUBLIC WORKS
123 FIFTH AVENUE KIRKLAND, WA 98033
(425) 587-3800 www.kirklandwa.gov

DISCRETE INPUT MODULE RACK 1, SLOT 01 - WIRING DIAGRAM (2)

SCADA REPLACEMENT

SOUTH RESERVOIR CONTROL PANEL (SR)

REFERENCE SHEET NO.
SR-101B

SHEET
66
of
366

FIELD

SR

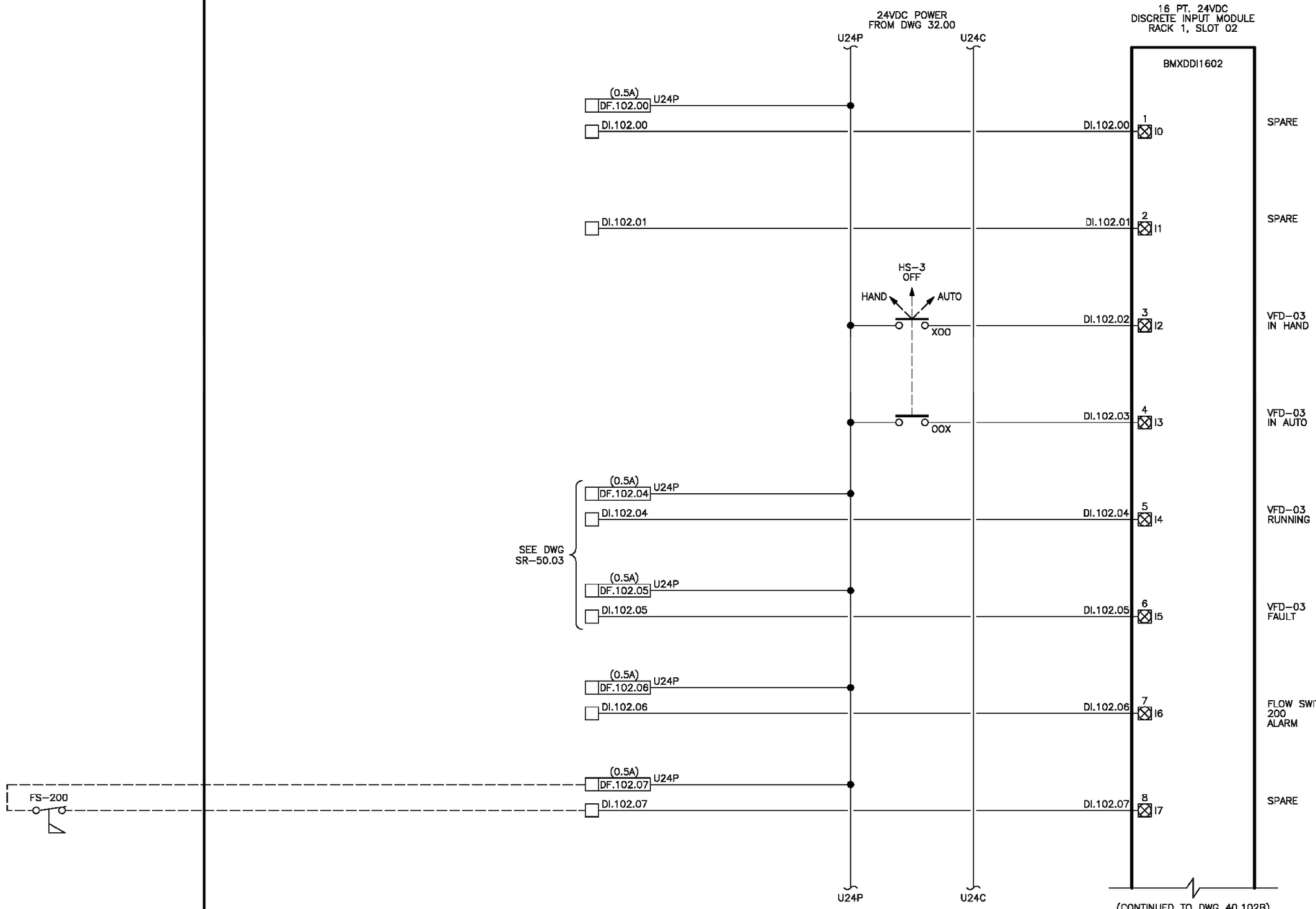

Know what's below. Call 811 before you dig.

DATE	NO.	REVISION	BY
X/X/X	0	BID SET	

APPROVED BY:

Rob English, PE

DATE: 3/3/2026

Ben Mahony — DESIGNED BY — 2/26/2026 DATE

Ben Mahony — DRAWN BY — 2/26/2026 DATE

I-Wen Yang, PE — REVIEWED BY — 2/26/2026 DATE

CITY OF KIRKLAND

DEPARTMENT OF PUBLIC WORKS
123 FIFTH AVENUE KIRKLAND, WA 98033
(425) 587-3800 www.kirklandwa.gov

DISCRETE INPUT MODULE RACK 1, SLOT 02 - WIRING DIAGRAM (1)

SCADA REPLACEMENT

SOUTH RESERVOIR CONTROL PANEL (SR)

REFERENCE SHEET NO.
SR-102A

SHEET
67
of
366

FIELD

SR

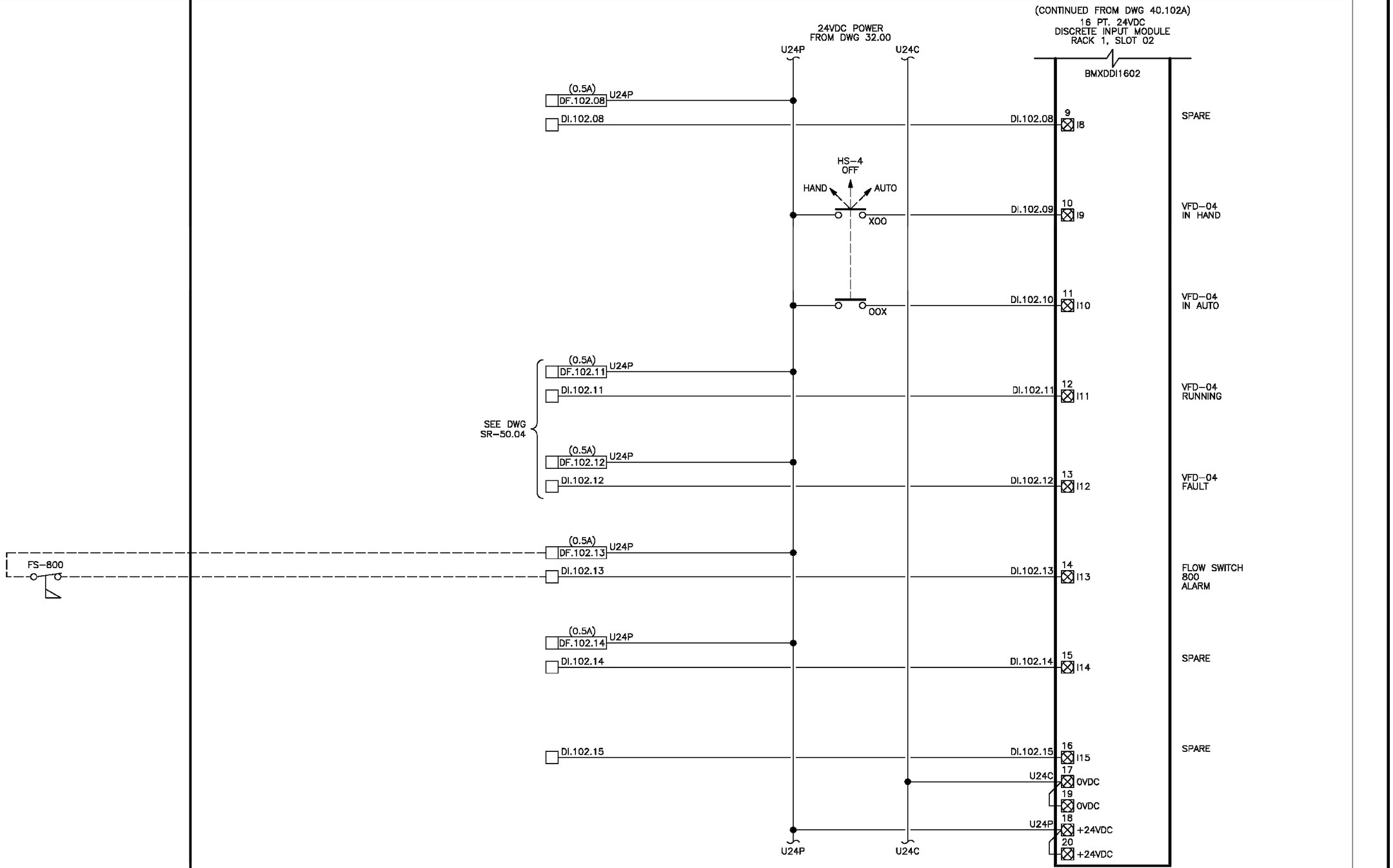

X/X/X	0	BID SET		
DATE	NO.	REVISION		BY

APPROVED BY:

Rob English, PE

DATE: 3/3/2026

Ben Mahony DESIGNED BY 2/26/2026 DATE

Ben Mahony DRAWN BY 2/26/2026 DATE

I-Wen Yang, PE REVIEWED BY 2/26/2026 DATE

CITY OF KIRKLAND

DEPARTMENT OF PUBLIC WORKS
123 FIFTH AVENUE KIRKLAND, WA 98033
(425) 587-3800 www.kirklandwa.gov

DISCRETE INPUT MODULE RACK 1, SLOT 02 - WIRING DIAGRAM (2)

SCADA REPLACEMENT

SOUTH RESERVOIR CONTROL PANEL (SR)

REFERENCE SHEET NO.
SR-102B

SHEET
68
of
366

FIELD

SR

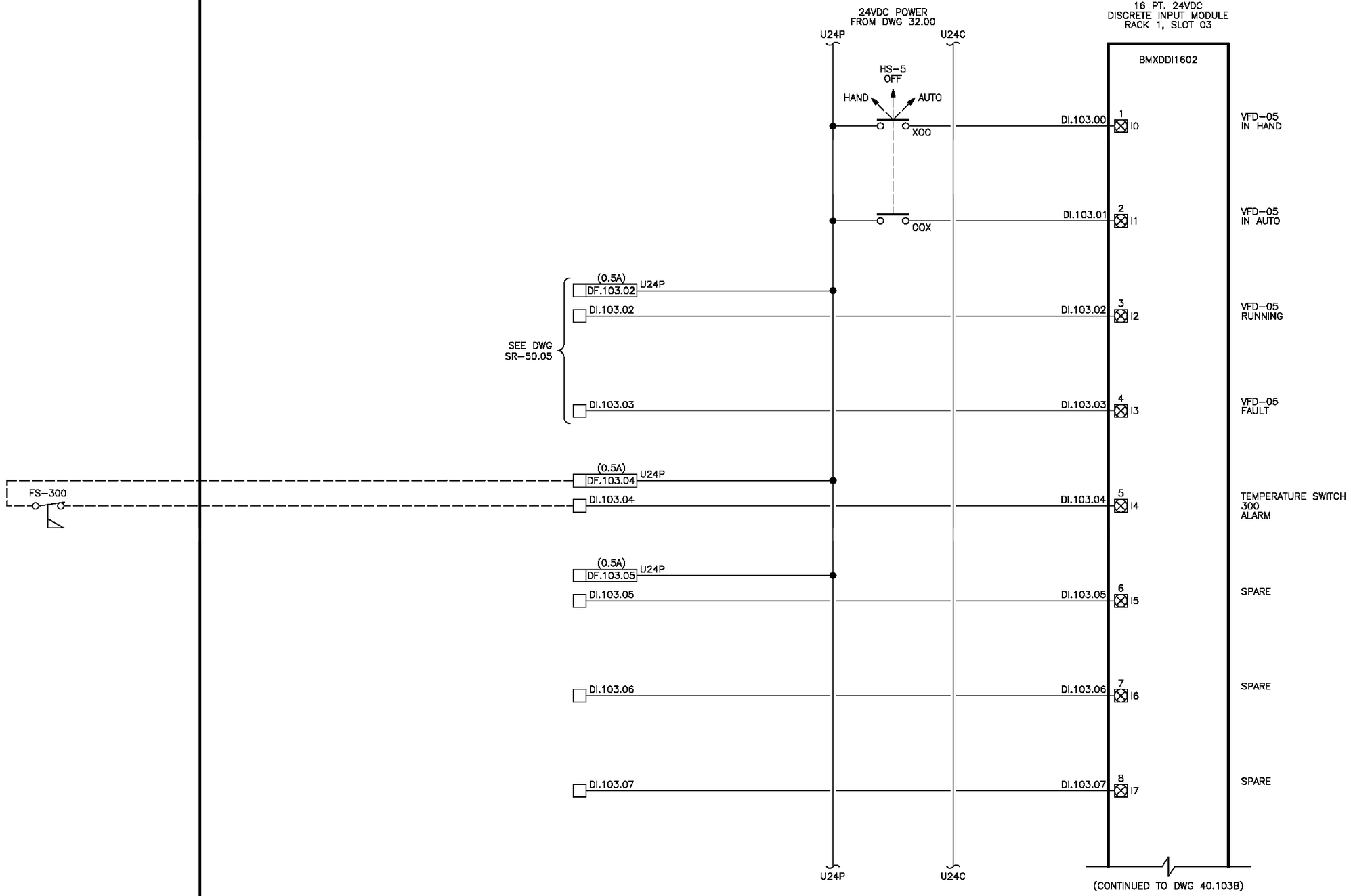

Know what's below. Call 811 before you dig.

DATE	NO.	REVISION	BY
X/X/X	0	BID SET	

APPROVED BY:

Rob English, PE

DATE: 3/3/2026

Ben Mahony — DESIGNED BY — 2/26/2026 DATE

Ben Mahony — DRAWN BY — 2/26/2026 DATE

I-Wen Yang, PE — REVIEWED BY — 2/26/2026 DATE

CITY OF KIRKLAND

DEPARTMENT OF PUBLIC WORKS
123 FIFTH AVENUE KIRKLAND, WA 98033
(425) 587-3800 www.kirklandwa.gov

DISCRETE INPUT MODULE RACK 1, SLOT 03 - WIRING DIAGRAM (1)

SCADA REPLACEMENT

SOUTH RESERVOIR CONTROL PANEL (SR)

REFERENCE SHEET NO.
SR-103A

SHEET
69
of
366

FIELD | SR

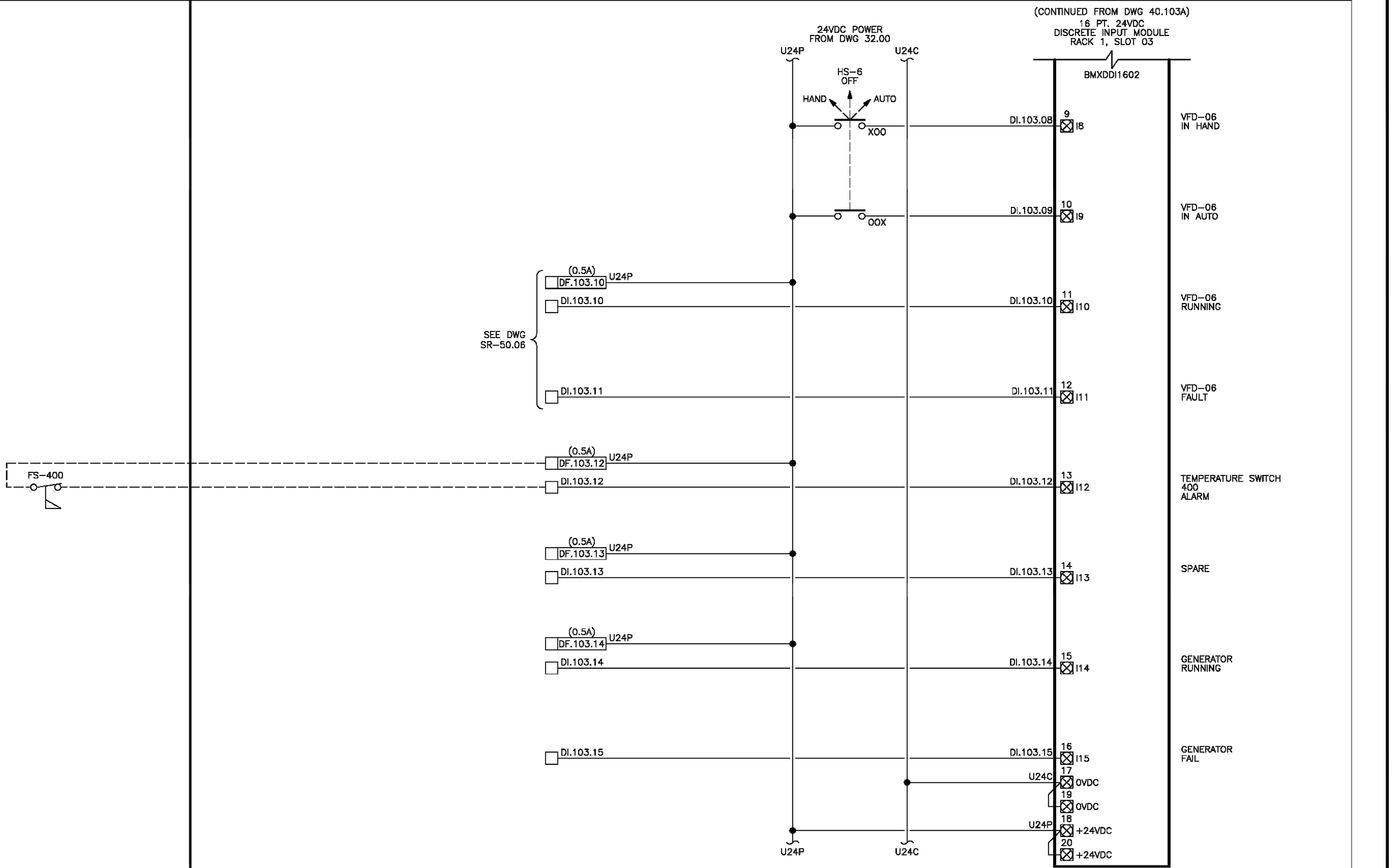

Know what's below. Call 811 before you dig.

DATE	NO.	REVISION	BY
X/X/X	0	BID SET	

APPROVED BY:

Rob English, PE

DATE: 3/3/2026

Ben Mahony	DESIGNED BY	2/26/2026 DATE
Ben Mahony	DRAWN BY	2/26/2026 DATE
I-Wen Yang, PE	REVIEWED BY	2/26/2026 DATE

CITY OF KIRKLAND

DEPARTMENT OF PUBLIC WORKS
123 FIFTH AVENUE KIRKLAND, WA 98033
(425) 587-3800 www.kirklandwa.gov

DISCRETE INPUT MODULE RACK 1, SLOT 03 - WIRING DIAGRAM (2)

SCADA REPLACEMENT

SOUTH RESERVOIR CONTROL PANEL (SR)

REFERENCE SHEET NO.
SR-103B

SHEET 70 of 366

FIELD | SR

24VDC POWER FROM DWG 32.00

U24P | U24C

16 PT. 24VDC DISCRETE INPUT MODULE RACK 1, SLOT 04

BMXDDI1602

YS-962 (7 / 8)	(0.5A) DF.104.00 U24P	DI.104.00	DI.104.00	1 I0	GENERATOR ROOM SMOKE ALARM
YS-963 (7 / 8)	(0.5A) DF.104.01 U24P	DI.104.01	DI.104.01	2 I1	PUMP ROOM SMOKE ALARM
YS-964 (7 / 8)	(0.5A) DF.104.02 U24P	DI.104.02	DI.104.02	3 I2	STORAGE ROOM SMOKE ALARM
	(0.5A) DF.104.03 U24P	DI.104.03	DI.104.03	4 I3	SPARE
	(0.5A) DF.104.04 U24P	DI.104.04	DI.104.04	5 I4	SPARE
YS-900A	(0.5A) DF.104.05 U24P	DI.104.05	DI.104.05	6 I5	STORAGE ROOM INTRUSION
YS-900B	(0.5A) DF.104.06 U24P	DI.104.06	DI.104.06	7 I6	NORTH PUMP ROOM INTRUSION
YS-900C	(0.5A) DF.104.07 U24P	DI.104.07	DI.104.07	8 I7	SOUTH PUMP ROOM INTRUSION

U24P | U24C

(CONTINUED TO DWG 40.104B)

Know what's below. Call 811 before you dig.

DATE	NO.	REVISION	BY
X/X/X	0	BID SET	

APPROVED BY:

Rob English, PE

DATE: 3/3/2026

Ben Mahony (DESIGNED BY)	2/26/2026 (DATE)	
Ben Mahony (DRAWN BY)	2/26/2026 (DATE)	
I-Wen Yang, PE (REVIEWED BY)	2/26/2026 (DATE)	

CITY OF KIRKLAND
DEPARTMENT OF PUBLIC WORKS
123 FIFTH AVENUE KIRKLAND, WA 98033
(425) 587-3800 www.kirklandwa.gov

DISCRETE INPUT MODULE RACK 1, SLOT 04 - WIRING DIAGRAM (1)

SCADA REPLACEMENT

SOUTH RESERVOIR CONTROL PANEL (SR)

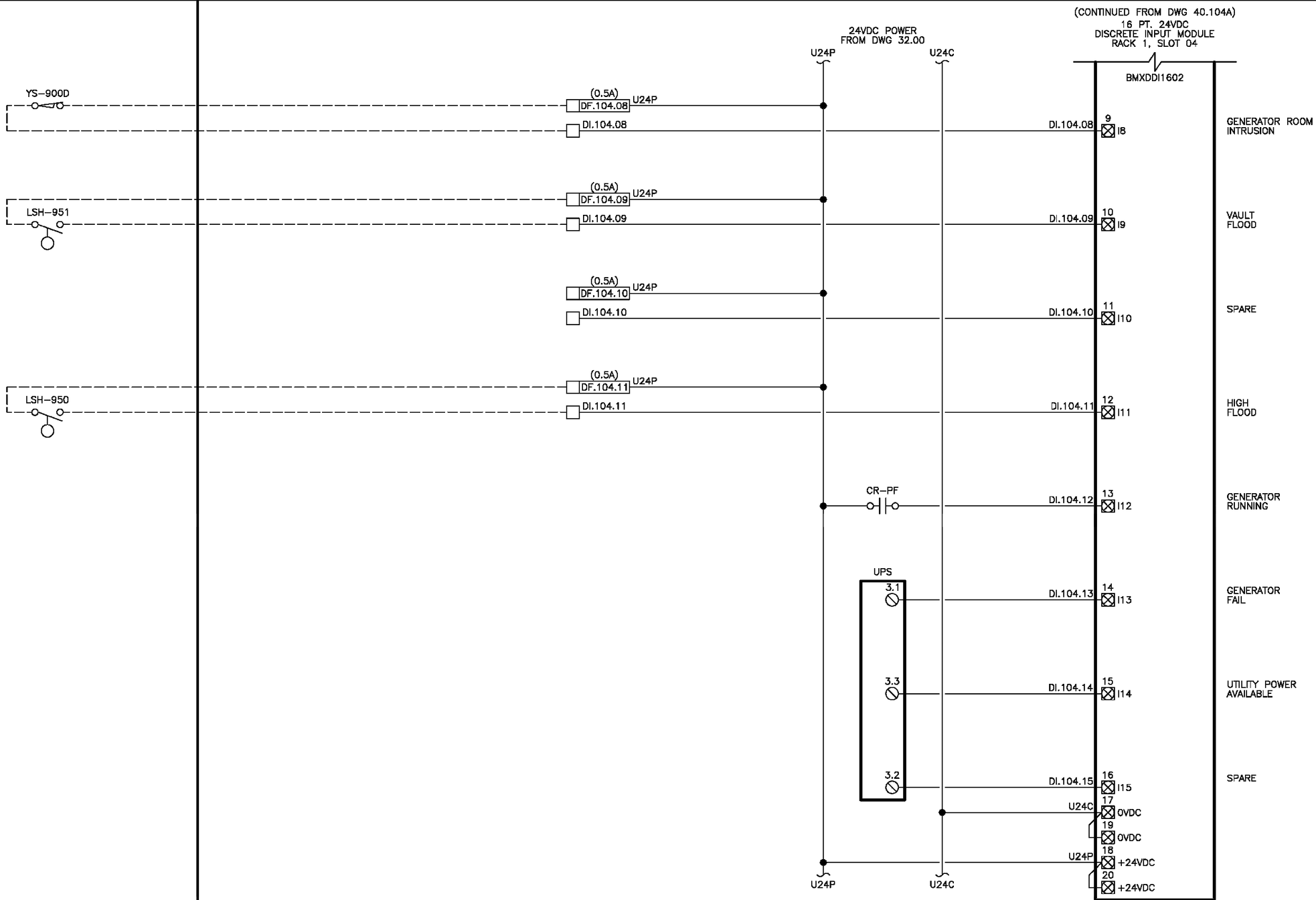

Know what's below. Call 811 before you dig.

DATE	NO.	REVISION	BY
X/X/X	0	BID SET	

APPROVED BY:

Rob English, PE

DATE: 3/3/2026

Ben Mahony	DESIGNED BY	2/26/2026 DATE
Ben Mahony	DRAWN BY	2/26/2026 DATE
I-Wen Yang, PE	REVIEWED BY	2/26/2026 DATE

CITY OF KIRKLAND

DEPARTMENT OF PUBLIC WORKS
123 FIFTH AVENUE KIRKLAND, WA 98033
(425) 587-3800 www.kirklandwa.gov

DISCRETE INPUT MODULE RACK 1, SLOT 04 - WIRING DIAGRAM (2)

SCADA REPLACEMENT

SOUTH RESERVOIR CONTROL PANEL (SR)

REFERENCE SHEET NO.
SR-104B

SHEET
72
of
366

FIELD

SR

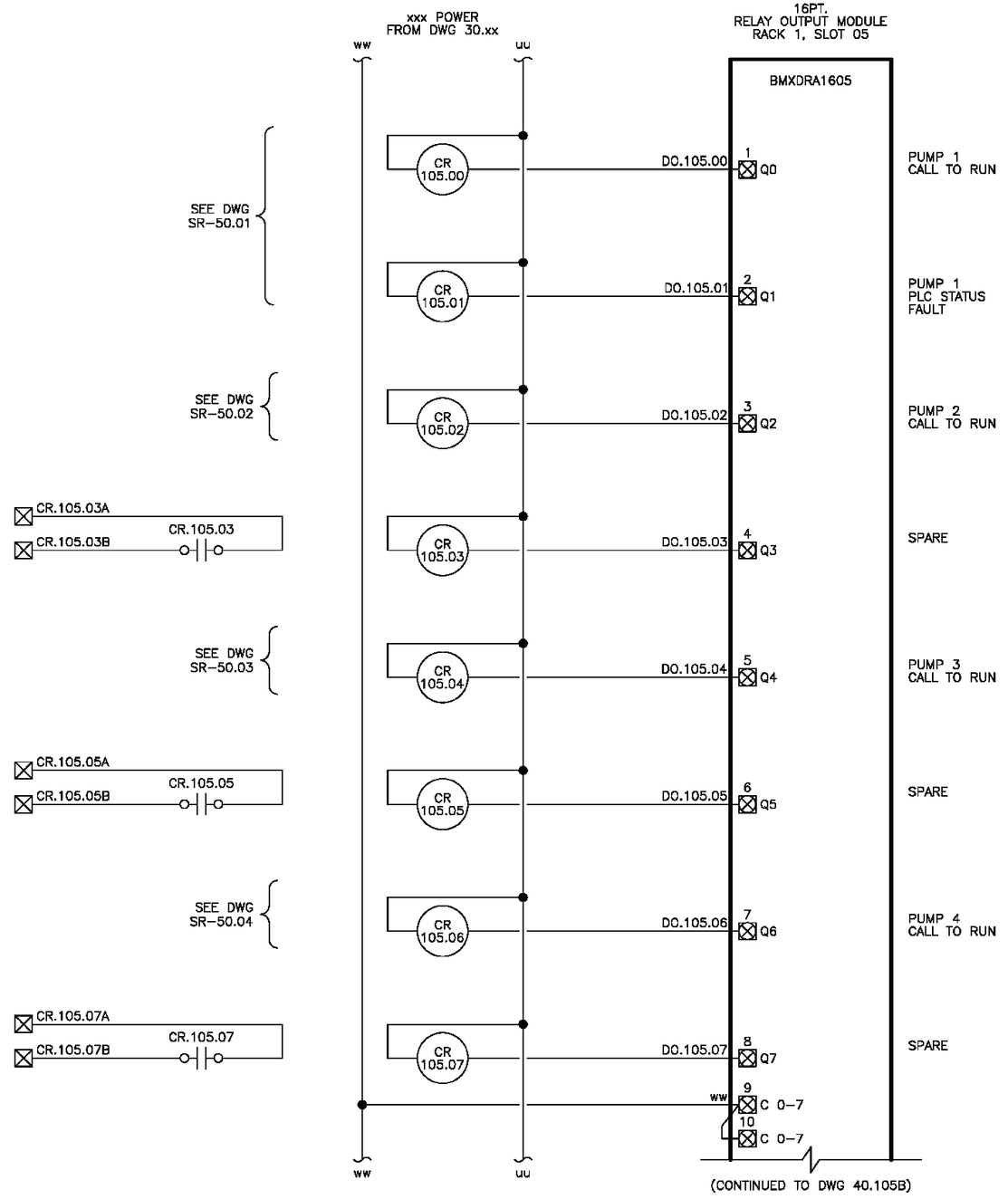

DATE	NO.	REVISION	BY
X/X/X	0	BID SET	

Know what's below. Call 811 before you dig.

APPROVED BY:

Rob English, PE

DATE: 3/3/2026

Ben Mahony — DESIGNED BY — 2/26/2026 DATE

Ben Mahony — DRAWN BY — 2/26/2026 DATE

I-Wen Yang, PE — REVIEWED BY — 2/26/2026 DATE

CITY OF KIRKLAND

DEPARTMENT OF PUBLIC WORKS
123 FIFTH AVENUE KIRKLAND, WA 98033
(425) 587-3800 www.kirklandwa.gov

RELAY OUTPUT MODULE RACK 1, SLOT 05 - WIRING DIAGRAM (1)

SCADA REPLACEMENT

SOUTH RESERVOIR CONTROL PANEL (SR)

REFERENCE SHEET NO.
SR-105A

SHEET
73
of
366

FIELD	SR

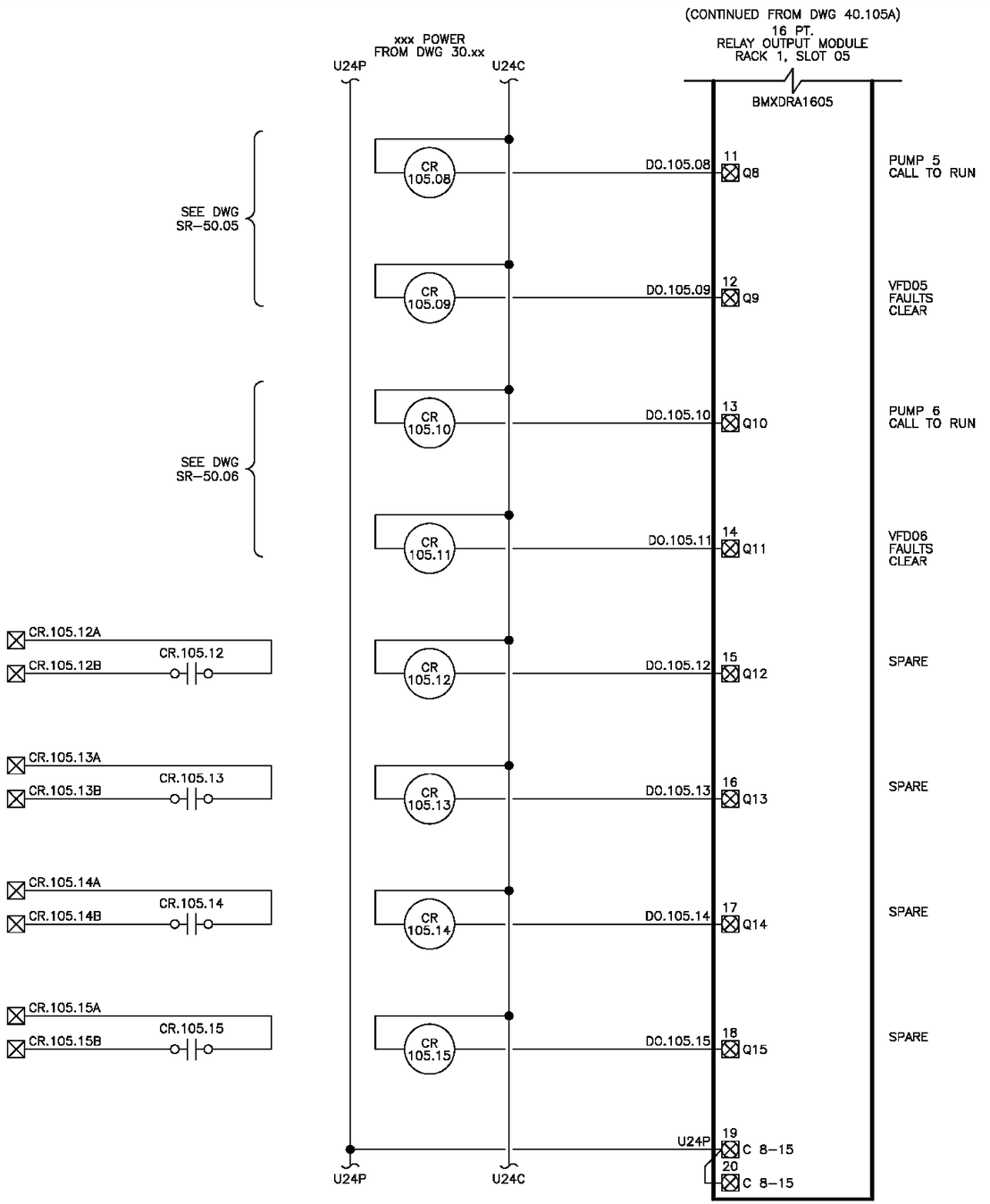

NO.	DATE	REVISION	BY
0	X/X/X	BID SET	

Know what's below. Call 811 before you dig.

APPROVED BY:

Rob English, PE

DATE: 3/3/2026

Ben Mahony	DESIGNED BY	2/26/2026 DATE
Ben Mahony	DRAWN BY	2/26/2026 DATE
I-Wen Yang, PE	REVIEWED BY	2/26/2026 DATE

CITY OF KIRKLAND WASHINGTON

CITY OF KIRKLAND

DEPARTMENT OF PUBLIC WORKS
123 FIFTH AVENUE KIRKLAND, WA 98033
(425) 587–3800 www.kirklandwa.gov

RELAY OUTPUT MODULE RACK 1, SLOT 05 - WIRING DIAGRAM (2)

SCADA REPLACEMENT

SOUTH RESERVOIR CONTROL PANEL (SR)

REFERENCE SHEET NO.
SR-105B

SHEET 74 of 366

FIELD	SR

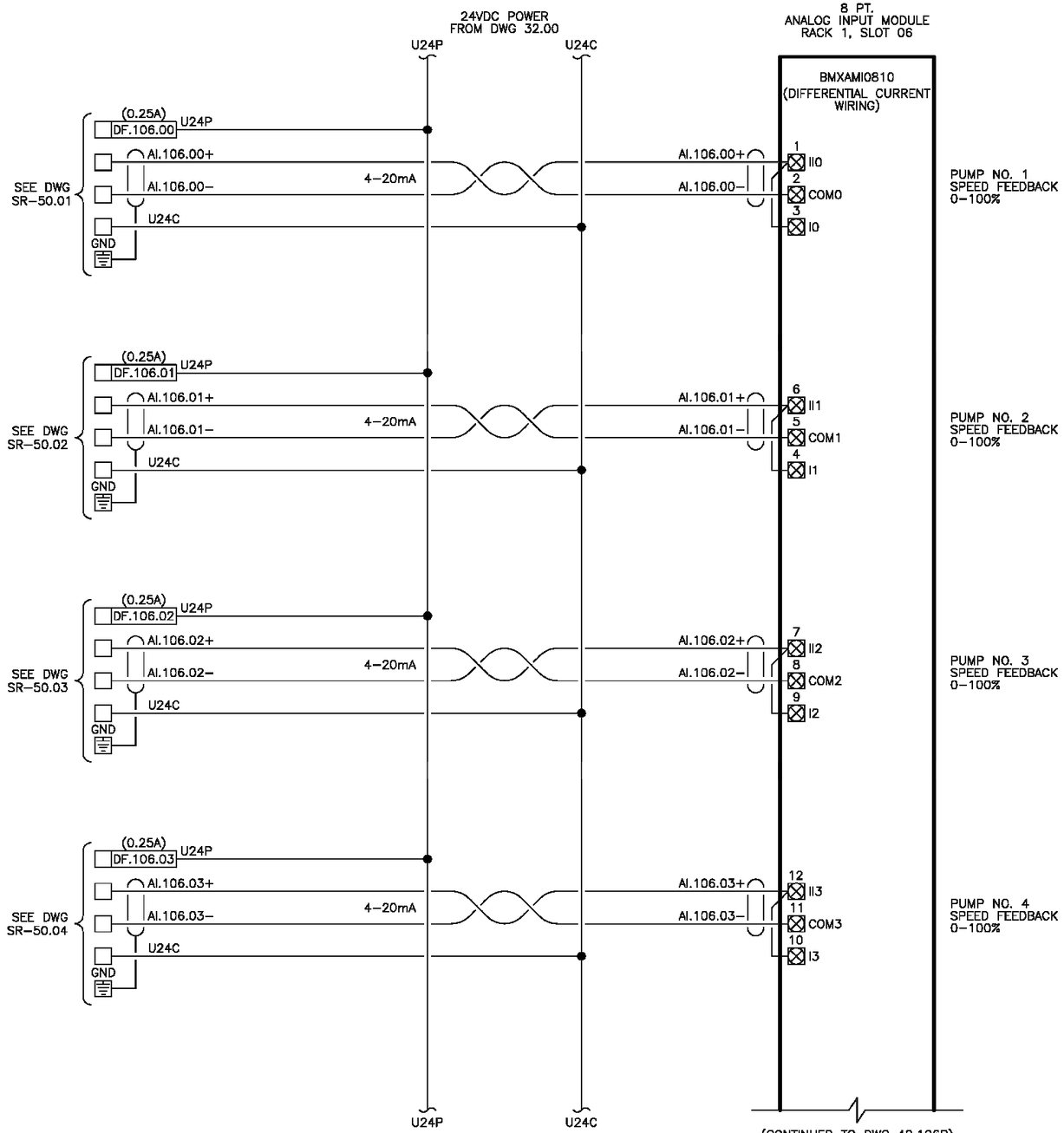

NOTE: REMOVE JUMPER FOR 4–WIRE DEVICE.

Know what's below. Call 811 before you dig.

DATE	NO.	REVISION	BY
X/X/X	0	BID SET	

APPROVED BY:

Rob English, PE

DATE: 3/3/2026

Ben Mahony — DESIGNED BY — 2/26/2026 DATE

Ben Mahony — DRAWN BY — 2/26/2026 DATE

I-Wen Yang, PE — REVIEWED BY — 2/26/2026 DATE

CITY OF KIRKLAND

DEPARTMENT OF PUBLIC WORKS
123 FIFTH AVENUE KIRKLAND, WA 98033
(425) 587–3800 www.kirklandwa.gov

ANALOG INPUT MODULE RACK 1, SLOT 06 - WIRING DIAGRAM (1)

SCADA REPLACEMENT

SOUTH RESERVOIR CONTROL PANEL (SR)

REFERENCE SHEET NO.
SR-106A

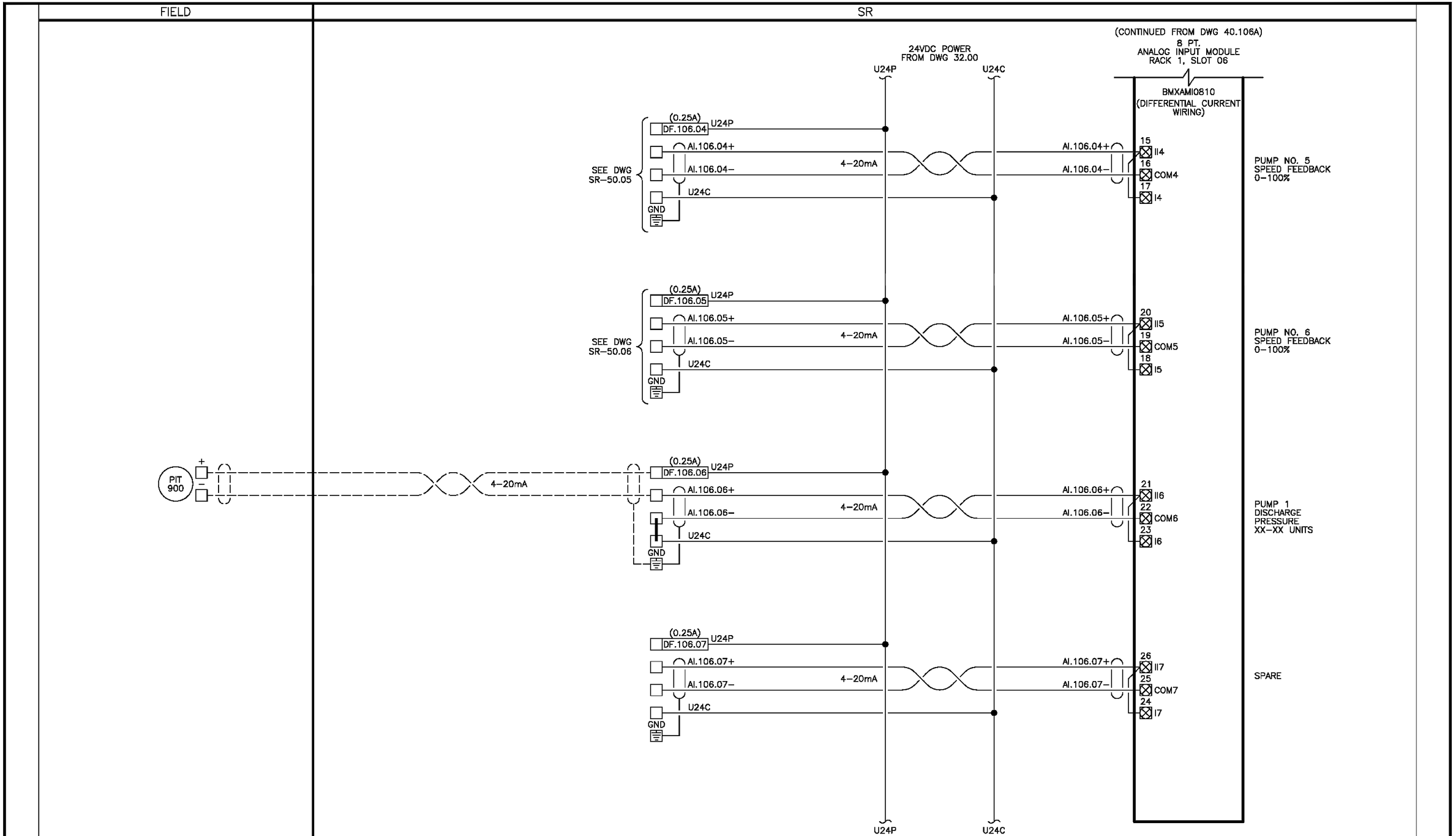

DATE	NO.	REVISION	BY
X/X/X	0	BID SET	

APPROVED BY:

Rob English, PE

DATE: 3/3/2026

Ben Mahony — DESIGNED BY — 2/26/2026 DATE

Ben Mahony — DRAWN BY — 2/26/2026 DATE

I-Wen Yang, PE — REVIEWED BY — 2/26/2026 DATE

CITY OF KIRKLAND

DEPARTMENT OF PUBLIC WORKS
123 FIFTH AVENUE KIRKLAND, WA 98033
(425) 587–3800 www.kirklandwa.gov

ANALOG INPUT MODULE RACK 1, SLOT 06 - WIRING DIAGRAM (2)

SCADA REPLACEMENT

SOUTH RESERVOIR CONTROL PANEL (SR)

REFERENCE SHEET NO.
SR-106B

SHEET 76 of 366

FIELD | SR

120VAC POWER FROM PANEL X, CIRCUIT Y

L1 L2 G

FE FIT 150 (+ / −)

4–20mA

(0.25A) DF.107.00 U24P

AI.107.00+

AI.107.00–

U24C

GND

4–20mA

24VDC POWER FROM DWG 32.00

U24P

U24C

8 PT. ANALOG INPUT MODULE RACK 1, SLOT 07

BMXAMI0810 (DIFFERENTIAL CURRENT WIRING)

AI.107.00+ → 1 II0

AI.107.00– → 2 COM0

3 I0

545 ZONE 20" MAIN FLOW 0–6000 GPM

120VAC POWER FROM PANEL X, CIRCUIT Y

FE FIT 101 (+ / −)

4–20mA

(0.25A) DF.107.01 U24P

AI.107.01+

AI.107.01–

U24C

GND

4–20mA

AI.107.01+ → 6 II1

AI.107.01– → 5 COM1

4 I1

545 ZONE 16" MAIN FLOW 0–4000 GPM

120VAC POWER FROM PANEL X, CIRCUIT Y

L1 L2 G

FE FIT 800 (+ / −)

4–20mA

(0.25A) DF.107.02 U24P

AI.107.02+

AI.107.02–

U24C

GND

4–20mA

AI.107.02+ → 7 II2

AI.107.02– → 8 COM2

9 I2

650 ZONE FLOW 0–6000 GPM

120VAC POWER FROM PANEL X, CIRCUIT Y

L1 L2 G

PT 101 (+ / −)

4–20mA

(0.25A) DF.107.03 U24P

AI.107.03+

AI.107.03–

U24C

GND

4–20mA

AI.107.03+ → 12 II3

AI.107.03– → 11 COM3

10 I3

RESERVOIR PRESSURE 0–100 PSI

U24P

U24C

(CONTINUED TO DWG 40.107B)

NOTE: REMOVE JUMPER FOR 4–WIRE DEVICE.

811 Know what's below. Call 811 before you dig.

DATE	NO.	REVISION	BY
X/X/X	0	BID SET	

APPROVED BY:

Rob English, PE

DATE: 3/3/2026

Ben Mahony DESIGNED BY 2/26/2026 DATE

Ben Mahony DRAWN BY 2/26/2026 DATE

I-Wen Yang, PE REVIEWED BY 2/26/2026 DATE

CITY OF KIRKLAND WASHINGTON

CITY OF KIRKLAND
DEPARTMENT OF PUBLIC WORKS
123 FIFTH AVENUE KIRKLAND, WA 98033
(425) 587–3800 www.kirklandwa.gov

ANALOG INPUT MODULE RACK 1, SLOT 07 - WIRING DIAGRAM (1)

SCADA REPLACEMENT

SOUTH RESERVOIR CONTROL PANEL (SR)

REFERENCE SHEET NO. SR-107A

FIELD

SR

(CONTINUED FROM DWG 40.107A)

8 PT.
ANALOG INPUT MODULE
RACK 1, SLOT 07

BMXAMI0810
(DIFFERENTIAL CURRENT WIRING)

24VDC POWER
FROM DWG 32.00

U24P

U24C

PIT 1000 — 4–20mA — (0.25A) DF.107.04 U24P
AI.107.04+
AI.107.04–
U24C
GND
4–20mA
AI.107.04+ — 15 II4
AI.107.04– — 16 COM4
17 I4
PUMP 2 DISCHARGE PRESSURE XX–XX UNITS

PIT 800 — 4–20mA — (0.25A) DF.107.05 U24P
AI.107.05+
AI.107.05–
U24C
GND
4–20mA
AI.107.05+ — 20 II5
AI.107.05– — 19 COM5
18 I5
650 ZONE PRESSURE 0–150 PSI

PIT 800A — SEE DWG 50.01 — (0.25A) DF.107.06 U24P
AI.107.06+
AI.107.06–
U24C
GND
4–20mA
AI.107.06+ — 21 II6
AI.107.06– — 22 COM6
23 I6
650 ZONE (BACKUP METER) PRESSURE 0–150 PSI

120VAC POWER
FROM PANEL X, CIRCUIT Y

L1 L2 G

FE FIT 151 — 4–20mA — (0.25A) DF.107.07 U24P
AI.107.07+
AI.107.07–
U24C
GND
4–20mA
AI.107.07+ — 26 II7
AI.107.07– — 25 COM7
24 I7
545 ZONE 12" MAIN FLOW 0–6000 GPM

U24P

U24C

NOTE: REMOVE JUMPER FOR 4–WIRE DEVICE.

Know what's below. Call 811 before you dig.

DATE	NO.	REVISION	BY
X/X/X	0	BID SET	

APPROVED BY:

Rob English, PE

DATE: 3/3/2026

Ben Mahony — DESIGNED BY — 2/26/2026 DATE

Ben Mahony — DRAWN BY — 2/26/2026 DATE

I-Wen Yang, PE — REVIEWED BY — 2/26/2026 DATE

CITY OF KIRKLAND WASHINGTON

CITY OF KIRKLAND

DEPARTMENT OF PUBLIC WORKS
123 FIFTH AVENUE KIRKLAND, WA 98033
(425) 587–3800 www.kirklandwa.gov

ANALOG INPUT MODULE RACK 1, SLOT 07 - WIRING DIAGRAM (2)

SCADA REPLACEMENT

SOUTH RESERVOIR CONTROL PANEL (SR)

REFERENCE SHEET NO.
SR-107B

SHEET 78 of 366

FIELD	SR

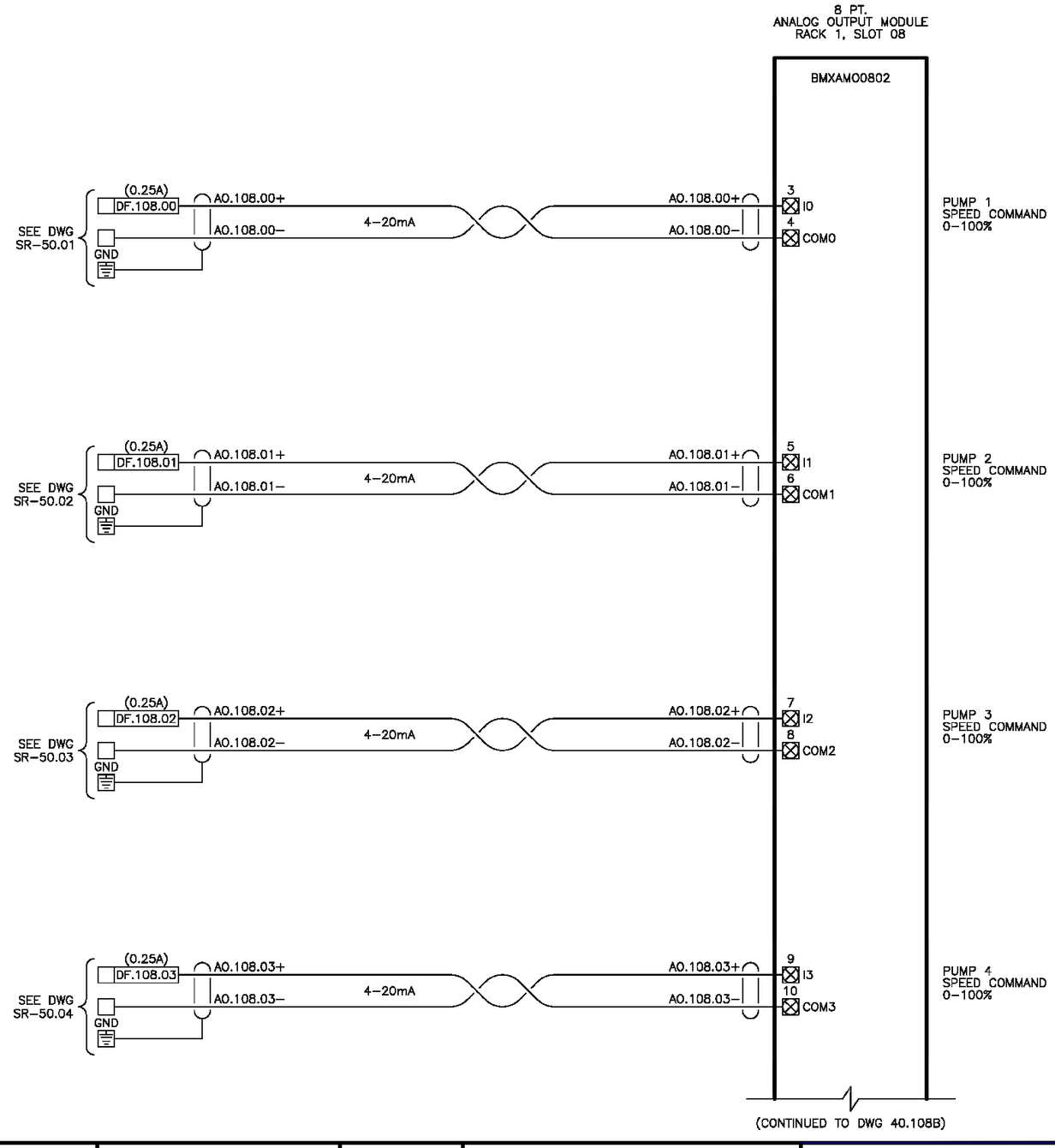

Know what's below. Call 811 before you dig.

DATE	NO.	REVISION	BY
X/X/X	0	BID SET	

APPROVED BY:

Rob English, PE

DATE: 3/3/2026

Ben Mahony — DESIGNED BY — 2/26/2026 DATE

Ben Mahony — DRAWN BY — 2/26/2026 DATE

I-Wen Yang, PE — REVIEWED BY — 2/26/2026 DATE

CITY OF KIRKLAND WASHINGTON

CITY OF KIRKLAND

DEPARTMENT OF PUBLIC WORKS
123 FIFTH AVENUE KIRKLAND, WA 98033
(425) 587–3800 www.kirklandwa.gov

ANALOG OUTPUT MODULE RACK 1, SLOT 08 - WIRING DIAGRAM (1)

SCADA REPLACEMENT

SOUTH RESERVOIR CONTROL PANEL (SR)

REFERENCE SHEET NO.
SR-108A

SHEET
79
of
366

FIELD	SR

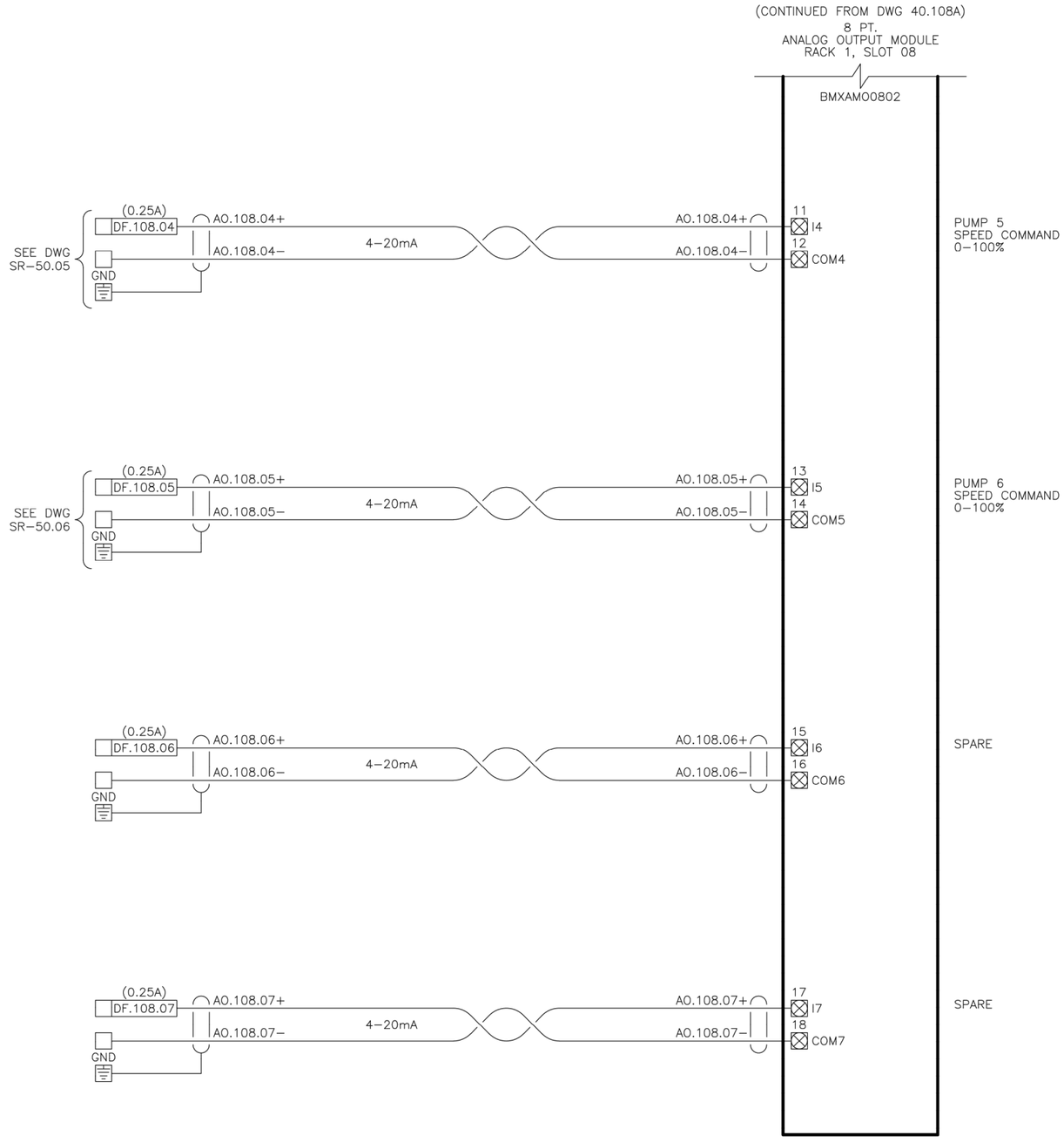

DATE	NO.	REVISION	BY
X/X/X	0	BID SET	

Know what's below. Call 811 before you dig.

APPROVED BY:

Rob English, PE

DATE: 3/3/2026

Ben Mahony — DESIGNED BY — 2/26/2026 DATE

Ben Mahony — DRAWN BY — 2/26/2026 DATE

I-Wen Yang, PE — REVIEWED BY — 2/26/2026 DATE

CITY OF KIRKLAND

DEPARTMENT OF PUBLIC WORKS
123 FIFTH AVENUE KIRKLAND, WA 98033
(425) 587-3800 www.kirklandwa.gov

ANALOG OUTPUT MODULE RACK 1, SLOT 08 - WIRING DIAGRAM (2)

SCADA REPLACEMENT

SOUTH RESERVOIR CONTROL PANEL (SR)

REFERENCE SHEET NO.
SR-108B

SHEET 80 of 366

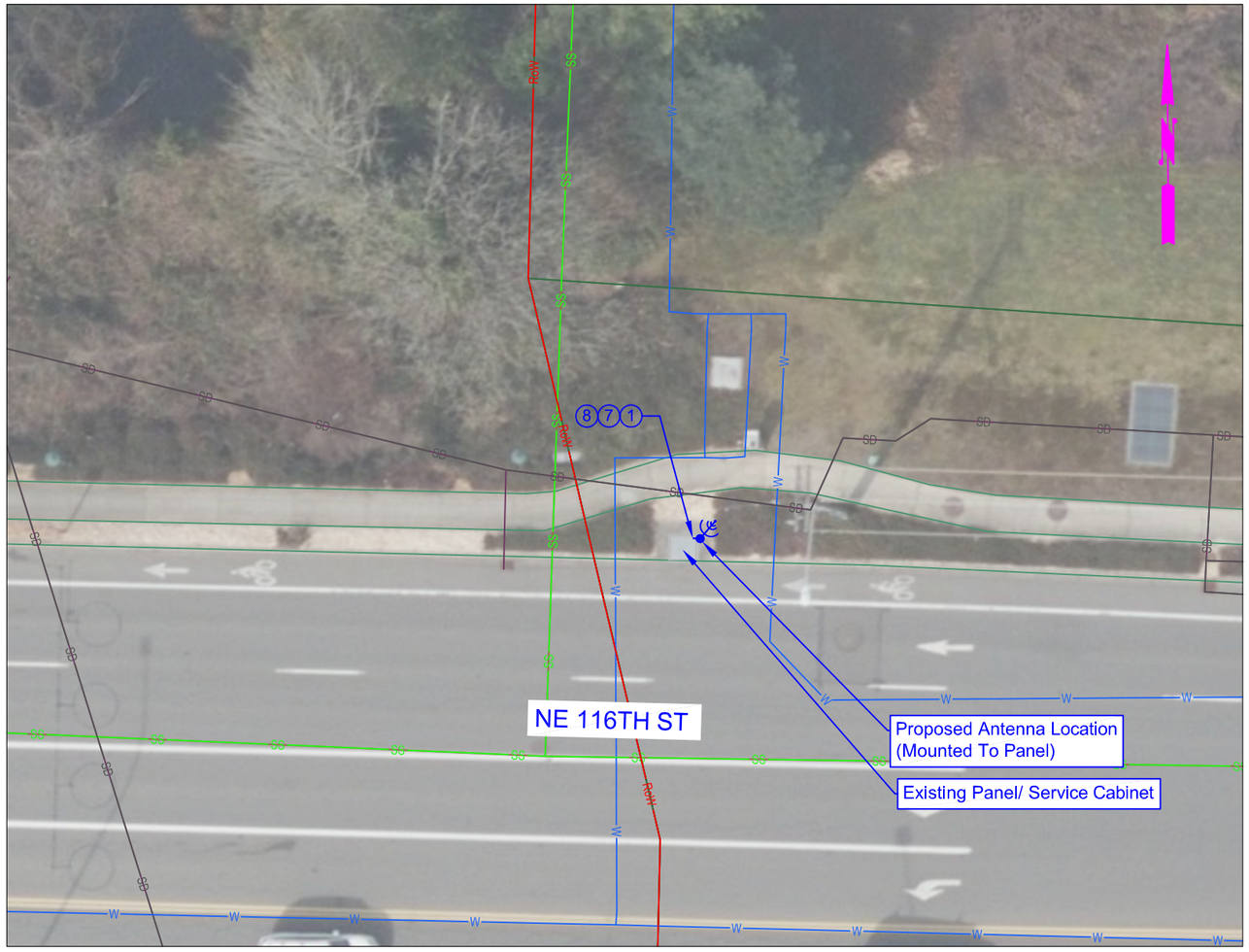

20 10 0 20 40

SITE: P1
UTILITY: Water
PROJECT ADDRESS: 12230 NE 116th St, Kirkland, WA 98034

GIS DISCLAIMER:
The as-built and utility information shown in the project plans are based on the City of Kirkland's available GIS information. Thus, the contractor shall field verify all of the proposed conditions and limits. Additionally, the contractor shall call for utility locates at least 48 hours prior to any trenching or excavation work to field verify that no utility conflicts exist with the proposed excavation limits.

A SOUTH-WEST VIEW
NOT TO SCALE

B NORTH VIEW
NOT TO SCALE

CONSTRUCTION NOTES:

1. TO REPLACE PANEL AND UPDATE THE SOFTWARE IN THE SERVICE CABINET PER THE SITE-SPECIFIC BILL OF MATERIALS (BOM'S).
2. TO INSTALL 4-INCH SCH. 40 CONDUIT PIPING AND REPLACE BACKFILL WITH NATIVE SOILS, IN KIND.
3. TO PROTECT EXISTING BURIED UTILITY, SEE GENERAL NOTE 1.
4. TO PROTECT EXISTING BURIED POWER AND/ OR FRANCHISE UTILITY, SEE GENERAL NOTE 1.
5. TO INSTALL FIBER CABLE THROUGH EXISTING FIBER CONDUIT.
6. TO REMOVE AND REPLACE CONCRETE SIDEWALK.
7. TO CORE-DRILL HOLE(S) INTO EXISTING STRUCTURE AND/ OR EXISTING SERVICE CABINET.
8. TO INSTALL EXTERNAL MOUNTED LOW-PROFILE (4 FT HIGH POLE HEIGHT) ANTENNA PER ANTENNA STANDARD DETAIL.
9. TO INSTALL EXTERNAL MOUNTED HIGH-PROFILE (20 FT HIGH POLE HEIGHT) ANTENNA PER ANTENNA STANDARD DETAIL.
10. TO INSTALL INTERNAL PANEL-MOUNTED LOW-PROFILE (2 FT HIGH POLE HEIGHT) ANTENNA PER ANTENNA STANDARD DETAIL.
11. TO INSTALL FULL-PROFILE (20 FT HIGH POLE HEIGHT) ANTENNA WITH A CONCRETE ANCHOR PER ANTENNA AND ANTENNA BASE STANDARD DETAIL.
12. TO SALVAGE AND REUSE EXISTING ANTENNA STRUCTURE AND INSTALL PROPOSED ANTENNA EQUIPMENT.
13. TO REMOVE EXISTING YAGI ANTENNA ON THE EXISTING ANTENNA POLE STRUCTURE.
14. TO INSTALL NEMA 4X ENCLOSURE ON PROPOSED OR EXISTING ANTENNA POLE STRUCTURE WITH THE NEW MODEM INSIDE THE ENCLOSURE.
15. TO INSTALL FIBER CONNECTION IN EXISTING FIBER CONDUIT.
16. TO INSTALL FIBER CONNECTION IN EXISTING SIGNAL CABINET/ JUNCTION BOX.

GENERAL NOTES:

1. UTILITY LOCATIONS SHOWN ARE APPROXIMATE AND BASED ON AVAILABLE GIS, FIELD OBSERVATIONS, AND UTILITY LOCATES. CONTRACTOR SHALL VERIFY PRIOR TO CONSTRUCTION.
2. SEWER STRUCTURE DATA AND LOCATIONS SHOWN ARE APPROXIMATE BASED ON AVAILABLE CITY GIS AND AS-BUILT RECORDS. THE CONTRACTOR SHALL CONDUCT PIPE AND SITE VERIFICATION PRIOR TO PROCEEDING WITH CONSTRUCTION.
3. CITY SHALL COORDINATE AND SECURE ANY NECESSARY AGREEMENTS AND/ OR EASEMENT WITH PROPERTY PRIOR TO ANY WORK ON PRIVATE PROPERTY. NO WORK SHALL BE PERFORMED OUTSIDE OF THE RIGHT-OF-WAY WITHOUT PRIOR AUTHORIZATION BY THE ENGINEER.
4. IF DISTURBED, HMA PAVEMENT SECTION SHALL BE REPLACED PER PRE-APPROVED PLAN NO. CK-R.12.

LEGEND:

- PROPOSED CONDUIT INSTALLATION
- PROPOSED FIBER INSTALLATION
- PROPOSED ANTENNA & BASE LOCATION
- PROPOSED REMOVAL/ REPLACEMENT OF SIDEWALK
- EXISTING STRUCTURE
- EXISTING STRUCTURE (HIDDEN)
- SS — EXISTING SANITARY SEWER UTILITY
- EXISTING SANITARY SEWER MANHOLE
- SD — EXISTING STORM DRAIN PIPE
- EXISTING EXISTING STORM DRAIN CATCH BASIN
- W — EXISTING EXISTING WATER PIPE UTILITY
- EXISTING EXISTING WATER METER UTILITY
- EXISTING WATER HYDRANT
- EXISTING WATER VALVE UTILITY
- RoW — EXISTING RIGHT-OF-WAY LINE
- PL — EXISTING EXISTING PROPERTY LINE
- GAS — EXISTING GAS UTILITY
- EXISTING GAS METER UTILITY
- SITE IMAGE REF. SEE NOTE X

811 Know what's below. Call 811 before you dig.

DATE	NO.	REVISION	BY
X/X/X	0	BID SET	

APPROVED BY:

Rob English, PE

DATE: 3/3/2026

Ben Mahony	DESIGNED BY	2/26/2026 DATE
Ben Mahony	DRAWN BY	2/26/2026 DATE
I-Wen Yang, PE	REVIEWED BY	2/26/2026 DATE

CITY OF KIRKLAND
DEPARTMENT OF PUBLIC WORKS
123 FIFTH AVENUE KIRKLAND, WA 98033
(425) 587–3800 www.kirklandwa.gov

SCADA REPLACEMENT

P1 SITE IMPROVEMENTS

REFERENCE SHEET NO. P1_IMP_01

SHEET 81 of 366

PRESSURE STATION P1					
PartID	**Qty**	**Specification**	**Manufacturer Part Number**	**Description**	**Manufacturer**
430A	1	No Equal	IE-3100-8T2C-E	Cisco Catalyst IE3100 Rugged Series - Switch - 8 x 10/100/1000 + 2 x combo Gigabit - DIN rail mountable - PACL, VACL	Cisco
430B	1	No Equal	SD-IE-1GB	Cisco - Flash memory card - 1 GB - SD	Cisco
455A	1	No Equal	cMT3092Xv2	Smart HMI, 9.7", Resolution 1024 x 768, Dark Grey Bezel, 1.6 GHz CPU, 4 GB Flash Memory, 1 GB DRAM, UL Listed, Ethernet, 24VDC	Maple Systems
470A	1	No Equal	MAX-BR1-MINI-LTE-US-T-M-PRM	Peplink MAX BR1 Mini Core LTE - US - No WiFi - No GPS - AC Adapter & 2x SMA Cellular Anetenna Connectors	Peplink
470B	1	No Equal		DC Power Cable ES/GX/MP/RV/LX/IBR	Peplink
470C	1	No Equal	ACW-DIN-BR1-MINI	DIN Rail mount kit	Peplink
471A	2	Or Approved Equal	POLTSX-NFF	Cell Surge Arrestor 0.698-2.7GHz DC Block Coax Protect, N-Female/N-Female connector	PolyPhaser
471B	ASRQ	Or Approved Equal	TIMLMR-400-DB	Watertight LMR400 Cable Black PE Jacket	Times Microwave
471C	ASRQ	Or Approved Equal	R/FCOMP-NM-400	Conn, N-Male Compression Style for Plenum LMR400 Cable	RF Industries
471D	2	Or Approved Equal	ANXTRA6927M3PB-001	3G/4G Multi-Band Phantom Antenna for 698-960/1700-2700 MHz. Black. 3.3" Radome. N Female.	Laird
471E	2	Or Approved Equal	CUSTOM BRACKET	Stainless Steel Custom Bracket - 14"x 02"	Custom

811 Know what's below. Call 811 before you dig.

DATE	NO.	REVISION	BY
X/X/X	0	BID SET	

APPROVED BY:

Rob English, PE

DATE: 3/3/2026

Ben Mahony 2/26/2026
DESIGNED BY DATE

Ben Mahony 2/26/2026
DRAWN BY DATE

I-Wen Yang, PE 2/26/2026
REVIEWED BY DATE

CITY OF KIRKLAND WASHINGTON

CITY OF KIRKLAND
DEPARTMENT OF PUBLIC WORKS
123 FIFTH AVENUE KIRKLAND, WA 98033
(425) 587–3800 www.kirklandwa.gov

SCADA REPLACEMENT

P1 - BILL OF MATERIALS

REFERENCE SHEET NO. P1_BM_01

		PANEL NAME:	P1 CONTROL PANEL															
		PANEL NUMBER:	P1															
TAG Prefix	Loop Desc. 1	Loop Desc. 2	LOOP #	PLC/HMI Tag	DESCRIPTION 1	DESCRIPTION 2	DESCRIPTION 3	FUNCTION	TYPE	Rack	Slot	Point	Units	Min	Max	P&ID Dwg	NOTES
			-		FLOOD			ALARM	DI	1	1	0					
			-		ENCLOSURE	INTRUSION		ALARM	DI	1	1	1					
			-		VAULT	INTRUSION		ALARM	DI	1	1	2					
			-		120VAC POWER			FAIL	DI	1	1	3					
			-		24VDC POWER			FAIL	DI	1	1	4					
			-		Spare				DI	1	1	5					
			-		PHONE PANEL	INTRUSION		ALARM	DI	1	1	6					
			-		Spare				DI	1	1	7					
			-		Spare				DI	1	1	8					
			-		Spare				DI	1	1	9					
			-		Spare				DI	1	1	10					
			-		Spare				DI	1	1	11					
			-		Spare				DI	1	1	12					
			-		Spare				DI	1	1	13					
			-		Spare				DI	1	1	14					
			-		Spare				DI	1	1	15					
			-		PIT-P1	SYSTEM		PRESSURE	AI	1	2	0	PSI	0	150		
			-		Spare				AI	1	2	1					
			-		Spare				AI	1	2	2					
			-		Spare				AI	1	2	3					

811 Know what's below. Call 811 before you dig.

DATE	NO.	REVISION	BY
X/X/X	0	BID SET	

APPROVED BY:

Rob English, PE

DATE: 3/3/2026

Ben Mahony — DESIGNED BY — 2/26/2026 DATE

Ben Mahony — DRAWN BY — 2/26/2026 DATE

I-Wen Yang, PE — REVIEWED BY — 2/26/2026 DATE

CITY OF KIRKLAND WASHINGTON

CITY OF KIRKLAND
DEPARTMENT OF PUBLIC WORKS
123 FIFTH AVENUE KIRKLAND, WA 98033
(425) 587-3800 www.kirklandwa.gov

SCADA REPLACEMENT

P1 - I-O LIST

REFERENCE SHEET NO. P1_IO_01

CONTROL PANEL

NETWORK: 192.168.16.0
MASK: 255.255.255.0
DEFAULT GATEWAY: 192.168.16.1

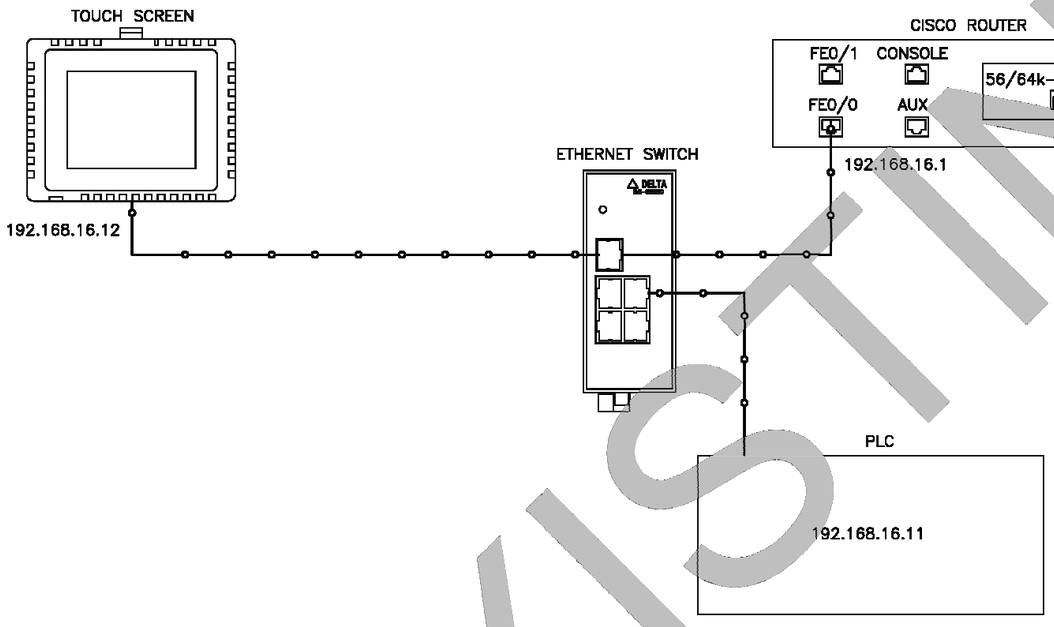

FRAME RELAY BOX

CIRCUIT ID: 86.QEFS.643285..FTNC

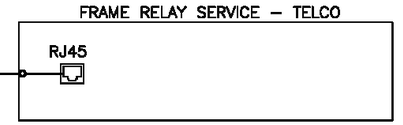

CAT-5e CABLE

EXISTING

DATE	NO.	REVISION	BY
X/X/X	0	BID SET	

APPROVED BY:

Rob English, PE

DATE: 3/3/2026

Ben Mahony — DESIGNED BY — 2/26/2026 DATE
Ben Mahony — DRAWN BY — 2/26/2026 DATE
I-Wen Yang, PE — REVIEWED BY — 2/26/2026 DATE

CITY OF KIRKLAND
DEPARTMENT OF PUBLIC WORKS
123 FIFTH AVENUE KIRKLAND, WA 98033
(425) 587-3800 www.kirklandwa.gov

NETWORK DIAGRAM
SCADA REPLACEMENT
P1 EXISTING CONTROL PANEL (REFERENCE)

REFERENCE SHEET NO.
P1-B01

SHEET 84 of 366

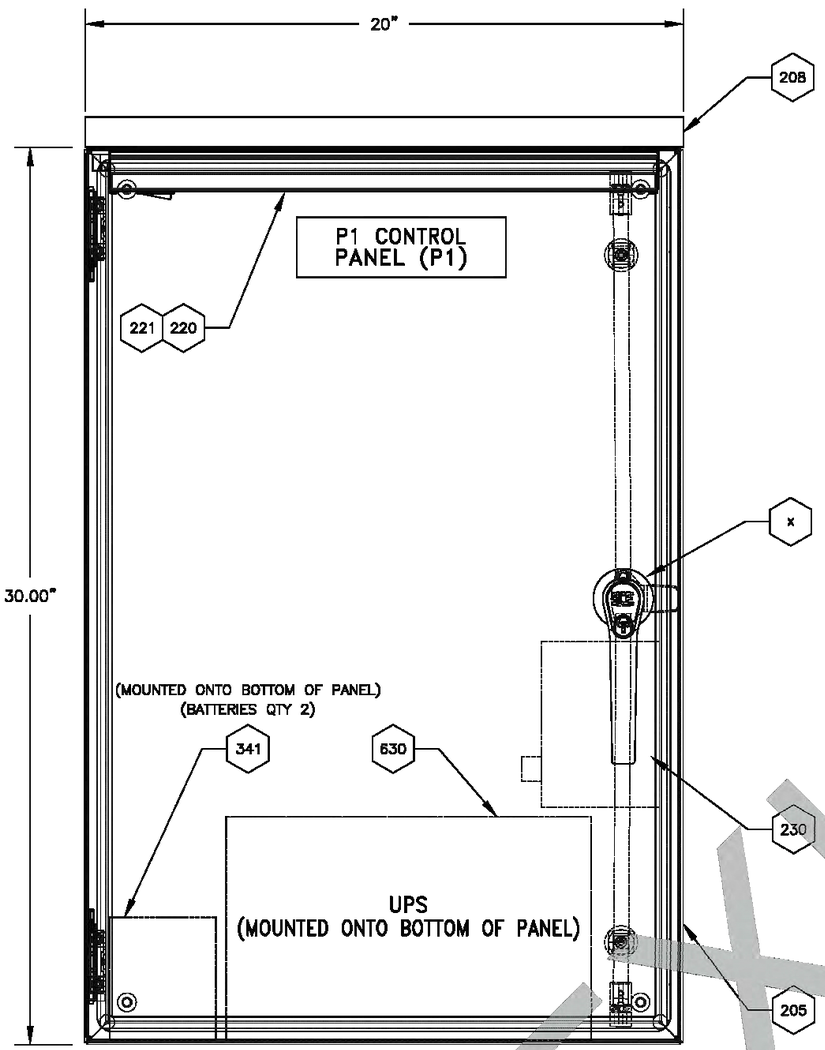

DEPTH OF PANEL = 16"

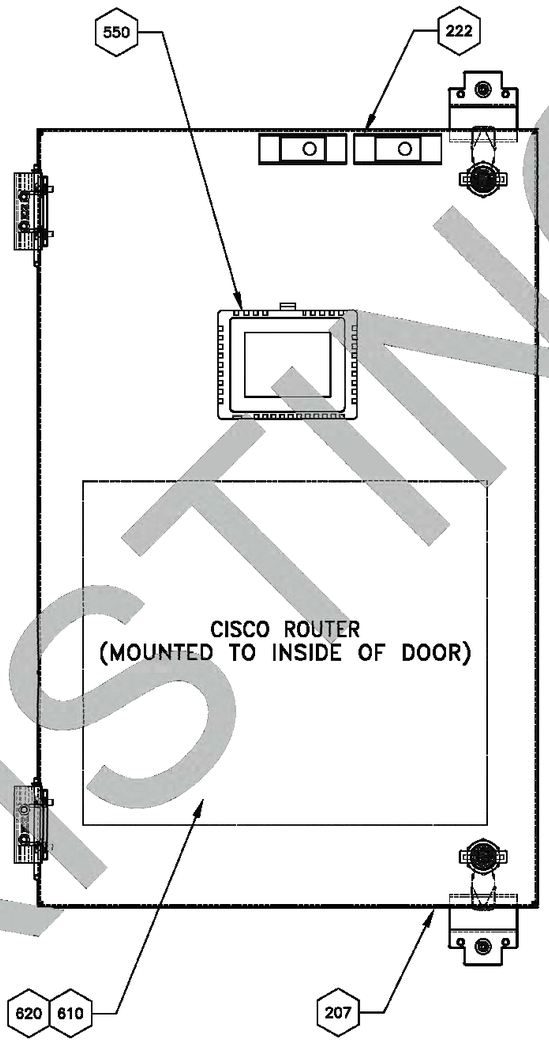

SWINGOUT PANEL

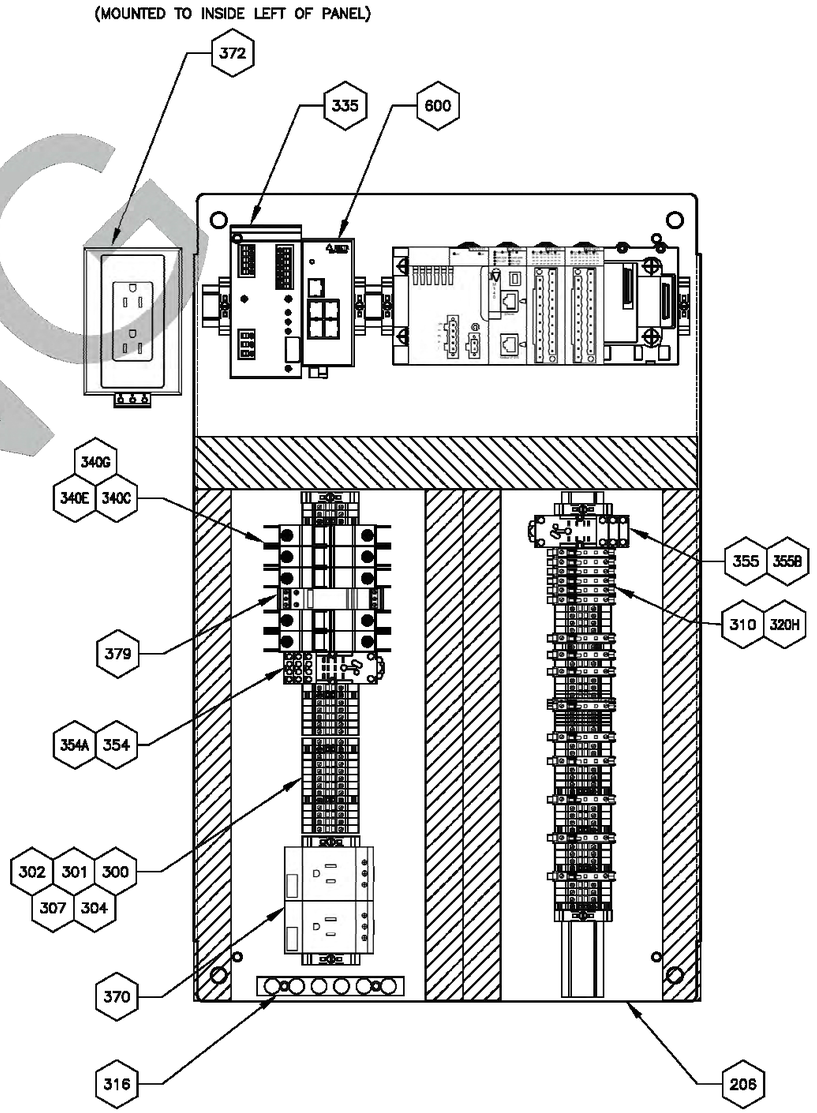

BACKPAN

XXX BOM ITEM NUMBER

EXISTING

X/X/X	0	BID SET		
DATE	NO.	REVISION		BY

APPROVED BY:

Rob English, PE

DATE: 3/3/2026

Ben Mahony	DESIGNED BY	2/26/2026 DATE
Ben Mahony	DRAWN BY	2/26/2026 DATE
I-Wen Yang, PE	REVIEWED BY	2/26/2026 DATE

CITY OF KIRKLAND

DEPARTMENT OF PUBLIC WORKS
123 FIFTH AVENUE KIRKLAND, WA 98033
(425) 587-3800 www.kirklandwa.gov

PANEL LAYOUT

SCADA REPLACEMENT

P1 EXISTING CONTROL PANEL (REFERENCE)

REFERENCE SHEET NO.
P1-J01

SHEET 85 of 366

RACK 1

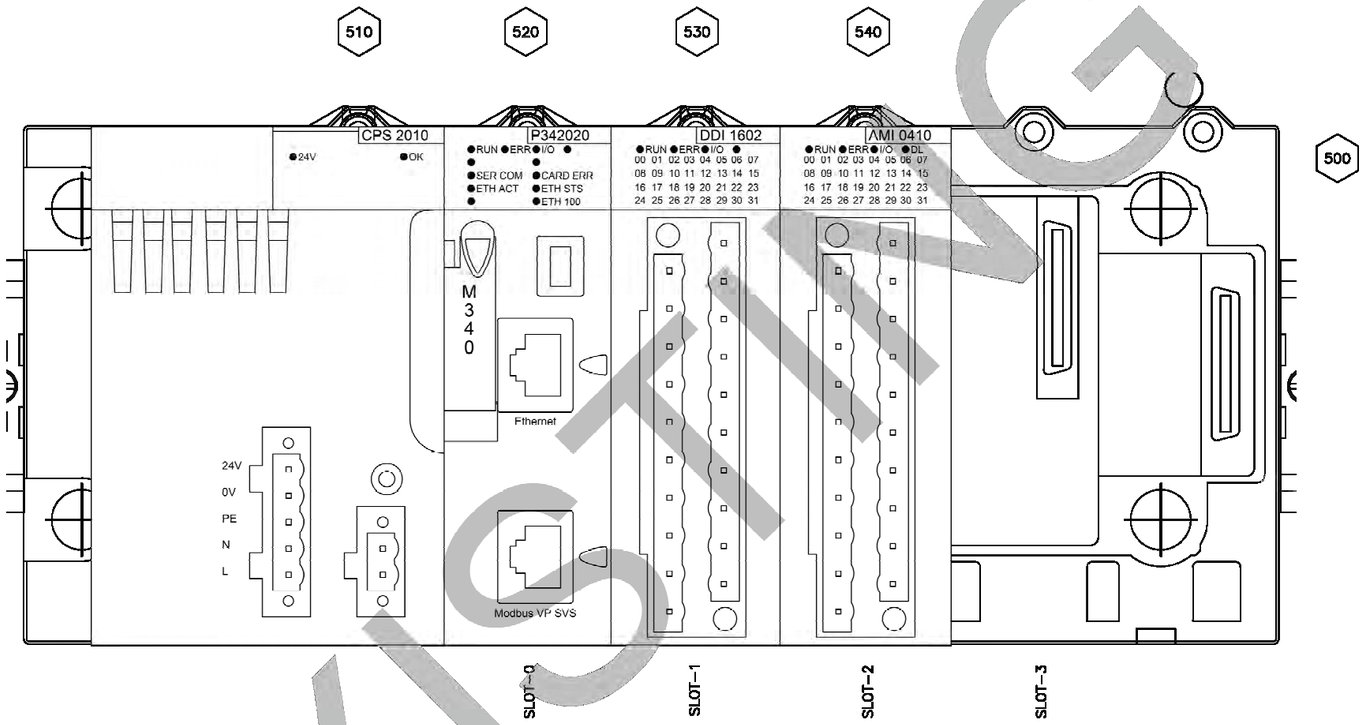

XXX BOM ITEM NUMBER

EXISTING

DATE	NO.	REVISION	BY
X/X/X	0	BID SET	

APPROVED BY:

Rob English, PE

DATE: 3/3/2026

Ben Mahony — DESIGNED BY — 2/26/2026 DATE

Ben Mahony — DRAWN BY — 2/26/2026 DATE

I-Wen Yang, PE — REVIEWED BY — 2/26/2026 DATE

CITY OF KIRKLAND

DEPARTMENT OF PUBLIC WORKS
123 FIFTH AVENUE KIRKLAND, WA 98033
(425) 587-3800 www.kirklandwa.gov

PLC DETAIL

SCADA REPLACEMENT

P1 EXISTING CONTROL PANEL (REFERENCE)

REFERENCE SHEET NO. P1-J02

SHEET 86 of 366

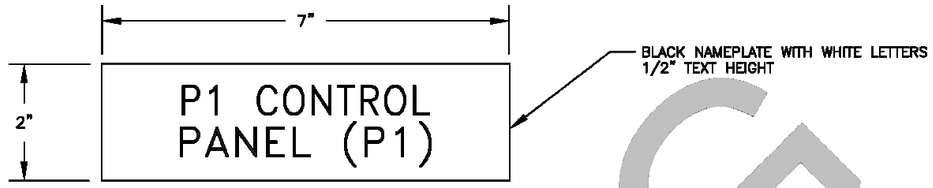

EXISTING

XXX BOM ITEM NUMBER

DATE	NO.	REVISION	BY
X/X/X	0	BID SET	

Know what's below. Call 811 before you dig.

APPROVED BY:

Rob English, PE

DATE: 3/3/2026

Ben Mahony DESIGNED BY 2/26/2026 DATE

Ben Mahony DRAWN BY 2/26/2026 DATE

I-Wen Yang, PE REVIEWED BY 2/26/2026 DATE

CITY OF KIRKLAND

DEPARTMENT OF PUBLIC WORKS
123 FIFTH AVENUE KIRKLAND, WA 98033
(425) 587-3800 www.kirklandwa.gov

NAMEPLATE DETAIL

SCADA REPLACEMENT

P1 EXISTING CONTROL PANEL (REFERENCE)

REFERENCE SHEET NO.
P1-J03

SHEET 87 of 366

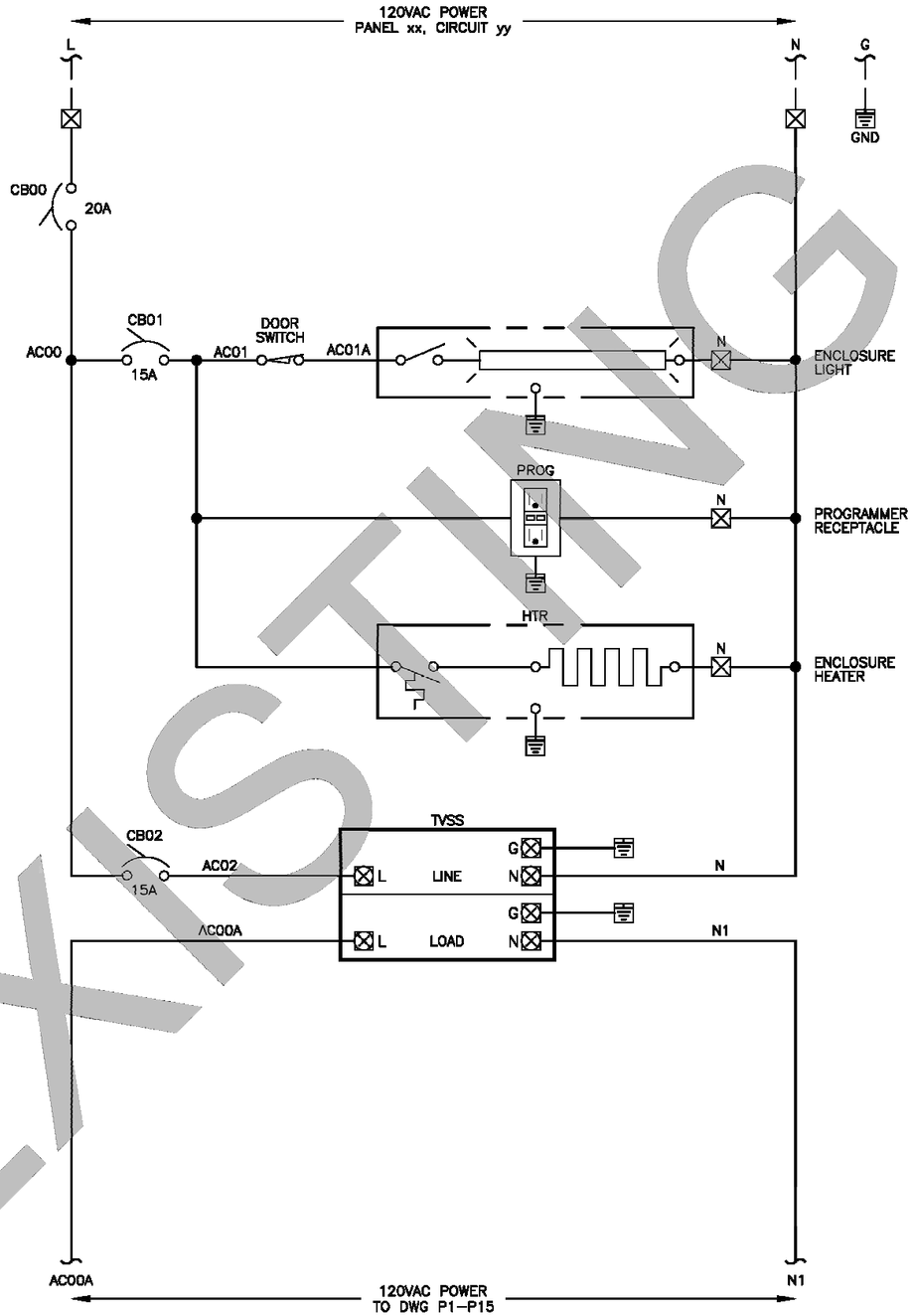

EXISTING

NO.	DATE	REVISION	BY
0	X/X/X	BID SET	

APPROVED BY:

Rob English, PE

DATE: 3/3/2026

Ben Mahony — DESIGNED BY — 2/26/2026 DATE

Ben Mahony — DRAWN BY — 2/26/2026 DATE

I-Wen Yang, PE — REVIEWED BY — 2/26/2026 DATE

CITY OF KIRKLAND

DEPARTMENT OF PUBLIC WORKS
123 FIFTH AVENUE KIRKLAND, WA 98033
(425) 587-3800 www.kirklandwa.gov

120VAC POWER DISTRIBTUTION DIAGRAM

SCADA REPLACEMENT

P1 EXISTING CONTROL PANEL (REFERENCE)

REFERENCE SHEET NO.
P1-P10

SHEET 88 of 366

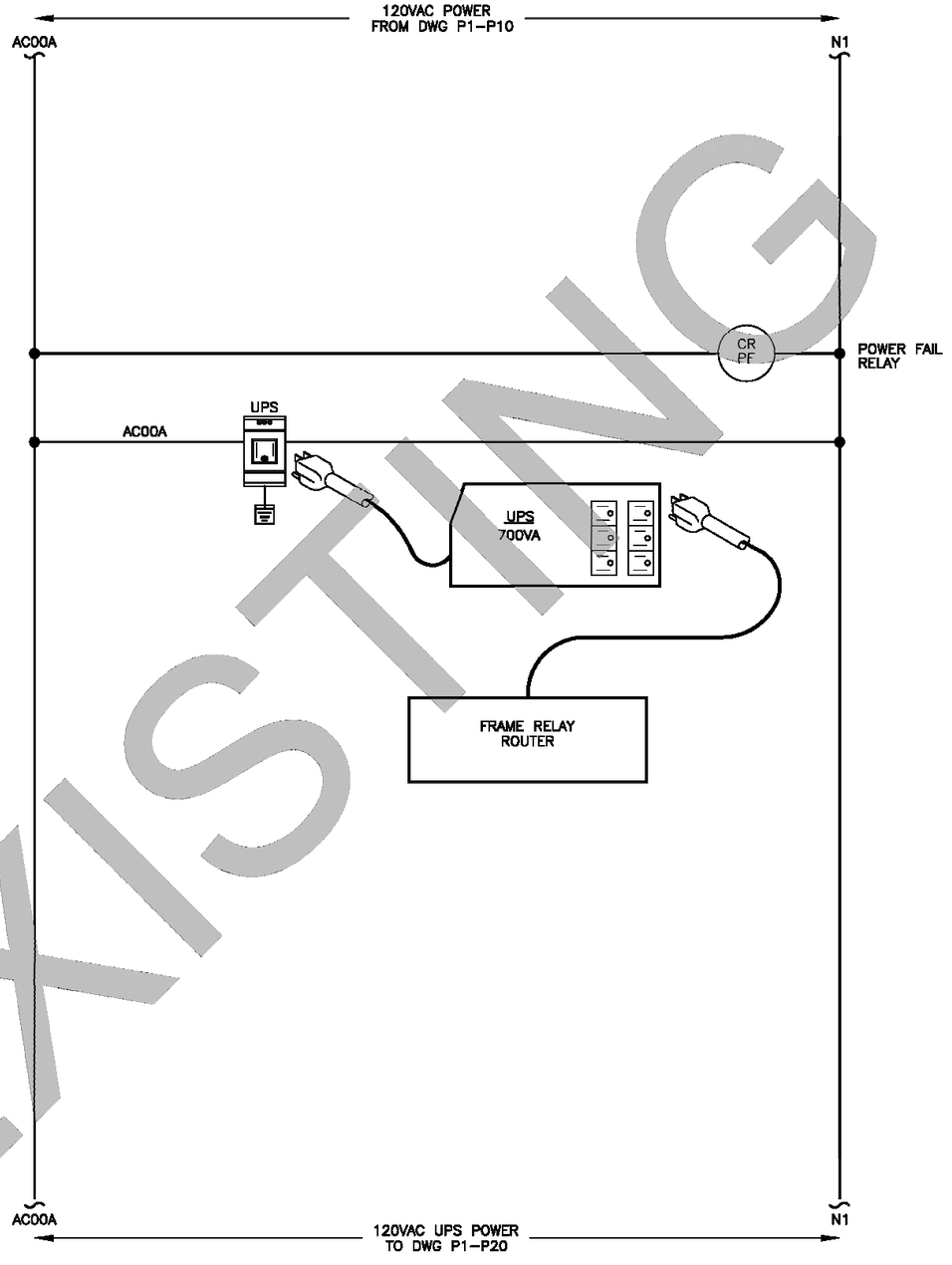

EXISTING

Know what's below. Call 811 before you dig.

DATE	NO.	REVISION	BY
X/X/X	0	BID SET	

APPROVED BY:

Rob English, PE

DATE: 3/3/2026

Ben Mahony 2/26/2026
DESIGNED BY DATE

Ben Mahony 2/26/2026
DRAWN BY DATE

I-Wen Yang, PE 2/26/2026
REVIEWED BY DATE

CITY OF KIRKLAND

DEPARTMENT OF PUBLIC WORKS
123 FIFTH AVENUE KIRKLAND, WA 98033
(425) 587-3800 www.kirklandwa.gov

120VAC UPS POWER DISTRIBTION DIAGRAM

SCADA REPLACEMENT

P1 EXISTING CONTROL PANEL (REFERENCE)

REFERENCE SHEET NO.
P1-P15

SHEET 89 of 366

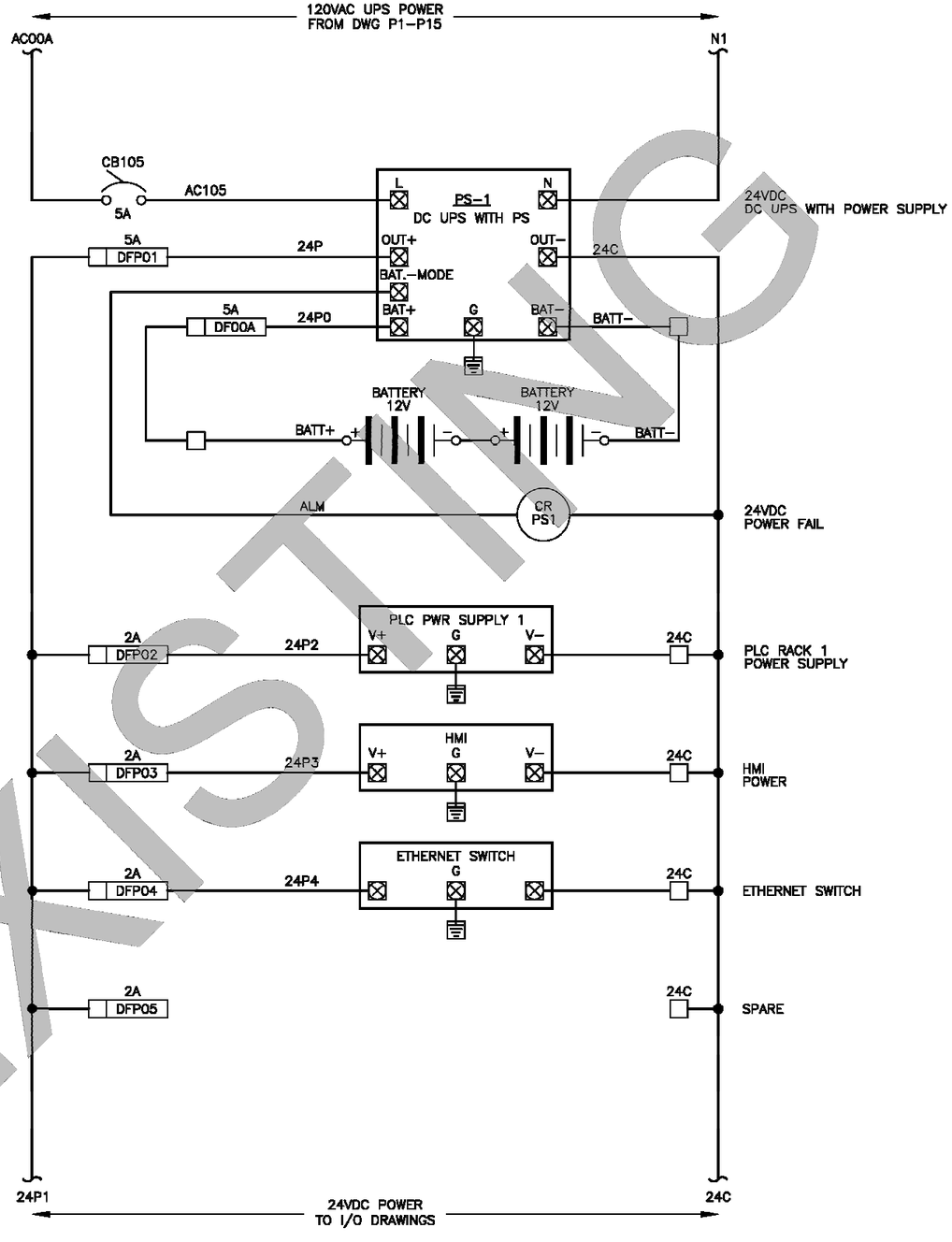

EXISTING

Know what's below. Call 811 before you dig.

DATE	NO.	REVISION	BY
X/X/X	0	BID SET	

APPROVED BY:

Rob English, PE

DATE: 3/3/2026

Ben Mahony — DESIGNED BY — 2/26/2026 DATE

Ben Mahony — DRAWN BY — 2/26/2026 DATE

I-Wen Yang, PE — REVIEWED BY — 2/26/2026 DATE

CITY OF KIRKLAND

DEPARTMENT OF PUBLIC WORKS
123 FIFTH AVENUE KIRKLAND, WA 98033
(425) 587–3800 www.kirklandwa.gov

24VDC POWER DISTRIBTITION DIAGRAM

SCADA REPLACEMENT

P1 EXISTING CONTROL PANEL (REFERENCE)

REFERENCE SHEET NO.
P1-P20

SHEET 90 of 366

FIELD

CONTROL PANEL

FRAME RELAY ENCLOSURE

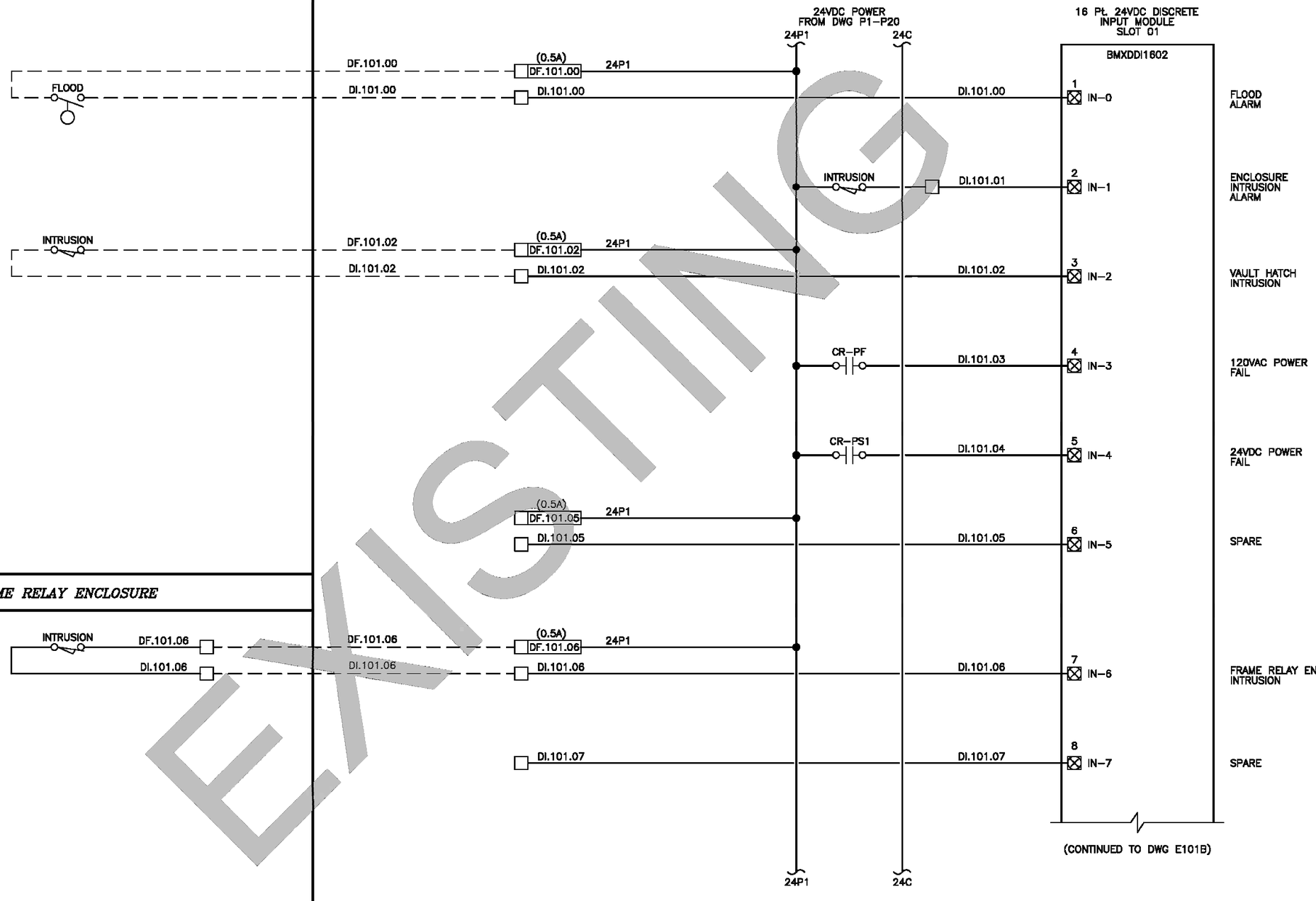

EXISTING

DATE	NO.	REVISION	BY
X/X/X	0	BID SET	

APPROVED BY:

Rob English, PE

DATE: 3/3/2026

Ben Mahony — DESIGNED BY — 2/26/2026 DATE

Ben Mahony — DRAWN BY — 2/26/2026 DATE

I-Wen Yang, PE — REVIEWED BY — 2/26/2026 DATE

CITY OF KIRKLAND

DEPARTMENT OF PUBLIC WORKS
123 FIFTH AVENUE KIRKLAND, WA 98033
(425) 587-3800 www.kirklandwa.gov

DISCRETE INPUT MODULE, SLOT 01 - WIRING DIAGRAM (1)

SCADA REPLACEMENT

P1 EXISTING CONTROL PANEL (REFERENCE)

REFERENCE SHEET NO.
P1-E101A

SHEET 91 of 366

Know what's below. Call 811 before you dig.

FIELD	CONTROL PANEL

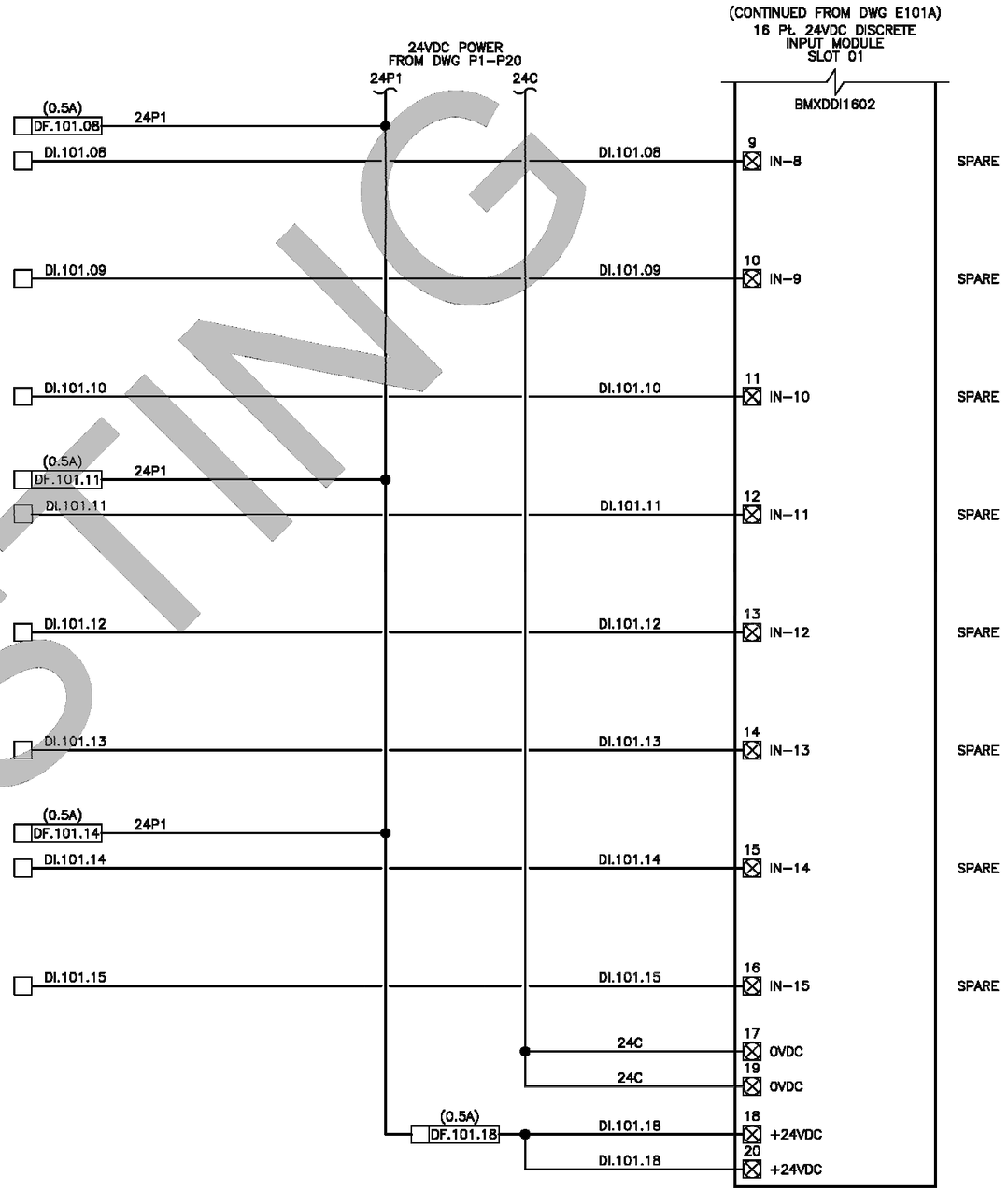

EXISTING

DATE	NO.	REVISION	BY
X/X/X	0	BID SET	

APPROVED BY:

Rob English, PE

DATE: 3/3/2026

Ben Mahony — DESIGNED BY — 2/26/2026 DATE

Ben Mahony — DRAWN BY — 2/26/2026 DATE

I-Wen Yang, PE — REVIEWED BY — 2/26/2026 DATE

CITY OF KIRKLAND

DEPARTMENT OF PUBLIC WORKS
123 FIFTH AVENUE KIRKLAND, WA 98033
(425) 587-3800 www.kirklandwa.gov

DISCRETE INPUT MODULE, SLOT 01 - WIRING DIAGRAM (2)

SCADA REPLACEMENT

P1 EXISTING CONTROL PANEL (REFERENCE)

REFERENCE SHEET NO.
P1-E101B

SHEET 92 of 366

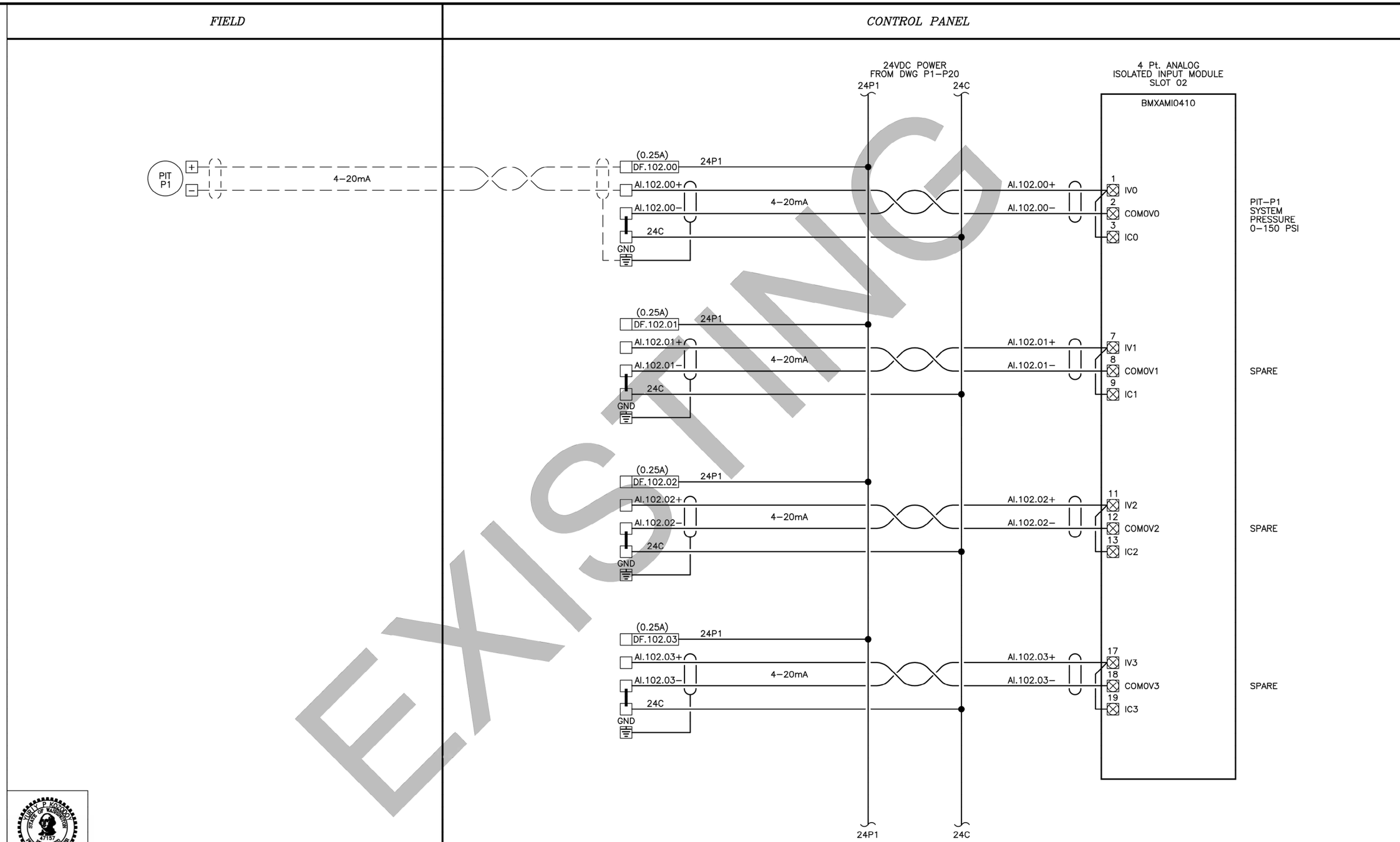

DATE	NO.	REVISION	BY
X/X/X	0	BID SET	

Know what's below. Call 811 before you dig.

APPROVED BY:

Rob English, PE

DATE: 3/3/2026

Ben Mahony — DESIGNED BY — 2/26/2026 DATE

Ben Mahony — DRAWN BY — 2/26/2026 DATE

I-Wen Yang, PE — REVIEWED BY — 2/26/2026 DATE

CITY OF KIRKLAND WASHINGTON

CITY OF KIRKLAND
DEPARTMENT OF PUBLIC WORKS
123 FIFTH AVENUE KIRKLAND, WA 98033
(425) 587-3800 www.kirklandwa.gov

ANALOG INPUT MODULE, SLOT 02 - WIRING DIAGRAM

SCADA REPLACEMENT

P1 EXISTING CONTROL PANEL (REFERENCE)

REFERENCE SHEET NO. P1-E102

SHEET 93 of 366

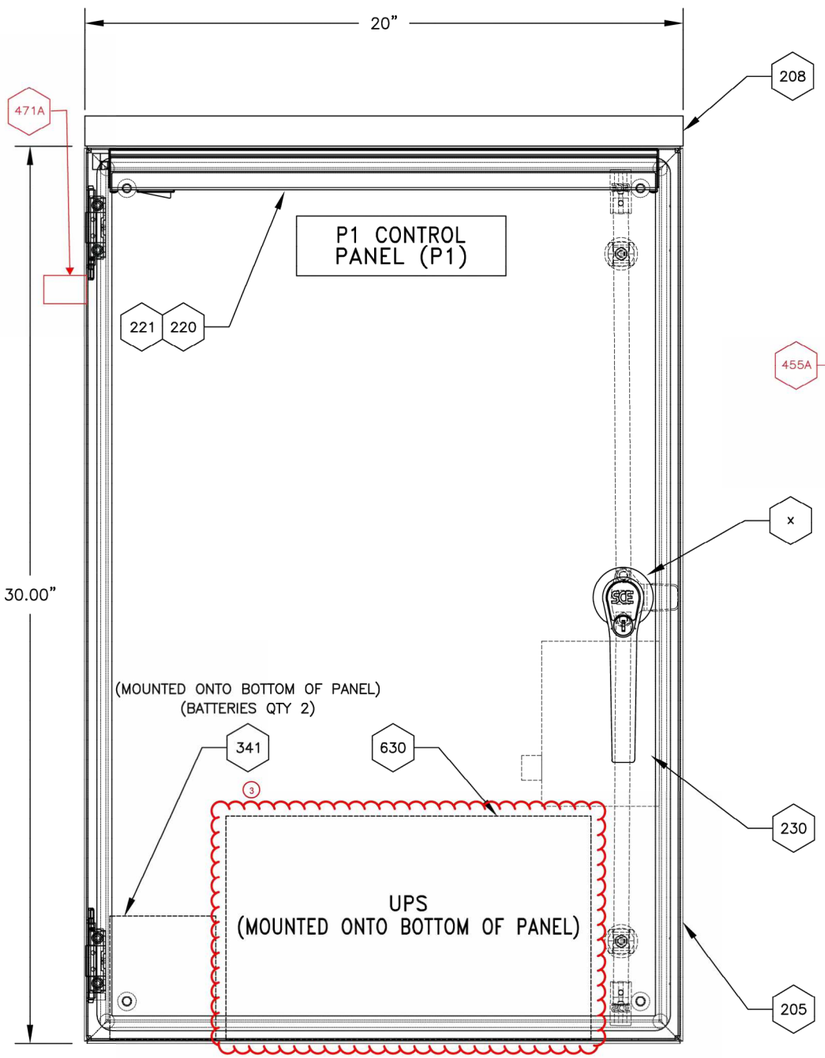

DEPTH OF PANEL = 16"

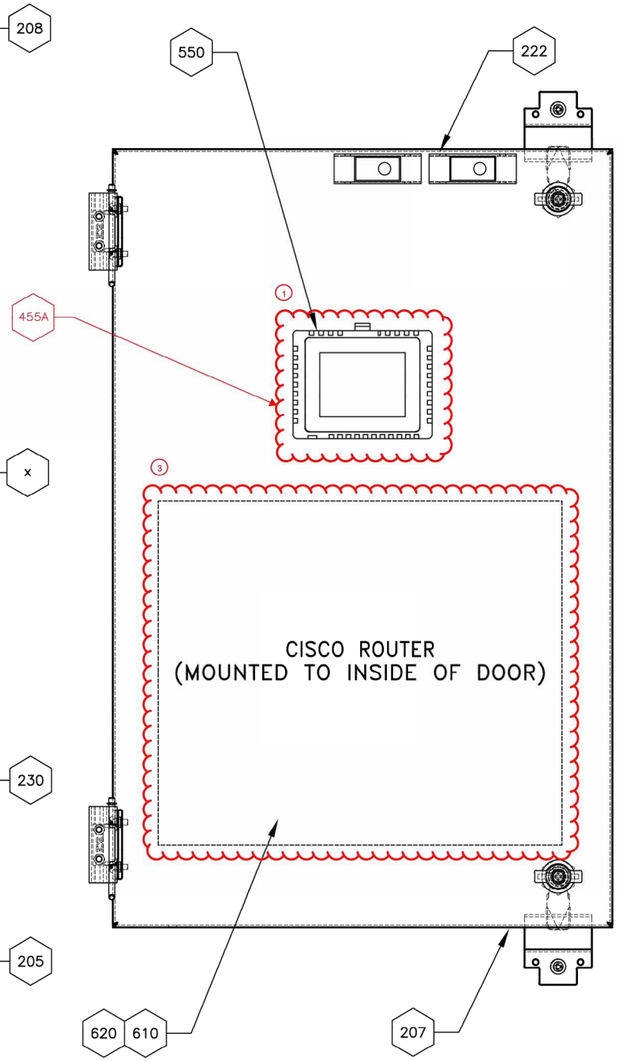

SWINGOUT PANEL

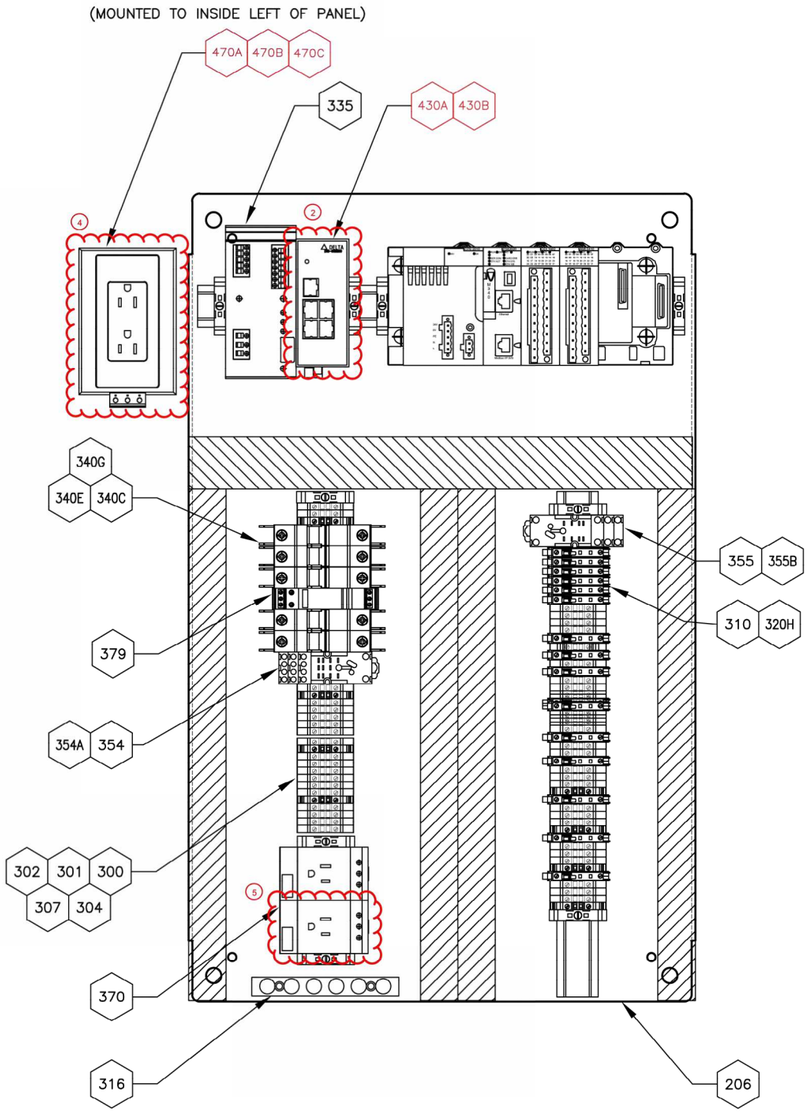

BACKPAN

NOTES:
1. REMOVE EXISTING OIT AND REPLACE WITH NEW MAPLE SYSTEMS OIT (PART#cMT3092Xv2)
2. REMOVE EXISTING ETHERNET SWITCH AND REPLACE WITH NEW CISCO SWITCH (PART# IE-3100-8T2C-E)
3. REMOVE AND RETURN TO CITY AS NO LONGER NEEDED.
4. REMOVE OUTLET AND MOUNT NEW PEPLINK RADIO
5. REPURPOSE OUTLET AND REWIRE AS NEW "PROGRAMMING OUTLET"

XXX BOM ITEM NUMBER

Know what's below. Call 811 before you dig.

DATE	NO.	REVISION	BY
X/X/X	0	BID SET	

APPROVED BY:

Rob English, PE

DATE: 3/3/2026

Ben Mahony (DESIGNED BY)	2/26/2026 (DATE)	
Ben Mahony (DRAWN BY)	2/26/2026 (DATE)	
I-Wen Yang, PE (REVIEWED BY)	2/26/2026 (DATE)	

CITY OF KIRKLAND
DEPARTMENT OF PUBLIC WORKS
123 FIFTH AVENUE KIRKLAND, WA 98033
(425) 587-3800 www.kirklandwa.gov

PANEL LAYOUT
SCADA REPLACEMENT

P1 CONTROL PANEL (P1)

REFERENCE SHEET NO.
P1-J01

SHEET 94 of 366

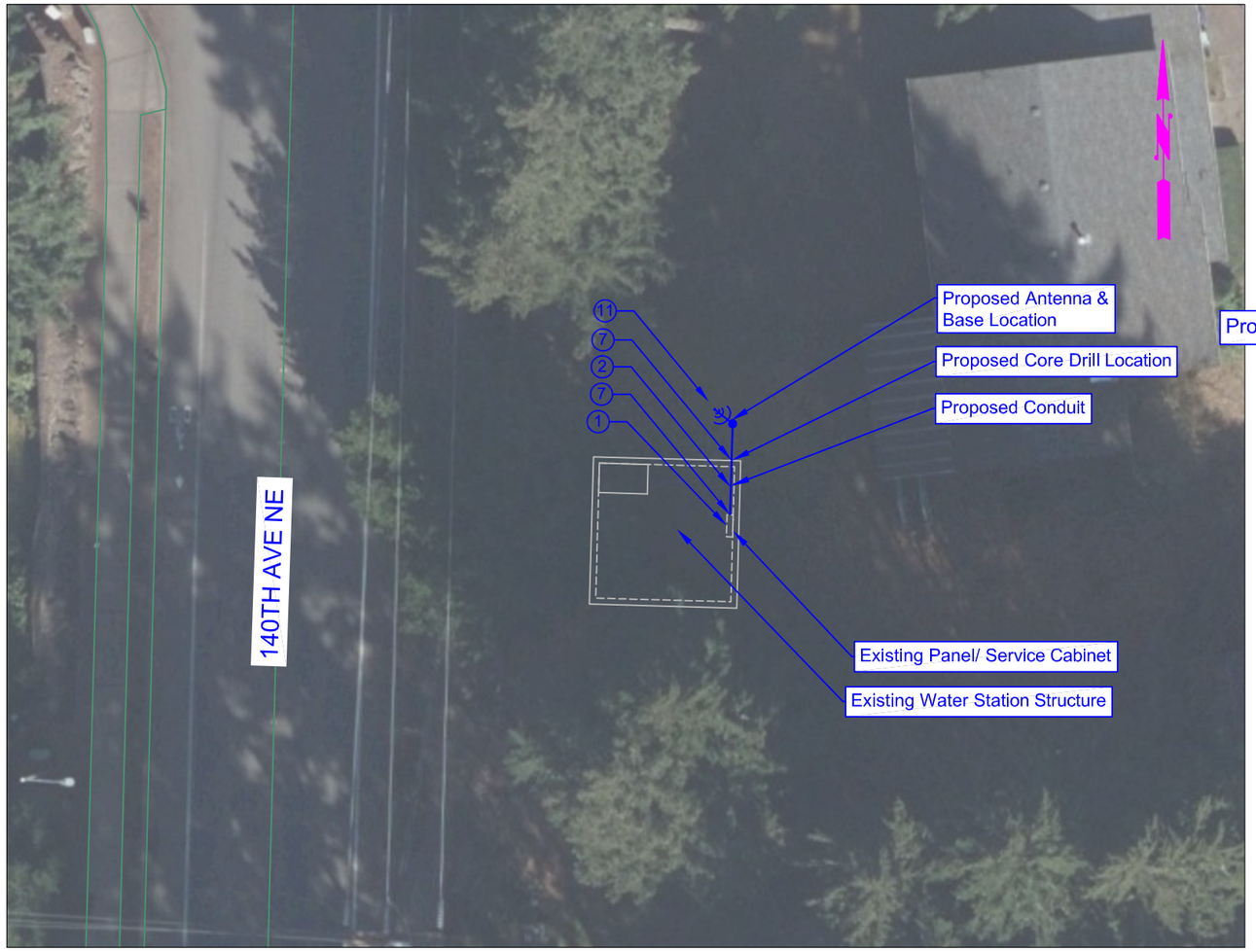

SITE: S1
UTILITY: Water
PROJECT ADDRESS: NE 69th and 140th Ave NE

20 10 0 20 40

GIS DISCLAIMER:
The as-built and utility information shown in the project plans are based on the City of Kirkland's available GIS information. Thus, the contractor shall field verify all of the proposed conditions and limits. Additionally, the contractor shall call for utility locates at least 48 hours prior to any trenching or excavation work to field verify that no utility conflicts exist with the proposed excavation limits.

A NORTH-EAST VIEW
NOT TO SCALE

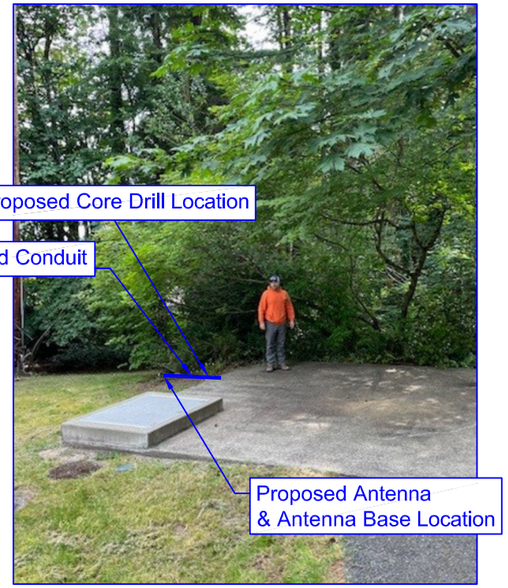

B NORTH VIEW
NOT TO SCALE

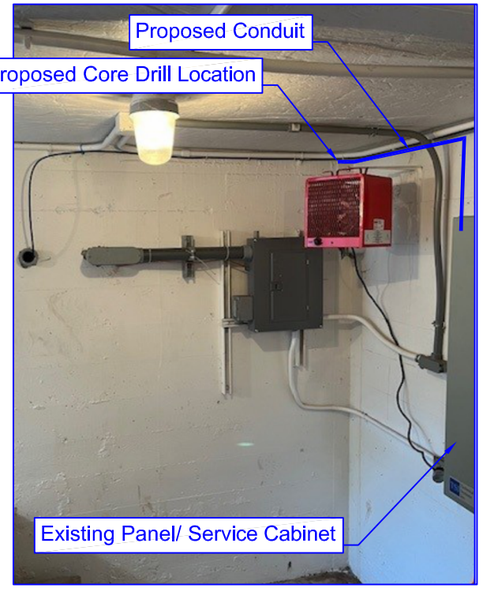

CONSTRUCTION NOTES:

1. TO REPLACE PANEL AND UPDATE THE SOFTWARE IN THE SERVICE CABINET PER THE SITE-SPECIFIC BILL OF MATERIALS (BOM'S).
2. TO INSTALL 4-INCH SCH. 40 CONDUIT PIPING AND REPLACE BACKFILL WITH NATIVE SOILS, IN KIND.
3. TO PROTECT EXISTING BURIED UTILITY, SEE GENERAL NOTE 1.
4. TO PROTECT EXISTING BURIED POWER AND/ OR FRANCHISE UTILITY, SEE GENERAL NOTE 1.
5. TO INSTALL FIBER CABLE THROUGH EXISTING FIBER CONDUIT.
6. TO REMOVE AND REPLACE CONCRETE SIDEWALK.
7. TO CORE-DRILL HOLE(S) INTO EXISTING STRUCTURE AND/ OR EXISTING SERVICE CABINET.
8. TO INSTALL EXTERNAL MOUNTED LOW-PROFILE (4 FT HIGH POLE HEIGHT) ANTENNA PER ANTENNA STANDARD DETAIL.
9. TO INSTALL EXTERNAL MOUNTED HIGH-PROFILE (20 FT HIGH POLE HEIGHT) ANTENNA PER ANTENNA STANDARD DETAIL.
10. TO INSTALL INTERNAL PANEL-MOUNTED LOW-PROFILE (2 FT HIGH POLE HEIGHT) ANTENNA PER ANTENNA STANDARD DETAIL.
11. TO INSTALL FULL-PROFILE (20 FT HIGH POLE HEIGHT) ANTENNA WITH A CONCRETE ANCHOR PER ANTENNA AND ANTENNA BASE STANDARD DETAIL.
12. TO SALVAGE AND REUSE EXISTING ANTENNA STRUCTURE AND INSTALL PROPOSED ANTENNA EQUIPMENT.
13. TO REMOVE EXISTING YAGI ANTENNA ON THE EXISTING ANTENNA POLE STRUCTURE.
14. TO INSTALL NEMA 4X ENCLOSURE ON PROPOSED OR EXISTING ANTENNA POLE STRUCTURE WITH THE NEW MODEM INSIDE THE ENCLOSURE.
15. TO INSTALL FIBER CONNECTION IN EXISTING FIBER CONDUIT.
16. TO INSTALL FIBER CONNECTION IN EXISTING SIGNAL CABINET/ JUNCTION BOX.

GENERAL NOTES:

1. UTILITY LOCATIONS SHOWN ARE APPROXIMATE AND BASED ON AVAILABLE GIS, FIELD OBSERVATIONS, AND UTILITY LOCATES. CONTRACTOR SHALL VERIFY PRIOR TO CONSTRUCTION.
2. SEWER STRUCTURE DATA AND LOCATIONS SHOWN ARE APPROXIMATE BASED ON AVAILABLE CITY GIS AND AS-BUILT RECORDS. THE CONTRACTOR SHALL CONDUCT PIPE AND SITE VERIFICATION PRIOR TO PROCEEDING WITH CONSTRUCTION.
3. CITY SHALL COORDINATE AND SECURE ANY NECESSARY AGREEMENTS AND/ OR EASEMENT WITH PROPERTY PRIOR TO ANY WORK ON PRIVATE PROPERTY. NO WORK SHALL BE PERFORMED OUTSIDE OF THE RIGHT-OF-WAY WITHOUT PRIOR AUTHORIZATION BY THE ENGINEER.
4. IF DISTURBED, HMA PAVEMENT SECTION SHALL BE REPLACED PER PRE-APPROVED PLAN NO. CK-R.12.

LEGEND:

- PROPOSED CONDUIT INSTALLATION
- PROPOSED FIBER INSTALLATION
- PROPOSED ANTENNA & BASE LOCATION
- PROPOSED REMOVAL/ REPLACEMENT OF SIDEWALK
- EXISTING STRUCTURE
- EXISTING STRUCTURE (HIDDEN)
- SS — EXISTING SANITARY SEWER UTILITY
- EXISTING SANITARY SEWER MANHOLE
- SD — EXISTING STORM DRAIN PIPE
- EXISTING EXISTING STORM DRAIN CATCH BASIN
- W — EXISTING EXISTING WATER PIPE UTILITY
- EXISTING EXISTING WATER METER UTILITY
- EXISTING WATER HYDRANT
- EXISTING WATER VALVE UTILITY
- RoW — EXISTING RIGHT-OF-WAY LINE
- PL — EXISTING EXISTING PROPERTY LINE
- GAS — EXISTING GAS UTILITY
- EXISTING GAS METER UTILITY
- X — SITE IMAGE REF. SEE NOTE X

Know what's below. Call 811 before you dig.

DATE	NO.	REVISION	BY
X/X/X	0	BID SET	

APPROVED BY:

Rob English, PE

DATE: 3/3/2026

Ben Mahony — DESIGNED BY — 2/26/2026 DATE
Ben Mahony — DRAWN BY — 2/26/2026 DATE
I-Wen Yang, PE — REVIEWED BY — 2/26/2026 DATE

CITY OF KIRKLAND
DEPARTMENT OF PUBLIC WORKS
123 FIFTH AVENUE KIRKLAND, WA 98033
(425) 587-3800 www.kirklandwa.gov

SCADA REPLACEMENT

S1 SITE IMPROVEMENTS

REFERENCE SHEET NO. S1_IMP_01

SHEET 95 of 366

SUPPLY STATION - S1 - RTU					
PartID	Qty	Specification	Manufacturer Part Number	Description	Manufacturer
117G	1	No Equal	CP3630	Concept Enclosure Backpan, Painted Mild Steel, 34.20" x 28.20"	Hoffman
143B	1	Or Approved Equal	111019-00	Temperature Control Switch, N.O. Contact for fan control or high temperature alarm, Adjustable Set Point Range 32-140 deg.F, 15-amp rated contact at 120VAC	Stego
200B	ASRQ	Or Approved Equal	3044102	Terminal Block, UT4, Gray, 26-10 AWG, 600V, 32A	Phoenix Contact
202A	ASRQ	Or Approved Equal	3047028	Terminal Block End Barrier, UT2.5/10 Terminals	Phoenix Contact
203A	ASRQ	Or Approved Equal	0800886	Terminal Block End Clamp, 9.5mm Wide	Phoenix Contact
210A	ASRQ	Or Approved Equal	1492-WFB424	Fuse Terminal Block, 5x20mm Fuse, Black, Red LED Indicator, 30-12 AWG, 15A @ 10-57VAC/VDC	Allen-Bradley
221A	ASRQ	Or Approved Equal	S500-250-R	Fuse, 0.25 A, Glass Body, 5x20mm, Fast Acting, 250VAC/60VDC	Bussmann
221B	ASRQ	Or Approved Equal	S500-500-R	Fuse, 0.5 A, Glass Body, 5x20mm, Fast Acting, 250VAC/60VDC	Bussmann
221D	ASRQ	Or Approved Equal	S500-2-R	Fuse, 2 A, Glass Body, 5x20mm, Fast Acting, 250VAC/60VDC	Bussmann
241C	ASRQ	Or Approved Equal	1489-M1C050	Miniature Circuit Breaker, 1-Pole, 5A, Din Rail Mount, 277VAC/48VDC Max, Trip Curve C, 10kA, UL 489 Listed	Allen-Bradley
241E	ASRQ	Or Approved Equal	1489-M1C100	Miniature Circuit Breaker, 1-Pole, 10A, Din Rail Mount, 277VAC/48VDC Max, Trip Curve C, 10kA, UL 489 Listed	Allen-Bradley
241H	ASRQ	Or Approved Equal	1489-M1C200	Miniature Circuit Breaker, 1-Pole, 20A, Din Rail Mount, 277VAC/48VDC Max, Trip Curve C, 10kA, UL 489 Listed	Allen-Bradley
241K	ASRQ	Or Approved Equal	1489-M1C300	Miniature Circuit Breaker, 1-Pole, 30A, Din Rail Mount, 277VAC/48VDC Max, Trip Curve C, 10kA, UL 489 Listed	Allen-Bradley
245A	1	Or Approved Equal	2907918	Surge Arrester, Pluggable Type, 150VAC/DC, 26A (20A for UL Applications)	Phoenix Contact
260A	1	Or Approved Equal	UGB2/0-414-6	Ground Bus Bar, Tin Plated Copper, 5" x 5/8", 14 - 4 AWG, 6-port	Panduit
290A	1	Or Approved Equal	2907161	UPS with integrated power supply, USB (Modbus/RTU), DIN rail mounting, Push-in connection, input: 1-phase, output: 24 V DC / 10 A	Phoenix Contact
290B	1	Or Approved Equal	1348516	Energy storage, VRLA-AGM, 24 V DC, 20 Ah, automatic detection and communication with QUINT UPS-IQ	Phoenix Contact
307B	ASRQ	Or Approved Equal	700-HK32Z24-4	Slim Line Control Relay, DPDT, 8A Contacts, 24 VDC Coil, Pilot Light	Allen-Bradley
307C	ASRQ	Or Approved Equal	700-HK32A1-4	Slim Line Control Relay, DPDT, 8A Contacts, 120 VAC Coil, Pilot Light	Allen-Bradley
307D	ASRQ	Or Approved Equal	700-HN122	Slim Line Control Relay Base, Mini 8-Blade Base Socket, Screw Terminals	Allen-Bradley
320A	1	Or Approved Equal	0804155	Receptacle, 15A/125VAC, DIN rail mounting, simplex	Phoenix Contact
322A	1	Or Approved Equal	5600462	Receptacle, GFCI, 15A/125VAC, DIN rail mounting, duplex	Phoenix Contact
430A	1	No Equal	IE-3100-8T2C-E	Cisco Catalyst IE3100 Rugged Series - Switch - 8 x 10/100/1000 + 2 x combo Gigabit - DIN rail mountable - PACL, VACL	Cisco
430B	1	No Equal	SD-IE-1GB	Cisco - Flash memory card - 1 GB - SD	Cisco
455A	1	No Equal	cMT3092Xv2	Smart HMI, 9.7", Resolution 1024 x 768, Dark Grey Bezel, 1.6 GHz CPU, 4 GB Flash Memory, 1 GB DRAM, UL Listed, Ethernet, 24VDC	Maple Systems
470A	1	No Equal	MAX-BR1-MINI-LTE-US-T-M-PRM	Peplink MAX BR1 Mini Core LTE - US - No WiFi - No GPS - AC Adapter & 2x SMA Cellular Anetenna Connectors	Peplink
470B	1	No Equal		DC Power Cable ES/GX/MP/RV/LX/IBR	Peplink
470C	1	No Equal	ACW-DIN-BR1-MINI	DIN Rail mount kit	Peplink
471A	2	Or Approved Equal	POLTSX-NFF	Cell Surge Arrestor 0.698-2.7GHz DC Block Coax Protect, N-Female/N-Female connector	PolyPhaser
471B	ASRQ	Or Approved Equal	TIMLMR-400-DB	Watertight LMR400 Cable Black PE Jacket	Times Microwave
471C	ASRQ	Or Approved Equal	R/FCOMP-NM-400	Conn, N-Male Compression Style for Plenum LMR400 Cable	RF Industries
471D	2	Or Approved Equal	ANXTRA6927M3PB-001	3G/4G Multi-Band Phantom Antenna for 698-960/1700-2700 MHz. Black. 3.3" Radome. N Female.	Laird
471E	2	Or Approved Equal	CUSTOM BRACKET	Stainless Steel Custom Bracket - 14"x 02"	Custom
610D	1	No Equal	BMXP342020	Modicon M340 PLC Processor, 1 Modbus Serial Port, 1 Ethernet Port, Max 1024 Discrete & 256 Analog IO	Schneider Electric
611B	1	No Equal	BMXXBP0600	Modicon X80 I/O Platform X-Bus Rack, 6 Slots	Schneider Electric
612A	1	No Equal	BMXCPS2010	Modicon X80 I/O Platform Power Supply, 17W Output, 24 VDC	Schneider Electric
614B	1	No Equal	BMXDDI1602	Modicon X80 Discrete Input Card, 16 Points, 24 VDC	Schneider Electric
615E	1	No Equal	BMXDRA1605	Modicon X80 Relay Output Card, 16 Points, 24 VDC / 24-240 VAC, 2A Max	Schneider Electric
616C	1	No Equal	BMXAMI0810	Modicon X80 Analog Input Module, 8 Points, Voltage/Current, Isolated	Schneider Electric
619C	1	No Equal	BMXFTB2010	Modicon X80 Removable Terminal Block, 20-Way, Screw Terminals	Schneider Electric
619E	2	No Equal	BMXFTB2800	Modicon X80 Removable Terminal Block, 28-Way, Screw Terminals	Schneider Electric

811 Know what's below. Call 811 before you dig.

DATE	NO.	REVISION	BY
X/X/X	0	BID SET	

APPROVED BY:

Rob English, PE

DATE: 3/3/2026

Ben Mahony	DESIGNED BY	2/26/2026 DATE
Ben Mahony	DRAWN BY	2/26/2026 DATE
I-Wen Yang, PE	REVIEWED BY	2/26/2026 DATE

CITY OF KIRKLAND WASHINGTON

CITY OF KIRKLAND
DEPARTMENT OF PUBLIC WORKS
123 FIFTH AVENUE KIRKLAND, WA 98033
(425) 587–3800 www.kirklandwa.gov

SCADA REPLACEMENT

S1 - BILL OF MATERIALS

REFERENCE SHEET NO. S1_BM_01

		PANEL NAME:	SUPPLY STATION 1 RTU															
		PANEL NUMBER:	S1															
TAG Prefix	Loop Desc. 1	Loop Desc. 2	LOOP #	PLC/HMI Tag	DESCRIPTION 1	DESCRIPTION 2	DESCRIPTION 3	FUNCTION	TYPE	Rack	Slot	Point	Units	Min	Max	P&ID Dwg	NOTES
			-		Spare				DI	1	1	0					Moved from original IO list - 4/4/25 KD
			-		Spare				DI	1	1	1					Moved from original IO list - 4/4/25 KD
			-		CONTROL VALVE			CLOSED	DI	1	1	2					
			-		Spare				DI	1	1	3					Moved from original IO list - 4/4/25 KD
			-		Spare				DI	1	1	4					
			-		Spare				DI	1	1	5					
			-		Spare				DI	1	1	6					
			-		INTRUSION			ALARM	DI	1	1	7					
			-		Spare				DI	1	1	8					
			-		DRY WELL	FLOOD SWITCH		ALARM	DI	1	1	9					Moved from original IO list - 4/4/25 KD
			-		PANIC			ALARM	DI	1	1	10					Moved from original IO list - 4/4/25 KD
			-		Spare				DI	1	1	11					
			-		120VAC Control Power			Fail	DI	1	1	12					Moved from original IO list - 4/4/25 KD
			-		24VDC Control Power			Fail	DI	1	1	13					Moved from original IO list - 4/4/25 KD
			-		DC UPS			On Battery	DI	1	1	14					Moved from original IO list - 4/4/25 KD
			-		DC UPS			Alarm	DI	1	1	15					Moved from original IO list - 4/4/25 KD
			-		Spare				DO	1	2	0					
			-		Spare				DO	1	2	1					
			-		Spare				DO	1	2	2					
			-		545 ZONE HYDRAULIC	CONTROL VALVE No.1	SOLENOID	OPEN COMMAND	DO	1	2	3					
			-		545 ZONE HYDRAULIC	CONTROL VALVE No.1	SOLENOID	CLOSE COMMAND	DO	1	2	4					
			-		545 ZONE HYDRAULIC	CONTROL VALVE No.1	SOLENOID PRESSURE REDUCING	CALL COMMAND	DO	1	2	5					
			-		Spare				DO	1	2	6					
			-		Spare				DO	1	2	7					
			-		Spare				DO	1	2	8					
			-		Spare				DO	1	2	9					
			-		Spare				DO	1	2	10					
			-		Spare				DO	1	2	11					
			-		Spare				DO	1	2	12					
			-		Spare				DO	1	2	13					
			-		Spare				DO	1	2	14					
			-		Spare				DO	1	2	15					
			-		SEATTLE	PRESSURE TRANSMITTER	(EXISTING)	PRESSURE	AI	1	3	0	PSI	0	200		
			-		545 ZONE	PRESSURE TRANSMITTER	(EXISTING)	PRESSURE	AI	1	3	1	PSI	0	150		
			-		SEATTLE	WATER FLOWMETER	(EXISTING)	FLOW	AI	1	3	2	GPM	0	6000		
			-		Spare				AI	1	3	3					
			-		Spare				AI	1	3	4					
			-		Spare				AI	1	3	5					
			-		Spare				AI	1	3	6					
			-		Spare				AI	1	3	7					

Know what's below. Call 811 before you dig.

DATE	NO.	REVISION	BY
X/X/X	0	BID SET	

APPROVED BY:

Rob English, PE

DATE: 3/3/2026

Ben Mahony	2/26/2026	DESIGNED BY / DATE
Ben Mahony	2/26/2026	DRAWN BY / DATE
I-Wen Yang, PE	2/26/2026	REVIEWED BY / DATE

CITY OF KIRKLAND

DEPARTMENT OF PUBLIC WORKS
123 FIFTH AVENUE KIRKLAND, WA 98033
(425) 587–3800 www.kirklandwa.gov

SCADA REPLACEMENT

S1 - I/O LIST

REFERENCE SHEET NO.
S1_IO_01

SHEET
97
of
366

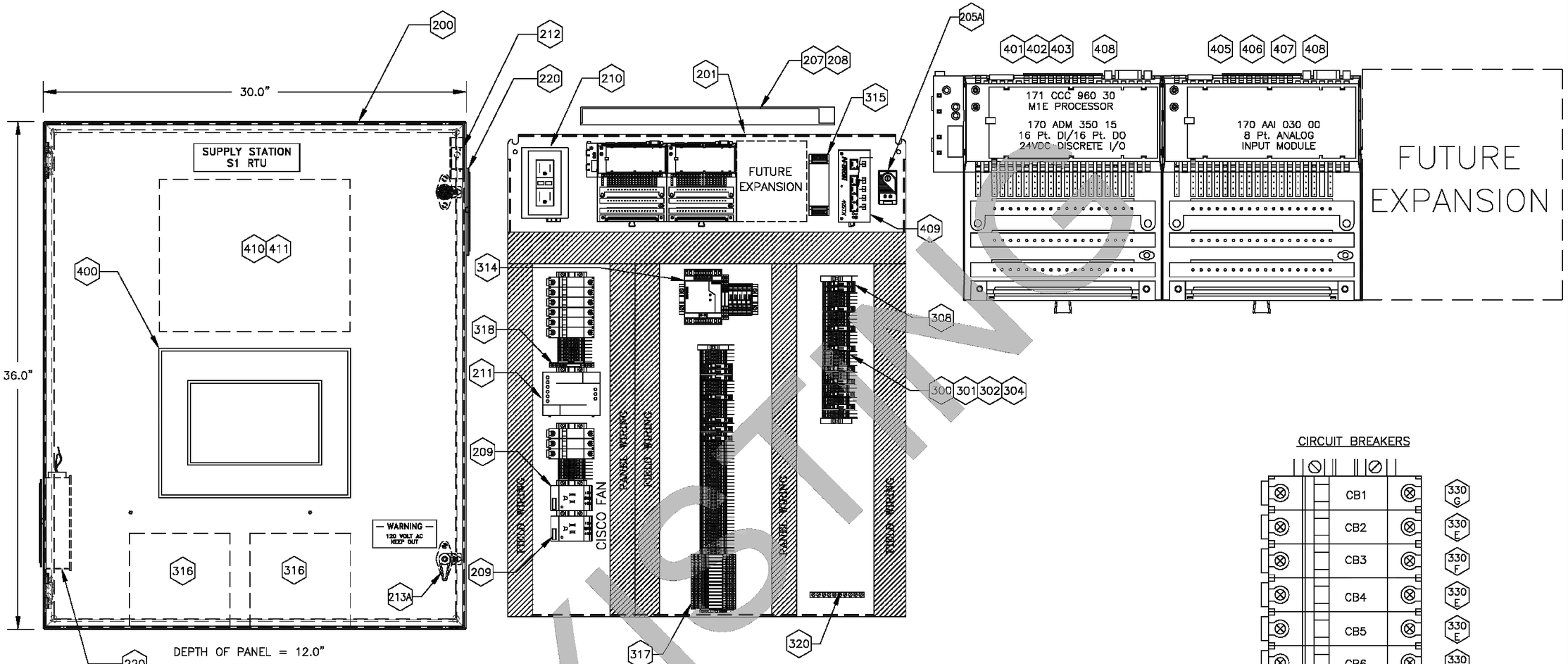

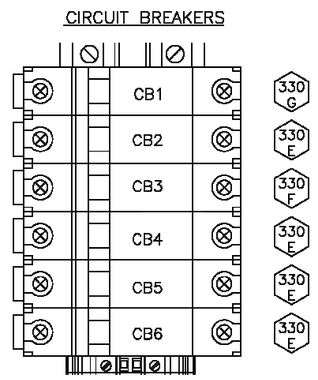

BLACK MATTE PHENOLIC WITH WHITE 1/2" LETTERING

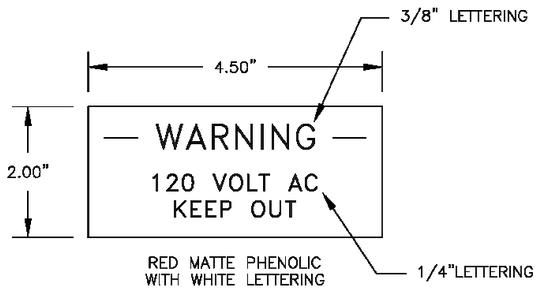

RED MATTE PHENOLIC
WITH WHITE LETTERING

EXISTING

Know what's below. Call 811 before you dig.

DATE	NO.	REVISION	BY
X/X/X	0	BID SET	

APPROVED BY:

Rob English, PE

DATE: 3/3/2026

Ben Mahony	DESIGNED BY	2/26/2026 DATE
Ben Mahony	DRAWN BY	2/26/2026 DATE
I-Wen Yang, PE	REVIEWED BY	2/26/2026 DATE

CITY OF KIRKLAND
WASHINGTON

CITY OF KIRKLAND
DEPARTMENT OF PUBLIC WORKS
123 FIFTH AVENUE KIRKLAND, WA 98033
(425) 587-3800 www.kirklandwa.gov

TELEMETRY PANEL - PANEL LAYOUT
SCADA REPLACEMENT
SUPPLY STATION 1 EXISTING CONTROL PANEL (REFERENCE)

REFERENCE SHEET NO.
SS1-J01

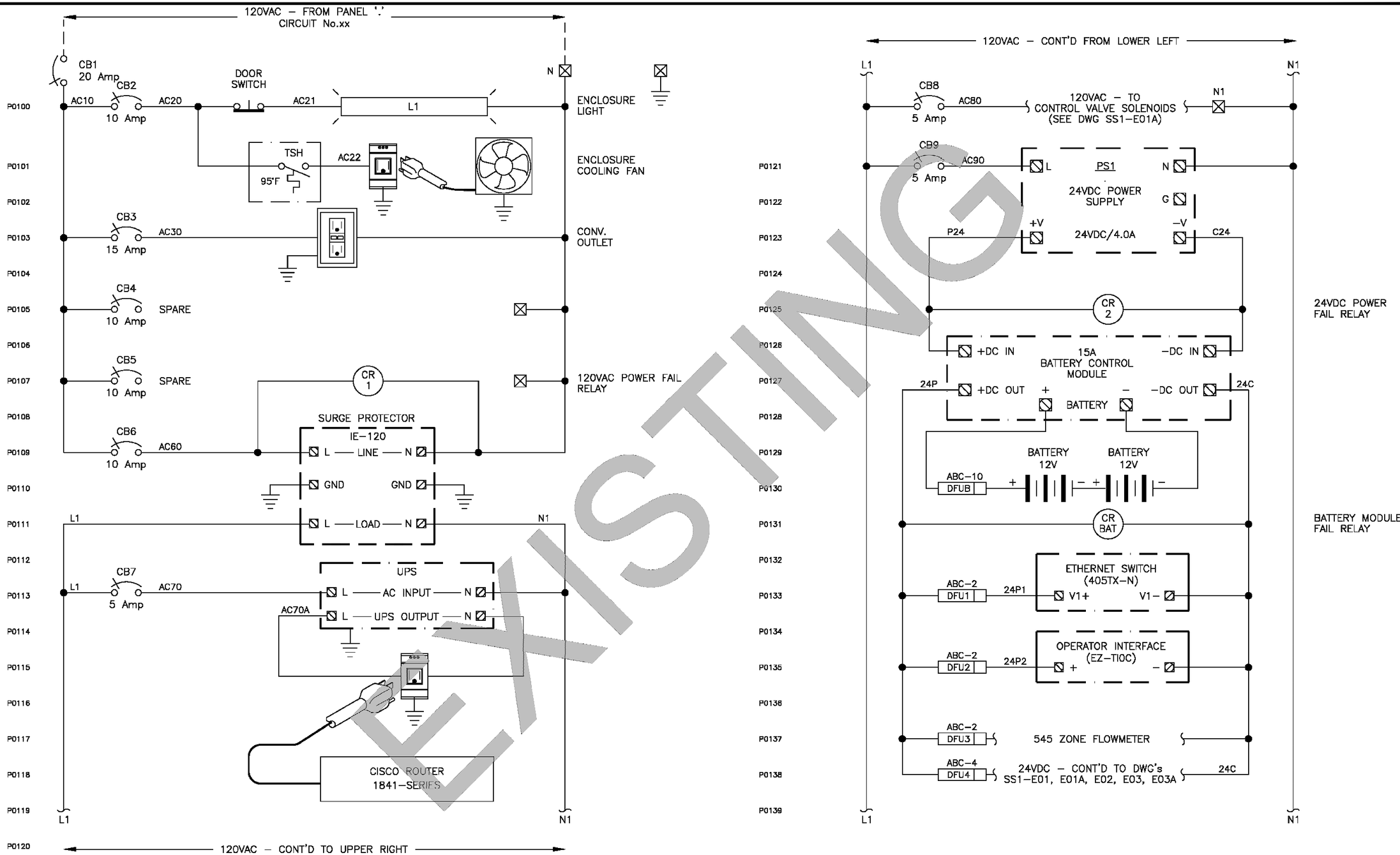

EXISTING

Know what's below. Call 811 before you dig.

DATE	NO.	REVISION	BY
X/X/X	0	BID SET	

APPROVED BY:

Rob English, PE

DATE: 3/3/2026

Ben Mahony	DESIGNED BY	2/26/2026 DATE
Ben Mahony	DRAWN BY	2/26/2026 DATE
I-Wen Yang, PE	REVIEWED BY	2/26/2026 DATE

CITY OF KIRKLAND WASHINGTON

CITY OF KIRKLAND
DEPARTMENT OF PUBLIC WORKS
123 FIFTH AVENUE KIRKLAND, WA 98033
(425) 587–3800 www.kirklandwa.gov

TELEMETRY PANEL - POWER WIRING DIAGRAM
SCADA REPLACEMENT
SUPPLY STATION 1 EXISTING CONTROL PANEL (REFERENCE)

REFERENCE SHEET NO.
SS1-P01

SHEET 99 of 366

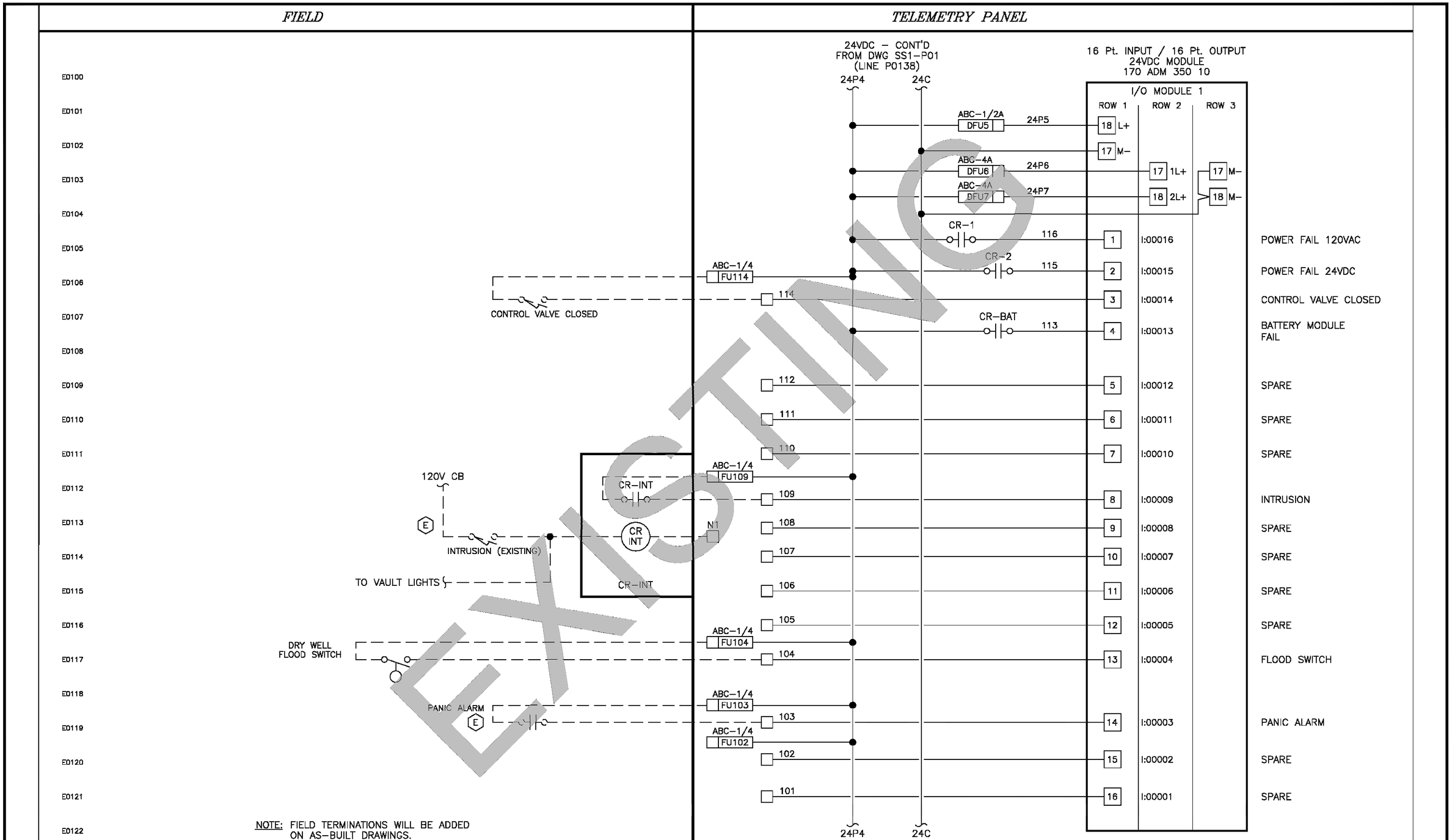

DATE	NO.	REVISION	BY
X/X/X	0	BID SET	

Know what's below. Call 811 before you dig.

APPROVED BY:

Rob English, PE

DATE: 3/3/2026

Ben Mahony (DESIGNED BY)	2/26/2026 (DATE)
Ben Mahony (DRAWN BY)	2/26/2026 (DATE)
I-Wen Yang, PE (REVIEWED BY)	2/26/2026 (DATE)

CITY OF KIRKLAND WASHINGTON

CITY OF KIRKLAND
DEPARTMENT OF PUBLIC WORKS
123 FIFTH AVENUE KIRKLAND, WA 98033
(425) 587–3800 www.kirklandwa.gov

TELEMETRY PANEL - I/O MODULE 1 (INPUTS) - CONTROL WIRING DIAGRAM
SCADA REPLACEMENT

SUPPLY STATION 1 EXISTING CONTROL PANEL (REFERENCE)

REFERENCE SHEET NO. SS1-E01

SHEET 100 of 366

FIELD

E0200
E0201
E0202
E0203
E0204
E0205
E0206
E0207
E0208
E0209
E0210
E0211
E0212
E0213
E0214
E0215
E0216
E0217
E0218
E0219
E0220
E0221
E0222

545 ZONE
HYDRAULIC CONTROL
VALVE No.1

OPEN
SV1-1

CLOSE
SV1-2

PRV
SV1-3

NOTE: FIELD TERMINATIONS WILL BE ADDED ON AS-BUILT DRAWINGS.

TELEMETRY PANEL

CR03A
CR03B
CR-03

CR04A
CR04B
CR-04

CR05A
CR05B
CR-05

CR-06
CR06A
N1

CR-07
CR07A
N1

CR-08
CR08A
N1

CR-09
CR09B
N1

CR-10
CR10B
N1

CR-11
CR11B
N1

CR12A
CR12B
CR-12

CR13A
CR13B
CR-13

CR14A
CR14B
CR-14

CR15A
CR15B
CR-15

CR16A
CR16B
CR-16

CR17A
CR17B
CR-17

CR18A
CR18B
CR-18

120VAC – CONT'D
FROM DWG SS1-P01
(LINE P0118)
AC80 N1

24VDC – CONT'D
FROM DWG SS1-P01
(LINE P0138)
24P4 24C

16 Pt. INPUT / 16 Pt. OUTPUT
24VDC MODULE
170 ADM 350 10

I/O MODULE 1

	ROW 1	ROW 2	ROW 3	
CR 3	016	1	0:00016	SPARE
CR 4	015	2	0:00015	SPARE
CR 5	014	3	0:00014	SPARE
CR 6	013	4	0:00013	545 ZONE HYDRAULIC CONTROL VALVE No.1 SOLENOID OPEN CALL
CR 7	012	5	0:00012	545 ZONE HYDRAULIC CONTROL VALVE No.1 SOLENOID CLOSE CALL
CR 8	011	6	0:00011	545 ZONE HYDRAULIC CONTROL VALVE No.1 SOLENOID PRESSURE REDUCING CALL
CR 9	010	7	0:00010	SPARE
CR 10	009	8	0:00009	SPARE
CR 11	008	9	0:00008	SPARE
CR 12	007	10	0:00007	SPARE
CR 13	006	11	0:00006	SPARE
CR 14	005	12	0:00005	SPARE
CR 15	004	13	0:00004	SPARE
CR 16	003	14	0:00003	SPARE
CR 17	002	15	0:00002	SPARE
CR 18	001	16	0:00001	SPARE

24P 24C

EXISTING

Know what's below. Call 811 before you dig.

DATE	NO.	REVISION	BY
X/X/X	0	BID SET	

APPROVED BY:

Rob English, PE

DATE: 3/3/2026

Ben Mahony 2/26/2026
DESIGNED BY DATE

Ben Mahony 2/26/2026
DRAWN BY DATE

I-Wen Yang, PE 2/26/2026
REVIEWED BY DATE

CITY OF KIRKLAND WASHINGTON

CITY OF KIRKLAND
DEPARTMENT OF PUBLIC WORKS
123 FIFTH AVENUE KIRKLAND, WA 98033
(425) 587-3800 www.kirklandwa.gov

TELEMETRY PANEL - I/O MODULE 1 (OUTPUTS) - CONTROL WIRING DIAGRAM
SCADA REPLACEMENT

SUPPLY STATION 1 EXISTING CONTROL PANEL (REFERENCE)

REFERENCE SHEET NO.
SS1-EO1A

PUMP CONTROL PANEL

TELEMETRY PANEL

E0400
E0401
E0402
E0403
E0404
E0405
E0406
E0407
E0408
E0409
E0410
E0411
E0412
E0413
E0414
E0415
E0416
E0417
E0418
E0419
E0420
E0421
E0422

SEATTLE
PRESSURE TRANSMITTER
(EXISTING)
(0–200 PSI)

545 ZONE
PRESSURE TRANSMITTER
(EXISTING)
(0–150 PSI)

SEATTLE
WATER FLOWMETER
(EXISTING)
(0–6000 GPM)

24VDC – CONT'D
FROM DWG SS1–P01
(LINE P0138)

24P4 24C

ABC–1/2A
DFU10
24P10

8 Pt. ANALOG INPUT
MODULE BASE
170 AAI 030 00

MODULE 3
ROW 3 ROW 2

18 L+
17 M–

ABC–1/4
FU301
301+
301–
24C
SHLD
4–20 mA

2 InI1
1 Agnd1
2 InI1
1 InU1
IN 1 300001

ABC–1/4
FU302
302+
302–
24C
SHLD
4–20 mA

4 InI2
3 Agnd2
4 InI2
3 InU2
IN 2 300002

ABC–1/4
FU303
303+
303–
24C
SHLD
4–20 mA

6 InI3
5 Agnd3
6 InI3
5 InU3
IN 3 300003

ABC–1/4
FU304
304+
304–
24C
SHLD
4–20 mA

8 InI4
7 Agnd4
8 InI4
7 InU4
IN 4 300004

CONT'D TO DWG SS1–E02A

24P 24C

NOTE: FIELD TERMINATIONS WILL BE ADDED ON AS–BUILT DRAWINGS.

EXISTING

Know what's below. Call 811 before you dig.

DATE	NO.	REVISION	BY
X/X/X	0	BID SET	

APPROVED BY:

Rob English, PE

DATE: 3/3/2026

Ben Mahony	DESIGNED BY	2/26/2026 DATE
Ben Mahony	DRAWN BY	2/26/2026 DATE
I-Wen Yang, PE	REVIEWED BY	2/26/2026 DATE

CITY OF KIRKLAND WASHINGTON

CITY OF KIRKLAND
DEPARTMENT OF PUBLIC WORKS
123 FIFTH AVENUE KIRKLAND, WA 98033
(425) 587–3800 www.kirklandwa.gov

TELEMETRY PANEL - I/O MODULE 2, ANALOG - CONTROL WIRING DIAGRAM (1)

SCADA REPLACEMENT

SUPPLY STATION 1 EXISTING CONTROL PANEL (REFERENCE)

REFERENCE SHEET NO. SS1-EO2

PUMP CONTROL PANEL

E0400
E0401
E0402
E0403
E0404
E0405
E0406
E0407
E0408
E0409
E0410
E0411
E0412
E0413
E0414
E0415
E0416
E0417
E0418
E0419
E0420
E0421
E0422

NOTE: FIELD TERMINATIONS WILL BE ADDED ON AS-BUILT DRAWINGS.

TELEMETRY PANEL

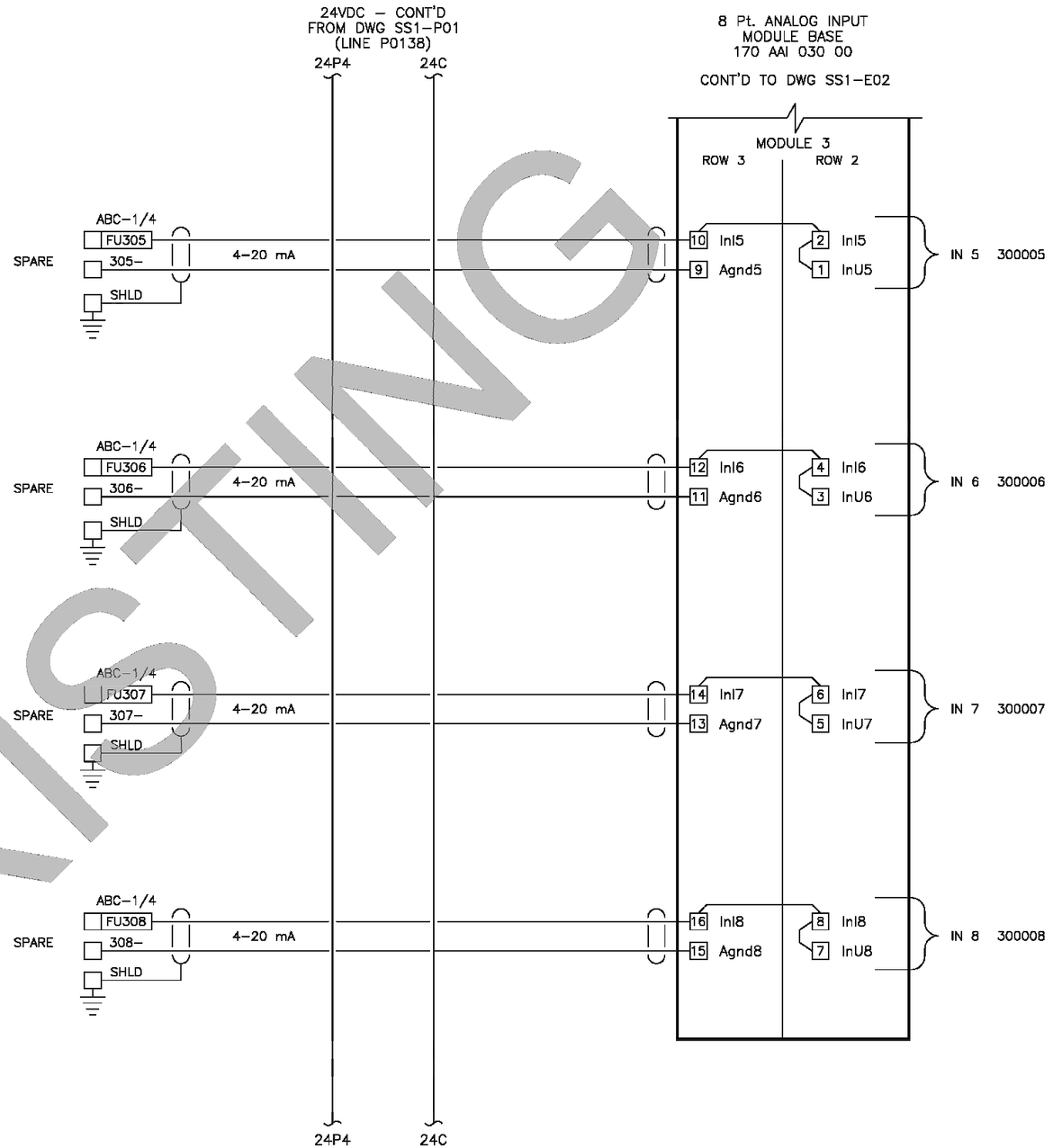

EXISTING

Know what's below. Call 811 before you dig.

DATE	NO.	REVISION	BY
X/X/X	0	BID SET	

APPROVED BY:

Rob English, PE

DATE: 3/3/2026

Ben Mahony DESIGNED BY 2/26/2026 DATE
Ben Mahony DRAWN BY 2/26/2026 DATE
I-Wen Yang, PE REVIEWED BY 2/26/2026 DATE

CITY OF KIRKLAND WASHINGTON

CITY OF KIRKLAND
DEPARTMENT OF PUBLIC WORKS
123 FIFTH AVENUE KIRKLAND, WA 98033
(425) 587–3800 www.kirklandwa.gov

TELEMETRY PANEL - I/O MODULE 2, ANALOG - CONTROL WIRING DIAGRAM (2)
SCADA REPLACEMENT

SUPPLY STATION 1 EXISTING CONTROL PANEL (REFERENCE)

REFERENCE SHEET NO.
SS1-EO2A

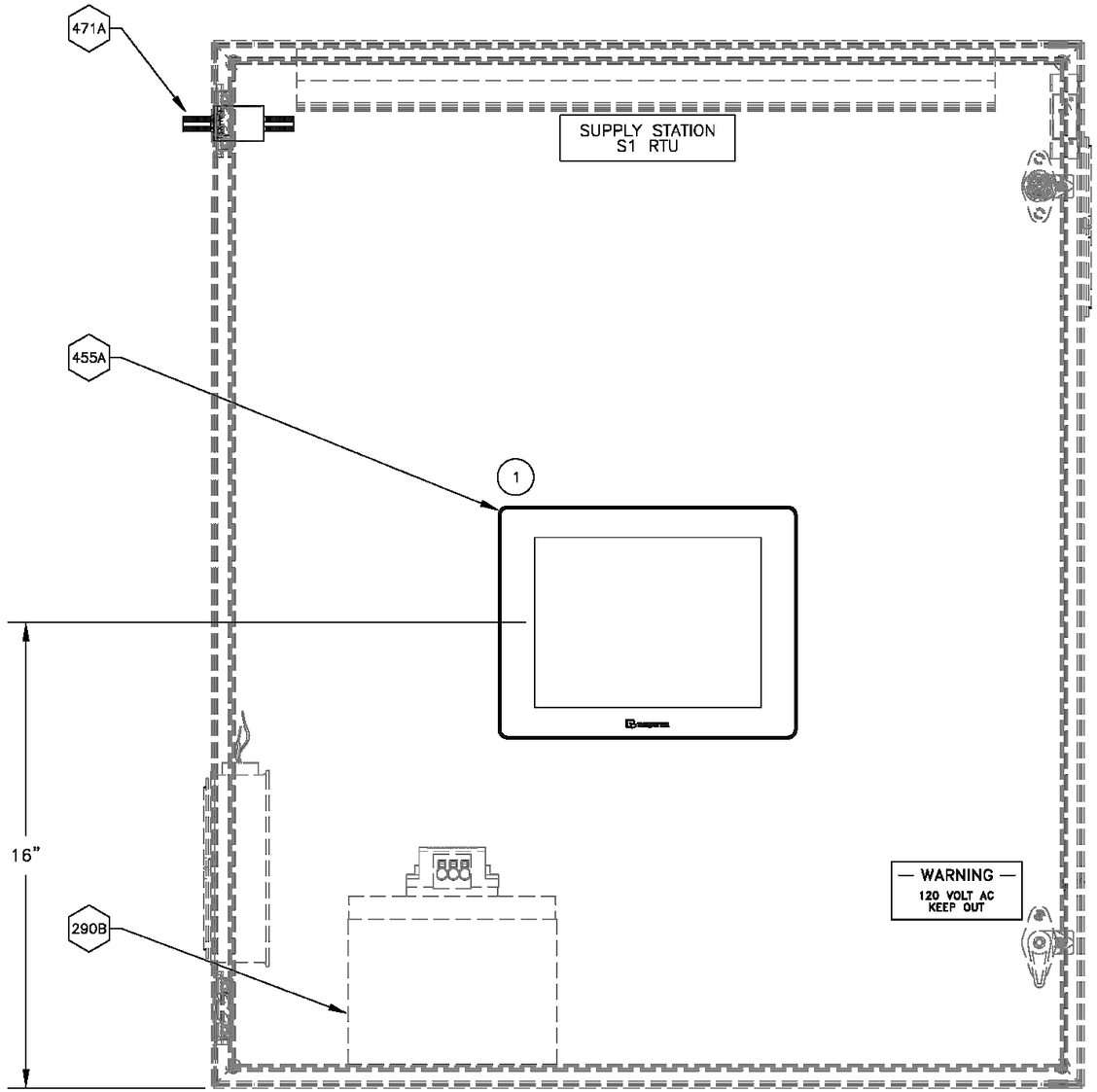

EXISTING ENCLOSURE

CONDUIT ENTRY
BOTTOM

NEMA RATING
12

MATERIAL
PAINTED CARBON STEEL

BUILD TYPE (FOR INTERNAL USE)
STANDARD

PANEL POWER SOURCE

PANEL xx CIRCUIT xx
120 VOLTS 1PH 60Hz

PANEL RATING

FULL LOAD AMPS 10A
SHORT CIRCUIT 10KAIC
LARGEST MOTOR FLA N/A

XXX BOM ITEM NUMBER

NOTES:
1. INSTALL NEW MAPLE SYSTEMS OIT
2. REMOVE EXISTING BATTERY AND REPLACE WITH NEW
3. REMOVE EXISTING ROUTER FROM INSIDE OF DOOR

811 Know what's below. Call 811 before you dig.

DATE	NO.	REVISION	BY
X/X/X	0	BID SET	

APPROVED BY:

Rob English, PE

DATE: 3/3/2026

Ben Mahony (DESIGNED BY)	2/26/2026 (DATE)
Ben Mahony (DRAWN BY)	2/26/2026 (DATE)
I-Wen Yang, PE (REVIEWED BY)	2/26/2026 (DATE)

CITY OF KIRKLAND
DEPARTMENT OF PUBLIC WORKS
123 FIFTH AVENUE KIRKLAND, WA 98033
(425) 587-3800 www.kirklandwa.gov

LAYOUT - PANEL - FRONT ELEVATION

SCADA REPLACEMENT

SUPPLY STATION 1 CONTROL PANEL (S1)

REFERENCE SHEET NO.
S1-10.00

SHEET 104 of 366

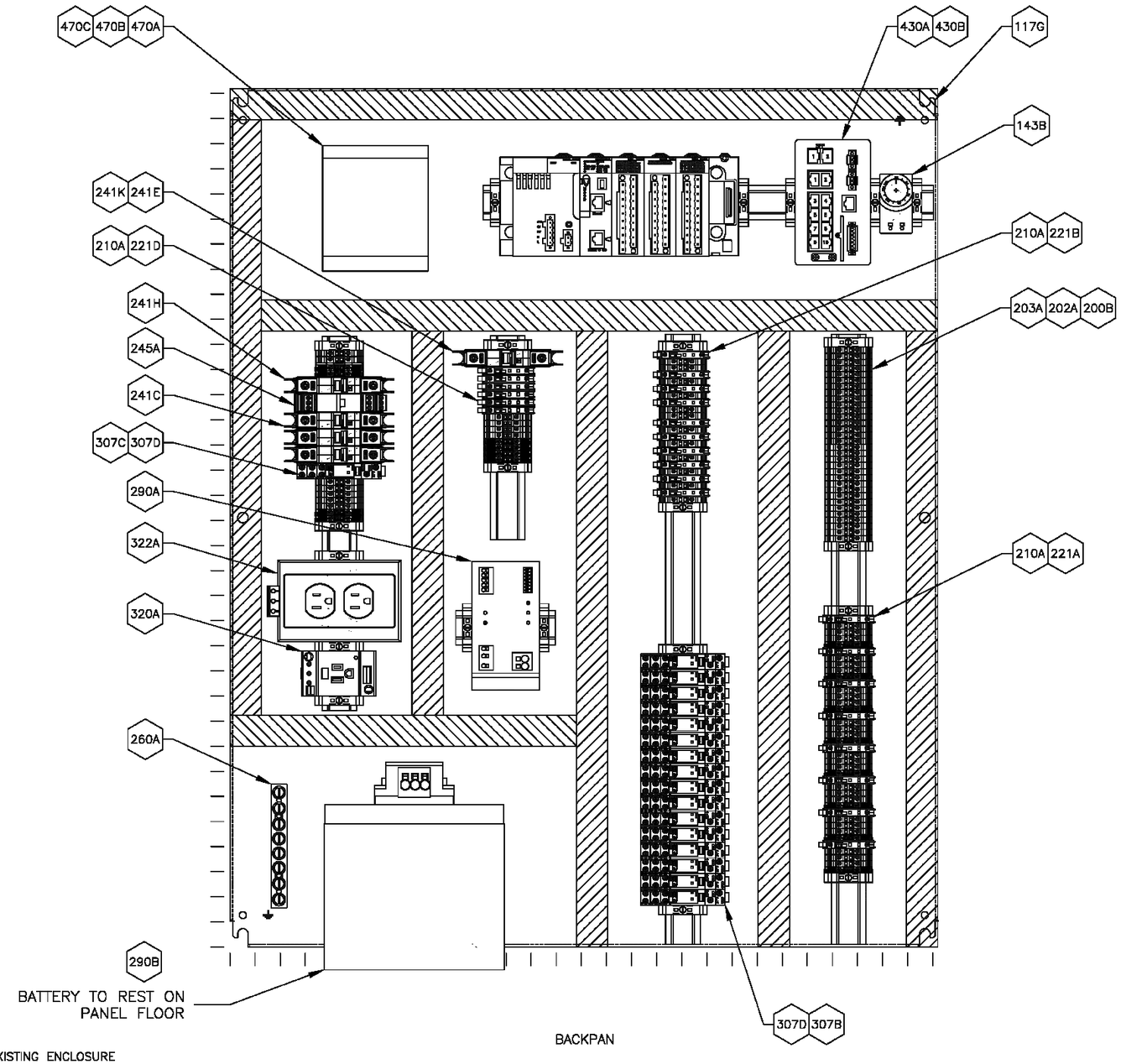

NOTES:
1. BACKPANEL ASSEMBLY TO BE INSTALLED IN EXISTING ENCLOSURE

XXX BOM ITEM NUMBER

Know what's below. Call 811 before you dig.

DATE	NO.	REVISION	BY
X/X/X	0	BID SET	

APPROVED BY:

Rob English, PE

DATE: 3/3/2026

Ben Mahony (DESIGNED BY)	2/26/2026 (DATE)
Ben Mahony (DRAWN BY)	2/26/2026 (DATE)
I-Wen Yang, PE (REVIEWED BY)	2/26/2026 (DATE)

CITY OF KIRKLAND, WASHINGTON

CITY OF KIRKLAND
DEPARTMENT OF PUBLIC WORKS
123 FIFTH AVENUE KIRKLAND, WA 98033
(425) 587-3800 www.kirklandwa.gov

LAYOUT - PANEL - BACKPAN ELEVATION

SCADA REPLACEMENT

SUPPLY STATION 1 CONTROL PANEL (S1)

REFERENCE SHEET NO.
S1-10.05

SHEET 105 of 366

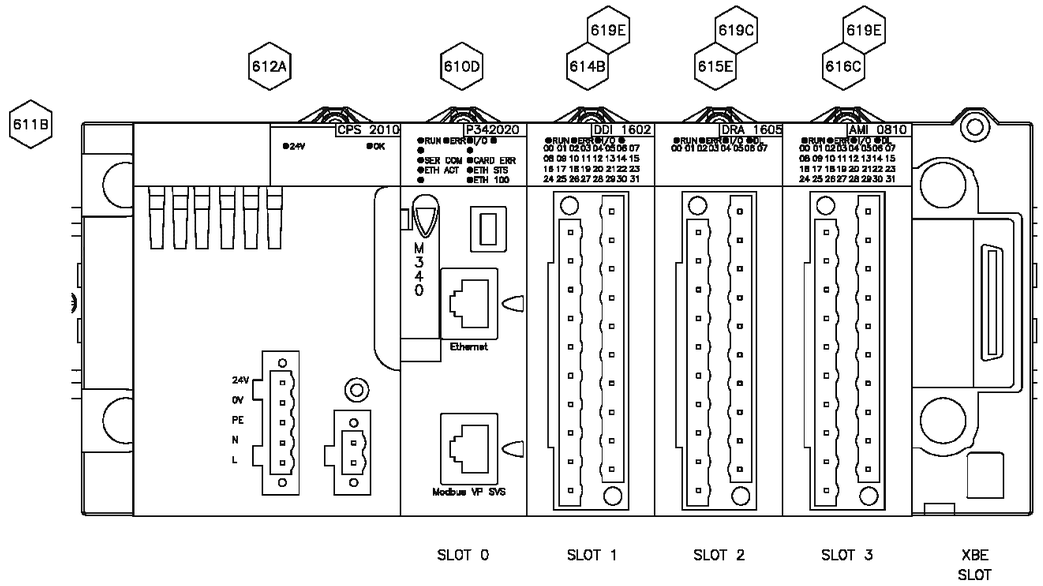

RACK 1

XXX BOM ITEM NUMBER

DATE	NO.	REVISION	BY
X/X/X	0	BID SET	

APPROVED BY:

Rob English, PE

DATE: 3/3/2026

Ben Mahony 2/26/2026
DESIGNED BY DATE

Ben Mahony 2/26/2026
DRAWN BY DATE

I-Wen Yang, PE 2/26/2026
REVIEWED BY DATE

CITY OF KIRKLAND

DEPARTMENT OF PUBLIC WORKS
123 FIFTH AVENUE KIRKLAND, WA 98033
(425) 587-3800 www.kirklandwa.gov

LAYOUT - PANEL - PLC RACK 1

SCADA REPLACEMENT

SUPPLY STATION 1 CONTROL PANEL (S1)

REFERENCE SHEET NO.
S1-10.07

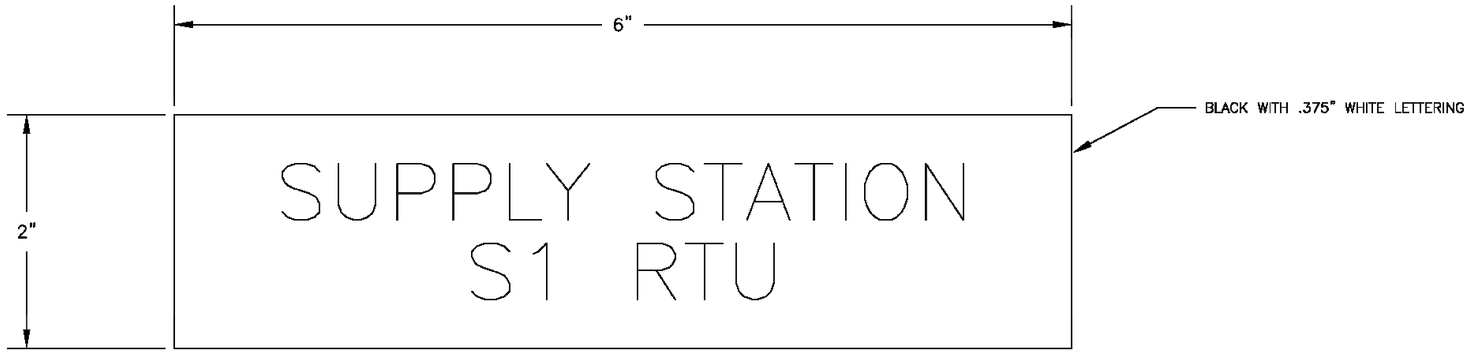

XXX BOM ITEM NUMBER

Know what's below. Call 811 before you dig.

DATE	NO.	REVISION	BY
X/X/X	0	BID SET	

APPROVED BY:

Rob English, PE

DATE: 3/3/2026

Ben Mahony	DESIGNED BY	2/26/2026 DATE
Ben Mahony	DRAWN BY	2/26/2026 DATE
I-Wen Yang, PE	REVIEWED BY	2/26/2026 DATE

CITY OF KIRKLAND

DEPARTMENT OF PUBLIC WORKS
123 FIFTH AVENUE KIRKLAND, WA 98033
(425) 587-3800 www.kirklandwa.gov

LAYOUT - PANEL - NAMEPLATE DETAIL

SCADA REPLACEMENT

SUPPLY STATION 1 CONTROL PANEL (S1)

REFERENCE SHEET NO.
S1-10.20

SHEET 107 of 366

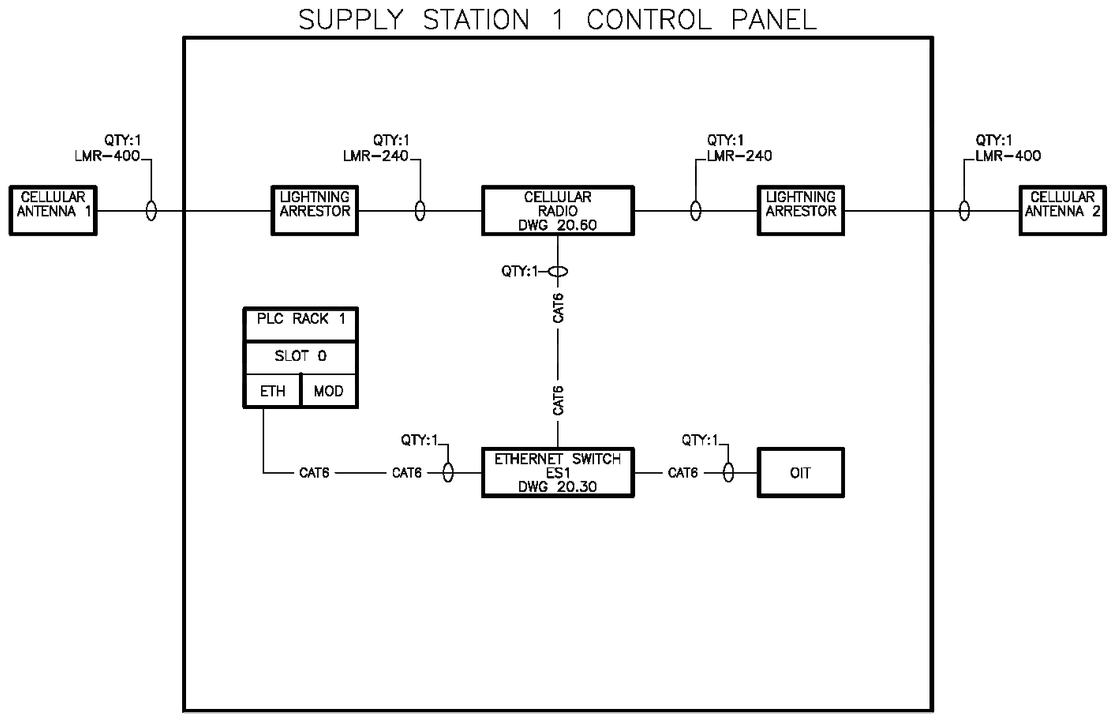

Know what's below. Call 811 before you dig.

DATE	NO.	REVISION	BY
X/X/X	0	BID SET	

APPROVED BY:

Rob English, PE

DATE: 3/3/2026

Ben Mahony — DESIGNED BY — 2/26/2026 DATE

Ben Mahony — DRAWN BY — 2/26/2026 DATE

I-Wen Yang, PE — REVIEWED BY — 2/26/2026 DATE

CITY OF KIRKLAND WASHINGTON

CITY OF KIRKLAND
DEPARTMENT OF PUBLIC WORKS
123 FIFTH AVENUE KIRKLAND, WA 98033
(425) 587-3800 www.kirklandwa.gov

NETWORK OVERVIEW DIAGRAM

SCADA REPLACEMENT

SUPPLY STATION 1 CONTROL PANEL (S1)

REFERENCE SHEET NO.
S1-20.00

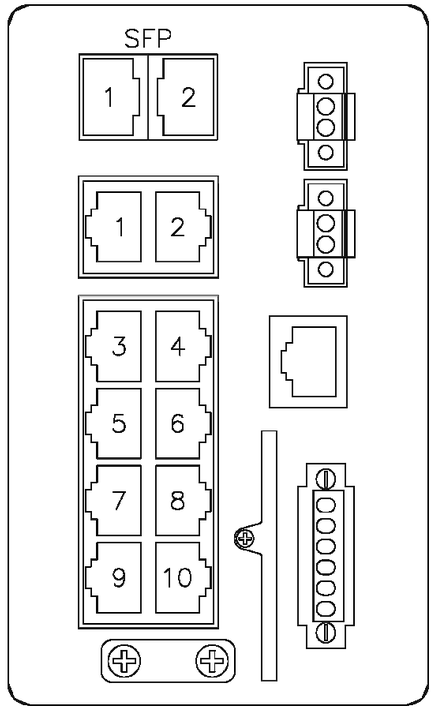

NETWORK SWITCH NS-1					
				DESTINATION DEVICE	
PORT#	CABLE TYPE	NETWORK DESCRIPTION	CABLE LABEL	DESCRIPTION	PORT #
1	CAT6	PROGRAMMABLE LOGIC CONTROLLER	PLC	PROGRAMMABLE LOGIC CONTROLLER	1
2	CAT6	OPERATIONAL INTERFACE TERMINAL	OIT	OPERATIONAL INTERFACE TERMINAL	1
3	CAT6	CELLULAR RADIO	RADIO	CELLULAR RADIO	ETHERNET
4					
5					
6					
7					
8					
COMBO 1					
COMBO 2					

Know what's below. Call 811 before you dig.

DATE	NO.	REVISION	BY
X/X/X	0	BID SET	

APPROVED BY:

Rob English, PE

DATE: 3/3/2026

Ben Mahony 2/26/2026
DESIGNED BY DATE

Ben Mahony 2/26/2026
DRAWN BY DATE

I-Wen Yang, PE 2/26/2026
REVIEWED BY DATE

CITY OF KIRKLAND WASHINGTON

CITY OF KIRKLAND
DEPARTMENT OF PUBLIC WORKS
123 FIFTH AVENUE KIRKLAND, WA 98033
(425) 587-3800 www.kirklandwa.gov

NETWORK SWITCH (NS-1), PORT SCHEDULE

SCADA REPLACEMENT

SUPPLY STATION 1 CONTROL PANEL (S1)

REFERENCE SHEET NO.
S1-23.00

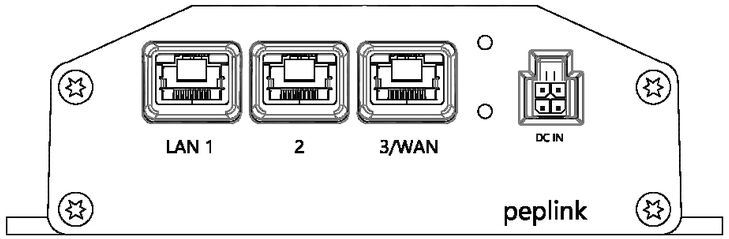

CELLULAR MODEM CM1				DESTINATION DEVICE	
PORT#	CABLE TYPE	NETWORK DESCRIPTION	CABLE LABEL	DESCRIPTION	PORT #
LAN 1	CAT6	CELLULAR RADIO	RADIO	ETHERNET SWITCH	3
LAN 2					
LAN 3/ WAN					
MAIN	LMR-240	CELLULAR ANTENNA 1	CELL-1	LIGHTNING ARRESTOR 1	N/A
AUX	LMR-240	CELLULAR ANTENNA 1	CELL-2	LIGHTNING ARRESTOR 2	N/A

Know what's below. Call 811 before you dig.

DATE	NO.	REVISION	BY
X/X/X	0	BID SET	

APPROVED BY:

Rob English, PE

DATE: 3/3/2026

Ben Mahony 2/26/2026
DESIGNED BY DATE

Ben Mahony 2/26/2026
DRAWN BY DATE

I-Wen Yang, PE 2/26/2026
REVIEWED BY DATE

CITY OF KIRKLAND WASHINGTON

CITY OF KIRKLAND
DEPARTMENT OF PUBLIC WORKS
123 FIFTH AVENUE KIRKLAND, WA 98033
(425) 587-3800 www.kirklandwa.gov

COMM - CELLULAR MODEM (CM1), PORT SCHEDULE

SCADA REPLACEMENT

SUPPLY STATION 1 CONTROL PANEL (S1)

REFERENCE SHEET NO.
S1-26.00

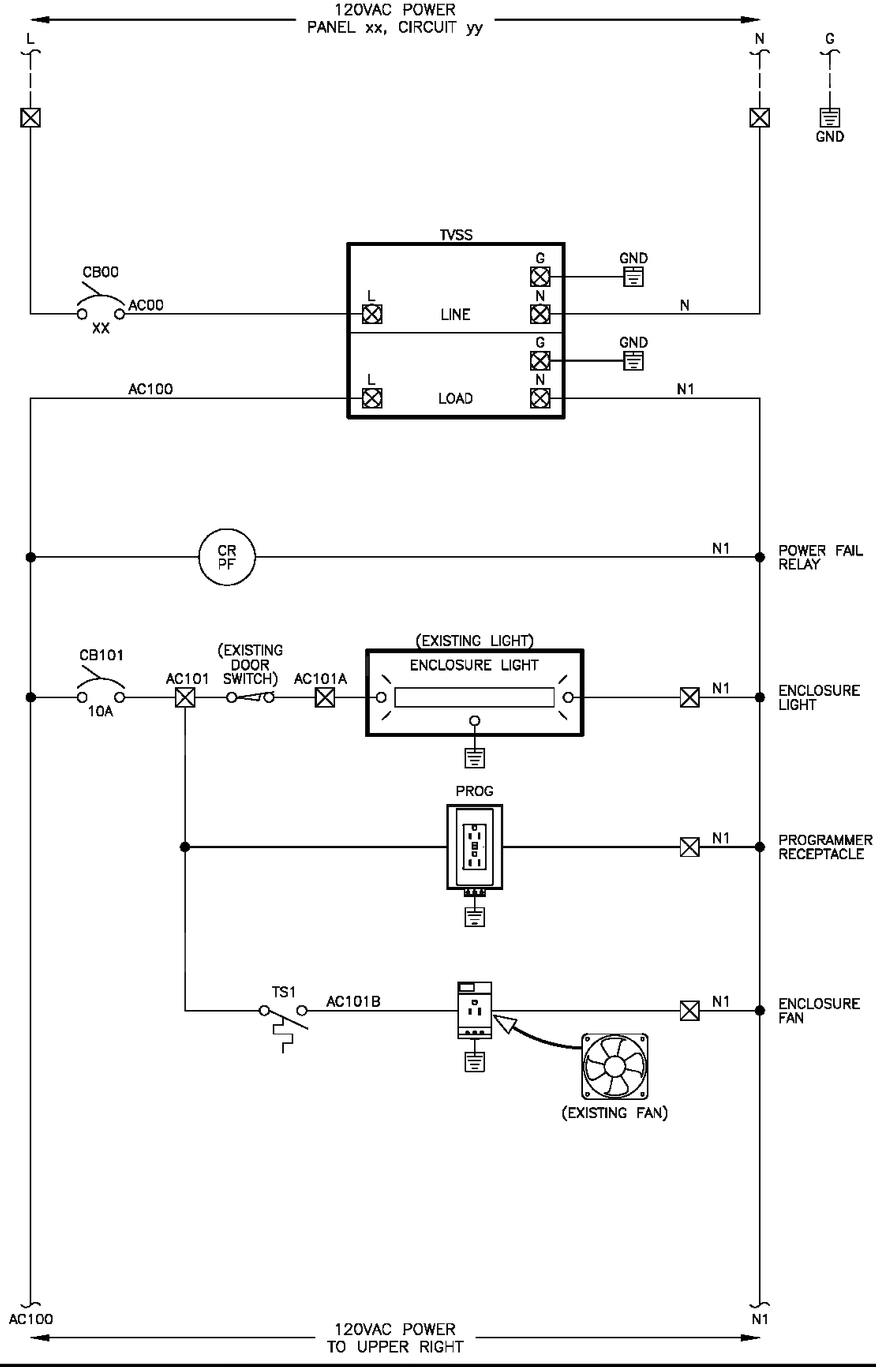

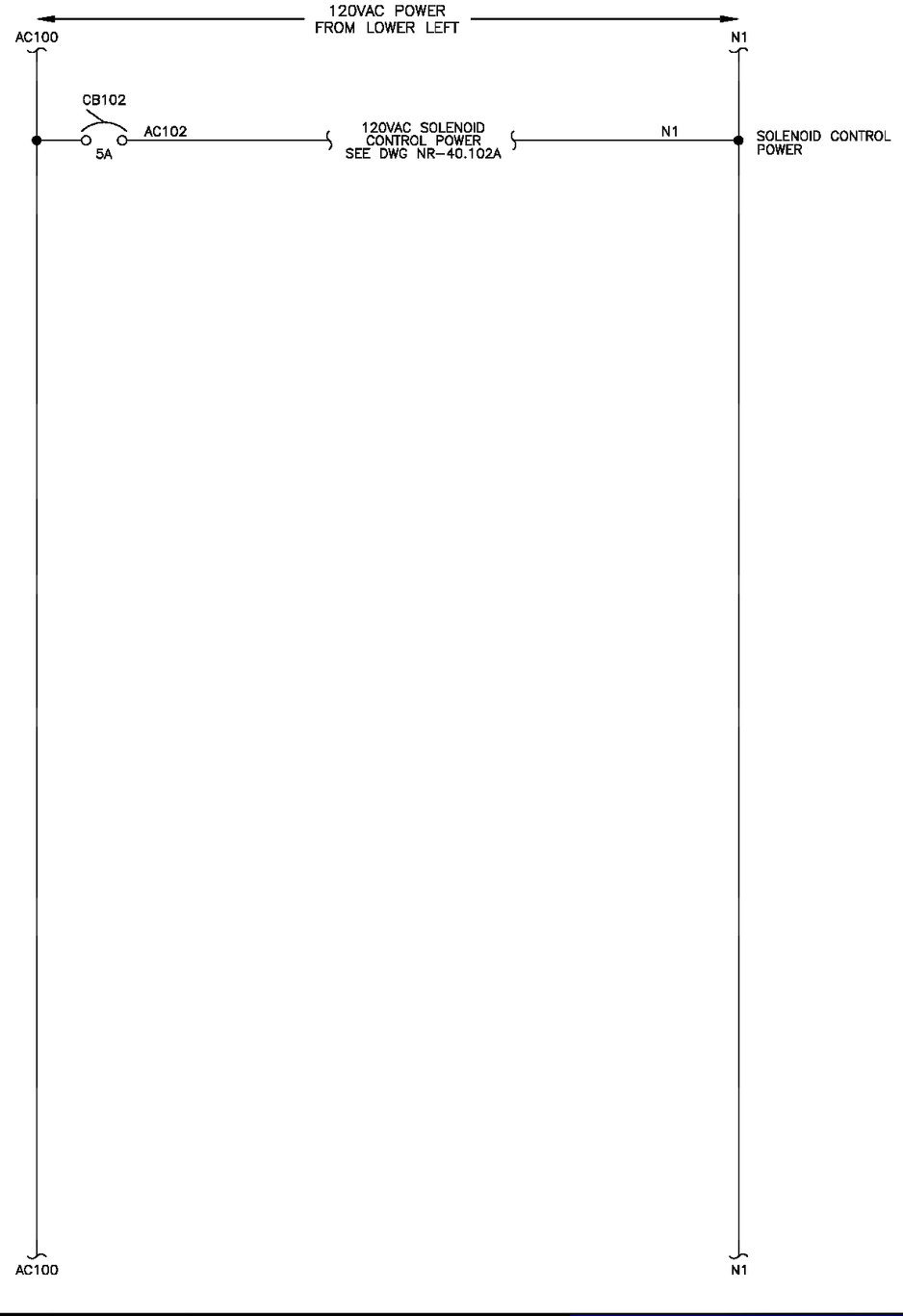

Know what's below. Call 811 before you dig.

DATE	NO.	REVISION	BY
X/X/X	0	BID SET	

APPROVED BY:

Rob English, PE

DATE: 3/3/2026

Ben Mahony (DESIGNED BY)	2/26/2026 (DATE)
Ben Mahony (DRAWN BY)	2/26/2026 (DATE)
I-Wen Yang, PE (REVIEWED BY)	2/26/2026 (DATE)

CITY OF KIRKLAND
WASHINGTON

CITY OF KIRKLAND
DEPARTMENT OF PUBLIC WORKS
123 FIFTH AVENUE KIRKLAND, WA 98033
(425) 587-3800 www.kirklandwa.gov

120VAC POWER DISTRIBTUTION DIAGRAM

SCADA REPLACEMENT

SUPPLY STATION 1 CONTROL PANEL (S1)

REFERENCE SHEET NO.
S1-31.00

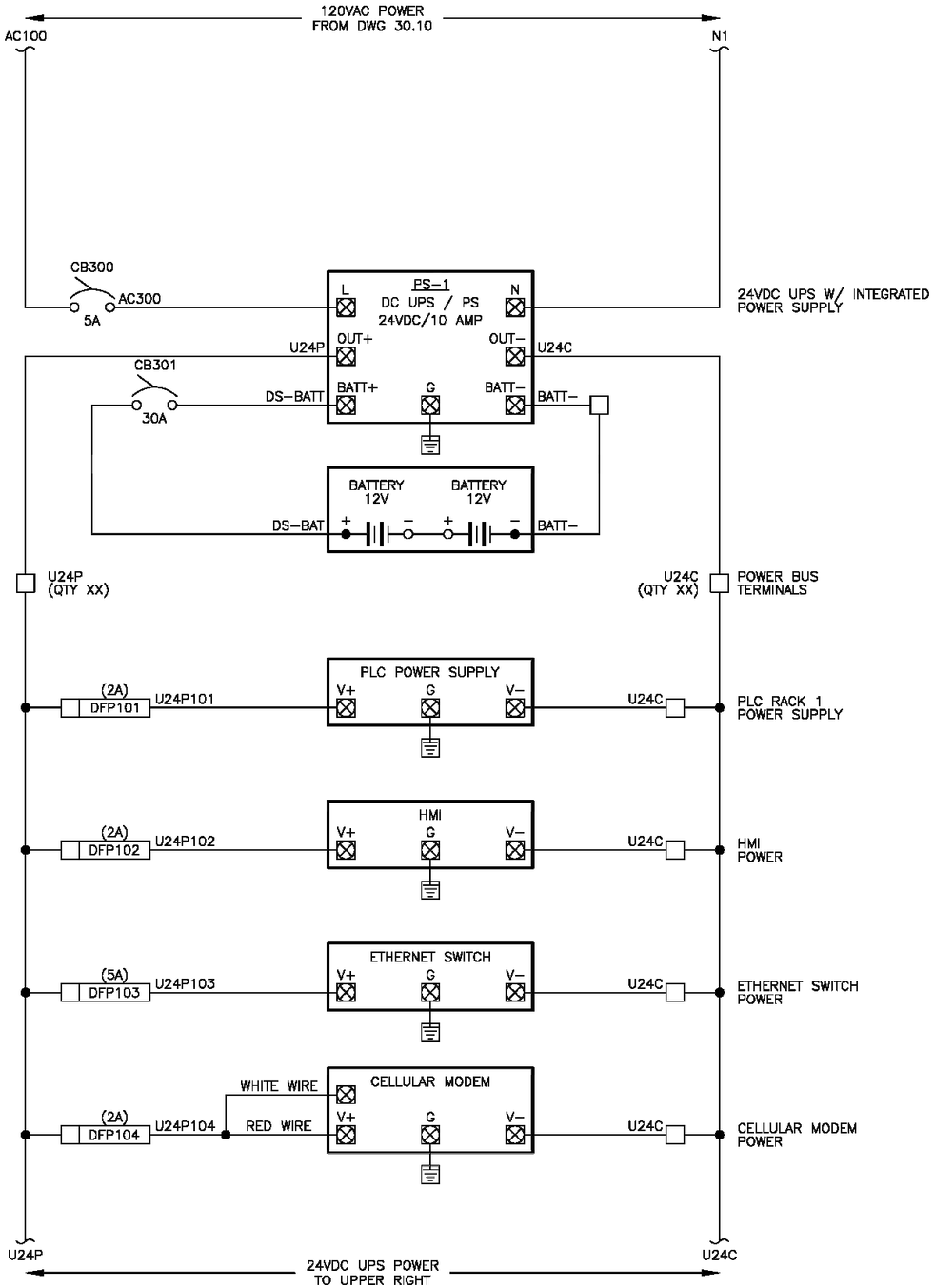

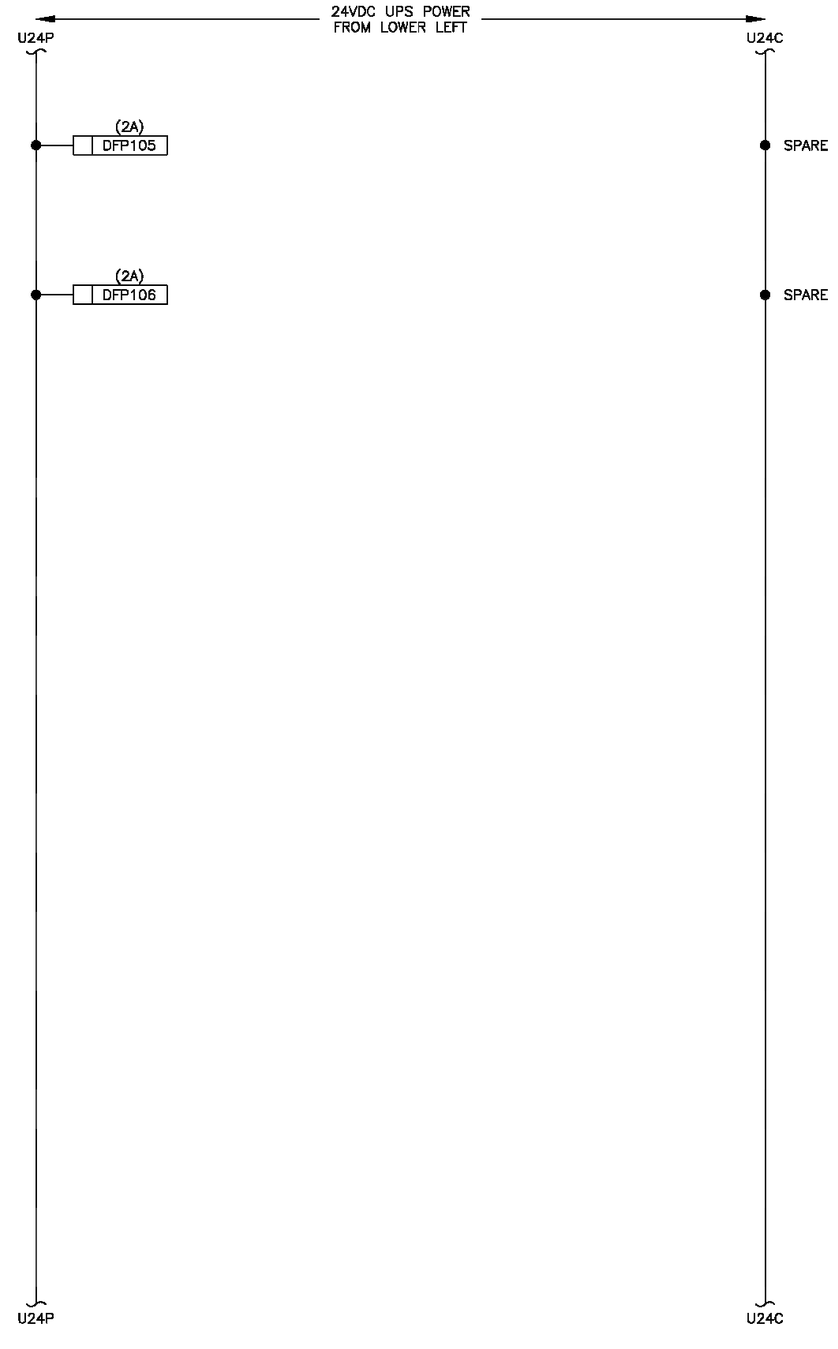

Know what's below. Call 811 before you dig.

DATE	NO.	REVISION	BY
X/X/X	0	BID SET	

APPROVED BY:

Rob English, PE

DATE: 3/3/2026

Ben Mahony	DESIGNED BY	2/26/2026 DATE
Ben Mahony	DRAWN BY	2/26/2026 DATE
I-Wen Yang, PE	REVIEWED BY	2/26/2026 DATE

CITY OF KIRKLAND

DEPARTMENT OF PUBLIC WORKS
123 FIFTH AVENUE KIRKLAND, WA 98033
(425) 587-3800 www.kirklandwa.gov

24VDC POWER DISTRIBTUTION DIAGRAM

SCADA REPLACEMENT

SUPPLY STATION 1 CONTROL PANEL (S1)

REFERENCE SHEET NO.
S1-32.00

SHEET
112
of
366

FIELD

S1

24VDC POWER
FROM DWG 32.00

U24P

U24C

16 PT. 24VDC
DISCRETE INPUT MODULE
RACK 1, SLOT 01

BMXDDI1602

(0.5A) DF.101.00 U24P

DI.101.00

DI.101.00 1 I0 — SPARE

DI.101.01

DI.101.01 2 I1 — SPARE

CONTROL VALVE CLOSED

(0.5A) DF.101.02 U24P

DI.101.02

DI.101.02 3 I2 — CONTROL VALVE CLOSED

(0.5A) DF.101.03 U24P

DI.101.03

DI.101.03 4 I3 — SPARE

DI.101.04

DI.101.04 5 I4 — SPARE

(0.5A) DF.101.05 U24P

DI.101.05

DI.101.05 6 I5 — SPARE

DI.101.06

DI.101.06 7 I6 — SPARE

120V CB

N1

CR INT

(0.5A) DF.101.07 U24P

DI.101.07

DI.101.07 8 I7 — INTRUSION ALARM

E

INTRUSION (EXISTING)

CR INT

TO VAULT LIGHTS

U24P

U24C

(CONTINUED TO DWG 40.101B)

811 Know what's below. Call 811 before you dig.

DATE	NO.	REVISION	BY
X/X/X	0	BID SET	

APPROVED BY:

Rob English, PE

DATE: 3/3/2026

Ben Mahony (DESIGNED BY)	2/26/2026 (DATE)
Ben Mahony (DRAWN BY)	2/26/2026 (DATE)
I-Wen Yang, PE (REVIEWED BY)	2/26/2026 (DATE)

CITY OF KIRKLAND WASHINGTON

CITY OF KIRKLAND
DEPARTMENT OF PUBLIC WORKS
123 FIFTH AVENUE KIRKLAND, WA 98033
(425) 587-3800 www.kirklandwa.gov

DISCRETE INPUT MODULE RACK 1, SLOT 01 - WIRING DIAGRAM (1)

SCADA REPLACEMENT

SUPPLY STATION 1 CONTROL PANEL (S1)

REFERENCE SHEET NO. S1-40.101A

FIELD

S1

(CONTINUED FROM DWG 40.101A)

16 PT. 24VDC DISCRETE INPUT MODULE RACK 1, SLOT 01

BMXDDI1602

24VDC POWER FROM DWG 32.00

U24P

U24C

(0.5A) DF.101.08 U24P

DI.101.08

DI.101.08 9 I8 — SPARE

(0.5A) DF.101.09 U24P

DRY WELL FLOOD SWITCH

DI.101.09

DI.101.09 10 I9 — DRY WELL FLOOD SWITCH ALARM

PANIC ALARM

(0.5A) DF.101.10 U24P

DI.101.10

DI.101.10 11 I10 — PANIC ALARM

(0.5A) DF.101.11 U24P

DI.101.11

DI.101.11 12 I11 — SPARE

CR-PF

DI.101.12 13 I12 — 120VAC CONTROL POWER FAIL

UPS

3.1

DI.101.13 14 I13 — 24VDC CONTROL POWER FAIL

3.3

DI.101.14 15 I14 — DC UPS ON BATTERY

3.2

DI.101.15 16 I15 — DC UPS ALARM

24C

17 0VDC

19 0VDC

24P

18 +24VDC

20 +24VDC

U24P

U24C

Know what's below. Call 811 before you dig.

DATE	NO.	REVISION	BY
X/X/X	0	BID SET	

APPROVED BY:

Rob English, PE

DATE: 3/3/2026

Ben Mahony	DESIGNED BY	2/26/2026 DATE
Ben Mahony	DRAWN BY	2/26/2026 DATE
I-Wen Yang, PE	REVIEWED BY	2/26/2026 DATE

CITY OF KIRKLAND

DEPARTMENT OF PUBLIC WORKS
123 FIFTH AVENUE KIRKLAND, WA 98033
(425) 587-3800 www.kirklandwa.gov

DISCRETE INPUT MODULE RACK 1, SLOT 01 - WIRING DIAGRAM (2)

SCADA REPLACEMENT

SUPPLY STATION 1 CONTROL PANEL (S1)

REFERENCE SHEET NO. S1-40.101B

SHEET 114 of 366

FIELD | S1

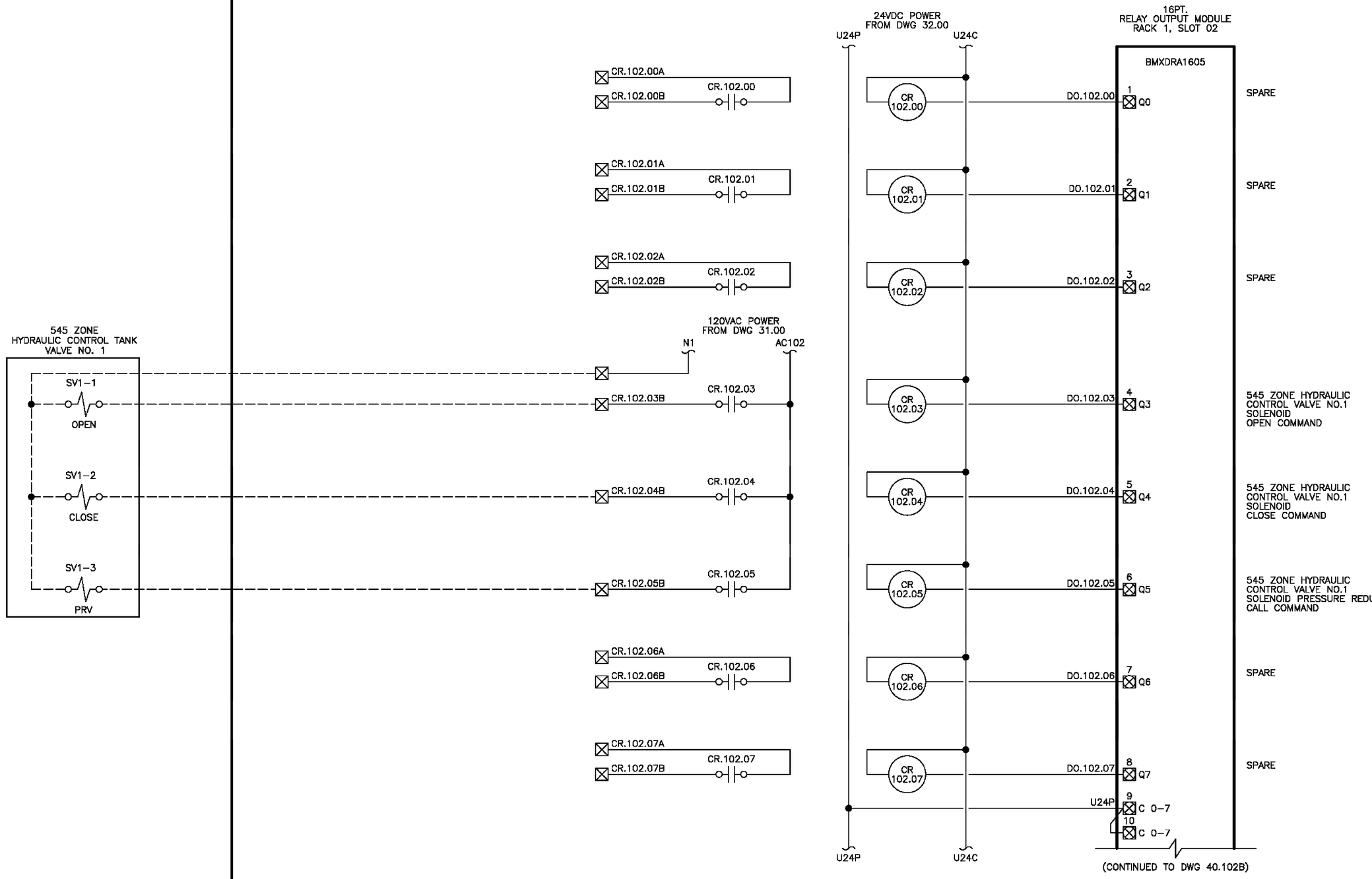

Know what's below. Call 811 before you dig.

DATE	NO.	REVISION	BY
X/X/X	0	BID SET	

APPROVED BY:

Rob English, PE

DATE: 3/3/2026

Ben Mahony (DESIGNED BY)	2/26/2026 (DATE)
Ben Mahony (DRAWN BY)	2/26/2026 (DATE)
I-Wen Yang, PE (REVIEWED BY)	2/26/2026 (DATE)

CITY OF KIRKLAND

DEPARTMENT OF PUBLIC WORKS
123 FIFTH AVENUE KIRKLAND, WA 98033
(425) 587-3800 www.kirklandwa.gov

DISCRETE INPUT MODULE RACK 1, SLOT 02 - WIRING DIAGRAM (1)

SCADA REPLACEMENT

SUPPLY STATION 1 CONTROL PANEL (S1)

REFERENCE SHEET NO.
S1-40, 102A

SHEET 115 of 366

FIELD	S1

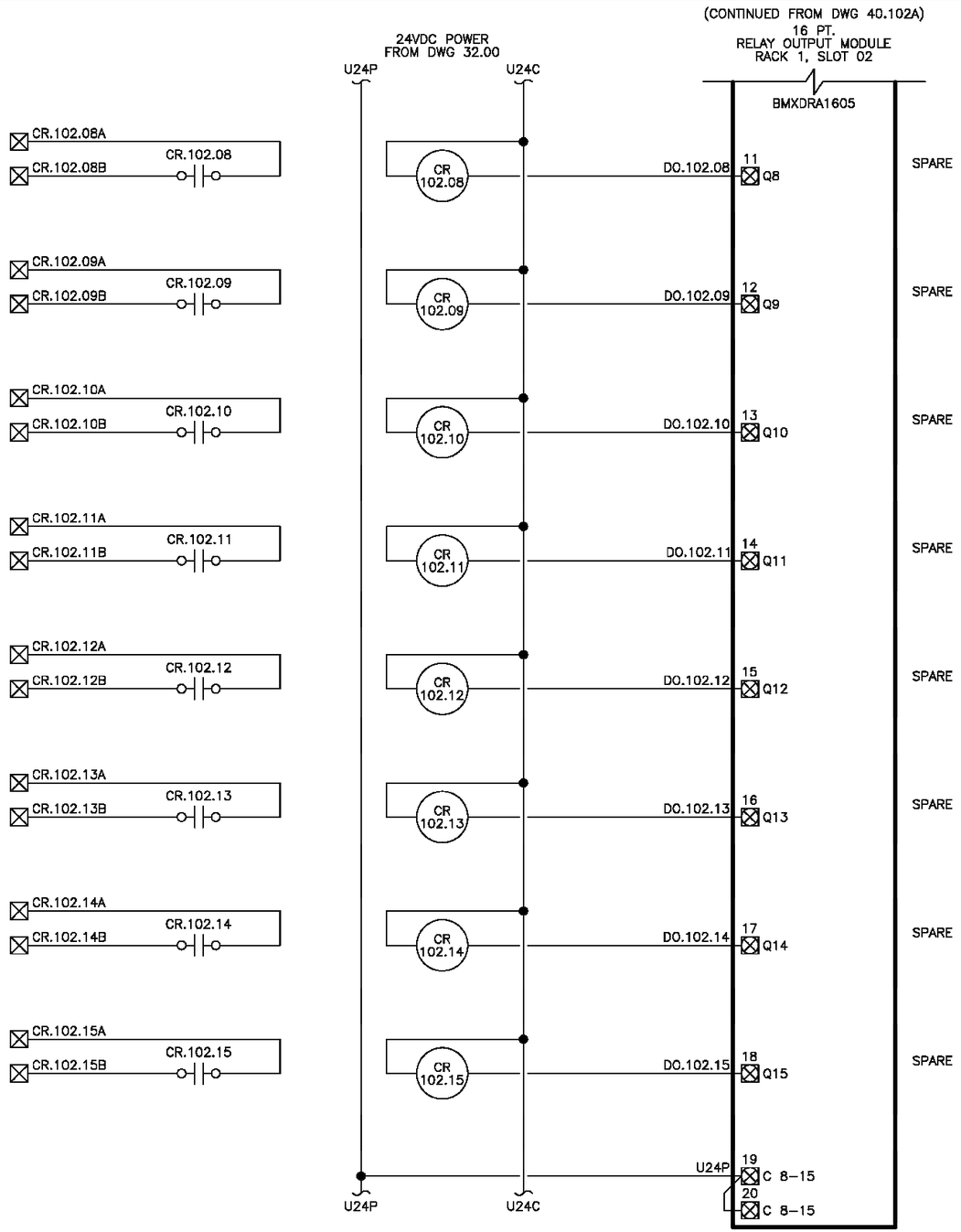

NO.	DATE	REVISION	BY
0	X/X/X	BID SET	

Know what's below. Call 811 before you dig.

APPROVED BY:

Rob English, PE

DATE: 3/3/2026

Ben Mahony	DESIGNED BY	2/26/2026 DATE
Ben Mahony	DRAWN BY	2/26/2026 DATE
I-Wen Yang, PE	REVIEWED BY	2/26/2026 DATE

CITY OF KIRKLAND

DEPARTMENT OF PUBLIC WORKS
123 FIFTH AVENUE KIRKLAND, WA 98033
(425) 587–3800 www.kirklandwa.gov

DISCRETE INPUT MODULE RACK 1, SLOT 02 - WIRING DIAGRAM (2)

SCADA REPLACEMENT

SUPPLY STATION 1 CONTROL PANEL (S1)

REFERENCE SHEET NO. S1-40.102B

SHEET 116 of 366

FIELD | S1

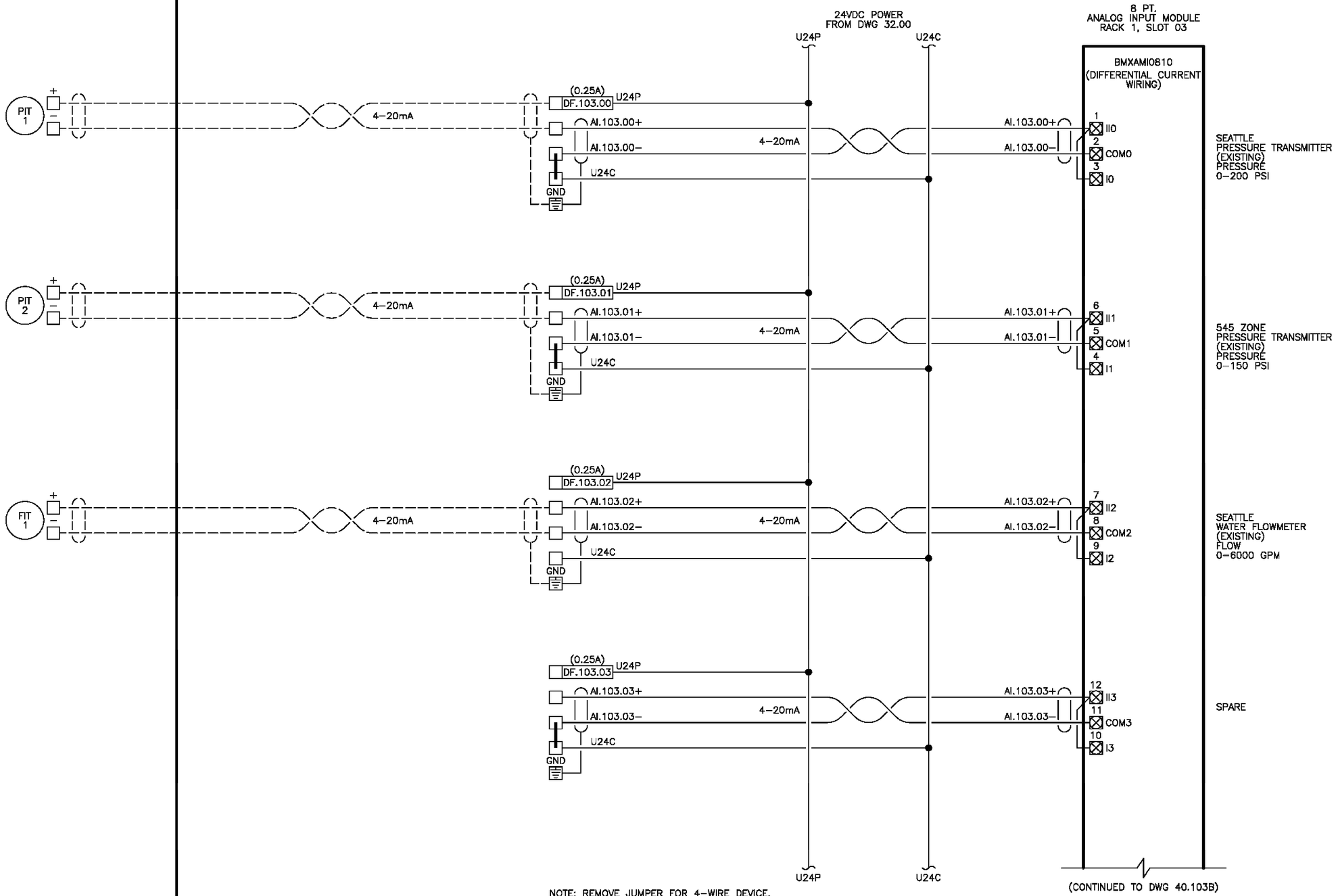

NOTE: REMOVE JUMPER FOR 4–WIRE DEVICE.

Know what's below. Call 811 before you dig.

DATE	NO.	REVISION	BY
X/X/X	0	BID SET	

APPROVED BY:

Rob English, PE

DATE: 3/3/2026

Ben Mahony 2/26/2026
DESIGNED BY DATE

Ben Mahony 2/26/2026
DRAWN BY DATE

I-Wen Yang, PE 2/26/2026
REVIEWED BY DATE

CITY OF KIRKLAND WASHINGTON

CITY OF KIRKLAND
DEPARTMENT OF PUBLIC WORKS
123 FIFTH AVENUE KIRKLAND, WA 98033
(425) 587–3800 www.kirklandwa.gov

DISCRETE INPUT MODULE RACK 1, SLOT 03 - WIRING DIAGRAM (1)

SCADA REPLACEMENT

SUPPLY STATION 1 CONTROL PANEL (S1)

REFERENCE SHEET NO.
S1-40.
103A

SHEET
117
of
366

FIELD

S1

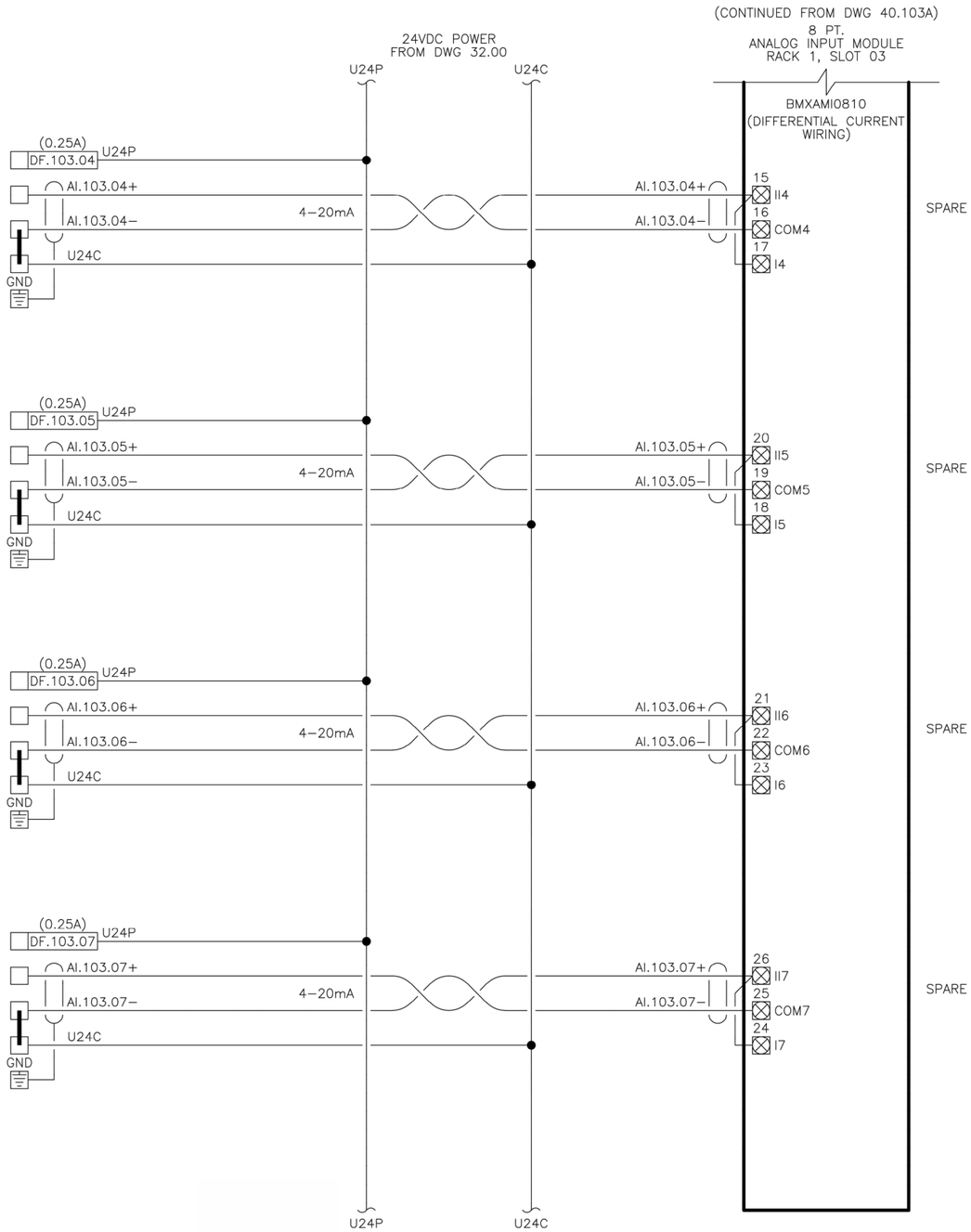

NOTE: REMOVE JUMPER FOR 4–WIRE DEVICE.

DATE	NO.	REVISION	BY
X/X/X	0	BID SET	

APPROVED BY:

Rob English, PE

DATE: 3/3/2026

Ben Mahony (DESIGNED BY)	2/26/2026 (DATE)
Ben Mahony (DRAWN BY)	2/26/2026 (DATE)
I-Wen Yang, PE (REVIEWED BY)	2/26/2026 (DATE)

CITY OF KIRKLAND
DEPARTMENT OF PUBLIC WORKS
123 FIFTH AVENUE KIRKLAND, WA 98033
(425) 587–3800 www.kirklandwa.gov

DISCRETE INPUT MODULE RACK 1, SLOT 03 - WIRING DIAGRAM (2)

SCADA REPLACEMENT

SUPPLY STATION 1 CONTROL PANEL (S1)

REFERENCE SHEET NO. S1-40. 103B

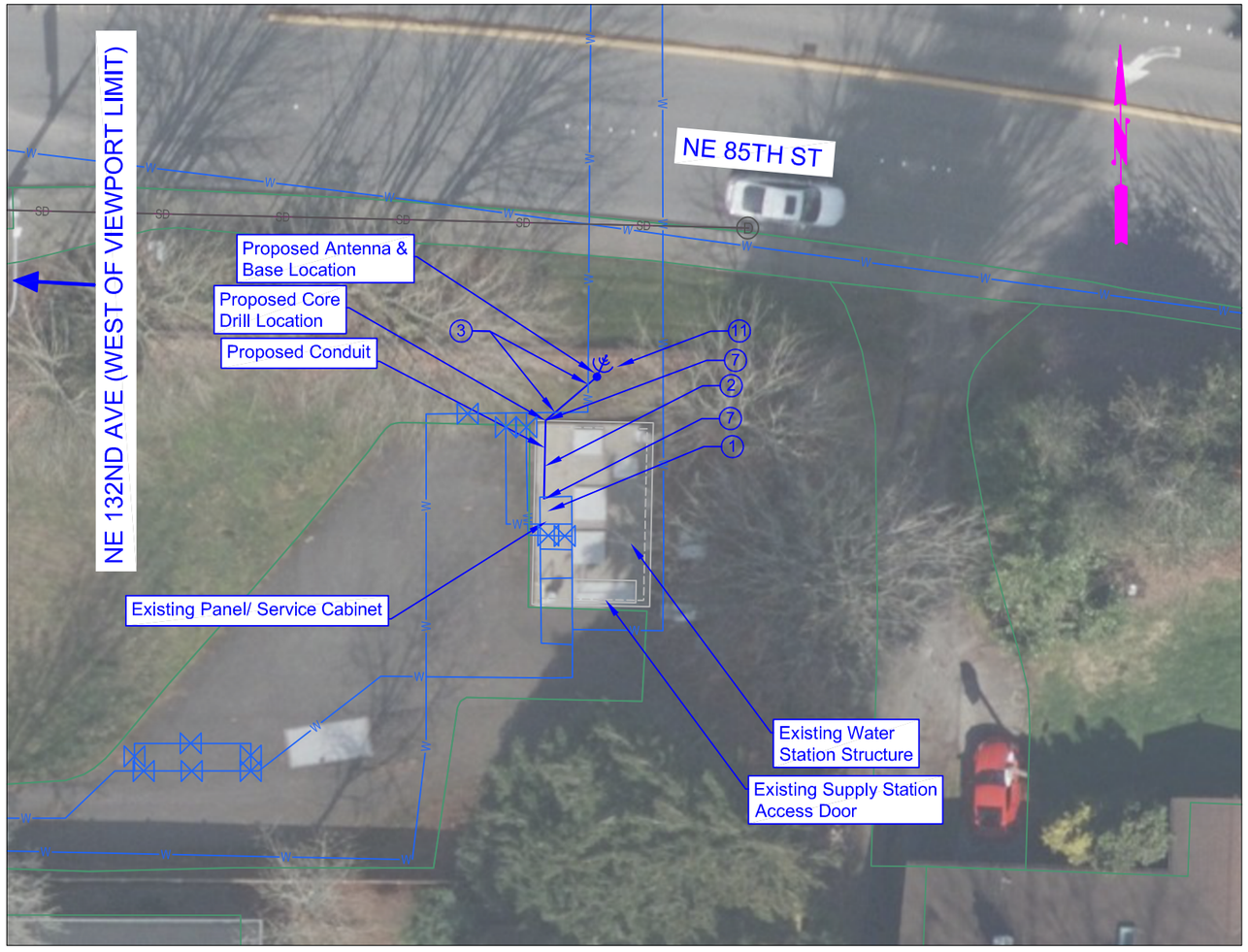

SITE: S2
UTILITY: Water
PROJECT ADDRESS: 13205 NE 85th St, Kirkland WA 98033

GIS DISCLAIMER:
The as-built and utility information shown in the project plans are based on the City of Kirkland's available GIS information. Thus, the contractor shall field verify all of the proposed conditions and limits. Additionally, the contractor shall call for utility locates at least 48 hours prior to any trenching or excavation work to field verify that no utility conflicts exist with the proposed excavation limits.

20 10 0 20 40

A NORTH-EAST VIEW
NOT TO SCALE

B EAST VIEW
NOT TO SCALE

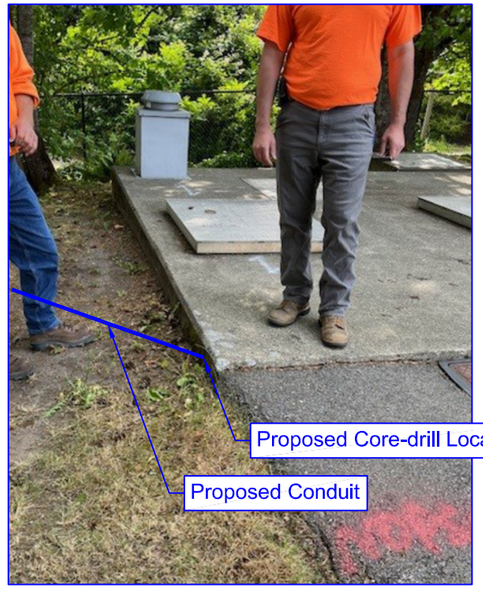

CONSTRUCTION NOTES:

1. TO REPLACE PANEL AND UPDATE THE SOFTWARE IN THE SERVICE CABINET PER THE SITE-SPECIFIC BILL OF MATERIALS (BOM'S).
2. TO INSTALL 4-INCH SCH. 40 CONDUIT PIPING AND REPLACE BACKFILL WITH NATIVE SOILS, IN KIND.
3. TO PROTECT EXISTING BURIED UTILITY, SEE GENERAL NOTE 1.
4. TO PROTECT EXISTING BURIED POWER AND/ OR FRANCHISE UTILITY, SEE GENERAL NOTE 1.
5. TO INSTALL FIBER CABLE THROUGH EXISTING FIBER CONDUIT.
6. TO REMOVE AND REPLACE CONCRETE SIDEWALK.
7. TO CORE-DRILL HOLE(S) INTO EXISTING STRUCTURE AND/ OR EXISTING SERVICE CABINET.
8. TO INSTALL EXTERNAL MOUNTED LOW-PROFILE (4 FT HIGH POLE HEIGHT) ANTENNA PER ANTENNA STANDARD DETAIL.
9. TO INSTALL EXTERNAL MOUNTED HIGH-PROFILE (20 FT HIGH POLE HEIGHT) ANTENNA PER ANTENNA STANDARD DETAIL.
10. TO INSTALL INTERNAL PANEL-MOUNTED LOW-PROFILE (2 FT HIGH POLE HEIGHT) ANTENNA PER ANTENNA STANDARD DETAIL.
11. TO INSTALL FULL-PROFILE (20 FT HIGH POLE HEIGHT) ANTENNA WITH A CONCRETE ANCHOR PER ANTENNA AND ANTENNA BASE STANDARD DETAIL.
12. TO SALVAGE AND REUSE EXISTING ANTENNA STRUCTURE AND INSTALL PROPOSED ANTENNA EQUIPMENT.
13. TO REMOVE EXISTING YAGI ANTENNA ON THE EXISTING ANTENNA POLE STRUCTURE.
14. TO INSTALL NEMA 4X ENCLOSURE ON PROPOSED OR EXISTING ANTENNA POLE STRUCTURE WITH THE NEW MODEM INSIDE THE ENCLOSURE.
15. TO INSTALL FIBER CONNECTION IN EXISTING FIBER CONDUIT.
16. TO INSTALL FIBER CONNECTION IN EXISTING SIGNAL CABINET/ JUNCTION BOX.

GENERAL NOTES:

1. UTILITY LOCATIONS SHOWN ARE APPROXIMATE AND BASED ON AVAILABLE GIS, FIELD OBSERVATIONS, AND UTILITY LOCATES. CONTRACTOR SHALL VERIFY PRIOR TO CONSTRUCTION.
2. SEWER STRUCTURE DATA AND LOCATIONS SHOWN ARE APPROXIMATE BASED ON AVAILABLE CITY GIS AND AS-BUILT RECORDS. THE CONTRACTOR SHALL CONDUCT PIPE AND SITE VERIFICATION PRIOR TO PROCEEDING WITH CONSTRUCTION.
3. CITY SHALL COORDINATE AND SECURE ANY NECESSARY AGREEMENTS AND/ OR EASEMENT WITH PROPERTY PRIOR TO ANY WORK ON PRIVATE PROPERTY. NO WORK SHALL BE PERFORMED OUTSIDE OF THE RIGHT-OF-WAY WITHOUT PRIOR AUTHORIZATION BY THE ENGINEER.
4. IF DISTURBED, HMA PAVEMENT SECTION SHALL BE REPLACED PER PRE-APPROVED PLAN NO. CK-R.12.

LEGEND:

- PROPOSED CONDUIT INSTALLATION
- PROPOSED FIBER INSTALLATION
- PROPOSED ANTENNA & BASE LOCATION
- PROPOSED REMOVAL/ REPLACEMENT OF SIDEWALK
- EXISTING STRUCTURE
- EXISTING STRUCTURE (HIDDEN)
- SS — EXISTING SANITARY SEWER UTILITY
- EXISTING SANITARY SEWER MANHOLE
- SD — EXISTING STORM DRAIN PIPE
- EXISTING EXISTING STORM DRAIN CATCH BASIN
- W — EXISTING EXISTING WATER PIPE UTILITY
- EXISTING EXISTING WATER METER UTILITY
- EXISTING WATER HYDRANT
- EXISTING WATER VALVE UTILITY
- RoW — EXISTING RIGHT-OF-WAY LINE
- PL — EXISTING EXISTING PROPERTY LINE
- GAS — EXISTING GAS UTILITY
- EXISTING GAS METER UTILITY
- X — SITE IMAGE REF. SEE NOTE X

811 Know what's below. Call 811 before you dig.

DATE	NO.	REVISION	BY
X/X/X	0	BID SET	

APPROVED BY:

Rob English, PE

DATE: 3/3/2026

Ben Mahony (DESIGNED BY)	2/26/2026 (DATE)
Ben Mahony (DRAWN BY)	2/26/2026 (DATE)
I-Wen Yang, PE (REVIEWED BY)	2/26/2026 (DATE)

CITY OF KIRKLAND
DEPARTMENT OF PUBLIC WORKS
123 FIFTH AVENUE KIRKLAND, WA 98033
(425) 587–3800 www.kirklandwa.gov

SCADA REPLACEMENT

S2 SITE IMPROVEMENTS

REFERENCE SHEET NO. S2_IMP_01

SUPPLY STATION S2					
PartID	Qty	Specification	Manufacturer Part Number	Description	Manufacturer
117G	1	No Equal	CP3630	Concept Enclosure Backpan, Painted Mild Steel, 34.20" x 28.20"	Hoffman
143B	1	Or Approved Equal	111019-00	Temperature Control Switch, N.O. Contact for fan control or high temperature alarm, Adjustable Set Point Range 32-140 deg.F, 15-amp rated contact at 120VAC	Stego
200B	ASRQ	Or Approved Equal	3044102	Terminal Block, UT4, Gray, 26-10 AWG, 600V, 32A	Phoenix Contact
200E	ASRQ	Or Approved Equal	3046139	Knife-disconnect terminal block, nom. voltage: 500 V, nominal current: 20 A, connection method: Screw connection, Rated cross section: 4 mm2, cross section: 0.14 mm2 - 6 mm2, mounting: NS 35/7,5, NS 35/15, color: gray	Phoenix Contact
202A	ASRQ	Or Approved Equal	3047028	Terminal Block End Barrier, UT2.5/10 Terminals	Phoenix Contact
203A	ASRQ	Or Approved Equal	0800886	Terminal Block End Clamp, 9.5mm Wide	Phoenix Contact
210A	ASRQ	Or Approved Equal	1492-WFB424	Fuse Terminal Block, 5x20mm Fuse, Black, Red LED Indicator, 30-12 AWG, 15A @ 10-57VAC/VDC	Allen-Bradley
221A	ASRQ	Or Approved Equal	S500-250-R	Fuse, 0.25 A, Glass Body, 5x20mm, Fast Acting, 250VAC/60VDC	Bussmann
221B	ASRQ	Or Approved Equal	S500-500-R	Fuse, 0.5 A, Glass Body, 5x20mm, Fast Acting, 250VAC/60VDC	Bussmann
221D	ASRQ	Or Approved Equal	S500-2-R	Fuse, 2 A, Glass Body, 5x20mm, Fast Acting, 250VAC/60VDC	Bussmann
241C	ASRQ	Or Approved Equal	1489-M1C050	Miniature Circuit Breaker, 1-Pole, 5A, Din Rail Mount, 277VAC/48VDC Max, Trip Curve C, 10kA, UL 489 Listed	Allen-Bradley
241E	ASRQ	Or Approved Equal	1489-M1C100	Miniature Circuit Breaker, 1-Pole, 10A, Din Rail Mount, 277VAC/48VDC Max, Trip Curve C, 10kA, UL 489 Listed	Allen-Bradley
241H	ASRQ	Or Approved Equal	1489-M1C200	Miniature Circuit Breaker, 1-Pole, 20A, Din Rail Mount, 277VAC/48VDC Max, Trip Curve C, 10kA, UL 489 Listed	Allen-Bradley
245A	1	Or Approved Equal	2907918	Surge Arrester, Pluggable Type, 150VAC/DC, 26A (20A for UL Applications)	Phoenix Contact
260A	1	Or Approved Equal	UGB2/0-414-6	Ground Bus Bar, Tin Plated Copper, 5" x 5/8", 14 - 4 AWG, 6-port	Panduit
290A	1	Or Approved Equal	2907161	UPS with integrated power supply, USB (Modbus/RTU), DIN rail mounting, Push-in connection, input: 1-phase, output: 24 V DC / 10 A	Phoenix Contact
290B	1	Or Approved Equal	1348516	Energy storage, VRLA-AGM, 24 V DC, 20 Ah, automatic detection and communication with QUINT UPS-IQ	Phoenix Contact
307B	ASRQ	Or Approved Equal	700-HK32Z24-4	Slim Line Control Relay, DPDT, 8A Contacts, 24 VDC Coil, Pilot Light	Allen-Bradley
307C	ASRQ	Or Approved Equal	700-HK32A1-4	Slim Line Control Relay, DPDT, 8A Contacts, 120 VAC Coil, Pilot Light	Allen-Bradley
307D	ASRQ	Or Approved Equal	700-HN122	Slim Line Control Relay Base, Mini 8-Blade Base Socket, Screw Terminals	Allen-Bradley
320A	1	Or Approved Equal	0804155	Receptacle, 15A/125VAC, DIN rail mounting, simplex	Phoenix Contact
322A	1	Or Approved Equal	5600462	Receptacle, GFCI, 15A/125VAC, DIN rail mounting, duplex	Phoenix Contact
430A	1	No Equal	IE-3100-8T2C-E	Cisco Catalyst IE3100 Rugged Series - Switch - 8 x 10/100/1000 + 2 x combo Gigabit - DIN rail mountable - PACL, VACL	Cisco
430B	1	No Equal	SD-IE-1GB	Cisco - Flash memory card - 1 GB - SD	Cisco
455A	1	No Equal	cMT3092Xv2	Smart HMI, 9.7", Resolution 1024 x 768, Dark Grey Bezel, 1.6 GHz CPU, 4 GB Flash Memory, 1 GB DRAM, UL Listed, Ethernet, 24VDC	Maple Systems
470A	1	No Equal	MAX-BR1-MINI-LTE-US-T-M-PRM	Peplink MAX BR1 Mini Core LTE - US - No WiFi - No GPS - AC Adapter & 2x SMA Cellular Anetenna Connectors	Peplink
470B	1	No Equal		DC Power Cable ES/GX/MP/RV/LX/IBR	Peplink
470C	1	No Equal	ACW-DIN-BR1-MINI	DIN Rail mount kit	Peplink
471A	2	Or Approved Equal	POLTSX-NFF	Cell Surge Arrestor 0.698-2.7GHz DC Block Coax Protect, N-Female/N-Female connector	PolyPhaser
471B	ASRQ	Or Approved Equal	TIMLMR-400-DB	Watertight LMR400 Cable Black PE Jacket	Times Microwave
471C	ASRQ	Or Approved Equal	R/FCOMP-NM-400	Conn, N-Male Compression Style for Plenum LMR400 Cable	RF Industries
471D	2	Or Approved Equal	ANXTRA6927M3PB-001	3G/4G Multi-Band Phantom Antenna for 698-960/1700-2700 MHz. Black. 3.3" Radome. N Female.	Laird
471E	2	Or Approved Equal	CUSTOM BRACKET	Stainless Steel Custom Bracket - 14"x 02"	Custom
610D	1	No Equal	BMXP342020	Modicon M340 PLC Processor, 1 Modbus Serial Port, 1 Ethernet Port, Max 1024 Discrete & 256 Analog IO	Schneider Electric
611B	1	No Equal	BMXXBP0600	Modicon X80 I/O Platform X-Bus Rack, 6 Slots	Schneider Electric
612A	1	No Equal	BMXCPS2010	Modicon X80 I/O Platform Power Supply, 17W Output, 24 VDC	Schneider Electric
614B	2	No Equal	BMXDDI1602	Modicon X80 Discrete Input Card, 16 Points, 24 VDC	Schneider Electric
615E	1	No Equal	BMXDRA1605	Modicon X80 Relay Output Card, 16 Points, 24 VDC / 24-240 VAC, 2A Max	Schneider Electric
616C	1	No Equal	BMXAMI0810	Modicon X80 Analog Input Module, 8 Points, Voltage/Current, Isolated	Schneider Electric
619C	3	No Equal	BMXFTB2010	Modicon X80 Removable Terminal Block, 20-Way, Screw Terminals	Schneider Electric
619E	1	No Equal	BMXFTB2800	Modicon X80 Removable Terminal Block, 28-Way, Screw Terminals	Schneider Electric

811 Know what's below. Call 811 before you dig.

DATE	NO.	REVISION	BY
X/X/X	0	BID SET	

APPROVED BY:

Rob English, PE

DATE: 3/3/2026

Ben Mahony 2/26/2026
DESIGNED BY DATE

Ben Mahony 2/26/2026
DRAWN BY DATE

I-Wen Yang, PE 2/26/2026
REVIEWED BY DATE

CITY OF KIRKLAND
DEPARTMENT OF PUBLIC WORKS
123 FIFTH AVENUE KIRKLAND, WA 98033
(425) 587–3800 www.kirklandwa.gov

SCADA REPLACEMENT

S2 - BILL OF MATERIALS

REFERENCE SHEET NO. S2_BM_01

		PANEL NAME:	SUPPLY STATION 2															
		PANEL NUMBER:	S2															
TAG Prefix	Loop Desc. 1	Loop Desc. 2	LOOP #	PLC/HMI Tag	DESCRIPTION 1	DESCRIPTION 2	DESCRIPTION 3	FUNCTION	TYPE	Rack	Slot	Point	Units	Min	Max	P&ID Dwg	NOTES
			-		PUMP No. 1			IN HAND	DI	1	1	0					Moved from original IO list - 4/4/25 KD
			-		PUMP No. 1			IN AUTO	DI	1	1	1					Moved from original IO list - 4/4/25 KD
			-		PUMP No. 1			RUNNING	DI	1	1	2					Moved from original IO list - 4/4/25 KD
			-		Spare				DI	1	1	3					
			-		Spare				DI	1	1	4					
			-		Spare				DI	1	1	5					
			-		Spare				DI	1	1	6					
			-		INTRUSION			ALARM	DI	1	1	7					Moved from original IO list - 4/4/25 KD
			-		DRY WELL	FLOOD SWITCH		ALARM	DI	1	1	8					Moved from original IO list - 4/4/25 KD
			-		Spare				DI	1	1	9					
			-		Spare				DI	1	1	10					
			-		Spare				DI	1	1	11					
			-		SMOKE			ALARM	DI	1	1	12					Moved from original IO list - 4/4/25 KD
			-		ROOM FAN THERMOSTAT			ALARM	DI	1	1	13					Moved from original IO list - 4/4/25 KD
			-		PANIC			ALARM	DI	1	1	14					
			-		Spare				DI	1	1	15					
			-		PUMP No. 2			IN HAND	DI	1	2	0					Moved from original IO list - 4/4/25 KD
			-		PUMP No. 2			IN AUTO	DI	1	2	1					Moved from original IO list - 4/4/25 KD
			-		PUMP No. 2			RUNNING	DI	1	2	2					Moved from original IO list - 4/4/25 KD
			-		Spare				DI	1	2	3					
			-		Spare				DI	1	2	4					
			-		Spare				DI	1	2	5					
			-		Spare				DI	1	2	6					
			-		Spare				DI	1	2	7					
			-		10" VALVE			FULLY CLOSED	DI	1	2	8					Moved from original IO list - 4/4/25 KD
			-		12" VALVE			FULLY CLOSED	DI	1	2	9					
			-		Spare				DI	1	2	10					
			-		Spare				DI	1	2	11					
			-		120VAC CONTROL POWER			FAIL	DI	1	2	12					Moved from original IO list - 4/4/25 KD
			-		24VDC CONTROL POWER			FAIL	DI	1	2	13					Moved from original IO list - 4/4/25 KD
			-		DC UPS			ON BATTERY	DI	1	2	14					Moved from original IO list - 4/4/25 KD
			-		DC UPS			ALARM	DI	1	2	15					Moved from original IO list - 4/4/25 KD
			-		PUMP No. 1			RUN COMMAND	DO	1	3	0					
			-		PUMP No. 2			RUN COMMAND	DO	1	3	1					
			-		VENTILATION FAN			RUN COMMAND	DO	1	3	2					
			-		545 ZONE HYDRAULIC	CONTROL VALVE No.1	SOLENOID	OPEN COMMAND	DO	1	3	3					
			-		545 ZONE HYDRAULIC	CONTROL VALVE No.1	SOLENOID	CLOSE COMMAND	DO	1	3	4					
			-		545 ZONE HYDRAULIC	CONTROL VALVE No.1	SOLENOID PRESSURE REDUCING	CALL COMMAND	DO	1	3	5					
			-		545 ZONE HYDRAULIC	CONTROL VALVE No.2	SOLENOID	OPEN COMMAND	DO	1	3	6					
			-		545 ZONE HYDRAULIC	CONTROL VALVE No.2	SOLENOID	CLOSE COMMAND	DO	1	3	7					
			-		545 ZONE HYDRAULIC	CONTROL VALVE No.2	SOLENOID PRESSURE REDUCING	CALL COMMAND	DO	1	3	8					
			-		PUMP No. 1			LOCKOUT	DO	1	3	9					
			-		PUMP No. 2			LOCKOUT	DO	1	3	10					
			-		Spare				DO	1	3	11					
			-		Spare				DO	1	3	12					
			-		Spare				DO	1	3	13					
			-		Spare				DO	1	3	14					
			-		Spare				DO	1	3	15					
			-		SEATTLE	PRESSURE TRANSMITTER	(EXISTING)	PRESSURE	AI	1	4	0	PSI	0	400		

811 Know what's below. Call 811 before you dig.

DATE	NO.	REVISION	BY
X/X/X	0	BID SET	

APPROVED BY:

Rob English, PE

DATE: 3/3/2026

Ben Mahony (DESIGNED BY)	2/26/2026 (DATE)
Ben Mahony (DRAWN BY)	2/26/2026 (DATE)
I-Wen Yang, PE (REVIEWED BY)	2/26/2026 (DATE)

CITY OF KIRKLAND WASHINGTON

CITY OF KIRKLAND
DEPARTMENT OF PUBLIC WORKS
123 FIFTH AVENUE KIRKLAND, WA 98033
(425) 587–3800 www.kirklandwa.gov

SCADA REPLACEMENT

S2 - I/O LIST (1)

REFERENCE SHEET NO. S2_IO_01

		PANEL NAME:	SUPPLY STATION 2															
		PANEL NUMBER:	S2															
TAG Prefix	Loop Desc. 1	Loop Desc. 2	LOOP #	PLC/HMI Tag	DESCRIPTION 1	DESCRIPTION 2	DESCRIPTION 3	FUNCTION	TYPE	Rack	Slot	Point	Units	Min	Max	P&ID Dwg	NOTES
			-		545 ZONE	PRESSURE TRANSMITTER	(EXISTING)	PRESSURE	AI	1	4	1	PSI	0	100		
			-		SEATTLE	FLOW TRANSMITTER	(EXISTING)	FLOW	AI	1	4	2	GPM	0	10000		
			-		650 ZONE	FLOW TRANSMITTER	(FUTURE)	FLOW	AI	1	4	3	GPM	0	X		
			-		650 ZONE	PRESSURE TRANSMITTER	(FUTURE)	PRESSURE	AI	1	4	4	PSI	0	X		
			-		545 ZONE	PRESSURE TRANSMITTER		PRESSURE	AI	1	4	5	PSI	0	100		
			-		Spare				AI	1	4	6					
			-		Spare				AI	1	4	7					

Know what's below. Call 811 before you dig.

DATE	NO.	REVISION	BY
X/X/X	0	BID SET	

APPROVED BY:

Rob English, PE

DATE: 3/3/2026

Ben Mahony	2/26/2026
DESIGNED BY	DATE
Ben Mahony	2/26/2026
DRAWN BY	DATE
I-Wen Yang, PE	2/26/2026
REVIEWED BY	DATE

CITY OF KIRKLAND

DEPARTMENT OF PUBLIC WORKS
123 FIFTH AVENUE KIRKLAND, WA 98033
(425) 587–3800 www.kirklandwa.gov

SCADA REPLACEMENT

S2 - I/O LIST (2)

REFERENCE SHEET NO.
S2_IO_02

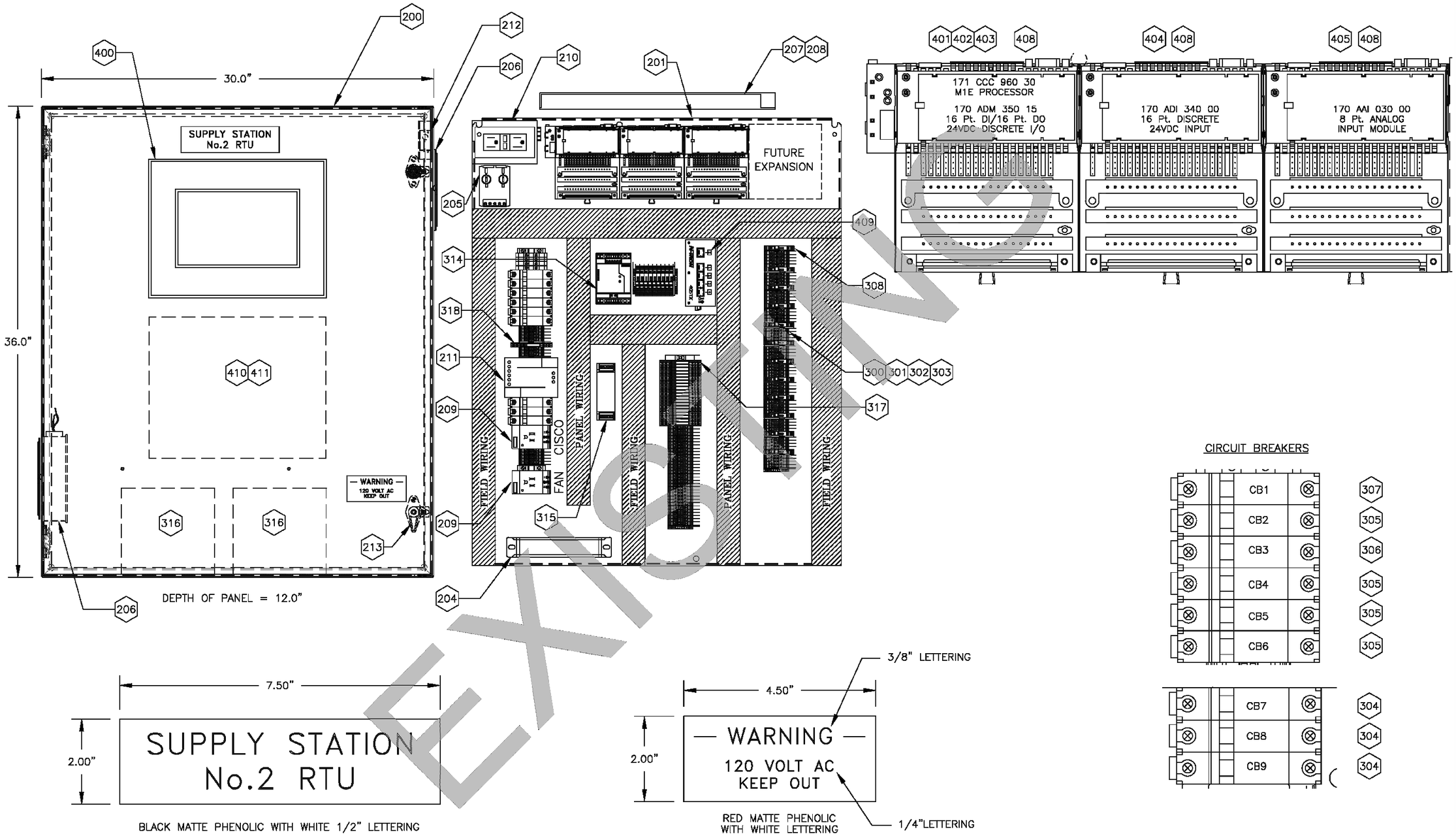

EXISTING

Know what's below. Call 811 before you dig.

DATE	NO.	REVISION	BY
X/X/X	0	BID SET	

APPROVED BY:

Rob English, PE

DATE: 3/3/2026

Ben Mahony	DESIGNED BY	2/26/2026 DATE
Ben Mahony	DRAWN BY	2/26/2026 DATE
I-Wen Yang, PE	REVIEWED BY	2/26/2026 DATE

CITY OF KIRKLAND

DEPARTMENT OF PUBLIC WORKS
123 FIFTH AVENUE KIRKLAND, WA 98033
(425) 587-3800 www.kirklandwa.gov

TELEMETRY PANEL, PANEL LAYOUT

SCADA REPLACEMENT

SUPPLY STATION 2 EXISTING CONTROL PANEL (REFERENCE)

REFERENCE SHEET NO. SS2-J01

SHEET 123 of 366

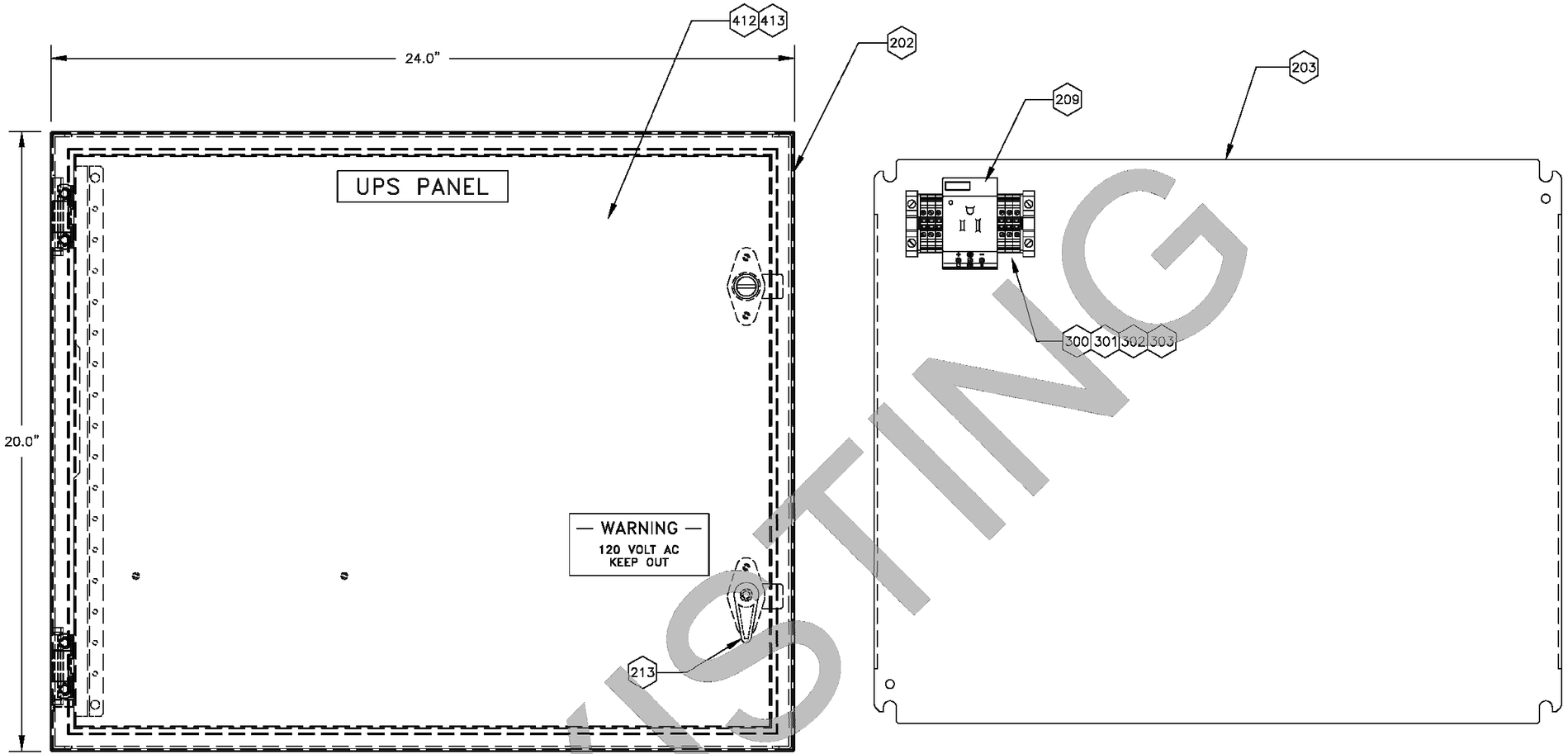

DEPTH OF PANEL = 12.0"

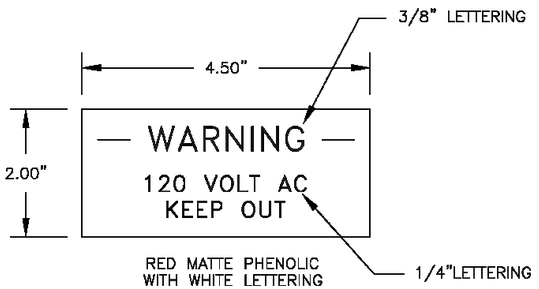

EXISTING

Know what's below. Call 811 before you dig.

DATE	NO.	REVISION	BY
X/X/X	0	BID SET	

APPROVED BY:

Rob English, PE

DATE: 3/3/2026

Ben Mahony	2/26/2026	DESIGNED BY / DATE
Ben Mahony	2/26/2026	DRAWN BY / DATE
I-Wen Yang, PE	2/26/2026	REVIEWED BY / DATE

CITY OF KIRKLAND

DEPARTMENT OF PUBLIC WORKS
123 FIFTH AVENUE KIRKLAND, WA 98033
(425) 587-3800 www.kirklandwa.gov

UPS PANEL, PANEL LAYOUT

SCADA REPLACEMENT

SUPPLY STATION 2 EXISTING CONTROL PANEL (REFERENCE)

REFERENCE SHEET NO.
SS2-J02

SHEET 124 of 366

NOTE: ——— EQUIPMENT AND WIRING BY TSI
— — EQUIPMENT OR WIRING BY OTHERS

GLOSSARY:

s0 – Serial Interface/ DSU/CSU

e0 – Ethernet interface 0

e1 – Ethernet Interface 1

SLT – Spare Slot

DLCI – Frame Relay address

s0.1 – Frame Relay Logical Subinterface

FR PVC – Frame Relay Permanent Virtual Circuit

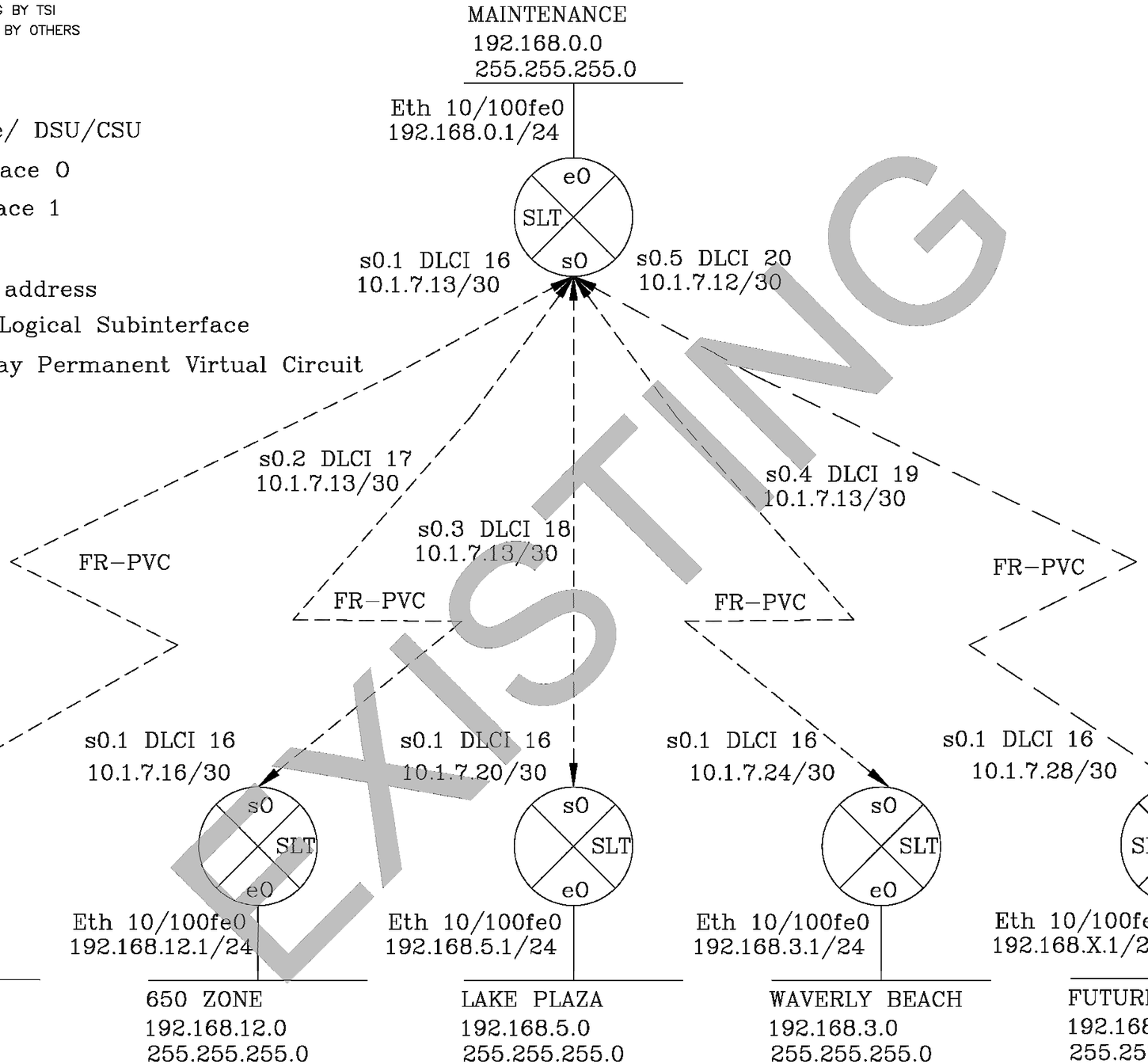

EXISTING

Know what's below. Call 811 before you dig.

DATE	NO.	REVISION	BY
X/X/X	0	BID SET	

APPROVED BY:

Rob English, PE

DATE: 3/3/2026

Ben Mahony	2/26/2026	DESIGNED BY / DATE
Ben Mahony	2/26/2026	DRAWN BY / DATE
I-Wen Yang, PE	2/26/2026	REVIEWED BY / DATE

CITY OF KIRKLAND
DEPARTMENT OF PUBLIC WORKS
123 FIFTH AVENUE KIRKLAND, WA 98033
(425) 587–3800 www.kirklandwa.gov

FRAME RELAY LOGICAL NETWORK DIAGRAM, CISCO ROUTERS
SCADA REPLACEMENT
SUPPLY STATION 2 EXISTING CONTROL PANEL (REFERENCE)

REFERENCE SHEET NO.
SS2-001

SHEET 125 of 366

NOTE: ——— EQUIPMENT AND WIRING BY TSI
— — EQUIPMENT OR WIRING BY OTHERS

GLOSSARY:

s0 – Serial Interface/ DSU/CSU

e0 – Ethernet interface 0

e1 – Ethernet Interface 1

SLT – Spare Slot

DLCI – Frame Relay address

s0.1 – Frame Relay Logical Subinterface

FR PVC – Frame Relay Permanent Virtual Circuit

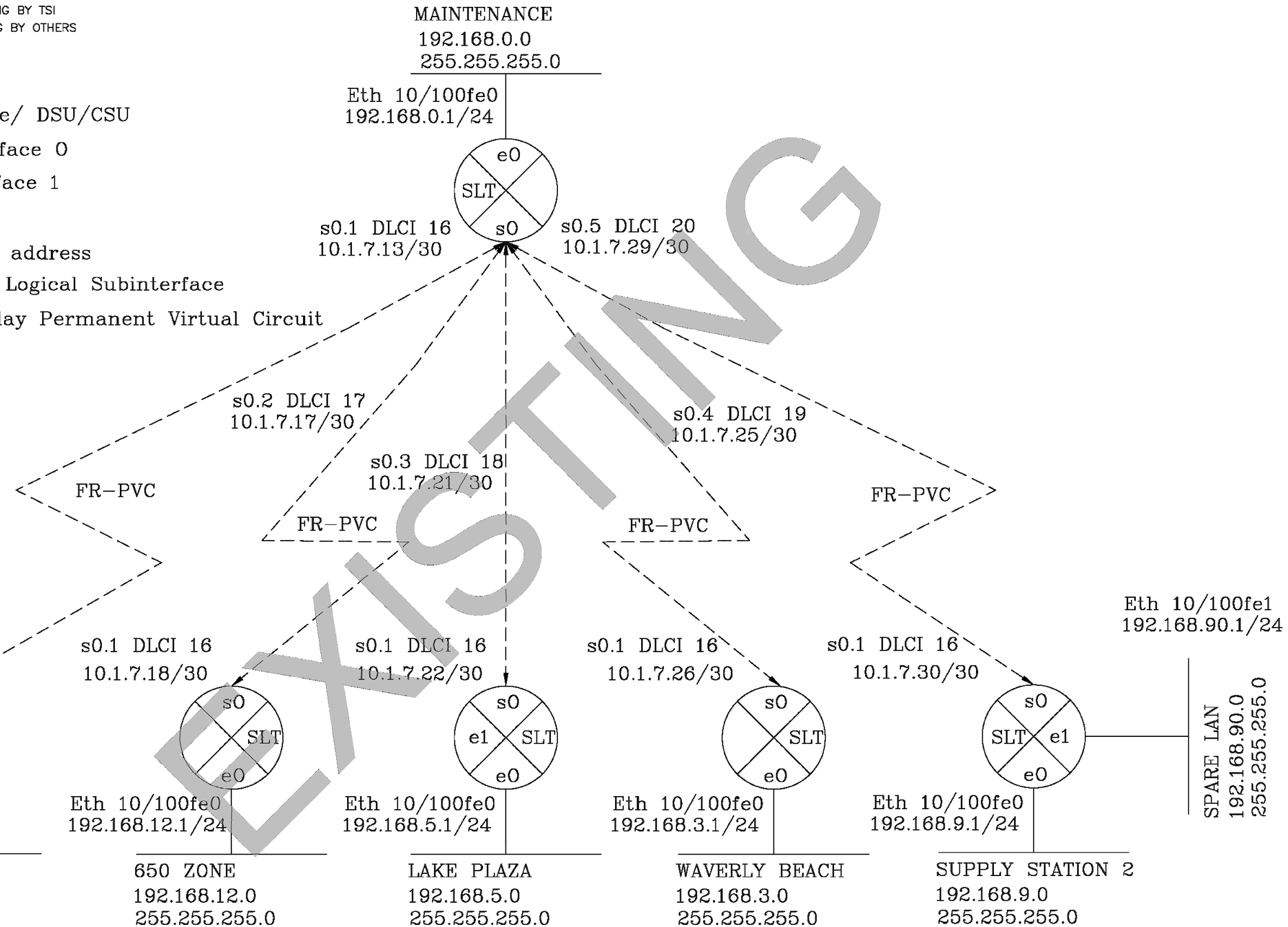

EXISTING

Know what's below. Call 811 before you dig.

DATE	NO.	REVISION	BY
X/X/X	0	BID SET	

APPROVED BY:

Rob English, PE

DATE: 3/3/2026

Ben Mahony	DESIGNED BY	2/26/2026 DATE
Ben Mahony	DRAWN BY	2/26/2026 DATE
I-Wen Yang, PE	REVIEWED BY	2/26/2026 DATE

CITY OF KIRKLAND
DEPARTMENT OF PUBLIC WORKS
123 FIFTH AVENUE KIRKLAND, WA 98033
(425) 587–3800 www.kirklandwa.gov

CISCO ROUTERS, FRAME RELAY LOGICAL NETWORK DIAGRAM

SCADA REPLACEMENT

SUPPLY STATION 2 EXISTING CONTROL PANEL (REFERENCE)

REFERENCE SHEET NO. SS2-B01

SHEET 126 of 366

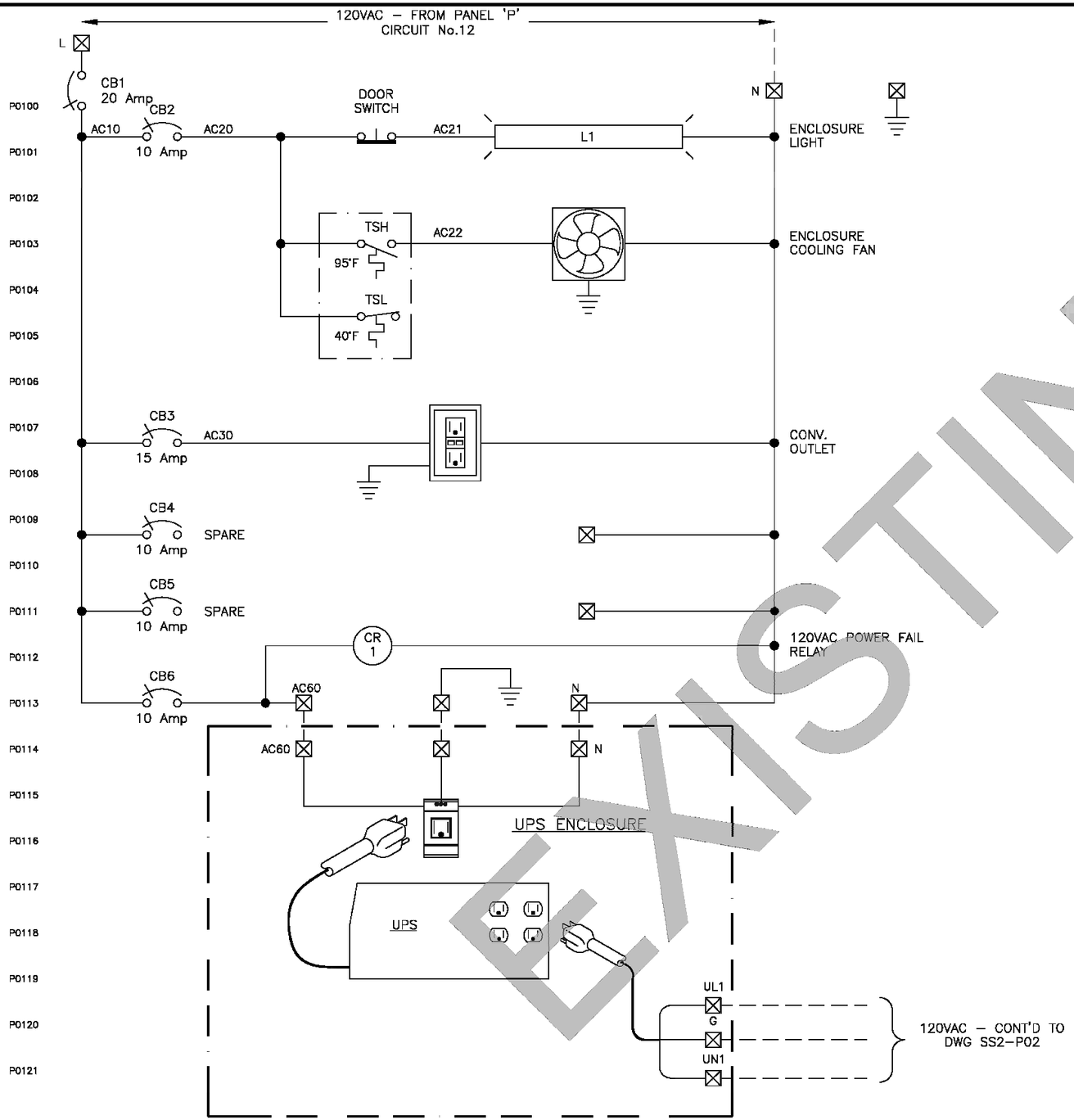

EXISTING

Know what's below. Call 811 before you dig.

DATE	NO.	REVISION	BY
X/X/X	0	BID SET	

APPROVED BY:

Rob English, PE

DATE: 3/3/2026

Ben Mahony	2/26/2026	DESIGNED BY / DATE
Ben Mahony	2/26/2026	DRAWN BY / DATE
I-Wen Yang, PE	2/26/2026	REVIEWED BY / DATE

CITY OF KIRKLAND

DEPARTMENT OF PUBLIC WORKS
123 FIFTH AVENUE KIRKLAND, WA 98033
(425) 587–3800 www.kirklandwa.gov

TELEMETRY PANEL, POWER WIRING DIAGRAM (1)

SCADA REPLACEMENT

SUPPLY STATION 2 EXISTING CONTROL PANEL (REFERENCE)

REFERENCE SHEET NO.
SS2-P01

SHEET
127
of
366

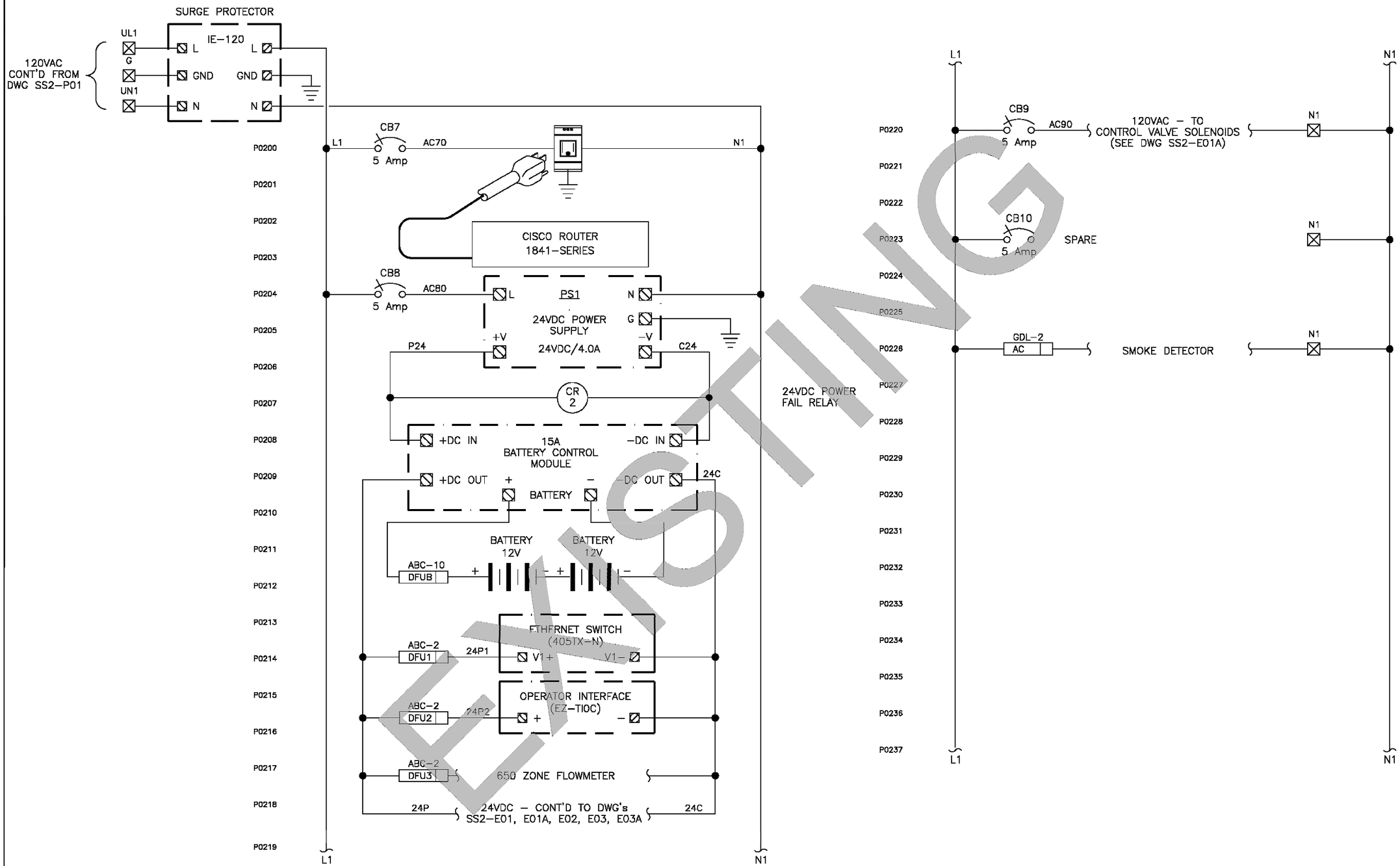

EXISTING

Know what's below. Call 811 before you dig.

DATE	NO.	REVISION	BY
X/X/X	0	BID SET	

APPROVED BY:

Rob English, PE

DATE: 3/3/2026

Ben Mahony	DESIGNED BY	2/26/2026 DATE
Ben Mahony	DRAWN BY	2/26/2026 DATE
I-Wen Yang, PE	REVIEWED BY	2/26/2026 DATE

CITY OF KIRKLAND WASHINGTON

CITY OF KIRKLAND
DEPARTMENT OF PUBLIC WORKS
123 FIFTH AVENUE KIRKLAND, WA 98033
(425) 587-3800 www.kirklandwa.gov

TELEMETRY PANEL, POWER WIRING DIAGRAM (2)

SCADA REPLACEMENT

SUPPLY STATION 2 EXISTING CONTROL PANEL (REFERENCE)

REFERENCE SHEET NO.
SS2-P02

SHEET 128 of 366

FIELD

TELEMETRY PANEL

E0100
E0101
E0102
E0103
E0104
E0105
E0106
E0107
E0108
E0109
E0110
E0111
E0112
E0113
E0114
E0115
E0116
E0117
E0118
E0119
E0120
E0121
E0122

24VDC – CONT'D FROM DWG SS2–P02 (LINE P0219)

24P 24C

16 Pt. INPUT / 16 Pt. OUTPUT 24VDC MODULE 170 ADM 350 10

I/O MODULE 1

ROW 1 ROW 2 ROW 3

ABC–1/2A DFU4 24P4 → 18 L+

17 M–

ABC–4A DFU5 24P5 → 17 1L+ → 17 M–

ABC–4A DFU6 24P6 → 18 2L+ → 18 M–

CR–1 116 → 1 I:00016 POWER FAIL 120VAC

CR–2 115 → 2 I:00015 POWER FAIL 24VDC

UPS PANEL

UPS FAULT

UPS LO BATT

FU114 ABC–1/4 FU114 114 → 3 I:00014 UPS FAULT

113 → 4 I:00013 UPS LOW BATTERY

MCC – PUMP No.1
(SEE DWG SS2–E11)

HAND OFF AUTO

XOO

OOX

PUMP 1 RUNNING

ABC–1/4 FU111 112 → 5 I:00012 PUMP No.1 H–O–A IN HAND

111 → 6 I:00011 PUMP No.1 H–O–A IN AUTO

110 → 7 I:00010 PUMP No.1 RUNNING

ABC–1/4 FU109 (E) INTRUSION (EXISTING) 109 → 8 I:00009 INTRUSION

MCC – PUMP No.2
(SEE DWG SS2–E12)

HAND OFF AUTO

XOO

OOX PUMP 2 RUNNING

ABC–1/4 FU108 108 → 9 I:00008 PUMP No.2 H–O–A IN HAND

107 → 10 I:00007 PUMP No.2 H–O–A IN AUTO

ABC–1/4 FU107 106 → 11 I:00006 PUMP No.2 RUNNING

ABC–1/4 FU105 SMOKE DETECTOR (E) 105 → 12 I:00005 SMOKE ALARM

ABC–1/4 FU104 DRY WELL FLOOD SWITCH 104 → 13 I:00004 FLOOD SWITCH

ABC–1/4 FU103 PANIC ALARM (E) 103 → 14 I:00003 PANIC ALARM

ABC–1/4 FU102 650 ZONE FLOW TOTALIZER (FUTURE) 102 → 15 I:00002 650 ZONE FLOW TOTALIZER (FUTURE)

ABC–1/4 FU101 ROOM THERMOSTAT SWITCH 101 → 16 I:00001 FAN THERMOSTAT

24P 24C

NOTE: FIELD TERMINATIONS WILL BE ADDED ON AS–BUILT DRAWINGS.

EXISTING

Know what's below. Call 811 before you dig.

DATE	NO.	REVISION	BY
X/X/X	0	BID SET	

APPROVED BY:

Rob English, PE

DATE: 3/3/2026

Ben Mahony 2/26/2026 DESIGNED BY DATE

Ben Mahony 2/26/2026 DRAWN BY DATE

I-Wen Yang, PE 2/26/2026 REVIEWED BY DATE

CITY OF KIRKLAND WASHINGTON

CITY OF KIRKLAND
DEPARTMENT OF PUBLIC WORKS
123 FIFTH AVENUE KIRKLAND, WA 98033
(425) 587–3800 www.kirklandwa.gov

TELEMETRY PANEL - I/O MODULE 1 (INPUTS), CONTROL WIRING DIAGRAM
SCADA REPLACEMENT
SUPPLY STATION 2 EXISTING CONTROL PANEL (REFERENCE)

REFERENCE SHEET NO.
SS2-E01

SHEET 129 of 366

FIELD

TELEMETRY PANEL

545 ZONE HYDRAULIC CONTROL VALVE No.1

OPEN SV1-1

CLOSE SV1-2

PRV SV1-3

545 ZONE HYDRAULIC CONTROL VALVE No.2

OPEN SV2-1

CLOSE SV2-2

PRV SV2-3

PUMP No.1 CALL (SEE DWG SS2-E11)

PUMP No.2 CALL (SEE DWG SS2-E12)

VENTILATION FAN CALL (SEE DWG SS2-E10)

PUMP No.1 LOCKOUT (SEE DWG SS2-E11)

PUMP No.2 LOCKOUT (SEE DWG SS2-E12)

120VAC – CONT'D FROM DWG SS2-P02 (LINE P0220)

AC90 N1

24VDC – CONT'D FROM DWG SS2-P02 (LINE P0219)

24P 24C

16 Pt. INPUT / 16 Pt. OUTPUT 24VDC MODULE 170 ADM 350 10

I/O MODULE 1

	ROW 1	ROW 2	ROW 3	
CR03A / CR03B → CR-03	CR 3	016	1	0:00016	PUMP No.1 CALL
CR04A / CR04B → CR-04	CR 4	015	2	0:00015	PUMP No.2 CALL
EF-L1 / EF-L → CR-05	CR 5	014	3	0:00014	VENTILATION FAN CALL
CR06A → CR-06	CR 6	013	4	0:00013	545 ZONE HYDRAULIC CONTROL VALVE No.1 SOLENOID OPEN CALL
CR07A → CR-07	CR 7	012	5	0:00012	545 ZONE HYDRAULIC CONTROL VALVE No.1 SOLENOID CLOSE CALL
CR08A → CR-08	CR 8	011	6	0:00011	545 ZONE HYDRAULIC CONTROL VALVE No.1 SOLENOID PRESSURE REDUCING CALL
CR09B → CR-09	CR 9	010	7	0:00010	545 ZONE HYDRAULIC CONTROL VALVE No.2 SOLENOID OPEN CALL
CR10B → CR-10	CR 10	009	8	0:00009	545 ZONE HYDRAULIC CONTROL VALVE No.2 SOLENOID CLOSE CALL
CR11B → CR-11	CR 11	008	9	0:00008	545 ZONE HYDRAULIC CONTROL VALVE No.2 SOLENOID PRESSURE REDUCING CALL
N1	CR 12	007	10	0:00007	PUMP No.1 LOCKOUT
CR12A / CR12B → CR-12	CR 13	006	11	0:00006	PUMP No.2 LOCKOUT
CR13A / CR13B → CR-13	CR 14	005	12	0:00005	SPARE
CR14A / CR14B → CR-14	CR 15	004	13	0:00004	SPARE
CR15A / CR15B → CR-15	CR 16	003	14	0:00003	SPARE
CR16A / CR16B → CR-16	CR 17	002	15	0:00002	SPARE
CR17A / CR17B → CR-17	CR 18	001	16	0:00001	SPARE
CR18A / CR18B → CR-18					

NOTE: FIELD TERMINATIONS WILL BE ADDED ON AS-BUILT DRAWINGS.

EXISTING

Know what's below. Call 811 before you dig.

DATE	NO.	REVISION	BY
X/X/X	0	BID SET	

APPROVED BY:

Rob English, PE

DATE: 3/3/2026

Ben Mahony 2/26/2026 DESIGNED BY DATE

Ben Mahony 2/26/2026 DRAWN BY DATE

I-Wen Yang, PE 2/26/2026 REVIEWED BY DATE

CITY OF KIRKLAND

DEPARTMENT OF PUBLIC WORKS
123 FIFTH AVENUE KIRKLAND, WA 98033
(425) 587-3800 www.kirklandwa.gov

TELEMETRY PANEL - I/O MODULE 1 (OUTPUTS), CONTROL WIRING DIAGRAM

SCADA REPLACEMENT

SUPPLY STATION 2 EXISTING CONTROL PANEL (REFERENCE)

REFERENCE SHEET NO. SS2-EO1A

SHEET 130 of 366

PUMP CONTROL PANEL

E0300
E0301
E0302
E0303
E0304
E0305
E0306
E0307
E0308
E0309
E0310
E0311
E0312
E0313
E0314
E0315
E0316
E0317
E0318
E0319
E0320
E0321
E0322

TELEMETRY PANEL

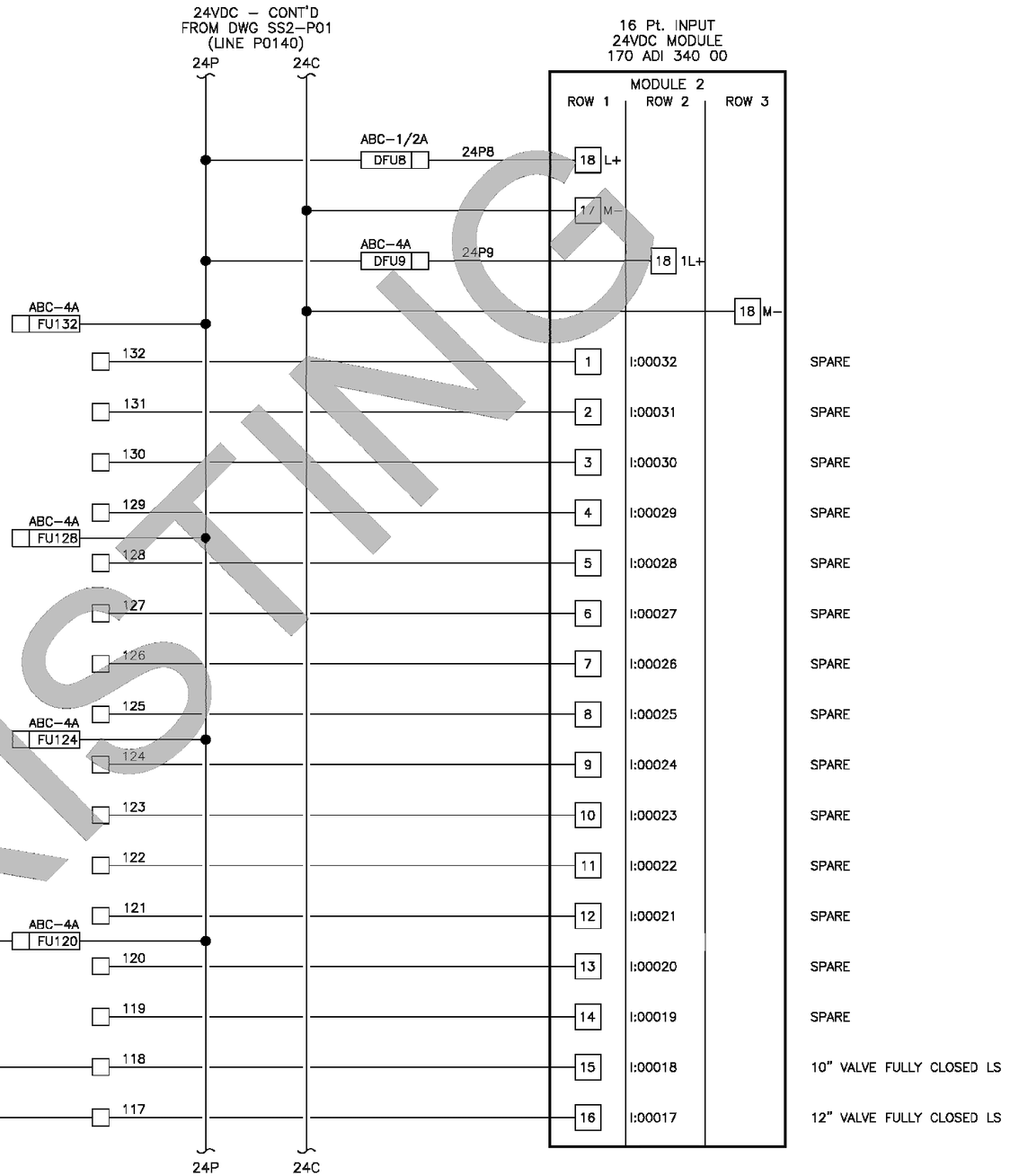

EXISTING

Know what's below. Call 811 before you dig.

DATE	NO.	REVISION	BY
X/X/X	0	BID SET	

APPROVED BY:

Rob English, PE

DATE: 3/3/2026

Ben Mahony (DESIGNED BY)	2/26/2026 (DATE)
Ben Mahony (DRAWN BY)	2/26/2026 (DATE)
I-Wen Yang, PE (REVIEWED BY)	2/26/2026 (DATE)

CITY OF KIRKLAND
WASHINGTON

CITY OF KIRKLAND
DEPARTMENT OF PUBLIC WORKS
123 FIFTH AVENUE KIRKLAND, WA 98033
(425) 587–3800 www.kirklandwa.gov

TELEMETRY PANEL - I/O MODULE 2 (INPUTS), CONTROL WIRING DIAGRAM

SCADA REPLACEMENT

SUPPLY STATION 2 EXISTING CONTROL PANEL (REFERENCE)

REFERENCE SHEET NO.
SS2-EO2

SHEET 131 of 366

PUMP CONTROL PANEL

TELEMETRY PANEL

E0400
E0401
E0402
E0403
E0404
E0405
E0406
E0407
E0408
E0409
E0410
E0411
E0412
E0413
E0414
E0415
E0416
E0417
E0418
E0419
E0420
E0421
E0422

SEATTLE PRESSURE TRANSMITTER (EXISTING) (0–400 PSI)

545 ZONE PRESSURE TRANSMITTER (EXISTING) (0–100 PSI)

24VDC – CONT'D FROM DWG SS2–P01 (LINE P0140)

24P

24C

ABC–1/2A DFU10

8 Pt. ANALOG INPUT MODULE BASE 170 AAI 030 00

MODULE 3

ROW 3 ROW 2

18 L+

17 M–

ABC–1/4 FU301

301+

301–

24C

SHLD

4–20 mA

2 InI1

1 Agnd1

2 InI1

1 InU1

IN 1 300001

ABC–1/4 FU302

302+

302–

24C

SHLD

4–20 mA

4 InI2

3 Agnd2

4 InI2

3 InU2

IN 2 300002

ABC–1/4 FU303

303+

303–

24C

SHLD

4–20 mA

6 InI3

5 Agnd3

6 InI3

5 InU3

IN 3 300003

ABC–1/4 FU304

304+

304–

24C

SHLD

4–20 mA

8 InI4

7 Agnd4

8 InI4

7 InU4

IN 4 300004

CONT'D TO DWG SS2–E03A

24P

24C

NOTE: FIELD TERMINATIONS WILL BE ADDED ON AS–BUILT DRAWINGS.

EXISTING

Know what's below. Call 811 before you dig.

DATE	NO.	REVISION	BY
X/X/X	0	BID SET	

APPROVED BY:

Rob English, PE

DATE: 3/3/2026

Ben Mahony DESIGNED BY	2/26/2026 DATE
Ben Mahony DRAWN BY	2/26/2026 DATE
I-Wen Yang, PE REVIEWED BY	2/26/2026 DATE

CITY OF KIRKLAND WASHINGTON

CITY OF KIRKLAND

DEPARTMENT OF PUBLIC WORKS

123 FIFTH AVENUE KIRKLAND, WA 98033

(425) 587–3800 www.kirklandwa.gov

TELEMETRY PANEL - I/O MODULE 3 ANALOG - CONTROL WIRING DIAGRAM (1)

SCADA REPLACEMENT

SUPPLY STATION 2 EXISTING CONTROL PANEL (REFERENCE)

REFERENCE SHEET NO. SS1-E03

SHEET 132 of 366

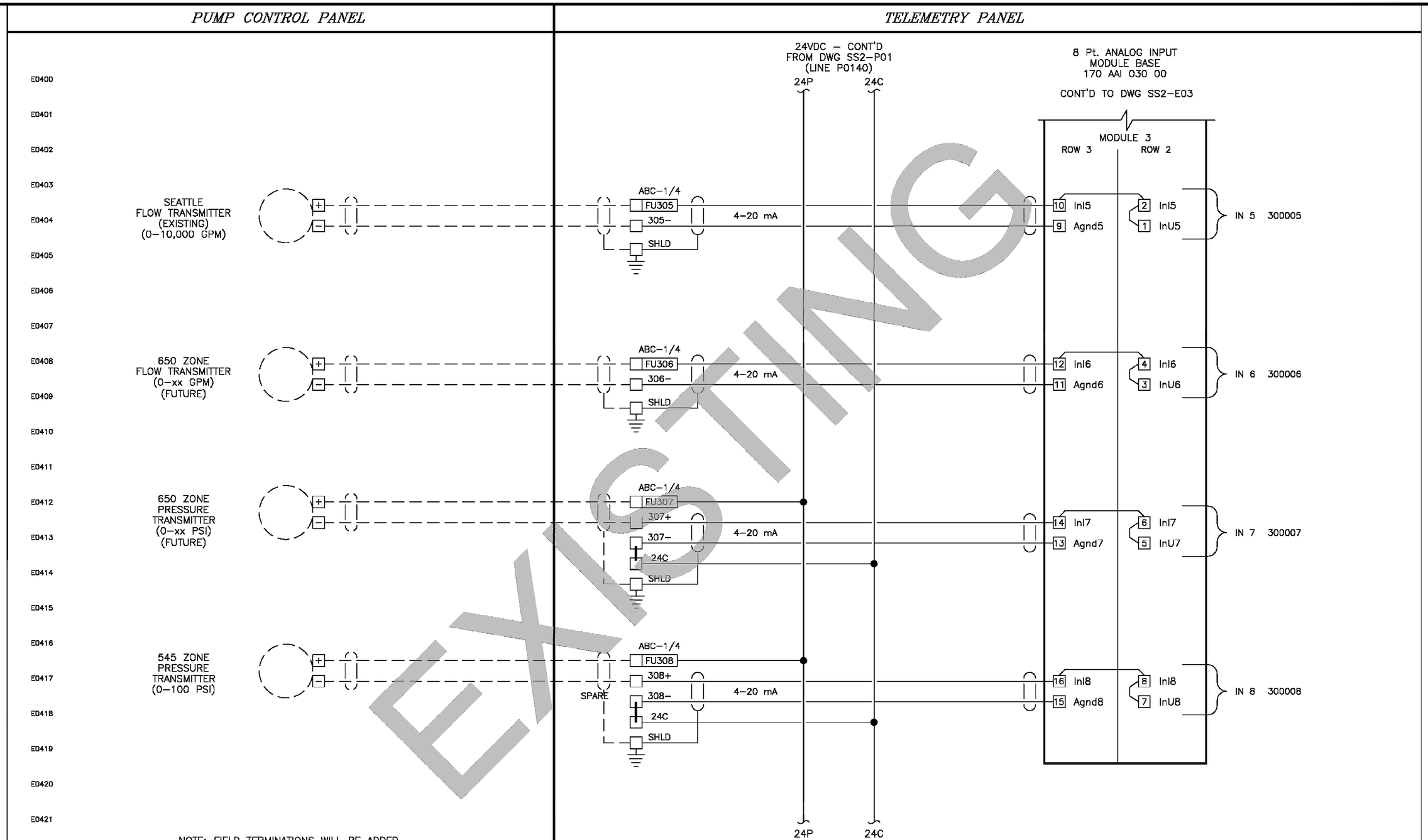

NOTE: FIELD TERMINATIONS WILL BE ADDED ON AS–BUILT DRAWINGS.

DATE	NO.	REVISION	BY
X/X/X	0	BID SET	

APPROVED BY:

Rob English, PE

DATE: 3/3/2026

Ben Mahony (DESIGNED BY)	2/26/2026 (DATE)
Ben Mahony (DRAWN BY)	2/26/2026 (DATE)
I-Wen Yang, PE (REVIEWED BY)	2/26/2026 (DATE)

CITY OF KIRKLAND

DEPARTMENT OF PUBLIC WORKS
123 FIFTH AVENUE KIRKLAND, WA 98033
(425) 587–3800 www.kirklandwa.gov

TELEMETRY PANEL - I/O MODULE 3 ANALOG - CONTROL WIRING DIAGRAM (2)

SCADA REPLACEMENT

SUPPLY STATION 2 EXISTING CONTROL PANEL (REFERENCE)

REFERENCE SHEET NO. SS1-EO3A

SHEET 133 of 366

LIGHTING PANEL 'L'	TELEMETRY PANEL	FIELD

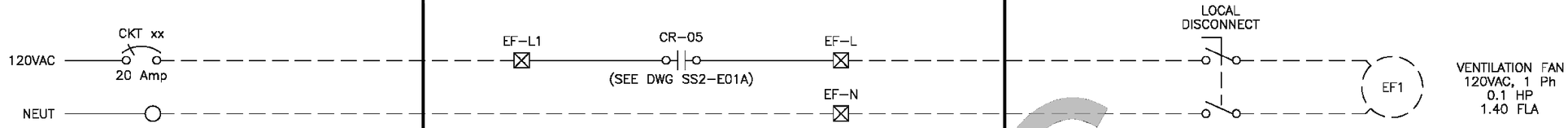

EXISTING

NOTE: FIELD TERMINATIONS WILL BE ADDED ON AS-BUILT DRAWINGS.

Know what's below. Call 811 before you dig.

DATE	NO.	REVISION	BY
X/X/X	0	BID SET	

APPROVED BY:

Rob English, PE

DATE: 3/3/2026

Ben Mahony 2/26/2026
DESIGNED BY DATE

Ben Mahony 2/26/2026
DRAWN BY DATE

I-Wen Yang, PE 2/26/2026
REVIEWED BY DATE

CITY OF KIRKLAND WASHINGTON

CITY OF KIRKLAND
DEPARTMENT OF PUBLIC WORKS
123 FIFTH AVENUE KIRKLAND, WA 98033
(425) 587-3800 www.kirklandwa.gov

VENTILATION FAN, CONTROL WIRING DIAGRAM

SCADA REPLACEMENT

SUPPLY STATION 2 EXISTING CONTROL PANEL (REFERENCE)

REFERENCE SHEET NO.
SS1-E10

MCC SECTION – 1 (EXISTING)

TELEMETRY PANEL

CIRCUIT BREAKER

480VAC

CPT

120VAC WIRING

X1

120VAC

X2

OFF

HAND

AUTO

X00

00X

O/L

M1

CR–12

PUMP LOCKOUT CONT'D TO DWG SS2–E01A

CR–03

PUMP CALL CONT'D TO DWG SS2–E01A

IN HAND

IN AUTO

+24VDC

RUNNING

PLC INPUTS CONT'D TO DWG SS2–E01

24VDC WIRING

M1

M

PUMP 1

NOTE: TERMINAL NUMBERS TO RTU WILL BE ADDED ON AS–BUILT DRAWINGS

EXISTING

Know what's below. Call 811 before you dig.

DATE	NO.	REVISION	BY
X/X/X	0	BID SET	

APPROVED BY:

Rob English, PE

DATE: 3/3/2026

Ben Mahony	DESIGNED BY	2/26/2026 DATE
Ben Mahony	DRAWN BY	2/26/2026 DATE
I-Wen Yang, PE	REVIEWED BY	2/26/2026 DATE

CITY OF KIRKLAND

DEPARTMENT OF PUBLIC WORKS
123 FIFTH AVENUE KIRKLAND, WA 98033
(425) 587–3800 www.kirklandwa.gov

MCC - PUMP NO. 1, CONTROL WIRING DIAGRAM

SCADA REPLACEMENT

SUPPLY STATION 2 EXISTING CONTROL PANEL (REFERENCE)

REFERENCE SHEET NO. SS1-E11

SHEET 135 of 366

MCC SECTION – 2 (EXISTING)

TELEMETRY PANEL

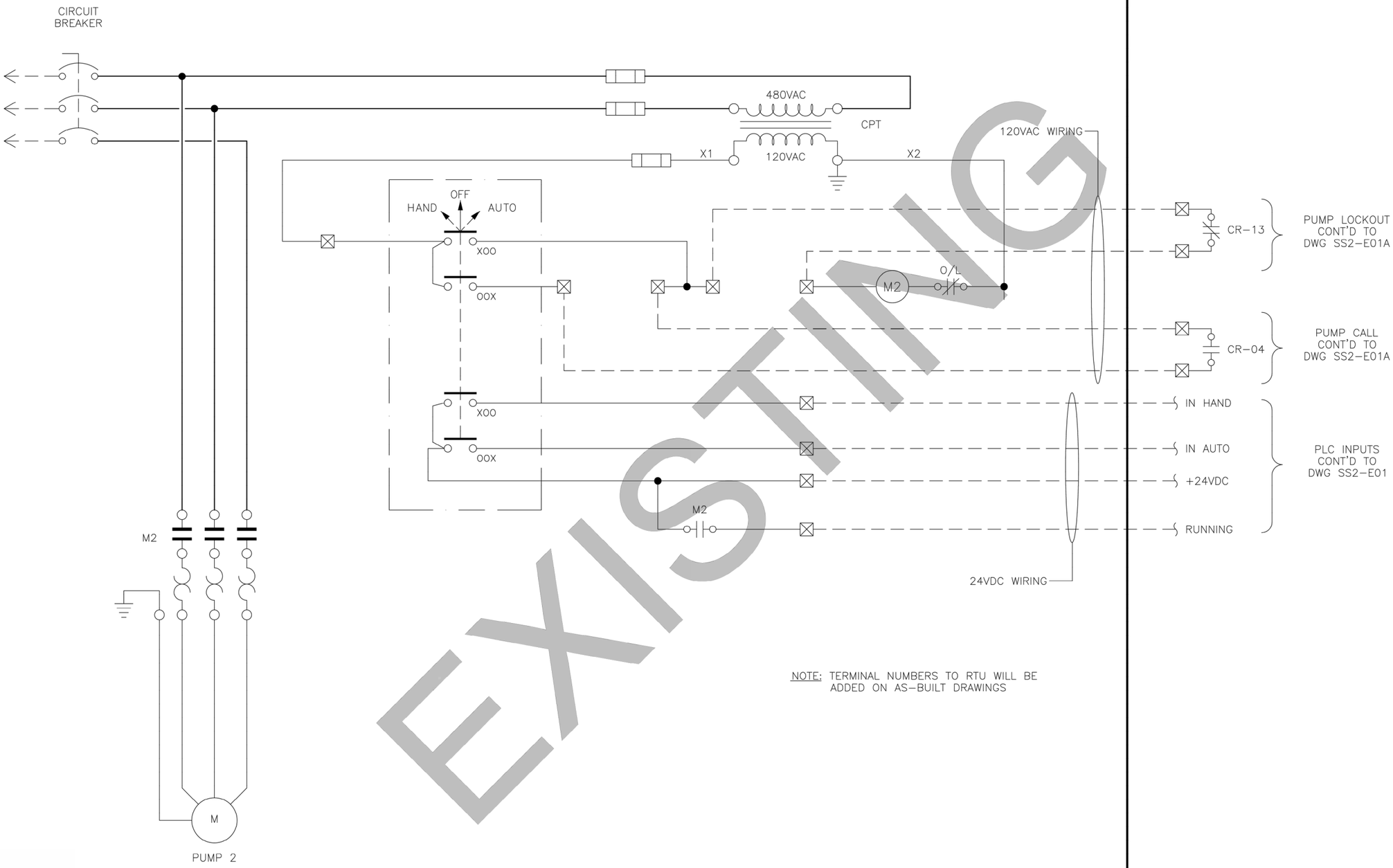

NOTE: TERMINAL NUMBERS TO RTU WILL BE ADDED ON AS-BUILT DRAWINGS

EXISTING

Know what's below. Call 811 before you dig.

DATE	NO.	REVISION	BY
X/X/X	0	BID SET	

APPROVED BY:

Rob English, PE

DATE: 3/3/2026

Ben Mahony (DESIGNED BY)	2/26/2026 (DATE)
Ben Mahony (DRAWN BY)	2/26/2026 (DATE)
I-Wen Yang, PE (REVIEWED BY)	2/26/2026 (DATE)

CITY OF KIRKLAND

DEPARTMENT OF PUBLIC WORKS
123 FIFTH AVENUE KIRKLAND, WA 98033
(425) 587-3800 www.kirklandwa.gov

MCC - PUMP NO. 2, CONTROL WIRING DIAGRAM

SCADA REPLACEMENT

SUPPLY STATION 2 EXISTING CONTROL PANEL (REFERENCE)

REFERENCE SHEET NO.
SS1-E12

SHEET 136 of 366

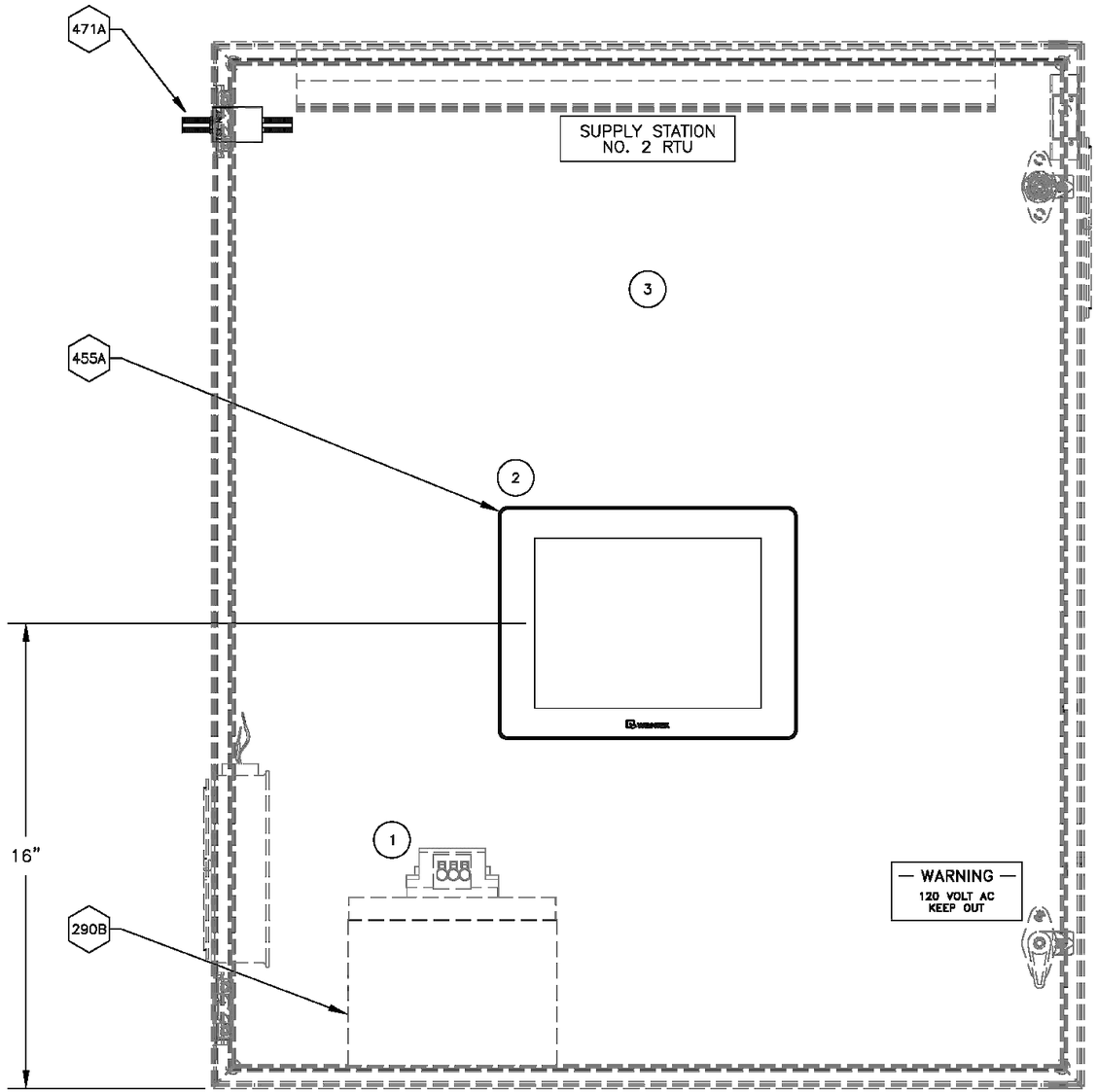

EXISTING ENCLOSURE

NOTES:
1. INSTALL NEW MAPLE SYSTEMS OIT
2. REMOVE EXISTING BATTERY AND REPLACE WITH NEW
3. REMOVE EXISTING ROUTER FROM INSIDE OF DOOR

CONDUIT ENTRY
BOTTOM

NEMA RATING
12

MATERIAL
PAINTED CARBON STEEL

BUILD TYPE (FOR INTERNAL USE)
STANDARD

PANEL POWER SOURCE

PANEL xx CIRCUIT xx
120 VOLTS 1PH 60Hz

PANEL RATING

FULL LOAD AMPS 10A
SHORT CIRCUIT 10KAIC
LARGEST MOTOR FLA N/A

XXX BOM ITEM NUMBER

Know what's below. Call 811 before you dig.

DATE	NO.	REVISION	BY
X/X/X	0	BID SET	

APPROVED BY:

Rob English, PE

DATE: 3/3/2026

Ben Mahony (DESIGNED BY)	2/26/2026 (DATE)
Ben Mahony (DRAWN BY)	2/26/2026 (DATE)
I-Wen Yang, PE (REVIEWED BY)	2/26/2026 (DATE)

CITY OF KIRKLAND
DEPARTMENT OF PUBLIC WORKS
123 FIFTH AVENUE KIRKLAND, WA 98033
(425) 587-3800 www.kirklandwa.gov

LAYOUT - PANEL - FRONT ELEVATION

SCADA REPLACEMENT

SUPPLY STATION 2 CONTROL PANEL (S2)

REFERENCE SHEET NO.
S2-10.00

SHEET 137 of 366

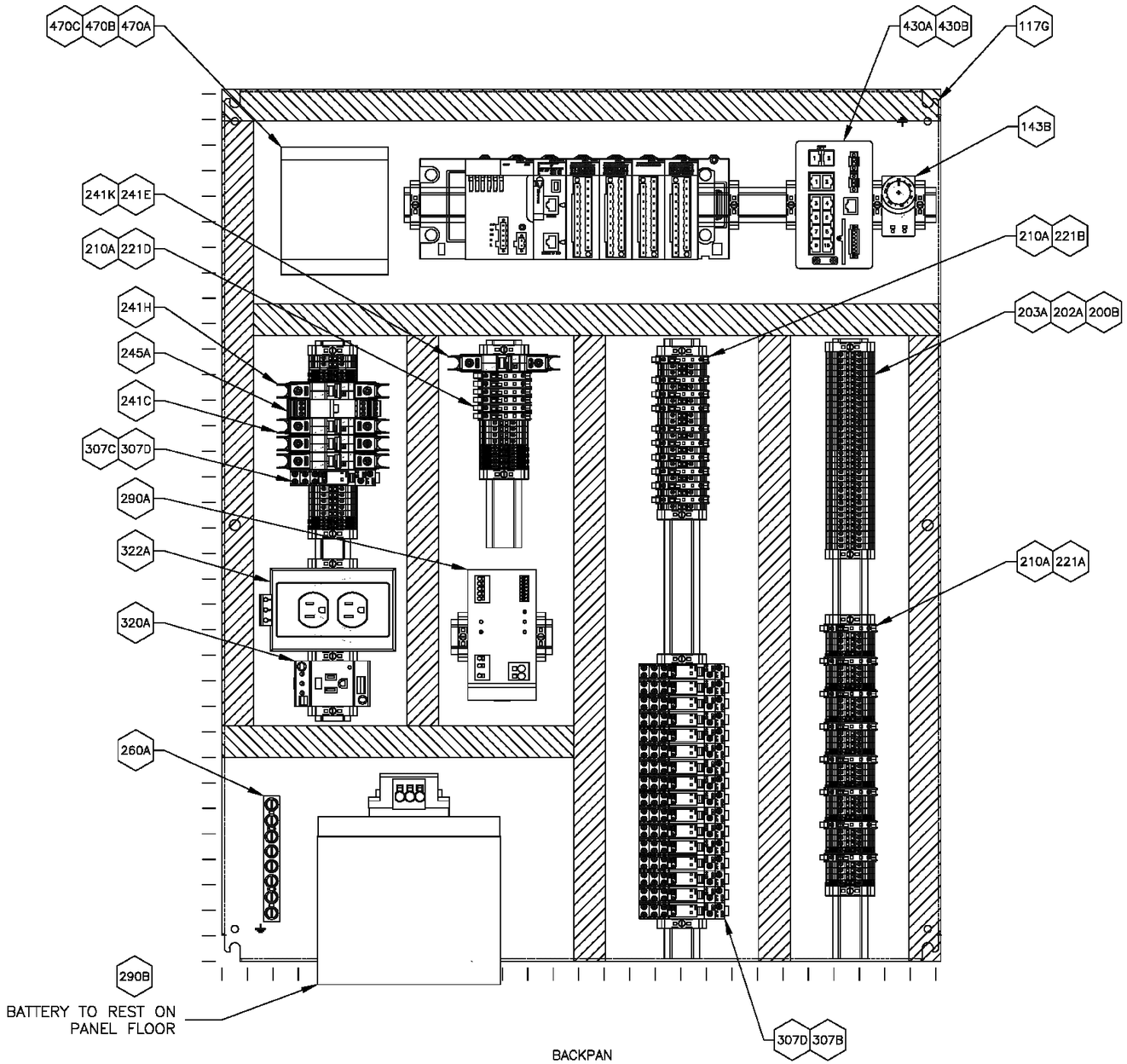

NOTES:
1. BACKPANEL ASSEMBLY TO BE INSTALLED IN EXISTING ENCLOSURE

XXX BOM ITEM NUMBER

Know what's below. Call 811 before you dig.

DATE	NO.	REVISION	BY
X/X/X	0	BID SET	

APPROVED BY:

Rob English, PE

DATE: 3/3/2026

Ben Mahony	DESIGNED BY	2/26/2026 DATE
Ben Mahony	DRAWN BY	2/26/2026 DATE
I-Wen Yang, PE	REVIEWED BY	2/26/2026 DATE

CITY OF KIRKLAND

DEPARTMENT OF PUBLIC WORKS
123 FIFTH AVENUE KIRKLAND, WA 98033
(425) 587-3800 www.kirklandwa.gov

LAYOUT - PANEL - BACKPAN ELEVATION

SCADA REPLACEMENT

SUPPLY STATION 2 CONTROL PANEL (S2)

REFERENCE SHEET NO.
S2-10.05

SHEET 138 of 366

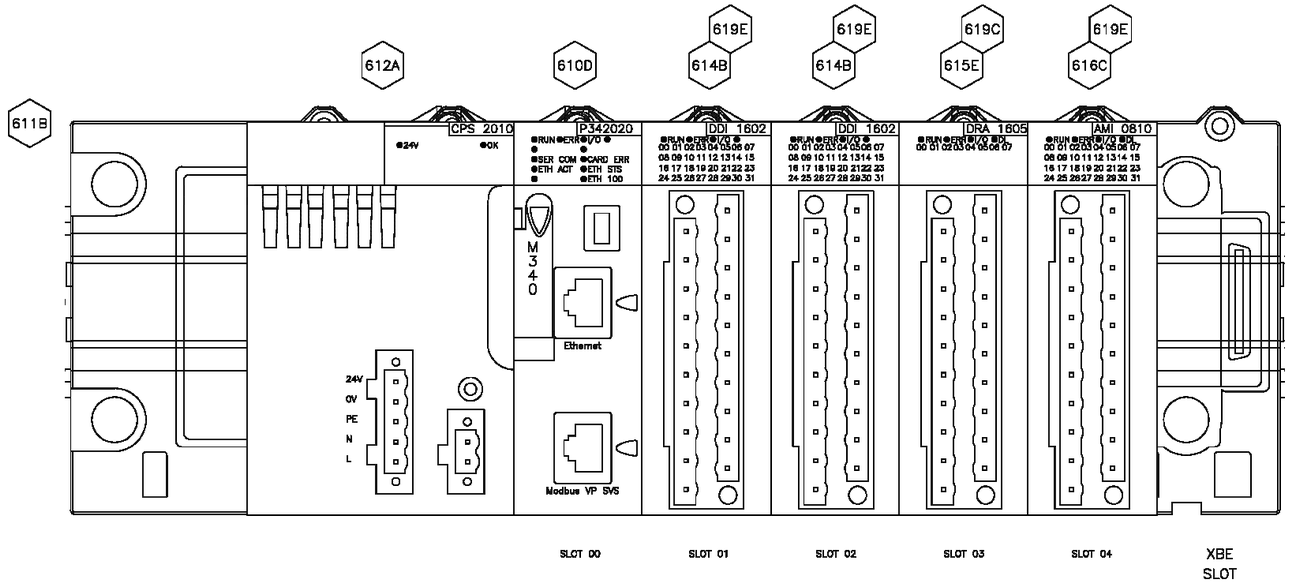

RACK 1

XXX BOM ITEM NUMBER

811 Know what's below. Call 811 before you dig.

DATE	NO.	REVISION	BY
X/X/X	0	BID SET	

APPROVED BY:

Rob English, PE

DATE: 3/3/2026

Ben Mahony 2/26/2026
DESIGNED BY DATE

Ben Mahony 2/26/2026
DRAWN BY DATE

I-Wen Yang, PE 2/26/2026
REVIEWED BY DATE

CITY OF KIRKLAND WASHINGTON

CITY OF KIRKLAND
DEPARTMENT OF PUBLIC WORKS
123 FIFTH AVENUE KIRKLAND, WA 98033
(425) 587-3800 www.kirklandwa.gov

LAYOUT - PANEL - PLC RACK 1

SCADA REPLACEMENT

SUPPLY STATION 2 CONTROL PANEL (S2)

REFERENCE SHEET NO.
S2-10.07

SHEET 139 of 366

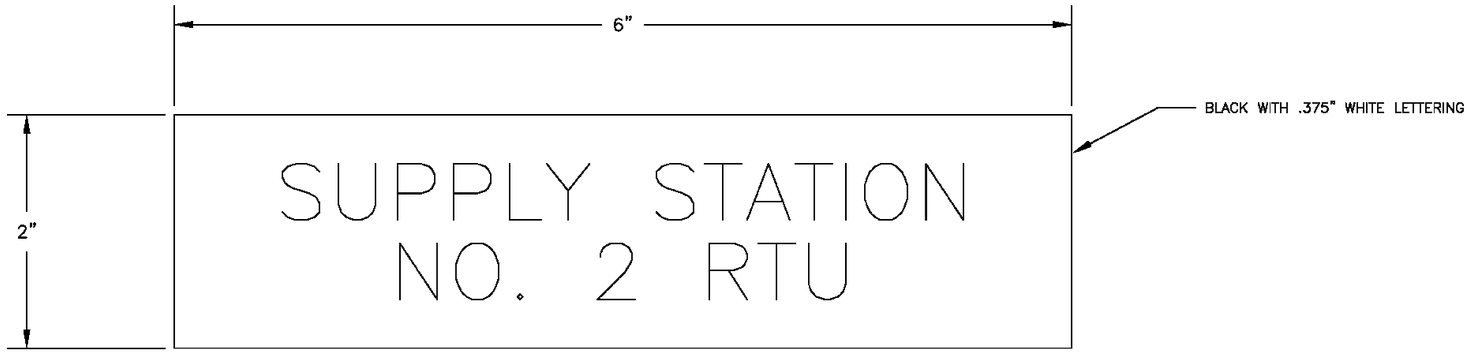

XXX BOM ITEM NUMBER

Know what's below. Call 811 before you dig.

DATE	NO.	REVISION	BY
X/X/X	0	BID SET	

APPROVED BY:

Rob English, PE

DATE: 3/3/2026

Ben Mahony 2/26/2026
DESIGNED BY DATE

Ben Mahony 2/26/2026
DRAWN BY DATE

I-Wen Yang, PE 2/26/2026
REVIEWED BY DATE

CITY OF KIRKLAND WASHINGTON

CITY OF KIRKLAND
DEPARTMENT OF PUBLIC WORKS
123 FIFTH AVENUE KIRKLAND, WA 98033
(425) 587-3800 www.kirklandwa.gov

LAYOUT - PANEL - NAMEPLATE DETAIL

SCADA REPLACEMENT

SUPPLY STATION 2 CONTROL PANEL (S2)

REFERENCE SHEET NO.
S2-10.20

SHEET 140 of 366

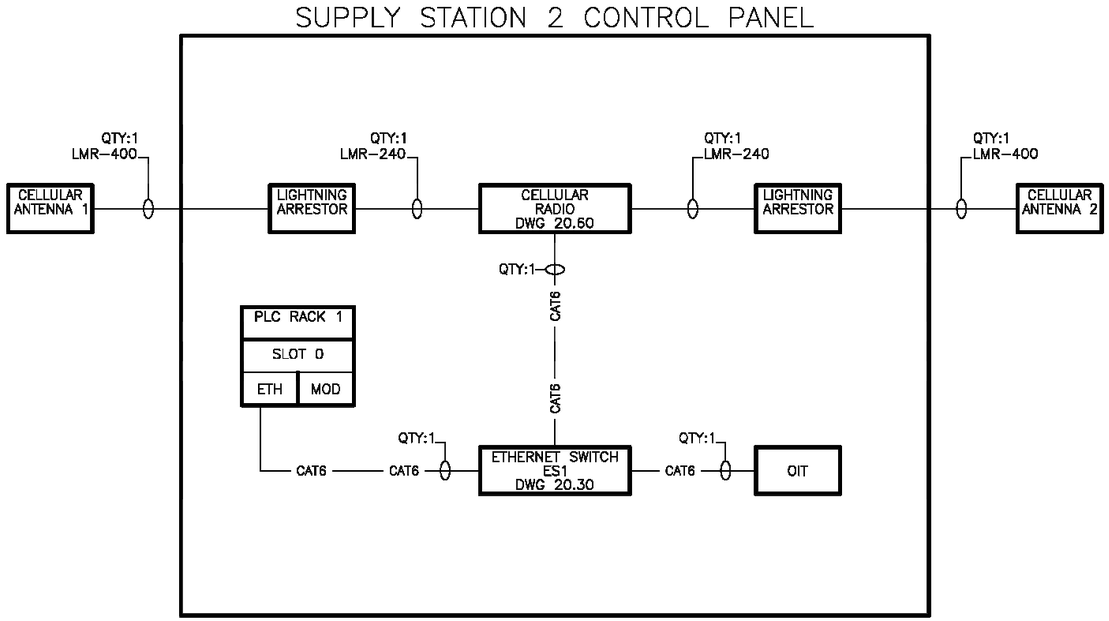

DATE	NO.	REVISION	BY
X/X/X	0	BID SET	

Know what's below. Call 811 before you dig.

APPROVED BY:

Rob English, PE

DATE: 3/3/2026

Ben Mahony 2/26/2026
DESIGNED BY DATE

Ben Mahony 2/26/2026
DRAWN BY DATE

I-Wen Yang, PE 2/26/2026
REVIEWED BY DATE

CITY OF KIRKLAND WASHINGTON

CITY OF KIRKLAND
DEPARTMENT OF PUBLIC WORKS
123 FIFTH AVENUE KIRKLAND, WA 98033
(425) 587-3800 www.kirklandwa.gov

NETWORK OVERVIEW DIAGRAM

SCADA REPLACEMENT

SUPPLY STATION 2 CONTROL PANEL (S2)

REFERENCE SHEET NO.
S2-20.00

SHEET 141 of 366

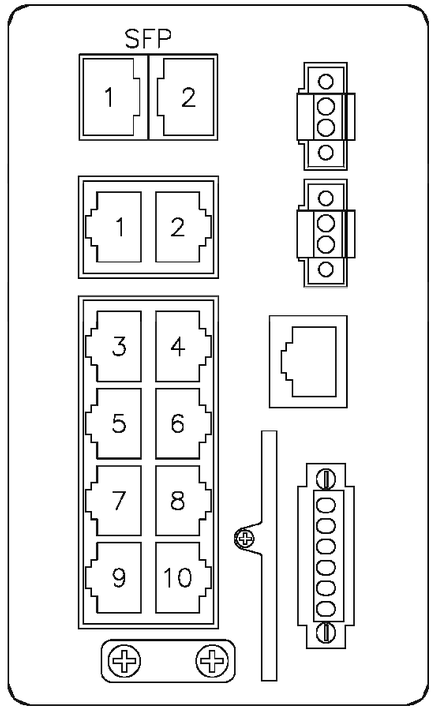

NETWORK SWITCH NS-1					
				DESTINATION DEVICE	
PORT#	CABLE TYPE	NETWORK DESCRIPTION	CABLE LABEL	DESCRIPTION	PORT #
1	CAT6	PROGRAMMABLE LOGIC CONTROLLER	PLC	PROGRAMMABLE LOGIC CONTROLLER	1
2	CAT6	OPERATIONAL INTERFACE TERMINAL	OIT	OPERATIONAL INTERFACE TERMINAL	1
3	CAT6	CELLULAR RADIO	RADIO	CELLULAR RADIO	ETHERNET
4					
5					
6					
7					
8					
COMBO 1					
COMBO 2					

Know what's below. Call 811 before you dig.

DATE	NO.	REVISION	BY
X/X/X	0	BID SET	

APPROVED BY:

Rob English, PE

DATE: 3/3/2026

Ben Mahony 2/26/2026
DESIGNED BY DATE

Ben Mahony 2/26/2026
DRAWN BY DATE

I-Wen Yang, PE 2/26/2026
REVIEWED BY DATE

CITY OF KIRKLAND WASHINGTON

CITY OF KIRKLAND
DEPARTMENT OF PUBLIC WORKS
123 FIFTH AVENUE KIRKLAND, WA 98033
(425) 587-3800 www.kirklandwa.gov

NETWORK SWITCH (NS-1), PORT SCHEDULE

SCADA REPLACEMENT

SUPPLY STATION 2 CONTROL PANEL (S2)

REFERENCE SHEET NO.
S2-23.00

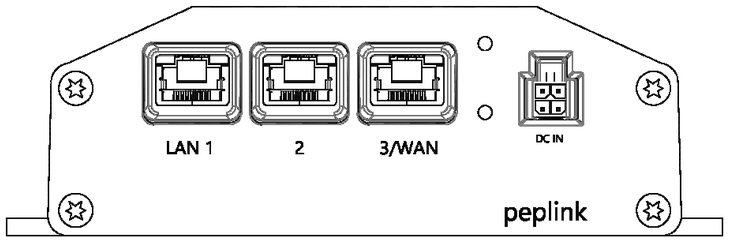

CELLULAR MODEM
CM1

				DESTINATION DEVICE	
PORT#	CABLE TYPE	NETWORK DESCRIPTION	CABLE LABEL	DESCRIPTION	PORT #
LAN 1	CAT6	CELLULAR RADIO	RADIO	ETHERNET SWITCH	3
LAN 2					
LAN 3/ WAN					
MAIN	LMR-240	CELLULAR ANTENNA 1	CELL-1	LIGHTNING ARRESTOR 1	N/A
AUX	LMR-240	CELLULAR ANTENNA 1	CELL-2	LIGHTNING ARRESTOR 2	N/A

Know what's below. Call 811 before you dig.

DATE	NO.	REVISION	BY
X/X/X	0	BID SET	

APPROVED BY:

Rob English, PE

DATE: 3/3/2026

Ben Mahony 2/26/2026
DESIGNED BY DATE

Ben Mahony 2/26/2026
DRAWN BY DATE

I-Wen Yang, PE 2/26/2026
REVIEWED BY DATE

CITY OF KIRKLAND
WASHINGTON

CITY OF KIRKLAND
DEPARTMENT OF PUBLIC WORKS
123 FIFTH AVENUE KIRKLAND, WA 98033
(425) 587-3800 www.kirklandwa.gov

COMM - CELLULAR MODEM (CM1), PORT SCHEDULE

SCADA REPLACEMENT

SUPPLY STATION 2 CONTROL PANEL (S2)

REFERENCE SHEET NO.
S2-26.00

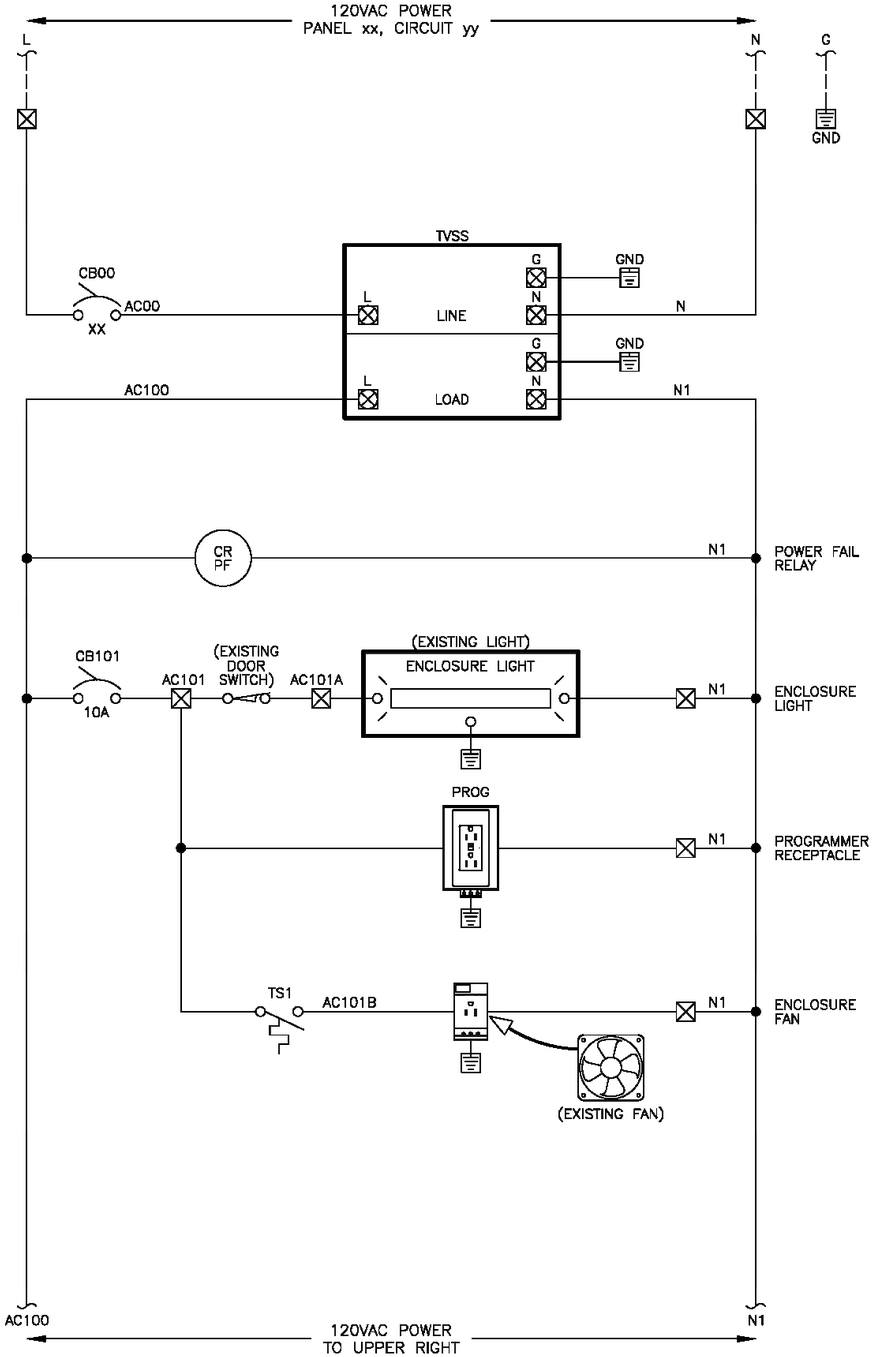

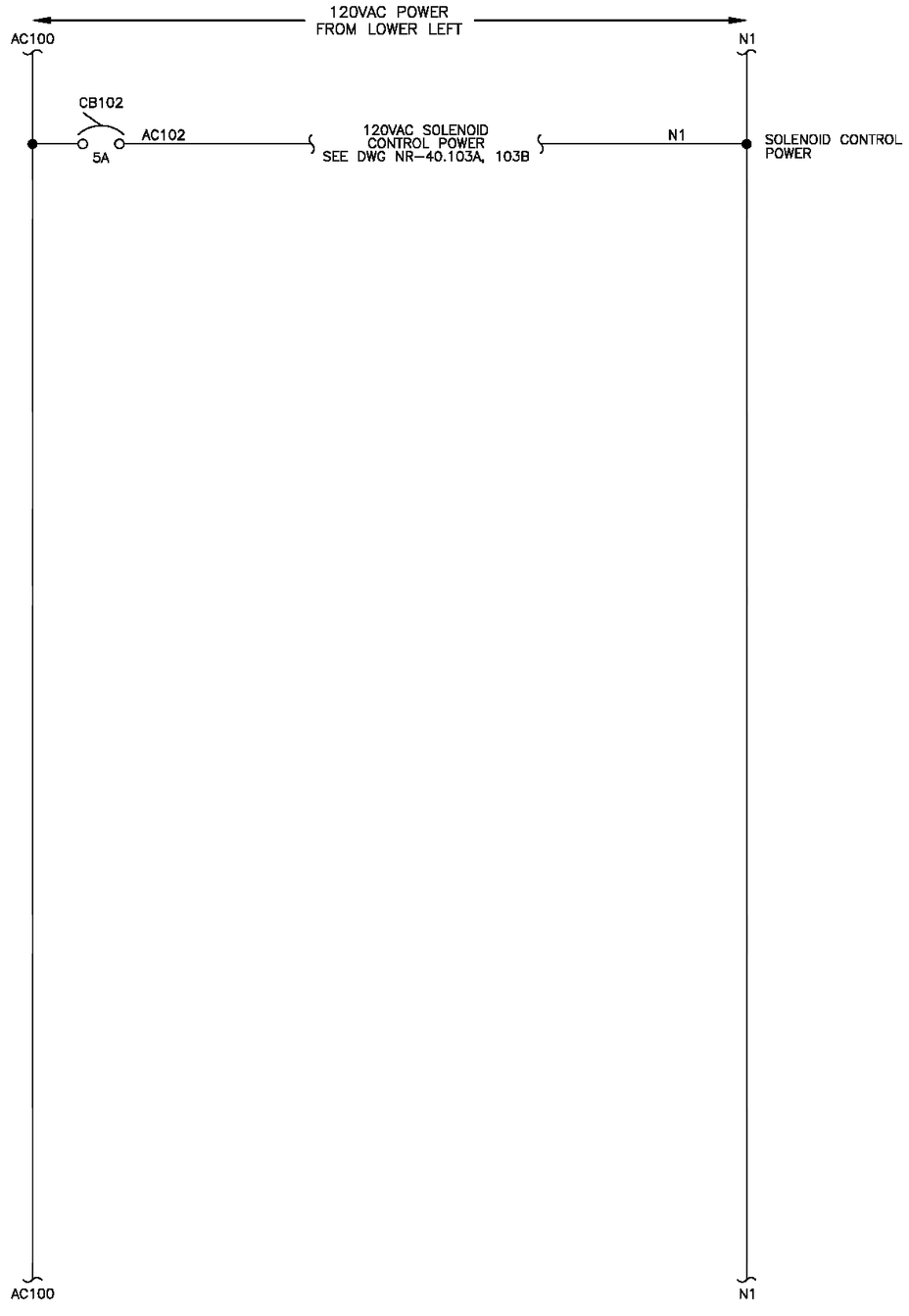

Know what's below. Call 811 before you dig.

DATE	NO.	REVISION	BY
X/X/X	0	BID SET	

APPROVED BY:

Rob English, PE

DATE: 3/3/2026

Ben Mahony	DESIGNED BY	2/26/2026 DATE
Ben Mahony	DRAWN BY	2/26/2026 DATE
I-Wen Yang, PE	REVIEWED BY	2/26/2026 DATE

CITY OF KIRKLAND

DEPARTMENT OF PUBLIC WORKS
123 FIFTH AVENUE KIRKLAND, WA 98033
(425) 587-3800 www.kirklandwa.gov

120VAC POWER DISTRIBTUTION DIAGRAM

SCADA REPLACEMENT

SUPPLY STATION 2 CONTROL PANEL (S2)

REFERENCE SHEET NO. S2-31.00

SHEET 144 of 366

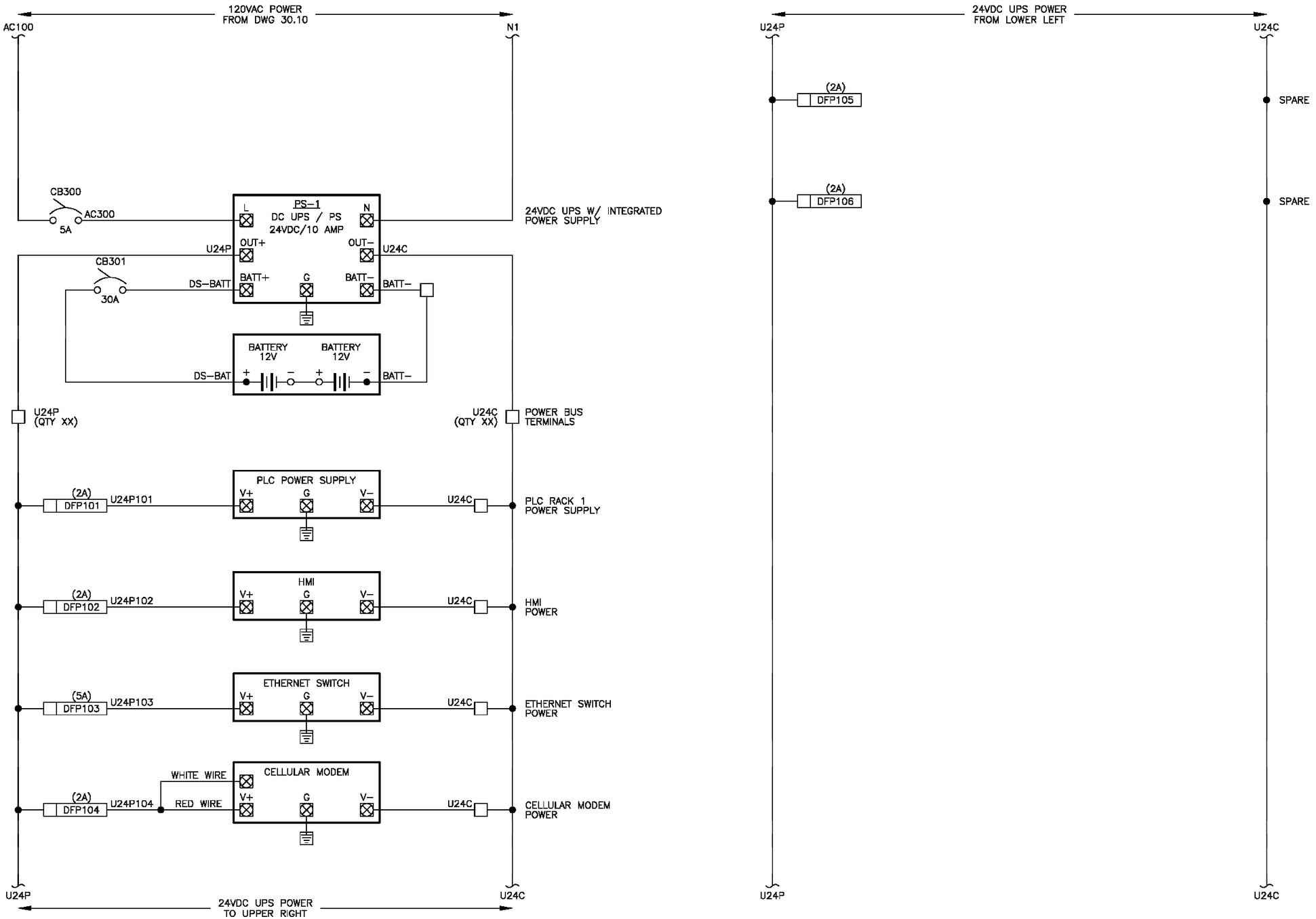

Know what's below. Call 811 before you dig.

DATE	NO.	REVISION	BY
X/X/X	0	BID SET	

APPROVED BY:

Rob English, PE

DATE: 3/3/2026

Ben Mahony (DESIGNED BY)	2/26/2026 (DATE)
Ben Mahony (DRAWN BY)	2/26/2026 (DATE)
I-Wen Yang, PE (REVIEWED BY)	2/26/2026 (DATE)

CITY OF KIRKLAND

DEPARTMENT OF PUBLIC WORKS
123 FIFTH AVENUE KIRKLAND, WA 98033
(425) 587-3800 www.kirklandwa.gov

24VDC POWER DISTRIBTUTION DIAGRAM

SCADA REPLACEMENT

SUPPLY STATION 2 CONTROL PANEL (S2)

REFERENCE SHEET NO.
S2-32.00

SHEET
145
of
366

FIELD

S2

MCC – PUMP NO. 1

XX
XX
XX
XX

24VDC POWER FROM DWG 32.00

24P

24C

16 PT. 24VDC DISCRETE INPUT MODULE RACK 1, SLOT 01

BMXDDI1602

(0.5A) DF.101.00 24P

DI.101.00 — DI.101.00 1 I0 — PUMP NO. 1 IN HAND

DI.101.01 — DI.101.01 2 I1 — PUMP NO. 1 IN AUTO

DI.101.02 — DI.101.02 3 I2 — PUMP NO. 1 RUNNING

(0.5A) DF.101.03 24P

DI.101.03 — DI.101.03 4 I3 — SPARE

DI.101.04 — DI.101.04 5 I4 — SPARE

DI.101.05 — DI.101.05 6 I5 — SPARE

DI.101.06 — DI.101.06 7 I6 — SPARE

INTRUSION SWITCH

(0.5A) DF.101.07 24P

DI.101.07 — DI.101.07 8 I7 — INTRUSION ALARM

24P

24C

(CONTINUED TO DWG 40.101B)

Know what's below. Call 811 before you dig.

DATE	NO.	REVISION	BY
X/X/X	0	BID SET	

APPROVED BY:

Rob English, PE

DATE: 3/3/2026

Ben Mahony (DESIGNED BY)	2/26/2026 (DATE)
Ben Mahony (DRAWN BY)	2/26/2026 (DATE)
I-Wen Yang, PE (REVIEWED BY)	2/26/2026 (DATE)

CITY OF KIRKLAND WASHINGTON

CITY OF KIRKLAND
DEPARTMENT OF PUBLIC WORKS
123 FIFTH AVENUE KIRKLAND, WA 98033
(425) 587–3800 www.kirklandwa.gov

DISCRETE INPUT MODULE RACK 1, SLOT 01 - WIRING DIAGRAM (1)

SCADA REPLACEMENT

SUPPLY STATION 2 CONTROL PANEL (S2)

REFERENCE SHEET NO. S2-40. 101A

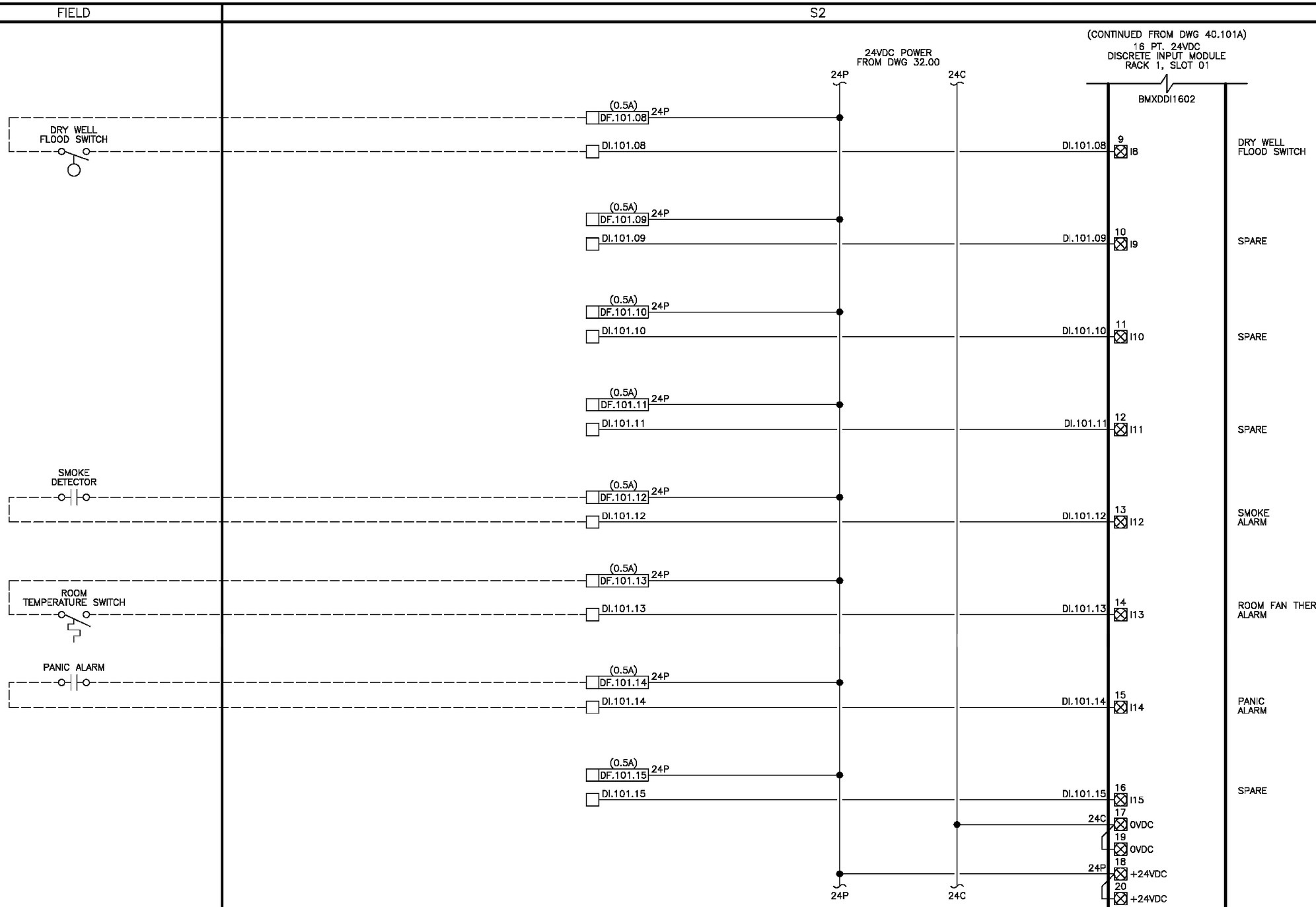

Know what's below. Call 811 before you dig.

DATE	NO.	REVISION	BY
X/X/X	0	BID SET	

APPROVED BY:

Rob English, PE

DATE: 3/3/2026

Ben Mahony	DESIGNED BY	2/26/2026 DATE
Ben Mahony	DRAWN BY	2/26/2026 DATE
I-Wen Yang, PE	REVIEWED BY	2/26/2026 DATE

CITY OF KIRKLAND

DEPARTMENT OF PUBLIC WORKS
123 FIFTH AVENUE KIRKLAND, WA 98033
(425) 587-3800 www.kirklandwa.gov

DISCRETE INPUT MODULE RACK 1, SLOT 01 - WIRING DIAGRAM (2)

SCADA REPLACEMENT

SUPPLY STATION 2 CONTROL PANEL (S2)

REFERENCE SHEET NO.
S2-40.101B

SHEET 147 of 366

FIELD

S2

MCC – PUMP NO. 2

XX
XX
XX
XX

24VDC POWER FROM DWG 32.00

24P

24C

16 PT. 24VDC DISCRETE INPUT MODULE RACK 1, SLOT 02

BMXDDI1602

(0.5A) DF.102.00 24P	DI.102.00	DI.102.00	1 I0	PUMP NO. 2 IN HAND
DI.102.01	DI.102.01	DI.102.01	2 I1	PUMP NO. 2 IN AUTO
DI.102.02	DI.102.02	DI.102.02	3 I2	PUMP NO. 2 RUNNING
(0.5A) DF.102.03 24P	DI.102.03	DI.102.03	4 I3	SPARE
DI.102.04	DI.102.04	DI.102.04	5 I4	SPARE
DI.102.05	DI.102.05	DI.102.05	6 I5	SPARE
DI.102.06	DI.102.06	DI.102.06	7 I6	SPARE
(0.5A) DF.102.07 24P	DI.102.07	DI.102.07	8 I7	SPARE

24P

24C

(CONTINUED TO DWG 40.102B)

Know what's below. Call 811 before you dig.

DATE	NO.	REVISION	BY
X/X/X	0	BID SET	

APPROVED BY:

Rob English, PE

DATE: 3/3/2026

Ben Mahony 2/26/2026
DESIGNED BY DATE

Ben Mahony 2/26/2026
DRAWN BY DATE

I-Wen Yang, PE 2/26/2026
REVIEWED BY DATE

CITY OF KIRKLAND WASHINGTON

CITY OF KIRKLAND
DEPARTMENT OF PUBLIC WORKS
123 FIFTH AVENUE KIRKLAND, WA 98033
(425) 587–3800 www.kirklandwa.gov

DISCRETE INPUT MODULE RACK 1, SLOT 02 - WIRING DIAGRAM (1)

SCADA REPLACEMENT

SUPPLY STATION 2 CONTROL PANEL (S2)

REFERENCE SHEET NO.
S2-40.102A

FIELD

S2

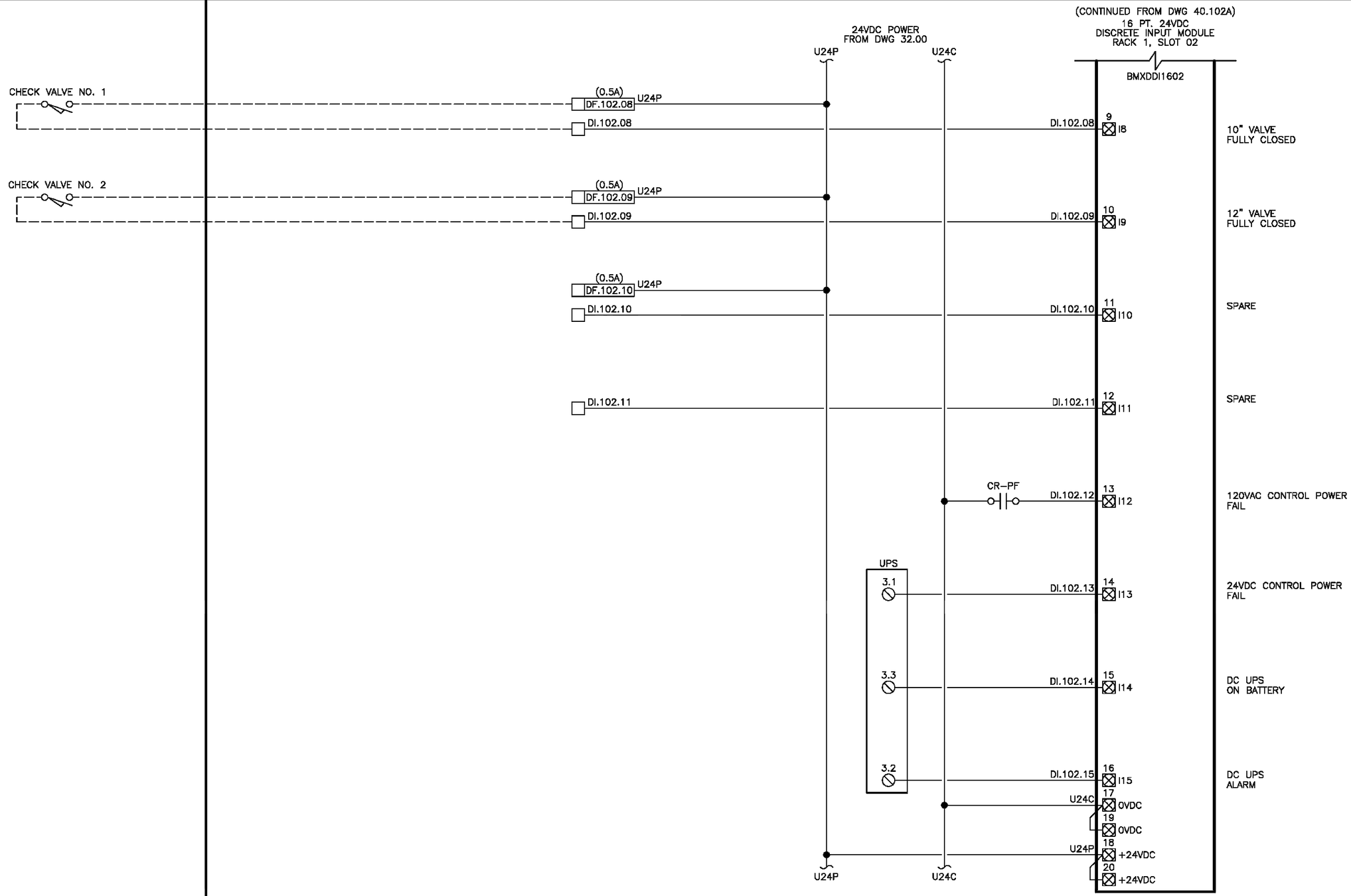

Know what's below. Call 811 before you dig.

DATE	NO.	REVISION	BY
X/X/X	0	BID SET	

APPROVED BY:

Rob English, PE

DATE: 3/3/2026

Ben Mahony	DESIGNED BY	2/26/2026 DATE
Ben Mahony	DRAWN BY	2/26/2026 DATE
I-Wen Yang, PE	REVIEWED BY	2/26/2026 DATE

CITY OF KIRKLAND

DEPARTMENT OF PUBLIC WORKS
123 FIFTH AVENUE KIRKLAND, WA 98033
(425) 587-3800 www.kirklandwa.gov

DISCRETE INPUT MODULE RACK 1, SLOT 02 - WIRING DIAGRAM (2)

SCADA REPLACEMENT

SUPPLY STATION 2 CONTROL PANEL (S2)

REFERENCE SHEET NO.
S2-40.102B

SHEET 149 of 366

FIELD

S2

MCC – PUMP NO. 1
XX
XX

MCC – PUMP NO. 2
XX
XX

VENTILATION FAN
XX
XX

545 ZONE HYDRAULIC CONTROL VALVE NO. 1
SV1–1
OPEN
SV1–2
CLOSE
SV1–3
PRV

545 ZONE HYDRAULIC CONTROL VALVE NO. 2
SV2–1
OPEN
SV2–2
CLOSE

(CONT'D TO DWG S2–40.103B)

CR.103.00A
CR.103.00B
CR.103.00

CR.103.01A
CR.103.01B
CR.103.01

CR.103.02A
CR.103.02B
CR.103.02

120VAC POWER FROM DWG 31.00
N1
AC102

N1
CR.103.03
CR.103.03

N1
CR.103.04
CR.103.04

N1
CR.103.05
CR.103.05

N1
CR.103.06
CR.103.06

N1
CR.103.07
CR.103.07

N1
AC102

24VDC POWER FROM DWG 32.00
U24P
U24C

CR 103.00
CR 103.01
CR 103.02
CR 103.03
CR 103.04
CR 103.05
CR 103.06
CR 103.07

U24P
U24C

16PT. RELAY OUTPUT MODULE RACK 1, SLOT 03
BMXDRA1605

DO.103.00 1 Q0 — PUMP NO. 1 RUN COMMAND
DO.103.01 2 Q1 — PUMP NO. 2 RUN COMMAND
DO.103.02 3 Q2 — VENTILATION FAN RUN COMMAND
DO.103.03 4 Q3 — 545 ZONE HYDRAULIC CONTROL VALVE NO.1 SOLENOID OPEN COMMAND
DO.103.04 5 Q4 — 545 ZONE HYDRAULIC CONTROL VALVE NO.1 SOLENOID CLOSE COMMAND
DO.103.05 6 Q5 — 545 ZONE HYDRAULIC CONTROL VALVE NO.1 SOLENOID PRESSURE REDUCING CALL COMMAND
DO.103.06 7 Q6 — 545 ZONE HYDRAULIC CONTROL VALVE NO.2 SOLENOID OPEN COMMAND
DO.103.07 8 Q7 — 545 ZONE HYDRAULIC CONTROL VALVE NO.2 SOLENOID CLOSE COMMAND
U24P 9 C 0–7
10 C 0–7

(CONTINUED TO DWG 40.103B)

811 Know what's below. Call 811 before you dig.

DATE	NO.	REVISION	BY
X/X/X	0	BID SET	

APPROVED BY:

Rob English, PE

DATE: 3/3/2026

Ben Mahony 2/26/2026 DESIGNED BY DATE
Ben Mahony 2/26/2026 DRAWN BY DATE
I-Wen Yang, PE 2/26/2026 REVIEWED BY DATE

CITY OF KIRKLAND WASHINGTON

CITY OF KIRKLAND
DEPARTMENT OF PUBLIC WORKS
123 FIFTH AVENUE KIRKLAND, WA 98033
(425) 587–3800 www.kirklandwa.gov

DISCRETE INPUT MODULE RACK 1, SLOT 03 - WIRING DIAGRAM (1)

SCADA REPLACEMENT

SUPPLY STATION 2 CONTROL PANEL (S2)

REFERENCE SHEET NO.
S2-40.103A

FIELD

S2

(CONT'D FROM DWG S2-40.103A)

SV2-3

PRV

PUMP NO. 1 LOCKOUT

XX

XX

PUMP NO. 2 LOCKOUT

XX

XX

N1

AC102

U24P

U24C

24VDC POWER FROM DWG 32.00

(CONTINUED FROM DWG 40.103A)

16 PT. RELAY OUTPUT MODULE RACK 1, SLOT 03

BMXDRA1605

N1	CR.103.08	CR 103.08	DO.103.08	11 Q8 — 545 ZONE HYDRAULIC CONTROL VALVE NO.2 SOLENOID PRESSURE REDUCING CALL COMMAND
CR.103.09A	CR.103.09B	CR 103.09	DO.103.09	12 Q9 — PUMP NO. 1 LOCKOUT
CR.103.10A	CR.103.10B	CR 103.10	DO.103.10	13 Q10 — PUMP NO. 2 LOCKOUT
CR.103.11A	CR.103.11B	CR 103.11	DO.103.11	14 Q11 — SPARE
CR.103.12A	CR.103.12B	CR 103.12	DO.103.12	15 Q12 — SPARE
CR.103.13A	CR.103.13B	CR 103.13	DO.103.13	16 Q13 — SPARE
CR.103.14A	CR.103.14B	CR 103.14	DO.103.14	17 Q14 — SPARE
CR.103.15A	CR.103.15B	CR 103.15	DO.103.15	18 Q15 — SPARE

WW

19 C 8-15

20 C 8-15

Know what's below. Call 811 before you dig.

DATE	NO.	REVISION	BY
X/X/X	0	BID SET	

APPROVED BY:

Rob English, PE

DATE: 3/3/2026

Ben Mahony 2/26/2026 DESIGNED BY DATE

Ben Mahony 2/26/2026 DRAWN BY DATE

I-Wen Yang, PE 2/26/2026 REVIEWED BY DATE

CITY OF KIRKLAND WASHINGTON

CITY OF KIRKLAND

DEPARTMENT OF PUBLIC WORKS

123 FIFTH AVENUE KIRKLAND, WA 98033

(425) 587-3800 www.kirklandwa.gov

DISCRETE INPUT MODULE RACK 1, SLOT 03 - WIRING DIAGRAM (2)

SCADA REPLACEMENT

SUPPLY STATION 2 CONTROL PANEL (S2)

REFERENCE SHEET NO. S2-40.103B

SHEET 151 of 366

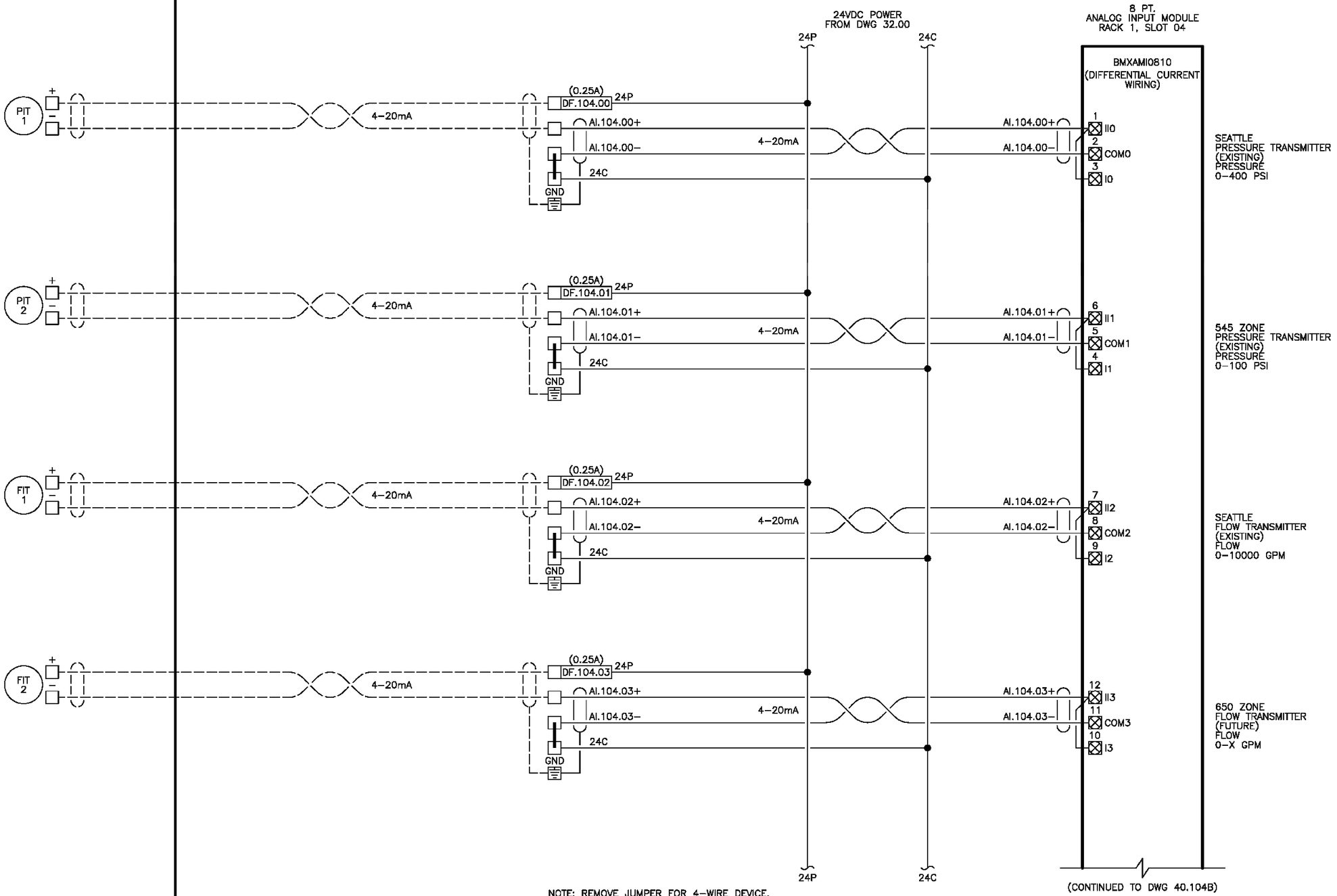

NOTE: REMOVE JUMPER FOR 4–WIRE DEVICE.

Know what's below. Call 811 before you dig.

DATE	NO.	REVISION	BY
X/X/X	0	BID SET	

APPROVED BY:

Rob English, PE

DATE: 3/3/2026

Ben Mahony (DESIGNED BY)	2/26/2026 (DATE)
Ben Mahony (DRAWN BY)	2/26/2026 (DATE)
I-Wen Yang, PE (REVIEWED BY)	2/26/2026 (DATE)

CITY OF KIRKLAND WASHINGTON

CITY OF KIRKLAND
DEPARTMENT OF PUBLIC WORKS
123 FIFTH AVENUE KIRKLAND, WA 98033
(425) 587–3800 www.kirklandwa.gov

DISCRETE INPUT MODULE RACK 1, SLOT 04 - WIRING DIAGRAM (1)

SCADA REPLACEMENT

SUPPLY STATION 2 CONTROL PANEL (S2)

REFERENCE SHEET NO.
S2-40.104A

FIELD

S2

(CONTINUED FROM DWG 40.104A)

8 PT.
ANALOG INPUT MODULE
RACK 1, SLOT 04

BMXAMI0810
(DIFFERENTIAL CURRENT WIRING)

24VDC POWER
FROM DWG 32.00

24P

24C

PIT 3 (+ / −) — 4–20mA

(0.25A) DF.104.04 24P

AI.104.04+

AI.104.04−

24C

GND

4–20mA

AI.104.04+ → 15 II4

AI.104.04− → 16 COM4

17 I4

650 ZONE
PRESSURE TRANSMITTER
(FUTURE)
PRESSURE
0–X PSI

PIT 4 (+ / −) — 4–20mA

(0.25A) DF.104.05 24P

AI.104.05+

AI.104.05−

24C

GND

4–20mA

AI.104.05+ → 20 II5

AI.104.05− → 19 COM5

18 I5

545 ZONE
PRESSURE TRANSMITTER
PRESSURE
0–100 PSI

(0.25A) DF.104.06 24P

AI.104.06+

AI.104.06−

24C

GND

4–20mA

AI.104.06+ → 21 II6

AI.104.06− → 22 COM6

23 I6

SPARE

(0.25A) DF.104.07 24P

AI.104.07+

AI.104.07−

24C

GND

4–20mA

AI.104.07+ → 26 II7

AI.104.07− → 25 COM7

24 I7

SPARE

24P

24C

NOTE: REMOVE JUMPER FOR 4–WIRE DEVICE.

Know what's below. Call 811 before you dig.

DATE	NO.	REVISION	BY
X/X/X	0	BID SET	

APPROVED BY:

Rob English, PE

DATE: 3/3/2026

Ben Mahony 2/26/2026
DESIGNED BY DATE

Ben Mahony 2/26/2026
DRAWN BY DATE

I-Wen Yang, PE 2/26/2026
REVIEWED BY DATE

CITY OF KIRKLAND
WASHINGTON

CITY OF KIRKLAND
DEPARTMENT OF PUBLIC WORKS
123 FIFTH AVENUE KIRKLAND, WA 98033
(425) 587–3800 www.kirklandwa.gov

DISCRETE INPUT MODULE RACK 1, SLOT 04 - WIRING DIAGRAM (2)

SCADA REPLACEMENT

SUPPLY STATION 2 CONTROL PANEL (S2)

REFERENCE SHEET NO.
S2-40.
104B

SHEET
153
of
366

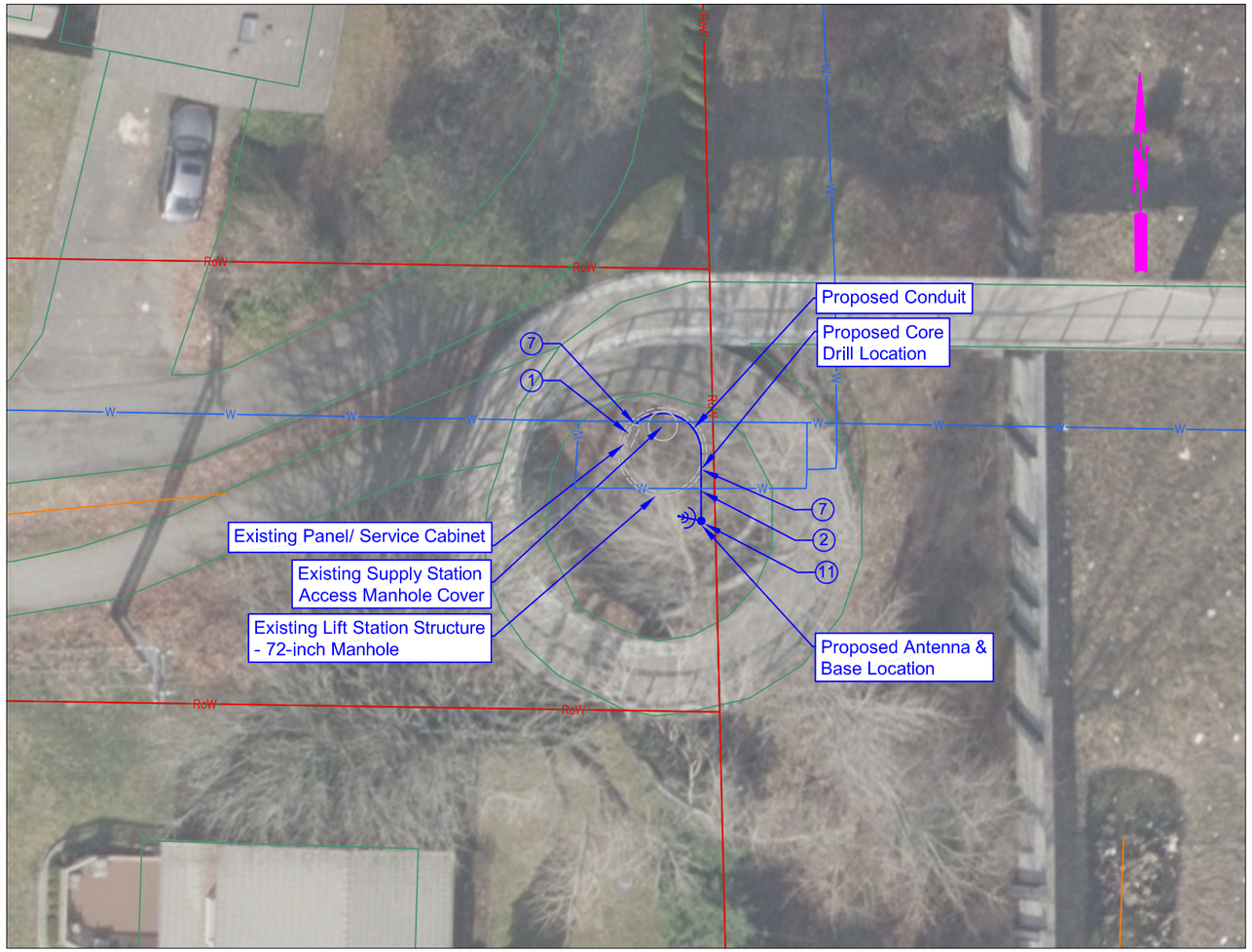

20 10 0 20 40

SITE: K1
UTILITY: Water
PROJECT ADDRESS: NE 60th and 114th Ave, Kirkland WA 98033

GIS DISCLAIMER:
The as-built and utility information shown in the project plans are based on the City of Kirkland's available GIS information. Thus, the contractor shall field verify all of the proposed conditions and limits. Additionally, the contractor shall call for utility locates at least 48 hours prior to any trenching or excavation work to field verify that no utility conflicts exist with the proposed excavation limits.

A EAST VIEW
NOT TO SCALE

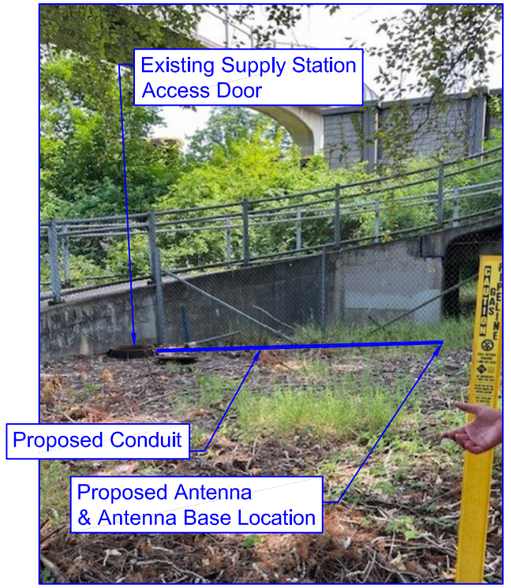

B WEST VIEW
NOT TO SCALE

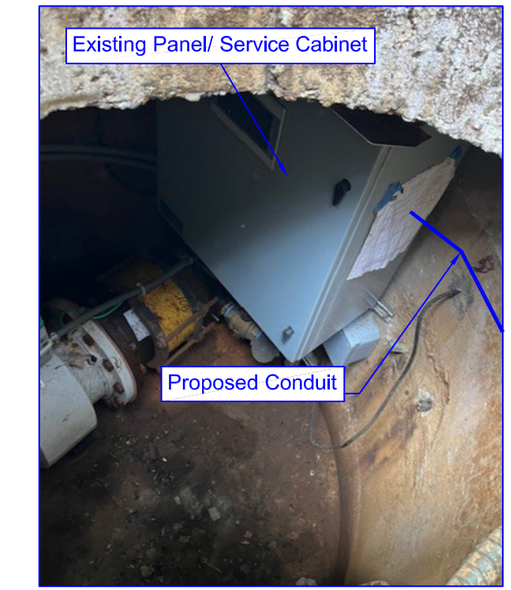

CONSTRUCTION NOTES:

1. TO REPLACE PANEL AND UPDATE THE SOFTWARE IN THE SERVICE CABINET PER THE SITE-SPECIFIC BILL OF MATERIALS (BOM'S).
2. TO INSTALL 4-INCH SCH. 40 CONDUIT PIPING AND REPLACE BACKFILL WITH NATIVE SOILS, IN KIND.
3. TO PROTECT EXISTING BURIED UTILITY, SEE GENERAL NOTE 1.
4. TO PROTECT EXISTING BURIED POWER AND/ OR FRANCHISE UTILITY, SEE GENERAL NOTE 1.
5. TO INSTALL FIBER CABLE THROUGH EXISTING FIBER CONDUIT.
6. TO REMOVE AND REPLACE CONCRETE SIDEWALK.
7. TO CORE-DRILL HOLE(S) INTO EXISTING STRUCTURE AND/ OR EXISTING SERVICE CABINET.
8. TO INSTALL EXTERNAL MOUNTED LOW-PROFILE (4 FT HIGH POLE HEIGHT) ANTENNA PER ANTENNA STANDARD DETAIL.
9. TO INSTALL EXTERNAL MOUNTED HIGH-PROFILE (20 FT HIGH POLE HEIGHT) ANTENNA PER ANTENNA STANDARD DETAIL.
10. TO INSTALL INTERNAL PANEL-MOUNTED LOW-PROFILE (2 FT HIGH POLE HEIGHT) ANTENNA PER ANTENNA STANDARD DETAIL.
11. TO INSTALL FULL-PROFILE (20 FT HIGH POLE HEIGHT) ANTENNA WITH A CONCRETE ANCHOR PER ANTENNA AND ANTENNA BASE STANDARD DETAIL.
12. TO SALVAGE AND REUSE EXISTING ANTENNA STRUCTURE AND INSTALL PROPOSED ANTENNA EQUIPMENT.
13. TO REMOVE EXISTING YAGI ANTENNA ON THE EXISTING ANTENNA POLE STRUCTURE.
14. TO INSTALL NEMA 4X ENCLOSURE ON PROPOSED OR EXISTING ANTENNA POLE STRUCTURE WITH THE NEW MODEM INSIDE THE ENCLOSURE.
15. TO INSTALL FIBER CONNECTION IN EXISTING FIBER CONDUIT.
16. TO INSTALL FIBER CONNECTION IN EXISTING SIGNAL CABINET/ JUNCTION BOX.

GENERAL NOTES:

1. UTILITY LOCATIONS SHOWN ARE APPROXIMATE AND BASED ON AVAILABLE GIS, FIELD OBSERVATIONS, AND UTILITY LOCATES. CONTRACTOR SHALL VERIFY PRIOR TO CONSTRUCTION.
2. SEWER STRUCTURE DATA AND LOCATIONS SHOWN ARE APPROXIMATE BASED ON AVAILABLE CITY GIS AND AS-BUILT RECORDS. THE CONTRACTOR SHALL CONDUCT PIPE AND SITE VERIFICATION PRIOR TO PROCEEDING WITH CONSTRUCTION.
3. CITY SHALL COORDINATE AND SECURE ANY NECESSARY AGREEMENTS AND/ OR EASEMENT WITH PROPERTY PRIOR TO ANY WORK ON PRIVATE PROPERTY. NO WORK SHALL BE PERFORMED OUTSIDE OF THE RIGHT-OF-WAY WITHOUT PRIOR AUTHORIZATION BY THE ENGINEER.
4. IF DISTURBED, HMA PAVEMENT SECTION SHALL BE REPLACED PER PRE-APPROVED PLAN NO. CK-R.12.

LEGEND:

- PROPOSED CONDUIT INSTALLATION
- PROPOSED FIBER INSTALLATION
- PROPOSED ANTENNA & BASE LOCATION
- PROPOSED REMOVAL/ REPLACEMENT OF SIDEWALK
- EXISTING STRUCTURE
- EXISTING STRUCTURE (HIDDEN)
- SS — EXISTING SANITARY SEWER UTILITY
- EXISTING SANITARY SEWER MANHOLE
- SD — EXISTING STORM DRAIN PIPE
- EXISTING EXISTING STORM DRAIN CATCH BASIN
- W — EXISTING EXISTING WATER PIPE UTILITY
- EXISTING EXISTING WATER METER UTILITY
- EXISTING WATER HYDRANT
- EXISTING WATER VALVE UTILITY
- RoW — EXISTING RIGHT-OF-WAY LINE
- PL — EXISTING EXISTING PROPERTY LINE
- GAS — EXISTING GAS UTILITY
- EXISTING GAS METER UTILITY
- X — SITE IMAGE REF. SEE NOTE X

811 Know what's below. Call 811 before you dig.

DATE	NO.	REVISION	BY
X/X/X	0	BID SET	

APPROVED BY:

Rob English, PE

DATE: 3/3/2026

Ben Mahony	DESIGNED BY	2/26/2026 DATE
Ben Mahony	DRAWN BY	2/26/2026 DATE
I-Wen Yang, PE	REVIEWED BY	2/26/2026 DATE

CITY OF KIRKLAND
DEPARTMENT OF PUBLIC WORKS
123 FIFTH AVENUE KIRKLAND, WA 98033
(425) 587-3800 www.kirklandwa.gov

SCADA REPLACEMENT

K1 SITE IMPROVEMENTS

REFERENCE SHEET NO. K1_IMP _01

SHEET 154 of 366

PRESSURE STATION K1					
PartID	**Qty**	**Specification**	**Manufacturer Part Number**	**Description**	**Manufacturer**
430A	1	No Equal	IE-3100-8T2C-E	Cisco Catalyst IE3100 Rugged Series - Switch - 8 x 10/100/1000 + 2 x combo Gigabit - DIN rail mountable - PACL, VACL	Cisco
430B	1	No Equal	SD-IE-1GB	Cisco - Flash memory card - 1 GB - SD	Cisco
455A	1	No Equal	cMT3092Xv2	Smart HMI, 9.7", Resolution 1024 x 768, Dark Grey Bezel, 1.6 GHz CPU, 4 GB Flash Memory, 1 GB DRAM, UL Listed, Ethernet, 24VDC	Maple Systems
470A	1	No Equal	MAX-BR1-MINI-LTE-US-T-M-PRM	Peplink MAX BR1 Mini Core LTE - US - No WiFi - No GPS - AC Adapter & 2x SMA Cellular Anetenna Connectors	Peplink
470B	1	No Equal		DC Power Cable ES/GX/MP/RV/LX/IBR	Peplink
470C	1	No Equal	ACW-DIN-BR1-MINI	DIN Rail mount kit	Peplink
471A	2	Or Approved Equal	POLTSX-NFF	Cell Surge Arrestor 0.698-2.7GHz DC Block Coax Protect, N-Female/N-Female connector	PolyPhaser
471B	ASRQ	Or Approved Equal	TIMLMR-400-DB	Watertight LMR400 Cable Black PE Jacket	Times Microwave
471C	ASRQ	Or Approved Equal	R/FCOMP-NM-400	Conn, N-Male Compression Style for Plenum LMR400 Cable	RF Industries
471D	2	Or Approved Equal	ANXTRA6927M3PB-001	3G/4G Multi-Band Phantom Antenna for 698-960/1700-2700 MHz. Black. 3.3" Radome. N Female.	Laird
471E	2	Or Approved Equal	CUSTOM BRACKET	Stainless Steel Custom Bracket - 14"x 02"	Custom

Know what's below. Call 811 before you dig.

DATE	NO.	REVISION	BY
X/X/X	0	BID SET	

APPROVED BY:

Rob English, PE

DATE: 3/3/2026

Ben Mahony	DESIGNED BY	2/26/2026 DATE
Ben Mahony	DRAWN BY	2/26/2026 DATE
I-Wen Yang, PE	REVIEWED BY	2/26/2026 DATE

CITY OF KIRKLAND WASHINGTON

CITY OF KIRKLAND

DEPARTMENT OF PUBLIC WORKS
123 FIFTH AVENUE KIRKLAND, WA 98033
(425) 587–3800 www.kirklandwa.gov

SCADA REPLACEMENT

K1 - BILL OF MATERIALS

REFERENCE SHEET NO.
K1_BM_01

SHEET 155 of 366

		PANEL NAME:	K1 CONTROL PANEL															
		PANEL NUMBER:	K1															
TAG Prefix	Loop Desc. 1	Loop Desc. 2	LOOP #	PLC/HMI Tag	DESCRIPTION 1	DESCRIPTION 2	DESCRIPTION 3	FUNCTION	TYPE	Rack	Slot	Point	Units	Min	Max	P&ID Dwg	NOTES
			-		FLOOD			ALARM	DI	1	1	0					
			-		ENCLOSURE	INTRUSION		ALARM	DI	1	1	1					
			-		Spare				DI	1	1	2					
			-		120VAC POWER			FAIL	DI	1	1	3					
			-		24VDC POWER			FAIL	DI	1	1	4					
			-		Spare				DI	1	1	5					
			-		Spare				DI	1	1	6					
			-		Spare				DI	1	1	7					
			-		Spare				DI	1	1	8					
			-		Spare				DI	1	1	9					
			-		Spare				DI	1	1	10					
			-		Spare				DI	1	1	11					
			-		Spare				DI	1	1	12					
			-		Spare				DI	1	1	13					
			-		Spare				DI	1	1	14					
			-		Spare				DI	1	1	15					
			-		FIT-K1	SYSTEM		FLOW	AI	1	2	0	%	0	5500	GPM	
			-		Spare				AI	1	2	1					
			-		Spare				AI	1	2	2					
			-		Spare				AI	1	2	3					

Know what's below. Call 811 before you dig.

DATE	NO.	REVISION	BY
X/X/X	0	BID SET	

APPROVED BY:

Rob English, PE

DATE: 3/3/2026

Ben Mahony	2/26/2026
DESIGNED BY	DATE
Ben Mahony	2/26/2026
DRAWN BY	DATE
I-Wen Yang, PE	2/26/2026
REVIEWED BY	DATE

CITY OF KIRKLAND WASHINGTON

CITY OF KIRKLAND
DEPARTMENT OF PUBLIC WORKS
123 FIFTH AVENUE KIRKLAND, WA 98033
(425) 587–3800 www.kirklandwa.gov

SCADA REPLACEMENT

K1 - I/O LIST

REFERENCE SHEET NO. K1_IO_01

CONTROL PANEL

NETWORK: 192.168.13.0
MASK: 255.255.255.0
DEFAULT GATEWAY: 192.168.13.1

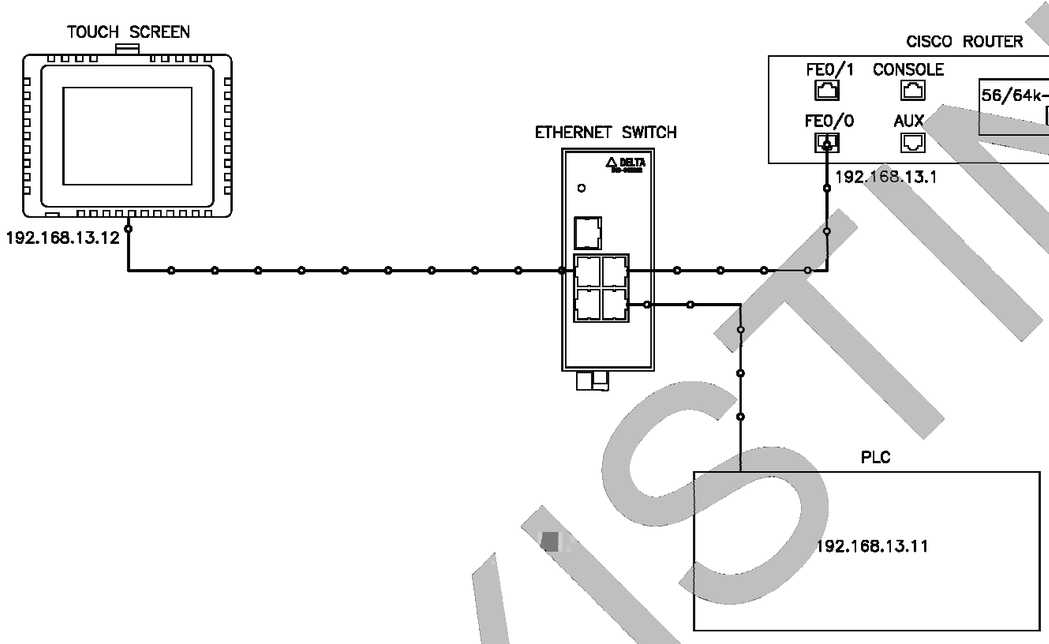

FRAME RELAY BOX

CIRCUIT ID: 86.QEFS.642817..FTNC

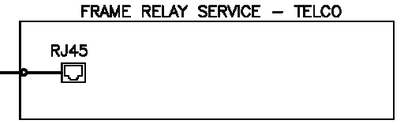

CAT-5e CABLE

EXISTING

NO.	DATE	REVISION	BY
0	X/X/X	BID SET	

APPROVED BY:

Rob English, PE

DATE: 3/3/2026

Ben Mahony (DESIGNED BY)	2/26/2026 (DATE)
Ben Mahony (DRAWN BY)	2/26/2026 (DATE)
I-Wen Yang, PE (REVIEWED BY)	2/26/2026 (DATE)

CITY OF KIRKLAND
DEPARTMENT OF PUBLIC WORKS
123 FIFTH AVENUE KIRKLAND, WA 98033
(425) 587-3800 www.kirklandwa.gov

NETWORK DIAGRAM

SCADA REPLACEMENT

K1 EXISTING CONTROL PANEL (REFERENCE)

REFERENCE SHEET NO.
K1-B01

SHEET 157 of 366

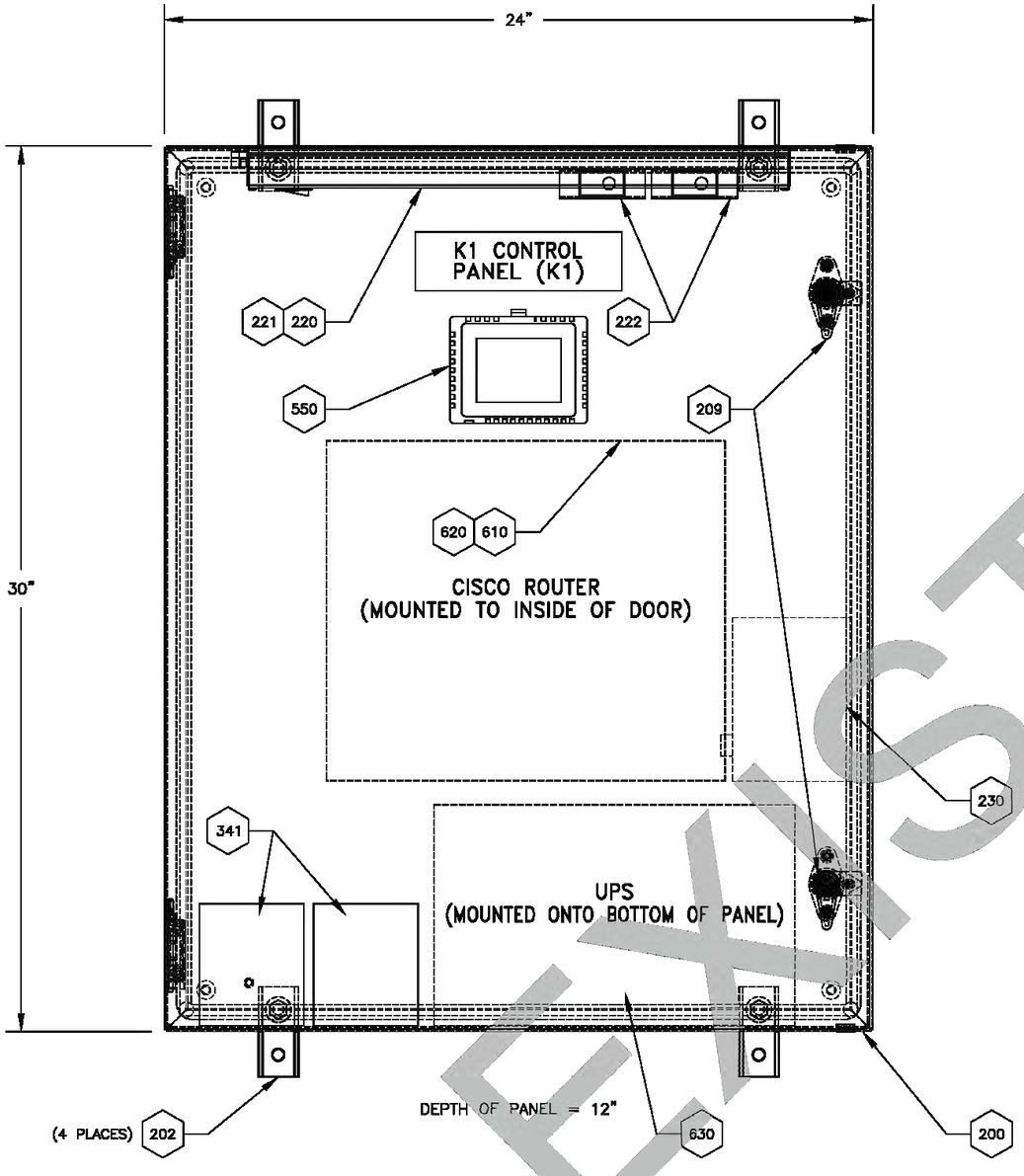

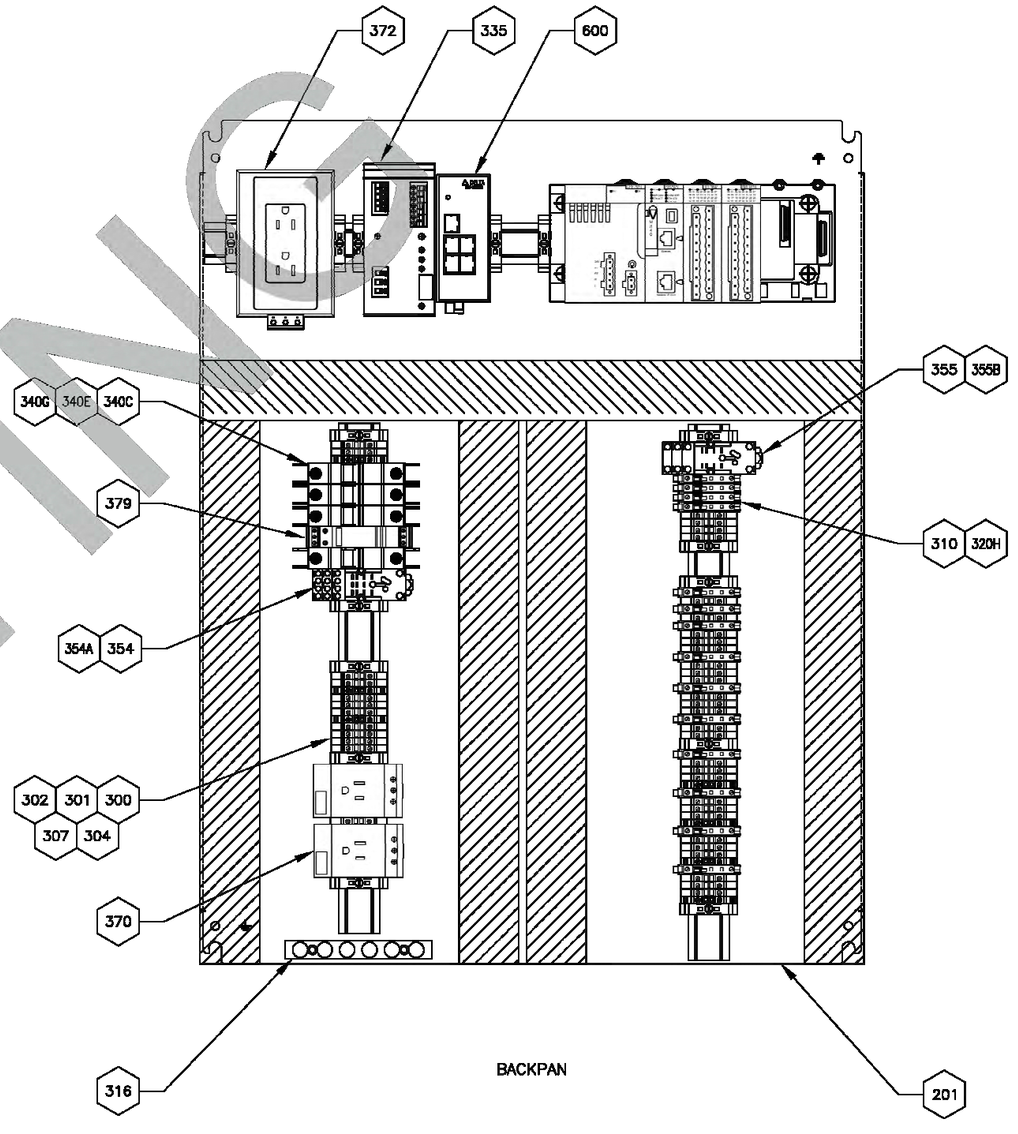

XXX BOM ITEM NUMBER

EXISTING

DATE	NO.	REVISION	BY
X/X/X	0	BID SET	

APPROVED BY:

Rob English, PE

DATE: 3/3/2026

Ben Mahony 2/26/2026 DESIGNED BY DATE

Ben Mahony 2/26/2026 DRAWN BY DATE

I-Wen Yang, PE 2/26/2026 REVIEWED BY DATE

CITY OF KIRKLAND
DEPARTMENT OF PUBLIC WORKS
123 FIFTH AVENUE KIRKLAND, WA 98033
(425) 587-3800 www.kirklandwa.gov

PANEL LAYOUT

SCADA REPLACEMENT

K1 EXISTING CONTROL PANEL (REFERENCE)

REFERENCE SHEET NO. K1-J01

SHEET 158 of 366

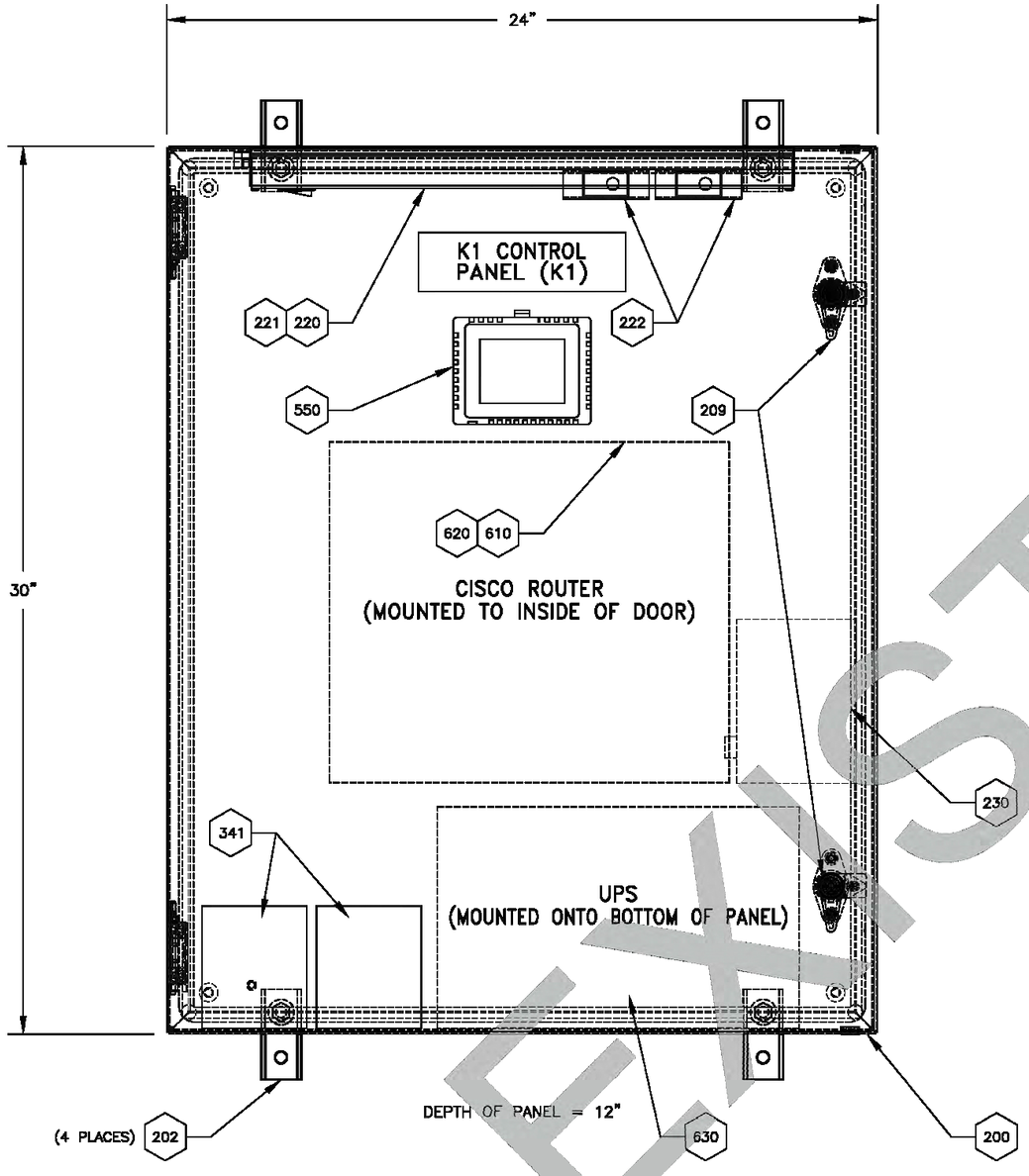

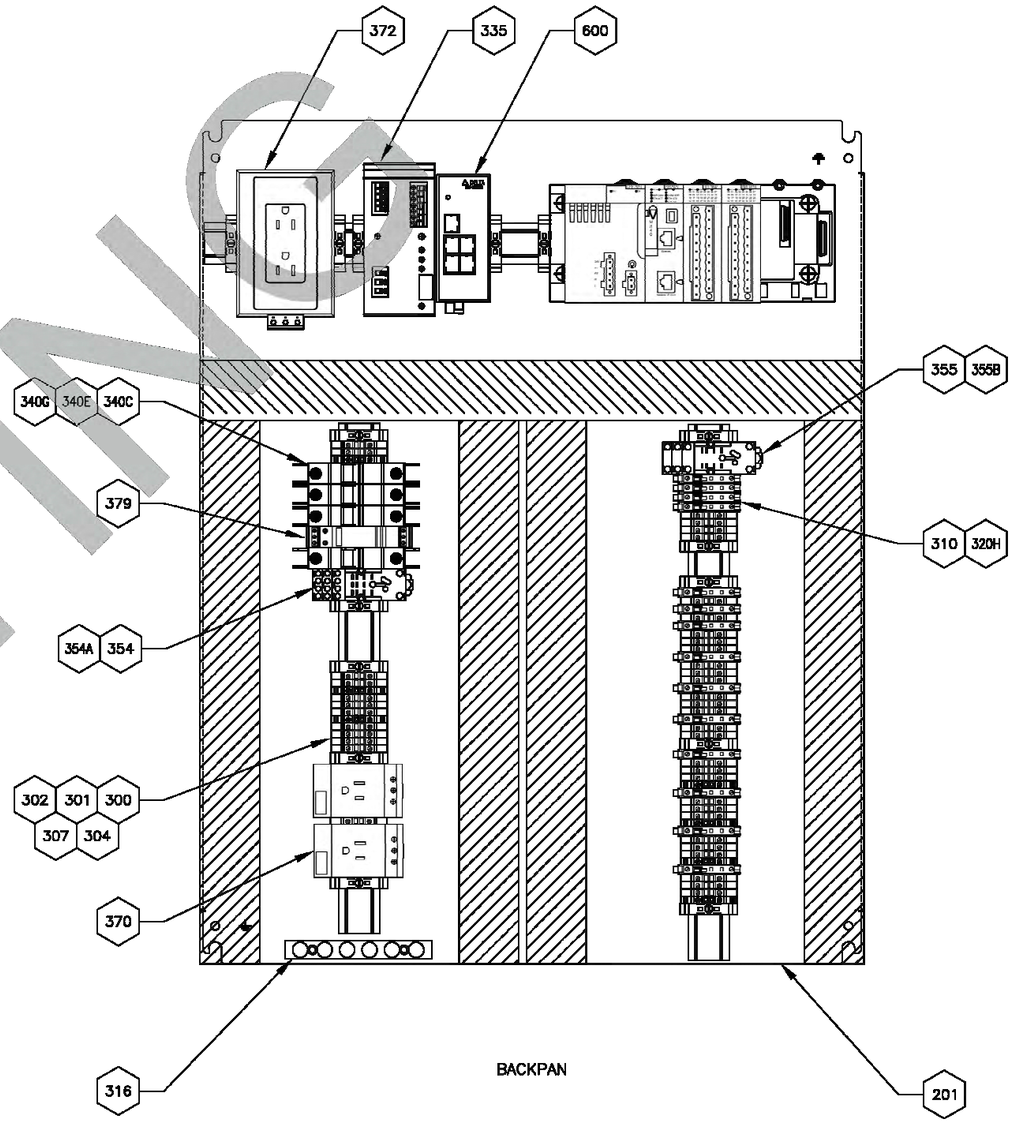

XXX BOM ITEM NUMBER

EXISTING

NO.	REVISION	BY	DATE
0	BID SET		X/X/X

APPROVED BY:

Rob English, PE

DATE: 3/3/2026

Ben Mahony (DESIGNED BY)	2/26/2026 (DATE)
Ben Mahony (DRAWN BY)	2/26/2026 (DATE)
I-Wen Yang, PE (REVIEWED BY)	2/26/2026 (DATE)

CITY OF KIRKLAND
DEPARTMENT OF PUBLIC WORKS
123 FIFTH AVENUE KIRKLAND, WA 98033
(425) 587-3800 www.kirklandwa.gov

PLC DETAIL

SCADA REPLACEMENT

K1 EXISTING CONTROL PANEL (REFERENCE)

REFERENCE SHEET NO. K1-J02

SHEET 159 of 366

RACK 1

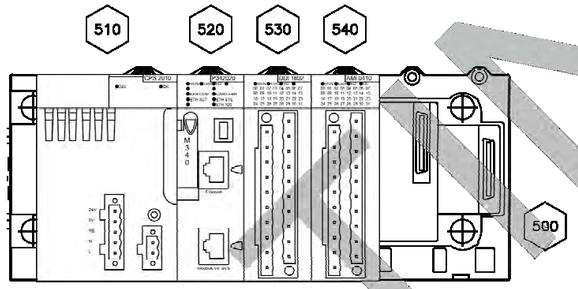

EXISTING

XXX BOM ITEM NUMBER

Know what's below. Call 811 before you dig.

DATE	NO.	REVISION	BY
X/X/X	0	BID SET	

APPROVED BY:

Rob English, PE

DATE: 3/3/2026

Ben Mahony 2/26/2026
DESIGNED BY DATE

Ben Mahony 2/26/2026
DRAWN BY DATE

I-Wen Yang, PE 2/26/2026
REVIEWED BY DATE

CITY OF KIRKLAND

DEPARTMENT OF PUBLIC WORKS
123 FIFTH AVENUE KIRKLAND, WA 98033
(425) 587-3800 www.kirklandwa.gov

NAMEPLATE DETAIL

SCADA REPLACEMENT

K1 EXISTING CONTROL PANEL (REFERENCE)

REFERENCE SHEET NO.
K1-J03

SHEET 160 of 366

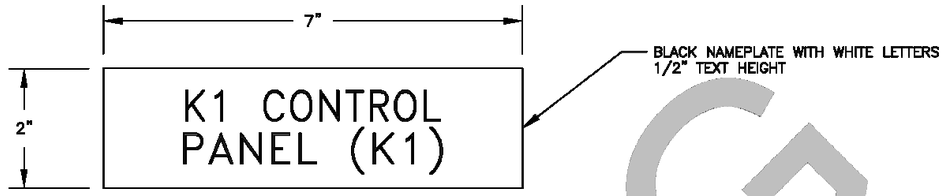

EXISTING

XXX BOM ITEM NUMBER

DATE	NO.	REVISION	BY
X/X/X	0	BID SET	

Know what's below. Call 811 before you dig.

APPROVED BY:

Rob English, PE

DATE: 3/3/2026

Ben Mahony (DESIGNED BY)	2/26/2026 (DATE)
Ben Mahony (DRAWN BY)	2/26/2026 (DATE)
I-Wen Yang, PE (REVIEWED BY)	2/26/2026 (DATE)

CITY OF KIRKLAND

DEPARTMENT OF PUBLIC WORKS
123 FIFTH AVENUE KIRKLAND, WA 98033
(425) 587-3800 www.kirklandwa.gov

120VAC POWER DISTRIBUTION DIAGRAM

SCADA REPLACEMENT

K1 EXISTING CONTROL PANEL (REFERENCE)

REFERENCE SHEET NO.
K1-P10

SHEET 161 of 366

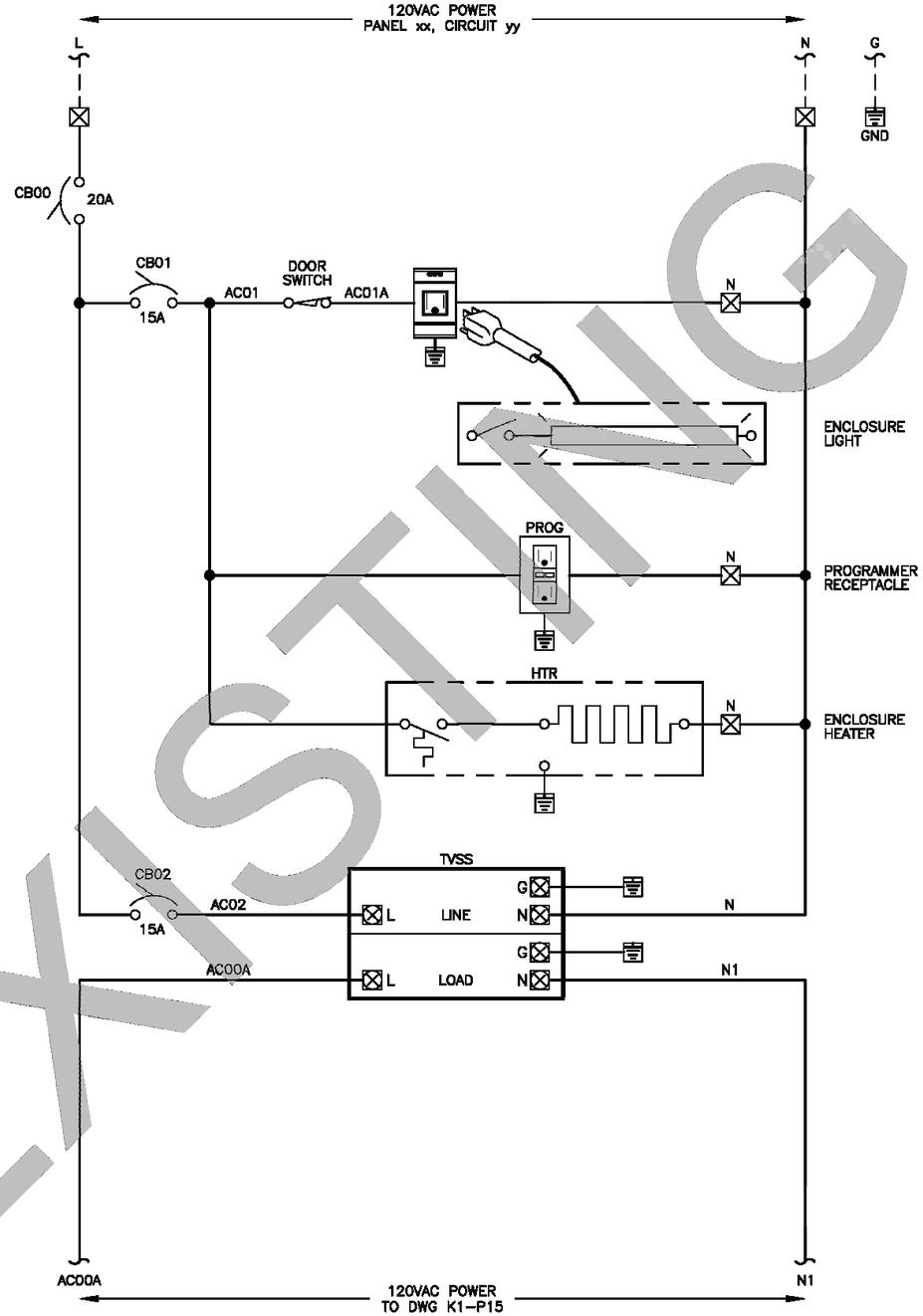

EXISTING

Know what's below. Call 811 before you dig.

DATE	NO.	REVISION	BY
X/X/X	0	BID SET	

APPROVED BY:

Rob English, PE

DATE: 3/3/2026

Ben Mahony (DESIGNED BY)	2/26/2026 (DATE)
Ben Mahony (DRAWN BY)	2/26/2026 (DATE)
I-Wen Yang, PE (REVIEWED BY)	2/26/2026 (DATE)

CITY OF KIRKLAND
DEPARTMENT OF PUBLIC WORKS
123 FIFTH AVENUE KIRKLAND, WA 98033
(425) 587-3800 www.kirklandwa.gov

120VAC UPS POWER DISTRIBUTION DIAGRAM

SCADA REPLACEMENT

K1 EXISTING CONTROL PANEL (REFERENCE)

REFERENCE SHEET NO.
K1-P15

SHEET 162 of 366

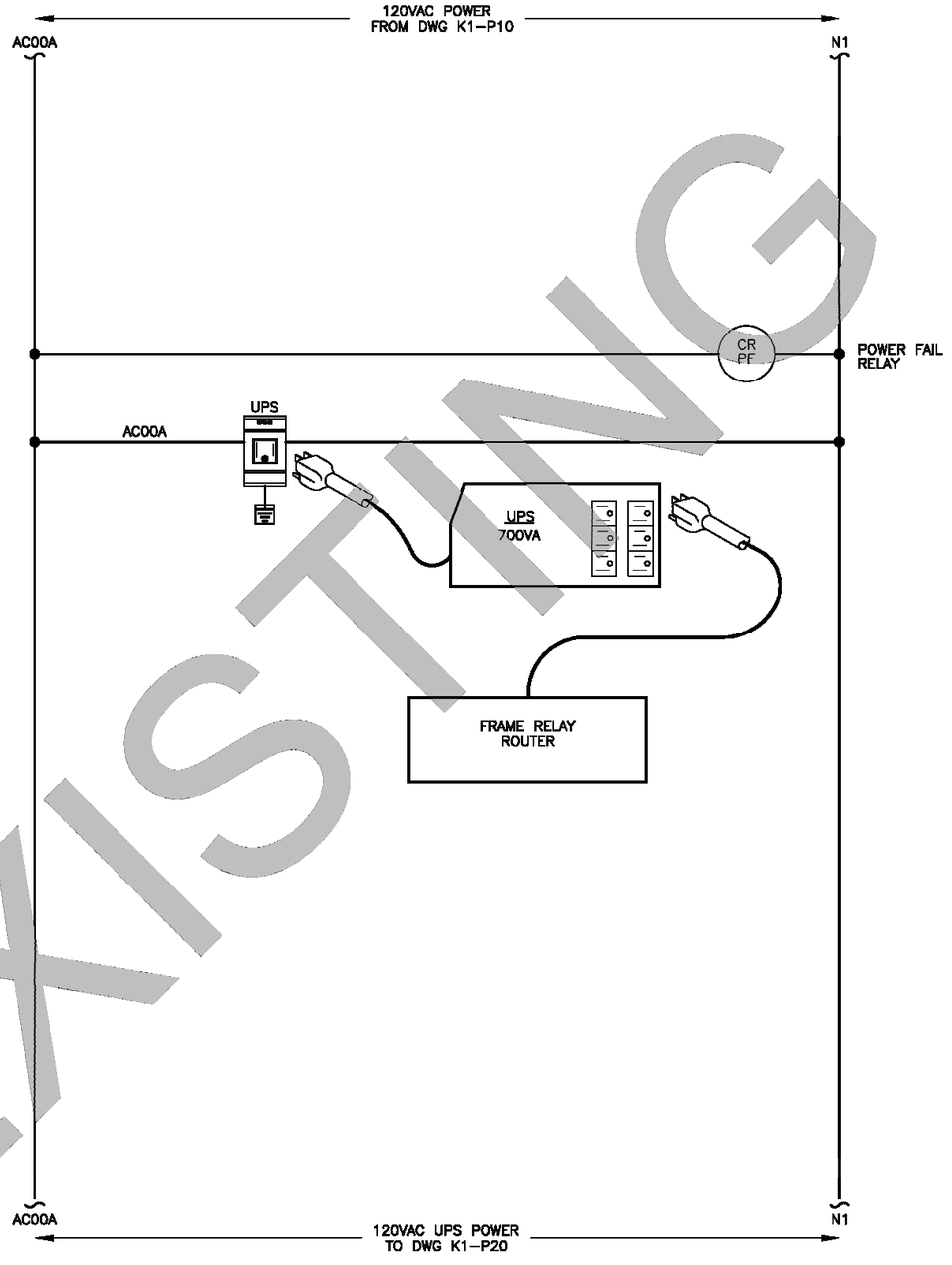

EXISTING

Know what's below. Call 811 before you dig.

DATE	NO.	REVISION	BY
X/X/X	0	BID SET	

APPROVED BY:

Rob English, PE

DATE: 3/3/2026

Ben Mahony (DESIGNED BY)	2/26/2026 (DATE)
Ben Mahony (DRAWN BY)	2/26/2026 (DATE)
I-Wen Yang, PE (REVIEWED BY)	2/26/2026 (DATE)

CITY OF KIRKLAND
DEPARTMENT OF PUBLIC WORKS
123 FIFTH AVENUE KIRKLAND, WA 98033
(425) 587-3800 www.kirklandwa.gov

24VDC POWER DISTRIBUTION DIAGRAM

SCADA REPLACEMENT

K1 EXISTING CONTROL PANEL (REFERENCE)

REFERENCE SHEET NO.
K1-P20

SHEET 163 of 366

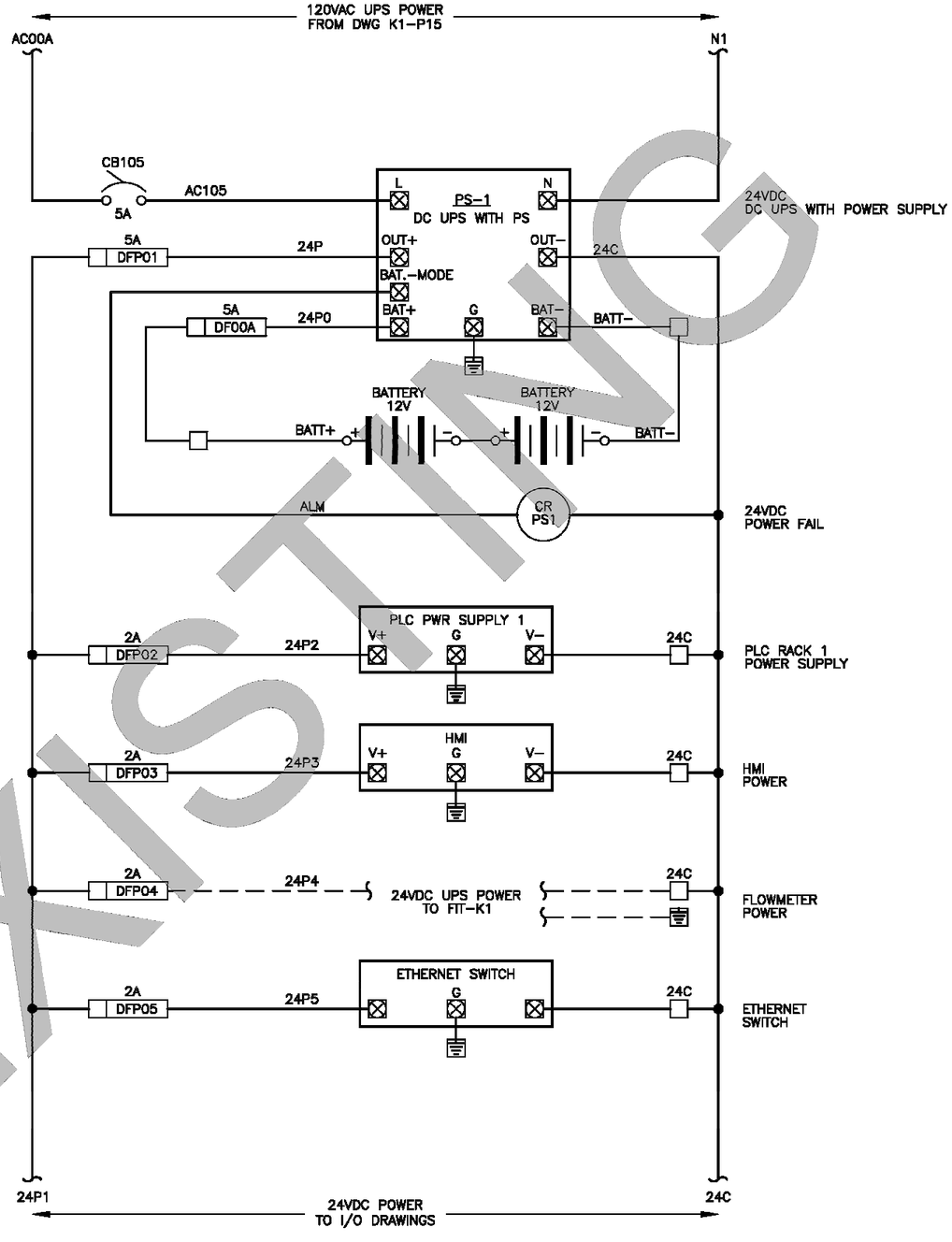

EXISTING

Know what's below. Call 811 before you dig.

DATE	NO.	REVISION	BY
X/X/X	0	BID SET	

APPROVED BY:

Rob English, PE

DATE: 3/3/2026

Ben Mahony (DESIGNED BY)	2/26/2026 (DATE)
Ben Mahony (DRAWN BY)	2/26/2026 (DATE)
I-Wen Yang, PE (REVIEWED BY)	2/26/2026 (DATE)

CITY OF KIRKLAND
DEPARTMENT OF PUBLIC WORKS
123 FIFTH AVENUE KIRKLAND, WA 98033
(425) 587-3800 www.kirklandwa.gov

DISCRETE INPUT MODULE, SLOT 01 - WIRING DIAGRAM (1)

SCADA REPLACEMENT

K1 EXISTING CONTROL PANEL (REFERENCE)

REFERENCE SHEET NO.
K1-E101A

SHEET 164 of 366

FIELD	CONTROL PANEL

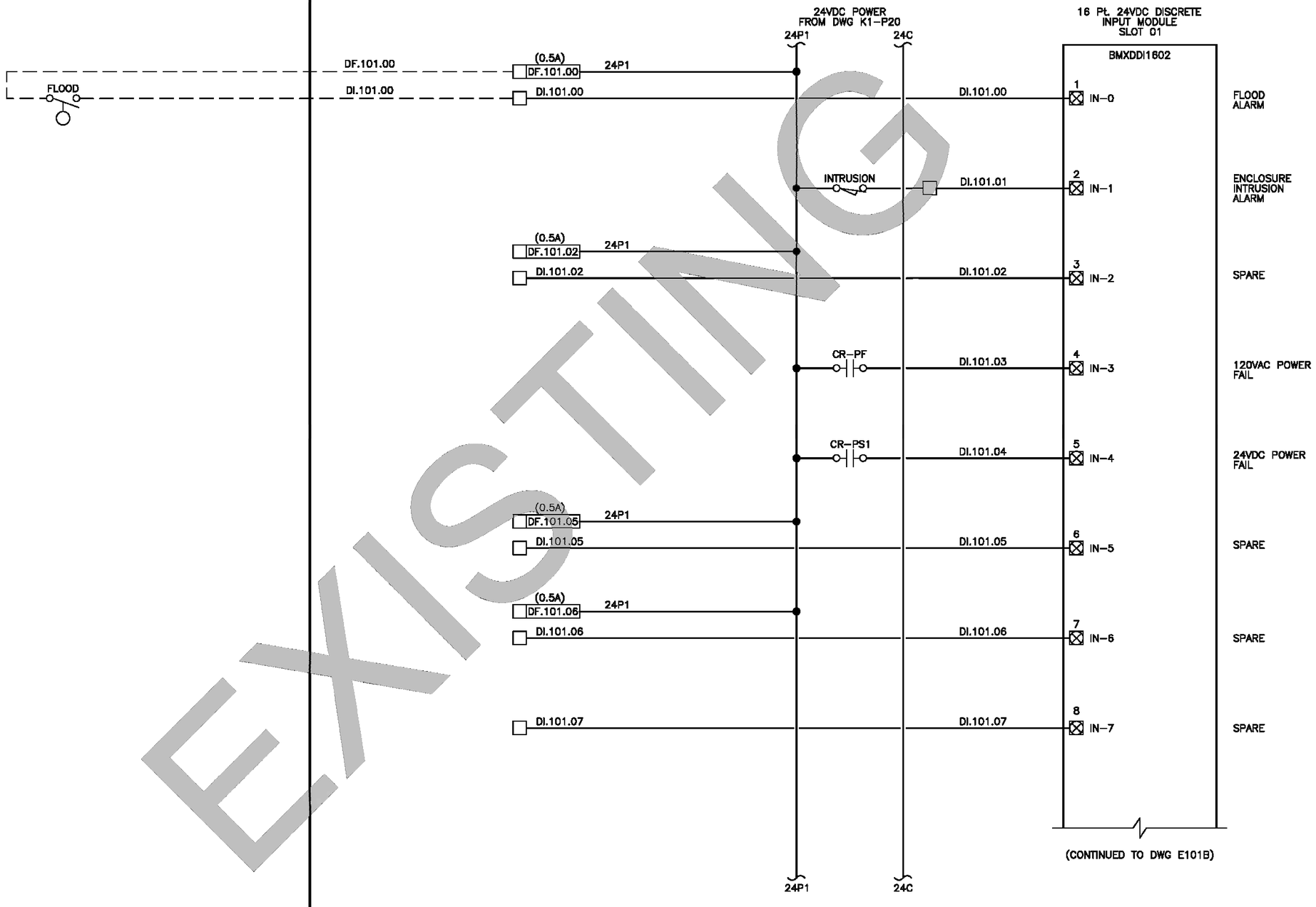

EXISTING

DATE	NO.	REVISION	BY
X/X/X	0	BID SET	

APPROVED BY:

Rob English, PE

DATE: 3/3/2026

Ben Mahony (DESIGNED BY)	2/26/2026 (DATE)
Ben Mahony (DRAWN BY)	2/26/2026 (DATE)
I-Wen Yang, PE (REVIEWED BY)	2/26/2026 (DATE)

CITY OF KIRKLAND
DEPARTMENT OF PUBLIC WORKS
123 FIFTH AVENUE KIRKLAND, WA 98033
(425) 587-3800 www.kirklandwa.gov

DISCRETE INPUT MODULE, SLOT 01 - WIRING DIAGRAM (2)

SCADA REPLACEMENT

K1 EXISTING CONTROL PANEL (REFERENCE)

REFERENCE SHEET NO.
K1-E101B

FIELD	CONTROL PANEL

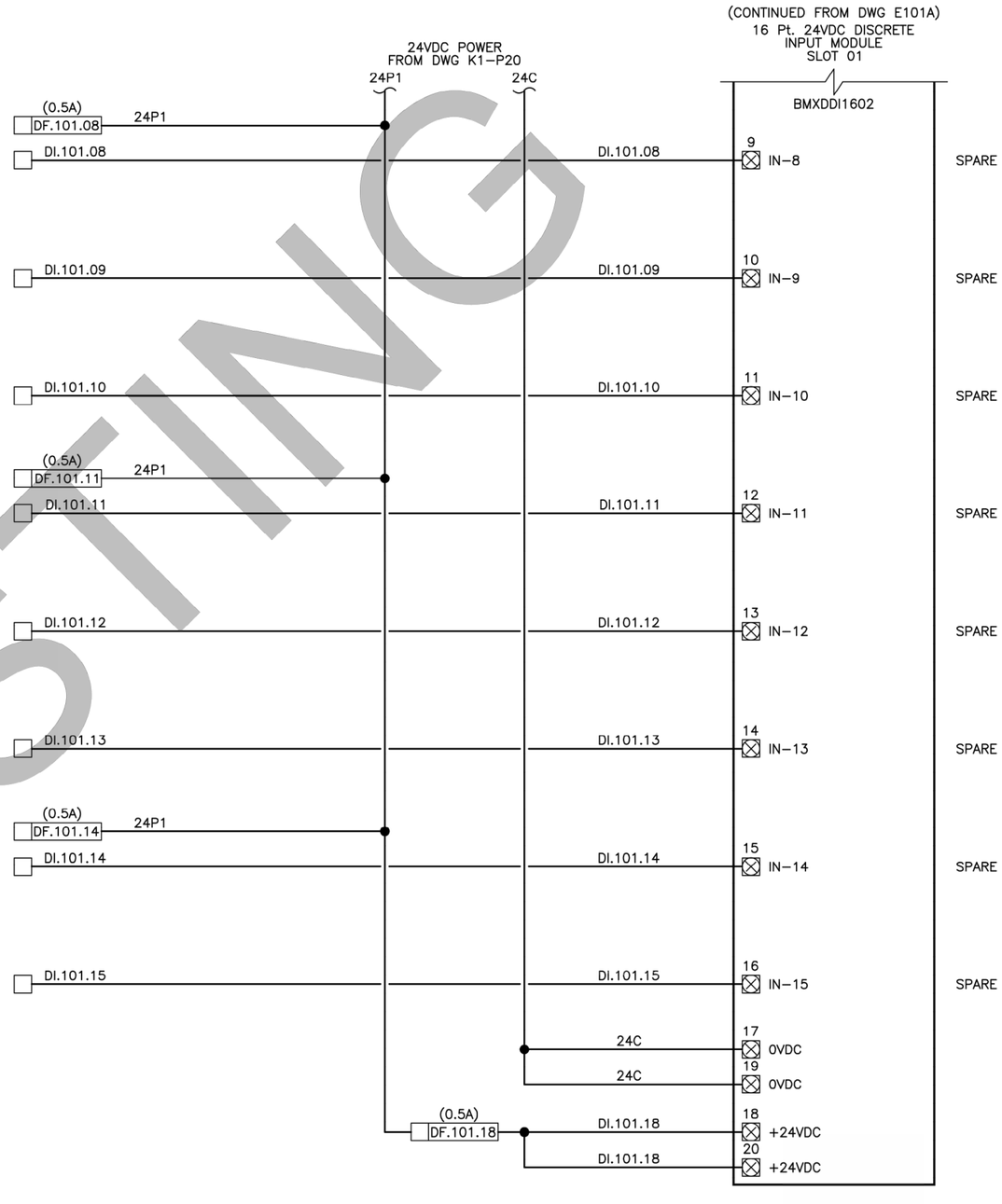

EXISTING

YURI Y. P. KOZODOY
STATE OF WASHINGTON
47157
REGISTERED PROFESSIONAL ENGINEER
EXPIRES: Oct. 26, 2018

811 Know what's below. Call 811 before you dig.

DATE	NO.	REVISION	BY
X/X/X	0	BID SET	

APPROVED BY:

Rob English, PE

DATE: 3/3/2026

Ben Mahony (DESIGNED BY)	2/26/2026 (DATE)
Ben Mahony (DRAWN BY)	2/26/2026 (DATE)
I-Wen Yang, PE (REVIEWED BY)	2/26/2026 (DATE)

CITY OF KIRKLAND WASHINGTON

CITY OF KIRKLAND
DEPARTMENT OF PUBLIC WORKS
123 FIFTH AVENUE KIRKLAND, WA 98033
(425) 587-3800 www.kirklandwa.gov

ANALOG INPUT MODULE, SLOT 02 - WIRING DIAGRAM

SCADA REPLACEMENT

K1 EXISTING CONTROL PANEL (REFERENCE)

REFERENCE SHEET NO. K1-E102

SHEET 166 of 366

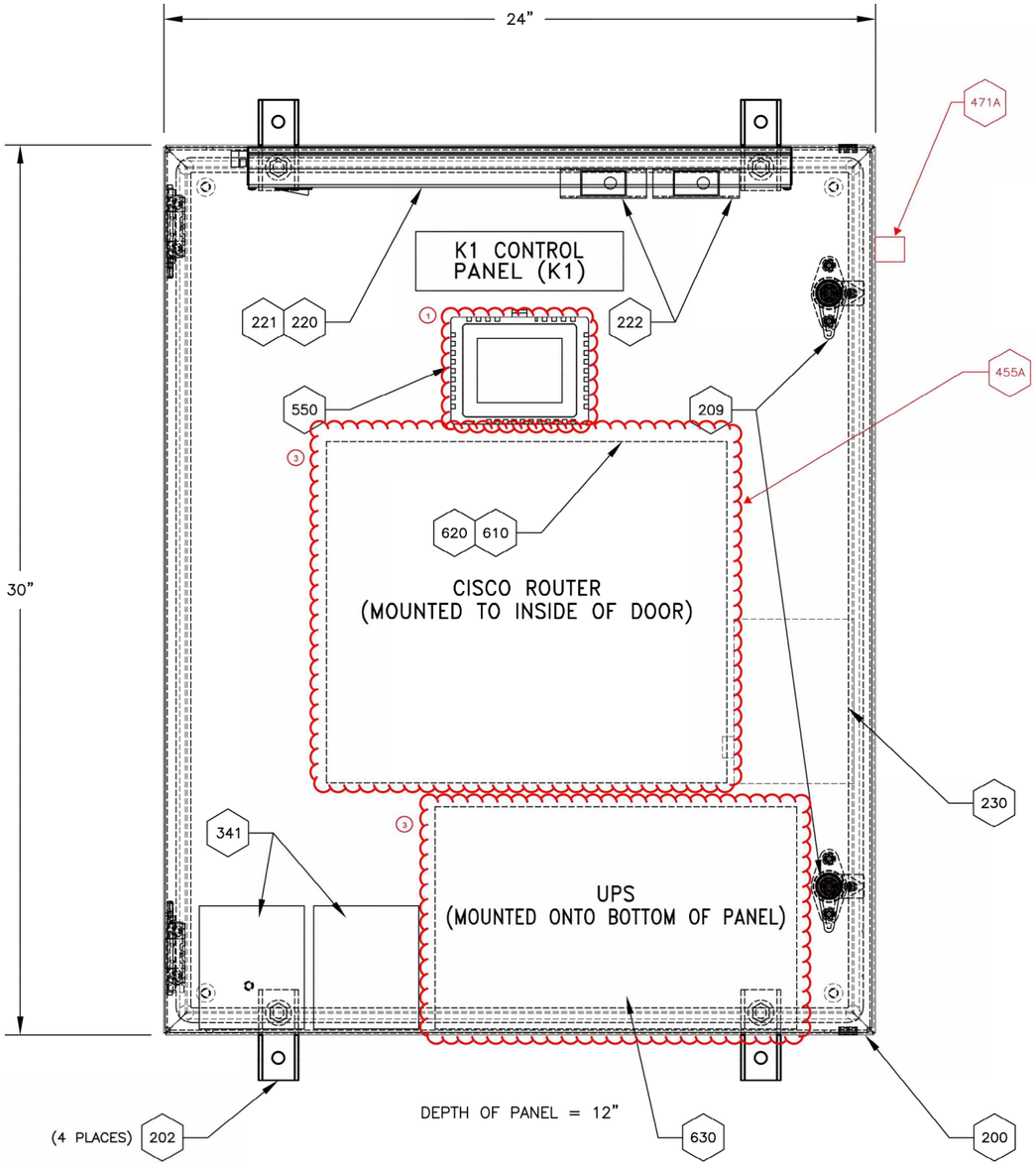

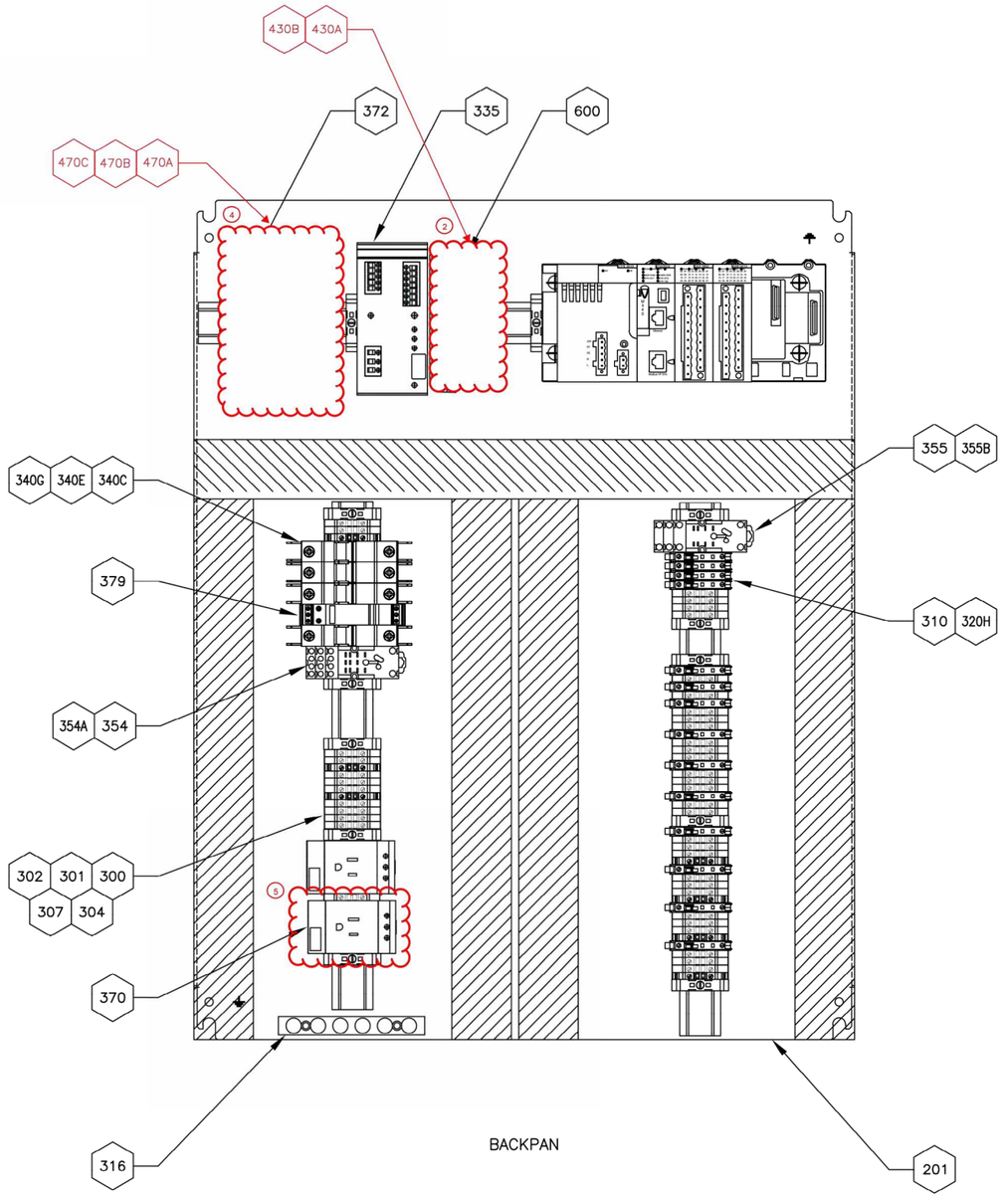

NOTES:
1. REMOVE EXISTING OIT AND REPLACE WITH NEW MAPLE SYSTEMS OIT (PART#cMT3092Xv2)
2. REMOVE EXISTING ETHERNET SWITCH AND REPLACE WITH NEW CISCO SWITCH (PART# IE-3100-8T2C-E)
3. REMOVE AND RETURN TO CITY AS NO LONGER NEEDED.
4. REMOVE OUTLET AND MOUNT NEW PEPLINK RADIO
5. REPURPOSE OUTLET AND REWIRE AS NEW "PROGRAMMING OUTLET"

XXX BOM ITEM NUMBER

811 Know what's below. Call 811 before you dig.

DATE	NO.	REVISION	BY
X/X/X	0	BID SET	

APPROVED BY:

Rob English, PE

DATE: 3/3/2026

Ben Mahony (DESIGNED BY)	2/26/2026 (DATE)
Ben Mahony (DRAWN BY)	2/26/2026 (DATE)
I-Wen Yang, PE (REVIEWED BY)	2/26/2026 (DATE)

CITY OF KIRKLAND WASHINGTON

CITY OF KIRKLAND
DEPARTMENT OF PUBLIC WORKS
123 FIFTH AVENUE KIRKLAND, WA 98033
(425) 587-3800 www.kirklandwa.gov

PANEL LAYOUT

SCADA REPLACEMENT

K1 CONTROL PANEL (PROPOSED)

REFERENCE SHEET NO. K1-J01

SHEET 167 of 366

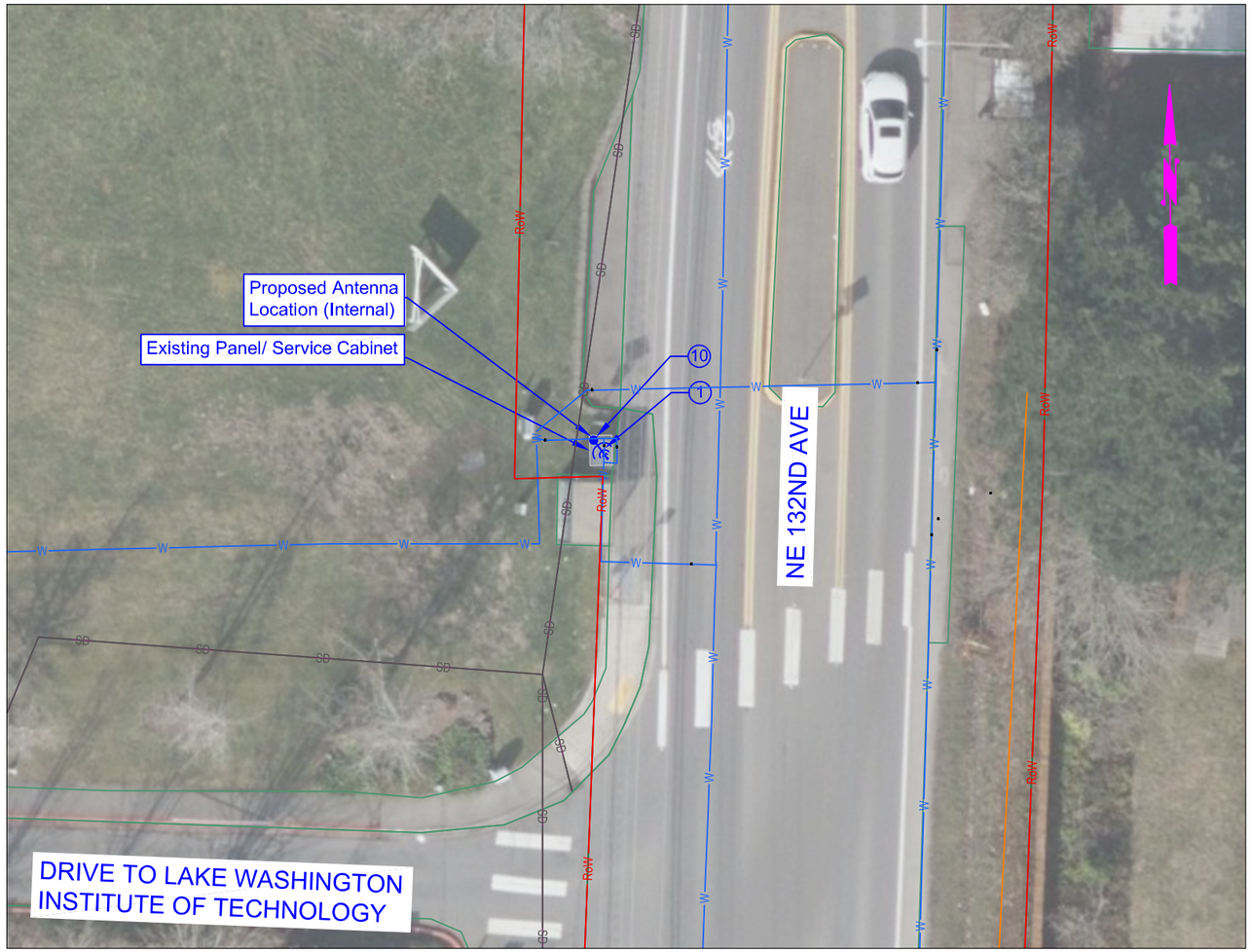

SITE: S3
UTILITY: Water
PROJECT ADDRESS: 11615 132nd Ave, Kirkland WA 98034

GIS DISCLAIMER:
The as-built and utility information shown in the project plans are based on the City of Kirkland's available GIS information. Thus, the contractor shall field verify all of the proposed conditions and limits. Additionally, the contractor shall call for utility locates at least 48 hours prior to any trenching or excavation work to field verify that no utility conflicts exist with the proposed excavation limits.

20 10 0 20 40

A SOUTH-EAST VIEW
NOT TO SCALE

B SOUTH-EAST VIEW
NOT TO SCALE

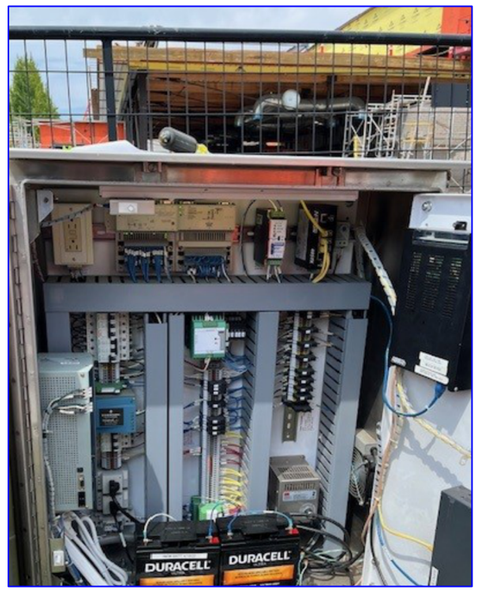

CONSTRUCTION NOTES:

1. TO REPLACE PANEL AND UPDATE THE SOFTWARE IN THE SERVICE CABINET PER THE SITE-SPECIFIC BILL OF MATERIALS (BOM'S).
2. TO INSTALL 4-INCH SCH. 40 CONDUIT PIPING AND REPLACE BACKFILL WITH NATIVE SOILS, IN KIND.
3. TO PROTECT EXISTING BURIED UTILITY, SEE GENERAL NOTE 1.
4. TO PROTECT EXISTING BURIED POWER AND/ OR FRANCHISE UTILITY, SEE GENERAL NOTE 1.
5. TO INSTALL FIBER CABLE THROUGH EXISTING FIBER CONDUIT.
6. TO REMOVE AND REPLACE CONCRETE SIDEWALK.
7. TO CORE-DRILL HOLE(S) INTO EXISTING STRUCTURE AND/ OR EXISTING SERVICE CABINET.
8. TO INSTALL EXTERNAL MOUNTED LOW-PROFILE (4 FT HIGH POLE HEIGHT) ANTENNA PER ANTENNA STANDARD DETAIL.
9. TO INSTALL EXTERNAL MOUNTED HIGH-PROFILE (20 FT HIGH POLE HEIGHT) ANTENNA PER ANTENNA STANDARD DETAIL.
10. TO INSTALL INTERNAL PANEL-MOUNTED LOW-PROFILE (2 FT HIGH POLE HEIGHT) ANTENNA PER ANTENNA STANDARD DETAIL.
11. TO INSTALL FULL-PROFILE (20 FT HIGH POLE HEIGHT) ANTENNA WITH A CONCRETE ANCHOR PER ANTENNA AND ANTENNA BASE STANDARD DETAIL.
12. TO SALVAGE AND REUSE EXISTING ANTENNA STRUCTURE AND INSTALL PROPOSED ANTENNA EQUIPMENT.
13. TO REMOVE EXISTING YAGI ANTENNA ON THE EXISTING ANTENNA POLE STRUCTURE.
14. TO INSTALL NEMA 4X ENCLOSURE ON PROPOSED OR EXISTING ANTENNA POLE STRUCTURE WITH THE NEW MODEM INSIDE THE ENCLOSURE.
15. TO INSTALL FIBER CONNECTION IN EXISTING FIBER CONDUIT.
16. TO INSTALL FIBER CONNECTION IN EXISTING SIGNAL CABINET/ JUNCTION BOX.

GENERAL NOTES:

1. UTILITY LOCATIONS SHOWN ARE APPROXIMATE AND BASED ON AVAILABLE GIS, FIELD OBSERVATIONS, AND UTILITY LOCATES. CONTRACTOR SHALL VERIFY PRIOR TO CONSTRUCTION.
2. SEWER STRUCTURE DATA AND LOCATIONS SHOWN ARE APPROXIMATE BASED ON AVAILABLE CITY GIS AND AS-BUILT RECORDS. THE CONTRACTOR SHALL CONDUCT PIPE AND SITE VERIFICATION PRIOR TO PROCEEDING WITH CONSTRUCTION.
3. CITY SHALL COORDINATE AND SECURE ANY NECESSARY AGREEMENTS AND/ OR EASEMENT WITH PROPERTY PRIOR TO ANY WORK ON PRIVATE PROPERTY. NO WORK SHALL BE PERFORMED OUTSIDE OF THE RIGHT-OF-WAY WITHOUT PRIOR AUTHORIZATION BY THE ENGINEER.
4. IF DISTURBED, HMA PAVEMENT SECTION SHALL BE REPLACED PER PRE-APPROVED PLAN NO. CK-R.12.

LEGEND:

- PROPOSED CONDUIT INSTALLATION
- PROPOSED FIBER INSTALLATION
- PROPOSED ANTENNA & BASE LOCATION
- PROPOSED REMOVAL/ REPLACEMENT OF SIDEWALK
- EXISTING STRUCTURE
- EXISTING STRUCTURE (HIDDEN)
- SS — EXISTING SANITARY SEWER UTILITY
- EXISTING SANITARY SEWER MANHOLE
- SD — EXISTING STORM DRAIN PIPE
- EXISTING EXISTING STORM DRAIN CATCH BASIN
- W — EXISTING EXISTING WATER PIPE UTILITY
- EXISTING EXISTING WATER METER UTILITY
- EXISTING WATER HYDRANT
- EXISTING WATER VALVE UTILITY
- RoW — EXISTING RIGHT-OF-WAY LINE
- PL — EXISTING EXISTING PROPERTY LINE
- GAS — EXISTING GAS UTILITY
- EXISTING GAS METER UTILITY
- X — SITE IMAGE REF. SEE NOTE X

811 Know what's below. Call 811 before you dig.

DATE	NO.	REVISION	BY
X/X/X	0	BID SET	

APPROVED BY:

Rob English, PE

DATE: 3/3/2026

Ben Mahony (DESIGNED BY)	2/26/2026 (DATE)
Ben Mahony (DRAWN BY)	2/26/2026 (DATE)
I-Wen Yang, PE (REVIEWED BY)	2/26/2026 (DATE)

CITY OF KIRKLAND
DEPARTMENT OF PUBLIC WORKS
123 FIFTH AVENUE KIRKLAND, WA 98033
(425) 587-3800 www.kirklandwa.gov

SCADA REPLACEMENT

S3 SITE IMPROVEMENTS

REFERENCE SHEET NO. S3_IMP_01

SUPPLY STATION 3					
PartID	Qty	Specification	Manufacturer Part Number	Description	Manufacturer
118K	1	No Equal	A36P30	Enclosure Backpan, Painted Mild Steel, 33.00" x 27.00"	Hoffman
143B	1	Or Approved Equal	111019-00	Temperature Control Switch, N.O. Contact for fan control or high temperature alarm, Adjustable Set Point Range 32-140 deg.F, 15-amp rated contact at 120VAC	Stego
150B	1	Or Approved Equal	DAH2001A	Enclosure Heater, 200 W, 120 VAC/1.7 A, Forced Air with Thermostat	Hoffman
200B	ASRQ	Or Approved Equal	3044102	Terminal Block, UT4, Gray, 26-10 AWG, 600V, 32A	Phoenix Contact
200E	ASRQ	Or Approved Equal	3046139	Knife-disconnect terminal block, nom. voltage: 500 V, nominal current: 20 A, connection method: Screw connection, Rated cross section: 4 mm2, cross section: 0.14 mm2 - 6 mm2, mounting: NS 35/7,5, NS 35/15, color: gray	Phoenix Contact
202A	ASRQ	Or Approved Equal	3047028	Terminal Block End Barrier, UT2.5/10 Terminals	Phoenix Contact
203A	ASRQ	Or Approved Equal	0800886	Terminal Block End Clamp, 9.5mm Wide	Phoenix Contact
210A	ASRQ	Or Approved Equal	1492-WFB424	Fuse Terminal Block, 5x20mm Fuse, Black, Red LED Indicator, 30-12 AWG, 15A @ 10-57VAC/VDC	Allen-Bradley
221A	ASRQ	Or Approved Equal	S500-250-R	Fuse, 0.25 A, Glass Body, 5x20mm, Fast Acting, 250VAC/60VDC	Bussmann
221B	ASRQ	Or Approved Equal	S500-500-R	Fuse, 0.5 A, Glass Body, 5x20mm, Fast Acting, 250VAC/60VDC	Bussmann
221D	ASRQ	Or Approved Equal	S500-2-R	Fuse, 2 A, Glass Body, 5x20mm, Fast Acting, 250VAC/60VDC	Bussmann
241C	ASRQ	Or Approved Equal	1489-M1C050	Miniature Circuit Breaker, 1-Pole, 5A, Din Rail Mount, 277VAC/48VDC Max, Trip Curve C, 10kA, UL 489 Listed	Allen-Bradley
241E	ASRQ	Or Approved Equal	1489-M1C100	Miniature Circuit Breaker, 1-Pole, 10A, Din Rail Mount, 277VAC/48VDC Max, Trip Curve C, 10kA, UL 489 Listed	Allen-Bradley
241G	ASRQ	Or Approved Equal	1489-M1C150	Miniature Circuit Breaker, 1-Pole, 15A, Din Rail Mount, 277VAC/48VDC Max, Trip Curve C, 10kA, UL 489 Listed	Allen-Bradley
241H	ASRQ	Or Approved Equal	1489-M1C200	Miniature Circuit Breaker, 1-Pole, 20A, Din Rail Mount, 277VAC/48VDC Max, Trip Curve C, 10kA, UL 489 Listed	Allen-Bradley
241K	ASRQ	Or Approved Equal	1489-M1C300	Miniature Circuit Breaker, 1-Pole, 30A, Din Rail Mount, 277VAC/48VDC Max, Trip Curve C, 10kA, UL 489 Listed	Allen-Bradley
245A	1	Or Approved Equal	2907918	Surge Arrester, Pluggable Type, 150VAC/DC, 26A (20A for UL Applications)	Phoenix Contact
260A	1	Or Approved Equal	UGB2/0-414-6	Ground Bus Bar, Tin Plated Copper, 5" x 5/8", 14 - 4 AWG, 6-port	Panduit
290A	1	Or Approved Equal	2907161	UPS with integrated power supply, USB (Modbus/RTU), DIN rail mounting, Push-in connection, input: 1-phase, output: 24 V DC / 10 A	Phoenix Contact
290B	1	Or Approved Equal	1348516	Energy storage, VRLA-AGM, 24 V DC, 20 Ah, automatic detection and communication with QUINT UPS-IQ	Phoenix Contact
307B	ASRQ	Or Approved Equal	700-HK32Z24-4	Slim Line Control Relay, DPDT, 8A Contacts, 24 VDC Coil, Pilot Light	Allen-Bradley
307C	ASRQ	Or Approved Equal	700-HK32A1-4	Slim Line Control Relay, DPDT, 8A Contacts, 120 VAC Coil, Pilot Light	Allen-Bradley
307D	ASRQ	Or Approved Equal	700-HN122	Slim Line Control Relay Base, Mini 8-Blade Base Socket, Screw Terminals	Allen-Bradley
320A	1	Or Approved Equal	0804155	Receptacle, 15A/125VAC, DIN rail mounting, simplex	Phoenix Contact
322B	1	Or Approved Equal	1263628	Receptacle, GFCI, 15A/125VAC, DIN rail mounting, duplex, Slim Frame	Phoenix Contact
430A	1	No Equal	IE-3100-8T2C-E	Cisco Catalyst IE3100 Rugged Series - Switch - 8 x 10/100/1000 + 2 x combo Gigabit - DIN rail mountable - PACL, VACL	Cisco
430B	1	No Equal	SD-IE-1GB	Cisco - Flash memory card - 1 GB - SD	Cisco
455A	1	No Equal	cMT3092Xv2	Smart HMI, 9.7", Resolution 1024 x 768, Dark Grey Bezel, 1.6 GHz CPU, 4 GB Flash Memory, 1 GB DRAM, UL Listed, Ethernet, 24VDC	Maple Systems
470A	1	No Equal	MAX-BR1-MINI-LTE-US-T-M-PRM	Peplink MAX BR1 Mini Core LTE - US - No WiFi - No GPS - AC Adapter & 2x SMA Cellular Anetenna Connectors	Peplink
470B	1	No Equal		DC Power Cable ES/GX/MP/RV/LX/IBR	Peplink
470C	1	No Equal	ACW-DIN-BR1-MINI	DIN Rail mount kit	Peplink
471A	2	Or Approved Equal	POLTSX-NFF	Cell Surge Arrestor 0.698-2.7GHz DC Block Coax Protect, N-Female/N-Female connector	PolyPhaser
471B	ASRQ	Or Approved Equal	TIMLMR-400-DB	Watertight LMR400 Cable Black PE Jacket	Times Microwave
471C	ASRQ	Or Approved Equal	R/FCOMP-NM-400	Conn, N-Male Compression Style for Plenum LMR400 Cable	RF Industries
471D	2	Or Approved Equal	ANXTRA6927M3PB-001	3G/4G Multi-Band Phantom Antenna for 698-960/1700-2700 MHz. Black. 3.3" Radome. N Female.	Laird
471E	2	Or Approved Equal	CUSTOM BRACKET	Stainless Steel Custom Bracket - 14"x 02"	Custom
610D	1	No Equal	BMXP342020	Modicon M340 PLC Processor, 1 Modbus Serial Port, 1 Ethernet Port, Max 1024 Discrete & 256 Analog IO	Schneider Electric
611A	1	No Equal	BMXXBP0400	Modicon X80 I/O Platform X-Bus Rack, 4 Slots	Schneider Electric
612A	1	No Equal	BMXCPS2010	Modicon X80 I/O Platform Power Supply, 17W Output, 24 VDC	Schneider Electric
614B	1	No Equal	BMXDDI1602	Modicon X80 Discrete Input Card, 16 Points, 24 VDC	Schneider Electric
615D	1	No Equal	BMXDRA0815	Modicon X80 Relay Output Card, 8 Points, 24 VDC / 24-240 VAC, 2A Max	Schneider Electric
616C	1	No Equal	BMXAMI0810	Modicon X80 Analog Input Module, 8 Points, Voltage/Current, Isolated	Schneider Electric
619C	2	No Equal	BMXFTB2010	Modicon X80 Removable Terminal Block, 20-Way, Screw Terminals	Schneider Electric
619E	1	No Equal	BMXFTB2800	Modicon X80 Removable Terminal Block, 28-Way, Screw Terminals	Schneider Electric

811 Know what's below. Call 811 before you dig.

DATE	NO.	REVISION	BY
X/X/X	0	BID SET	

APPROVED BY:

Rob English, PE

DATE: 3/3/2026

Ben Mahony	2/26/2026	DESIGNED BY / DATE
Ben Mahony	2/26/2026	DRAWN BY / DATE
I-Wen Yang, PE	2/26/2026	REVIEWED BY / DATE

CITY OF KIRKLAND WASHINGTON

CITY OF KIRKLAND
DEPARTMENT OF PUBLIC WORKS
123 FIFTH AVENUE KIRKLAND, WA 98033
(425) 587–3800 www.kirklandwa.gov

SCADA REPLACEMENT

S3 - BILL OF MATERIALS

REFERENCE SHEET NO.
S3_BM_01

		PANEL NAME:	SUPPLY STATION 3														
		PANEL NUMBER:	S3														
TAG Prefix	Loop Desc. 1	Loop Desc. 2	LOOP #	PLC/HMI Tag	DESCRIPTION 1	DESCRIPTION 2	DESCRIPTION 3	FUNCTION	TYPE	Rack	Slot	Point	Units	Min	Max	P&ID Dwg	NOTES
			-		545 ZONE	FLOW METER		TOTALIZER	DI	1	1	0					
			-		545 ZONE	VALVE		CLOSED	DI	1	1	1					
			-		Spare				DI	1	1	2					
			-		Spare				DI	1	1	3					
			-		Spare				DI	1	1	4					
			-		Spare				DI	1	1	5					
			-		Spare				DI	1	1	6					
			-		INTRUSION			ALARM	DI	1	1	7					
			-		DRY WELL	FLOOD SWITCH		ALARM	DI	1	1	8					
			-		PANIC			ALARM	DI	1	1	9					
			-		Spare				DI	1	1	10					
			-		Spare				DI	1	1	11					
			-		120VAC CONTROL POWER			FAIL	DI	1	1	12					
			-		24VDC CONTROL POWER			FAIL	DI	1	1	13					
			-		DC UPS			ON BATTERY	DI	1	1	14					
			-		DC UPS			ALARM	DI	1	1	15					
			-		545 ZONE HYDRAULIC	CONTROL VALVE No.1	SOLENOID	OPEN COMMAND	DO	1	2	0					
			-		545 ZONE HYDRAULIC	CONTROL VALVE No.1	SOLENOID	CLOSE COMMAND	DO	1	2	1					
			-		545 ZONE HYDRAULIC	CONTROL VALVE No.1	SOLENOID PRESSURE REDUCING	CALL COMMAND	DO	1	2	2					
			-		Spare				DO	1	2	3					
			-		Spare				DO	1	2	4					
			-		Spare				DO	1	2	5					
			-		Spare				DO	1	2	6					
			-		Spare				DO	1	2	7					
			-		SEATTLE	PRESSURE TRANSMITTER	(EXISTING)	PRESSURE	AI	1	3	0	PSI	0	400		
			-		545 ZONE	PRESSURE TRANSMITTER	(EXISTING)	PRESSURE	AI	1	3	1	PSI	0	XXX		
			-		SEATTLE	WATER FLOWMETER	(EXISTING)	FLOW	AI	1	3	2	GPM	0	XXX		
			-		Spare				AI	1	3	3					
			-		Spare				AI	1	3	4					
			-		Spare				AI	1	3	5					
			-		Spare				AI	1	3	6					
			-		Spare				AI	1	3	7					

Know what's below. Call 811 before you dig.

DATE	NO.	REVISION	BY
X/X/X	0	BID SET	

APPROVED BY:

Rob English, PE

DATE: 3/3/2026

Ben Mahony	2/26/2026
DESIGNED BY	DATE
Ben Mahony	2/26/2026
DRAWN BY	DATE
I-Wen Yang, PE	2/26/2026
REVIEWED BY	DATE

CITY OF KIRKLAND

DEPARTMENT OF PUBLIC WORKS
123 FIFTH AVENUE KIRKLAND, WA 98033
(425) 587–3800 www.kirklandwa.gov

SCADA REPLACEMENT

S3 - I/O LIST

REFERENCE SHEET NO. S3_IO_01

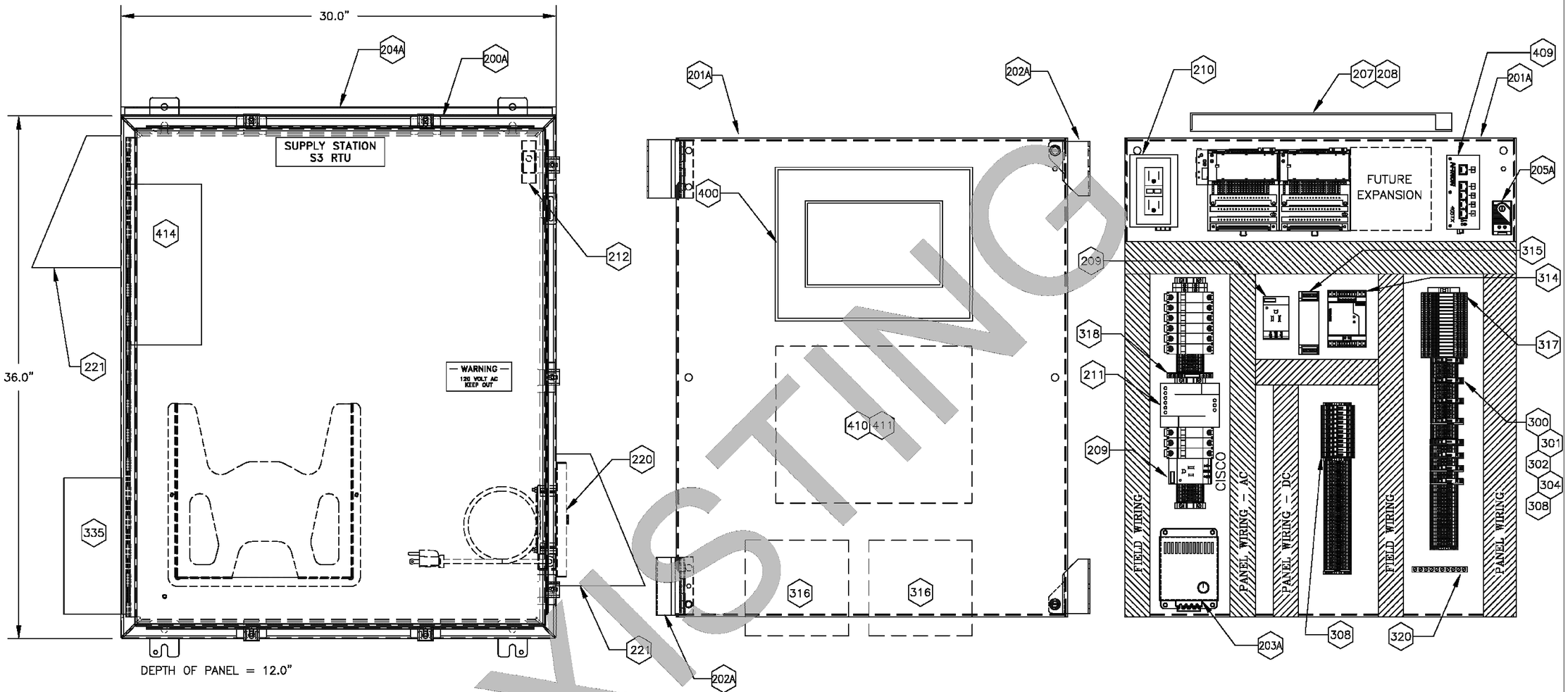

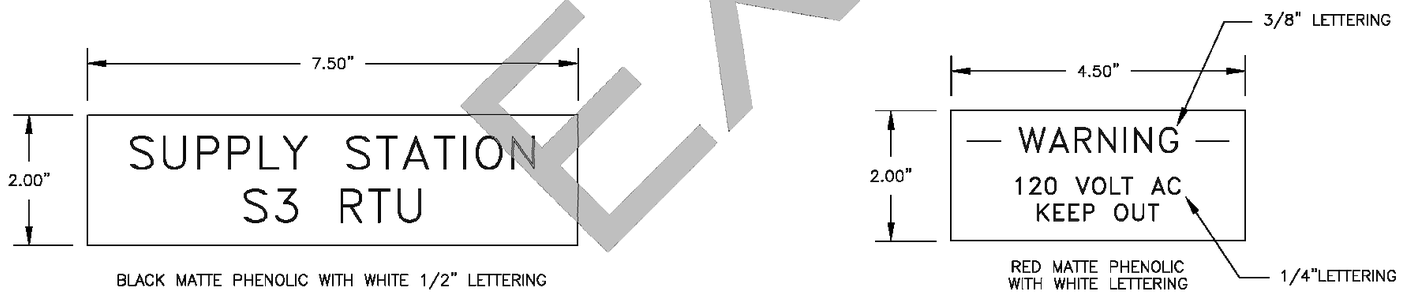

EXISTING

Know what's below. Call 811 before you dig.

DATE	NO.	REVISION	BY
X/X/X	0	BID SET	

APPROVED BY:

Rob English, PE

DATE: 3/3/2026

Ben Mahony	DESIGNED BY	2/26/2026 DATE
Ben Mahony	DRAWN BY	2/26/2026 DATE
I-Wen Yang, PE	REVIEWED BY	2/26/2026 DATE

CITY OF KIRKLAND WASHINGTON

CITY OF KIRKLAND
DEPARTMENT OF PUBLIC WORKS
123 FIFTH AVENUE KIRKLAND, WA 98033
(425) 587-3800 www.kirklandwa.gov

TELEMETRY PANEL, PANEL LAYOUT

SCADA REPLACEMENT

SUPPLY STATION 3 EXISTING CONTROL PANEL (REFERENCE)

REFERENCE SHEET NO.
SS3-J01

SHEET 171 of 366

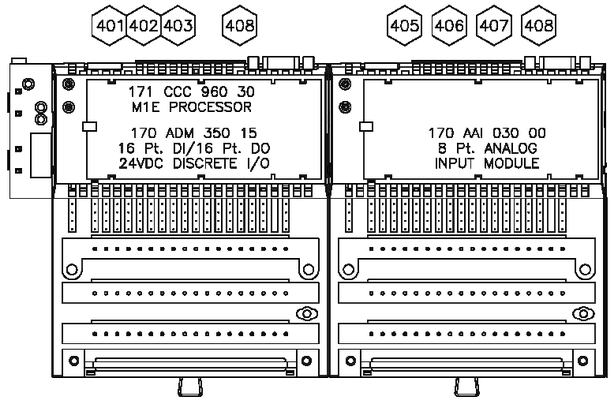

CIRCUIT BREAKERS

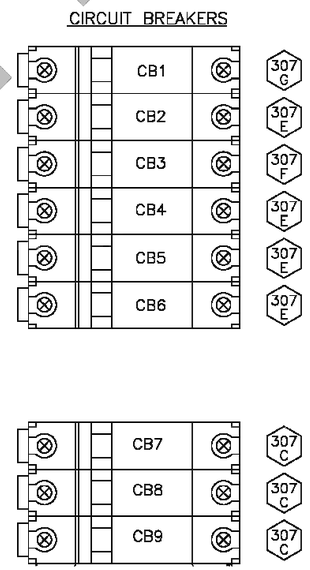

EXISTING

Know what's below. Call 811 before you dig.

DATE	NO.	REVISION	BY
X/X/X	0	BID SET	

APPROVED BY:

Rob English, PE

DATE: 3/3/2026

Ben Mahony 2/26/2026
DESIGNED BY DATE

Ben Mahony 2/26/2026
DRAWN BY DATE

I-Wen Yang, PE 2/26/2026
REVIEWED BY DATE

CITY OF KIRKLAND WASHINGTON

CITY OF KIRKLAND
DEPARTMENT OF PUBLIC WORKS
123 FIFTH AVENUE KIRKLAND, WA 98033
(425) 587-3800 www.kirklandwa.gov

TELEMETRY PANEL, PLC ND CIRCUIT BREAKER BOM ITEM NUMBERS
SCADA REPLACEMENT

SUPPLY STATION 3 EXISTING CONTROL PANEL (REFERENCE)

REFERENCE SHEET NO.
SS3-J02

SHEET 172 of 366

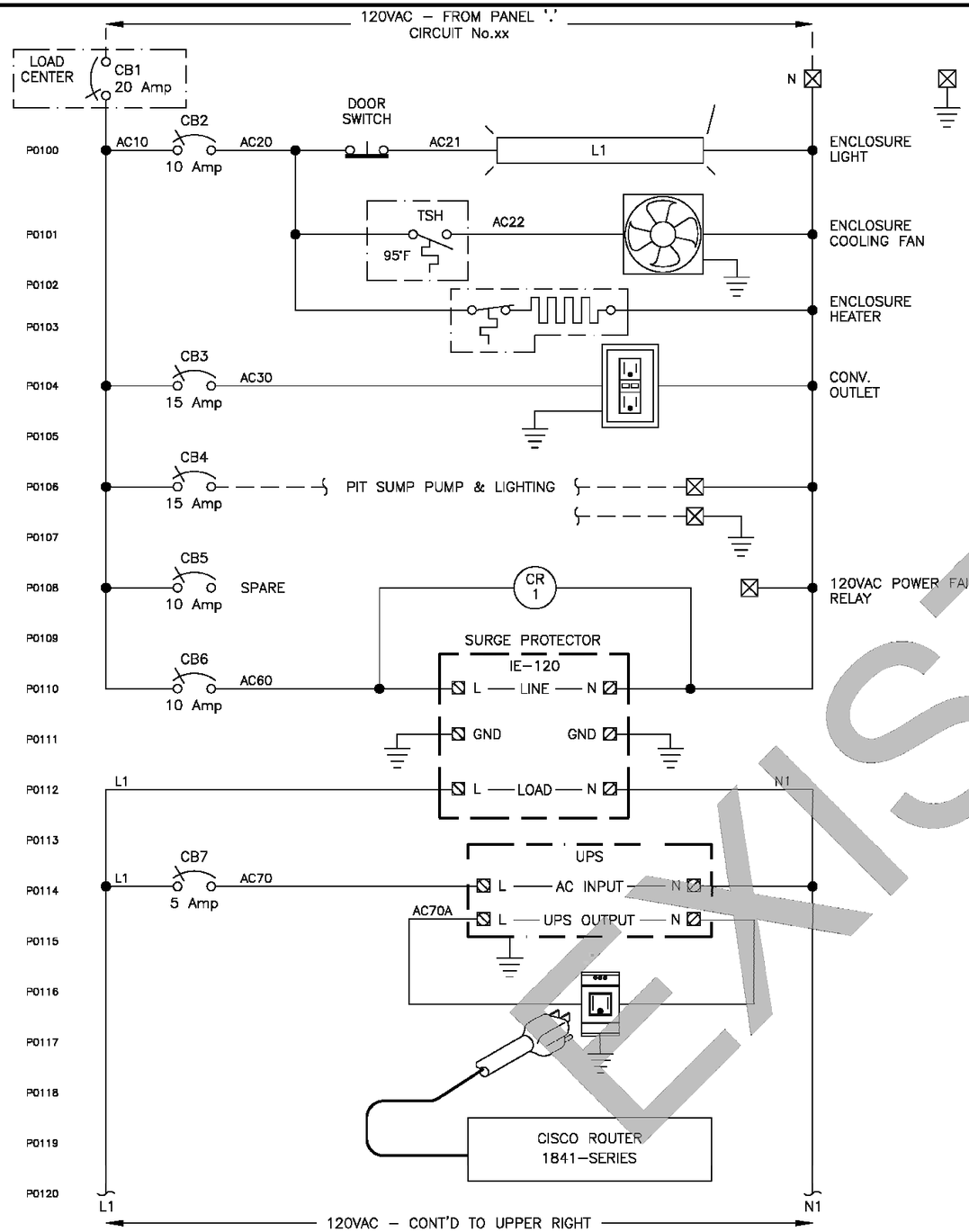

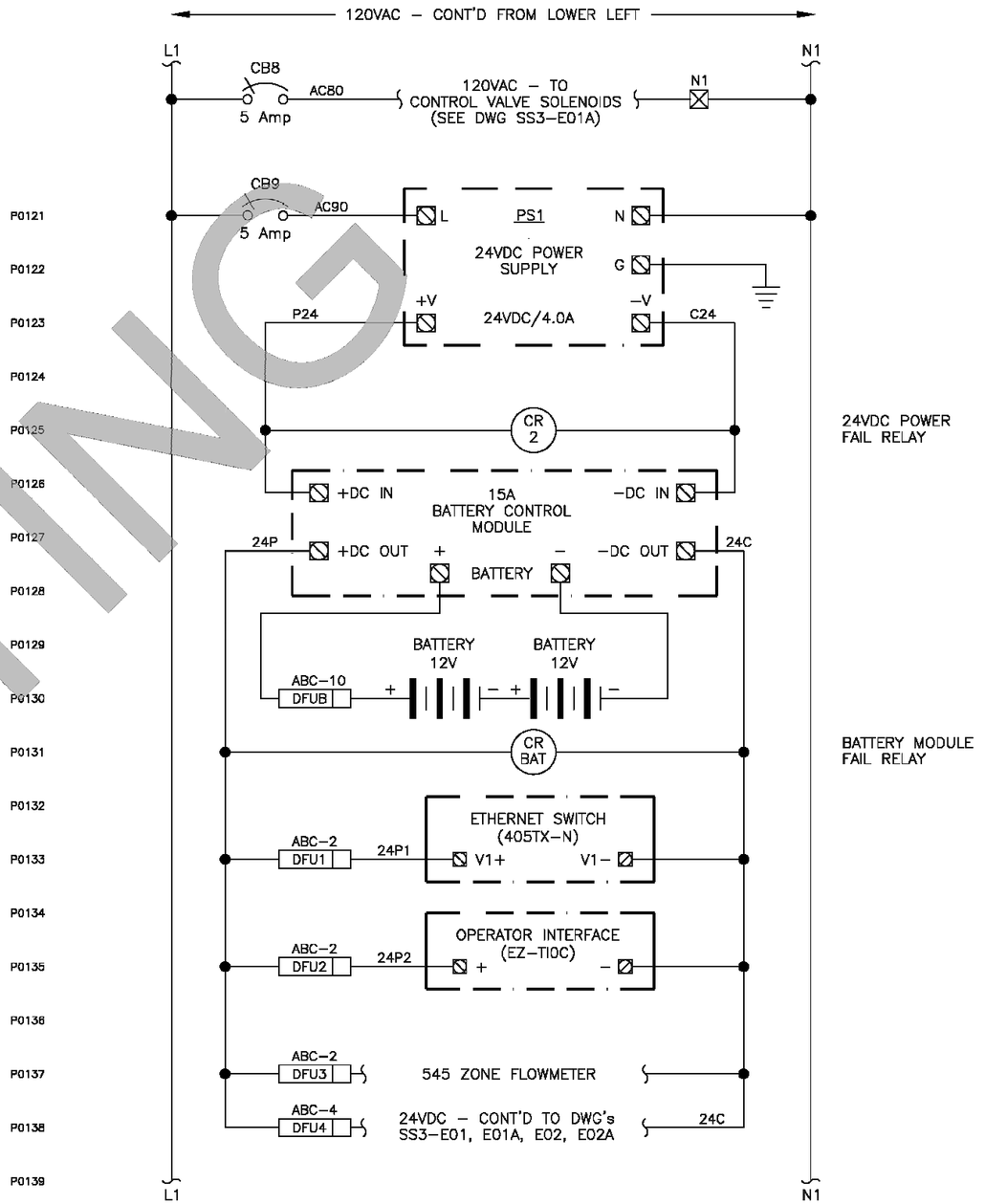

EXISTING

Know what's below. Call 811 before you dig.

DATE	NO.	REVISION	BY
X/X/X	0	BID SET	

APPROVED BY:

Rob English, PE

DATE: 3/3/2026

Ben Mahony	DESIGNED BY	2/26/2026 DATE
Ben Mahony	DRAWN BY	2/26/2026 DATE
I-Wen Yang, PE	REVIEWED BY	2/26/2026 DATE

CITY OF KIRKLAND WASHINGTON

CITY OF KIRKLAND
DEPARTMENT OF PUBLIC WORKS
123 FIFTH AVENUE KIRKLAND, WA 98033
(425) 587–3800 www.kirklandwa.gov

TELEMETRY PANEL, POWER WIRING DIAGRAM

SCADA REPLACEMENT

SUPPLY STATION 3 EXISTING CONTROL PANEL (REFERENCE)

REFERENCE SHEET NO. SS3-P01

SHEET 173 of 366

FIELD	TELEMETRY PANEL

E0100
E0101
E0102
E0103
E0104
E0105
E0106
E0107
E0108
E0109
E0110
E0111
E0112
E0113
E0114
E0115
E0116
E0117
E0118
E0119
E0120
E0121
E0122

24VDC – CONT'D FROM DWG SS3–P02 (LINE P0138)

16 Pt. INPUT / 16 Pt. OUTPUT 24VDC MODULE 170 ADM 350 10

I/O MODULE 1

ROW 1	ROW 2	ROW 3		
18 L+			ABC–1/2A DFU5	24P4
17 M–				
	17 1L+	17 M–	ABC–4A DFU6	24P5
	18 2L+	18 M–	ABC–4A DFU7	24P6
1	I:00016		CR–1	116
2	I:00015		CR–2	115
3	I:00014		114	
4	I:00013		CR–BAT	113
5	I:00012		112	
6	I:00011		111	
7	I:00010		110	
8	I:00009		ABC–1/4 FU109	109
9	I:00008			108
10	I:00007			107
11	I:00006			106
12	I:00005			105
13	I:00004		ABC–1/4 FU104	104
14	I:00003		ABC–1/4 FU103	103
15	I:00002		ABC–1/4 FU102	102
16	I:00001		ABC–1/4 FU109	101

POWER FAIL 120VAC	
POWER FAIL 24VDC	
SPARE	
BATTERY MODULE FAIL	
SPARE	
SPARE	
SPARE	
INTRUSION	
SPARE	
SPARE	
SPARE	
SPARE	
FLOOD SWITCH	
PANIC ALARM	
545 ZONE FLOW TOTALIZER	
545 ZONE VALVE POSITION	

(E) INTRUSION (EXISTING) — PANEL INTRUSION SW

DRY WELL FLOOD SWITCH (E)

PANIC ALARM (E)

ZONE 545 VALVE CLOSED

24P4 24C

NOTE: FIELD TERMINATIONS WILL BE ADDED ON AS–BUILT DRAWINGS.

EXISTING

Know what's below. Call 811 before you dig.

DATE	NO.	REVISION	BY
X/X/X	0	BID SET	

APPROVED BY:

Rob English, PE

DATE: 3/3/2026

Ben Mahony	DESIGNED BY	2/26/2026 DATE
Ben Mahony	DRAWN BY	2/26/2026 DATE
I-Wen Yang, PE	REVIEWED BY	2/26/2026 DATE

CITY OF KIRKLAND WASHINGTON

CITY OF KIRKLAND
DEPARTMENT OF PUBLIC WORKS
123 FIFTH AVENUE KIRKLAND, WA 98033
(425) 587–3800 www.kirklandwa.gov

TELEMETRY PANEL - I/O MODULE 1 (INPUTS), CONTROL WIRING DIGRAM
SCADA REPLACEMENT
SUPPLY STATION 3 EXISTING CONTROL PANEL (REFERENCE)

REFERENCE SHEET NO.
SS3-E01

SHEET 174 of 366

FIELD

E0200
E0201
E0202
E0203
E0204
E0205
E0206
E0207
E0208
E0209
E0210
E0211
E0212
E0213
E0214
E0215
E0216
E0217
E0218
E0219
E0220
E0221
E0222

545 ZONE
HYDRAULIC CONTROL
VALVE No.1

OPEN
SV1-1

CLOSE
SV1-2

PRV
SV1-3

NOTE: FIELD TERMINATIONS WILL BE ADDED ON AS-BUILT DRAWINGS.

TELEMETRY PANEL

120VAC - CONT'D FROM DWG SS3-P01 (LINE P0118)
AC80 N1

24VDC - CONT'D FROM DWG SS3-P01 (LINE P0138)
24P4 24C

16 Pt. INPUT / 16 Pt. OUTPUT
24VDC MODULE
170 ADM 350 10

I/O MODULE 1

	ROW 1	ROW 2	ROW 3	
CR 3	016	1	0:00016	SPARE
CR 4	015	2	0:00015	SPARE
CR 5	014	3	0:00014	SPARE
CR 6	013	4	0:00013	545 ZONE HYDRAULIC CONTROL VALVE No.1 SOLENOID OPEN CALL
CR 7	012	5	0:00012	545 ZONE HYDRAULIC CONTROL VALVE No.1 SOLENOID CLOSE CALL
CR 8	011	6	0:00011	545 ZONE HYDRAULIC CONTROL VALVE No.1 SOLENOID PRESSURE REDUCING CALL
CR 9	010	7	0:00010	SPARE
CR 10	009	8	0:00009	SPARE
CR 11	008	9	0:00008	SPARE
CR 12	007	10	0:00007	SPARE
CR 13	006	11	0:00006	SPARE
CR 14	005	12	0:00005	SPARE
CR 15	004	13	0:00004	SPARE
CR 16	003	14	0:00003	SPARE
CR 17	002	15	0:00002	SPARE
CR 18	001	16	0:00001	SPARE

CR03A / CR03B — CR-03
CR04A / CR04B — CR-04
CR05A / CR05B — CR-05
CR06A — CR-06
CR07A — CR-07
CR08A — CR-08
N1
CR09B — CR-09
N1
CR10B — CR-10
N1
CR11B — CR-11
N1
CR12A / CR12B — CR-12
CR13A / CR13B — CR-13
CR14A / CR14B — CR-14
CR15A / CR15B — CR-15
CR16A / CR16B — CR-16
CR17A / CR17B — CR-17
CR18A / CR18B — CR-18

EXISTING

Know what's below. Call 811 before you dig.

DATE	NO.	REVISION	BY
X/X/X	0	BID SET	

APPROVED BY:
Rob English, PE
DATE: 3/3/2026

Ben Mahony 2/26/2026 DESIGNED BY DATE
Ben Mahony 2/26/2026 DRAWN BY DATE
I-Wen Yang, PE 2/26/2026 REVIEWED BY DATE

CITY OF KIRKLAND
DEPARTMENT OF PUBLIC WORKS
123 FIFTH AVENUE KIRKLAND, WA 98033
(425) 587-3800 www.kirklandwa.gov

TELEMETRY PANEL - I/O MODULE 1 (OUTPUTS), CONTROL WIRING DIGRAM
SCADA REPLACEMENT
SUPPLY STATION 3 EXISTING CONTROL PANEL (REFERENCE)

REFERENCE SHEET NO. SS3-EO1A

SHEET 175 of 366

PUMP CONTROL PANEL

TELEMETRY PANEL

E0400
E0401
E0402
E0403
E0404
E0405
E0406
E0407
E0408
E0409
E0410
E0411
E0412
E0413
E0414
E0415
E0416
E0417
E0418
E0419
E0420
E0421
E0422

SEATTLE
PRESSURE TRANSMITTER
(EXISTING)
(0–400 PSI)

SEATTLE
FLOWMETER
(0–XXX GPM)

ZONE 545
PRESSURE TRANSMITTER
(EXISTING)
(0–XXX PSI)

24VDC – CONT'D
FROM DWG SS3–P01
(LINE P0138)

24P4 24C

ABC–1/2A
DFU10

8 Pt. ANALOG INPUT
MODULE BASE
170 AAI 030 00

MODULE 3
ROW 3 ROW 2

18 L+
17 M–

ABC–1/4
FU301
301+
301–
24C
SHLD
4–20 mA

2 InI1
1 Agnd1
2 InI1
1 InU1
IN 1 300001

ABC–1/4
FU302
302+
302–
24C
SHLD
4–20 mA

4 InI2
3 Agnd2
4 InI2
3 InU2
IN 2 300002

ABC–1/4
FU303
303+
303–
24C
SHLD
4–20 mA

6 InI3
5 Agnd3
6 InI3
5 InU3
IN 3 300003

ABC–1/4
FU304
304+
304–
24C
SHLD
4–20 mA

8 InI4
7 Agnd4
8 InI4
7 InU4
IN 4 300004

CONT'D TO DWG SS3–E02A

24P 24C

NOTE: FIELD TERMINATIONS WILL BE ADDED
ON AS–BUILT DRAWINGS.

EXISTING

Know what's below. Call 811 before you dig.

DATE	NO.	REVISION	BY
X/X/X	0	BID SET	

APPROVED BY:

Rob English, PE

DATE: 3/3/2026

Ben Mahony	DESIGNED BY	2/26/2026 DATE
Ben Mahony	DRAWN BY	2/26/2026 DATE
I-Wen Yang, PE	REVIEWED BY	2/26/2026 DATE

CITY OF KIRKLAND WASHINGTON

CITY OF KIRKLAND
DEPARTMENT OF PUBLIC WORKS
123 FIFTH AVENUE KIRKLAND, WA 98033
(425) 587–3800 www.kirklandwa.gov

TELEMETRY PANEL - I/O MODULE 2 ANALOG, CONTROL WIRING DIGRAM (1)
SCADA REPLACEMENT

SUPPLY STATION 3 EXISTING CONTROL PANEL (REFERENCE)

REFERENCE SHEET NO.
SS3-EO2

SHEET
176
of
366

PUMP CONTROL PANEL

E0400
E0401
E0402
E0403
E0404
E0405
E0406
E0407
E0408
E0409
E0410
E0411
E0412
E0413
E0414
E0415
E0416
E0417
E0418
E0419
E0420
E0421
E0422

NOTE: FIELD TERMINATIONS WILL BE ADDED ON AS-BUILT DRAWINGS.

TELEMETRY PANEL

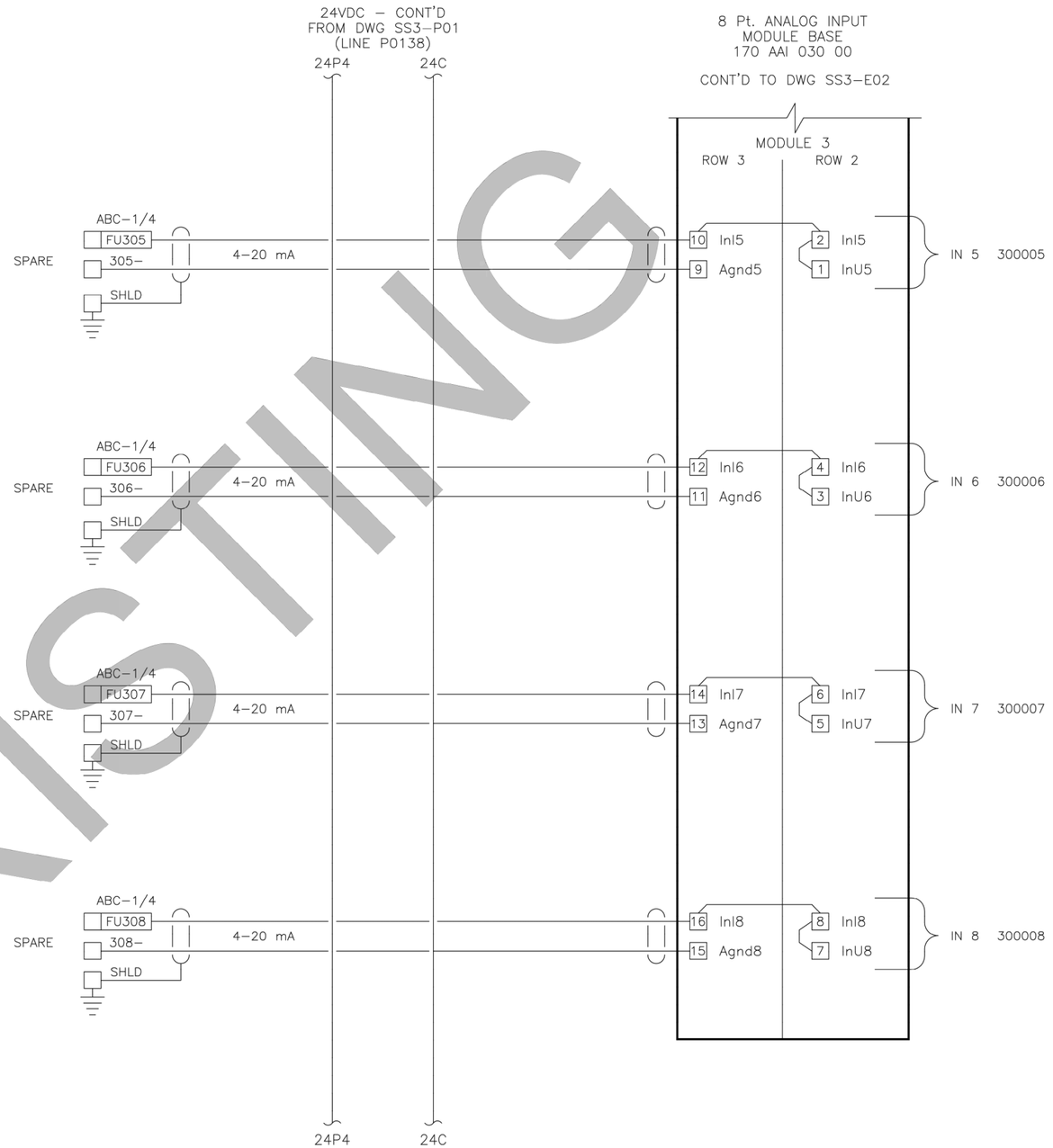

EXISTING

Know what's below. Call 811 before you dig.

DATE	NO.	REVISION	BY
X/X/X	0	BID SET	

APPROVED BY:

Rob English, PE

DATE: 3/3/2026

Ben Mahony (DESIGNED BY)	2/26/2026 (DATE)
Ben Mahony (DRAWN BY)	2/26/2026 (DATE)
I-Wen Yang, PE (REVIEWED BY)	2/26/2026 (DATE)

CITY OF KIRKLAND WASHINGTON

CITY OF KIRKLAND
DEPARTMENT OF PUBLIC WORKS
123 FIFTH AVENUE KIRKLAND, WA 98033
(425) 587–3800 www.kirklandwa.gov

TELEMETRY PANEL - I/O MODULE 2 ANALOG, CONTROL WIRING DIGRAM (2)

SCADA REPLACEMENT

SUPPLY STATION 3 EXISTING CONTROL PANEL (REFERENCE)

REFERENCE SHEET NO.
SS3-EO2A

SHEET 177 of 366

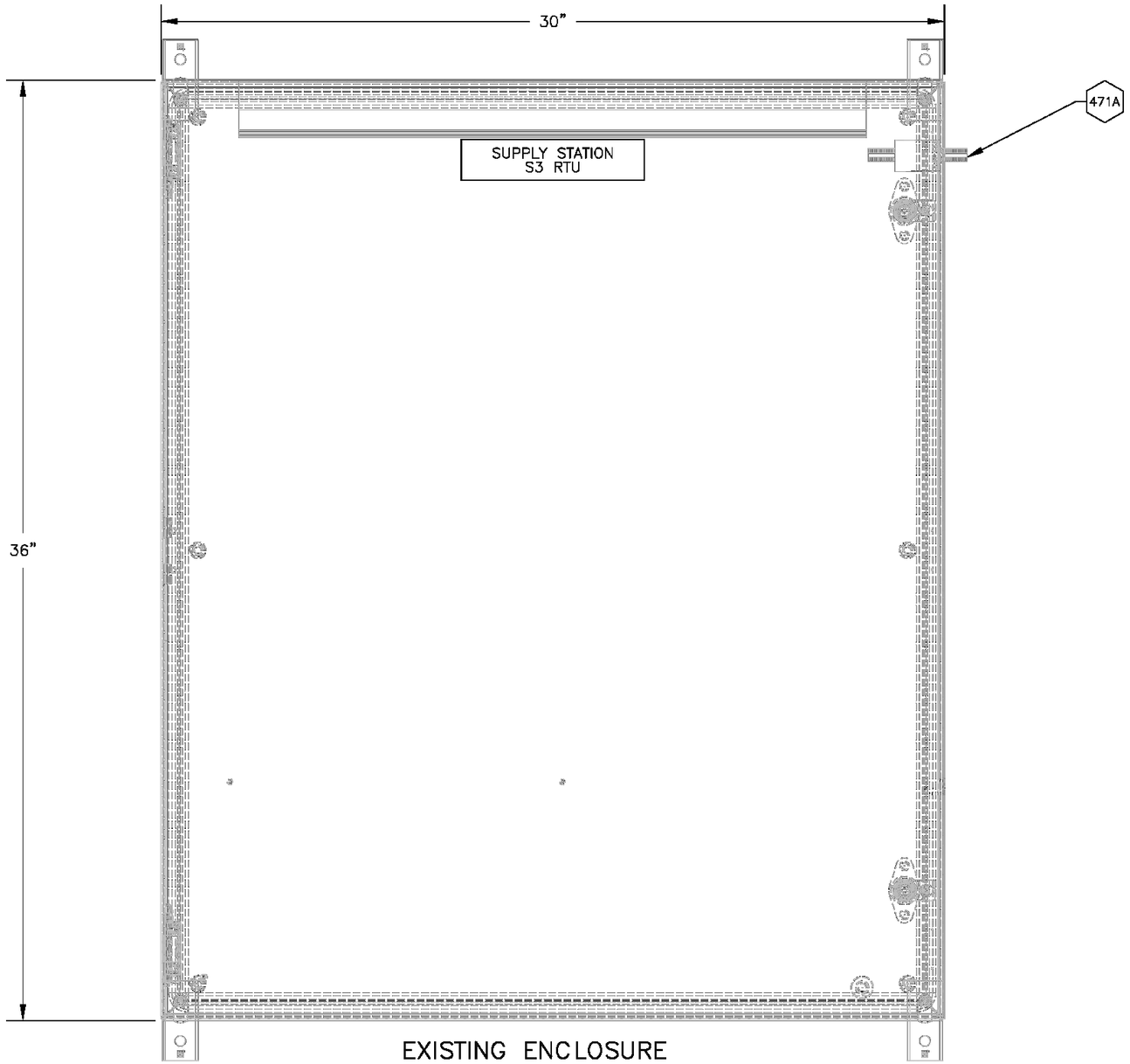

EXISTING ENCLOSURE

DEPTH OF PANEL = 12"

CONDUIT ENTRY
BOTTOM

NEMA RATING
4X

MATERIAL
304 STAINLESS STEEL

BUILD TYPE (FOR INTERNAL USE)
STANDARD

PANEL POWER SOURCE

PANEL xx CIRCUIT xx
120 VOLTS 1PH 60Hz

PANEL RATING

FULL LOAD AMPS 10A
SHORT CIRCUIT 10KAIC
LARGEST MOTOR FLA 000

XXX BOM ITEM NUMBER

Know what's below. Call 811 before you dig.

DATE	NO.	REVISION	BY
X/X/X	0	BID SET	

APPROVED BY:

Rob English, PE

DATE: 3/3/2026

Ben Mahony (DESIGNED BY)	2/26/2026 (DATE)
Ben Mahony (DRAWN BY)	2/26/2026 (DATE)
I-Wen Yang, PE (REVIEWED BY)	2/26/2026 (DATE)

CITY OF KIRKLAND WASHINGTON

CITY OF KIRKLAND
DEPARTMENT OF PUBLIC WORKS
123 FIFTH AVENUE KIRKLAND, WA 98033
(425) 587-3800 www.kirklandwa.gov

LAYOUT - PANEL - FRONT ELEVATION

SCADA REPLACEMENT

SUPPLY STATION 3 CONTROL PANEL (S3)

REFERENCE SHEET NO.
S3-10.00

SHEET 178 of 366