Set No. _____

Specifications, Proposal,
and Contract Documents for:

DAVID E. BRINK PARK SHORELINE RENOVATION

CIP No. PKC1331017
Job No. 51-20-PW

City of Kirkland
Department of Public Works
123 Fifth Avenue
Kirkland, Washington 98033

CITY OF KIRKLAND
DEPARTMENT OF PUBLIC WORKS

David E Brink Park Shoreline Renovation
CIP NO. PKC1331017
JOB NO. 51-20-PW

Certificate of Engineer:
The Special Provisions and drawings contained herein have been prepared by or under the direction of the undersigned, whose seal as a Professional Engineer licensed to practice in the State of Washington, is affixed below.

Anna Spooner, PLA
Landscape Architect, Anchor QEA
Divisions 03, 05, 08, and 09

David Rice, PE
Civil Engineer, Anchor QEA
Divisions 02, 03, 04, 05, 07, 08, and 09

Joe Galloway, PE
Structural Engineer, WSP
Divisions 06 and 09

Approved for Construction:

Rod Steitzer, P.E.
Capital Projects Manager

CITY OF KIRKLAND
GENERAL TABLE OF CONTENTS

Invitation to Bid ..... **(Tan)**

General Information, Proposal & Contract ..... **(White)**

Amendments to the Standard Specifications ..... **(Pink)**

Special Provisions ..... **(Blue)**

Prevailing Wage Rates ..... **(Yellow)**

Appendix A: Plans

Appendix B: Permits

Appendix C: Geotechnical Report

Appendix D: Stormwater TIR

Appendix E: Stormwater Pollution Prevention Plan

Appendix F: Critical Areas Report

Appendix G: Structural Engineering Calculations

Appendix H: Arborist Report

Appendix I: Cultural Resource Report

City of Kirkland

INVITATION TO BID

Notice is hereby given that the City of Kirkland will receive sealed bids in the office of the Purchasing Agent, City Hall, 123 Fifth Avenue, Kirkland, Washington, at 1:00 P.M. local time on May 5, 2021 for the project hereinafter referred to as:

David E Brink Park Shoreline Renovation
Project– JOB NO. 51-20-PW

At said time all bids will be opened and publicly read aloud. Each bid shall be accompanied by a bid proposal deposit in the form of a cashier's check or a bond issued on a form acceptable to your surety made payable to the City of Kirkland for a sum of not less than five percent (5%) of the total bid amount. No bid shall be considered unless accompanied by such bid proposal deposit. Incomplete proposals and proposals received after the time stated above will not be considered. Faxed or emailed responses are not acceptable.

The work to be performed under these specifications consists of furnishing all labor, tools, materials, and equipment necessary for construction of the **David E. Brink Park Shoreline Renovation Project.** Specific work includes, site demolition and clearing, earthwork, concrete paving, concrete curbs, concrete walls, sheet pile installation, rockery, rock revetment, stair construction, site furnishing installation, irrigation, landscape planting, construction of pocket beaches with woody debris, wood pier pile removal, pier resurfacing, replacement of pile cap beams/bracing, and all other items listed in the plans and project specifications. The estimated cost range for this project is $850,000 to $1,100,000.

The City will not sell bid packages. Plans, specifications, and addenda may be viewed and obtained online at *www.bxwa.com*. Click on: "Posted Projects," "Public Works," "City of Kirkland." The Bidders List is maintained by the Builder's Exchange of Washington, Inc. Registration for the bidder's list may be made online, by phoning (425) 258-1303, or at Builder's Exchange of Washington located at 2607 Wetmore Ave, Everett, WA.

The City of Kirkland in accordance with Title VI of the Civil Rights Act of 1964, 78 Stat. 252, 42 USC 2000d to 2000d-4 and Title 49, Code of Federal Regulations, Department of Transportation, Subtitle A, Office of the Secretary, Part 21, Nondiscrimination in Federally-Assisted Programs of the Department of Transportation issued pursuant to such Act, hereby notifies all bidders that it will affirmatively ensure that in any contract entered into pursuant to this advertisement, disadvantaged business enterprises as defined at 49 CFR Part 26 will be afforded full opportunity to submit bids in response to this invitation and will not be discriminated against on the grounds of race, color, national origin, or sex in consideration for an award.

Questions regarding this project shall be submitted in writing to Brian Baker via email to bbaker@kirklandwa.gov. Questions via phone will not be accepted. Bidders shall submit questions no later than April 28, 2021.

The City reserves the right to reject any and all bids, and to waive any informalities in the bidding, and to make the award to the lowest, responsive, responsible bidder as best serves the interests of the City.

No bids may be withdrawn within forty-five (45) days after the actual date of the bid opening.

Published: Daily Journal of Commerce – April 14, 2021, April 21, 2021 and April 28, 2021.

GENERAL INFORMATION, PROPOSAL, & CONTRACT

City of Kirkland

CITY OF KIRKLAND

TABLE OF CONTENTS – PROPOSAL

Information for Bidders 2
Bid Proposal 5
Bid Bond 9
Non-collusion Affidavit 10
Statement of Bidder's Qualifications 11
Subcontractor Identification 12
Bidder's Checklist 14

CITY OF KIRKLAND
INFORMATION FOR BIDDERS

Bidders must bid on all items contained in the proposal.

The omission or deletion of any bid item will be considered non-responsive and shall be cause for rejection of the bid.

Submit your proposal on the Bid Proposal and other forms which are enclosed, or make a copy of the required forms and submit these documents.

The following forms must be executed in full *with* submittal of the bid:

1. BIDDER RESPONSIBILITY CRITERIA CHECKLIST
2. SUBCONTRACTOR RESPONSIBILITY CRITERIA CHECKLIST
3. PROPOSAL

   The lump sum or unit prices must be shown in the spaces provided on the bid schedule.

   Show total bid price in both words and figures on the Proposal.

   The Proposal form must be completed in full, signed and dated.
4. BID BOND

   A surety issued bid bond must be executed by the bidder and its surety company. The amount of the bid bond shall be not less than five percent (5%) of the total amount bid and may be shown in dollars or on a percentage basis. (A cashier's check payable to the City of Kirkland and issued for an amount not less than 5% of the total bid may be submitted in lieu of a bid bond.)
5. NONCOLLUSION AFFIDAVIT - Notarized
6. STATEMENT OF BIDDER'S QUALIFICATIONS

   This form must be filled in and signed. The owner reserves the right to check all statements and to judge the adequacy of the bidder's qualifications.
7. SUBCONTRACTOR IDENTIFICATION LIST

   This form must be completed for HVAC, plumbing, and electrical subcontractors if the estimate exceeds $1,000,000.

The following forms are to be executed *after* the contract is awarded:

1. CONTRACT

   This agreement is to be executed by the successful bidder.
2. PERFORMANCE AND PAYMENT BOND

   To be executed by the successful bidder and its surety company.
3. CONTRACTOR'S DECLARATION OF OPTION FOR MANAGEMENT OF STATUTORY RETAINED PERCENTAGE; RETAINED PERCENTAGE ESCROW AGREEMENT

   To be executed by the successful bidder based on bidder's selection of option.
4. CERTIFICATES OF INSURANCE

   To be executed by the successful bidder and by an acceptable insurance company. The City of Kirkland must be named as an additional insured.
5. STATEMENT(S) OF INTENT TO PAY PREVAILING WAGES

   Affidavit certifying all employees of Contractor and Subcontractor shall be paid no less than the Prevailing Wage Rate(s) as determined by the Industrial Statistician of the Washington State Department of Labor and Industries.

SPECIAL NOTE: Prior to commencing work, the contractor and all subcontractors must have applied and paid for a City of Kirkland business license

CITY OF KIRKLAND
BIDDER RESPONSIBILITY CRITERIA

It is the intent of City to award a contract to the low responsible bidder. Before award, the bidder must meet the following bidder responsibility criteria to be considered a responsible bidder. The bidder may be required by the City to submit documentation demonstrating compliance with the criteria. The bidder must:

☐ 1. Have a current certificate of registration as a contractor in compliance with chapter 18.27 RCW, which must have been in effect at the time of bid submittal;

☐ 2. Have a current Washington Unified Business Identifier (UBI) number;

☐ 3. Have:

a. Industrial Insurance (workers' compensation) coverage for the bidder's employees working in Washington, as required in Title 51 RCW;

b. A Washington Employment Security Department number, as required in Title 50 RCW;

c. A Washington Department of Revenue state excise tax registration number, as required in Title 82 RCW;

☐ 4. Not be disqualified from bidding on any public works contract under RCW 39.06.010 or 39.12.065(3). **Meet responsibility criteria in RCW 39.04.350**

☐ 5. Until December 31, 2017, not have violated more than one time the off-site, prefabricated, non-standard, project specific items reporting requirements of RCW 39.04.370.

☐ 6. For public works projects subject to the apprenticeship utilization requirements of RCW 39.04.320, not have been found out of compliance by the Washington state apprenticeship and training council for working apprentices out of ratio, without appropriate supervision, or outside their approved work processes as outlined in their standards of apprenticeship under chapter 49.04 RCW for the one-year period immediately preceding the first date of advertising for the project.

CITY OF KIRKLAND
SUBCONTRACTOR RESPONSIBILITY CRITERIA

☐ A. The Contractor shall include the language of this section in each of its first tier subcontracts, and shall require each of its subcontractors to include the same language of this section in each of their subcontracts, adjusting only as necessary the terms used for the contracting parties. Upon request of the Owner, the Contractor shall promptly provide documentation to the Owner demonstrating that the subcontractor meets the subcontractor responsibility criteria below. The requirements of this section apply to all subcontractors regardless of tier.

☐ B. At the time of subcontract execution, the Contractor shall verify that each of its first tier subcontractors meets the following bidder responsibility criteria:

☐ 1. Have a current certificate of registration in compliance with chapter 18.27 RCW, which must have been in effect at the time of subcontract bid submittal;

☐ 2. Have a current Washington Unified Business Identifier (UBI) number;

☐ 3. Have:

a) Industrial Insurance (workers' compensation) coverage for the subcontractor's employees working in Washington, as required in Title 51 RC
b) A Washington Employment Security Department number, as required in Title 50 RCW;
c) A Washington Department of Revenue state excise tax registration number, as required in Title 82 RCW;
d) An electrical contractor license, if required by Chapter 19.28 RCW;
e) An elevator contractor license, if required by Chapter 70.87 RCW.

☐ 4. Not be disqualified from bidding on any public works contract under RCW 39.06.010 or 39.12.065 (3). **Meet responsibility criteria in RCW 39.04.350**

☐ 5. Until December 31, 2017, not have violated more than one time the off-site, prefabricated, non-standard, project specific items reporting requirements of RCW 39.04.370.

☐ 6. For public works projects subject to the apprenticeship utilization requirements of RCW 39.04.320, not have been found out of compliance by the Washington state apprenticeship and training council for working apprentices out of ratio, without appropriate supervision, or outside their approved work processes as outlined in their standards of apprenticeship under chapter 49.04 RCW for the one-year period immediately preceding the first date of advertising for the project.

CITY OF KIRKLAND
BID PROPOSAL

David E. Brink Park Shoreline Renovation
CIP NO. PKC1331017
JOB NO. 51-20-PW

To: Director of Finance
City of Kirkland
123 Fifth Avenue
Kirkland, Washington 98033

The undersigned, hereinafter called the Bidder, declares that the only persons or parties interested in this proposal are those named herein; that this proposal is in all respects fair and without fraud; that it is made without collusion with any official or employee of the City of Kirkland, hereinafter called the Owner; and that the proposal is made without any connection or collusion with any person making another proposal on this contract.

The bidder further declares that it has carefully examined the contract documents for the construction of the project; that it has personally inspected the site; that it has satisfied itself as to the quantities involved, including materials and equipment and conditions of work involved, including the fact that the description of the quantities of work materials, as included herein, is brief and is intended only to indicate the general nature of the work and to identify the said quantities with the detailed requirements of the contract documents; and that this proposal is made according to the provisions and under the terms of the contract documents, which documents are hereby made a part of this proposal.

The bidder further agrees that it has exercised its own judgment regarding the interpretation of subsurface information and has utilized all data which it believes pertinent from the engineer-architect, owner, and other sources in arriving at its conclusions.

The bidder agrees to hold its bid proposal open for 45 days after the actual date of bid opening and to accept the provisions of the Instructions to Bidders regarding disposition of bid bond.

The bidder agrees that if this proposal is accepted, it will, within ten (10) calendar days after notification of acceptance, execute the contract with the Owner in the form of contract included in the contract documents, and will, at the time of execution of the contract, deliver to the Owner the Performance and Payment Bond and all Certificates of Insurance required therein, and will, to the extent of its proposals, furnish all machinery, tools, apparatus, and other means of construction and do the work in the manner, in the time, and according to the methods as specified in the contract documents and required by the engineer or other project manager designated thereunder.

The bidder further agrees, if awarded the contract, to begin work within ten (10) calendar days after the date of the execution of the contract and to complete the construction within the time specified in Section 1-08.5 of the Special Provisions.

In the event the bidder is awarded the contract and shall fail to complete the work within the time limit or extended time limit agreed upon as more particularly set forth in the contract documents, liquidated damages shall be paid to the Owner per the specifications contained in the contract documents.

The bidder further proposes to accept as full payment for the work proposed herein, the amounts computed under the provisions of the contract documents and based upon the lump sum and unit price amounts entered by the bidder for the various bid items included in the Bid Schedule. The bidder further agrees the lump sum and unit prices entered for the various bid items included in the Bid Schedule include all use taxes, overhead, profit, bond premiums, insurance premiums and all other miscellaneous and incidental expenses as well as all costs of materials, labor, tools and equipment required to perform and complete the work.

Within the three-year period immediately preceding the date of the bid solicitation for this Project, bidder has not been determined by a final and binding citation and notice of assessment issued by the department of labor and industries or through a civil judgment entered by a court of limited or general jurisdiction to have willfully violated, as defined in RCW 49.48.082, any provision of chapter 49.46, 49.48, or 49.52 RCW.

The undersigned bids and agrees to complete all construction of the **David E. Brink Park Shoreline Renovation Project; JOB NO. 51-20-PW** for the following:

Total Computed Price *(in figures)*: $_____

Washington State Sales Tax **10.2%** *(in figures)*: $_____

Total Bid *(in figures)*: $_____

Total Bid *(in words)*: _____

_____

Receipt of Addenda No(s). _____ is hereby acknowledged.

I certify (or declare) under penalty of perjury under the laws of the State of Washington that the foregoing is true and correct:

_____	_____
CONTRACTOR (Firm Name)	Location or Place Executed: (City, State)
_____	_____
By	Name and title of person signing
_____	_____
(Indicate whether Contractor is Partnership, Corporation, or Sole Proprietorship)	Date
_____	_____
Washington State Contractor's Registration Number	Contractor's Industrial Insurance Account Number

MUST BE SUBMITTED WITH PROPOSAL

_____	_____
Employment Security Identification Number	Uniform Business Identification (UBI) Number

Contractor's Address:

_____	_____
	Telephone Number
_____	_____
	Fax Number
_____	_____
	EMAIL

** Bid proposal to be submitted in a **sealed envelope** marked "**Bid Enclosed**" for **David E. Brink Park Shoreline Renovation Project, JOB NO. 51-20-PW.**

CITY OF KIRKLAND
BID SCHEDULE

David E Brink Park Shoreline Renovation Project
JOB NO. 51-20-PW

Note: Unit prices for all items, all extensions, and the total amount of the bid must be shown. All entries must be typed or entered in ink.

Item No.	Item Description	Spec. Ref.	Est. Qty	Unit	Unit Price	Amount
1	Mobilization	1-09	1	LS		
2	Minor changes	1-04	1	FA	$25,000	
3	Record drawings	1-05	1	LS		
4	Construction Survey	1-05	1	LS		
5	Spill Prevention, Control, and Countermeasures Plan (SPCC)	1-07	1	LS		
6	Project temporary traffic control	1-10	1	LS		
7	Clearing, grubbing and roadside cleanup	2-01	1	LS		
8	Removal of structures and obstructions	2-02	1	LS		
9	Roadway excavation and embankment	2-03	891	CY		
10	Alternate A - Roadway excavation and embankment	2-03	39	CY		
11	Subgrade preparation	2-06	1	LS		
12	Structure excavation	2-09	1	LS		
13	Aggregate base course for paved areas, including sidewalks and pathways	4-04	19	CY		
14	Alternate A - Aggregate base course for paved areas within Alternate A area	4-04	12	CY		
15	Crushed Surfacing Top Course for retaining walls and stairs	4-04	50	CY		
16	Concrete walls - Type 1	6-02	105	LF		
17	Concrete walls - Type 2	6-02	213	LF		
18	Concrete walls - Type 3	6-02	120	LF		
19	Concrete thickened edge	6-02	80	LF		
20	Concrete wall - mow strip	6-02	18	LF		
21	Concrete stairs - north stair	6-02	1	LS		
22	Concrete stairs - south stair	6-02	1	LS		
23	Timber pier steel straps	6-03	37	EA		
24	Guardrail	6-03	1	LS		
25	Handrail	6-03	50	LF		
26	Timber pier repairs - misc. metals	6-03	1	LS		
27	Timber pier wood repairs - cross bracing	6-04	8	EA		
28	Timber pier repairs - pile caps and sub caps	6-04	40	LF		

29	FRP grating	6-04	3,026	SF		
30	Timber pier repairs - misc timber	6-04	1	LS		
31	Bull rail	6-04	390	LF		
32	Erosion control and water pollution control	8-01	1	LS		
33	PSIP - planting	8-02	1	LS		
34	PSIP - seeding	8-02	1	LS		
35	Anchored log with rootwad	8-02	2	EA		
36	Unanchored driftwood	8-02	2	EA		
37	Irrigation	8-03	1	LS		
38	Cement concrete sidewalk	8-14	343	SY		
39	Alternate A - Cement concrete sidewalk within Alternate A area	8-14	222	SY		
40	Light loose riprap	8-15	181	TON		
41	Quarry spalls	8-15	39	TON		
42	Habitat gravel	8-15	567	TON		
43	Alternate A - Habitat gravel within Alternate A area	8-15	37	TON		
44	Beach sand	8-15	78	TON		
45	Rock for rock wall	8-15	148	TON		
46	Salvaged rock	8-15	5	CY		
47	Cobble	8-15	110	CY		
48	Granite steps	8-19	1	LS		
49	Vinyl sheetpile wall with concrete cap	8-26	135	LF		
50	Site furnishings	8-27	1	LS		

TOTAL COMPUTED BASE BID PRICE: $_____

TOTAL COMPUTED ALTERNATE A PRICE: $_____

MUST BE SUBMITTED WITH PROPOSAL

BID DEPOSIT

Herewith find deposit in the form of a cashier's check or certified check in the amount of $_____which amount is not less than five percent (5%) of the total bid.

SIGN HERE_____

BID BOND

KNOW ALL PERSONS BY THESE PRESENTS:

That we, _____, as Principal, and _____, as Surety, are held and firmly bound unto the City of Kirkland, as Obligee, in the penal sum of _____ _____ dollars, for the payment of which the Principal and the Surety bind themselves, their heirs, executors, administrators, successors and assigns, jointly and severally, by these presents.

The condition of this obligation is such that if the Obligee shall make any award to the Principal for

_____ _____

Project Name Job Number

according to the terms of the proposal or bid made by the Principal therefor, and the Principal shall duly make and enter into a contract with the Obligee in accordance with the terms of said proposal or bid and award and shall give bond for faithful performance thereof, with Surety or Sureties approved by the Obligee; or if the Principal shall, in case of failure to do so, pay and forfeit to the Obligee the penal amount of the deposit specified in the call for bids, then this obligation shall be null and void; otherwise it shall be and remain in full force and effect and the Surety shall forthwith pay and forfeit to the Obligee, as penalty and liquidated damages, the amount of this bond.

SIGNED, SEALED AND DATED THIS _____ DAY OF _____, 20_____.

PRINCIPAL: SURETY:

_____ _____

_____ _____

Note: If a Bid Bond is provided, it must be accompanied by a power of attorney which appoints the Surety's true and lawful attorney-in-fact to make, execute, seal and deliver this Bid Bond.

CITY OF KIRKLAND
NONCOLLUSION AFFIDAVIT
David E. Brink Park Shoreline Renovation Project
CIP NO. PKC1331017
JOB NO. 51-20-PW

STATE OF WASHINGTON)
) SS
COUNTY OF KING)

The undersigned, being duly sworn, on oath deposes and says that the person(s), firm, association, partnership or corporation herein named has not, either directly or indirectly, entered into any agreement, participated in any collusion, or otherwise taken any action in restraint of free competitive bidding in connection with the project for which this proposal is submitted.

_____ _____
Firm Name Authorized Signature

_____
Type Name

_____
Title

Sworn to before me, this _____ day of _____, 20__.

_____
Notary Public in and for the State of Washington
Residing at _____
My Commission Expires _____

NOTICE TO ALL BIDDERS

To report bid rigging activities call: 1-800-424-9071

The U.S. Department of Transportation (USDOT) operates the above toll-free "hotline" Monday through Friday, 8:00 a.m. to 5:00 p.m., ET. Anyone with knowledge of possible bid rigging, bidder collusion, or other fraudulent activities should use the "hotline" to report such activities.

The "hotline" is part of USDOT's continuing effort to identify and investigate highway construction contract fraud and abuse and is operated under the direction of the USDOT Inspector General. All information will be treated confidentially and caller anonymity will be respected.

CITY OF KIRKLAND
STATEMENT OF BIDDER'S QUALIFICATIONS

Contractor Name: _____ Contact: _____

Business Address: _____

Business phone: _____ Fax: _____

Number of years the Contractor has been engaged in the construction business under the present firm name: _____

Describe the general character of work performed by your company: _____

_____

List five projects of a similar nature which Contractor has completed within the last 10 years. Include contract amount and contact information for references:

Project Name	Amount	Owner/Agency	Contact	Phone	Year Completed

List major equipment anticipated to be used on this project; indicate whether Contractor-owned or to be leased from others: _____

_____

_____

_____

Bank reference(s): _____

Washington State Contractor Registration No.: _____

Uniform Business Identification No.: _____

I certify that other contracts now in progress or hereafter obtained will not interfere with timely performance of the City of Kirkland project should I become the successful bidder.

Authorized Signature: _____

Print Name: _____Title: _____

CITY OF KIRKLAND
SUBCONTRACTOR IDENTIFICATION FOR CONTRACTS ESTIMATED TO BE IN EXCESS OF ONE MILLION DOLLARS ($1,000,000.00)

RCW 39.30.060 requires the following:

> "(1) Every invitation to bid on a prime contract that is expected to cost one million dollars or more for the construction, alteration, or repair of any public building or public work of the state or a state agency or municipality as defined under RCW 39.04.010 … shall require each prime contract bidder to submit:
>
> (a) Within one hour after the published bid submittal time, the names of the subcontractors with whom the bidder, if awarded the contract, will subcontract for performance of the work of: HVAC (heating, ventilation, and air conditioning); plumbing as described in chapter 18.106 RCW; and electrical as described in chapter 19.28 RCW, or to name itself for the work; or
>
> (b) Within forty-eight hours after the published bid submittal time, the names of the subcontractors with whom the bidder, if awarded the contract, will subcontract for performance of the work of structural steel installation and rebar installation.
>
> The prime contract bidder shall not list more than one subcontractor for each category of work identified, unless subcontractors vary with bid alternates, in which case the prime contract bidder must indicate which subcontractor will be used for which alternate. Failure of the prime contract bidder to submit as part of the bid the names of such subcontractors or to name itself to perform such work or the naming of two or more subcontractors to perform the same work shall render the prime contract bidder's bid non-responsive and, therefore, void."

Each bidder shall submit a list of:

1. HVAC, plumbing, electrical, structural steel installation, and rebar installation subcontractors; and

2. The specific items of work those subcontractors will perform on the contract; and

3. The specific items of work that will be performed by the bidder on the contract relating to work described in RCW 39.30.060.

CITY OF KIRKLAND
SUBCONTRACTOR IDENTIFICATION LIST

*REQUIRED IF ESTIMATE AMOUNT EXCEEDS $1,000,000 (*Reference RCW 39.30.060 RCW*)

Proposed Subcontractors and items of work to be performed:

Subcontractor Name: _____

Item Numbers: _____

_____

_____

_____

Subcontractor Name: _____

Item Numbers: _____

_____

_____

_____

Subcontractor Name: _____

Item Numbers: _____

_____

_____

_____

Subcontractor Name: _____

Item Numbers: _____

_____

_____

_____

- make additional pages if necessary -

Work to be performed by Prime Contractor:

Item Numbers: _____

_____

_____

_____

_____

CITY OF KIRKLAND
BIDDER'S CHECKLIST

1. Have you reviewed the Bidder Responsibility and Subcontractor Responsibility Criteria?
2. Have you enclosed a bid bond or certified check with your bid? (Must be at least 5% of the total amount bid)
3. Have you entered a bid amount for all items and all schedules?
4. Do the written amounts of the proposal agree with the amounts shown in the figures?
5. Have you acknowledged receipt of addenda?
6. Has the proposal been properly completed and signed?
7. Have you completed the Statement of Bidder's Qualifications?
8. Have you completed the City of Kirkland Non-collusion Affidavit?
9. Have you completed the Subcontractor Identification List? (This is to be completed for HVAC, plumbing, and electrical subcontractors if the estimate amount exceeds $1,000,000.)
10. Bid proposal to be submitted in a sealed envelope marked "Bid Enclosed" for:

CONTRACT

INFORMATION ONLY

The following forms must be executed and submitted by the successful bidder within ten (10) calendar days following Notice of Award.

City of Kirkland

CITY OF KIRKLAND

TABLE OF CONTENTS – CONTRACT DOCUMENTS

Contract 1

Performance and Payment Bond 3

Labor and Material Payment Bond 4

Contractor's Declaration of Option for Management of Statutory Retained Percentage 6

Retainage Bond 7

Retained Percentage Escrow Agreement 8

Retainage Release Requirements 11

CITY OF KIRKLAND
PUBLIC WORKS AGREEMENT

Version:063020

David E. Brink Park Shoreline Renovation

JOB NO. 51-20-PW

This agreement is made and entered into this _____day of_____, 20____, by and between **CONTRACTOR NAME**, hereinafter called the "Contractor" and the City of Kirkland, hereinafter called the "City."

W I T N E S S E T H:

Whereas, pursuant to the invitation of the City extended through an officially published "Invitation to Bid," the Contractor did, in accordance therewith, file with the City a proposal containing an offer which was invited by said notice, and

Whereas, the City has heretofore determined that said offer was the lowest responsible bid submitted; now, therefore, it is agreed:

Section 1. That Contractor shall comply in every way with the requirements of those certain specifications entitled: "David Brink Park Shoreline Renovation, Job No. 51-20-PW"

The further terms, conditions and covenants of the contract are set forth in the following contract documents which are hereby made a part of this agreement by actual attachment or by this reference thereto as follows:

A. Invitation to Bid, as published by the City.

B. Specifications prepared for this project by the City and named above by title.

C. Detailed Plans listed and described in said Specifications, together with those which may be issued as supplements thereof.

D. The bid proposals submitted by the Contractor as to those items and/or alternatives accepted by the City.

E. Any written change orders, additions or deletions, if any, issued by the City, pursuant to this agreement.

F. Indemnification and insurance provisions included in the project documents shall apply to this agreement.

Section 2. In consideration of faithful compliance with the terms and conditions of this agreement, whether set forth herein or incorporated by reference, the Owner shall pay to the Contractor, at the times and in the manner provided in said specifications, the total sum of _____ dollars **($**_____**)** which sum is subject, however, to increase or decrease in such proportion as the quantities named in said proposal are so changed, all as in said specifications and proposal provided.

In witness whereof, said Contractor and said City have caused this agreement to be executed on the day and year first written above.

_____

CONTRACTOR (Firm Name)

Signature of authorized officer	Name and title of officer (print or type)
WA Contractor's Registration Number	Industrial Insurance Account Number
Uniform Business Identification (UBI) Number	Phone Number

(For corporations, LLC's and other legal entities)

STATE OF WASHINGTON)
) SS
COUNTY OF KING)

On this day before me, the undersigned, a Notary Public in and for the State of Washington, duly commissioned and sworn, personally appeared _____, to me known to be the _____ of _____, the legal entity that executed the foregoing instrument, and acknowledged the said instrument to be the free and voluntary act and deed of said legal entity, for the uses and purposes therein set forth, and on oath stated that he/she was authorized to sign said instrument.

Given under my hand and official seal this _____ day of _____, 2____.

_____
Print Name: _____
NOTARY PUBLIC in and for the State of
Washington, residing _____
Commission expires: _____

(For individuals and d/b/a's)

STATE OF WASHINGTON)
) SS
COUNTY OF KING)

On this day before me, the undersigned, a Notary Public in and for the State of Washington, duly commissioned and sworn, personally appeared _____ and _____ to me known to be the individual(s) described herein and who executed the foregoing instrument, and acknowledged that he/she/they signed the same as his/her/their free and voluntary act and deed, for the uses and purposes therein mentioned.

Given under my hand and official seal this _____ day of _____, 2____.

_____
Print Name: _____
NOTARY PUBLIC in and for the State of
Washington, residing _____
Commission expires: _____

CITY OF KIRKLAND

BY: _____
Tracey Dunlap, Deputy City Manager

PERFORMANCE BOND

Surety to have an A.M. Best rating of A-:VII or better.

Bond No. _____

KNOW ALL PERSONS BY THESE PRESENTS, that **CONTRACTOR NAME**, as Principal, and _____, (insert name of surety), as Surety, a corporation duly organized under the laws of the State of _____, (insert Surety's state of incorporation), and authorized to do business as a surety in the State of Washington, are held and firmly bound unto the City of Kirkland (City) in the sum of _____ dollars **($_____)**, lawful money of the United States of America, plus the total amount of extra orders issued by the City to the Principal pursuant to the terms of the Contract referred to in the next succeeding paragraph hereof, for the payment whereof Principal and Surety bind ourselves, and our heirs, executors, administrators, representatives, successors, and assigns, jointly and severally, firmly by these presents.

WHEREAS, the Principal has been awarded, and is about to enter into, a written Contract with the City for **David E. Brink Park Shoreline Renovation Project**, **Job #51-20-PW**, which is hereby made a part of this bond as if fully set forth herein;

NOW, THEREFORE, the condition of this bond is such that:

1. If the Principal shall completely and faithfully perform all of its obligations under the Contract, including any warranties required thereunder, and all modifications, amendments, additions, and alterations thereto, including modifications which increase the contract price or time for completion, with or without notice to the surety; and
2. If the Principal shall indemnify and hold the City harmless from any and all losses, liability, damages, claims, judgments, liens, costs, and fees of any type that the City may be subject to because of the failure or default of the Principal in the performance of any of the terms, conditions, or obligations of the Contract, including all modifications, amendments, additions, and alterations thereto, and any warranties required thereunder;

THEN THIS obligation shall be null and void; otherwise to remain in full force and effect. If the City shall declare Principal to be in default of the Contract, and shall so notify Surety, Surety shall, within a reasonable time which shall not exceed 14 days, except for good cause shown, notify the City in writing of the manner in which surety will satisfy its obligations under this Bond.

Nonpayment of the Bond premium will not invalidate this Bond nor shall the City be obligated for the payment thereof. The Surety hereby waives notice of any modification of the Contract or extension of time made by the City.

Signed this _____ day of _____, 2____.

Principal:	_____	Surety:	_____
By:	_____	By:	_____
Title:	_____	Title:	_____
Address:	_____	Address:	_____
City/Zip:	_____	City/Zip:	_____
Telephone:	( ) _____	Telephone:	( ) _____

Note: A power of attorney must be provided which appoints the Surety's true and lawful attorney-in-fact to make, execute, seal and deliver this performance bond.

LABOR, MATERIAL AND TAXES PAYMENT BOND

Surety to have an A.M. Best rating of A-:VII or better.

Bond No. _____

KNOW ALL PERSONS BY THESE PRESENTS, that, **CONTRACTOR NAME**, as Principal, and _____, (insert name of surety), as Surety, a corporation duly organized under the laws of the State of _____ (insert Surety's state of incorporation), and authorized to do business as a surety in the State of Washington, are held and firmly bound unto the City of Kirkland (City) for the use and benefit of claimants as hereinafter defined, in the sum of _____ **Dollars ($_____),** lawful money of the United States of America, plus the total amount of any extra orders issued by the City, for the payment whereof Principal and Surety bind themselves, their heirs, executors, administrators, representatives, successors, and assigns, jointly and severally, firmly by these presents.

WHEREAS, Principal has been awarded, and is about to enter into, a Contract with City of Kirkland for **David E. Brink Park Shoreline Renovation Project, Job #51-20-PW**, which contract is by this reference made a part hereof;

WHEREAS, the contract is a public works contract, subject to the provisions of RCW Titles 39 and 60;

NOW, THEREFORE, the conditions of this obligation are such that, if the Principal shall promptly make payment to all claimants as hereinafter defined, for (a) all labor and material used or reasonably required for use in the performance of the contract and (b) all taxes, increases, and penalties incurred on the above-referenced contract under Titles 50, 51, and 82 RCW which may be due, then this obligation shall be void; otherwise, it shall remain in full force and effect, subject, however, to the following conditions: A claimant is defined as and includes (a) a person claiming to have supplied labor or materials for the prosecution of the work provided for in the contract, including any person having direct contractual relationship with the contractor furnishing the bond or direct contractual relationship with any subcontractor, or an assignee of such person, (b) the state with respect to taxes incurred on the above-referenced contract under Titles 50, 51, and 82 RCW which may be due and (c) any other person or entity as allowed or required by law.

3. The Principal and Surety hereby jointly and severally agree with the City that every claimant as herein defined, who has not been paid in full prior to Final Acceptance of the project, or materials were furnished by such claimant, has an action on this bond for such sum or sums as may be justly due claimant, and may have execution thereon. The City shall not be liable for the payment of any costs or expenses of any such suit or action.

(Form continues on next page)

4. No suit or action shall be commenced hereunder by any claimant (except the state with respect to taxes, increases, and penalties incurred on the above-referenced contract under Titles 50, 51, and 82 RCW which may be due) unless the claimant has sent the written notice required under RCW Title 39 to the Principal and to the City's Purchasing Agent by registered or certified mail, or by hand delivery, no later than 30 days after Final Acceptance of the Project.

The amount of this bond shall be reduced by and to the extent of any payment or payments made in good faith hereunder, inclusive of the payment by Surety of mechanics' liens which may be filed of record against the improvement, whether or not claim for the amount of such lien be presented under and against this bond.

The Surety hereby waives notice of any modification of the contract or extension of time made by the City.

Signed this _____ day of _____ , 2____

Principal: _____	Surety: _____
By: _____	By: _____
Title: _____	Title: _____
Address: _____	Address: _____
City/Zip: _____	City/Zip: _____
Telephone: ( ) _____	Telephone: ( ) _____

Note: A power of attorney must be provided which appoints the Surety's true and lawful attorney-in-fact to make, execute, seal and deliver this performance bond.

END OF LABOR, MATERIAL AND TAXES PAYMENT BOND FORM

CITY OF KIRKLAND
CONTRACTOR'S DECLARATION OF OPTION FOR MANAGEMENT OF STATUTORY RETAINED PERCENTAGE
David E. Brink Park Shoreline Renovation Project
JOB NO. 51-20-PW

Monies reserved under provisions of Chapter 60.28 RCW, at the option of the Contractor, shall be:

Select One

[ ] (1) Retained in a fund by the City. No interest will be earned on the retained percentage amount under this election.

[ ] (2) Retainage Bond

[ ] (3) Placed in escrow with a bank or trust company by the City. When the monies reserved are to be placed in escrow, the City will issue a check representing the sum of the monies reserved payable to the bank or trust company and the Contractor jointly. Such check shall be converted into bonds and securities chosen by the Contractor and approved by the City and the bonds and securities held in escrow. (For the convenience of those Contractors choosing option (3) a City approved Form of Escrow Agreement is included on the next page and should be completed and submitted with the executed contract.)

The Contractor in choosing option (3) agrees to assume full responsibility to pay all costs which may accrue from escrow services, brokerage charges or both, and further agrees to assume all risks in connection with the investment of the retained percentages in securities.

[ ] (4) Deposited by the City in an interest-bearing account at the FDIC insured bank currently providing contracted banking services to the City of Kirkland. Interest on such account shall be paid to the contractor. Any fees incurred shall be the responsibility of the contractor.

CONTRACTOR:

Signature: _____

Print or Type Name: _____

Title: _____

Date: _____

RETAINAGE BOND
RETURN THIS FORM IF RETAINAGE BOND OPTION IS SELECTED

Contract Title	_____
Contract Number	_____
Contractor Name	

The Undersigned, _____, existing under and by virtue of the laws of the State of Washington and authorized to do business in the State of Washington as Principal, and _____ organized and existing under the laws of the State of _____ and authorized to transact business in the State of Washington as Surety, are jointly and severally held and bound unto_____, hereinafter called Obligee, and are similarly held and bound unto the beneficiaries of the trust fund created by RCW 60.28, in the penal sum of _____
($_____), Which is 5% of the principal's price on Contract ID_____.

WHEREAS, on the _____ day of _____, 2____, the said principal herein executed a contract with the Obligee, for the Contract specified above, Contract ID Number_____.

WHEREAS, said contract and RCW 60.28 require the Obligee to withhold from the Principal the sum of ___% from monies earned on estimates during the progress of the construction, herein after referred to as earned retained funds.

NOW WHEREAS, Principal has requested that the Obligee not retain any earned retained funds as allowed under RCW 60.28.

NOW THEREFORE, the condition of the obligation is such that the Principal and Surety are held and bound unto the beneficiaries of the trust fund created by RCW 60.28 in the penal sum of _____ percent (___%) of the final contract cost which shall include any increases due to change orders, increases in quantities of work or the addition of any new item of work. If the Principal shall use the earned retained funds, which will not be retained, for the trust fund purposes of RCW 60.28, then this obligation shall be null and void; otherwise, it shall remain in full force and effect until release is authorized in writing by the Obligee. This bond and any proceeds therefrom shall be made subject to all claims and liens and in the same manner and priority as set forth for retained percentages in RCW 60.28.

PROVIDED HOWEVER, that:

1. The liability of the surety under this bond shall not exceed 5% or 50% of the total amount earned by the Principal if no monies are retained by the Obligee on estimates during the progress of construction.
2. Any suit under this bond must be instituted within the time provided by applicable law.

Witness our hands this _____ day of _____, 2____.

SURETY	**PRINICPAL**
By:_____	By:_____
Name/Title	Name/Title
OF:_____	OF:_____

Surety Name and Local Office of Agent:_____

Surety Address and Phone of Local Office and Agent:_____

_____

CITY OF KIRKLAND
RETAINED PERCENTAGE ESCROW AGREEMENT
David E. Brink Park Shoreline Renovation Project
JOB NO. 51-20-PW

Escrow No. _____

City of Kirkland
123 Fifth Avenue
Kirkland, Washington 98033

Contractor: _____

Address: _____

Project Description: _____

_____

_____

TO: Escrow Bank or Trust Company:

Name: _____

Address: _____

_____

Attention: _____

The undersigned, _____, herein referred to as the Contractor, has directed the City of Kirkland to deliver to you its warrants, which shall be payable to you and the Contractor jointly. Such warrants are to be held and disposed of by you in accordance with the following instructions and upon the terms and conditions hereinafter set forth.

INSTRUCTIONS

1. Warrants or checks made payable to you and the Contractor jointly upon delivery to you shall be endorsed by you and forwarded for collection. The moneys will then be used by you to purchase, as directed by the Contractor, bonds or other securities chosen by the Contractor and approved by the City of Kirkland. Attached is a list of such bonds, or other securities approved by the City of Kirkland. Other bonds or securities, except stocks, may be selected by the Contractor, subject to the express written approval of the City of Kirkland. Purchase of such bonds or other securities shall be in a form which shall allow you alone to reconvert such bonds or other securities into money if you are required to do so at the direction of the City of Kirkland and Contractor.

2. When and as interest on the securities held by you pursuant to this agreement accrues and is paid, you shall collect such interest and forward it to the Contractor at its address designated below unless otherwise directed by the Contractor.

3. You are not authorized to deliver to the Contractor all or any part of the securities held by you pursuant to this agreement (or any moneys derived from the sale of such securities, or the negotiation of the City of Kirkland's warrants) except in accordance with written instructions from the City of Kirkland. Compliance with such instructions shall relieve you of any further liability related thereto. The estimated completion date on the contract underlying this Escrow Agreement is _____.

4. The Contractor agrees to pay you as compensation for your services hereunder as follows:

   Payment of all fees shall be the sole responsibility of the Contractor and shall not be deducted from any property placed with you pursuant to this agreement until and unless the City of Kirkland directs the release to the Contractor of the securities and moneys held hereunder whereupon you shall be granted a first lien upon such property released and shall be entitled to reimburse yourself from such property for the entire amount of your fees as provided for hereinabove. In the event that you are made a party to any litigation with respect to the property held by you hereunder, or in the event that the conditions of this escrow are not promptly fulfilled or that you are required to render any service not provided for in these instructions, or that there is any assignment of the interests of this escrow or any modification hereof, you shall be entitled to reasonable compensation for such extraordinary services from the Contractor and reimbursement from the Contractor for all costs and expenses, including attorneys fees occasioned by such default, delay, controversy, or litigation.

5. This agreement shall not be binding until executed by the Contractor and the City of Kirkland and accepted by you.

6. This instrument contains the entire agreement between you, the Contractor and the City of Kirkland, with respect to this escrow and you are not a part nor bound by any instrument or agreement other than this; you shall not be required to take notice of any default or any other matter nor be bound by nor required to give notice or demand, nor required to take any action whatever, except as herein expressly provided; you shall not be liable for any loss or damage not caused by your own negligence or willful misconduct.

7. The foregoing provisions shall be binding upon the assigns, successors, personal representatives, and heirs of the parties hereto.

8. The Contractor's Federal Income Tax Identification number is _____.

****** Please note: Written release will be issued by the Director of Finance & Administration. For further information, contact the Purchasing Agent at (425) 587-3123.

The undersigned have read and hereby approve the instructions as given above governing the administration of this escrow and do hereby execute this agreement on this _____ day of _____, 2____.

CONTRACTOR:

By: _____
Signature

_____
Print or Type Name

_____
Title

Address: _____

_____

CITY OF KIRKLAND:

By: _____
Signature

_____
Print or Type Name

_____
Title

123 Fifth Avenue

Kirkland, Washington 98033

The above escrow instructions received and accepted this _____ day of _____, 2____.

ESCROW BANK OR TRUST CO:

_____

By: _____
Authorized Signature

_____
Print or Type Name

_____
Title

Securities Authorized by City of Kirkland (select one):

1. Bills, certificates, notes or bonds of the United States;
2. Other obligations of the United States or its agencies;
3. Obligations of any corporation wholly-owned by the government of the United States;
4. Indebtedness of the Federal National Mortgage Association; and
5. Time deposits in commercial banks.

RETURN THIS SIGNED AGREEMENT TO:

City of Kirkland
Attn: Purchasing Agent
123 Fifth Avenue
Kirkland, Washington 98033

CITY OF KIRKLAND
RETAINAGE RELEASE REQUIREMENTS

DOCUMENTS REQUIRED TO BE ON FILE PRIOR TO RELEASE OF RETAINAGE

1. Intent to Pay Prevailing Wage (Contractor must generation including for subcontractors)

   Department of Labor/Industries
   Employment Standards Division
   General Administration Building
   Olympia, Washington 98504
   (360) 956-5335

2. Notice of Completion of Public Works Contract (City generates)

   Department of Revenue
   Excise Tax Division
   Olympia, Washington 98504

3. Affidavit of Wages Paid (Contractor must generate including for subcontractors)

   Department of Labor/Industries

4. Certificate of Release - State Excise Tax by Public Works Contractor (Letter from State to City)

   Department of Revenue
   Department of Labor and Industries
   Employment Security Department

5. Receipt for Payment in full or Release of Lien signed by Lien Claimant and filed with City (Responsibility of Contractor to obtain)

   Claims against retainage or Payment Bond filed with City by any such subcontractor, workman, or material supplier.

6. Current insurance certificate through retainage release (Contractor generates)
7. Produce final invoice for retainage if bond is not selected (Contractor generates)

AMENDMENTS TO THE STANDARD SPECIFICATIONS

Provided under a separate cover

City of Kirkland

GENERAL SPECIAL CONDITIONS

City of Kirkland

TABLE OF CONTENTS—GENERAL SPECIAL PROVISIONS
David E. Brink Park Shoreline Renovation

DIVISION 01 – GENERAL REQUIREMENTS

DIVISION 02 – EARTHWORK

DIVISION 03 – AGGREGATE PRODUCTION AND ACCEPTANCE

DIVISION 04 – BASES

DIVISION 05 – SURFACE TREATMENTS AND PAVEMENTS

DIVISION 06 – STRUCTURES

DIVISION 07 – DRAINAGE STRUCTURES, STORM SEWERS, SANITARY SEWERS, WATER MAINS, AND CONDUITS

DIVISION 08 – MISCELLANEOUS CONSTRUCTION

DIVISION 09 – MATERIALS

GSP DIVISION 1

City of Kirkland

BID SET

SPECIAL PROVISIONS

Supplement to

2021

WSDOT Standard Specifications

City of Kirkland
TABLE OF CONTENTS - SPECIAL PROVISIONS

CITY OF KIRKLAND SPECIAL PROVISIONS IV
INTRODUCTION iv
DIVISION 1 GENERAL REQUIREMENTS 29
DESCRIPTION OF WORK 29
1-01 DEFINITIONS AND TERMS 29
1-01.3 Definitions 29
1-02 BID PROCEDURES AND CONDITIONS 30
1-02.1 Prequalification of Bidders 30
1-02.1 Qualifications of Bidder 31
1-02.1(1) Supplemental Qualifications Criteria 31
1-02.2 Plans and Specifications 33
1-02.4(1) General 33
1-02.4(2) Subsurface Information 33
1-02.5 Proposal Forms 34
1-02.6 Preparation of Proposal 34
1-02.7 Bid Deposit 35
1-02.8 Noncollusion Declaration and Lobbying Certification 35
1-02.9 Delivery of Proposal 35
1-02.10 Withdrawing, Revising, or Supplementing Proposal 36
1-02.13 Irregular Proposals 36
1-02.14 Disqualification of Bidders 37
1-02.15 Pre Award Information 40
1-03 AWARD AND EXECUTION OF CONTRACT 40
1-03.1 Consideration of Bids 40
1-03.3 Execution of Contract 41
1-03.4 Contract Bond 41
1-03.4(1) Retainage in Lieu of Contract Bond ..... **Error! Bookmark not defined.**
1-03.7 Judicial Review 42
1-04 SCOPE OF THE WORK 42
1-04.1 Intent of the Contract 42
1-04.2 Coordination of Contract Documents, Plans, Special Provisions, Specifications, and Addenda 42
1-04.6 Variation in Estimated Quantities 43
1-04.11 Final Cleanup 43
1-05 CONTROL OF WORK 44
1-05.4 Conformity with and Deviations from Plans and Stakes 44
1-05.4(1) Roadway and Utility Surveys 44
1-05.4(2) Bridge and Structure Surveys 46
1-05.7 Removal of Defective and Unauthorized Work 46
1-05.9 Equipment 47
1-05.10 Guarantees 47
1-05.11 Final Inspection 47

1-05.11 Final Inspections and Operational Testing 48
1-05.11(1) Substantial Completion Date 48
1-05.11(2) Final Inspection and Physical Completion Date 48
1-05.11(3) Operational Testing 48
1-05.12 Final Acceptance 49
1-05.12(1) One-Year Guarantee Period 49
1-05.13 Superintendents, Labor and Equipment of Contractor 49
1-05.15 Method of Serving Notices 49
1-05.16 Water and Power 50
1-05.18 Record Drawings 50
1-06 CONTROL OF MATERIAL 53
1-06.1 Approval of Materials Prior to Use 53
1-06.1(4) Fabrication Inspection Expense 53
1-06.6 Recycled Materials 53
1-07 LEGAL RELATIONS AND RESPONSIBILITIES TO THE PUBLIC 54
1-07.1 Laws to Be Observed 54
1-07.2 State Taxes 55
1-07.2 State Sales Tax 55
1-07.2(1) State Sales Tax — Rule 171 56
1-07.2(2) State Sales Tax — Rule 170 56
1-07.2(3) Services 56
1-07.11 Requirements for Nondiscrimination 58
Voluntary Minority, Small, Veteran and Women's Business Enterprise (MSVWBE) Participation 58
1-07.14 Responsibility for Damage 59
1-07.15 Temporary Water Pollution/Erosion Control 60
1-07.15(1) Spill Prevention, Control, and Countermeasures Plan 60
1-07.16 Protection and Restoration of Property 60
1-07.16(3) Fences, Mailboxes, Incidentals 60
1-07.17 Utilities and Similar Facilities 61
1-07.17(2) Utility Construction, Removal or Relocation by Others 63
1-07.18 Public Liability and Property Damage Insurance 63
1-07.18 Insurance 63
1-07.18(1) General Requirements 63
1-07.18(2) Additional Insured 64
1-07.18(3) Subcontractors 64
1-07.18(4) Verification of Coverage 64
1-07.18(5) Coverages and Limits 65
1-07.18(5)A Commercial General Liability 65
1-07.18(5)B Automobile Liability 65
1-07.18(5)C Workers' Compensation 65
1-07.18(5)D Excess or Umbrella Liability 66
1-07.18(5)E LHWCA Insurance 66
1-07.18(5)F Protection & Indemnity Insurance Including Jones Act 66
1-07.18(5)G Hull and Machinery 66
1-07.18(5)H Marine Pollution 66
1-07.18(5)I Builder's Risk 67
1-07.18(5)J Pollution Liability 67
1-07.18(5)K Professional Liability 68
1-07.23 Public Convenience and Safety 68
1-07.23(1) Construction under Traffic 69
1-07.24 Rights of Way 69
1-08 PROSECUTION AND PROGRESS 71
1-08.0 Preliminary Matters 71
1-08.0(1) Preconstruction Conference 71
1-08.0(2) Hours of Work 72
1-08.0(2) Hours of Work ..... **Error! Bookmark not defined.**

1-08.1 Subcontracting 73
1-08.1 Subcontracting 73
1-08.3 Progress Schedule 74
1-08.3(2)A Type A Progress Schedule 74
1-08.3(2)B Type B Progress Schedule 74
1-08.4 Prosecution of Work 75
1-08.4 Notice to Proceed and Prosecution of Work 75
1-08.5 Time for Completion 75
1-08.9 Liquidated Damages 76
1-08.9 Liquidated Damages 76
1-09 MEASUREMENT AND PAYMENT 77
1-09.2 Weighing Equipment 77
1-09.2(1) General Requirements for Weighing Equipment 77
1-09.2(1) General Requirements for Weighing Equipment 77
1-09.2(1) General Requirements for Weighing Equipment 77
1-09.2(5) Measurement 78
1-09.6 Force Account 78
1-09.9 Payments 78
1-09.9 Payments 79
1-09.11(3) Time Limitation and Jurisdiction 80
1-09.13 Claims Resolution ..... **Error! Bookmark not defined.**
1-09.13(3) Claims $250,000 or Less ..... **Error! Bookmark not defined.**
1-09.13(3) Claims $250,000 or Less 80
1-09.13(3)A Administration of Arbitration 80
1-10 TEMPORARY TRAFFIC CONTROL 80
1-10.2 Traffic Control Management 80
1-10.2(2) Traffic Control Plans 80
1-10.3 Traffic Control Labor, Procedures, and Devices 81
1-10.3(3)C Portable Changeable Message Sign 81
1-10.5 Payment 81
1-10.5(1) Lump Sum Bid for Project (No Unit Items) 81

CITY OF KIRKLAND SPECIAL PROVISIONS

INTRODUCTION

The work on this project shall be accomplished in accordance with the Standard Specifications for Road, Bridge and Municipal Construction, **2021** edition, as issued by the Washington State Department of Transportation (WSDOT) and the American Public Works Association (APWA), Washington State Chapter (hereafter "Standard Specifications"). The Standard Specifications, as modified or supplemented by the Amendments to the Standard Specifications and these Special Provisions, all of which are made a part of the Contract Documents, shall govern all of the Work.

These Special Provisions supersede any conflicting provisions of the Standard Specifications, and the foregoing Amendments to the Standard Specifications.

The accompanying Plans and these Specifications and any Addenda thereto, show and describe the location and type of work to be performed under the **David E. Brink Park Shoreline Renovation Project**.

These Special Provisions are made up of both General Special Provisions (GSPs) from various sources, which may have project-specific fill-ins; and project-specific Special Provisions. Each Provision supplements, modifies, or replaces the comparable Standard Specification, or is a new Provision. The deletion, amendment, alteration, or addition to any subsection or portion of the Standard Specifications is meant to pertain only to that particular portion of the section, and in no way should it be interpreted that the balance of the section does not apply.

The titles of headings of the Sections and subsections herein are intended for convenience or reference and shall not be considered as having any bearing on their interpretation.

Several types of Special Provisions are included in this contract and are differentiated as follows:

General Special Provisions (GSPs) are similar to Standard Specifications in that they typically apply to many projects and are used by agencies throughout the state. Denoted as: ***(date)***

Local Agency Approved GSPs are modifications to the standard specifications prepared by the APWA Division 1 subcommittee, which is comprised of representatives of local agencies throughout the state. APWA GSPs replace what was formerly referred to as "Division 1-99 APWA Supplement" in previous editions of the Standard Specifications for Road, Bridge and Municipal Construction. Denoted as: ***(date APWA GSP)***

City of Kirkland GSPs are commonly applicable to City of Kirkland projects. Denoted as: ***(date COK GSP)***

Project Specific Special Provisions normally appear only in the contract for which they were developed. Denoted as: ***(******)***

Also incorporated into the Contract Documents by reference are:

- Manual on Uniform Traffic Control Devices for Streets and Highways, currently adopted edition, with Washington State modifications, if any
- Standard Plans for Road, Bridge and Municipal Construction, WSDOT/APWA, current edition
- City of Kirkland Public Works Department Pre-Approved Plans and Policies.

Contractor shall obtain copies of these publications, at Contractor's own expense.

DIVISION 1 GENERAL REQUIREMENTS

DESCRIPTION OF WORK

This contract provides for the improvement of the David E. Brink Park Shoreline Renovation Project which proposes renovation of that park's shoreline infrastructure, providing habitat enhancements, and other work, all in accordance with the attached Contract Plans, these Contract Provisions, and the Standard Specifications.

1-01 DEFINITIONS AND TERMS

(January 4, 2016 APWA GSP)

1-01.3 Definitions

Delete the heading **Completion Dates** and the three paragraphs that follow it, and replace them with the following:

Dates

Bid Opening Date
The date on which the Contracting Agency publicly opens and reads the Bids.

Award Date
The date of the formal decision of the Contracting Agency to accept the lowest responsible and responsive Bidder for the Work.

Contract Execution Date
The date the Contracting Agency officially binds the Agency to the Contract.

Notice to Proceed Date
The date stated in the Notice to Proceed on which the Contract time begins.

Substantial Completion Date
The day the Engineer determines the Contracting Agency has full and unrestricted use and benefit of the facilities, both from the operational and safety standpoint, any remaining traffic disruptions will be rare and brief, and only minor incidental work, replacement of temporary substitute facilities, plant establishment periods, or correction or repair remains for the Physical Completion of the total Contract.

Physical Completion Date
The day all of the Work is physically completed on the project. All documentation required by the Contract and required by law does not necessarily need to be furnished by the Contractor by this date.

Completion Date
The day all the Work specified in the Contract is completed and all the obligations of the Contractor under the contract are fulfilled by the Contractor. All documentation required by the Contract and required by law must be furnished by the Contractor before establishment of this date.

Final Acceptance Date
The date on which the Contracting Agency accepts the Work as complete.

Supplement this Section with the following:

All references in the Standard Specifications, Amendments, or WSDOT General Special Provisions, to the terms “Department of Transportation”, “Washington State Transportation Commission”, “Commission”, “Secretary of Transportation”, “Secretary”, “Headquarters”, and “State Treasurer” shall be revised to read “Contracting Agency”.

All references to the terms “State” or “state” shall be revised to read “Contracting Agency” unless the reference is to an administrative agency of the State of Washington, a State statute or regulation, or the context reasonably indicates otherwise.

All references to “State Materials Laboratory” shall be revised to read “Contracting Agency designated location”.

All references to “final contract voucher certification” shall be interpreted to mean the Contracting Agency form(s) by which final payment is authorized, and final completion and acceptance granted.

Additive
A supplemental unit of work or group of bid items, identified separately in the Bid Proposal, which may, at the discretion of the Contracting Agency, be awarded in addition to the base bid.

Alternate
One of two or more units of work or groups of bid items, identified separately in the Bid Proposal, from which the Contracting Agency may make a choice between different methods or material of construction for performing the same work.

Business Day
A business day is any day from Monday through Friday except holidays as listed in Section 1-08.5.

Contract Bond
The definition in the Standard Specifications for “Contract Bond” applies to whatever bond form(s) are required by the Contract Documents, which may be a combination of a Payment Bond and a Performance Bond.

Contract Documents
See definition for “Contract”.

Contract Time
The period of time established by the terms and conditions of the Contract within which the Work must be physically completed.

Notice of Award
The written notice from the Contracting Agency to the successful Bidder signifying the Contracting Agency’s acceptance of the Bid Proposal.

Notice to Proceed
The written notice from the Contracting Agency or Engineer to the Contractor authorizing and directing the Contractor to proceed with the Work and establishing the date on which the Contract time begins.

Traffic
Both vehicular and non-vehicular traffic, such as pedestrians, bicyclists, wheelchairs, and equestrian traffic.

1-02 BID PROCEDURES AND CONDITIONS

(January 24, 2011 APWA GSP)

1-02.1 Prequalification of Bidders

Delete this Section and replace it with the following:

1-02.1 Qualifications of Bidder

Before award of a public works contract, a bidder must meet at least the minimum qualifications of RCW 39.04.350(1) to be considered a responsible bidder and qualified to be awarded a public works project.

(July 31, 2017 APWA GSP; requires pre-approval on FHWA funded projects, through WSDOT/Local Programs)

1-02.1(1) Supplemental Qualifications Criteria

Add the following new section:

In addition, the Contracting Agency has established Contracting Agency-specific and/or project-specific supplemental criteria, in accordance with RCW 39.04.350(3), for determining Bidder responsibility, including the basis for evaluation and the deadline for appealing a determination that a Bidder is not responsible. These criteria are contained in Section 1-02.14 Option C of these Special Provisions.

(******)

Bidders shall be qualified by experience, financing, equipment, and organization to do the work called for in the contract documents. The City reserves the right to take whatever action it deems necessary to ascertain the ability of the bidder to perform the work.

(1/1/2016 COK GSP)

Bidders shall complete and sign the Statement of Bidder's Qualification contained in the Proposal. Said form must be submitted with the bid proposal.

After bids are opened, Contracting Agency may request that a bidder or all bidders provide supplemental information concerning responsibility in accordance with RCW 39.04.350(2). Such supplemental information shall be provided to Contracting Agency in writing within two (2) business days of the request. Whether bidder supplies this supplemental information within the time and manner specified or not, in addition to consideration of this additional information, Contracting Agency may also base its determination of responsibility on any available information related to the supplemental criteria.

If Contracting Agency determines that a bidder is not responsible, Contracting Agency will provide, in writing, the reasons for such determination at which point the contractor will be deemed disqualified in accordance with WSDOT Standard Specification 1-02.14(10) and the proposal rejected. The bidder may appeal the determination within two (2) business days after receipt of the determination by presenting additional information to Contracting Agency. Contracting Agency will consider the additional information before issuing its final decision. If Contracting Agency's final decision affirms that the bidder is not responsible, Contracting Agency will not execute a contract with any other bidder until two (2) business days after the bidder determined to be not responsible has received Contracting Agency's final determination. The failure or omission of a bidder to receive or examine any form, instrument, addendum or other document shall in no way relieve any bidder from obligations with respect to the bid or to the contract.

Any bidder may, within five (5) business days before the bid submittal deadline, request that Contracting Agency modify the supplemental criteria. Contracting Agency will evaluate the information submitted by the bidder and respond before the submittal deadline. If the evaluation results in a change of the

criteria, the Contracting Agency will issue an Addendum to the bidding documents identifying the new criteria.

Supplemental Criteria. Contracting Agency acknowledges that Change Orders (changes, extra work, requests for equitable adjustment and claims (defined as including demands for money or time in excess of the contract amount or contract time)) are ubiquitous on public works construction projects. The expeditious resolution of Change Orders is critical to the on budget and on time successful completion of a public works project. Thus, the City has established the following relevant supplemental bidder responsibility criteria applicable for the project:

1. Criterion. The bidder must demonstrate a record of successful and timely resolution of Change Orders including compliance with public contract Change Order resolution procedures (e.g. timely notice of event giving rise to the Change Order, timely submission of a statement of the cost and/or impact of the Change Order unless the bidder is able to show extenuating circumstances that explain bidder's failure to timely provide such information to the satisfaction of Contracting Agency.

2. Documentation. As evidence that the bidder meets the supplemental responsibility criteria, after bids are opened and within two (2) business days of the public notice of Contracting Agency's tabulation of bids, the lowest responsive bidder must submit the following documentation of public works projects completed within the previous three (3) years and include for each project the following:

    a. The Owner and contact information for the Owner;

    b. A listing of Change Orders and a signed statement from the bidder that the project timelines concerning resolution of Change Orders was complied with, and if not, provide a written explanation of what the bidder believes to be the extenuating circumstances excusing compliance with the Contract Change Order notice and claim provisions.

Contracting Agency may contact owners listed by the bidders to validate the information provided by a bidder.

(******)

Supplemental Criteria. The bidder must have relevant prior experience.

1. Criterion. The bidder must have relevant experience during the past ten (10) years successfully completing public works projects similar in size and complexity to work called for in the Contract Documents. The Contractor's Superintendent and Project Manager must also have experience within the past ten (10) years successfully managing projects to completion that are similar in size and complexity to the work called for in the Contract Documents. Contractor experience shall be demonstrated by completing the Statement of Bidder's Qualifications in the proposal. Criterion, documentation, and requirements in Previous Experience section to extend to the following subcontractors (if utilized):

    a. Concrete

    b. Landscape

    c. Any subcontractor to perform 10% or more of the total contract

2. Documentation. As evidence that the bidder meets the supplemental responsibility criteria, after bids are opened and within two (2) business days of the public notice of Contracting Agency's tabulation of bids, the Contracting Agency may request that the lowest responsive bidder submit documentation to supplement the Statement of Bidder's Qualifications in the proposal. The supplemental information that may be requested by the Contracting Agency includes the following:

a. Additional information on the representative projects listed in the Statement of Bidder's Qualifications in the proposal that demonstrates experience with public works construction contracts similar in size and complexity to the work called for in these Contract Documents that the bidder has completed within the past five (5) years.

b. During the past ten (10) years, the bidder shall have successfully completed at least one public works project meeting each of the scope elements below. The bidder may submit multiple projects demonstrating individual elements so long as the sum of the projects demonstrates all of the elements listed. The projects identified to demonstrate experience with each element must contain scope for that element similar to or larger than the scale of work required in these Contract Documents. The required scope elements are as follows:

   i. Final contract amount in excess of $500,000

   ii. Public park project adjacent to Lake Washington

   iii. Marine construction, bulkheads, and piers

c. Experience of Superintendent. Submit a resume and references for the person proposed by the Bidder to be the superintendent for the work. Resume and references must demonstrate that the Superintendent has managed public works projects of similar size and complexity and successfully completed projects within the last five (5) years.

d. Experience of the Project Manager. Submit a resume and references for the person proposed by the Bidder to manage the work. Resume and references must demonstrate that the Project Manager has managed public works projects of similar size and complexity and successfully completed projects within the last five (5) years.

(June 27, 2011 APWA GSP)

1-02.2 Plans and Specifications

Delete this section and replace it with the following:

Information as to where Bid Documents can be obtained or reviewed can be found in the Call for Bids (Invitation for Bids) for the work.

After award of the contract, plans and specifications will be issued to the Contractor at no cost as detailed below:

To Prime Contractor	No. of Sets	Basis of Distribution
Reduced plans (11" x 17")	3	Furnished automatically upon award.
Contract Provisions	3	Furnished automatically upon award.
Large plans (e.g., 22" x 34")	1	Furnished only upon request.

Additional plans and Contract Provisions may be obtained by the Contractor from the source stated in the Call for Bids, at the Contractor's own expense.

(August 15, 2016 APWA GSP)

1-02.4(1) General

The first sentence of the last paragraph is revised to read:

> Any prospective Bidder desiring an explanation or interpretation of the Bid Documents, must request the explanation or interpretation in writing soon enough to allow a written reply to reach all prospective Bidders before the submission of their Bids.

((March 8, 2013 APWA GSP)

1-02.4(2) Subsurface Information

The second sentence in the first paragraph is revised to read:

> The Summary of Geotechnical Conditions and the boring logs, if and when included as an appendix to the Special Provisions, shall be considered as part of the Contract.

(July 31, 2017 APWA GSP)

1-02.5 Proposal Forms

Delete this section and replace it with the following:

> The Proposal Form will identify the project and its location and describe the work. It will also list estimated quantities, units of measurement, the items of work, and the materials to be furnished at the unit bid prices. The bidder shall complete spaces on the proposal form that call for, but are not limited to, unit prices; extensions; summations; the total bid amount; signatures; date; and, where applicable, retail sales taxes and acknowledgment of addenda; the bidder's name, address, telephone number, and signature; the bidder's UDBE/DBE/M/WBE commitment, if applicable; a State of Washington Contractor's Registration Number; and a Business License Number, if applicable. Bids shall be completed by typing or shall be printed in ink by hand, preferably in black ink. The required certifications are included as part of the Proposal Form.
>
> The Contracting Agency reserves the right to arrange the proposal forms with alternates and additives, if such be to the advantage of the Contracting Agency. The bidder shall bid on all alternates and additives set forth in the Proposal Form unless otherwise specified.

(July 11, 2018 APWA GSP)

1-02.6 Preparation of Proposal

Supplement the second paragraph with the following:

4. If a minimum bid amount has been established for any item, the unit or lump sum price must equal or exceed the minimum amount stated.

5. Any correction to a bid made by interlineation, alteration, or erasure, shall be initialed by the signer of the bid.

Delete the last two paragraphs, and replace them with the following:

> If no Subcontractor is listed, the Bidder acknowledges that it does not intend to use any Subcontractor to perform those items of work.
>
> The Bidder shall submit with their Bid a completed Contractor Certification Wage Law Compliance form, provided by the Contracting Agency. Failure to return this certification as part of the Bid Proposal package will make this Bid Nonresponsive and ineligible for Award. A Contractor Certification of Wage Law Compliance form is included in the Proposal Forms.

The Bidder shall make no stipulation on the Bid Form, nor qualify the bid in any manner.

A bid by a corporation shall be executed in the corporate name, by the president or a vice president (or other corporate officer accompanied by evidence of authority to sign).

A bid by a partnership shall be executed in the partnership name, and signed by a partner. A copy of the partnership agreement shall be submitted with the Bid Form if any UDBE requirements are to be satisfied through such an agreement.

A bid by a joint venture shall be executed in the joint venture name and signed by a member of the joint venture. A copy of the joint venture agreement shall be submitted with the Bid Form if any UDBE requirements are to be satisfied through such an agreement.

(March 8, 2013 APWA GSP)

1-02.7 Bid Deposit

Supplement this section with the following:

Bid bonds shall contain the following:

1. Contracting Agency-assigned number for the project;
2. Name of the project;
3. The Contracting Agency named as obligee;
4. The amount of the bid bond stated either as a dollar figure or as a percentage which represents five percent of the maximum bid amount that could be awarded;
5. Signature of the bidder's officer empowered to sign official statements. The signature of the person authorized to submit the bid should agree with the signature on the bond, and the title of the person must accompany the said signature;
6. The signature of the surety's officer empowered to sign the bond and the power of attorney.

If so stated in the Contract Provisions, bidder must use the bond form included in the Contract Provisions.

If so stated in the Contract Provisions, cash will not be accepted for a bid deposit.

(1/1/2016 COK GSP)

1-02.8 Noncollusion Declaration and Lobbying Certification

The following new paragraph is inserted at the end of Section 1-02.8:

Conflict of Interest

The bidder affirms that it presently has no interest and shall not acquire any interest, direct or indirect, which would conflict in any manner or degree with the performance of its services hereunder. The Contractor further covenants that in the performance of this contract, no person having any conflicting interest shall be employed. Any interest on the part of the Contractor or its employees must be disclosed forthwith to the City of Kirkland. If this contract is within the scope of a Federal Housing and Community Development Block Grant program, the Contractor further covenants that no person who presently exercises any functions or responsibilities in connection with the block grant program has any personal financial interest, direct or indirect, in this contract.

(May 17, 2018 APWA GSP)

1-02.9 Delivery of Proposal

Delete this section and replace it with the following:

Each Proposal shall be submitted in a sealed envelope, with the Project Name and Project Number as stated in the Invitation for Bids clearly marked on the outside of the envelope, or as otherwise required in the Bid Documents, to ensure proper handling and delivery.

To be considered responsive on a FHWA-funded project, the Bidder may be required to submit the following items, as required by Section 1-02.6:

- UDBE Written Confirmation Document from each UDBE firm listed on the Bidder's completed UDBE Utilization Certification (WSDOT 272-056U)
- Good Faith Effort (GFE) Documentation

These documents, if applicable, shall be received either with the Bid Proposal or as a supplement to the Bid. These documents shall be received **no later than 24 hours** (not including Saturdays, Sundays and Holidays) after the time for delivery of the Bid Proposal.

If submitted after the Bid Proposal is due, the document(s) must be submitted in a sealed envelope labeled the same as for the Proposal, with "Supplemental Information" added. All other information required to be submitted with the Bid Proposal must be submitted with the Bid Proposal itself, at the time stated in the Call for Bids.

The Contracting Agency will not open or consider any Bid Proposal that is received after the time specified in the Invitation for Bids for receipt of Bid Proposals, or received in a location other than that specified in the Invitation for Bids. The Contracting Agency will not open or consider any "Supplemental Information" (UDBE confirmations, or GFE documentation) that is received after the time specified above, or received in a location other than that specified in the Invitation for Bids.

(July 23, 2015 APWA GSP)

1-02.10 Withdrawing, Revising, or Supplementing Proposal

Delete this section, and replace it with the following:

After submitting a physical Bid Proposal to the Contracting Agency, the Bidder may withdraw, revise, or supplement it if:

1. The Bidder submits a written request signed by an authorized person and physically delivers it to the place designated for receipt of Bid Proposals, and

2. The Contracting Agency receives the request before the time set for receipt of Bid Proposals, and

3. The revised or supplemented Bid Proposal (if any) is received by the Contracting Agency before the time set for receipt of Bid Proposals.

If the Bidder's request to withdraw, revise, or supplement its Bid Proposal is received before the time set for receipt of Bid Proposals, the Contracting Agency will return the unopened Proposal package to the Bidder. The Bidder must then submit the revised or supplemented package in its entirety. If the Bidder does not submit a revised or supplemented package, then its bid shall be considered withdrawn.

Late revised or supplemented Bid Proposals or late withdrawal requests will be date recorded by the Contracting Agency and returned unopened. Mailed, emailed, or faxed requests to withdraw, revise, or supplement a Bid Proposal are not acceptable.

(June 20, 2017 APWA GSP)

1-02.13 Irregular Proposals

Delete this section and replace it with the following:

1. A Proposal will be considered irregular and will be rejected if:

    a. The Bidder is not prequalified when so required;

    b. The authorized Proposal form furnished by the Contracting Agency is not used or is altered;

    c. The completed Proposal form contains any unauthorized additions, deletions, alternate Bids, or conditions;

    d. The Bidder adds provisions reserving the right to reject or accept the award, or enter into the Contract;

    e. A price per unit cannot be determined from the Bid Proposal;

    f. The Proposal form is not properly executed;

    g. The Bidder fails to submit or properly complete a Subcontractor list, if applicable, as required in Section 1-02.6;

    h. The Bidder fails to submit or properly complete an Underutilized Disadvantaged Business Enterprise Certification, if applicable, as required in Section 1-02.6;

    i. The Bidder fails to submit written confirmation from each UDBE firm listed on the Bidder's completed UDBE Utilization Certification that they are in agreement with the bidder's UDBE participation commitment, if applicable, as required in Section 1-02.6, or if the written confirmation that is submitted fails to meet the requirements of the Special Provisions;

    j. The Bidder fails to submit UDBE Good Faith Effort documentation, if applicable, as required in Section 1-02.6, or if the documentation that is submitted fails to demonstrate that a Good Faith Effort to meet the Condition of Award was made;

k. The Bid Proposal does not constitute a definite and unqualified offer to meet the material terms of the Bid invitation; or

l. More than one Proposal is submitted for the same project from a Bidder under the same or different names.

2. A Proposal may be considered irregular and may be rejected if:

a. The Proposal does not include a unit price for every bid item;

b. Any of the unit prices are excessively unbalanced (either above or below the amount of a reasonable Bid) to the potential detriment of the Contracting Agency;

c. Receipt of Addenda is not acknowledged;

d. A member of a joint venture or partnership and the joint venture or partnership submit Proposals for the same project (in such an instance, both Bids may be rejected); or

e. If Proposal form entries are not made in ink.

(May 17, 2018 APWA GSP)

1-02.14 Disqualification of Bidders

Delete this section and replace it with the following:

A Bidder will be deemed not responsible if the Bidder does not meet the mandatory bidder responsibility criteria in RCW 39.04.350(1), as amended; or does not meet Supplemental Criteria 1-7 listed in this Section.

The Contracting Agency will verify that the Bidder meets the mandatory bidder responsibility criteria in RCW 39.04.350(1), and Supplemental Criteria 1-2. Evidence that the Bidder meets Supplemental Criteria 3-7 shall be provided by the Bidder as stated later in this Section.

1. Delinquent State Taxes

a. Criterion: The Bidder shall not owe delinquent taxes to the Washington State Department of Revenue without a payment plan approved by the Department of Revenue.

b. Documentation: The Bidder, if and when required as detailed below, shall sign a statement (on a form to be provided by the Contracting Agency) that the Bidder does not owe delinquent taxes to the Washington State Department of Revenue, or if delinquent taxes are owed to the Washington State Department of Revenue, the Bidder must submit a written payment plan approved by the Department of Revenue, to the Contracting Agency by the deadline listed below.

2. Federal Debarment

a. Criterion: The Bidder shall not currently be debarred or suspended by the Federal government.

b. Documentation: The Bidder shall not be listed as having an “active exclusion” on the U.S. government’s “System for Award Management” database (www.sam.gov).

3. Subcontractor Responsibility

a. Criterion: The Bidder's standard subcontract form shall include the subcontractor responsibility language required by RCW 39.06.020, and the Bidder shall have an established procedure which it utilizes to validate the responsibility of each of its subcontractors. The Bidder's subcontract form shall also include a requirement that each of its subcontractors shall have and document a similar procedure to determine whether the sub-tier subcontractors with whom it contracts are also "responsible" subcontractors as defined by RCW 39.06.020.

b. Documentation: The Bidder, if and when required as detailed below, shall submit a copy of its standard subcontract form for review by the Contracting Agency, and a written description of its procedure for validating the responsibility of subcontractors with which it contracts.

4. Claims Against Retainage and Bonds

a. Criterion: The Bidder shall not have a record of excessive claims filed against the retainage or payment bonds for public works projects in the three years prior to the bid submittal date, that demonstrate a lack of effective management by the Bidder of making timely and appropriate payments to its subcontractors, suppliers, and workers, unless there are extenuating circumstances and such circumstances are deemed acceptable to the Contracting Agency.

b. Documentation: The Bidder, if and when required as detailed below, shall submit a list of the public works projects completed in the three years prior to the bid submittal date that have had claims against retainage and bonds and include for each project the following information:

- Name of project
- The owner and contact information for the owner;
- A list of claims filed against the retainage and/or payment bond for any of the projects listed;
- A written explanation of the circumstances surrounding each claim and the ultimate resolution of the claim.

5. Public Bidding Crime

a. Criterion: The Bidder and/or its owners shall not have been convicted of a crime involving bidding on a public works contract in the five years prior to the bid submittal date.

b. Documentation: The Bidder, if and when required as detailed below, shall sign a statement (on a form to be provided by the Contracting Agency) that the Bidder and/or its owners have not been convicted of a crime involving bidding on a public works contract.

6. Termination for Cause / Termination for Default

a. Criterion: The Bidder shall not have had any public works contract terminated for cause or terminated for default by a government agency in the five years prior to the bid submittal date, unless there are extenuating circumstances and such circumstances are deemed acceptable to the Contracting Agency.

b. Documentation: The Bidder, if and when required as detailed below, shall sign a statement (on a form to be provided by the Contracting Agency) that the Bidder has not had any public works contract terminated for cause or terminated for default by a government agency in

the five years prior to the bid submittal date; or if Bidder was terminated, describe the circumstances. .

7. Lawsuits

a. Criterion: The Bidder shall not have lawsuits with judgments entered against the Bidder in the five years prior to the bid submittal date that demonstrate a pattern of failing to meet the terms of contracts, unless there are extenuating circumstances and such circumstances are deemed acceptable to the Contracting Agency

b. Documentation: The Bidder, if and when required as detailed below, shall sign a statement (on a form to be provided by the Contracting Agency) that the Bidder has not had any lawsuits with judgments entered against the Bidder in the five years prior to the bid submittal date that demonstrate a pattern of failing to meet the terms of contracts, or shall submit a list of all lawsuits with judgments entered against the Bidder in the five years prior to the bid submittal date, along with a written explanation of the circumstances surrounding each such lawsuit. The Contracting Agency shall evaluate these explanations to determine whether the lawsuits demonstrate a pattern of failing to meet of terms of construction related contracts

As evidence that the Bidder meets the Supplemental Criteria stated above, the apparent low Bidder must submit to the Contracting Agency by 12:00 P.M. (noon) of the second business day following the bid submittal deadline, a written statement verifying that the Bidder meets the supplemental criteria together with supporting documentation (sufficient in the sole judgment of the Contracting Agency) demonstrating compliance with the Supplemental Criteria. The Contracting Agency reserves the right to request further documentation as needed from the low Bidder and documentation from other Bidders as well to assess Bidder responsibility and compliance with all bidder responsibility criteria. The Contracting Agency also reserves the right to obtain information from third-parties and independent sources of information concerning a Bidder's compliance with the mandatory and supplemental criteria, and to use that information in their evaluation. The Contracting Agency may consider mitigating factors in determining whether the Bidder complies with the requirements of the supplemental criteria.

The basis for evaluation of Bidder compliance with these mandatory and supplemental criteria shall include any documents or facts obtained by Contracting Agency (whether from the Bidder or third parties) including but not limited to: (i) financial, historical, or operational data from the Bidder; (ii) information obtained directly by the Contracting Agency from others for whom the Bidder has worked, or other public agencies or private enterprises; and (iii) any additional information obtained by the Contracting Agency which is believed to be relevant to the matter.

If the Contracting Agency determines the Bidder does not meet the bidder responsibility criteria above and is therefore not a responsible Bidder, the Contracting Agency shall notify the Bidder in writing, with the reasons for its determination. If the Bidder disagrees with this determination, it may appeal the determination within two (2) business days of the Contracting Agency's determination by presenting its appeal and any additional information to the Contracting Agency. The Contracting Agency will consider the appeal and any additional information before issuing its final determination. If the final determination affirms that the Bidder is not responsible, the Contracting Agency will not execute a contract with any other Bidder until at least two business days after the Bidder determined to be not responsible has received the Contracting Agency's final determination.

Request to Change Supplemental Bidder Responsibility Criteria Prior To Bid: Bidders with concerns about the relevancy or restrictiveness of the Supplemental Bidder Responsibility Criteria may make or submit requests to the Contracting Agency to modify the criteria. Such requests shall be in writing, describe the nature of the concerns, and propose specific modifications to the criteria. Bidders shall submit such requests to the Contracting Agency no later than five (5) business days prior to the bid submittal deadline and address the request to the Project Engineer or such other person designated by the Contracting Agency in the Bid Documents.

(August 14, 2013 APWA GSP)

1-02.15 Pre Award Information

Revise this section to read:

Before awarding any contract, the Contracting Agency may require one or more of these items or actions of the apparent lowest responsible bidder:

1. A complete statement of the origin, composition, and manufacture of any or all materials to be used,
2. Samples of these materials for quality and fitness tests,
3. A progress schedule (in a form the Contracting Agency requires) showing the order of and time required for the various phases of the work,
4. A breakdown of costs assigned to any bid item,
5. Attendance at a conference with the Engineer or representatives of the Engineer,
6. Obtain, and furnish a copy of, a business license to do business in the city or county where the work is located.
7. Any other information or action taken that is deemed necessary to ensure that the bidder is the lowest responsible bidder.

1-03 AWARD AND EXECUTION OF CONTRACT

(January 23, 2006 APWA GSP)

1-03.1 Consideration of Bids

Revise the first paragraph to read:

After opening and reading proposals, the Contracting Agency will check them for correctness of extensions of the prices per unit and the total price. If a discrepancy exists between the price per unit and the extended amount of any bid item, the price per unit will control. If a minimum bid amount has been established for any item and the bidder's unit or lump sum price is less than the minimum specified amount, the Contracting Agency will unilaterally revise the unit or lump sum price, to the minimum specified amount and recalculate the extension. The total of extensions, corrected where necessary, including sales taxes where applicable and such additives and/or alternates as selected by the Contracting Agency, will be used by the Contracting Agency for award purposes and to fix the Awarded Contract Price amount and the amount of the contract bond.

1-03.2 Award of Contract

This section is supplemented with the following:

The award of contract will be made to the lowest bidder deemed responsible by the City, and whose bid conforms to the requirements of these specifications, and whose past record of performance on work of similar complexity and magnitude indicates that said bidder is qualified to carry out the obligations of the contract and to complete the work contemplated therein.

The bidder shall submit price on each and every item of work included in the base bid and alternative bid.

The contractor shall be awarded to the lowest responsible bidder based on the base bid. Subject to funding and the best interests of the City, the City may elect to award the additive scheduled together with the base bid.

(October 1, 2005 APWA GSP)

1-03.3 Execution of Contract

Revise this section to read:

Copies of the Contract Provisions, including the unsigned Form of Contract, will be available for signature by the successful bidder on the first business day following award. The number of copies to be executed by the Contractor will be determined by the Contracting Agency.

Within ten (10) calendar days after the award date, the successful bidder shall return the signed Contracting Agency-prepared contract, an insurance certification as required by Section 1-07.18, and a satisfactory bond as required by law and Section 1-03.4. Before execution of the contract by the Contracting Agency, the successful bidder shall provide any pre-award information the Contracting Agency may require under Section 1-02.15.

Until the Contracting Agency executes a contract, no proposal shall bind the Contracting Agency nor shall any work begin within the project limits or within Contracting Agency-furnished sites. The Contractor shall bear all risks for any work begun outside such areas and for any materials ordered before the contract is executed by the Contracting Agency.

If the bidder experiences circumstances beyond their control that prevents return of the contract documents within 10 calendar days after the award date stated above, the Contracting Agency may grant up to a maximum of 10 additional calendar days for return of the documents, provided the Contracting Agency deems the circumstances warrant it.

(1/1/2016 COK GSP)

1-03.4 Contract Bond

Revise the first paragraph to read:

The successful bidder shall provide executed payment and performance bond(s) for the full contract amount. Separate payment and performance bonds are required and each shall be for the full contract amount. The bond(s) shall:

1. Be on Contracting Agency-furnished form(s);
2. Be signed by an approved surety (or sureties) that:
   a. Is registered with the Washington State Insurance Commissioner, and
   b. Appears on the current Authorized Insurance List in the State of Washington published by the Office of the Insurance Commissioner, and
   c. Have an A.M. best rating of A:VII or better.
3. Guarantee that the Contractor will perform and comply with all obligations, duties, and conditions under the Contract, including but not limited to the duty and obligation to indemnify, defend, and protect the Contracting Agency against all losses and claims related directly or indirectly from any failure:
   a. Of the Contractor (or any of the employees, subcontractors, or lower tier subcontractors of the Contractor) to faithfully perform and comply with all contract obligations, conditions, and duties, or

b. Of the Contractor (or the subcontractors or lower tier subcontractors of the Contractor) to pay all laborers, mechanics, subcontractors, lower tier subcontractors, material person, or any other person who provides supplies or provisions for carrying out the work;

4. Be conditioned upon the payment of taxes, increases, and penalties incurred on the project under titles 50, 51, and 82 RCW; and

5. Be accompanied by a power of attorney for the Surety's officer empowered to sign the bond; and

6. Be signed by an officer of the Contractor empowered to sign official statements (sole proprietor or partner). If the Contractor is a corporation, the bond(s) must be signed by the president or vice president, unless accompanied by written proof of the authority of the individual signing the bond(s) to bind the corporation (i.e., corporate resolution, power of attorney, or a letter to such effect signed by the president or vice president).

(November 30, 2018 APWA GSP)

1-03.7 Judicial Review

Revise this section to read:

Any decision made by the Contracting Agency regarding the Award and execution of the Contract or Bid rejection shall be conclusive subject to the scope of judicial review permitted under Washington Law. Such review, if any, shall be timely filed in the Superior Court of <u>the county where the Contracting Agency headquarters is located, provided that where an action is asserted against a county, RCW 36.01.050 shall control venue and jurisdiction</u>.

1-04 SCOPE OF THE WORK

(1/1/2016 COK GSP)

1-04.1 Intent of the Contract

Section 1-04.1 is supplemented with the following:

All materials, tools, labor, and guarantees thereof of required to complete the work shall be furnished and supplied in accordance with the Plans, these Special Provisions, the Standard Specifications, and City of Kirkland Pre-Approved (Standard) Plans and Policies. The Contractor shall include all costs of doing this work within the contract bid item prices.

(March 13, 2012 APWA GSP)

1-04.2 Coordination of Contract Documents, Plans, Special Provisions, Specifications, and Addenda

Revise the second paragraph to read:

Any inconsistency in the parts of the contract shall be resolved by following this order of precedence (e.g., 1 presiding over 2, 2 over 3, 3 over 4, and so forth):

1. Addenda,

2. Proposal Form,

3. Special Provisions,

4. Contract Plans,

5. Amendments to the WSDOT 2021 Standard Specifications,
6. WSDOT 2021 Standard Specifications,
7. Contracting Agency's Standard Plans, or Details (if any),
8. Contracting Agency's Standard Policies, and
9. WSDOT Standard Plans for Road, Bridge, and Municipal Construction.

1-04.4(1) Minor Changes

Supplement this section with the following:

(******)

Bid Item 2 "Minor Changes"	Force Account

To provide a common basis for all bidding, the Owner has established in the proposal a dollar value for all items to be paid by force account. All such items are to become a part of the Contractor's total bid. However, the Owner does not warrant expressly or by implication that the actual amount of work will correspond with these estimates. Payment will be made on the basis of the amount of work actually authorized by the Owner.

(July 23, 2015 APWA GSP)

1-04.6 Variation in Estimated Quantities

Revise the first paragraph to read:

Payment to the Contractor will be made only for the actual quantities of Work performed and accepted in conformance with the Contract. When the accepted quantity of Work performed under a unit item varies from the original Proposal quantity, payment will be at the unit Contract price for all Work unless the total accepted quantity of any Contract item, adjusted to exclude added or deleted amounts included in change orders accepted by both parties, increases or decreases by more than 25 percent from the original Proposal quantity, and if the total extended bid price for that item at time of award is equal to or greater than 10 percent of the total contract price at time of award. In that case, payment for contract work may be adjusted as described herein:

(1/1/2016 COK GSP)

1-04.11 Final Cleanup

Section 1-04.11 is deleted in its entirety and replaced with the following:

From time to time or as may be ordered by the Engineer, the Contractor shall cleanup and remove debris, refuse, and discarded materials of any kind resulting from the Work. Failure to do so may result in cleanup done by the Owner and the cost thereof charged to the Contractor and deducted from the Contractor's progress estimate.

The Contractor shall perform final cleanup as provided in this Section. The Engineer will not establish the Physical Completion Date until this is done. All public and private property the Contractor occupied to do the Work, including but not limited to the Street Right of Way, material sites, borrow and waste sites, and construction staging area shall be left neat and presentable. Immediately after completion of the Work, the Contractor shall cleanup and remove all refuse and unused materials of any kind resulting

from the Work. Failure to do the final cleanup may result in the final cleanup being done by the Owner and the cost thereof charged to the Contractor and deducted from the Contractor's final progress estimate.

The Contractor shall:

1. Remove all rubbish, surplus materials, discarded materials, falsework, piling, camp buildings, temporary structures, equipment, and debris;

2. Remove from the Project, all unneeded, oversized rock left from grading, surfacing, or paving unless the Contract specifies otherwise or the Engineer approves otherwise;

3. On all concrete and asphalt pavement work, flush the pavement clean and remove the wash water and debris;

4. Sweep and flush structure decks and remove wash water and debris;

5. Clean out from all open culverts and drains, inlets, catch basins, manholes and water main valve chambers, within the limits of the Project Site, all dirt and debris of any kind that is the result of the Contractor's operations;

6. Level and fine grade all excavated material not used for backfill where the Contract requires;

7. Fine grade all slopes;

8. Upon completion of grading and cleanup operations at any privately-owned site for which a written agreement between the Contractor and property owner is required, the Contractor shall obtain and furnish to the Engineer a written release from all damages, duly executed by the property owner, stating that the restoration of the property has been satisfactorily accomplished.;

All costs associated with cleanup shall be incidental to the Work and shall be included in the various bid items in the Bid, and shall be at no additional cost to the Owner.

1-05 CONTROL OF WORK

1-05.4 Conformity with and Deviations from Plans and Stakes

Add the following two new sub-sections:

(1/1/2016 COK GSP)

1-05.4(1) Roadway and Utility Surveys

The Contractor shall be responsible for setting, maintaining, and resetting all alignment stakes, slope stakes, and grades necessary for the construction of the improvements under this contract. Except for the survey control data furnished by the Owner, calculations, surveying, and measuring required for setting and maintaining the necessary lines and grades shall be the Contractor's responsibility.

The Owner may spot-check the Contractor's surveying. These spot-checks will not change the requirements for normal checking by the Contractor.

To facilitate the establishment of lines and elevations, the Owner will provide the Contractor with primary survey control information consisting of descriptions of two primary control points used for the horizontal and vertical control. Primary control points will be described and shown on the right-of-way Plans. The Contractor shall check all control points for horizontal and vertical locations prior to use and

report any discrepancy to the Engineer. Errors resulting from using control points which have not been verified, shall be the Contractors responsibility.

At a minimum the Contractor shall provide following survey staking shall be required:

1. Construction centerline or an offset to construction centerline shall be staked at all angle points and 100-foot intervals on tangents.

2. Offset stakes of JUT Centerline at all angle points and at 50-foot intervals on tangents

    a. Cut/fill shall reference the elevations of the lowest conduit.

    b. Offset shall reference the location of the center of trench and list the width of the trench section.

3. Offset stakes of all structure control/location points shown on the undergrounding Plans.

    a. Each vault, handhold, and junction box shall have a sets of off-set points provided each location point shown in the location tables Cut/Fill shall reference elevations of the finish grade of the top lid of the structure.

    b. Each pole riser and stub up, shall have at least one set of off-set hubs provided with cut/fills to finish ground elevations.

    c. Finish grade elevations of all structures shall be determined by the Contractor based on the typical sections and details provide on the Contract Drawings.

4. Offset stakes at face or walls.

5. Offset staking of all drainage structures and drainage pipes at 50-foot intervals.

6. Location of all right-of-way and easements adjacent to the work area as shown on the right-of-way Plans.

7. Offset of all permanent concrete sidewalks, curb ramps, and driveways.

Each stake shall have the following information: Hub elevation, offset distance to items being staked, cut/fill to proposed elevations, design elevation of items being staked.

The above information shall also be shown on a written Cut Sheet and provided to the City inspector 48-hours prior to installation of the items being staked.

The Contractor shall establish all secondary survey controls, both horizontal and vertical, as necessary to assure proper placement of all project elements based on the primary control points provided by the Engineer. Survey work shall be within the following tolerances:

Stationing	+.01 foot
Alignment	+.01 foot (between successive points)
Superstructure Elevations	+.01 foot (from plan elevations)
Substructure Elevations	+.05 foot (from plan elevations)
Sidewalk and Curb Ramp Elevations	+.01 foot (from plan elevations)

During the progress of the work, the Contractor shall make available to the Engineer all field books including survey information, footing elevations, cross sections and quantities.

The Contractor shall be fully responsible for the close coordination of field locations and measurements with appropriate dimensions of structural members being fabricated.

(July 23, 2015 APWA GSP)

1-05.4(2) Bridge and Structure Surveys

For all structural work such as bridges and retaining walls, the Contractor shall retain as a part of Contractor's organization an experienced team of surveyors.

The Contractor shall provide all surveys required to complete the structure, except the following primary survey control which will be provided by the Engineer:

1. Centerline or offsets to centerline of the structure.
2. Stations of abutments and pier centerlines.
3. A sufficient number of bench marks for levels to enable the Contractor to set grades at reasonably short distances.
4. Monuments and control points as shown in the Plans.

The Contractor shall establish all secondary survey controls, both horizontal and vertical, as necessary to assure proper placement of all project elements based on the primary control points provided by the Engineer. Survey work shall be within the following tolerances:

Stationing	± 0.01 foot
Alignment	± 0.01 foot (between successive points)
Superstructure Elevations	± 0.01 foot (from plan elevations)
Substructure Elevations	± 0.05 foot (from plan elevations)

During the progress of the work, the Contractor shall make available to the Engineer all field books including survey information, footing elevations, cross sections and quantities.

The Contractor shall be fully responsible for the close coordination of field locations and measurements with appropriate dimensions of structural members being fabricated.

(1/1/2016 COK GSP)

Measurement

No unit of measurement shall apply to the lump sum price for construction surveying.

Payment

Payment will be made in accordance with Section 1-04.1 of these Specifications for the following bid item:

Bid Item 4 "Construction Surveying"	Lump Sum

The lump sum Contract price for "Construction Surveying" shall be full payment for furnishing all materials, tools, labor, and equipment needed to perform the Work specified, including any resurveying, checking, correction of errors, replacement of missing or damaged stakes, and coordination efforts.

(October 1, 2005 APWA GSP)

1-05.7 Removal of Defective and Unauthorized Work

Supplement this section with the following:

If the Contractor fails to remedy defective or unauthorized work within the time specified in a written notice from the Engineer, or fails to perform any part of the work required by the Contract Documents, the Engineer may correct and remedy such work as may be identified in the written notice, with Contracting Agency forces or by such other means as the Contracting Agency may deem necessary.

If the Contractor fails to comply with a written order to remedy what the Engineer determines to be an emergency situation, the Engineer may have the defective and unauthorized work corrected immediately, have the rejected work removed and replaced, or have work the Contractor refuses to perform completed by using Contracting Agency or other forces. An emergency situation is any situation when, in the opinion of the Engineer, a delay in its remedy could be potentially unsafe, or might cause serious risk of loss or damage to the public.

Direct or indirect costs incurred by the Contracting Agency attributable to correcting and remedying defective or unauthorized work, or work the Contractor failed or refused to perform, shall be paid by the Contractor. Payment will be deducted by the Engineer from monies due, or to become due, the Contractor. Such direct and indirect costs shall include in particular, but without limitation, compensation for additional professional services required, and costs for repair and replacement of work of others destroyed or damaged by correction, removal, or replacement of the Contractor's unauthorized work.

No adjustment in contract time or compensation will be allowed because of the delay in the performance of the work attributable to the exercise of the Contracting Agency's rights provided by this Section.

The rights exercised under the provisions of this section shall not diminish the Contracting Agency's right to pursue any other avenue for additional remedy or damages with respect to the Contractor's failure to perform the work as required.

(1/1/2016 COK GSP)

1-05.9 Equipment

The following new paragraph is inserted between the second and third paragraphs:

Use of equipment with metal tracks will not be permitted on concrete or asphalt surfaces unless otherwise authorized by the Engineer.

(1/1/2016 COK GSP)

1-05.10 Guarantees

Section 1-05.10 is supplemented as follows:

Guarantees and maintenance bonds shall be in accordance with City of Kirkland, State of Washington, Public Works Performance and Payment Bond forms and requirements. The performance bond shall be in the full amount of contract. The Contractor guarantees all items of material, equipment, and workmanship against mechanical, structural, or other defects for which the Contractor is responsible that may develop or become evident within a period of one year from and after acceptance of the work by the Owner. This guarantee shall be understood to require prompt remedy of defects upon written

notification to the Contractor. If the Owner determines the defect requires immediate repair, the Owner may, without further notice to the Contractor, make the necessary corrections, the cost of which shall be borne by the Contractor. To support the above guarantee, the Contractor's performance bond shall remain in full force and effect for one year following the acceptance of the project by the Owner.

(October 1, 2005 APWA GSP)

1-05.11 Final Inspection

Delete this section and replace it with the following:

1-05.11 Final Inspections and Operational Testing

1-05.11(1) Substantial Completion Date

When the Contractor considers the work to be substantially complete, the Contractor shall so notify the Engineer and request the Engineer establish the Substantial Completion Date. The Contractor's request shall list the specific items of work that remain to be completed in order to reach physical completion. The Engineer will schedule an inspection of the work with the Contractor to determine the status of completion. The Engineer may also establish the Substantial Completion Date unilaterally.

If, after this inspection, the Engineer concurs with the Contractor that the work is substantially complete and ready for its intended use, the Engineer, by written notice to the Contractor, will set the Substantial Completion Date. If, after this inspection the Engineer does not consider the work substantially complete and ready for its intended use, the Engineer will, by written notice, so notify the Contractor giving the reasons therefor.

Upon receipt of written notice concurring in or denying substantial completion, whichever is applicable, the Contractor shall pursue vigorously, diligently and without unauthorized interruption, the work necessary to reach Substantial and Physical Completion. The Contractor shall provide the Engineer with a revised schedule indicating when the Contractor expects to reach substantial and physical completion of the work.

The above process shall be repeated until the Engineer establishes the Substantial Completion Date and the Contractor considers the work physically complete and ready for final inspection.

1-05.11(2) Final Inspection and Physical Completion Date

When the Contractor considers the work physically complete and ready for final inspection, the Contractor by written notice, shall request the Engineer to schedule a final inspection. The Engineer will set a date for final inspection. The Engineer and the Contractor will then make a final inspection and the Engineer will notify the Contractor in writing of all particulars in which the final inspection reveals the work incomplete or unacceptable. The Contractor shall immediately take such corrective measures as are necessary to remedy the listed deficiencies. Corrective work shall be pursued vigorously, diligently, and without interruption until physical completion of the listed deficiencies. This process will continue until the Engineer is satisfied the listed deficiencies have been corrected.

If action to correct the listed deficiencies is not initiated within 7 days after receipt of the written notice listing the deficiencies, the Engineer may, upon written notice to the Contractor, take whatever steps are necessary to correct those deficiencies pursuant to Section 1-05.7.

The Contractor will not be allowed an extension of contract time because of a delay in the performance of the work attributable to the exercise of the Engineer's right hereunder.

Upon correction of all deficiencies, the Engineer will notify the Contractor and the Contracting Agency, in writing, of the date upon which the work was considered physically complete. That date shall

constitute the Physical Completion Date of the contract, but shall not imply acceptance of the work or that all the obligations of the Contractor under the contract have been fulfilled.

1-05.11(3) Operational Testing

It is the intent of the Contracting Agency to have at the Physical Completion Date a complete and operable system. Therefore when the work involves the installation of machinery or other mechanical equipment; street lighting, electrical distribution or signal systems; irrigation systems; buildings; or other similar work it may be desirable for the Engineer to have the Contractor operate and test the work for a period of time after final inspection but prior to the physical completion date. Whenever items of work are listed in the Contract Provisions for operational testing they shall be fully tested under operating conditions for the time period specified to ensure their acceptability prior to the Physical Completion Date. During and following the test period, the Contractor shall correct any items of workmanship, materials, or equipment which prove faulty, or that are not in first class operating condition. Equipment, electrical controls, meters, or other devices and equipment to be tested during this period shall be tested under the observation of the Engineer, so that the Engineer may determine their suitability for the purpose for which they were installed. The Physical Completion Date cannot be established until testing and corrections have been completed to the satisfaction of the Engineer.

The costs for power, gas, labor, material, supplies, and everything else needed to successfully complete operational testing, shall be included in the unit contract prices related to the system being tested, unless specifically set forth otherwise in the proposal.

Operational and test periods, when required by the Engineer, shall not affect a manufacturer's guaranties or warranties furnished under the terms of the contract.

(March 8, 2013 APWA GSP)

1-05.12 Final Acceptance

Add the following new section:

1-05.12(1) One-Year Guarantee Period

The Contractor shall return to the project and repair or replace all defects in workmanship and material discovered within one year after Final Acceptance of the Work. The Contractor shall start work to remedy any such defects within 7 calendar days of receiving Contracting Agency's written notice of a defect, and shall complete such work within the time stated in the Contracting Agency's notice. In case of an emergency, where damage may result from delay or where loss of services may result, such corrections may be made by the Contracting Agency's own forces or another contractor, in which case the cost of corrections shall be paid by the Contractor. In the event the Contractor does not accomplish corrections within the time specified, the work will be otherwise accomplished and the cost of same shall be paid by the Contractor.

When corrections of defects are made, the Contractor shall then be responsible for correcting all defects in workmanship and materials in the corrected work for one year after acceptance of the corrections by Contracting Agency.

This guarantee is supplemental to and does not limit or affect the requirements that the Contractor's work comply with the requirements of the Contract or any other legal rights or remedies of the Contracting Agency.

(August 14, 2013 APWA GSP)

1-05.13 Superintendents, Labor and Equipment of Contractor

Delete the sixth and seventh paragraph of this section.

(March 25, 2009 APWA GSP)

1-05.15 Method of Serving Notices

Revise the second paragraph to read:

All correspondence from the Contractor shall be directed to the Project Engineer. All correspondence from the Contractor constituting any notification, notice of protest, notice of dispute, or other correspondence constituting notification required to be furnished under the Contract, must be in paper format, hand delivered or sent via mail delivery service to the Project Engineer's office. Electronic copies such as e-mails or electronically delivered copies of correspondence will not constitute such notice and will not comply with the requirements of the Contract.

(October 1, 2005 APWA GSP)

1-05.16 Water and Power

The Contractor shall make necessary arrangements, and shall bear the costs for power and water necessary for the performance of the work, unless the contract includes power and water as a pay item.

Add the following new section:

(March 8, 2013 APWA GSP)

1-05.18 Record Drawings

The Contractor shall maintain one set of full size plans for Record Drawings, updated with clear and accurate red-lined field revisions on a daily basis, and within 2 business days after receipt of information that a change in Work has occurred. The Contractor shall not conceal any work until the required information is recorded.

This Record Drawing set shall be used for this purpose alone, shall be kept separate from other Plan sheets, and shall be clearly marked as Record Drawings. These Record Drawings shall be kept on site at the Contractor's field office, and shall be available for review by the Contracting Agency at all times. The Contractor shall bring the Record Drawings to each progress meeting for review.

The preparation and upkeep of the Record Drawings is to be the assigned responsibility of a single, experienced, and qualified individual. The quality of the Record Drawings, in terms of accuracy, clarity, and completeness, is to be adequate to allow the Contracting Agency to modify the computer-aided drafting (CAD) Contract Drawings to produce a complete set of Record Drawings for the Contracting Agency without further investigative effort by the Contracting Agency.

The Record Drawing markups shall document all changes in the Work, both concealed and visible. Items that must be shown on the markups include but are not limited to:

- Actual dimensions, arrangement, and materials used when different than shown in the Plans.
- Changes made by Change Order or Field Order.
- Changes made by the Contractor.
- Accurate locations of storm sewer, sanitary sewer, water mains and other water appurtenances, structures, conduits, light standards, vaults, width of roadways, sidewalks, landscaping areas, building footprints, channelization and pavement markings, etc. Include pipe invert elevations, top of castings (manholes, inlets, etc.).

If the Contract calls for the Contracting Agency to do all surveying and staking, the Contracting Agency will provide the elevations at the tolerances the Contracting Agency requires for the Record Drawings.

When the Contract calls for the Contractor to do the surveying/staking, the applicable tolerance limits include, but are not limited to the following:

	Vertical	Horizontal
As-built sanitary & storm invert and grate elevations	± 0.01 foot	± 0.01 foot
As-built monumentation	± 0.001 foot	± 0.001 foot
As-built waterlines, inverts, valves, hydrants	± 0.10 foot	± 0.10 foot
As-built ponds/swales/water features	± 0.10 foot	± 0.10 foot
As-built buildings (fin. Floor elev.)	± 0.01 foot	± 0.10 foot
As-built gas lines, power, TV, Tel, Com	± 0.10 foot	± 0.10 foot
As-built signs, signals, etc.	N/A	± 0.10 foot

Making Entries on the Record Drawings:

- Use erasable colored pencil (not ink) for all markings on the Record Drawings, conforming to the following color code:
- Additions - Red
- Deletions - Green
- Comments - Blue
- Dimensions - Graphite
- Provide the applicable reference for all entries, such as the change order number, the request for information (RFI) number, or the approved shop drawing number.
- Date all entries.
- Clearly identify all items in the entry with notes similar to those in the Contract Drawings (such as pipe symbols, centerline elevations, materials, pipe joint abbreviations, etc.).

The Contractor shall certify on the Record Drawings that said drawings are an accurate depiction of built conditions, and in conformance with the requirements detailed above. The Contractor shall submit final Record Drawings to the Contracting Agency. Contracting Agency acceptance of the Record Drawings is one of the requirements for achieving Physical Completion.

Payment will be made for the following bid item:

Bid Item 3 “Record Drawings” (Minimum Bid $5,000)	Lump Sum

Payment for this item will be made on a prorated monthly basis for work completed in accordance with this section up to 75% of the lump sum bid. The final 25% of the lump sum item will be paid upon submittal and approval of the completed Record Drawings set prepared in conformance with these Special Provisions.

A minimum bid amount has been entered in the Bid Proposal for this item. The Contractor must bid at least that amount.

(November 19, 2019 COK GSP)

1-05.19 Daily Construction Report

Add the following new Section:

The Contractor and Subcontractors shall maintain daily, a Daily Construction Report of the Work. TheDiary must be kept and maintained by Contractor's designated project superintendent(s). Entries mustbe made on a daily basis and must accurately represent all of the project activities on each day. Contractor shall provide signed copies of diary sheets from the previous week to Engineer at each Weekly Coordination Meeting.

Every single diary sheet/page must have:

- Project name & number;
- Consecutive numbering of pages, and
- Typed or printed name, signature, and date of the person making the entry.

At a minimum, the diary shall, for each day, have a separate entry detailing each of the following:

1. Day and date.
2. Weather conditions, including changes throughout the day.
3. Complete description of work accomplished during the day, with adequate references to thePlans and Contract Provisions so the reader can easily and accurately identify said work onthe Plans. Identify location/description of photographs or videos taken that day.
4. Each and every changed condition, dispute or potential dispute, incident, accident, or occurrence of any nature whatsoever which might affect Contractor, Contracting Agency, orany third party in any manner. This shall be provided on a separate page for other information.
5. List all materials received and stored on- or off-site by Contractor that day for futureinstallation, including the manner of storage and protection of the same.
6. List materials installed that day.
7. List all Subcontractors working on-site that day.
8. List the number of Contractor's employees working during each day, by category ofemployment.
9. List Contractor's equipment on the site that day; showing which were in use, and which idle.
10. Notations to explain inspections, testing, stake-out, and all other services furnished byContracting Agency or other party during the day.
11. Verify the daily (including non-workdays) inspection and maintenance of traffic controldevices and condition of the traveled roadway surfaces.
12. Any other information that serves to give an accurate and complete record of the nature,quantity, and quality of Contractor's progress on each day.
13. Add: Officials and visitors onsite.
14. Change Orders.
15. Occurrence of testing, staking or special inspections.

It is expressly agreed between Contractor and Contracting Agency that the Daily Diary maintained by Contractor shall be the "Contractor's Book of Original Entry" for the documentation of any potential claims or disputes that might arise during this Contract. Failure of Contractor to maintain this Diary in the manner described above will constitute a waiver of any such claims or disputes by Contractor.

Preparation of the Daily Diary by the contractor shall be incidental to the unit prices for applicable items document. No separate payment shall be made for preparation and maintaining the Daily Diary.

Engineer or his representative on the Job site will also complete a Daily Construction Report.

1-06 CONTROL OF MATERIAL

(1/1/2016 COK GSP)

1-06.1 Approval of Materials Prior to Use

Section 1-06.1 is supplemented as follows:

Approval of a Material source shall not mean acceptance of the Material. The Material shall meet the requirements of the Contract.

(June 27, 2011 AWPA GSP)

1-06.1(4) Fabrication Inspection Expense

Delete this section in its entirety.

(January 4, 2016 APWA GSP)

1-06.6 Recycled Materials

Delete this section, including its subsections, and replace it with the following:

Recycled concrete aggregate is not allowed on the project unless it is encased in concrete or Hot-mix asphalt.

The Contractor shall make their best effort to utilize recycled materials in the construction of the project. Approval of such material use shall be as detailed elsewhere in the Standard Specifications.

Prior to Physical Completion the Contractor shall report the quantity of recycled materials that were utilized in the construction of the project for each of the items listed in Table 9-03.21(1)E in Section 9-03.21. The report shall include hot mix asphalt, recycled glass, steel furnace slag and other recycled materials (e.g. utilization of on-site material and aggregates from concrete returned to the supplier). The Contractor's report shall be provided on DOT form 350-075 Recycled Materials Reporting.

1-07 LEGAL RELATIONS AND RESPONSIBILITIES TO THE PUBLIC

(1/1/2016 COK GSP)

1-07.1 Laws to Be Observed

Section 1-07.1 is supplemented with the following:

The Contractor shall at all times eliminate noise to the maximum practicable extent. Air compressing plants shall be equipped with silencers, and the exhaust of all gasoline motors or other power equipment shall be provided with mufflers. Special care shall be used to avoid noise or other nuisances, and the Contractor shall strictly observe all federal, state, and local regulations concerning noise.

The Contractor shall make an effort to reduce carbon emissions by turning off engines on construction equipment not in active use, and on trucks that are idling while waiting to load or unload material for five minutes or more.

Compliance with Laws

The Contractor shall comply with the requirements of all other City ordinances, state statutes, laws, and regulations, whether or not stated herein, which are specifically applicable to the public improvements and work to be performed.

(October 1, 2005 APWA GSP)

Supplement this section with the following:

In cases of conflict between different safety regulations, the more stringent regulation shall apply.

The Washington State Department of Labor and Industries shall be the sole and paramount administrative agency responsible for the administration of the provisions of the Washington Industrial Safety and Health Act of 1973 (WISHA).

The Contractor shall maintain at the project site office, or other well known place at the project site, all articles necessary for providing first aid to the injured. The Contractor shall establish, publish, and make known to all employees, procedures for ensuring immediate removal to a hospital, or doctor's care, persons, including employees, who may have been injured on the project site. Employees should not be permitted to work on the project site before the Contractor has established and made known procedures for removal of injured persons to a hospital or a doctor's care.

The Contractor shall have sole responsibility for the safety, efficiency, and adequacy of the Contractor's plant, appliances, and methods, and for any damage or injury resulting from their failure, or improper maintenance, use, or operation. The Contractor shall be solely and completely responsible for the conditions of the project site, including safety for all persons and property in the performance of the work. This requirement shall apply continuously, and not be limited to normal working hours. The required or implied duty of the Engineer to conduct construction review of the Contractor's performance does not, and shall not, be intended to include review and adequacy of the Contractor's safety measures in, on, or near the project site.

(1/1/2016 COK GSP)

Contractor's Safety Responsibilities

These construction documents and the joint and several phases of construction hereby contemplated are to be governed at all times by applicable provisions of the federal law(s), including but not limited to the latest amendments of the following:

Williams-Steiger Occupational Safety and Health Act of 1980, Public Law 91-596.

Part 1910 - Occupational Safety and Health Standards, Chapter XVII of Title 29, Code of Federal Regulations.

This project, the Contractor and its subcontractors, shall, at all times, be governed by Chapter XIII of Title 29, Code of Federal Regulations, Part 1518 - Safety and Health Regulations for Construction (35 CFR 75), as amended to date.

To implement the program, and to provide safe and healthful working conditions for all persons, the construction superintendent or his/her designated safety officer shall conduct general project safety meetings at the site at least once each month during the course of construction.

The prime contractor and all subcontractors shall immediately report all accidents, injuries, and health hazards to the Manager, in writing. This shall not obviate any mandatory reporting under the provisions of the Occupational Safety and Health Act of 1970. This program shall become a part of the contract

documents and the contract between the Owner and the Contractor, and all subcontractors, as though fully written therein.

Where the location of the work is in proximity to overhead wires and power lines, the Contractor shall coordinate all work with the utility and shall provide for such measures as may be necessary for the protection of the workers.

(May 13, 2020 COK GSP)

Supplement this section with the following:

In response to the COVID-19 pandemic and the workplace requirements implemented by the State of Washington for construction projects during the pandemic, the Contractor shall prepare a project-specific COVID-19 health and safety plan (CHSP) in conformance with Section 1-07.4(2) as amended by this Contract's Special Provisions.

(June 27, 2011 APWA GSP)

1-07.2 State Taxes

Delete this section, including its sub-sections, in its entirety and replace it with the following:

1-07.2 State Sales Tax

The Washington State Department of Revenue has issued special rules on the State sales tax. Sections 1-07.2(1) through 1-07.2(3) are meant to clarify those rules. The Contractor should contact the Washington State Department of Revenue for answers to questions in this area. The Contracting Agency will not adjust its payment if the Contractor bases a bid on a misunderstood tax liability.

The Contractor shall include all Contractor-paid taxes in the unit bid prices or other contract amounts. In some cases, however, state retail sales tax will not be included. Section 1-07.2(2) describes this exception.

The Contracting Agency will pay the retained percentage (or release the Contract Bond if a FHWA-funded Project) only if the Contractor has obtained from the Washington State Department of Revenue a certificate showing that all contract-related taxes have been paid (RCW 60.28.051). The Contracting Agency may deduct from its payments to the Contractor any amount the Contractor may owe the Washington State Department of Revenue, whether the amount owed relates to this contract or not. Any amount so deducted will be paid into the proper State fund.

1-07.2(1) State Sales Tax — Rule 171

WAC 458-20-171, and its related rules, apply to building, repairing, or improving streets, roads, etc., which are owned by a municipal corporation, or political subdivision of the state, or by the United States, and which are used primarily for foot or vehicular traffic. This includes storm or combined sewer systems within and included as a part of the street or road drainage system and power lines when such are part of the roadway lighting system. For work performed in such cases, the Contractor shall include Washington State Retail Sales Taxes in the various unit bid item prices, or other contract amounts, including those that the Contractor pays on the purchase of the materials, equipment, or supplies used or consumed in doing the work.

1-07.2(2) State Sales Tax — Rule 170

WAC 458-20-170, and its related rules, apply to the constructing and repairing of new or existing buildings, or other structures, upon real property. This includes, but is not limited to, the construction of streets, roads, highways, etc., owned by the state of Washington; water mains and their appurtenances; sanitary sewers and sewage disposal systems unless such sewers and disposal systems are within, and a part of, a street or road drainage system; telephone, telegraph, electrical

power distribution lines, or other conduits or lines in or above streets or roads, unless such power lines become a part of a street or road lighting system; and installing or attaching of any article of tangible personal property in or to real property, whether or not such personal property becomes a part of the realty by virtue of installation.

For work performed in such cases, the Contractor shall collect from the Contracting Agency, retail sales tax on the full contract price. The Contracting Agency will automatically add this sales tax to each payment to the Contractor. For this reason, the Contractor shall not include the retail sales tax in the unit bid item prices, or in any other contract amount subject to Rule 170, with the following exception.

Exception: The Contracting Agency will not add in sales tax for a payment the Contractor or a subcontractor makes on the purchase or rental of tools, machinery, equipment, or consumable supplies not integrated into the project. Such sales taxes shall be included in the unit bid item prices or in any other contract amount.

1-07.2(3) Services

The Contractor shall not collect retail sales tax from the Contracting Agency on any contract wholly for professional or other services (as defined in Washington State Department of Revenue Rules 138 and 244).

1-07.4(2) Health Hazards

Supplement this section with the following:

COVID-19 Health and Safety Plan (CHSP)

The Contractor shall prepare a project-specific COVID-19 health and safety plan (CHSP). The CHSP shall be prepared and submitted as a Type 2 Working Drawing prior to beginning physical Work. The CHSP shall be based on the most current State and Federal requirements. If the State or Federal requirements are revised, the CHSP shall be updated as necessary to conform to the current requirements.

The Contractor shall update and resubmit the CHSP as the work progresses and new activities appear on the look ahead schedule required under Section 1-08.3(2)D. If the conditions change on the project, or a particular activity, the Contractor shall update and resubmit the CHSP. Work on any activity shall cease if conditions prevent full compliance with the CHSP.

The CHSP shall address the health and safety of all people associated with the project including State workers in the field, Contractor personnel, consultants, project staff, subcontractors, suppliers, and anyone on the project site, staging areas, or yards.

COVID-19 Health and Safety Plan (CHSP) Inspection

The Contractor shall grant full and unrestricted access to the Engineer for CHSP inspections. The Engineer (or designee) will conduct periodic compliance inspections on the project site, staging areas, or yards to verify that any ongoing work activity is following the CHSP. If the Engineer becomes aware of a noncompliance incident either through a site inspection or other means, the Contractor will be notified immediately (within 1 hour). The Contractor shall immediately remedy the noncompliance incident or suspend all or part of the associated work activity. The Contractor shall satisfy the Engineer that the noncompliance incident has been corrected before the suspension will end.

All materials and equipment needed to generate and implement the CHSP are considered incidental to other bid items, such as but not limited to, site supervisor to implement the plan,

worker daily temperature checks, providing project team with masks, and providing handwashing stations.

(January 3, 2020 APWA GSP, Option A)

1-07.9(5) Required Documents

Delete this section and replace it with the following:

A. General

All "Statements of Intent to Pay Prevailing Wages", "Affidavits of Wages Paid" and Certified Payrolls, including a signed Statement of Compliance for Federal-aid projects, shall be submitted to the Engineerand the State L&I online Prevailing Wage Intent & Affidavit (PWIA) system.

B. Intents and Affidavits

On forms provided by the Industrial Statistician of State L&I, the Contractor shall submit to the Engineer the following for themselves and for each firm covered under RCW 39.12 that will or has provided Work and materials for the Contract:

1. The approved "Statement of Intent to Pay Prevailing Wages" State L&I's form number F700-029-000. The Contracting Agency will make no payment under this Contract until this statement has been approved by State L&I and reviewed by the Engineer.

2. The approved "Affidavit of Prevailing Wages Paid," State L&I's form number F700-007-000. The Contracting Agency will not grant Completion until all approved Affidavit of Wages paid for the Contractor and all Subcontractors have been received by the Engineer. The Contracting Agency will not release to the Contractor any funds retained under RCW 60.28.011 until "Affidavit of Prevailing Wages Paid" forms have been approved by State L&I and all of the approved forms have been submitted to the Engineer for every firm that workedon the Contract.

The Contractor is responsible for requesting these forms from State L&I and for paying any fees required by State L&I.

C. Certified Payrolls

Certified payrolls are required to be submitted by the Contractor for themselves, all Subcontractors and all lower tier subcontractors. The payrolls shall be submitted weekly on all Federal-aid projects and noless than monthly on State funded projects.

D. Penalties for Noncompliance

The Contractor is advised, if these payrolls are not supplied within the prescribed deadlines, any or allpayments may be withheld until compliance is achieved. In addition, failure to provide these payrolls may result in other sanctions as provided by State laws (RCW 39.12.050) and/or Federal regulations (29 CFR 5.12).

(July 18, 2016 APWA GSP)

1-07.11 Requirements for Nondiscrimination

Supplement this section with the following:

Voluntary Minority, Small, Veteran and Women's Business Enterprise (MSVWBE) Participation

General Statement

Voluntary goals for minority, small, veteran and women business enterprises are included in this Contract. The Contractor is encouraged to utilize MSVWBEs in accordance with these Specifications, RCW 39.19 and Executive Order 13-01 (issued by the Governor of Washington on May 10, 2013).

No preference will be included in the evaluation of the Contractor's Proposal or Bid; no minimum level of MSVWBE participation is required as a condition of award or completion of the Contract; and a Proposal or Bid will not be rejected or considered non-responsive on that basis.

The goals are voluntary and outreach efforts to provide MSVWBEs maximum practicable opportunities are encouraged.

Non-Discrimination

Contractors shall not create barriers to open and fair opportunities for all businesses, including MSVWBEs, to participate in the Work on this Contract. This includes the opportunity to compete for subcontracts as sources of supplies, equipment, construction or services.

The Contractor shall make Voluntary MSVWBE Participation a part of all subcontracts and agreements entered into as a result of this Contract.

Voluntary MSVWBE Participation Goals

Goals for voluntary MSVWBE participation have been established as a percentage of Contractor's total Bid amount.

The Contracting Agency has established the following voluntary goals:

Minority	10%
Small	5%
Veteran	5%
Women	6%

Amounts paid to an MSVWBE will be credited to every voluntary goal in which they are eligible. In other words participation may be credited for participation in more than one category. If the Contractor is a MSVWBE their Work will be credited to the voluntary goals in which they are eligible.

Definitions

Minority Business Enterprise (MBE)
A minority owned business meeting the requirements of RCW 39.19 and WAC 326-20 and certified by the Washington State Office of Minority & Women's Business Enterprises.

Small Business
A business meeting the Washington State requirements for a "Small business", "Minibusiness" or "Microbusiness as defined in RCW 39.26.010 and included on the WSDOT Office of Equal Opportunity list of Small Businesses at http://www.wsdot.wa.gov/equalopportunity/bddirectory.htm

Veteran Business
A veteran owned business meeting the requirements of RCW 43.60A.010 and included on the WSDOT Office of Equal Opportunity list of Veteran Businesses at http://www.wsdot.wa.gov/equalopportunity/bddirectory.htm

Women Business Enterprise (WBE)
A women owned business meeting the requirements of RCW 39.19 and WAC 326-20 and certified by the Washington State Office of Minority & Women's Business Enterprises.

MSVWBE Inclusion Plan
A MSVWBE Inclusion Plan shall be submitted to the Engineer prior to the start of Work on the project. The plan is submitted for the Contracting Agency's information. Approval of the plan is not required; an incomplete plan will be returned for correction and resubmittal. The plan shall include the information identified in the guidelines at http://www.wsdot.wa.gov/EqualOpportunity/MSVWBE.htm.

MSVWBE Reporting
An end of project Report of Amounts Paid to MSVWBEs shall be submitted to the Engineer after Physical Completion of the Contract. The end of project report is due 20 calendar days after the physical completion of the project has been issued.

The end of project report shall include payments to all eligible businesses regardless of their listing on the MSVWBE Inclusion Plan. If the Contractor is a MSVWBE the amounts paid by the Contracting Agency for Work performed by the Contractor shall also be reported.

MSVWBE Payment
All costs for implementation of the requirements for Voluntary MSVWBE Participation shall be included in the associated items of Contract Work.

(1/1/2016 COK GSP)

1-07.14 Responsibility for Damage

Section 1-07.14 is supplemented with the following:

The Contractor further agrees that it is waiving immunity under Industrial Insurance Law Title 51 RCW for any claims brought against the City by its employees. In the event Contractor fails, after receipt of timely notice from the City, to appear, defend, or pay as required by the first paragraph of this section, then in that event and in that event only, the City may in its sole discretion, deduct from the progress payments to the Contractor and pay any amount sufficient to pay any claim, of which the City may have knowledge and regardless of the informalities of notice of such claim, arising out of the performance of this contract, provided the City has theretofore given notice of receipt of such claim to the Contractor and the Contractor has failed to act thereon.

1-07.15 Temporary Water Pollution/Erosion Control

(1/10/2019 COK GSP)

1-07.15(1) Spill Prevention, Control, and Countermeasures Plan

Add the following as the second paragraph of this section:

In the event the Contractor uses an SPCC Plan template that either follows the WSDOT SPCC Plan Template or contains the same or similar content and/or format, the following changes shall be required:

1. Replace all references to "WSDOT" as either the Contracting Agency or project owner with "City of Kirkland", except where indicated in this Section.
2. Add into all Spill Reporting and related section(s): "The City of Kirkland Spill Response Hotline at (425) 587-3900 shall be the first point of contact in the event of a spill. Notification to the City of Kirkland Spill Response Hotline shall precede the spill notifications to federal and state agencies."
3. Delete all references to the "WSDOT Environmental Compliance Assurance Procedure" (ECAP) in the SPCC.

Supplement the following referenced SPCC Plan Element Requirements in this Section as follows:

2. Add: "The City of Kirkland Spill Response Hotline at (425) 587-3900 shall be the first point of contact in the event of a spill."
8. Add: "As part of Contractor spill response procedure, the Contractor shall contact the City of Kirkland Spill Response Hotline at (425) 587-3900 to report the spill regardless of whether or not the Contractor has fully contained, controlled, and/or cleaned up the spill."

No measurement shall be taken for Work in this Section.

Payment will be made for the following bid item:

Bid Item 5 "Spill Prevention, Control, and Countermeasures (SPCC) Plan"	Lump Sum

The lump sum price for Spill Prevention, Control, and Countermeasures Plan shall include full payment for furnishing all materials, tools, labor, and equipment needed to prepare and secure approval of the Contractor's SPCC Plan and implement the plan throughout the Work, as required by these Contract Documents and the Standard Specifications.

1-07.16 Protection and Restoration of Property

(1/1/2016 COK GSP)

1-07.16(3) Fences, Mailboxes, Incidentals

Section 1-07.16(3) is supplemented with the following:

U.S. Postal Service Collection Boxes, Mail Receptacles, and other Structures: U.S. Postal Service collection box and other Structures requiring temporary relocation to accommodate construction, the Contractor shall contact the Kirkland Postmaster at least 5 Working Days in advance for coordination. Only the U.S. Post Office will move Postal Service-owned property.

(1/1/2016 COK GSP)

1-07.17 Utilities and Similar Facilities

Section 1-07.17 is supplemented with the following:

Locations and dimensions shown in the Plans for existing facilities are in accordance with available information obtained without uncovering, measuring, or other verification.

The Contractor is alerted to the existence of Chapter 19.122 RCW, a law relating to underground utilities. Any cost to the Contractor incurred as a result of this law shall be at the Contractor's expense.

No excavation shall begin until all known facilities in the vicinity of the excavation area have been located and marked.

The Contractor shall give advance notice to all utility companies involved where work is to take place and in all other respects comply with the provisions of Chapter 19.122 RCW. Notice shall include, but not be limited to, the following utility companies:

4. Water, sewer, storm, streets – minimum two working days in advance
5. Power (Electric and Natural Gas) – minimum 48 hours in advance
6. Telephone – minimum 30 days in advance
7. Natural Gas – minimum 48 hours in advance
8. Cable Television – minimum 48 hours in advance
9. Transit – minimum 21 days in advance

The following is a list of some utilities serving the Kirkland area. This is not intended or represented to be a complete list and is provided for the Contractor's convenience.

Utility	**Agency/Company**	**Address**	**Contact**	**Phone**
Water/Sewer	City of Kirkland	123 Fifth Avenue Kirkland, WA 98033	Josh Pantzke	(425) 587-3900
Storm Drainage	City of Kirkland	123 Fifth Avenue Kirkland, WA 98033	Josh Pantzke	(425) 587-3900
Water / Sewer (North area of Kirkland)	Northshore Utility District	6380 NE 185th St Kenmore, WA 98028	George Matote	(425) 398-4400
Street	City of Kirkland	123 Fifth Avenue Kirkland, WA 98033	Nathen Hower	(425) 587-3900
Natural Gas / Electric	Puget Sound Energy	P.O. Box 97034 EST-11W Bellevue, Washington 98009-9734	Jeanne Coleman	(425) 449-7410
Telephone/ FIOS	Zipley Communications		Jay Schwab	(425) 263-4019
Cable Television	Comcast	1525 - 75th St SW, Suite 200 Everett, WA 98203	Joe Fordon Raymond Pilkenton	(425) 263-5348 (425) 263-5332
Network	Verizon/MCI	11311 NE 120th St Kirkland, WA 98034	Brad Landis Scott Christenson	(425) 201-0901 (425) 471-1079
School District Transportation	Lake Washington School District	15212 NE 95th St Redmond, WA 98052	Jeff Miles	(425) 936-1120

Utility	Agency/Company	Address	Contact	Phone
Transit	King County METRO	MS SVQ-TR-0100 1270 6th Ave S Seattle, WA 98134	METRO Construction Information Center	(206) 477-1140 (206) 477-0438
Water (Northeast area of Kirkland)	Woodinville Water District	17238 NE Woodinville Duvall Road, Woodinville, WA 98072	Ken McDowell	(425) 487-4104
Olympic Pipeline	BP		Kenneth Metcalf Joseph Stone	(425) 981-2575 (425) 981-2506

Note that most utility companies may be contacted for locations through the "One Call" system, 1-800-424-5555. In the event of a gas emergency, call 911 and then the PSE hotline at 1-888-225-5773 (1-888-CALL-PSE).

The Contractor shall coordinate the work with these utilities and shall notify the Engineer in advance of any conflicts affecting the work schedule. The utility companies shall witness or perform all shutdowns, connections or disconnections.

Wherever in the course of the construction operation it becomes necessary to cause an outage of utilities, it shall be the Contractor's responsibility to notify the affected users not less than twenty-four (24) hours in advance of the creation of such outage. The Contractor shall make reasonable effort to minimize the duration of outages.

The Contractor shall be responsible for any breakage of utilities or services resulting from its operations and shall hold the City and its agents harmless from any claims resulting from disruption of, or damage to, same.

Other Notifications

Service Area Turn Off: All service area turn off notices must be distributed to affected parties two working days in advance of any scheduled shut off. City to provide door hangers and affected service area map. The contractor shall fill in all required information prior to hanging door hanger.

Entry onto Private Property: Each property owner shall be given two working days advance Written Notice prior to entry by the Contractor.

Loop Detection Systems: Where an excavation is to take place through a signal loop detector system, the Contractor shall provide at least five (5) Working Days advance notice to the City Signal Shop at (425) 587-3920 to coordinate temporary signal wire disconnect and installation of temporary signal detection equipment.

Survey Monuments: When proposed pavement removal is close to existing survey monumentation, or proposed pavement removal includes existing survey monumentation, the Contractor shall provide a minimum 4 Working Days advance notice to the Engineer to allow survey crews to tie the monument out and reset the monument after pavement installation.

(1/1/2016 COK GSP)

1-07.17(2) Utility Construction, Removal or Relocation by Others

Section 1-07.17(2) is supplemented with the following:

Under no circumstances will discrepancies in location or incompleteness in description of existing utilities or improvements, whether they are visible from the surface, buried, or otherwise obscured, be considered as a basis for additional compensation to the Contractor.

(January 4, 2016 APWA GSP)

1-07.18 Public Liability and Property Damage Insurance

Delete this section in its entirety, and replace it with the following:

1-07.18 Insurance

1-07.18(1) General Requirements

A. The Contractor shall procure and maintain the insurance described in all subsections of section 1-07.18 of these Special Provisions, from insurers with a current A. M. Best rating of not less than A: VII and licensed to do business in the State of Washington. The Contracting Agency reserves the right to approve or reject the insurance provided, based on the insurer's financial condition.

B. The Contractor shall keep this insurance in force without interruption from the commencement of the Contractor's Work through the term of the Contract and for thirty (30) days after the Physical Completion date, unless otherwise indicated below.

C. If any insurance policy is written on a claims made form, its retroactive date, and that of all subsequent renewals, shall be no later than the effective date of this Contract. The policy shall state that coverage is claims made, and state the retroactive date. Claims-made form coverage shall be maintained by the Contractor for a minimum of 36 months following the Completion Date or earlier termination of this Contract, and the Contractor shall annually provide the Contracting Agency with proof of renewal. If renewal of the claims made form of coverage becomes unavailable, or economically prohibitive, the Contractor shall purchase an extended reporting period ("tail") or execute another form of guarantee acceptable to the Contracting Agency to assure financial responsibility for liability for services performed.

D. The Contractor's Automobile Liability, Commercial General Liability and Excess or Umbrella Liability insurance policies shall be primary and non-contributory insurance as respects the Contracting Agency's insurance, self-insurance, or self-insured pool coverage. Any insurance, self-insurance, or self-insured pool coverage maintained by the Contracting Agency shall be excess of the Contractor's insurance and shall not contribute with it.

E. The Contractor shall provide the Contracting Agency and all additional insureds with written notice of any policy cancellation, within two business days of their receipt of such notice.

F. The Contractor shall not begin work under the Contract until the required insurance has been obtained and approved by the Contracting Agency

G. Failure on the part of the Contractor to maintain the insurance as required shall constitute a material breach of contract, upon which the Contracting Agency may, after giving five business days' notice to the Contractor to correct the breach, immediately terminate the Contract or, at its discretion, procure or renew such insurance and pay any and all premiums in connection therewith, with any sums so expended to be repaid to the Contracting Agency on demand, or at the sole discretion of the Contracting Agency, offset against funds due the Contractor from the Contracting Agency.

H. All costs for insurance shall be incidental to and included in the unit or lump sum prices of the Contract and no additional payment will be made.

1-07.18(2) Additional Insured

All insurance policies, with the exception of Workers Compensation, and of Professional Liability and Builder's Risk (if required by this Contract) shall name the following listed entities as additional insured(s) using the forms or endorsements required herein:

- the Contracting Agency and its officers, elected officials, employees, agents, and volunteers

The above-listed entities shall be additional insured(s) for the full available limits of liability maintained by the Contractor, irrespective of whether such limits maintained by the Contractor are greater than those required by this Contract, and irrespective of whether the Certificate of Insurance provided by the Contractor pursuant to 1-07.18(4) describes limits lower than those maintained by the Contractor.

For Commercial General Liability insurance coverage, the required additional insured endorsements shall be at least as broad as ISO forms CG 20 10 10 01 for ongoing operations and CG 20 37 10 01 for completed operations.

1-07.18(3) Subcontractors

The Contractor shall cause each Subcontractor of every tier to provide insurance coverage that complies with all applicable requirements of the Contractor-provided insurance as set forth herein, except the Contractor shall have sole responsibility for determining the limits of coverage required to be obtained by Subcontractors.

The Contractor shall ensure that all Subcontractors of every tier add all entities listed in 1-07.18(2) as additional insureds, and provide proof of such on the policies as required by that section as detailed in 1-07.18(2) using an endorsement as least as broad as ISO CG 20 10 10 01 for ongoing operations and CG 20 37 10 01 for completed operations.

Upon request by the Contracting Agency, the Contractor shall forward to the Contracting Agency evidence of insurance and copies of the additional insured endorsements of each Subcontractor of every tier as required in 1-07.18(4) Verification of Coverage.

1-07.18(4) Verification of Coverage

The Contractor shall deliver to the Contracting Agency a Certificate(s) of Insurance and endorsements for each policy of insurance meeting the requirements set forth herein when the Contractor delivers the signed Contract for the work. Failure of Contracting Agency to demand such verification of coverage with these insurance requirements or failure of Contracting Agency to identify a deficiency from the insurance documentation provided shall not be construed as a waiver of Contractor's obligation to maintain such insurance.

Verification of coverage shall include:

1. An ACORD certificate or a form determined by the Contracting Agency to be equivalent.

2. Copies of all endorsements naming Contracting Agency and all other entities listed in 1-07.18(2) as additional insured(s), showing the policy number. The Contractor may submit a copy of any blanket additional insured clause from its policies instead of a separate endorsement.

3. Any other amendatory endorsements to show the coverage required herein.

4. A notation of coverage enhancements on the Certificate of Insurance shall <u>not</u> satisfy these requirements – actual endorsements must be submitted.

Upon request by the Contracting Agency, the Contractor shall forward to the Contracting Agency a full and certified copy of the insurance policy(s). If Builders Risk insurance is required on this Project, a full and certified copy of that policy is required when the Contractor delivers the signed Contract for the work.

1-07.18(5) Coverages and Limits

The insurance shall provide the minimum coverages and limits set forth below. Contractor's maintenance of insurance, its scope of coverage, and limits as required herein shall not be construed to limit the liability of the Contractor to the coverage provided by such insurance, or otherwise limit the Contracting Agency's recourse to any remedy available at law or in equity.

All deductibles and self-insured retentions must be disclosed and are subject to approval by the Contracting Agency. The cost of any claim payments falling within the deductible or self-insured retention shall be the responsibility of the Contractor. In the event an additional insured incurs a liability subject to any policy's deductibles or self-insured retention, said deductibles or self-insured retention shall be the responsibility of the Contractor.

1-07.18(5)A Commercial General Liability

Commercial General Liability insurance shall be written on coverage forms at least as broad as ISO occurrence form CG 00 01, including but not limited to liability arising from premises, operations, stop gap liability, independent contractors, products-completed operations, personal and advertising injury, and liability assumed under an insured contract. There shall be no exclusion for liability arising from explosion, collapse or underground property damage.

The Commercial General Liability insurance shall be endorsed to provide a per project general aggregate limit, using ISO form CG 25 03 05 09 or an equivalent endorsement.

Contractor shall maintain Commercial General Liability Insurance arising out of the Contractor's completed operations for at least three years following Substantial Completion of the Work.

Such policy must provide the following minimum limits:

$1,000,000	Each Occurrence
$2,000,000	General Aggregate
$2,000,000	Products & Completed Operations Aggregate
$1,000,000	Personal & Advertising Injury each offence
$1,000,000	Stop Gap / Employers' Liability each accident

1-07.18(5)B Automobile Liability

Automobile Liability shall cover owned, non-owned, hired, and leased vehicles; and shall be written on a coverage form at least as broad as ISO form CA 00 01. If the work involves the transport of pollutants, the automobile liability policy shall include MCS 90 and CA 99 48 endorsements.

Such policy must provide the following minimum limit:

$1,000,000	Combined single limit each accident

1-07.18(5)C Workers' Compensation

The Contractor shall comply with Workers' Compensation coverage as required by the Industrial Insurance laws of the State of Washington.

(January 4, 2016 APWA GSP)

1-07.18(5)D Excess or Umbrella Liability

The Contractor shall provide Excess or Umbrella Liability insurance with limits of not less than **3** million each occurrence and annual aggregate. This excess or umbrella liability coverage shall be excess over and as least as broad in coverage as the Contractor's Commercial General and Auto Liability insurance

All entities listed under 1-07.18(2) of these Special Provisions shall be named as additional insureds on the Contractor's Excess or Umbrella Liability insurance policy.

This requirement may be satisfied instead through the Contractor's primary Commercial General and Automobile Liability coverages, or any combination thereof that achieves the overall required limits of insurance.

(January 4, 2016 APWA GSP)

1-07.18(5)E LHWCA Insurance

If this Contract involves work on or adjacent to Navigable Waters of the United States, the Contractor shall procure and maintain insurance coverage in compliance with the statutory requirements of the U.S. Longshore and Harbor Workers' Compensation Act (LHWCA).

Such policy must provide the following minimum limits:

$1,000,000	Bodily Injury by Accident – each accident
$1,000,000	Bodily Injury by Disease – each employee
$1,000,000	Bodily Injury by Disease – policy limits.

(January 4, 2016 APWA GSP)

1-07.18(5)F Protection & Indemnity Insurance Including Jones Act

If this Contract involves marine activities, or work from a boat, vessel, or floating platform, the Contractor shall procure and maintain Protection and Indemnity (P&I) coverage including collision liability, injury to crew (Merchant Marine Act of 1920 - Jones Act) and passengers, removal of wreck and liability for seepage, pollution, containment and cleanup using form SP-23 or SP 38 or a form as least as broad.

All entities listed under 1-07.18(2) of these Special Provisions shall be named as additional insureds on the Contractor's Protection and Indemnity insurance policy.

Such policy must provide the following minimum limits:

$1,000,000	Bodily Injury by Accident – each accident or occurrence
$1,000,000	Bodily Injury by Disease – each employee
$1,000,000	Bodily Injury by Disease – policy limits

(January 4, 2016 APWA GSP)

1-07.18(5)G Hull and Machinery

If this Contract involves use of a boat, vessel, or floating platform, the Contractor shall procure and maintain coverage at Market Value of vessel on American Institute Hull Clauses, 6/2/77 form.

(January 4, 2016 APWA GSP)

1-07.18(5)H Marine Pollution

The Contractor shall procure and maintain Pollution Liability (OPA, CERCLA) insurance to satisfy U.S. Coast Guard requirements as respects the Federal Oil Pollution Act of 1990 and the Comprehensive Environmental Response, Compensation and Liability Act of 1980 as amended.

Such policy must provide the following minimum limits, or statutory limits of liability as applicable, whichever is higher:

$1,000,000 per Occurrence

(January 4, 2016 APWA GSP)

1-07.18(5)I Builder's Risk

Contractor shall purchase and maintain Builder's Risk insurance covering interests of the Contracting Agency, the Contractor, and Subcontractors of every tier, as Named Insureds, in the Work. An Installation Floater instead of Builders Risk is acceptable for renovation projects. Builder's Risk insurance shall be on a special form policy, and shall insure against the perils of fire and extended coverage and physical loss or damage, theft, vandalism, malicious mischief and collapse; and flood and earthquake when shown below. The Builder's Risk insurance shall include coverage for temporary buildings, debris removal, and damage to materials in transit or stored off-site. Such insurance shall cover resulting "soft costs" including but not limited to design costs, licensing fees, architect's and engineer's fees, and costs due to delay in completion.

PROPERTY INSURANCE: The Contractor shall purchase and maintain property insurance upon the entire Work at the site to 115 percent of the full value thereof. This insurance shall include the interests the City of Kirkland, the Contractor, and all subcontractors in the Work being performed. The coverage shall be written on a "Builder's Risk" basis. All materials which are to be made part of the construction project are to be so insured while being stored at or off the job site(s) and/or while being transported to and from the job site(s). Builders Risk insurance shall be on a special perils policy form and shall insure against the perils of fire and extended coverage and physical loss or damage including flood, earthquake, theft, vandalism, malicious mischief, and collapse. The Builders Risk insurance shall include coverage for temporary buildings, debris removal, and damage to materials in transit or stored off- site. This Builders Risk insurance covering the work will have a deductible of $5,000 for each occurrence, which will be the responsibility of the Contractor. Higher deductibles

for flood and earthquake perils may be accepted by the Owner upon written request by the Contractor and written acceptance by the Owner. Any increased deductibles accepted by the Owner will remain the responsibility of the Contractor. The Builders Risk insurance shall be maintained until the Owner has granted substantial completion of the project. Insurance against loss of tools, equipment, construction, or otherwise not to be incorporated into the Work is the responsibility of the Contractor and the cost of such insurance shall not be included in the cost of insurance required herein before.

The Contractor shall provide the Contracting Agency with a full and certified copy of the insurance policy when the Contractor delivers the signed Contract for the work. Failure of Contracting Agency to demand such verification of coverage with these insurance requirements or failure of Contracting Agency to identify a deficiency from the insurance documentation provided shall not be construed as a waiver of Contractor's obligation to maintain such insurance.

The Builders Risk insurance shall be maintained until final acceptance of the Work by the Contracting Agency.

The Contractor and the Contracting Agency waive all rights against each other and any of their Subcontractors of every tier, agents, and employees, officers, and officials, for damages caused by fire or other perils to the extent covered by Builder's Risk insurance or other property insurance applicable to the work. The policies shall provide such waivers by endorsement.

(January 4, 2016 APWA GSP)

1-07.18(5)J Pollution Liability

The Contractor shall provide a Contractors Pollution Liability policy, providing coverage for claims involving bodily injury, property damage (including loss of use of tangible property that has not been physically

injured), cleanup costs, remediation, disposal or other handling of pollutants, including costs and expenses incurred in the investigation, defense, or settlement of claims, arising out of any one or more of the following:

1. Contractor's operations related to this project.

2. Remediation, abatement, repair, maintenance or other work with lead-based paint or materials containing asbestos.

3. Transportation of hazardous materials away from any site related to this project.

All entities listed under 1-07.18(2) of these Special Provisions shall be named by endorsement as additional insureds on the Contractors Pollution Liability insurance policy.

Such Pollution Liability policy shall provide the following minimum limits:

2 million dollars each loss and annual aggregate

(January 4, 2016 APWA GSP)

1-07.18(5)K Professional Liability

The Contractor and/or its Subcontractor(s) and/or its design consultant providing construction management, value engineering, or any other design-related non-construction professional services shall provide evidence of Professional Liability insurance covering professional errors and omissions.

Such policy shall provide the following minimum limits:

$1,000,000 per claim and annual aggregate

If the scope of such design-related professional services includes work related to pollution conditions, the Professional Liability insurance shall include coverage for Environmental Professional Liability.

If insurance is on a claims made form, its retroactive date, and that of all subsequent renewals, shall be no later than the effective date of this Contract.

1-07.23 Public Convenience and Safety

Section 1-07.23 is supplemented with the following:

(1/1/2016 COK GSP)

No road or street shall be closed to the public except as permitted in these plans and specifications or with the approval of the Engineer and proper governmental authority. Fire hydrants on or adjacent to the work shall be kept accessible to fire fighting equipment at all times. Provision shall be made by the Contractor to ensure the proper functioning of all gutters, sewer inlets, drainage ditches and culverts, irrigation ditches and natural water courses, and storm sewer facilities throughout the project. Temporary interruption of service will be allowed only with the permission of the Engineer.

The Kirkland Police Department and Kirkland Fire Department shall be notified at least four (4) hours in advance of any actions by the Contractor that may affect the functions of either the Police Department or Fire Department.

The Contractor shall conduct its work and take preventative measures so that dust or other particulate matter in the project area shall not become objectionable to the adjacent property owners or general public. Should the Owner determine the Contractor is not fulfilling its obligation in this regard; the Owner reserves the right to take such action as may be necessary to remedy the objectionable condition and to charge the Contractor with any cost that may be incurred in such remedial action. All

work shall be carried on with due regard for the safety of the public. No driveway, whether public, commercial, or private, may be closed without prior approval of the Owner, project supervisor, or Engineer unless written authority has been given by the affected property owner. The Contractor shall be responsible for notifying the affected property owners 24 hours in advance of scheduled interruptions to access.

(1/1/2016 COK GSP)

Pedestrian Control and Protection

When the work area encroaches upon a sidewalk, walkway or crosswalk area, special consideration must be given to pedestrian safety. Maximum effort must be made to separate pedestrians from the work area. Protective barricades, fencing, and bridges, together with warning and guidance devices and signs, shall be utilized so that the passageway for pedestrians is safe and well defined. Whenever pedestrian walkways are provided across excavations, they shall be provided with suitable handrails. Footbridges shall be safe, strong, free of bounce and sway, have a slip resistant coating, and be free of cracks, holes, and irregularities that could cause tripping. Ramps shall be provided at the entrance and exit of all raised footbridges, again to prevent tripping. Adequate illumination and reflectorization shall be provided during hours of darkness. All walkways shall be maintained with at least 4 feet clear width.

For the purposes of bidding, contractors shall assume that the sidewalk and parking areas will open to the public at all times and will not be available for contractor use. The contractor will not be permitted to park equipment or materials in the sidewalk or parking areas.

The project site will contain all the contractor's equipment and materials within the site at all times. Contractor will provide flagging to protect the public from contractor activities, allow trucking deliveries/exportation through the construction access roads as shown in the project drawings.

Physical barricades shall be installed to prevent visually impaired people from inadvertently entering a closed area. Pedestrian walkways shall be wheelchair accessible at all times. Pedestrian access shall be maintained to all properties adjacent to the construction site.

(May 2, 2017 APWA GSP)

1-07.23(1) Construction under Traffic

Revise the third sentence of the second paragraph to read:

Accessibility to existing or temporary pedestrian push buttons shall not be impaired; if approved by the Contracting Agency activating pedestrian recall timing or other accommodation may be allowed during construction.

(July 23, 2015 APWA GSP)

1-07.24 Rights of Way

Delete this section and replace it with the following:

Street Right of Way lines, limits of easements, and limits of construction permits are indicated in the Plans. The Contractor's construction activities shall be confined within these limits, unless arrangements for use of private property are made.

Generally, the Contracting Agency will have obtained, prior to bid opening, all rights of way and easements, both permanent and temporary, necessary for carrying out the work. Exceptions to this are noted in the Bid Documents or will be brought to the Contractor's attention by a duly issued Addendum.

Whenever any of the work is accomplished on or through property other than public Right of Way, the Contractor shall meet and fulfill all covenants and stipulations of any easement agreement obtained by the Contracting Agency from the owner of the private property. Copies of the easement agreements may be included in the Contract Provisions or made available to the Contractor as soon as practical after they have been obtained by the Engineer.

Whenever easements or rights of entry have not been acquired prior to advertising, these areas are so noted in the Plans. The Contractor shall not proceed with any portion of the work in areas where right of way, easements or rights of entry have not been acquired until the Engineer certifies to the Contractor that the right of way or easement is available or that the right of entry has been received. If the Contractor is delayed due to acts of omission on the part of the Contracting Agency in obtaining easements, rights of entry or right of way, the Contractor will be entitled to an extension of time. The Contractor agrees that such delay shall not be a breach of contract.

Each property owner shall be given 48 hours notice prior to entry by the Contractor. This includes entry onto easements and private property where private improvements must be adjusted.

The Contractor shall be responsible for providing, without expense or liability to the Contracting Agency, any additional land and access thereto that the Contractor may desire for temporary construction facilities, storage of materials, or other Contractor needs. However, before using any private property, whether adjoining the work or not, the Contractor shall file with the Engineer a written permission of the private property owner, and, upon vacating the premises, a written release from the property owner of each property disturbed or otherwise interfered with by reasons of construction pursued under this contract. The statement shall be signed by the private property owner, or proper authority acting for the owner of the private property affected, stating that permission has been granted to use the property and all necessary permits have been obtained or, in the case of a release, that the restoration of the property has been satisfactorily accomplished. The statement shall include the parcel number, address, and date of signature. Written releases must be filed with the Engineer before the Completion Date will be established. Additionally, the contractor will be required to secure a temporary use permit from the City of Kirkland Planning Department prior to utilizing the private property.

If the contractor utilizes any private property for storage, they first mush acquire a City Temp use Permit at their own expense.

(1/1/2016 COK GSP)

The Contractor shall file with the Engineer signed property release forms (in the format as detailed below) for all properties disturbed or damaged by the Contractor's operations.

PROPERTY RELEASE

_____
_____
_____
(Contractor's name and address)

DATE: _____

I, _____ owner of _____, hereby release _____, _____*(Contractor's name)* from any property damage or personal injury resulting from construction on or adjacent to my property located at _____ during construction of the _____. My signature below is my acknowledgment and acceptance that my property, as identified above, was returned to a satisfactory condition.

Signed: _____
Name: _____
Address: _____
_____
Phone: _____

1-08 PROSECUTION AND PROGRESS

Add the following new section:

(May 25, 2006 APWA GSP)

1-08.0 Preliminary Matters

Add the following new section:

(October 10, 2008 APWA GSP)

1-08.0(1) Preconstruction Conference

Prior to the Contractor beginning the work, a preconstruction conference will be held between the Contractor, the Engineer and such other interested parties as may be invited. The purpose of the preconstruction conference will be:

1. To review the initial progress schedule;
2. To establish a working understanding among the various parties associated or affected by the work;
3. To establish and review procedures for progress payment, notifications, approvals, submittals, etc.;
4. To establish normal working hours for the work;
5. To review safety standards and traffic control; and
6. To discuss such other related items as may be pertinent to the work.

The Contractor shall prepare and submit at the preconstruction conference the following:

1. A breakdown of all lump sum items;

2. A preliminary schedule of working drawing submittals; and

3. A list of material sources for approval if applicable.

Add the following new section:

(8/16/2019 COK GSP)

1-08.0(2) Hours of Work

Except in the event of an emergency, no work shall be done between the hours of 6:00 p.m. and 7:00 a.m., or weekends (except driveway construction), or holidays observed by the City of Kirkland and identified in Section 1-08.5 of the Standard Specifications. If the proper and efficient prosecution of the work requires operations during the night, hours of operation more than 8 hours per day, or work weeks greater than 40 hours in duration, the written permission of the Owner shall be obtained before starting such items of the work and shall be in full compliance with terms therewith.

Except in the case of emergency or unless otherwise approved by the Contracting Agency, the normal straight time working hours for the contract shall be any consecutive 8-hour period between 7:00 a.m. and 6:00 p.m. of a working day with a maximum 1-hour lunch break and a 5-day work week. The normal straight time 8-hour working period for the contract shall be established at the preconstruction conference or prior to the Contractor commencing the work.

If a Contractor desires to perform work on holidays, Saturdays, Sundays, or before 7:00 a.m. or after 6:00 p.m. on any day, the Contractor shall apply in writing to the Engineer for permission to work such times. Permission to work longer than an 8-hour period between 7:00 a.m. and 6:00 p.m. is required. Such requests shall be submitted to the Engineer 1 week prior to the day for which the Contractor is requesting permission to work.

Permission to work between the hours of 10:00 p.m. and 7:00 a.m. during weekdays and between the hours of 10:00 p.m. and 9:00 a.m. on weekends or holidays may also be subject to noise control requirements. Approval to continue work during these hours may be revoked at any time the Contractor exceeds the Contracting Agency's noise control regulations or complaints are received from the public or adjoining property owners regarding the noise from the Contractor's operations. The Contractor shall have no claim for damages or delays should such permission be revoked for these reasons.

Permission to work Saturdays, Sundays, holidays or other than the agreed upon normal straight time working hours Monday through Friday may be given subject to certain other conditions set forth by the Contracting Agency or Engineer. These conditions may include but are not limited to: requiring the Engineer or such assistants as the Engineer may deem necessary to be present during the work; requiring the Contractor to reimburse the Contracting Agency for the costs in excess of straight-time costs for Contracting Agency employees who worked during such times, on non Federal aid projects; considering the work performed on Saturdays and holidays as working days with regards to the contract time; and considering multiple work shifts as multiple working days with respect to contract time even though the multiple shifts occur in a single 24-hour period. Assistants may include, but are not limited to, survey crews; personnel from the Contracting Agency's material testing lab; inspectors; and other Contracting Agency employees when in the opinion of the Engineer, such work necessitates their presence.

Arterial Streets

No work will be performed on arterial streets during the peak traffic hours of 7:00 a.m. – 9:00 a.m. and 3:30 p.m. – 6:00 p.m., except emergency work to restore services, unless a City-approved traffic control plan allows work during the peak hours. The following streets are classified as arterials:

STREET	***FROM***	***TO***
Central Way/NE 85th St	Market St	132nd Ave NE
Juanita Dr NE /NE Juanita Dr	NE 143rd St (City Limits)	98th Ave NE
Juanita Woodinville Way	100th Ave NE	NE 145th St (City Limits)
Lake St/Lake Washington Blvd/Northup Wy	Central Way	Northup Way (City Limits)
Kirkland Ave/Kirkland Way	Lake St	NE 85th St
Lakeview Dr /NE 68th St/NE 70th St	Lake Washington Blvd	132nd Ave NE
Market St/98th Ave NE/100th Ave NE	Central Way	NE 145th St (City Limits)
NE 116th St	98th Ave NE	Slater Ave NE
NE 120th St/132nd Ave NE	Slater Ave NE	NE 60th St (City Limits)
NE 124th St	100th Ave NE	East City Limits
NE 128th St	116th Ave NE/116th Way NE	120th Ave NE
Simonds Rd NE	92nd Ave NE (City Limits)	100th Ave NE
Slater Ave NE	NE 116th St	NE 124th St
Totem Lake Blvd	NE 132nd St	124th Ave NE
3rd Street/State Street	Central Way	NE 68th Street/Lakeview Dr.
6th St/6th St S/108th Ave NE	Central Way/NE 85th St	South City Limits
90th Ave NE/NE 131st Way/NE 132nd St	NE 134th St	132nd Ave NE
120th Ave NE/116th Ave NE/116th Way NE	NE 112th St	NE 132nd St
124th Ave NE	NE 85th St	NE 124th St
124th Ave NE	NE 132nd St	NE 145th Pl (City Limits)

(November 30, 2018 APWA GSP)

1-08.1 Subcontracting

Delete the eighth paragraph.

(1/1/2016 COK GSP)

1-08.1 Subcontracting

Section 1-08.1 is supplemented with the following:

A Subcontractor or an Agent to the Subcontractor will not be permitted to perform any work under the contract until the following documents have been completed and submitted to the Engineer:

1. Request to Sublet Work (form 421-012).

2. Statement of Intent to Pay Prevailing Wages (Form 700-029-000).

The Contractor's records pertaining to the requirements of this Special Provision shall be open to inspection or audit by representatives of the Department during the life of the contract and for a period

of not less than three years after the date of acceptance of the contract. The Contractor shall retain these records for that period. The Contractor shall also guarantee that these records of all Subcontractors and Agents shall be open to similar inspection or audit for the same period.

(1/1/2016 COK GSP)

1-08.3 Progress Schedule

The order of work will be at the Contractor's option, in keeping with good construction practice and the terms of the contract. All work shall be carried out in accordance with the requirements of the City of Kirkland in compliance with the plans and specifications. However, the Contractor shall so schedule the work within the time constraints noted in the various contract documents, including any permits. The Contractor is cautioned to review said documents and permits and schedule the work appropriately as no additional compensation will be made to the Contractor due to the time constraints imposed by such documents.

(March 13, 2012 APWA GSP)

1-08.3(2)A Type A Progress Schedule

Revise this section to read:

The Contractor shall submit **3** copies of a Type A Progress Schedule no later than 2 weeks prior to the preconstruction conference, or some other mutually agreed upon submittal time. The schedule may be a critical path method (CPM) schedule, bar chart, or other standard schedule format. Regardless of which format used, the schedule shall identify the critical path. The Engineer will evaluate the Type A Progress Schedule and approve or return the schedule for corrections within 15 calendar days of receiving the submittal.

(March 13, 2012 APWA GSP)

1-08.3(2)B Type B Progress Schedule

Revise the first paragraph to read:

The Contractor shall submit a preliminary Type B Progress Schedule 2 weeks prior to the preconstruction conference. The preliminary Type B Progress Schedule shall comply with all of these requirements and the requirements of Section 1-08.3(1), except that it may be limited to only those activities occurring within the first 60-working days of the project.

Revise the first sentence of the second paragraph to read:

The Contractor shall submit 3 copies of a Type B Progress Schedule depicting the entire project no later than 2 weeks prior to the preconstruction conference.

(******)

Special Schedule Limitations

In-water work can only occur during the in-water work window in accordance with environmental permits: **City of Kirkland Determination of Non-Significance (SEP20-00213)** **Washington Department of Fish and Wildlife Hydraulic Project Approval (2020-4-720+01)** **Department of the Army Corps of Engineers Authorization (NWS-2020-347)** **Refer to Appendix A for Permits.**

(July 23, 2015 APWA GSP)

1-08.4 Prosecution of Work

Delete this section in its entirety, and replace it with the following:

1-08.4 Notice to Proceed and Prosecution of Work

Notice to Proceed will be given after the contract has been executed and the contract bond and evidence of insurance have been approved and filed by the Contracting Agency. The Contractor shall not commence with the work until the Notice to Proceed has been given by the Engineer. The Contractor shall commence construction activities on the project site within ten days of the Notice to Proceed Date, unless otherwise approved in writing. The Contractor shall diligently pursue the work to the physical completion date within the time specified in the contract. Voluntary shutdown or slowing of operations by the Contractor shall not relieve the Contractor of the responsibility to complete the work within the time(s) specified in the contract.

When shown in the Plans, the first order of work shall be the installation of high visibility fencing to delineate all areas for protection or restoration, as described in the Contract. Installation of high visibility fencing adjacent to the roadway shall occur after the placement of all necessary signs and traffic control devices in accordance with 1-10.1(2). Upon construction of the fencing, the Contractor shall request the Engineer to inspect the fence. No other work shall be performed on the site until the Contracting Agency has accepted the installation of high visibility fencing, as described in the Contract.

(November 30, 2018 APWA GSP)

1-08.5 Time for Completion

Revise the third and fourth paragraphs to read:

Contract time shall begin on the first working day following <u>the Notice to Proceed Date</u>.

Each working day shall be charged to the contract as it occurs, until the contract work is physically complete. If substantial completion has been granted and all the authorized working days have been used, charging of working days will cease. Each week the Engineer will provide the Contractor a statement that shows the number of working days: (1) charged to the contract the week before; (2) specified for the physical completion of the contract; and (3) remaining for the physical completion of the contract. The statement will also show the nonworking days and any partial or whole day the Engineer declares as unworkable. Within 10 calendar days after the date of each statement, the Contractor shall file a written protest of any alleged discrepancies in it. To be considered by the Engineer, the protest shall be in sufficient detail to enable the Engineer to ascertain the basis and

amount of time disputed. By not filing such detailed protest in that period, the Contractor shall be deemed as having accepted the statement as correct. If the Contractor is approved to work 10 hours a day and 4 days a week (a 4-10 schedule) and the fifth day of the week in which a 4-10 shift is worked would ordinarily be charged as a working day then the fifth day of that week will be charged as a working day whether or not the Contractor works on that day.

Revise the sixth paragraph to read:

The Engineer will give the Contractor written notice of the completion date of the contract after all the Contractor's obligations under the contract have been performed by the Contractor. The following events must occur before the Completion Date can be established:

1. The physical work on the project must be complete; and

2. The Contractor must furnish all documentation required by the contract and required by law, to allow the Contracting Agency to process final acceptance of the contract. The following documents must be received by the Project Engineer prior to establishing a completion date:

    a. Certified Payrolls (per Section 1-07.9(5)).

    b. Material Acceptance Certification Documents

    c. Monthly Reports of Amounts Credited as DBE Participation, as required by the Contract Provisions.

    d. Final Contract Voucher Certification

    e. Copies of the approved "Affidavit of Prevailing Wages Paid" for the Contractor and all Subcontractors

    f. A copy of the Notice of Termination sent to the Washington State Department of Ecology (Ecology); the elapse of 30 calendar days from the date of receipt of the Notice of Termination by Ecology; and no rejection of the Notice of Termination by Ecology. This requirement will not apply if the Construction Stormwater General Permit is transferred back to the Contracting Agency in accordance with Section 8-01.3(16).

    g. ***Property owner releases per Section 1-07.24***

(1/1/2016 COK GSP)

Section 1-08.5 is supplemented with the following:

This project shall be substantially completed in its entirety within **110** working days.

(1/1/2016 COK GSP)

1-08.9 Liquidated Damages

The third paragraph of Section 1-08.9 is revised to read as follows:

Accordingly, the Contractor agrees:

1. To pay (according to the following formula) liquidated damages for each working day beyond the number of working days established for Physical Completion, and

2. To authorize the Engineer to deduct these liquidated damages from any money due or coming to the Contractor.

LIQUIDATED DAMAGES FORMULA

For C > $50,000 → LD = 0.15 × C ÷ T, and
For C ≤ $50,000 → LD = 0.30 × C ÷ T.

Where:
LD = liquidated damages per working day (rounded to the nearest dollar)
C = original Contract amount
T = original time for Physical Completion

(August 14, 2013 APWA GSP)

1-08.9 Liquidated Damages

Revise the fourth paragraph to read:

When the Contract Work has progressed to Substantial Completion as defined in the Contract. The Engineer may determine that the work is Substantially Complete. The Engineer will notify the Contractor in writing of the Substantial Completion Date. For overruns in Contract time occurring after the date so established, the formula for liquidated damages shown above will not apply. For overruns in Contract time occurring after the Substantial Completion Date, liquidated damages shall be assessed on the basis of direct engineering and related costs assignable to the project until the actual Physical Completion Date of all the Contract Work. The Contractor shall complete the remaining Work as promptly as possible. Upon request by the Project Engineer, the Contractor shall furnish a written schedule for completing the physical Work on the Contract.

1-09 MEASUREMENT AND PAYMENT

1-09.2 Weighing Equipment

(July 23, 2015 APWA GSP, Option 1)

1-09.2(1) General Requirements for Weighing Equipment

Revise the third paragraph to read:

Scale Operations – "Contractor-provided scale operations" are defined as operations where a scale is set up by the Contractor specifically for the project and most, if not all, material weighed on the scale is utilized for Contract Work. In this situation, the Contractor shall provide, set up, and maintain the scales necessary to perform this Work. The Contracting Agency will provide a person to operate the project scale, write tickets, perform scale checks and prepare reports.

(July 23, 2015 APWA GSP, Option 2)

1-09.2(1) General Requirements for Weighing Equipment

Revise item 4 of the fifth paragraph to read:

4. Test results and scale weight records for each day's hauling operations are provided to the Engineer daily. Reporting shall utilize WSDOT form 422-027, Scaleman's Daily Report, unless the printed ticket contains the same information that is on the Scaleman's Daily Report Form. The scale operator must provide AM and/or PM tare weights for each truck on the printed ticket.

(1/1/2016 COK GSP)

1-09.2(1) General Requirements for Weighing Equipment

The second to last paragraph of Section 1-09.2(1) is supplemented with the following:

Trucks and Tickets

All tickets shall, at a minimum, contain the following information:

7. Ticket serial number
8. Date and hour of weighing
9. Weigher's identification

Duplicate tally tickets shall be prepared to accompany each truckload of materials delivered to the project.

It is the responsibility of the Contractor to see that tickets are given to the Inspector on the project for each truckload of material delivered. Pay quantities will be prepared on the basis of said tally tickets, delivered to the Inspector at time of delivery of materials. Tickets not collected at the time of delivery will not be honored for payment.

(May 2, 2017 APWA GSP)

1-09.2(5) Measurement

Revise the first paragraph to read:

Scale Verification Checks – At the Engineer's discretion, the Engineer may perform verification checks on the accuracy of each batch, hopper, or platform scale used in weighing contract items of Work.

(October 10, 2008 APWA GSP)

1-09.6 Force Account

Supplement this section with the following:

The Contracting Agency has estimated and included in the Proposal, dollar amounts for all items to be paid per force account, only to provide a common proposal for Bidders. All such dollar amounts are to become a part of Contractor's total bid. However, the Contracting Agency does not warrant expressly or by implication that the actual amount of work will correspond with those estimates. Payment will be made on the basis of the amount of work actually authorized by Engineer.

1-09.7 Mobilization

Supplement this section with the following:

(******)

Mobilization/demobilization shall include, but not be limited to, the following items: the movement of the Contractor's personnel, equipment, supplies, and incidentals to and from the project site; the establishment of the Contractor's office, buildings, and other facilities necessary for work on the project; providing sanitary facilities for the Contractor's personnel; obtaining permits or licenses not furnished by the Owner required to complete the project; and other work and operations that must be performed or costs that must be incurred.

No measurement shall be taken for Work in this Section.

Payment will be made for the following bid item:

Bid Item 1 “Mobilization”	Lump Sum

(March 13, 2012 APWA GSP)

1-09.9 Payments

Supplement this section with the following:

Lump sum item breakdowns are not required when the bid price for the lump sum item is less than $10,000.

(March 13, 2012 APWA GSP)

1-09.9 Payments

Delete the first four paragraphs and replace them with the following:

The basis of payment will be the actual quantities of Work performed according to the Contract and as specified for payment.

The Contractor shall submit a breakdown of the cost of lump sum bid items at the Preconstruction Conference, to enable the Project Engineer to determine the Work performed on a monthly basis. A breakdown is not required for lump sum items that include a basis for incremental payments as part of the respective Specification. Absent a lump sum breakdown, the Project Engineer will make a determination based on information available. The Project Engineer’s determination of the cost of work shall be final.

Progress payments for completed work and material on hand will be based upon progress estimates prepared by the Engineer. A progress estimate cutoff date will be established at the preconstruction conference.

The initial progress estimate will be made not later than 30 days after the Contractor commences the work, and successive progress estimates will be made every month thereafter until the Completion Date. Progress estimates made during progress of the work are tentative, and made only for the purpose of determining progress payments. The progress estimates are subject to change at any time prior to the calculation of the final payment.

The value of the progress estimate will be the sum of the following:

1. Unit Price Items in the Bid Form — the approximate quantity of acceptable units of work completed multiplied by the unit price.

2. Lump Sum Items in the Bid Form — based on the approved Contractor’s lump sum breakdown for that item, or absent such a breakdown, based on the Engineer’s determination.

3. Materials on Hand — 100 percent of invoiced cost of material delivered to Job site or other storage area approved by the Engineer.

4. Change Orders — entitlement for approved extra cost or completed extra work as determined by the Engineer.

Progress payments will be made in accordance with the progress estimate less:

1. Retainage per Section 1-09.9(1), on non FHWA-funded projects;

2. The amount of progress payments previously made; and

3. Funds withheld by the Contracting Agency for disbursement in accordance with the Contract Documents.

Progress payments for work performed shall not be evidence of acceptable performance or an admission by the Contracting Agency that any work has been satisfactorily completed. The determination of payments under the contract will be final in accordance with Section 1-05.1.

(1/1/2016 COK GSP)

Unless otherwise agreed to by both parties, the work period shall coincide with the calendar month. A check will be mailed or made available to the Contractor no later than thirty (30) days following the last day of the work period.

(November 30, 2018 APWA GSP)

1-09.11(3) Time Limitation and Jurisdiction

Revise this section to read*:*

For the convenience of the parties to the Contract it is mutually agreed by the parties that any claims or causes of action which the Contractor has against the Contracting Agency arising from the Contract shall be brought within 180 calendar days from the date of final acceptance (Section 1-05.12) of the Contract by the Contracting Agency; and it is further agreed that any such claims or causes of action shall be brought only in the Superior Court of the county where the Contracting Agency headquarters is located, provided that where an action is asserted against a county, RCW 36.01.050 shall control venue and jurisdiction. The parties understand and agree that the Contractor's failure to bring suit within the time period provided, shall be a complete bar to any such claims or causes of action. It is further mutually agreed by the parties that when any claims or causes of action which the Contractor asserts against the Contracting Agency arising from the Contract are filed with the Contracting Agency or initiated in court, the Contractor shall permit the Contracting Agency to have timely access to any records deemed necessary by the Contracting Agency to assist in evaluating the claims or action.

(1/1/2016 COK GSP)

1-09.13(3) Claims $250,000 or Less

Delete this Section and replace it with the following:

The Contractor and the Contracting Agency mutually agree that those claims that total $250,000 or less, submitted in accordance with Section 1-09.11 and not resolved by nonbinding Alternative Dispute Resolution (ADR) processes, **provided Contracting Agency agreed to engage such ADR processes,** shall be resolved through litigation unless the parties mutually agree in writing to resolve the claim through binding arbitration.

(November 30, 2018 APWA GSP)

1-09.13(3)A Administration of Arbitration

Revise the third paragraph to read:

The Contracting Agency and the Contractor mutually agree to be bound by the decision of the arbitrator, and judgment upon the award rendered by the arbitrator may be entered in the Superior Court of <u>the</u>

county in which the Contracting Agency's headquarters is located, provided that where claims subject to arbitration are asserted against a county, RCW 36.01.050 shall control venue and jurisdiction of the Superior Court. The decision of the arbitrator and the specific basis for the decision shall be in writing. The arbitrator shall use the Contract as a basis for decisions.

1-10 TEMPORARY TRAFFIC CONTROL

(1/1/2016 COK GSP)

1-10.2 Traffic Control Management

1-10.2(1) General

Supplement this section with the following:

For the purposes of bidding, contractors shall assume that the sidewalk and parking areas will open to the public at all times and will not be available for contractor use. The contractor will not be permitted to park equipment or materials in the sidewalk or parking areas. The project site will contain all the contractor's equipment and materials within the site at all times. Contractor will provide flagging to protect the public from contractor activities, allow trucking deliveries/exportation through the construction access roads as shown in the project drawings.

1-10.2(2) Traffic Control Plans

The first and second sentences of Section 1-10.2(2) are deleted and replaced with the following:

The Contractor shall submit a traffic control plan or plans showing a method of handling traffic including pedestrian and bicycle traffic. All construction signs, flaggers, spotters and other traffic control devices shall be shown on the traffic control plan(s) except for emergency situations.

(4/18/2018 COK GSP)

1-10.3 Traffic Control Labor, Procedures, and Devices

1-10.3(3)C Portable Changeable Message Sign

Supplement this section with the following:

Two Portable Changeable Message Signs (PCMS) shall be provided for the duration of the project. Proposed locations shall be shown on Traffic Control Plan(s) submitted by the contractor. Contractor shall submit proposed message(s) to be displayed and receive approval by the Engineer prior to placement. Contractor is responsible for programming of the approved message into the PCMS('s), set-up, placement, and removal upon project completion.

1-10.5 Payment

Supplement this section with the following:

(*****)

1-10.5(1) Lump Sum Bid for Project (No Unit Items)

Supplement this section with the following:

(******)

No measurement shall be taken for Work in this Section.

Payment will be made for the following bid item:

Bid Item 6 “Project Temporary Traffic Control”	Lump Sum

The lump sum contract price for Project Temporary Traffic Control shall be full payment for furnishing all materials, tools, labor, and equipment needed to prepare, secure approval for, and implement the Contractor’s traffic control plan. This shall include, but not be limited to, the labor cost for all flaggers, traffic control supervisors, and other personnel charged with implementation of the Contractor’s traffic control plan as well as all signage, delineators, flash boards, and other temporary materials and equipment needed to safely direct pedestrian, non-motorized vehicle, and motorized vehicle traffic through or around the site, as required by these Contract Documents and the Standard Specifications.

END OF DIVISION 1

GSP DIVISION 2

City of Kirkland

DIVISION 2 – EARTHWORK

2-01 CLEARING, GRUBBING, AND ROADSIDE CLEANUP

2-01.1 Description

Supplement this Section with the following:

(******)

"Strip sod" means removing existing lawn sod to a minimum depth of 4 inches and disposing of all unwanted vegetated matter.

"Selectively clear and grub" means removing non-native vegetation from the surface, such as shrubs and groundcovers, and underground, such as stumps and roots, and disposing of all unwanted vegetated matter. Contractor shall verify non-native material selected for removal with the Owner prior to execution of Work.

The Work shall consist of installing construction and tree protection fencing, installing the temporary access and staging, clearing and grubbing, striping sod, selectively clearing and grubbing, removing and disposing of trees identified for removal, irrigation and drainage materials, benches and site furnishings, and other materials identified in the Plans or in the Specifications to be removed within the established clearing limits. In addition, the Work shall consist of removing and salvaging for reinstallation rock riprap, benches from upland park, a picnic table from upland park, and other materials identified in the Plans or in the Specifications to be removed within the established clearing limits. The Work will also include the partial demolition of existing timber pier elements identified in the Plans or in the Specifications and backfilling of trenches and holes/pits that result from the removal of foundations and other structures below grade. No clearing or removal of items outside the established clearing limits will be allowed.

The Contractor shall protect the existing pier structure to remain outside the Work limit from damage and shall provide temporary stabilization measures as required for a safe working environment.

Items identified to be removed and reinstalled shall be removed in a manner that will prevent damage, stored in a secure area, and reinstalled as indicated.

Demolition work shown in the Plans is schematic in nature and is intended to identify general features of the structures, paving, irrigation and drainage materials, or other obstructions and materials to be removed.

Bidders shall visit the site to verify the quantity and details of demolition work. Lack of complete details in the Plans will not be considered as grounds for additional compensation.

2-01.4 Measurement

Delete this Section and replace with the following:

(******)

No measurement shall be taken for "Clearing, Grubbing and Roadside Cleanup" as it will be paid lump sum.

2-01.5 Payment

Delete this Section and replace with the following:

(******)

All costs for the Work identified on the Plans and completed in accordance with the requirements of this Section shall be made for the following bid items included in the Bid Form.

Payment shall be made for the following bid item:

Bid Item 7 “Clearing, Grubbing and Roadside Cleanup”	Lump Sum

The lump sum price for “Clearing, Grubbing and Roadside Cleanup” shall be full payment for furnishing all materials, tools, labor, and equipment needed to install construction and temporary tree protection fencing, install temporary access and staging. strip sod, selectively clear and grub, remove trees, remove and salvage rock riprap, and to complete Work as described in this Section.

2-02 REMOVAL OF STRUCTURES AND OBSTRUCTIONS

2-02.1 Description

Supplement this Section with the following:

(******)

This Work shall consist of removal for disposal or reinstallation and reuse, where indicated on the Plans, of concrete panel bulkhead, soldier pile concrete bulkhead, stepped bulkhead (concrete stairs), metal guardrail, timber piling, pier decking, and benches.

2-02.3 Construction Requirements

Supplement this Section with the following:

(******)

Any materials deemed by the Engineer to be salvageable material shall be the property of the Owner, and shall, upon removal, be immediately loaded, hauled to a location designated by the Owner, carefully unloaded, and neatly stacked or stored.

All other removed material will become the property of the Contractor and shall be removed from the project and disposed of at a site identified by the Contractor and approved of by the Project Engineer. Disposal of all materials shall be in accordance with applicable State and local regulations.

Structures and materials that are not identified for removal on the Plans or in the Specifications shall remain in place, unless otherwise designated by the Engineer. The Contractor shall be responsible for protecting existing structures and materials that are shown on the Plans or designated by the Engineer to remain. Damaged structures and other items that are designated to remain shall be repaired or replaced by the Contractor at no additional cost to the Owner.

2-02.4 Vacant

Delete this Section and replace it with the following:

(******)

2-02.4 Removal of Shoreline Structures

2-02.4(1) Removal of Shoreline Bulkheads

The Contractor shall remove concrete panel, soldier pile concrete, and stepped bulkheads (concrete stairs) as shown on the Plans and consistent with all applicable regulations, codes, and ordinances. Care shall be taken that demolition work is accomplished such that damage does not occur to adjacent structures or improvements. Any portion of structures or improvements not designated for removal that are damaged by the Contractor shall be repaired or replaced by the Contractor, at the Contractor's expense. Blasting or other special methods for the removal of an existing structure or obstruction will not be permitted.

2-02.4(2) Removal of In-water Debris

The Contractor shall remove all timber piles and pile stub within the in-water debris removal area. The Contractor shall utilize methods, equipment preferences, and best management practices identified in the Washington Department of Natural Resources *Derelict Creosote Piling Removal Best Management Practices for Pile Removal & Disposal* (WDNR 2017). Following pile removal, the Contractor shall fill voids with beach sand.

2-02.4(3) Removal of Pier Decking

Contain demolition within the limits designated to prevent damage to existing structures, utilities, or facilities and prevent debris from falling into the water. All demolition materials, except as noted, shall become the property of the Contractor and shall be completely removed and disposed of by the Contractor. In the event that debris enters the water, immediately remove and dispose of it in accordance with all applicable Federal, State, and local regulations.

2-02.5 Payment

Delete this Section and replace with the following:

(******)

2-02.5(1) Measurement

No measurement shall be taken for "Removal of Structural and Obstructions" as it will be paid lump sum.

2-02.5(2) Payment

Payment shall be made for the following bid item:

Bid Item 8 "Removal of Structures and Obstructions"	Lump Sum

The lump sum price for "Removal of Structures and Obstructions" shall be full payment for furnishing all materials, tools, labor, and equipment needed to remove shoreline bulkheads (including concrete stairs), in-water debris, metal guardrail, benches, and pier decking, and complete Work as described in this Section. Salvaging pier lights and pier ladders is incidental to the Work and shall be included in

this lump sum price. Other pier structure demolition work shall be incidental to Bid Item 23 “Timber Pier Steel Straps”; Bid Item 26 “Timber Pier Repairs – Misc. Metals”; Bid Item 27 “Timber Pier Wood Repairs – Cross Bracing”; Bid Item 28 “Timber Pier Repairs – Pile Caps”; and Bid Item 30 “Timber Pier Repairs – Misc. Timber” and as described in Division 06.

2-03 ROADWAY EXCAVATION AND EMBANKMENT

2-03.1 Description

Supplement this Section with the following:

(******)

The Work described in this Section includes pavement removal, excavation, and disposing of excavated materials as shown on the Plans.

The Plans divide the Work into two areas: base bid work and Additive Alternative A.

2-03.4 Measurement

Delete this Section and replace with the following:

(******)

Bid Item 9 “Roadway Excavation and Embankment” shall be measured by the cubic yard (CY).

Bid Item 10 “Alternate A - Roadway Excavation and Embankment” shall be measured by the CY.

2-03.5 Payment

Delete this Section and replace with the following:

(******)

All costs for the Work identified on the Plans and completed in accordance with the requirements of this Section shall be made for the following bid items included in the Bid Form.

Payment shall be made for the following bid item:

Bid Item 9 “Roadway Excavation and Embankment”	CY

Payment shall be made for the following bid item:

Bid Item 10 “Alternate A - Roadway Excavation and Embankment”	CY

The unit contract prices per CY for “Roadway Excavation and Embankment “ and “Alternative A - Roadway Excavation and Embankment” shall include furnishing all materials, tools, labor, and equipment for pavement removal, excavation, and stockpile or haul and disposal of excavated materials to complete Work as described in this Section.

2-06 SUBGRADE PREPARATION

2-06.1 Description

Supplement this Section with the following:

(******)

This Work shall consist of preparing the subgrade including placement and compaction for proposed park features including paving, vegetation, beach areas, retaining walls.

2-06.2 Vacant

Delete this Section and replace with the following:

(******)

2-06.2 Submittals

Submittals shall be made in accordance with Section 1-06.1 and the requirements of this Section. The Contractor shall submit the following for the Engineer's approval:

1. Imported Materials: The Contractor shall submit a particle gradation analysis in graph and table form, based on the sieve sizes in these Specifications, for each product specified. Products specified shall be approved by the Owner prior to being imported to the site.

2. Geotextile: The Contractor shall submit manufacturer data showing that geotextile meets or exceeds the requirements outlined herein for the Project Engineer's review and approval prior to ordering materials.

2-06.3(1) Subgrade for Surfacing

Supplement this Section with the following:

(******)

To prepare the subgrade for proposed park improvements, the Contractor shall compact soil to not less than the following percentages for maximum dry density for soils determined in accordance with ASTM D1557 (Modified Proctor).

1. Backfill:

    a. Utility pipe zone materials – 95 percent

    b. Utility trench backfill (paved area) – 95 percent

    c. Utility trench backfill (unpaved area) – 95 percent

    d. Irrigation pipe zone materials below pipe – 95 percent

    e. Irrigation pipe backfill over pipe – hand tamp to 80 percent

    f. General landscape backfill – 80 percent maximum

    g. Overexcavation backfill of existing subgrade to remain – 95 percent

2. Subgrades:

    a. Subgrade soils in paving areas – 90 percent

    b. Compacted subgrade under concrete structures – 95 percent

    c. Import aggregate base in paving areas – 95 percent

    d. Subgrade for topsoil and soil amendments (planted/seeded areas) – 80 percent maximum

2-06.5 Measurement

Delete this Section and replace with the following:

(******)

No measurement shall be taken for “Subgrade Preparation” as it will be paid lump sum.

2-06.6 Payment

Delete this Section and replace with the following:

(******)

All costs for the Work identified on the Plans and completed in accordance with the requirements of this Section shall be made for the following bid items included in the Bid Form.

Payment shall be made for the following bid item:

Bid Item 11 “Subgrade Preparation”	Lump Sum

The lump sum price for “Subgrade Preparation” shall be full payment for furnishing all materials, tools, labor, and equipment needed to prepare and compact subgrade materials for placement of proposed park features and complete the Work as described in this Section.

2-09 STRUCTURE EXCAVATION

2-09.1 Description

Supplement this Section with the following:

(******)

This Work shall consist of excavation; installation, maintenance, and removal of shoring; dewatering of excavated areas; and placement and compaction of bedding and backfill materials for the structures specified in Division 6.

Add the following new Section:

(******)

2-09.1(1) Submittals

Submittals shall be made in accordance with Section 1-06.1 and the requirements of this Section. The Contractor shall submit the following for the Engineer's approval:

1. Source information and sieve analysis test results for gravel backfill for foundations.

2-09.3 Construction Requirements

2-09.3(1) General Requirements

2-09.3(1)C Removal of Unsuitable Base Material

Supplement this Section with the following:

(******)

Do not overexcavate unless directed by the Engineer. Backfill authorized overexcavation with gravel backfill for foundations, according to Section 9-03.12(1)A of the Standard Specifications, and compact the gravel backfill according to Section 2-06.3, as directed by the Engineer.

2-09.3(1)F Items to Remain

Supplement this Section with the following:

(******)

Structures and materials that are not identified for removal on the Plans or in the Specifications shall remain in place, unless otherwise designated by the Engineer. The Contractor shall be responsible for protecting existing structures and materials that are shown on the Plans or designated by the Engineer to remain.

2-09.3(4) Construction Requirements, Structure Excavation, Class B

Supplement this Section with the following:

(******)

Excavation for structures to be installed as part of the project shall provide at least 1 foot of clearance between the neat lines of the outside surfaces of the structure and the undisturbed earth bank. Shoring shall be required for all structure excavations more than 4 feet deep, unless otherwise approved by the Engineer. All shields and trench boxes shall be certified by the manufacturer as complying with the applicable laws and regulations for such devices. The Contractor shall also be responsible for the safety of workers in accordance with Section 1-07.1. The Contractor shall provide necessary safety systems to protect workers from rocks and debris that may fall into excavations.

2-09.4 Measurement

Delete this Section and replace with the following:

(******)

No measurement shall be taken for "Structure Excavation" as it will be paid lump sum.

2-09.5 Payment

Delete this Section and replace with the following:

(******)

All costs for the Work identified on the Plans and completed in accordance with the requirements of this Section shall be made for the following bid items included in the Bid Form.

Payment shall be made for the following bid item:

Bid Item 12 “Structure Excavation”	Lump Sum

The lump sum price for “Structure Excavation” shall be full payment for furnishing all materials, tools, labor, and equipment needed for the excavation; installation, maintenance, and removal of shoring; dewatering of excavated areas for the structures to complete Work as described in this Section.

2-11 TRIMMING AND CLEANUP

2-11.1 Description

Supplement this Section with the following:

(******)

This Work shall consist of the following, as shown on the Plans or as directed by the Engineer:

1. Cleaning finished surfaces of refuse and debris
2. Removing loose rocks from finished surfaces
3. Restoring fences, sign and posts, and other park property
4. Removing flagging, temporary fencing, and other temporary construction facilities

2-11.3 Construction Requirements

Supplement this Section with the following:

(******)

The Contractor shall clean and restore all finished surfaces disturbed by the Work, as directed by the Engineer. The Contractor shall remove all weeds, brush, refuse, debris, and loose rocks from finished surfaces. The Contractor shall also remove all flagging, construction fencing, temporary erosion and sediment control features, and other temporary facilities. Roadway surfaces adjacent to the site and sidewalks and other hard surfaces within the site shall be cleaned using a vacuum sweeper, as directed by the Engineer.

2-11.5 Payment

Delete this Section and replace with the following:

(******)

All costs for the Work identified on the Plans and completed in accordance with the requirements of this Section shall be incidental to the Division 02 bid items included in the Bid Form. No separate payment will be made.

END OF DIVISION 2

GSP DIVISION 3

City of Kirkland

DIVISION 3 – AGGREGATE PRODUCTION AND ACCEPTANCE

3-01 PRODUCTION FROM QUARRY AND PIT SITES

3-01.2 Material Sources, General Requirements

Supplement this Section with the following:

(******)

No source of material has been provided for any materials necessary for the construction of these improvements. If the sources of materials provided by the Contractor necessitate hauling over roads other than city, county, or State Rights-of-Way, the Contractor shall make all arrangements for use of the haul routes at no cost to the Owner.

3-01.5 Measurement

Delete this Section and replace with the following:

(******)

No measurement will be made for Work in this Section.

3-01.6 Payment

Delete this Section and replace with the following:

(******)

No payment will be made for Work in this Section. All costs associated with acquiring, producing, and placing aggregate and rock materials shall be incidental to the Contract prices for the bid items for various aggregate and rock materials included in Divisions 4 and 8.

END OF DIVISION 3

GSP DIVISION 4

City of Kirkland

DIVISION 4 – BASES

4-04 BALLAST AND CRUSHED SURFACING

4-04.1 Description

Supplement this Section with the following:

(******)

Crushed surfacing on this project shall be used for:

1. Aggregate base course for paved areas, including sidewalks and pathways.
2. Aggregate base course for retaining walls, mowing strip, concrete thickened edge, concrete stairs, and granite steps.

As shown on the Plans or as directed by the Engineer.

The Plans divide the Work into two areas: base bid work and Additive Alternative A.

4-04.2 Materials

Section 4-04.2 is supplemented with the following:

(******)

Materials shall meet the following requirements:

- Crushed Surfacing: Section 9-03.9(3) of the Standard Specifications (Top Course and Base Course)

4-04.4 Measurement

Delete this Section and replace with the following:

(******)

Bid Item 13 ”Aggregate Base Course for Paved Areas, Including Sidewalks and Pathways” shall be measured by the cubic yard (CY).

Bid Item 14 ”Alternate A - Aggregate Base Course for Paved Areas Within Alternate A Area” shall be measured by the CY.

Bid Item 15 “Crushed Surfacing Top Course for Retaining Walls and Stairs” shall be measured by the CY.

4-04.5 Payment

Delete this Section and replace with the following:

(******)

All costs for the Work identified on the Plans and completed in accordance with the requirements of this Section shall be made for the following bid items included in the Bid Form.

Payment shall be made for the following bid item:

Bid Item 13 “Aggregate Base Course for Paved Areas, Including Sidewalks and Pathways”	CY

Payment shall be made for the following bid item:

Bid Item 14 “Alternate A - Aggregate Base Course for Paved Areas Within Alternate A Area”	CY

Payment shall be made for the following bid item:

Bid Item 15 “Crushed Surfacing Top Course for Retaining Walls and Stairs”	CY

The unit contract prices per CY for Bid Items 12, 13, and 14 shall include full payment for furnishing all materials, tools, labor, and equipment needed to procure, place, and compact crushed surfacing for paved areas, retaining walls, and stairs to complete the Work as described in this Section. Water utilized to reach optimal moisture content shall be considered incidental to the bid item.

END OF DIVISION 4

GSP DIVISION 5

City of Kirkland

DIVISION 5 – SURFACE TREATMENTS AND PAVEMENTS

5-05 CEMENT CONCRETE PAVEMENT

Add the following new Section:

(******)

5-05.3(8)E Sawcut Control Joints

The Contractor shall establish a proposed control joint layout plan as soon as the concrete can take foot traffic. The concrete joint pattern shall be saw-cut with an early entry concrete saw when the concrete has cured enough to provide a clean saw-cut edge. In slabs on grade, saw-cut control joints to true, straight lines, with a maximum variance from a true line of 1/4 inch in 10 feet and no irregularities across the joint in excess of 1/8 inch. Extend reinforcing steel through and lap beyond control joints.

Add the following new Section:

(******)

5-05.3(8)F Isolation Joints

The Contractor shall establish a proposed control joint layout plan as soon as the concrete can take foot traffic. Locate expansion joints as noted on the Plans.

The Contractor shall provide sealant filler conforming to the requirements of Section 9-04.2 for expansion joints abutting concrete curbs, catch basins, manholes, inlets, structures, walks, and other fixed objects, unless otherwise indicated. Extend joint fillers full width and depth of joint and not less than 1/2 inch or more than 1 inch below finished surface where joint sealer is indicated. Furnish joint fillers in one-piece lengths for full width being placed, wherever possible. Where more than one length is required, lace or clip joint filler sections together. Protect the top edge of the joint filler during concrete placement with a metal or plastic temporary strip. Remove protection after concrete has been placed on both sides of joint before sealant is applied. Install polyurethane sealant in a continuous, smooth joint, wiping excess sealant from adjacent concrete.

Provide expansion joints not more than 30 feet apart in footings. Run no reinforcement or other metal trim continuous through joints, unless otherwise indicated.

5-05.4 Measurement

Delete this Section and replace with the following:

(******)

Measurement will not be taken for Work in this Section.

5-05.5 Payment

Delete this Section and replace with the following:

(******)

All costs for the Work identified on the Plans and completed in accordance with the requirements of this Section shall be incidental to Bid Item 38 “Cement Concrete Sidewalk” and Bid Item 39 “Alternate A Cement Concrete Sidewalk Within Alternate A Area”, as described in Division 8 and included in the Bid Form. Sawcutting, regardless of depth, shall be incidental to the bid items, as described in Division 8. No separate payment will be made.

END OF DIVISION 5

GSP DIVISION 6

City of Kirkland

DIVISION 6 – STRUCTURES

6-01 GENERAL REQUIREMENTS FOR STRUCTURES

6-01.01 Description

Supplement this Section with the following:

(******)

The Work shall consist of concrete, steel, and timber structures. Concrete structures include:

- Concrete wall Types 1, 2, and 3
- Concrete thickened edge
- Concrete mowstrip
- Concrete north stair
- Concrete south stair including cast-in-place and precast concrete

Steel structures include:

- Timber pier pile straps
- Timber pier repairs with metal components
- Guardrail
- Handrail

Timber structures include:

- Timber pier repairs for crossing bracing
- Timber pier repairs for pile caps
- Timber pier wood repairs
- Bullrails on timber pier

6-01.9 Working Drawings

Supplement this Section with the following:

(******)

The Contractor shall provide a shop drawing submittal of proposed concrete retaining wall profiles identifying top of wall elevation, location and dimension of wall steps, top footing elevation, and footing depth for review and acceptance.

6-02 CONCRETE STRUCTURES

6-02.2 Materials

Supplement this Section with the following:

(******)

1. "Epoxy Grout" – Use SeaShield 550 Epoxy Grout by Denso North America. Install grout as specified by the manufacturer.

2. "Trowel Finish Grout" – Use SeaShield 526 Epoxy by Denso North America. Install grout as specified by the manufacturer.

6-02.3 Construction Requirements

6-02.3(28)E Finishing

Supplement this Section with the following:

(******)

Provide a medium-broomed finish, perpendicular to the primary direction of travel, to the tops of exposed steps on concrete stairs.

6-02.3(28)F Tolerances

Supplement this Section with the following:

(******)

All scheduled penetrations/blockouts shall be located within 1/4 inch in any direction of location dimensioned on the Plans. Step panel geometry shall be within 1/4 inch of dimension provided in the Plans.

6-02.4 Measurement

Delete this Section and replace with the following:

(******)

Bid Item 16 "Concrete Walls – Type 1" shall be measured in lineal feet (LF).

Bid Item 17 "Concrete Walls – Type 2" shall be measured in LF.

Bid Item 18 "Concrete Walls – Type 3" shall be measured in LF.

Bid Item 19 "Concrete Thickened Edge" shall be measured in LF.

Bid Item 20 "Concrete Walls – Mow Strip" shall be measured in LF.

No measurement will be made for Bid Item 21 "Concrete Stairs – North Stair" as it will be lump sum.

No measurement will not be taken for Bid Item 22 "Concrete Stairs – South Stair" as it will be lump sum.

6-02.5 Payment

Delete this Section and replace with the following:

(******)

All costs for the Work identified on the Plans and completed in accordance with the requirements of this Section shall be made for the following bid items included in the Bid Form.

Payment shall be made for the following bid item:

Bid Item 16 “Concrete Walls – Type 1”	LF

Payment shall be made for the following bid item:

Bid Item 17 “Concrete Walls – Type 2”	LF

Payment shall be made for the following bid item:

Bid Item 18 “Concrete Walls – Type 3”	LF

Payment shall be made for the following bid item:

Bid Item 19 “Concrete Walls – Thickened Edge”	LF

Payment shall be made for the following bid item:

Bid Item 20 “Concrete Walls – Mow Strip”	LF

Payment shall be made for the following bid item:

Bid Item 21 “Concrete Stairs – North Stair”	Lump Sum

Payment shall be made for the following bid item:

Bid Item 22 “Concrete Stairs – South Stair”	Lump Sum

The unit contract prices per LF for Bid Items 16, 17, 18, 19, and 20 shall include furnishing all materials, tools, labor, and equipment needed to complete the Work as described in this Section and identified on the Plans. The Work shall include forming, placement of steel reinforcement, placement of concrete, finishing concrete, curing, concrete form removal, and all other work associated with constructing the retaining walls, thickened edge, and mow strip. All geotextiles, fabrics, perforated pipe, gravel backfill for drains, and other items associated with the retaining walls, thickened edge, and mow strip identified on the Plans and completed in accordance with the requirements of this Section shall be incidental to the unit contract prices for the items listed above.

The lump sum prices for Bid Items 21 and 22 shall include furnishing all materials, tools, labor, and equipment needed to complete the Work as described in this Section and identified on the Plans. The Work shall include forming, placement of steel reinforcement, placement of concrete, finishing concrete, curing, concrete form removal, crushed aggregate (crushed rock surfacing top course for the north stair

and AASHTO #4 and #57 for the south stair), and all other work associated with constructing the retaining each set of stairs. All geotextiles, fabrics, and other items associated with the stairs identified on the Plans and completed in accordance with the requirements of this Section shall be incidental to the unit contract prices for the items listed above.

6-03 STEEL STRUCTURES

6-03.1 Description

Supplement this Section with the following:

(******)

The Work includes structural steel used for timber pier repairs, guardrails, and handrails.

6-03.2 Materials

Supplement this Section with the following:

(******)

Structural Steel

The following materials shall be considered structural steel (see Section 9-06):

- ASTM A 36
- ASTM A 53 Gr. B
- ASTM A 572 Gr. 50
- ASTM A 500 Gr B
- ASTM A276 Type 316

The above structural steel grades shall be used for the steel members and components as specified in the structural details and Structural Steel notes in the Plans. A exposed steel surfaces, excluding stainless steel, shall be hot-dipped galvanized in conformance with ASTM A 123, A 143, A 153, A 384, and A 385, as indicated on the Plans. Hot-dip galvanize items after fabrication as far as practical. Restore galvanizing damaged by welding or handling with a field-applied galvanizing compound in accordance with ASTM A 780, Annex A1, 12 mils minimum thickness.

Bolts, Nuts, and Washers

1. Anchor rods shall conform to ASTM F 1554 Grade 55.

2. Economy bolts, hex head bolts, and other bolts shall conform to ASTM A 307 Grade A.

3. Nuts shall conform to ASTM A 563, Heavy Hex.

4. Malleable iron washers shall be used under all nut and bolt heads bearing on timber, except under the heads of economy bolts. Washers bearing against other materials shall conform to F 436.

5. In addition to standard hex nuts, provide lock nuts at all bolted connections.

6. Bolts, nuts, and washers shall be hot-dipped galvanized in accordance with structural steel materials listed above, as applicable.

6-03.3 Construction Requirements

Supplement this section with the following:

All welding shall be performed by a WABO certified welder. All steel fabrication shall be performed by a WABO certified fabrication facility.

6-03.4 Measurement

Delete this Section and replace with the following:

(******)

Bid Item 23 “Timber Pier Steel Straps” shall be measured per each unit assembly.

No measurement shall be taken for Bid Item 24 “Guardrail” as it will be lump sum.

Bid Item 25 “Handrail” shall be measured per lineal foot (LF) and shall be measured along the top rail.

No measurement will be made for Bid Item 26 “Timber Pier Repairs – Misc. Metals” as it will be paid on a lump sum basis.

6-03.5 Payment

Delete this Section and replace with the following:

(******)

All costs for the Work identified on the Plans and completed in accordance with the requirements of this Section shall be made for the following bid items included in the Bid Form.

Payment shall be made for the following bid item:

Bid Item 23 “Timber Pier Steel Straps”	Per Each Unit Assembly

Bid Item 23 “Timber Pier Steel Straps”, each, shall be full pay for each assembly and include all materials, hardware, labor, tools, incidentals, and equipment necessary to fabricate, transport, fasten, and install each pile to cap strap connection as identified on the Plans. Existing pier steel strap demolition and disposal is incidental to unit contract price.

Payment shall be made for the following bid item:

Bid Item 24 “Guardrail”	Lump Sum

Bid Item 24 “Guardrail", lump sum. The lump sum contract price shall be full pay for each assembly and include all materials, hardware, labor, tools, incidentals, and equipment necessary to fabricate, transport, and install guardrail as identified on the Plans.

Payment shall be made for the following bid item:

Bid Item 25 “Handrail”	LF

Bid Item 25 “Handrail", per lineal foot. The unit price shall be full pay per lineal foot of handrail and include all materials, hardware, labor, tools, incidentals, and equipment necessary to fabricate, transport, and install handrail as identified on the Plans.

Payment shall be made for the following bid item:

Bid Item 26 “Timber Pier Repairs – Misc. Metals”	Lump Sum

Bid Item 26 “Timber Pier Repairs – miscellaneous metals", per lump sum. The lump sum price shall be full pay for all cost associated with miscellaneous metal fabrications required at the timber pier included in the Plans, not captured under other bid items. Lump sum price shall include all materials, labor, tools, and equipment necessary to manufacture, fabricate, transport, and install all remaining miscellaneous metals. The lump sum includes all incidental work for existing pier demolition. Disposal required to complete Work is incidental to lump sum price.

6-04 TIMBER STRUCTURES

6-04.1 Description

Supplement this Section with the following:

(******)

The Work includes timber pier repairs, replacement, and fiber reinforced polymer grating. Contractor shall protect existing pier timber structure while completing the Work.

6-04.2 Materials

Supplement this Section with the following:

(******)

FRP GRATING – see Section 9-19.3

6-04.3 Construction Requirements

6-04.3(10) Caps

Supplement this Section with the following:

(******)

Install Steel Straps per details in the Plans. No drift pin or bolt is required for timber pier repairs.

6-04.4 Measurement

Delete this Section and replace with the following:

(******)

Bid Item 27 “Timber Pier Wood Repairs – Cross Bracing” shall be measured per each brace. Each brace is considered one board and fasteners.

Bid Item 28 “Timber Pier Repairs – Pile Caps and Sub Caps” shall be measured per lineal foot (LF) of cap.

Bid Item 29 “FRP Grating” shall be measured per square foot (SF).

No measurement will be made for Bid Item 30 “Timber Pier Repairs – Misc. Timber”, as it will be paid on a lump sum basis.

Bid Item 31 “Bull rail” shall be measured per LF.

6-04.5 Payment

Delete this Section and replace with the following:

(******)

All costs for the Work identified on the Plans and completed in accordance with the requirements of this Section shall be made for the following bid items included in the Bid Form.

Payment shall be made for the following bid item:

Bid Item 27 “Timber Pier Wood Repairs – Cross Bracing”	Each Unit

The unit price for Bid Item 27 shall be full payment for each timber brace assembly and include all materials, hardware, labor, tools, incidentals, and equipment necessary to transport, install and fasten each timber cross brace as identified on the Plans. Existing pier cross bracing demolition and disposal is incidental to unit contract price. For the purposes of bidding, contractor shall assume that all new hole shall be drilled for the installation of the bracing.

Payment shall be made for the following bid item:

Bid Item 28 “Timber Pier Repairs – Pile Caps and Sub Caps”	LF

The unit price for Bid Item 28 shall be full payment per lineal foot of pile cap replacement and sub cap installation, including all materials, hardware, steel fabrications, labor, tools, incidentals, and equipment necessary to transport, install and fasten replacement caps as identified on the Plans. Existing pile cap demolition and disposal is incidental to unit contract price. Contractor shall protect all existing members from damages during repairs; if the contractors activities damage members not identified as being replaced, they shall replace the members with equivalent materials at no additional expense to the contracting agency.

Payment shall be made for the following bid item:

Bid Item 29 “FRP Grating”	SF

The unit price for Bid Item 29 shall be full payment per square foot of grating and include all materials, hardware, fabrications, labor, tools, incidentals, and equipment necessary to transport, cut, shim, install and fasten all FRP grating flush to meet ADA requirements, including access hatch, as identified on the Plans.

Payment shall be made for the following bid item:

Bid Item 30 “Timber Pier Repairs – Misc. Timber”	Lump Sum

The lump sum price for Bid Item 30 shall be full payment for all cost associated with miscellaneous timbers including blocking, new fascia around the entire perimeter of the pier, and other timber items noted on the Plans, not captured under other bid items. Lump sum price shall include all materials, hardware, labor, tools, and equipment necessary to manufacture, fabricate, transport, fasten and install all remaining miscellaneous timber items. Existing timber demolition and disposal required to complete Work is incidental to the lump sum contract price for this item.

Payment shall be made for the following bid item:

Bid Item 31 “Bull rail”	LF

The unit price shall be full pay per lineal foot of new bull rail installation including all materials, hardware, labor, tools, incidentals, and equipment necessary to transport, install and fasten replacement caps as identified on the Plans.

END OF DIVISION 6

GSP DIVISION 7

City of Kirkland

DIVISION 7 – DRAINAGE STRUCTURES, STORM SEWERS, SANITARY SEWERS, WATER MAINS, AND CONDUITS

No modifications to this division.

END DIVISION 7

GSP DIVISION 8

City of Kirkland

DIVISION 8 – MISCELLANEOUS CONSTRUCTION

8-01 EROSION CONTROL AND WATER POLLUTION CONTROL

8-01.1 Description

Section 8-01.1 is supplemented with the following:

(******)

Implementation of appropriate Temporary Erosion and Sediment Control (TESC) Best Management Practices (BMPs) at the appropriate construction phases is very important to prevent siltation of the subgrade, aggregate courses, and final permeable pavement. The Contractor shall install and maintain all temporary and permanent erosion control measures and BMPs in accordance with the Contract Documents, Standard Specifications, Permit Conditions, the approved "Stormwater Pollution Prevention Plan" (SWPPP), and as directed by the Engineer prior to clearing, grubbing, or grading or as necessary, as clearing and grading progress. Such measures shall include, but are not necessarily limited to:

- Straw mulch, netting, and tackifier
- Temporary drainage swales
- Sediment traps
- Stabilized construction entrance/exit
- Inlet protection on existing and proposed drainage structures
- Reinforced silt fencing
- Plastic covering
- Disposal of sediments and materials
- TESC seeding
- Maintenance of BMPs including in the event of emergencies and as weather and field conditions dictate; and also including installation of additional BMPs which may become required as field and weather conditions evolve.
- Street sweeping and cleaning
- ESC Lead per 8-01 of the Standard Specifications
- All materials, tools, and equipment necessary to meet these requirements

The Contractor shall provide erosion control as required for all stockpiled materials at no cost to the Contracting Agency. The Engineer, in the event of an emergency, and as weather and field conditions dictate, may require additional erosion controls and BMPs.

Site Specific BMPs and SWPPP Plan

Temporary Erosion/Water Pollution Control notes and performance criteria are noted in the Contract Documents. The Owner has prepared a SWPPP for the project. The Contractor shall be responsible for implementing the SWPPP and meeting the conditions of the construction stormwater general permit. The Contractor shall submit any requested changes to the SWPPP provided in the Contract Documents to the Owner for review and approval prior to the commencement of clearing, grubbing, or grading activities.

Water quality testing and discharge volume reporting required by the project permits shall be performed by the Contractor as outlined in the approved SWPPP. The reporting data shall be provided to the Engineer as soon as practical, at regular intervals and prior to reporting deadlines established in the permits. The Contractor will provide a copy of the reporting information within 24 hours of a request to do so by the Engineer. All costs to perform these reporting requirements are to be included in the lump sum Contract price for "Erosion/Water Pollution Control."

8-01.2 Materials

Supplement this Section with the following:

(******)

Materials shall meet the requirements of the following Sections:

Habitat Gravel	9-13.6(1) (Special Provision)
Beach Sand	9-13.6(2) (Special Provision)
Cobble	9-03.11(2)
Salvaged Rock	9-13.7(3) (Special Provision)
Granite Steps	9-13.7(4) (Special Provision)
Light Loose Riprap	9-13.1(3)
Quarry Spalls	9-13.1(5)
Biodegradable Coir Fabric	9-14.6(2)A
Unanchored Driftwood	9-14.6(10) (Special Provision)
Anchored Log with Rootwad	9-14.6(11) (Special Provision)
Jute Matting	9-14.6(12) (Special Provision)
Temporary Tree Protection Fencing	9-16.1(1)G) (Special Provision)
Vinyl Sheetpile	9-19.2 (Special Provision)
Geotextile	9-33.2(1)

(June 20, 2017 COK GSP)

8-01.3 Construction Requirements

Section 8-01.3 is supplemented with the following:

(******)

The Contractor shall bear sole responsibility for damage to completed portions of the project and to property located off the project caused by erosion, siltation, runoff, or other related items during the construction of the project. The Contractor shall also bear sole responsibility for any pollution of rivers, streams, lakes, groundwater, or other water that may occur as a result of construction operations.

Any area not covered with established, stable vegetation where no further work is anticipated for a period of 15 days shall be immediately stabilized with the approved erosion and sedimentation control methods (e.g., seeding and mulching, straw). Where seeding for temporary erosion control is required,

fast germinating grasses shall be applied at an appropriate rate (e.g., perennial rye applied at approximately 80 pounds per acre).

At no time shall more than 1 foot of sediment be allowed to accumulate within a catch basin. All catch basins and conveyance lines shall be cleaned at a time designated by the Contracting Agency's Construction Inspector.

The cleaning operation shall not flush sediment-laden water into the downstream system. The cleaning shall be conducted using an approved vacuum truck capable of jet rodding the lines. The collection and disposal of the sediment shall be the responsibility of the Contractor at no cost to the Contracting Agency.

8-01.3(1) General

8-01.3(1)A Submittals

Section 8-01.3(1)A is supplemented with the following:

(******)

Stormwater Pollution Prevention Plan

The Contractor shall review and provide requested modifications to the SWPPP prepared by the Owner and included in the Contract Documents, in accordance with Department of Ecology requirements.

The Contractor shall incorporate the SWPPP implementation schedule into the Contractor's progress schedule. Requested modifications to the SWPPP and implementation schedule shall be submitted in accordance with Sections 1-05.3 and 1-08.3.

In addition, the Contractor shall submit a plan for procedures to be used to prevent high pH stormwater, as outlined in the SWPPP. The plan shall include how the pH of the water will be maintained between pH 6.5 and pH 8.5 prior to being discharged from the project or entering surface waters. Prior to beginning any concrete or grinding work, the Contractor shall submit the plan for the Engineer's review and approval.

The SWPPP is considered a "living" document that shall be revised to account for additional erosion control/pollution prevention BMPs as they become necessary and are implemented in the field during project construction. A copy of the most current SWPPP shall remain on site at all times and an additional copy shall be forwarded to the Engineer. At the Contractor's preference, revisions to the SWPPP may be forwarded to the Engineer rather than submitting a complete document. Revisions to the SWPPP may be kept on site in a file along with the original SWPPP document.

(June 20, 2017 COK GSP)

8-01.3(1)B Erosion and Sediment Control (ESC) Lead

Supplement the second paragraph with the following:

(******)

3. Inspecting all on-site erosion and sediment control BMPs at least once every five working days and within 24 hours of every runoff event. A SWPPP Inspection report or form shall be prepared for each inspection and shall be included in the SWPPP file. A copy of each SWPPP Inspection report or form shall be submitted to the Engineer no later than the end of the next working day following the inspection. The report or form shall include, but not be limited to the following:

    a. When, where, and how BMPs were installed, maintained, modified, and removed.

b. Observations of BMP effectiveness and proper placement.

c. Recommendations for improving future BMP performance with upgraded or replacement BMPs when inspections reveal SWPPP inadequacies.

d. Approximate amount of precipitation since last inspection and when last inspection was performed.

4. Updating and maintaining a SWPPP file on site that includes, but is not limited to the following:

a. SWPPP Inspection Reports or Forms.

b. SWPPP narrative.

c. Other applicable permits.

8-01.3(1)C Water Management

Section 8-01.3(1)C is supplemented with the following:

(******)

The Contractor will be responsible for meeting the SWPPP requirements.

Bid Item 32 Erosion Control and Water Pollution Control shall include the cost of providing temporary detention/retention facilities as illustrated in the approved SWPPP as well as modifications, additions and removals of such facility as dictated by the Contractor's sequence of work and may include, but are not limited to:

1. Temporary detention/retention facilities such as ponds, Baker Tanks, or other facilities.

2. If any permanent stormwater facilities are utilized for SWPPP compliance, the Contractor shall remove accumulated sediment and clean the facility prior to final acceptance at no additional cost to the Contracting Agency.

3. Temporary construction entrances.

No additional compensation shall be made for construction, alteration, removal, maintenance, and any additional requirements necessary for "Erosion/Water Pollution Control". No additional compensation shall be made for conflicts with existing or proposed improvements or construction sequencing of work when facilities are utilized to meet permit requirements.

8-01.3(1)C7 Turbidity Curtain

This Section is supplemented with the following:

(******)

Prior to demolition, excavation, and filling in indicated areas along the shoreline, the Contractor shall install an In-water Turbidity Curtain along the affected sections of shoreline, as show on the Plans.

Adjoining sections of In-water Turbidity Curtain shall be connected in accordance with manufacturer's recommendations. Seams adjoining adjacent sections of In-water Turbidity Curtain shall connect the entire height of curtain such that there are no openings in the skirt. Each end of In-water Turbidity Curtain shall be located at or landward of the Ordinary High Water elevation on the shoreline. The In-water Turbidity Curtain shall be tethered and anchored in place at each end with 3/16-inch-diameter

polyethylene rope tied securely to the top of the TESC Turbidity Curtain and to an onshore anchor. The In-water Turbidity Curtain shall be tethered in place waterward of the Work area, as shown on the Plans. The Contractor shall use 3/16-inch-diameter polyethylene rope tied securely to as many concrete or steel anchors as needed to hold the In-water Turbidity Curtain in place. The anchor shall consist of 1-inch-diameter steel pipe pounded at least 12 inches into undisturbed soils or a concrete block of sufficient size to hold the curtain in place.

8-01.3(3) Placing Erosion Control Blanket

Add the following new Section:

(******)

8-01.3(3)A Jute Matting Fabric

Immediately following the establishment of the finished grade, jute matting shall be unrolled parallel to the flow of water in upland landscaping areas with slopes exceeding a 4:1 slope (not including areas with brush layering as described in Section 8-01.3(6)G). Where more than one strip of jute matting is required to cover the given area, it shall overlap the adjacent mat by a minimum of 4 inches. The upslope end of each strip of jute matting shall be staked and buried in a 6-inch-deep trench with the soil firmly tamped against the mat. Three Douglas fir stakes (in accordance with Section 8-02.3) per width of matting (one stake at each overlap) shall be driven below the finish ground line prior to backfilling of the trench. The Owner may require that any other edge exposed to more than normal flow of water or strong prevailing winds be staked and buried in a similar manner.

The edges of jute matting shall be buried around the edges of catch basins and other structures. Jute matting must be spread evenly and smoothly, and must be in contact with the soil at all points.

Jute matting shall be held in place by approved Douglas fir stakes driven vertically into the soil. The matting shall be fastened at intervals not more than 3 feet apart in three rows for each strip of the matting and blanket, with one row along each edge and one row alternately spaced in the middle. All ends of the matting and blanket and check slots shall be fastened at 24-inch intervals across their width. The lengths of fastening devices shall be sufficient to securely anchor the matting against the soil, and the fastening devices shall be driven flush with the finished grade.

Add the following new Section:

(******)

8-01.3(3)B Biodegradable Coir Fabric for Brush Layering

Immediately following the establishment of the subgrade in the brush layering area, biodegradable coir fabric shall be unrolled parallel to the flow of water for the first lift of topsoil. The biodegradable coir fabric shall extend into the slope to the dimension shown on the Plans and shall wrap around a topsoil lift to the depth shown on the Plans. Following the placement of the first biodegradable coir fabric and topsoil lift, the planting material shall be installed per the Plans and in accordance with Section 8-02.3(15)C, followed by the next lift.

Where more than one strip of jute matting is required to horizontally cover the given area, it shall overlap the adjacent mat by a minimum of 4 inches prior to the placement of topsoil.

8-01.4 Measurement

Delete this Section and replace with the following:

(******)

No measurement shall be made for Bid Item 32 “Erosion Control and Water Pollution Control” as it will be paid lump sum.

8-01.5 Payment

Delete this Section and replace with the following:

(******)

All costs for the Work identified on the Plans and completed in accordance with the requirements of this Section shall be made for the following bid items included in the Bid Form.

Payment shall be made for the following bid item:

Bid Item 32 “Erosion Control and Water Pollution Control”	Lump Sum

The lump sum price for Bid Item 32 “Erosion Control and Water Pollution Control” shall be full payment for furnishing all materials, tools, labor, and equipment needed to prepare the contractor’s requested revisions to the TESC plan and SWPPP, secure approval for those revisions, implement all TESC BMPs, comply with the provisions of the Construction Stormwater Permit for the project, and complete the Work as described in this Section. Payment for brush layering including procurement and installation of fabrics shall be under Bid Item 33 “PISP - Planting.”

8-02 ROADSIDE RESTORATION

8-02.1 Description

Supplement this Section with the following:

(******)

This Work shall consist of the furnishing, hauling, and placement of topsoil and mulch, along with the furnishing, hauling, protection, and planting of trees, shrubs, groundcovers, ornamental and grasses, seeding, mulching, and all related Work in accordance with these Specifications and as shown on the Plans or as directed by the Engineer. This Work shall include the guarantee and replacement of all non-surviving plants within the plant establishment and guarantee period. Trees, shrubs, groundcovers, and ornamental and grasses will hereinafter be referred to collectively as “plants” or “plant material.”

Add the following new Section:

(******)

8-02.1(1) Definitions

<u>Plants/Plant Materials:</u> Plants and plant materials shall include any live plant material used on the project. This includes but is not limited to container grown, balled and burlapped (B&B), or bare root plants, and livestakes.

Container Grown: Container grown plants are those whose root balls are enclosed in a pot or bag in which that plant grew.

Add the following new Section:

(******)

8-02.1(2) Submittals

Submittals shall be made in accordance with Section 1-06.1 and the requirements of this Section. The Contractor shall submit the following items to the Owner for review/acceptance:

1. Within 45 days of Contract Award, the Contractor shall submit a complete list of plant materials proposed to be provided, demonstrating conformance with the requirements specified. The names and addresses of all growers and nurseries shall be included.

2. The Contractor shall submit documentation to the Owner, at least 30 days prior to start of Work under this Section, that plant materials have been ordered. A procedure shall be arranged for inspection of plant material with the Owner at the time of submission.

3. The Contractor shall have copies of vendors' or growers' invoices or packing slips for all plants on site during installation. Each invoice or packing slip should list species by scientific name, quantity, and date delivered (and genetic origin if that information was previously requested).

Add the following new Section:

(******)

8-02.1(3) Quality Assurance

Plant material shall meet the following quality assurance criteria:

1. Plants shall meet or exceed the specifications of Federal, State, and local laws requiring inspection for plant disease and insect control.

2. Plants shall be healthy, vigorous, and well formed, with well developed, fibrous root systems, free from dead branches or roots. Plants shall be free from damage caused by temperature extremes, lack or excess of moisture, insects, disease, and mechanical injury. Plants in leaf shall be well foliated and of good color. Plants shall be habituated to the outdoor environmental conditions into which they will be planted (hardened off).

3. Trees with damaged, crooked, multiple, or broken leaders will be rejected. Woody plants with abrasions of the bark or sunscald will be rejected.

4. Plant nomenclature shall conform to *Flora of the Pacific Northwest*, by Hitchcock and Cronquist, University of Washington Press, 1973; and/or to *A Field Guide to the Common Wetland Plants of Western Washington & Northwestern Oregon*, ed. Sarah Spear Cooke, Seattle Audubon Society, 1997.

5. The Landscape Contractor shall submit documentation that specified plant materials have been ordered and secured. A list of supplier names, addresses, phone numbers, and the storage/growing location of the materials shall be submitted to the Engineer within 30 days of Contractor Award.

Add the following new Section:

(******)

8-02.1(4) Substitutions

The following shall apply to required plant material substitutions:

1. It is the Contractor's responsibility to obtain specified materials in advance if special growing, marketing, or other arrangements must be made in order to supply specified materials.

2. Substitution of plant materials not on the project list will not be permitted unless authorized in writing by Owner.

3. If proof is submitted that any plant material specified is not obtainable, a proposal will be considered for use of the nearest equivalent size or alternative species, with corresponding adjustment of Contract price.

4. Such proof will be substantiated and submitted in writing to the Owner within 30 days of Contractor Award.

Add the following new Section:

(******)

8-02.1(5) Inspection

Plant material and installation inspections by the Engineer will include:

1. Plants must be guaranteed to be true to scientific name and specified size, and to be healthy and capable of vigorous growth.

2. Plants shall conform to sizes specified unless substitutions are made as outlined in this Contract.

3. Where a range of size is given, no plant shall be less than the minimum size, and at least 50 percent of the plants shall be as large as the median of the size range (e.g., if the size range is 12 to 18 inches, at least 50 percent of plants must be 15 inches tall).

4. Height and spread dimensions specified refer to the main body of a plant and not branch or root tip to tip. Plant dimensions shall be measured when branches or roots are in their normal position.

5. Plants shall be subject to inspection and acceptance by the Engineer for conformance to specifications, either at time of delivery on site or at the grower's nursery. Approval of plant materials at any time shall not impair the subsequent right of inspection and rejection during progress of the Work.

6. Plants inspected on site and rejected for not meeting specifications must be removed immediately from site or red-tagged and removed as soon as possible.

7. The Owner may elect to inspect plant materials at the place of growth. After inspection and acceptance, the Engineer may require that the inspected plants be labeled and reserved for the project. Substitution of these plants with others, even of the same species and size, is unacceptable.

Add the following new Section:

(******)

8-02.1(6) Delivery, Handling, and Storage

Requirements for delivery, handling, and storage of plant materials include:

1. The Contractor must notify the Owner 48 hours or more in advance of deliveries so that the Engineer may arrange with their representative for inspection.

2. Transportation: During shipping, plants shall be packed to provide protection against climate extremes, breakage, and drying. Proper ventilation and prevention of damage to bark, branches, and root systems must be ensured.

3. Scheduling and Storage: Plants shall be delivered as close to the time of planting as possible. Plants in storage must be protected against any condition that is detrimental to their continued health and vigor.

4. Handling: Plant materials shall not be handled by the trunk, limbs, or foliage but only by the container, ball, box, or other protective structure, except bare root plants, which shall be kept in bundles until planting and then handled carefully by the trunk or stem.

5. Labels: Plants shall have durable, legible labels stating the correct scientific name and size. A total of 10 percent of container grown plants in individual pots shall be labeled. Plants supplied in flats, racks, boxes, bags, or bundles shall have one label per group.

Add the following new Section:

(******)

8-02.1(7) Warranty

Plant materials shall include the following warranties:

1. Plants not surviving after 1 year shall be replaced by the Contractor at no cost to the Owner.

8-02.2 Materials

Supplement this Section with the following:

(*****)

Materials shall meet the requirements of the following Sections:

Topsoil	9-14.2(1) (Special Provision)
Lawn Seed Mix	9-14.3(1) (Special Provision)
Fertilizer	9-14.4
Mulch and Amendments	9-14.5

Plants shall be nursery grown in accordance with good horticultural practices under climatic conditions similar to or more severe than those of the project site. Plants shall be true to species and variety or subspecies. No cultivars or named varieties shall be used unless specified as such.

For plant material requirements, refer to the Plans' plant schedule.

Root treatment shall be as follows:

1. Container Grown Plants (including Plugs): Plant root balls must hold together when the plant is removed from the pot, except that a small amount of loose soil may be on the top of the root ball.

2. Plants must not be root-bound; there must be no circling roots present in any plant inspected.

3. Root balls that have cracked or broken when removed from the container shall be rejected.

8-02.3 Construction Requirements

8-02.3(3) Weed and Pest Control

8-02.3(3)A Chemical Pesticides

Delete this Section.

(******)

8-02.3(5) Roadside Seeding, Lawn and Planting Area Preparation

8-02.3(5)C Planting Area Preparation

Supplement this Section with the following:

(******)

Preparation of subgrade shall be as follows:

1. Rip, disc, or scarify subgrade soils to a minimum depth of 12 inches. Subgrade elevations shall be 2 inches below finished grade in planted or seeded areas receiving topsoil/planting soil amendment.

Fine grading shall be as follows:

1. Perform fine grading to attain finish grades as shown on the Plans.

2. Rake out all rocks, roots, sticks, and other debris larger than 1-inch diameter or sticks longer than 3 inches. Leave the surface even and readily able to accommodate lawn or planting installation. Refer to Division 2 – Earthwork for compaction.

3. Any exposed tree roots in cut slopes shall be neatly pruned at the finish grade and the cuts treated with an approved sealer.

8-02.3(7) Layout of Planting, Lawn, and Seeding Areas

Supplement this Section with the following:

(******)

The Contractor is responsible for determining required quantities of plant material to complete the landscape plan as shown on the Plans.

The Contractor shall place the plant(s) as illustrated on the Plans starting from the perimeter of the planting area and progressing to the center, and shall adjust odd dimensions at the center. Install plants as indicated on the Plans using an on-center triangular spacing pattern. The dimension from the centerline of the first row of shrubs or groundcover, or beach grasses to the edge of the planting bed, shall be one-half the normal plant spacing shown on the Plans.

The Owner reserves the option of selecting and inspecting plant material at the nursery. The Contractor shall provide the Owner with at least 1 week notice prior to preparing plants for shipping.

The Contractor shall locate all plant materials by placing all trees and shrubs in their actual locations or marking each location with wood stakes or colored wire flags marked with the plant symbol. No planting holes shall be dug or backfilled without express approval of the Engineer. The Engineer shall reserve the right to adjust the locations of landscape elements during the installation period as appropriate to the job. After plant installation, stakes or flags used to mark plant location shall be removed.

Plants shall be located as indicated or as approved in the field by the Engineer. If obstructions are encountered that are not shown on the Plans, the Contractor shall not proceed with planting operations until alternate plant locations have been selected. Tree locations shall be adjusted to clear all overhead lines and structures.

8.02-3(8) Planting

8-02.3(8)B Plant Installation

Supplement this Section with the following:

(******)

The Contractor shall install planting material in planting pits as detailed on the Plans. Planting shall be performed only by experienced workers familiar with native plant planting procedures under the supervision of a qualified supervisor.

Circular planting pits shall be excavated with vertical sides. The depth of each pit shall accommodate the root system. The diameter of each pit shall be a minimum of three times the diameter of the container to be planted. The sides of the pit shall be scarified. Trees shall be handled by the root ball, not by the trunk. Burlap and wire shall remain intact until plantings are set in their positions within each planting pit. All wire, twine, burlap, and non-organic materials shall be removed from the root ball before backfilling. Plantings shall be planted upright and held rigidly in position until soil has been backfilled and tamped firmly around the root ball or root structure. No filling shall be permitted around trunks or stems. Frozen or muddy mixtures shall not be used for backfilling. Plant material that settles or otherwise moves from an upright and level position during the construction and guarantee period shall be repositioned or replanted as required.

When the planting pit is backfilled halfway, the specified quantity of fertilizer shall be placed (see Section 8-02.3(9)C Supplement), as shown on the Plans. Planting topsoil shall be carefully placed, watered, and compacted, filling all voids. The root system shall not be injured. Amended soil shall be placed and compacted carefully to avoid injury to roots; and all voids shall be filled. When pit is three-quarters backfilled, it shall be completely filled with water and water shall be allowed to soak away. The pits shall be filled with additional soil to finish grade. The Contractor shall begin regular irrigation immediately after planting.

8-02.3(9) Seeding, Fertilizing, and Mulching

8-02.3(9)C Seeding with Fertilizers and Mulches

Supplement this Section with the following:

(******)

Prior to completing the backfill of the plant pits, the Contractor shall place BioPaks® equidistant around the root ball of the tree. The number of BioPaks® shall be as specified by the manufacturer's installation guidelines. The BioPaks® shall be installed not less than 1 inch and not more than 4 inches below the finished grade and approximately 2 inches from root tips. The Engineer will be notified when BioPaks® are installed.

8-02.3(13) Plant Establishment

Supplement this Section with the following:

(******)

Upon completion of plantings, the Contractor shall request an inspection by the Engineer. The Engineer will then make an inspection and either accept the plantings or make a list noting remaining items to be corrected or completed to conform to the Contract Documents. The Contractor shall then complete or correct all items and request another inspection. Upon written acceptance by the Engineer, the plant establishment period will begin.

The Contractor shall maintain all plant materials covered under this Contract for a period of 1 year from acceptance of proper plantings installation. During this period, the Contractor shall maintain a healthy growing condition for all plant materials through watering, pruning, weeding, and other necessary maintenance operations. Plants shall be inspected by the Contractor at least once per week and maintenance performed promptly. Planting beds shall be kept free of all weeds, grass, and other undesirable vegetation growth. Invasive, non-native weeds and plants shall be removed and disposed of off site for the first year following installation. Removal of all weeds and invasive vegetation within the planting area shall be completed a minimum of three times during the growing season; once each in April, June, and September. Dead or impaired plants shall be replaced promptly during specified planting seasons. Maintenance period plant substitution as approved by the Engineer will be allowed at the time of placement. If determined necessary by the Engineer, plant protection from herbivores will be required.

All plant material shall be guaranteed for a period of 1 year after final acceptance, at which time a final inspection of the Work will be completed jointly by the Contractor and the Engineer. Defective materials shall be replaced in like kind and size. The Owner will certify final acceptance in writing.

8-02.3(14) Plant Replacement

Supplement this Section with the following:

(******)

Final acceptance of project planting will be certified, in writing, by the Owner.

Add the following new Section:

(******)

8-02.3(17) Tree Protection

1. Protection within the Drip Line:

   Where existing trees are within the area of Work, or where existing trees outside the area of Work have drip lines extending into the area of Work, the Contractor shall employ all methods to minimize adverse impact to these existing trees including limbs and roots. The Contractor shall notify the Owner of any construction work within the drip line of trees at least 1 working day before the scheduled activity. These methods may include, but are not limited to:

   a. Temporary 6-foot-tall chain link construction fencing.

   b. Temporary tie-up of low limbs.

   c. Application of a 4- to 6-inch-thick layer of mulch (or wood chips salvaged from clearing and grubbing operations) within the drip line of trees.

   d. Timber or steel planking for protection of surface roots from equipment.

   e. Tree root pruning or other tree root treatment as directed by the Engineer.

   No storage of equipment or materials shall be allowed within the drip line of trees not designated for removal. Steel planking, or timber planking made of 4-inch-thick material, each plank covering a minimum of 8 square feet, shall be used to support backhoe and other equipment stabilizers when set within the drip line of a tree or sodded planting strip.

   Where sidewalk, curb, and pavement removal and placement operations occur that impact tree roots 2 inches or greater in diameter, the Owner will determine how these tree roots are to be handled.

2. Above-grade Work:

   When the Contractor anticipates construction operations that will unavoidably affect tree limbs, the Contractor shall notify the Owner at least 5 working days in advance of commencing such operations.

   a. Before trimming any trees, the Contractor shall notify the Owner of the proposed method and the amount of trimming required.

   b. Trimming shall be done by a professional tree service company whose past and current performance is in accordance with National Arborist Association tree-pruning standards.

3. Trenching and Tunneling within the Drip Line:

   Excavation or tunneling of any kind within the “critical root zone,” as defined by the tree drip line, will not be allowed unless the Contractor requests permission to do so at least 2 working days in advance, and receives approval from the Owner.

4. Treatment of Roots: Excavation around roots 2 inches in diameter and greater requires handwork.

   a. Individual tree roots 2 inches or greater in diameter shall not be cut, but rather protected when within the drip line of the tree.

   b. Tree roots smaller than 2 inches in diameter shall be cleanly cut flush with the edge of the trench or tunnel.

c. Ripping or tearing of tree roots will not be allowed.

5. Repair, Replacement, and Payment for Damage:

   Trees or other plant material not ordered or designated to be removed but that are destroyed or irreparably damaged by Contractor operations, as determined by the Owner, shall be repaired or replaced by the Contractor in accordance with the Owner's recommendations.

   a. Replacements shall be of the same species and, as nearly as possible, of the same size as the trees to be replaced.

   b. The Contractor shall allow 1 working day advance notice for inspection of nursery stock replacements by the Owner.

6. Payment: In addition to the Contractor's restoration approved by the Owner, the Contractor will be assessed damages for the difference in the dollar value of the damaged tree, shrub, or other plant material, and the dollar value of the replacement.

   a. The dollar value will be determined by the Owner from the "Guide for Establishing Values of Trees and Other Plants," prepared by the Council of Tree and Landscape Appraisers, current edition. Damages assessed will be deducted from moneys due or that may become due to the Contractor.

   Planting of replacement stock shall be done in accordance with the requirements of the Contract Documents during the first fall or spring planting period, whichever comes first.

Add the following new Section:

(******)

8-02.3(18) Anchored Logs with Rootwads

Place and anchor logs with rootwads on the beach surface as shown on the Plans and/or as directed by the Engineer.

Add the following new Section:

(******)

8-02.3(19) Unanchored Driftwood

Place unanchored driftwood on the beach surface as shown on the Plans and/or as directed by the Engineer.

8-02.4 Measurement

Delete this Section and replace with the following:

(******)

No measurement shall be made for Bid Item 33 "PSIP - Planting", as it will be paid on a lump sum basis.

No measurement shall be made for Bid Item 34 "PSIP - Seeding", as it will be paid on a lump sum basis.

No measurement shall be made for temporary tree protection fencing. Refer to Division 02 and Bid Item 7 “Clearing, Grubbing and Roadside Cleanup” for temporary tree protection fencing measurement.

Bid Item 35 “Anchored Log with Rootwad” shall be measured by each procured and installed anchored log with rootwad.

Bid Item 36 “Unanchored Driftwood” shall be measured by each procured and installed unanchored driftwood.

8-02.5 Payment

Delete this Section and replace with the following:

(******)

Payment shall be made for the following bid items:

Bid Item 33 “PSIP - Planting”	Lump Sum

The lump sum price for Bid Item 33 shall include full payment for all materials, tools, labor, and equipment needed to complete all planting including brush layering. This shall include full payment for furnishing all materials, tools, labor, and equipment necessary to install topsoil, amendments, fertilizer, and mulch in the planting areas as shown in the Drawings. Procurement and installation of all fabrics associated with planting shall be incidental to this bid item, including the labor and material to construct brush layering as shown on the Plans. Work shall include installation of plantings and all materials, tools, labor, and equipment needed to assure survivorship for the one-year warranty period.

Payment shall be made for the following bid item:

Bid Item 34 “PSIP - Seeding”	Lump Sum

The lump sum price for Bid Item 34 shall include full payment for all materials, tools, labor, and equipment needed to prepare and install seed and to assure survivorship for the one-year warranty period. This shall include full payment for furnishing all materials, tools, labor, and equipment necessary to install topsoil, amendments, and fertilizer in the seeded areas as shown in the Drawings. This shall include maintenance mowing during the one-year warranty period.

Payment shall be made for the following bid item:

Bid Item 35 “Anchored Log with Rootwad”	Each

The contract unit price for Bid Item 35 shall include full payment for all materials, tools, labor and equipment needed to procure and install each anchored log with rootwad, including all hardware and labor for buried anchors.

Payment shall be made for the following bid item:

Bid Item 36 “Unanchored Driftwood”	Each

The contract unit price for Bid Item 36 shall include full payment for all materials, tools, labor and equipment needed to procure and install each piece of unanchored driftwood.

No separate payment shall be made for tree protection or installation of tree protection fencing as described in this section. All costs for materials, tools, labor, and equipment associated with tree protection and installation of tree protection fencing shall be incidental to the lump sum price for Bid Item 7 “Clearing, Grubbing and Roadside Cleanup”.

8-03 IRRIGATION

8-03.3 Construction Requirements

Supplement this Section with the following:

(******)

All local, municipal, and State laws, rules, and regulations governing or relating to any of this Work are hereby incorporated into and made part of these specifications and their provisions shall be carried out by the Contractor. Anything contained in these specifications shall not be construed to conflict with above mentioned rules, regulations, or requirements. Where conflict may occur, rules, regulations or requirements of the governing code shall be adhered to. However, when these Specifications and/or Plans call for or describe materials, workmanship, or construction of a better quality, higher standard, or larger size, these Specifications and/or Plans shall take precedence over the requirements of said rules, regulations, and codes.

All materials and equipment shall be installed in a neat and professional manner. The Owner or Owner's representative reserves the right to direct removal and replacement of any items, which in their opinion do not present an orderly and neat or professional appearance. Such removal and replacement shall be done, when directed in writing, at Contractor's expense without additional cost to Owner.

8-03.3(3) Piping

Supplement this Section with the following:

(******)

Install all pipe with label facing up.

8-03.3(4) Jointing

Supplement this Section with the following:

(******)

Use of pipe dope is not permitted. Materials shall include the P-70 (purple) primer and cement weld on 705 or 711 (grey).

8-03.3(7) Flushing and Testing

Supplement this Section with the following:

(******)

Main line shall be tested with isolation valves fully open, and control valve flow control in operating (open) condition.

8-03.3(10) As-Built Plans

Supplement this Section with the following:

(******)

Dimension against fixed points the following system components: sleeves, valves, quick couplers, and splice locations.

8-03.4 Measurement

Delete this Section and replace with the following:

(******)

No measurement shall be made for Bid Item 37 “Irrigation” as it will be paid lump sum.

8-03.5 Payment

Delete this Section and replace with the following:

(******)

All costs for the Work identified on the Plans and completed in accordance with the requirements of this Section shall be made for the following bid items included in the Bid Form:

Payment shall be made for the following bid item:

Bid Item 37 “Irrigation”	Lump Sum

The lump sum price for Bid Item 37 shall include full payment for all materials, tools, labor, and equipment needed to procure and install irrigation and complete the Work in accordance with the requirements of this Division. The Work shall include excavation, backfill, and compaction for all trenching.

8-14 CEMENT CONCRETE SIDEWALKS

8-14.4 Measurement

Delete this Section and replace with the following:

(******)

Bid Item 38 “Cement Concrete Sidewalks” shall be measured by the square yard (SY).

Bid Item 39 “Alternate A - Cement Concrete Sidewalks within Alternate A Area” shall be measured by the SY.

8-14.5 Payment

Delete this Section and replace with the following:

(******)

All costs for the Work identified on the base bid and Alternate A Plans and completed in accordance with the requirements of this Section shall be made for the following bid items included in the Bid Form.

Payment shall be made for the following bid item:

Bid Item 38 “Cement Concrete Sidewalks”	SY

The per contract unit price for Bid Item 38 shall include all materials, labor, tools, and equipment needed to install each square yard of cement concrete sidewalks. The Work shall include all cement concrete sidewalk surfaces regardless of cement concrete sidewalk depth and shall include forming, placement of steel reinforcement, joints, finishing, and saw cutting, regardless of depth.

Payment shall be made for the following bid item:

Bid Item 39 “Alternate A - Cement Concrete Sidewalks within Alternate A Area”	SY

The per contract unit price for Bid Item 39 shall include all materials, labor, tools, and equipment needed to install each square yard of cement concrete sidewalks within the Alternate A area, as shown on the Plans and in the Bid Proposal. The Work shall include all cement concrete sidewalk surfaces regardless of cement concrete sidewalk depth and shall include forming, placement of steel reinforcement, joints, finishing, and saw cutting.

8-15 RIPRAP

8-15.2 Materials

Delete this Section and replace with the following:

(******)

Light Loose Riprap 9-13.1

Quarry Spalls 9-13.1(5)

Habitat Gravel 9-13.6(1)

Beach Sand 9-13.6(2)

Rock for Rock Wall 9-13.7

Salvaged Rock 9-13.7(3)

8-15.4 Measurement

Delete this Section and replace with the following:

(******)

Bid Item 40 “Light Loose Riprap” shall be measured by the ton.

Bid Item 41 “Quarry Spalls” shall be measured by the ton.

Bid Item 42 “Habitat Gravel” shall be measured by the ton.

Bid Item 43 “Alternate A - Habitat Gravel within Alternate A Area” shall be measured by the ton.

Bid Item 44 “Beach Sand” shall be measured by the ton.

Bid Item 45 “Rock for Rock Wall” shall be measured by the ton.

Bid Item 46 “Salvaged Rock” shall be measured by the cubic yard (CY).

Bid Item 47 “Cobble” shall be measured by the CY.

8-15.5 Payment

Delete this Section and replace with the following:

(******)

All costs for the Work identified on the Plans and completed in accordance with the requirements of this Section shall be made for the following bid items included in the Bid Form.

Payment shall be made for the following bid item:

Bid Item 40 “Light Loose Riprap”	Ton

Payment shall be made for the following bid item:

Bid Item 41 “Quarry Spalls”	Ton

Payment shall be made for the following bid item:

Bid Item 42 “Habitat Gravel”	Ton

Payment shall be made for the following bid item:

Bid Item 43 “Alternate A - Habitat Gravel within Alternate A Area”	Ton

Payment shall be made for the following bid item:

Bid Item 44 “Beach Sand”	Ton

Payment shall be made for the following bid item:

Bid Item 45 “Rock for Rock Wall”	Ton

Payment shall be made for the following bid item:

Bid Item 46 “Salvaged Rock”	CY

Payment shall be made for the following bid item:

Bid Item 47 “Cobble”	CY

The unit Contract price per ton for Bid Items 40 through 47 shall be full payment for furnishing all materials, labor, tools, and equipment needed to procure and place the materials specified per the Plans. When it is necessary to dump and sort individual material loads, payment will be made only for that portion accepted by the Engineer. Procurement and installation of geotextile and fabrics associated with placement of habitat gravel, rock walls, and salvaged rock shall be incidental to Bid Items 43, 45, and 46.

8-19 VACANT

Delete this Section and replace it with the following:

(******)

8.19 GRANITE STEPS

8-19.1 Description

This Work shall consist of furnishing and installing granite steps.

8-19.2 Materials

Materials shall meet the requirements of the following Sections:

Granite steps 9-13.7(4) (Special Provision)

8-19.3 Construction Requirements

1. Granite stone risers shall be placed on site as shown on the Plans and directed by the Project Engineer. Locations shown in the Contract Documents are approximate. Placement and orientation of each stone shall be as directed by the Owner’s Representative on site.

2. The Contractor shall excavate as needed to place stone risers.

3. Stone risers shall be set so that each step has consistent tread dimensions and riser height. Each riser shall have at least three contact surfaces and shall be set stable, with no rocking.

8-19.4 Measurement

No measurement will be made for Bid Item 48 “Granite Steps” as it will be lump sum.

8-19.5 Payment

All costs for the Work identified on the Plans and completed in accordance with the requirements of this Section shall be made for the following bid items included in the Bid Form.

Payment shall be made for the following bid item:

Bid Item 48 “Granite Steps”	Lump Sum

The lump sum price for Bid Item 48 shall be full payment for all materials, labor, tools, and equipment needed to install granite steps, as shown on the Plans and as described in this section. The Work includes all granite steps including the foundation step. Procurement of geotextile and fabrics associated with the granite steps shall be incidental to Bid Item 48.

8-26 VACANT

Delete this Section and replace it with the following:

(******)

8-26 SHEETPILE WALL

8-26.1 Description

This Work shall consist of furnishing and installing sheetpile wall.

8-26.2 Materials

Materials shall meet the requirements of the following Sections:

Vinyl Sheetpile 9-19.2 (Special Provision)

8-26.3 Vinyl Sheetpile Wall

1. Sheetpiling Fabrication

   a. The individual sheetpiles shall be fabricated in such a manner that they can be interlocked during installation to produce a continuous sheetpile wall, as shown on the Plans.

2. Site Preparation

   a. The Contractor shall establish and stake control points, lines, and grades for proper installation of bulkhead and concrete cap. The Contractor shall verify location of all utilities prior to sheetpile installation and protect them from damage.

3. Installation

   a. Sheetpiling shall be installed by excavating and backfilling. The horizontal and vertical tolerance for the wall is 1 inch of variation per 20 feet of sheetpiling. Each sheetpile shall be lowered into position in the excavated trench and supported by bracing until backfilling is completed. Adjacent sheetpiles shall be interlocked to produce a continuous sheetpile wall.

   b. Backfill material shall be placed in thin 8-inch loose lifts and compacted to at least 90 percent compaction. On-site fill may be several percentage points above its optimum moisture content. Some sorting of the on-site material and/or moisture conditioning (drying) may likely be required to prepare the material for placement and compaction. If field density tests indicate the required percent compaction has not been obtained, the fill material shall be reconditioned as necessary, or replaced and recompacted to the required percent compaction before placing any additional material.

8-26.4 Measurement

Bid Item 49 “Vinyl Sheetpile Wall with Concrete Cap” shall be measured by the lineal foot (LF).

8-26.5 Payment

All costs for the Work identified on the Plans and completed in accordance with the requirements of this Section shall be made for the following bid items included in the Bid Form.

Payment shall be made for the following bid item:

Bid Item 49 “Vinyl Sheetpile Wall with Concrete Cap”	LF

The unit cost for Bid Item 49 shall be full payment for all materials, labor, tools, and equipment needed to procure and install plumb vinyl sheetpile regardless of total height. The unit cost shall include dewatering as needed for the installation. The Work shall also include procurement and installation of the concrete cap including all forming, placement of steel reinforcement, joints, and finish work. The unit contract price shall also include the replacement of backfill using aggregate base. Reuse of on-site material is allowed with Owner approval.

8-27 VACANT

Delete this Section and replace it with the following:

(******)

8-27 SITE FURNISHINGS

8-27.1 Description

This Work shall consist of furnishing and installing new site furnishings and salvaging and re-installing identified existing site furnishings.

8-27.2 Materials

Contractor shall procure new benches. Benches shall be the “Contour Bench” by Columbia Cascade TimberForm (product No. 2140-6): 1-800-547-1940. All benches shall include the 6-foot bench. Benches shall be kiln-dried Douglas-fir slats with black powder-coated steel frame with surface-mounted base. Bench metal color shall be black.

Contractor shall salvage benches and picnic tables as shown on the Plans.

8-27.3 Measurement

No measurement shall be made for Bid Item 50 “Site Furnishings”, as it will be paid on a lump sum basis.

8-27.4 Payment

All costs for the Work identified on the Plans and completed in accordance with the requirements of this Section shall be made for the following bid items included in the Bid Form.

Payment shall be made for the following bid item:

Bid Item 50 “Site Furnishings”	Lump Sum

The lump sump price for Bid Item 50 shall include full payment for salvaging, procurement, and installation and/or re-installation of all site furnishings including concrete slabs and all necessary hardware for surface mount assembly as shown on the Plans.

END OF DIVISION 8

GSP DIVISION 9

City of Kirkland

DIVISION 9 – MATERIALS

9-03 AGGREGATES

9-03.12 Gravel Backfill

Supplement this Section with the following:

(******)

For south stair foundations, provide AASHTO #4 and #57 as identified in the Plans. Aggregate shall conform to ASTM D448.

9-03.12(1)B Recycled Concrete Aggregate

Remove this Section. Recycled concrete aggregate is not allowed.

(******)

9-06 STRUCTURAL STEEL AND RELATED MATERIALS

9-06.2 Structural Low Alloy Steel

Supplement this Section with the following:

(******)

A. Channels and angles shall conform to ASTM A 36 (FY = 36 ksi)

B. Bars and plates shall conform to ASTM A 36 (FY = 36 ksi)

C. Pipe shall conform to ASTM A 53 Grade B, Type E or S

D. Rectangular HSS shall conform to ASTM A500 Grade B (FY = 46 ksi)

E. Handrails shall conform to ASTM A276 Type 316

Steel surfaces, excluding stainless steel, shall be hot-dipped galvanized in conformance with ASTM A 123, A 143, A 153, A 384, and A 385, as applicable. Hot-dip galvanize items after fabrication as far as practical. Restore galvanizing damaged by welding or handling with a field-applied galvanizing compound in accordance with ASTM A 780, Annex A1, 12 mils minimum thickness.

9-06.4 Vacant

Delete this Section and replace it with the following:

(******)

9-06.4 Structural Bolts, Nuts, and Washers

1. Anchor rods shall conform to ASTM F 1554 Grade 55.

2. Economy bolts, hex head bolts, and other bolts shall conform to ASTM A 307 Grade A.

3. Nuts shall conform to ASTM A 563, Heavy Hex.

4. Malleable iron washers shall be used under all nut and bolt heads bearing on timber, except under the heads of economy bolts. Washers bearing against other materials shall conform to F 436.

5. In addition to standard hex nuts, provide lock nuts at all bolted connections.

6. Bolts, nuts, and washers shall be hot-dipped galvanized in accordance with ASTM A 123, A 143, A 153, A 384, and A 385 as applicable.

9-09 TIMBER AND LUMBER

9-09.2 Grade Requirements

Supplement this Section with the following:

(******)

All Timber shall be Pacific Coast Douglas Fir, grade select structural, and conform to the latest specification of the West Coast Lumber Inspection Bureau (WCLIB).

All Timber shall be surfaced on four sides (S4S).

9-09.3 Preservative Treatment

9-09.3(1) General Requirements

Supplement this Section with the following:

(******)

All Timber, unless noted otherwise, shall be treated in accordance with AWPA Standards T1, U1, and UC4B with a minimum retention of 0.60 pounds per cubic foot of Ammoniacal Copper Zinc Arsenate (ACZA). Best Management Practices (BMPs) shall be incorporated as set forth by the Western Wood Preservers Institute (WWPI).

All field cut ends of Timber shall be treated in accordance with AWPA Standard M4.

9-13 RIPRAP, QUARRY SPALLS, SLOPE PROTECTION, AND ROCK FOR EROSION AND SCOUR PROTECTION AND ROCK WALLS

9-13.6 Vacant

Delete this Section and replace it with the following:

(******)

9-13.6 Beach Protection

9-13.6(1) Habitat Gravel

The proposed habitat gravel mix (placed below the ordinary high water mark [OHWM]) will be naturally rounded, meeting the Washington Department of Fish and Wildlife (WDFW) specifications for 1-inch minus material. The habitat beach material to be placed will be a washed, naturally occurring round or subangular gravel, primarily (greater than 80%) igneous or metamorphic rock. Individual stones will be generally free of seams, cracks, and other

defects that tend to destroy its resistance to weather. Rock material will be free of soil, clay balls, debris, wood, organic matter, and other extraneous material.

Sieve Size	Percent Passing (by Weight)
1-1/2” square	100%
1” square	95 – 100%
1/2" square	25 – 60%
U.S. No. 4	0 – 10%
U.S. No. 8	0 – 5%
U.S. No. 50	0 – 1%
U.S. No. 200	0 – 0.5%

9-13.6(2) Beach Sand

Beach sand shall consist of clean, coarse sand or fine gravel, uniformly graded from coarse to fine.

Sieve Size	Percent Passing (by weight)
3/8 inch	100%
No. 4	95 – 100%
No. 6	82 – 98%
No. 8	68 – 86%
No. 50	9 – 20%
No. 200 Wet Sieve	0 – 2.5%

9-13.7 Rock for Rock Wall

Supplement this Section with the following:

(*****)

9-13.7(3) Salvaged Rock

Basalt rock in a range of sizes is available on site as salvaged material from site demolition. The rock selected for salvage and reuse shall be hard, sound, and durable. It shall be free from segregation, seams, cracks, and other defects tending to reduce weather resistance. Concrete rubble shall not be used as rock riprap. The Contractor shall mark the rock riprap suitable for on-site salvaged rock placement. The Project Engineer shall approve marked rock prior to placement.

9-13.7(4) Granite Step

Granite steps shall be of a single High Cascade Weathered Granite stone with flat split faces at right angles for the riser and tread surfaces. Granite steps shall be of the size required to construct the granite steps as shown on the Plans and the minimum depth shall be 24 inches. Exposed faces of the stones shall be broken or otherwise roughened to provide traction and be generally flat with no irregularities that would result in a trip hazard. All riser faces shall have vertical edges and distinct corners when installed.

9-14 EROSION CONTROL AND ROADSIDE PLANTING

9-14.2 Topsoil

9-14.2(1) Topsoil

Delete this Section and replace with the following:

(******)

Topsoil shall consist of 2/3 sandy loam and 1/3 composted organic material.

1. Sandy loam shall consist largely of sand, but with enough silt and clay present to give it a small amount of stability. Individual sand grains shall be of sufficient size to be seen and felt readily. On squeezing in the hand when dry, it shall form a cast that not only holds its shape when the pressure is released, but withstands careful handling without breaking.

2. The mixed soil shall meet the following gradation:

Sieve Size	Percent Passing (by weight)
3/8 inch	100%
#4	95%
#10	85%
#30	70%
#60	50%
#100	30%
#270	15%

3. The mixed soil shall have a pH range of 5.0 to 6.5, with dolomite lime added as necessary to attain this range.

4. Composted organic material shall consist of composted yard debris or organic waste material and shall consist of 100 percent recycled content. In addition, the organic material shall have the following characteristics:

    a. Shall be screened using a sieve no finer than 5/16 inch and no greater than 7/16 inch.

    b. Shall pass a standard cress test for seed germination (90 percent germination compared to standard).

    c. Shall have a pH range of 5.5 to 7.5.

    d. Shall have a maximum electrical conductivity of 3.0 ohms per centimeter (ohms/cm).

    e. Shall have a maximum carbon to nitrogen ratio of 40:1.

    f. Shall be certified by the Process to Further Reduce Pathogens (PFRP) guideline for hot composting as established by the U.S. Environmental Protection Agency (EPA).

    g. Shall be fully composted, mature, and stable before being acceptable.

9-14.3 Seed

Supplement this Section with the following:

(******)

9-14.3(1) Lawn Seed Mix

The lawn area seed mix shall be hydroseeded with the following species:

50 percent	Turf-type Perennial Rye-grasses
25 percent	Creeping Red Fescue
25 percent	Chewings Fescue

The lawn area seed mix shall also meet or exceed the following:

Minimum pure seed percent: 98 percent
Minimum germination percent: 90 percent
Maximum weed seed percent: 0.5 percent

9.14.4 Fertilizer

Delete this Section and replace with the following:

(******)

Fertilizer shall conform to reference FS O-F-24D, Commercial Fertilizers and Washington State Department of Agriculture (WSDA) laws. Fertilizer for all tree plantings shall be "BioPaks-16-6-8 plus minors and biostimulants" available from Reforestation Technologies International (RTI), 1-800-784-4769.

BioPak®, or approved equivalent, shall consist of: a 10-gram biodegradable planting packet containing a blend of 16.00 percent total nitrogen (N), 6.00 percent available phosphoric acid (P_2O_5), and 8.00 percent soluble potash (K_2O). It shall also contain 6.92 percent combined sulfur (S), 0.52 percent zinc (Zn), 0.54 percent iron (Fe), 0.54 percent magnesium (Mg), 0.23 percent copper (Cu), 0.05 percent boron (B), and 0.56 percent manganese (Mn). The nitrogen, phosphorous, and potassium sources shall be coated with a polyurethane coating to provide 15.69 percent coated slow-release nitrogen, 5.09 percent coated slow-release available phosphate, and 6.80 percent slowly available soluble potash. It shall also contain 5.0 percent humic acid derived from rutile sands, 0.25 percent kelp extract, and 0.9 percent naphthalene acetic acid.

Soil conditioner shall consist of Mycor Tree Saver mycorrhizal fungal transplant inoculant for trees and shrubs or approved equal consisting of:

Ectomycorrhizal Fungi	95 million spores per pound (spores/lb)
Vesicular Arbuscular Mycorrhizal (VAM) Fungi	5,300 spores/lb
Rhizosphere Bacillus	324 million colony forming units per pound (cfu/lb)
Potassium polyacrylamide	33%
Formononetin	0.007%
Microbial Nutrients	39.4%
Inert Ingredients	27.3%

Hydromulch shall be used in for lawn area. Hydromulch shall be wood cellulose fiber from alder, containing no growth- or germination-inhibiting substances. An organic soil-binding agent (tackifier) is required. Hydromulch shall be dyed a suitable color to facilitate placement.

9-14.5 Mulch and Amendments

9-14.5(7) Tackifier

9-14.5(7)A Synthetic Tackifier

Delete this Section. Contractor shall use 9-14.5(7)B.

(******)

9-14.5(8) Compost

Supplement this Section with the following:

(******)

The compost shall meet the requirements of Section 9-14.5(8) for "Fine Compost." In addition, the organic amendment shall have the following physical characteristics:

a. Shall be certified by the Process to Further Reduce Pathogens (PFRP) guideline for hot composting as established by EPA.

b. Shall be fully mature and stable before usage.

c. Shall be screened using a sieve no finer than 1/4-inch and no greater than 1 inch. Based on dry weight of total organic amendment sample, it must comply with the following percent by weight passing:

Sieve Size	Maximum %	Minimum %
1"		100
5/8"	100	90
1/4"	100	75

d. Meets "composted materials" definition in WAC 173-350 Section 220, available at: http://www.ecy.wa.gov/programs/swfa/compost/

e. Minimum organic matter shall be 40 percent dry weight basis, as determined by TMECC 05.07A, "Loss-on-Ignition Organic Matter Method (LOI)."

f. Has Organic Matter Content greater than 40 percent and a Carbon to Nitrogen ratio of between 15:1 and 25:1.

g. Soluble salt contents shall be less than 4.0 mmhos/cm, tested in accordance with TMECC 04.10-A "Electrical Conductivity."

h. Shall have heavy metal concentrations that conform with Table 220-B of WAC 173-350-220, as follows:

Arsenic <= 20 ppm
Cadmium <=10 ppm
Copper <=750 ppm
Lead <=150 ppm
Mercury <=8 ppm
Molybdenum <=9 ppm
Nickel <=210 ppm
Selenium <=18 ppm
Zinc <=1400 ppm

i. Shall be certified by PFRP guidelines for composting as established by the EPA.

9-14.6 Erosion Control Devices

Supplement this Section with the following:

(******)

9-14.6(10) Unanchored Driftwood

Driftwood shall consist of off-site salvaged natural wood that has not been preservative-treated. Preservative-treated logs are not acceptable. The trunk diameter shall be a minimum of 18 inches and there should be no branches. The Contractor shall obtain logs from approved off-site sources. Logs shall be coniferous and native to Washington State. Coniferous species shall include western hemlock, western red cedar, Douglas fir, or other approved species. Deciduous species shall include big-leaf maple, Pacific madrone, or other approved species. Logs shall be washed free of soil and other debris.

9-14.6(11) Anchored Log with Rootwad

Logs with rootwad shall have trunk, rootwad, and branches intact. The length, as measured from the base of the rootwad to the end of the trunk, shall be a minimum of 25 feet, and the width (branches) shall be a minimum of 10 to 15 feet. Low branching trees or required trees with few or no branches in the lower 20 to 30 feet are unacceptable. The trunk diameter shall be a minimum of 24 inches as measured 15 feet above the base of the trunk. The rootwad shall be at least 3 feet in diameter. Logs shall consist of off-site, salvaged natural wood that has not been preservative-treated. Preservative-treated logs are not acceptable. The Contractor shall obtain logs from approved off-site sources. Logs shall be coniferous and native to Washington State. Coniferous species shall include western hemlock, western red cedar, Douglas fir, or other approved species. Deciduous species shall include big-leaf maple, Pacific madrone, or other approved species. Logs shall be washed free of soil and other debris. The Contractor shall trim logs as directed by the Owner.

9-14.6(12) Jute Matting

Jute matting shall be of a uniform, open, plain weave of unbleached, single just yarn. The yarn shall be of a loosely twisted construction and shall not vary in thickness by more than half of its normal diameter. Jute matting shall be furnished in rolled strips approximately 50 yards in length. Matting width shall be 48 inches with an average weight of 0.92 pounds per square yard. A tolerance of plus or minus 1 inch in width and 5 percent in weight will be allowed.

Wood Stakes for Coir Fabric and Jute Matting: Stakes shall be 2-inch by 2-inch Douglas fir with one tapered end, 2 feet in length. No split or badly splintered stakes will be accepted.

9-15 IRRIGATION SYSTEM

Supplement this Section with the following:

(******)

9-15.20 Other Materials

Provide other materials, not specifically described but required for a complete and proper installation, as selected by Contractor subject to the approval of Owner.

9-16 FENCE AND GUARDRAIL

Supplement this Section with the following:

(******)

9-16.1(1)G Temporary Chain Link Fencing

Temporary chain link fencing shall be used to protect trees during construction within clearing and grading areas. Chain link fencing shall include posts, rails, braces, and mesh, and shall be a minimum of 6 feet high per City of Kirkland standard plan CK-R.49.

9-19 VACANT

Delete this Section and replace with the following:

(******)

9-19 MISCELLANEOUS CONSTRUCTION MATERIALS

9-19.1 Bench

Benches shall be located as indicated on the Plans. The benches shall be the Timberform Greenway Model No. 2141-6 Contour Bench with Armrests. Frame shall be black powder-coated steel with kiln-dried wood slats. Benches shall use an embedded frame post installation.

9-19.2 Vinyl Sheetpile

Sheetpiling shall be ultraviolet (UV) inhibited, impact modified, interlocking, weatherable rigid vinyl; acceptable manufacturer is ShoreGuard product SG-325, manufactured by Crane Materials International, or approved equal. Sheetpiling shall be light grey.

Sheetpiling shall meet the following criteria:

Characteristic	Typical Value	Test
Allowable Moment	Minimum 2,960 ft-lbs/ft	
Flexural Modulus	380,000 PSI	ASTM D-790
Tensile Strength	6,300 PSI	ASTM-638
Impact Strength	Minimum 13.750 inch-lbs/inch^2	ASTM D-4226 Procedure B
Section Width	Maximum 24 inches	
Thickness	Minimum 0.250 inches	

9-19.3 FRP Grating

Use the following product or equal (approved by Engineer):

1. 1-1/2 inch deep Micro-Mesh Decking from Fibergrate Composite Structures Inc.
2. WLP-2 Clip Assembly”
3. Color shall be gray as selected from manufacturer’s standard colors offered for this product.

FRP Grating materials shall be installed so that the grid pattern is in a straight visually appealing line and of a uniform color.

9-33 CONSTRUCTION GEOSYNTHETIC

9-33.2 Geosynthetic Properties

9-33.2(1) Geotextile Properties

Supplement this Section with the following:

(******)

Geotextile for rock walls and for bulkhead repair shall be a non-woven sheet of polymeric material which is chemically resistant to the conditions to which it will be exposed. Geotextile shall meet or exceed the requirements for moderate survivability as noted in Table 1 of this Section.

END OF DIVISION 9

PREVAILING WAGES

City of Kirkland

King County L&I Prevailing Wages

a full list of wages can be found on the following website
https://secure.lni.wa.gov/wagelookup/

County	Trade	Job Classification	Wage	Holiday	Overtime	Notes
King	Carpenters	Acoustical Worker	$64.94	7A	4C	
King	Carpenters	Carpenter	$64.94	7A	4C	
King	Carpenters	Carpenters on Stationary Tools	$65.07	7A	4C	
King	Carpenters	Creosoted Material	$65.07	7A	4C	
King	Carpenters	Floor Finisher	$64.94	7A	4C	
King	Carpenters	Floor Layer	$64.94	7A	4C	
King	Carpenters	Scaffold Erector	$64.94	7A	4C	
King	Divers & Tenders	Bell/Vehicle or Submersible Operator (Not Under Pressure)	$118.80	7A	4C	
King	Divers & Tenders	Dive Supervisor/Master	$81.98	7A	4C	
King	Divers & Tenders	Diver	$118.80	7A	4C	8V
King	Divers & Tenders	Diver On Standby	$76.98	7A	4C	
King	Divers & Tenders	Diver Tender	$69.91	7A	4C	
King	Divers & Tenders	Manifold Operator	$69.91	7A	4C	
King	Divers & Tenders	Manifold Operator Mixed Gas	$74.91	7A	4C	
King	Divers & Tenders	Remote Operated Vehicle Operator/Technician	$69.91	7A	4C	
King	Divers & Tenders	Remote Operated Vehicle Tender	$65.19	7A	4C	
King	Dredge Workers	Assistant Engineer	$70.62	5D	3F	
King	Dredge Workers	Assistant Mate (Deckhand)	$70.07	5D	3F	
King	Dredge Workers	Boatmen	$70.62	5D	3F	
King	Dredge Workers	Engineer Welder	$71.97	5D	3F	
King	Dredge Workers	Leverman, Hydraulic	$73.41	5D	3F	
King	Dredge Workers	Mates	$70.62	5D	3F	
King	Dredge Workers	Oiler	$70.07	5D	3F	
King	Electrical Fixture Maintenance Workers	Journey Level	$31.99	5L	1E	
King	Ironworkers	Journeyman	$76.78	7N	1O	
King	Laborers	Air, Gas Or Electric Vibrating Screed	$52.39	7A	4V	8Y
King	Laborers	Airtrac Drill Operator	$54.01	7A	4V	8Y
King	Laborers	Ballast Regular Machine	$52.39	7A	4V	8Y
King	Laborers	Batch Weighman	$44.40	7A	4V	8Y
King	Laborers	Brick Pavers	$52.39	7A	4V	8Y
King	Laborers	Carpenter Tender	$52.39	7A	4V	8Y
King	Laborers	Cement Dumper-paving	$53.35	7A	4V	8Y
King	Laborers	Cement Finisher Tender	$52.39	7A	4V	8Y
King	Laborers	Change House Or Dry Shack	$52.39	7A	4V	8Y
King	Laborers	Chipping Gun (30 Lbs. And Over)	$53.35	7A	4V	8Y
King	Laborers	Chipping Gun (Under 30 Lbs.)	$52.39	7A	4V	8Y
King	Laborers	Choker Setter	$52.39	7A	4V	8Y
King	Laborers	Chuck Tender	$52.39	7A	4V	8Y
King	Laborers	Clary Power Spreader	$53.35	7A	4V	8Y
King	Laborers	Clean-up Laborer	$52.39	7A	4V	8Y
King	Laborers	Concrete Dumper/Chute Operator	$53.35	7A	4V	8Y
King	Laborers	Concrete Form Stripper	$52.39	7A	4V	8Y
King	Laborers	Concrete Placement Crew	$53.35	7A	4V	8Y
King	Laborers	Concrete Saw Operator/Core Driller	$53.35	7A	4V	8Y
King	Laborers	Crusher Feeder	$44.40	7A	4V	8Y
King	Laborers	Curing Laborer	$52.39	7A	4V	8Y
King	Laborers	Demolition: Wrecking & Moving (Incl. Charred Material)	$52.39	7A	4V	8Y
King	Laborers	Ditch Digger	$52.39	7A	4V	8Y
King	Laborers	Diver	$54.01	7A	4V	8Y
King	Laborers	Drill Operator (Hydraulic, Diamond)	$53.35	7A	4V	8Y
King	Laborers	Dry Stack Walls	$52.39	7A	4V	8Y
King	Laborers	Dump Person	$52.39	7A	4V	8Y
King	Laborers	Epoxy Technician	$52.39	7A	4V	8Y
King	Laborers	Erosion Control Worker	$52.39	7A	4V	8Y
King	Laborers	Faller & Bucker Chain Saw	$53.35	7A	4V	8Y
King	Laborers	Fine Graders	$52.39	7A	4V	8Y
King	Laborers	Firewatch	$44.40	7A	4V	8Y
King	Laborers	Form Setter	$52.39	7A	4V	8Y
King	Laborers	Gabian Basket Builders	$52.39	7A	4V	8Y
King	Laborers	General Laborer	$52.39	7A	4V	8Y
King	Laborers	Grade Checker & Transit Person	$54.01	7A	4V	8Y
King	Laborers	Grinders	$52.39	7A	4V	8Y
King	Laborers	Grout Machine Tender	$52.39	7A	4V	8Y
King	Laborers	Groutmen (Pressure) Including Post Tension Beams	$53.35	7A	4V	8Y
King	Laborers	Guardrail Erector	$52.39	7A	4V	8Y

King	Laborers	Hazardous Waste Worker (Level A)	$54.01	7A	4V	8Y
King	Laborers	Hazardous Waste Worker (Level B)	$53.35	7A	4V	8Y
King	Laborers	Hazardous Waste Worker (Level C)	$52.39	7A	4V	8Y
King	Laborers	High Scaler	$54.01	7A	4V	8Y
King	Laborers	Jackhammer	$53.35	7A	4V	8Y
King	Laborers	Laserbeam Operator	$53.35	7A	4V	8Y
King	Laborers	Maintenance Person	$52.39	7A	4V	8Y
King	Laborers	Manhole Builder-Mudman	$53.35	7A	4V	8Y
King	Laborers	Nozzleman (Concrete Pump, Green Cutter When Using Combination Of High Pressure Air & Water On Concrete & Rock, Sandblast, Gunite, Shotcrete, Water Blaster, Vacuum Blaster)	$53.35	7A	4V	8Y
King	Laborers	Pavement Breaker	$53.35	7A	4V	8Y
King	Laborers	Pilot Car	$44.40	7A	4V	8Y
King	Laborers	Pipe Layer Lead	$54.01	7A	4V	8Y
King	Laborers	Pipe Layer/Tailor	$53.35	7A	4V	8Y
King	Laborers	Pipe Pot Tender	$53.35	7A	4V	8Y
King	Laborers	Pipe Reliner	$53.35	7A	4V	8Y
King	Laborers	Pipe Wrapper	$53.35	7A	4V	8Y
King	Laborers	Pot Tender	$52.39	7A	4V	8Y
King	Laborers	Powderman	$54.01	7A	4V	8Y
King	Laborers	Powderman's Helper	$52.39	7A	4V	8Y
King	Laborers	Power Jacks	$53.35	7A	4V	8Y
King	Laborers	Railroad Spike Puller - Power	$53.35	7A	4V	8Y
King	Laborers	Raker - Asphalt	$54.01	7A	4V	8Y
King	Laborers	Re-timberman	$54.01	7A	4V	8Y
King	Laborers	Remote Equipment Operator	$53.35	7A	4V	8Y
King	Laborers	Rigger/Signal Person	$53.35	7A	4V	8Y
King	Laborers	Rip Rap Person	$52.39	7A	4V	8Y
King	Laborers	Rivet Buster	$53.35	7A	4V	8Y
King	Laborers	Rodder	$53.35	7A	4V	8Y
King	Laborers	Spreader (Concrete)	$53.35	7A	4V	8Y
King	Laborers	Stake Hopper	$52.39	7A	4V	8Y
King	Laborers	Stock Piler	$52.39	7A	4V	8Y
King	Laborers	Swinging Stage/Boatswain Chair	$44.40	7A	4V	8Y
King	Laborers	Tamper & Similar Electric, Air & Gas Operated Tools	$53.35	7A	4V	8Y
King	Laborers	Tamper (Multiple & Self-propelled)	$53.35	7A	4V	8Y
King	Laborers	Timber Person - Sewer (Lagger, Shorer & Cribber)	$53.35	7A	4V	8Y
King	Laborers	Topper	$52.39	7A	4V	8Y
King	Laborers	Track Laborer	$52.39	7A	4V	8Y
King	Laborers	Track Liner (Power)	$53.35	7A	4V	8Y
King	Laborers	Traffic Control Laborer	$47.48	7A	4V	9C
King	Laborers	Traffic Control Supervisor	$50.31	7A	4V	9C
King	Laborers	Truck Spotter	$52.39	7A	4V	8Y
King	Laborers	Vibrator	$53.35	7A	4V	8Y
King	Laborers	Watchman	$40.36	7A	4V	8Y
King	Laborers	Welder	$53.35	7A	4V	8Y
King	Landscape Construction	Landscape Construction/Landscaping Or Planting Laborers	$40.36	7A	4V	8Y
King	Landscape Construction	Landscape Operator	$72.28	7A	3K	8X
King	Metal Fabrication (In Shop)	Journey Level	$41.70	15F	11A	
King	Surveyors	Assistant Construction Site Surveyor	$72.28	7A	3K	8X
King	Surveyors	Chainman	$69.12	7A	3K	8X
King	Surveyors	Construction Site Surveyor	$73.49	7A	3K	8X
King	Truck Drivers	Asphalt Mix Over 16 Yards	$64.55	5D	4Y	8L
King	Truck Drivers	Asphalt Mix To 16 Yards	$63.71	5D	4Y	8L
King	Truck Drivers	Dump Truck	$63.71	5D	4Y	8L
King	Truck Drivers	Dump Truck & Trailer	$64.55	5D	4Y	8L
King	Truck Drivers	Other Trucks	$64.55	5D	4Y	8L
King	Truck Drivers - Ready Mix	Transit Mix	$64.55	5D	4Y	8L

APPENDIX A: PLANS

Under separate cover

City of Kirkland

APPENDIX B: PERMITS

- **B1 – JARPA PERMIT**
- **B2 – HPA PERMIT**
- **B3 – Shoreline PERMIT**
- **B4 – SEPA PERMIT**
- **B5 – LSM PERMIT**
- **B6 – Building PERMIT**

City of Kirkland

JARPA PERMIT

City of Kirkland

DEPARTMENT OF THE ARMY
CORPS OF ENGINEERS, SEATTLE DISTRICT
P.O. BOX 3755
SEATTLE, WASHINGTON 98124-3755

Regulatory Branch August 28, 2020

Mr. Brian Baker
City of Kirkland
Department of Public Works
123 5th Avenue
Kirkland, Washington 98033

Reference: NWS-2020-347
Kirkland, City of
(Shoreline Restoration)

Dear Mr. Baker:

We have reviewed your application to remove 356 linear feet of existing concrete bulkheads, place 311 cubic yards of spawning, 125 cubic yards of shoreline cobble underlayment, and maintain an existing pier in Lake Washington at Kirkland, Washington. Based on the information you provided to us, Nationwide Permit (NWP) 27, *Aquatic Habitat Restoration, Establishment, and Enhancement Activities and NWP 3, Maintenance* (Federal Register January 6, 2017, Vol. 82, No. 4), authorizes your proposal as depicted on the enclosed drawings dated August 2020.

In order for this authorization to be valid, you must ensure the work is performed in accordance with the enclosed *NWP 27 and 3, Terms and Conditions* and the following special conditions:

a. In order to meet the requirements of the Endangered Species Act you may conduct the authorized in-water activities (e.g., pile driving) during the period from July 16 through March 15 in any year this permit is valid. The in-water activities authorized by this permit may not be conducted from March 16 through July 15 in any year this permit is valid.

b. Incidents where any individuals of fish species, marine mammals and/or sea turtles listed by National Oceanic and Atmospheric Administration Fisheries (NOAA Fisheries) under the Endangered Species Act appear to be injured or killed as a result of discharges of dredged or fill material into waters of the U.S. or structures or work in navigable waters of the U.S. authorized by this Nationwide Permit verification shall be reported to NOAA Fisheries, Office of Protected Resources at (301) 713-1401 and the Regulatory Office of the Seattle District of the U.S. Army

Corps of Engineers at (206) 764-3495. The finder should leave the animal alone, make note of any circumstances likely causing the death or injury, note the location and number of individuals involved and, if possible, take photographs. Adult animals should not be disturbed unless circumstances arise where they are obviously injured or killed by discharge exposure or some unnatural cause. The finder may be asked to carry out instructions provided by NOAA Fisheries to collect specimens or take other measures to ensure that evidence intrinsic to the specimen is preserved.

c. In order to meet the requirements of the Endangered Species Act (ESA) and Magnuson-Stevens Fishery Conservation and Management Act (MSA) Restoration and Permitting (RAP) programmatic consultation (National Marine Fisheries Service (NMFS) Reference Number WCRO-2016-00008), you must implement and abide by the ESA requirements and/or agreements set forth in the Biological Opinion (BO) dated February 17, 2017, the NMFS' RAP Implementation Guide dated July 25, 2019, and the RAP form for your individual project (NMFS Reference Number WCRO-2016-00008-2159). The BO is available on the U.S. Army Corps of Engineers (Corps) website (Permit Guidebook, Endangered Species, Programmatic Consultations, Activities on Lakes Washington and Sammamish). Upon completion of the permitted work, you must submit an As-Built Report (see RAP Implementation Guide, Appendix E) to the Corps and the NMFS (rap-reports.wcr@noaa.gov). You must visually monitor the work area during construction when the substrate is disturbed and ensure that observable turbidity increases do not extend beyond a 150-foot radius around the work area. If turbidity increases occur beyond this area, must comply with any required RAP planting plan (see RAP Implementation Guide, Appendices C and D) requirements and submit annual monitoring reports for five years to the Corps and the NMFS (rap-reports.wcr@noaa.gov). All reports must prominently display the reference number NWS-2020-347. Failure to comply with these requirements constitutes non-compliance with the ESA and your Corps permit. The NMFS is the appropriate authority to determine compliance with the terms and conditions of its BO and with the ESA. If you cannot comply with the terms and conditions of this programmatic consultation, you must, prior to commencing construction, contact the Corps, Seattle District, Regulatory Branch for an individual consultation in accordance with the requirements of the ESA and/or the MSA.

d. In order to meet the requirements of the Endangered Species Act (ESA) programmatic letter of concurrence for selected activities in the Lake Washington/Lake Sammamish Basins (U.S. Fish and Wildlife Service (USFWS) Reference Number 13410-2009-I-0386-R001) you must comply with the relevant conservation measures in the document titled, Conservation Measures for Activities Covered under the Lake Washington Programmatic Consultation Letter of Concurrence available on the U.S. Army Corps of Engineers (Corps) website (Permit Guidebook, Endangered Species, Programmatic Consultations, Activities on Lakes Washington and Sammamish). If you cannot comply with these conservation measures, you must, prior to commencing construction, contact the Corps, Seattle District, Regulatory Branch for an

individual consultation in accordance with the requirements of the ESA. The USFWS is the appropriate authority to determine compliance with the ESA.

We have reviewed your project pursuant to the requirements of the Endangered Species Act, the Magnuson-Stevens Fishery Conservation and Management Act and the National Historic Preservation Act. We have determined this project complies with the requirements of these laws provided you comply with all of the permit general and special conditions.

Please be reminded that Special Condition "c" of your permit requires that you implement and abide by the Endangered Species Act (ESA) requirements set forth in the programmatic Biological Opinion (BO) for this project. In particular, within 60 days you must provide an As-Built Report, and annual monitoring reports, as described in the BO.

The authorized work complies with the Washington State Department of Ecology's (Ecology) Water Quality Certification (WQC) requirements and Coastal Zone Management (CZM) consistency determination response for this NWP. No further coordination with Ecology for WQC and CZM is required.

Lake Washington is a water of the U.S. The Section 10 jurisdictional boundaries are shown on the enclosed permit drawings. If you believe these boundaries are inaccurate, you may request a preliminary or approved jurisdictional determination (JD). If one is requested, please be aware that we may require the submittal of additional information to complete the JD and work authorized in this letter may <u>not</u> occur until the JD has been completed.

Our verification of this NWP authorization is valid until March 18, 2022, unless the NWP is modified, reissued, or revoked prior to that date. If the authorized work has not been completed by that date and you have commenced or are under contract to commence this activity before March 18, 2022, you will have until March 18, 2023, to complete the activity under the enclosed terms and conditions of this NWP. Failure to comply with all terms and conditions of this NWP verification invalidates this authorization and could result in a violation of Section 404 of the Clean Water Act and/or Section 10 of the Rivers and Harbors Act. You must also obtain all local, State, and other Federal permits that apply to this project.

Upon completing the authorized work, you must fill out and return the enclosed *Certificate of Compliance with Department of the Army Permit*. Thank you for your cooperation during the permitting process. We are interested in your experience with our Regulatory Program and encourage you to complete a customer service survey. These documents and information about our program are available on our website at www.nws.usace.army.mil, select "Regulatory Branch, Permit Information" and then "Contact Us."

A copy of this letter with enclosures will be furnished to Mr. Josh Jensen, of Anchor QEA, LLC, at jjenson@anchorqea.com. If you have any questions, please contact me at colleen.c.anderson@usace.army.mil or at (206) 764-3262.

Sincerely,

Colleen Anderson, Project Manager
Regulatory Branch

Enclosures

US Army Corps of Engineers
Seattle District

NATIONWIDE PERMIT 3
Terms and Conditions

Effective Date: March 19, 2017

A. Description of Authorized Activities
B. U.S. Army Corps of Engineers (Corps) National General Conditions for all NWPs
C. Corps Seattle District Regional General Conditions
D. Corps Regional Specific Conditions for this NWP
E. Washington Department of Ecology (Ecology) Section 401 Water Quality Certification (401 Certification): General Conditions
F. Ecology 401 Certification: Specific Conditions for this NWP
G. Coastal Zone Management Consistency Response for this NWP

In addition to any special condition that may be required on a case-by-case basis by the District Engineer, the following terms and conditions must be met, as applicable, for a Nationwide Permit (NWP) authorization to be valid in Washington State.

A. DESCRIPTION OF AUTHORIZED ACTIVITIES

Maintenance. (a) The repair, rehabilitation, or replacement of any previously authorized, currently serviceable structure or fill, or of any currently serviceable structure or fill authorized by 33 CFR 330.3, provided that the structure or fill is not to be put to uses differing from those uses specified or contemplated for it in the original permit or the most recently authorized modification. Minor deviations in the structure's configuration or filled area, including those due to changes in materials, construction techniques, requirements of other regulatory agencies, or current construction codes or safety standards that are necessary to make the repair, rehabilitation, or replacement are authorized. This NWP also authorizes the removal of previously authorized structures or fills. Any stream channel modification is limited to the minimum necessary for the repair, rehabilitation, or replacement of the structure or fill; such modifications, including the removal of material from the stream channel, must be immediately adjacent to the project. This NWP also authorizes the removal of accumulated sediment and debris within, and in the immediate vicinity of, the structure or fill. This NWP also authorizes the repair, rehabilitation, or replacement of those structures or fills destroyed or damaged by storms, floods, fire or other discrete events, provided the repair, rehabilitation, or replacement is commenced, or is under contract to commence, within two years of the date of their destruction or damage. In cases of catastrophic events, such as hurricanes or tornadoes, this two-year limit may be waived by the district engineer, provided the permittee can demonstrate funding, contract, or other similar delays. (b) This NWP also authorizes the removal of accumulated sediments and debris outside the immediate vicinity of existing structures (e.g., bridges, culverted road crossings, water intake structures, etc.). The removal of sediment is limited to the minimum necessary to restore the waterway in the vicinity of the structure to the approximate dimensions that existed when the structure was built, but cannot extend farther than 200 feet in any direction from the structure. This 200 foot limit does not apply to maintenance dredging to remove accumulated sediments blocking or restricting outfall and intake structures or to maintenance dredging to remove accumulated sediments from canals associated with outfall and intake structures. All dredged or excavated materials must be deposited and retained in an area that has no waters of the United States unless otherwise specifically approved by the district engineer under separate authorization. (c) This NWP also authorizes temporary structures, fills, and work, including the use of temporary mats, necessary to conduct the maintenance activity. Appropriate measures must be taken to maintain normal downstream flows and minimize flooding to the maximum extent practicable, when temporary structures, work, and discharges, including cofferdams, are necessary for construction activities, access fills, or dewatering of construction

sites. Temporary fills must consist of materials, and be placed in a manner, that will not be eroded by expected high flows. After conducting the maintenance activity, temporary fills must be removed in their entirety and the affected areas returned to pre-construction elevations. The areas affected by temporary fills must be revegetated, as appropriate. (d) This NWP does not authorize maintenance dredging for the primary purpose of navigation. This NWP does not authorize beach restoration. This NWP does not authorize new stream channelization or stream relocation projects. Notification: For activities authorized by paragraph (b) of this NWP, the permittee must submit a pre-construction notification to the district engineer prior to commencing the activity (see general condition 32). The pre-construction notification must include information regarding the original design capacities and configurations of the outfalls, intakes, small impoundments, and canals. (Authorities: Section 10 of the Rivers and Harbors Act of 1899 and section 404 of the Clean Water Act (Sections 10 and 404)) Note: This NWP authorizes the repair, rehabilitation, or replacement of any previously authorized structure or fill that does not qualify for the Clean Water Act section 404(f) exemption for maintenance.

B. CORPS NATIONAL GENERAL CONDITIONS FOR ALL NWPs

To qualify for NWP authorization, the prospective permittee must comply with the following general conditions, as applicable, in addition to any regional or case-specific conditions imposed by the division engineer or district engineer. Every person who may wish to obtain permit authorization under one or more NWPs, or who is currently relying on an existing or prior permit authorization under one or more NWPs, has been and is on notice that all of the provisions of 33 CFR 330.1 through 330.6 apply to every NWP authorization. Note especially 33 CFR 330.5 relating to the modification, suspension, or revocation of any NWP authorization.

1. Navigation. (a) No activity may cause more than a minimal adverse effect on navigation. (b) Any safety lights and signals prescribed by the U.S. Coast Guard, through regulations or otherwise, must be installed and maintained at the permittee's expense on authorized facilities in navigable waters of the United States. (c) The permittee understands and agrees that, if future operations by the United States require the removal, relocation, or other alteration, of the structure or work herein authorized, or if, in the opinion of the Secretary of the Army or his authorized representative, said structure or work shall cause unreasonable obstruction to the free navigation of the navigable waters, the permittee will be required, upon due notice from the Corps of Engineers, to remove, relocate, or alter the structural work or obstructions caused thereby, without expense to the United States. No claim shall be made against the United States on account of any such removal or alteration.

2. Aquatic Life Movements. No activity may substantially disrupt the necessary life cycle movements of those species of aquatic life indigenous to the waterbody, including those species that normally migrate through the area, unless the activity's primary purpose is to impound water. All permanent and temporary crossings of waterbodies shall be suitably culverted, bridged, or otherwise designed and constructed to maintain low flows to sustain the movement of those aquatic species. If a bottomless culvert cannot be used, then the crossing should be designed and constructed to minimize adverse effects to aquatic life movements.

3. Spawning Areas. Activities in spawning areas during spawning seasons must be avoided to the maximum extent practicable. Activities that result in the physical destruction (e.g., through excavation, fill, or downstream smothering by substantial turbidity) of an important spawning area are not authorized.

4. Migratory Bird Breeding Areas. Activities in waters of the United States that serve as breeding areas for migratory birds must be avoided to the maximum extent practicable.

5. Shellfish Beds. No activity may occur in areas of concentrated shellfish populations, unless the activity is directly related to a shellfish harvesting activity authorized by NWPs 4 and 48, or is a shellfish seeding or habitat restoration activity authorized by NWP 27.

6. Suitable Material. No activity may use unsuitable material (e.g., trash, debris, car bodies, asphalt, etc.). Material used for construction or discharged must be free from toxic pollutants in toxic amounts (see section 307 of the Clean Water Act).

7. Water Supply Intakes. No activity may occur in the proximity of a public water supply intake, except where the activity is for the repair or improvement of public water supply intake structures or adjacent bank stabilization.

8. Adverse Effects From Impoundments. If the activity creates an impoundment of water, adverse effects to the aquatic system due to accelerating the passage of water, and/or restricting its flow must be minimized to the maximum extent practicable.

9. Management of Water Flows. To the maximum extent practicable, the pre-construction course, condition, capacity, and location of open waters must be maintained for each activity, including stream channelization, storm water management activities, and temporary and permanent road crossings, except as provided below. The activity must be constructed to withstand expected high flows. The activity must not restrict or impede the passage of normal or high flows, unless the primary purpose of the activity is to impound water or manage high flows. The activity may alter the pre-construction course, condition, capacity, and location of open waters if it benefits the aquatic environment (e.g., stream restoration or relocation activities).

10. Fills Within 100-Year Floodplains. The activity must comply with applicable FEMA-approved state or local floodplain management requirements.

11. Equipment. Heavy equipment working in wetlands or mudflats must be placed on mats, or other measures must be taken to minimize soil disturbance.

12. Soil Erosion and Sediment Controls. Appropriate soil erosion and sediment controls must be used and maintained in effective operating condition during construction, and all exposed soil and other fills, as well as any work below the ordinary high water mark or high tide line, must be permanently stabilized at the earliest practicable date. Permittees are encouraged to perform work within waters of the United States during periods of low-flow or no-flow, or during low tides.

13. Removal of Temporary Fills. Temporary fills must be removed in their entirety and the affected areas returned to pre-construction elevations. The affected areas must be revegetated, as appropriate.

14. Proper Maintenance. Any authorized structure or fill shall be properly maintained, including maintenance to ensure public safety and compliance with applicable NWP general conditions, as well as any activity-specific conditions added by the district engineer to an NWP authorization.

15. Single and Complete Project. The activity must be a single and complete project. The same NWP cannot be used more than once for the same single and complete project.

16. Wild and Scenic Rivers. (a) No NWP activity may occur in a component of the National Wild and Scenic River System, or in a river officially designated by Congress as a “study river” for possible inclusion in the system while the river is in an official study status, unless the appropriate Federal agency with direct management responsibility for such river, has determined in writing that the proposed activity will not adversely affect the Wild and Scenic River designation or study status. (b) If a proposed NWP

activity will occur in a component of the National Wild and Scenic River System, or in a river officially designated by Congress as a "study river" for possible inclusion in the system while the river is in an official study status, the permittee must submit a pre-construction notification (see general condition 32). The district engineer will coordinate the PCN with the Federal agency with direct management responsibility for that river. The permittee shall not begin the NWP activity until notified by the district engineer that the Federal agency with direct management responsibility for that river has determined in writing that the proposed NWP activity will not adversely affect the Wild and Scenic River designation or study status. (c) Information on Wild and Scenic Rivers may be obtained from the appropriate Federal land management agency responsible for the designated Wild and Scenic River or study river (e.g., National Park Service, U.S. Forest Service, Bureau of Land Management, U.S. Fish and Wildlife Service). Information on these rivers is also available at: http://www.rivers.gov/.

17. Tribal Rights. No NWP activity may cause more than minimal adverse effects on tribal rights (including treaty rights), protected tribal resources, or tribal lands.

18. Endangered Species. (a) No activity is authorized under any NWP which is likely to directly or indirectly jeopardize the continued existence of a threatened or endangered species or a species proposed for such designation, as identified under the Federal Endangered Species Act (ESA), or which will directly or indirectly destroy or adversely modify the critical habitat of such species. No activity is authorized under any NWP which "may affect" a listed species or critical habitat, unless ESA section 7 consultation addressing the effects of the proposed activity has been completed. Direct effects are the immediate effects on listed species and critical habitat caused by the NWP activity. Indirect effects are those effects on listed species and critical habitat that are caused by the NWP activity and are later in time, but still are reasonably certain to occur. (b) Federal agencies should follow their own procedures for complying with the requirements of the ESA. If pre-construction notification is required for the proposed activity, the Federal permittee must provide the district engineer with the appropriate documentation to demonstrate compliance with those requirements. The district engineer will verify that the appropriate documentation has been submitted. If the appropriate documentation has not been submitted, additional ESA section 7 consultation may be necessary for the activity and the respective federal agency would be responsible for fulfilling its obligation under section 7 of the ESA. (c) Non-federal permittees must submit a pre-construction notification to the district engineer if any listed species or designated critical habitat might be affected or is in the vicinity of the activity, or if the activity is located in designated critical habitat, and shall not begin work on the activity until notified by the district engineer that the requirements of the ESA have been satisfied and that the activity is authorized. For activities that might affect Federally-listed endangered or threatened species or designated critical habitat, the pre-construction notification must include the name(s) of the endangered or threatened species that might be affected by the proposed activity or that utilize the designated critical habitat that might be affected by the proposed activity. The district engineer will determine whether the proposed activity "may affect" or will have "no effect" to listed species and designated critical habitat and will notify the non-Federal applicant of the Corps' determination within 45 days of receipt of a complete pre-construction notification. In cases where the non-Federal applicant has identified listed species or critical habitat that might be affected or is in the vicinity of the activity, and has so notified the Corps, the applicant shall not begin work until the Corps has provided notification that the proposed activity will have "no effect" on listed species or critical habitat, or until ESA section 7 consultation has been completed. If the non-Federal applicant has not heard back from the Corps within 45 days, the applicant must still wait for notification from the Corps. (d) As a result of formal or informal consultation with the FWS or NMFS the district engineer may add species-specific permit conditions to the NWPs. (e) Authorization of an activity by an NWP does not authorize the "take" of a threatened or endangered species as defined under the ESA. In the absence of separate authorization (e.g., an ESA Section 10 Permit, a Biological Opinion with "incidental take" provisions, etc.) from the FWS or the NMFS, the Endangered Species Act prohibits any person subject to the jurisdiction of the United States to take a listed species, where "take" means to harass, harm, pursue, hunt, shoot, wound, kill, trap, capture, or collect, or to attempt to engage in any such conduct. The word

“harm” in the definition of “take" means an act which actually kills or injures wildlife. Such an act may include significant habitat modification or degradation where it actually kills or injures wildlife by significantly impairing essential behavioral patterns, including breeding, feeding or sheltering.
(f) If the non-federal permittee has a valid ESA section 10(a)(1)(B) incidental take permit with an approved Habitat Conservation Plan for a project or a group of projects that includes the proposed NWP activity, the non-federal applicant should provide a copy of that ESA section 10(a)(1)(B) permit with the PCN required by paragraph (c) of this general condition. The district engineer will coordinate with the agency that issued the ESA section 10(a)(1)(B) permit to determine whether the proposed NWP activity and the associated incidental take were considered in the internal ESA section 7 consultation conducted for the ESA section 10(a)(1)(B) permit. If that coordination results in concurrence from the agency that the proposed NWP activity and the associated incidental take were considered in the internal ESA section 7 consultation for the ESA section 10(a)(1)(B) permit, the district engineer does not need to conduct a separate ESA section 7 consultation for the proposed NWP activity. The district engineer will notify the non-federal applicant within 45 days of receipt of a complete pre-construction notification whether the ESA section 10(a)(1)(B) permit covers the proposed NWP activity or whether additional ESA section 7 consultation is required. (g) Information on the location of threatened and endangered species and their critical habitat can be obtained directly from the offices of the FWS and NMFS or their world wide web pages at http://www.fws.gov/ or http://www.fws.gov/ipac and http://www.nmfs.noaa.gov/pr/species/esa/ respectively.

19. Migratory Birds and Bald and Golden Eagles. The permittee is responsible for ensuring their action complies with the Migratory Bird Treaty Act and the Bald and Golden Eagle Protection Act. The permittee is responsible for contacting appropriate local office of the U.S. Fish and Wildlife Service to determine applicable measures to reduce impacts to migratory birds or eagles, including whether “incidental take” permits are necessary and available under the Migratory Bird Treaty Act or Bald and Golden Eagle Protection Act for a particular activity.

20. Historic Properties. (a) In cases where the district engineer determines that the activity may have the potential to cause effects to properties listed, or eligible for listing, in the National Register of Historic Places, the activity is not authorized, until the requirements of Section 106 of the National Historic Preservation Act (NHPA) have been satisfied. (b) Federal permittees should follow their own procedures for complying with the requirements of section 106 of the National Historic Preservation Act. If pre-construction notification is required for the proposed NWP activity, the Federal permittee must provide the district engineer with the appropriate documentation to demonstrate compliance with those requirements. The district engineer will verify that the appropriate documentation has been submitted. If the appropriate documentation is not submitted, then additional consultation under section 106 may be necessary. The respective federal agency is responsible for fulfilling its obligation to comply with section 106. (c) Non-federal permittees must submit a pre-construction notification to the district engineer if the NWP activity might have the potential to cause effects to any historic properties listed on, determined to be eligible for listing on, or potentially eligible for listing on the National Register of Historic Places, including previously unidentified properties. For such activities, the pre-construction notification must state which historic properties might have the potential to be affected by the proposed NWP activity or include a vicinity map indicating the location of the historic properties or the potential for the presence of historic properties. Assistance regarding information on the location of, or potential for, the presence of historic properties can be sought from the State Historic Preservation Officer, Tribal Historic Preservation Officer, or designated tribal representative, as appropriate, and the National Register of Historic Places (see 33 CFR 330.4(g)). When reviewing pre-construction notifications, district engineers will comply with the current procedures for addressing the requirements of section 106 of the National Historic Preservation Act. The district engineer shall make a reasonable and good faith effort to carry out appropriate identification efforts, which may include background research, consultation, oral history interviews, sample field investigation, and field survey. Based on the information submitted in the PCN and these identification efforts, the district engineer shall determine whether the proposed NWP activity

has the potential to cause effects on the historic properties. Section 106 consultation is not required when the district engineer determines that the activity does not have the potential to cause effects on historic properties (see 36 CFR 800.3(a)). Section 106 consultation is required when the district engineer determines that the activity has the potential to cause effects on historic properties. The district engineer will conduct consultation with consulting parties identified under 36 CFR 800.2(c) when he or she makes any of the following effect determinations for the purposes of section 106 of the NHPA: no historic properties affected, no adverse effect, or adverse effect. Where the non-Federal applicant has identified historic properties on which the activity might have the potential to cause effects and so notified the Corps, the non-Federal applicant shall not begin the activity until notified by the district engineer either that the activity has no potential to cause effects to historic properties or that NHPA section 106 consultation has been completed. (d) For non-federal permittees, the district engineer will notify the prospective permittee within 45 days of receipt of a complete pre-construction notification whether NHPA section 106 consultation is required. If NHPA section 106 consultation is required, the district engineer will notify the non-Federal applicant that he or she cannot begin the activity until section 106 consultation is completed. If the non-Federal applicant has not heard back from the Corps within 45 days, the applicant must still wait for notification from the Corps. (e) Prospective permittees should be aware that section 110k of the NHPA (54 U.S.C. 306113) prevents the Corps from granting a permit or other assistance to an applicant who, with intent to avoid the requirements of section 106 of the NHPA, has intentionally significantly adversely affected a historic property to which the permit would relate, or having legal power to prevent it, allowed such significant adverse effect to occur, unless the Corps, after consultation with the Advisory Council on Historic Preservation (ACHP), determines that circumstances justify granting such assistance despite the adverse effect created or permitted by the applicant. If circumstances justify granting the assistance, the Corps is required to notify the ACHP and provide documentation specifying the circumstances, the degree of damage to the integrity of any historic properties affected, and proposed mitigation. This documentation must include any views obtained from the applicant, SHPO/THPO, appropriate Indian tribes if the undertaking occurs on or affects historic properties on tribal lands or affects properties of interest to those tribes, and other parties known to have a legitimate interest in the impacts to the permitted activity on historic properties.

21. Discovery of Previously Unknown Remains and Artifacts. If you discover any previously unknown historic, cultural or archeological remains and artifacts while accomplishing the activity authorized by this permit, you must immediately notify the district engineer of what you have found, and to the maximum extent practicable, avoid construction activities that may affect the remains and artifacts until the required coordination has been completed. The district engineer will initiate the Federal, Tribal, and state coordination required to determine if the items or remains warrant a recovery effort or if the site is eligible for listing in the National Register of Historic Places.

22. Designated Critical Resource Waters. Critical resource waters include, NOAA-managed marine sanctuaries and marine monuments, and National Estuarine Research Reserves. The district engineer may designate, after notice and opportunity for public comment, additional waters officially designated by a state as having particular environmental or ecological significance, such as outstanding national resource waters or state natural heritage sites. The district engineer may also designate additional critical resource waters after notice and opportunity for public comment. (a) Discharges of dredged or fill material into waters of the United States are not authorized by NWPs 7, 12, 14, 16, 17, 21, 29, 31, 35, 39, 40, 42, 43, 44, 49, 50, 51, and 52 for any activity within, or directly affecting, critical resource waters, including wetlands adjacent to such waters. (b) For NWPs 3, 8, 10, 13, 15, 18, 19, 22, 23, 25, 27, 28, 30, 33, 34, 36, 37, 38, and 54, notification is required in accordance with general condition 32, for any activity proposed in the designated critical resource waters including wetlands adjacent to those waters. The district engineer may authorize activities under these NWPs only after it is determined that the impacts to the critical resource waters will be no more than minimal.

23. Mitigation. The district engineer will consider the following factors when determining appropriate and practicable mitigation necessary to ensure that the individual and cumulative adverse environmental effects are no more than minimal: (a) The activity must be designed and constructed to avoid and minimize adverse effects, both temporary and permanent, to waters of the United States to the maximum extent practicable at the project site (i.e., on site). (b) Mitigation in all its forms (avoiding, minimizing, rectifying, reducing, or compensating for resource losses) will be required to the extent necessary to ensure that the individual and cumulative adverse environmental effects are no more than minimal. (c) Compensatory mitigation at a minimum one-for-one ratio will be required for all wetland losses that exceed 1/10-acre and require pre-construction notification, unless the district engineer determines in writing that either some other form of mitigation would be more environmentally appropriate or the adverse environmental effects of the proposed activity are no more than minimal, and provides an activity-specific waiver of this requirement. For wetland losses of 1/10-acre or less that require pre-construction notification, the district engineer may determine on a case-by-case basis that compensatory mitigation is required to ensure that the activity results in only minimal adverse environmental effects. (d) For losses of streams or other open waters that require pre-construction notification, the district engineer may require compensatory mitigation to ensure that the activity results in no more than minimal adverse environmental effects. Compensatory mitigation for losses of streams should be provided, if practicable, through stream rehabilitation, enhancement, or preservation, since streams are difficult-to-replace resources (see 33 CFR 332.3(e)(3)). (e) Compensatory mitigation plans for NWP activities in or near streams or other open waters will normally include a requirement for the restoration or enhancement, maintenance, and legal protection (e.g., conservation easements) of riparian areas next to open waters. In some cases, the restoration or maintenance/protection of riparian areas may be the only compensatory mitigation required. Restored riparian areas should consist of native species. The width of the required riparian area will address documented water quality or aquatic habitat loss concerns. Normally, the riparian area will be 25 to 50 feet wide on each side of the stream, but the district engineer may require slightly wider riparian areas to address documented water quality or habitat loss concerns. If it is not possible to restore or maintain/protect a riparian area on both sides of a stream, or if the waterbody is a lake or coastal waters, then restoring or maintaining/protecting a riparian area along a single bank or shoreline may be sufficient. Where both wetlands and open waters exist on the project site, the district engineer will determine the appropriate compensatory mitigation (e.g., riparian areas and/or wetlands compensation) based on what is best for the aquatic environment on a watershed basis. In cases where riparian areas are determined to be the most appropriate form of minimization or compensatory mitigation, the district engineer may waive or reduce the requirement to provide wetland compensatory mitigation for wetland losses. (f) Compensatory mitigation projects provided to offset losses of aquatic resources must comply with the applicable provisions of 33 CFR part 332.

(1) The prospective permittee is responsible for proposing an appropriate compensatory mitigation option if compensatory mitigation is necessary to ensure that the activity results in no more than minimal adverse environmental effects. For the NWPs, the preferred mechanism for providing compensatory mitigation is mitigation bank credits or in-lieu fee program credits (see 33 CFR 332.3(b)(2) and (3)). However, if an appropriate number and type of mitigation bank or in-lieu credits are not available at the time the PCN is submitted to the district engineer, the district engineer may approve the use of permittee-responsible mitigation. (2) The amount of compensatory mitigation required by the district engineer must be sufficient to ensure that the authorized activity results in no more than minimal individual and cumulative adverse environmental effects (see 33 CFR 330.1(e)(3)). (See also 33 CFR 332.3(f)). (3) Since the likelihood of success is greater and the impacts to potentially valuable uplands are reduced, aquatic resource restoration should be the first compensatory mitigation option considered for permittee-responsible mitigation. (4) If permittee-responsible mitigation is the proposed option, the prospective permittee is responsible for submitting a mitigation plan. A conceptual or detailed mitigation plan may be used by the district engineer to make the decision on the NWP verification request, but a final mitigation plan that addresses the applicable requirements of 33 CFR 332.4(c)(2) through (14) must be approved by the district engineer

before the permittee begins work in waters of the United States, unless the district engineer determines that prior approval of the final mitigation plan is not practicable or not necessary to ensure timely completion of the required compensatory mitigation (see 33 CFR 332.3(k)(3)). (5) If mitigation bank or in-lieu fee program credits are the proposed option, the mitigation plan only needs to address the baseline conditions at the impact site and the number of credits to be provided. (6) Compensatory mitigation requirements (e.g., resource type and amount to be provided as compensatory mitigation, site protection, ecological performance standards, monitoring requirements) may be addressed through conditions added to the NWP authorization, instead of components of a compensatory mitigation plan (see 33 CFR 332.4(c)(1)(ii)).

(g) Compensatory mitigation will not be used to increase the acreage losses allowed by the acreage limits of the NWPs. For example, if an NWP has an acreage limit of 1/2-acre, it cannot be used to authorize any NWP activity resulting in the loss of greater than 1/2-acre of waters of the United States, even if compensatory mitigation is provided that replaces or restores some of the lost waters. However, compensatory mitigation can and should be used, as necessary, to ensure that an NWP activity already meeting the established acreage limits also satisfies the no more than minimal impact requirement for the NWPs. (h) Permittees may propose the use of mitigation banks, in-lieu fee programs, or permittee-responsible mitigation. When developing a compensatory mitigation proposal, the permittee must consider appropriate and practicable options consistent with the framework at 33 CFR 332.3(b). For activities resulting in the loss of marine or estuarine resources, permittee-responsible mitigation may be environmentally preferable if there are no mitigation banks or in-lieu fee programs in the area that have marine or estuarine credits available for sale or transfer to the permittee. For permittee-responsible mitigation, the special conditions of the NWP verification must clearly indicate the party or parties responsible for the implementation and performance of the compensatory mitigation project, and, if required, its long-term management. (i) Where certain functions and services of waters of the United States are permanently adversely affected by a regulated activity, such as discharges of dredged or fill material into waters of the United States that will convert a forested or scrub-shrub wetland to a herbaceous wetland in a permanently maintained utility line right-of-way, mitigation may be required to reduce the adverse environmental effects of the activity to the no more than minimal level.

24. Safety of Impoundment Structures. To ensure that all impoundment structures are safely designed, the district engineer may require non-Federal applicants to demonstrate that the structures comply with established state dam safety criteria or have been designed by qualified persons. The district engineer may also require documentation that the design has been independently reviewed by similarly qualified persons, and appropriate modifications made to ensure safety.

25. Water Quality. Where States and authorized Tribes, or EPA where applicable, have not previously certified compliance of an NWP with CWA section 401, individual 401 Water Quality Certification must be obtained or waived (see 33 CFR 330.4(c)). The district engineer or State or Tribe may require additional water quality management measures to ensure that the authorized activity does not result in more than minimal degradation of water quality.

26. Coastal Zone Management. In coastal states where an NWP has not previously received a state coastal zone management consistency concurrence, an individual state coastal zone management consistency concurrence must be obtained, or a presumption of concurrence must occur (see 33 CFR 330.4(d)). The district engineer or a State may require additional measures to ensure that the authorized activity is consistent with state coastal zone management requirements.

27. Regional and Case-By-Case Conditions. The activity must comply with any regional conditions that may have been added by the Division Engineer (see 33 CFR 330.4(e)) and with any case specific conditions added by the Corps or by the state, Indian Tribe, or U.S. EPA in its section 401 Water Quality Certification, or by the state in its Coastal Zone Management Act consistency determination.

28. Use of Multiple Nationwide Permits. The use of more than one NWP for a single and complete project is prohibited, except when the acreage loss of waters of the United States authorized by the NWPs does not exceed the acreage limit of the NWP with the highest specified acreage limit. For example, if a road crossing over tidal waters is constructed under NWP 14, with associated bank stabilization authorized by NWP 13, the maximum acreage loss of waters of the United States for the total project cannot exceed 1/3-acre.

29. Transfer of Nationwide Permit Verifications. If the permittee sells the property associated with a nationwide permit verification, the permittee may transfer the nationwide permit verification to the new owner by submitting a letter to the appropriate Corps district office to validate the transfer. A copy of the nationwide permit verification must be attached to the letter, and the letter must contain the following statement and signature: "When the structures or work authorized by this nationwide permit are still in existence at the time the property is transferred, the terms and conditions of this nationwide permit, including any special conditions, will continue to be binding on the new owner(s) of the property. To validate the transfer of this nationwide permit and the associated liabilities associated with compliance with its terms and conditions, have the transferee sign and date below."

_____
(Transferee)

_____
(Date)

30. Compliance Certification. Each permittee who receives an NWP verification letter from the Corps must provide a signed certification documenting completion of the authorized activity and implementation of any required compensatory mitigation. The success of any required permittee-responsible mitigation, including the achievement of ecological performance standards, will be addressed separately by the district engineer. The Corps will provide the permittee the certification document with the NWP verification letter. The certification document will include: (a) A statement that the authorized activity was done in accordance with the NWP authorization, including any general, regional, or activity-specific conditions; (b) A statement that the implementation of any required compensatory mitigation was completed in accordance with the permit conditions. If credits from a mitigation bank or in-lieu fee program are used to satisfy the compensatory mitigation requirements, the certification must include the documentation required by 33 CFR 332.3(l)(3) to confirm that the permittee secured the appropriate number and resource type of credits; and (c) The signature of the permittee certifying the completion of the activity and mitigation. The completed certification document must be submitted to the district engineer within 30 days of completion of the authorized activity or the implementation of any required compensatory mitigation, whichever occurs later.

31. Activities Affecting Structures or Works Built by the United States. If an NWP activity also requires permission from the Corps pursuant to 33 U.S.C. 408 because it will alter or temporarily or permanently occupy or use a U.S. Army Corps of Engineers (USACE) federally authorized Civil Works project (a "USACE project"), the prospective permittee must submit a pre-construction notification. See paragraph (b)(10) of general condition 32. An activity that requires section 408 permission is not authorized by NWP until the appropriate Corps office issues the section 408 permission to alter, occupy, or use the USACE project, and the district engineer issues a written NWP verification.

32. Pre-Construction Notification. (a) Timing. Where required by the terms of the NWP, the prospective permittee must notify the district engineer by submitting a pre-construction notification (PCN) as early as possible. The district engineer must determine if the PCN is complete within 30 calendar days of the date of receipt and, if the PCN is determined to be incomplete, notify the prospective permittee within that 30 day period to request the additional information necessary to make the PCN complete. The request must specify the information needed to make the PCN complete. As a general rule, district engineers will

request additional information necessary to make the PCN complete only once. However, if the prospective permittee does not provide all of the requested information, then the district engineer will notify the prospective permittee that the PCN is still incomplete and the PCN review process will not commence until all of the requested information has been received by the district engineer. The prospective permittee shall not begin the activity until either:

(1) He or she is notified in writing by the district engineer that the activity may proceed under the NWP with any special conditions imposed by the district or division engineer; or

(2) 45 calendar days have passed from the district engineer's receipt of the complete PCN and the prospective permittee has not received written notice from the district or division engineer. However, if the permittee was required to notify the Corps pursuant to general condition 18 that listed species or critical habitat might be affected or are in the vicinity of the activity, or to notify the Corps pursuant to general condition 20 that the activity might have the potential to cause effects to historic properties, the permittee cannot begin the activity until receiving written notification from the Corps that there is "no effect" on listed species or "no potential to cause effects" on historic properties, or that any consultation required under Section 7 of the Endangered Species Act (see 33 CFR 330.4(f)) and/or section 106 of the National Historic Preservation Act (see 33 CFR 330.4(g)) has been completed. Also, work cannot begin under NWPs 21, 49, or 50 until the permittee has received written approval from the Corps. If the proposed activity requires a written waiver to exceed specified limits of an NWP, the permittee may not begin the activity until the district engineer issues the waiver. If the district or division engineer notifies the permittee in writing that an individual permit is required within 45 calendar days of receipt of a complete PCN, the permittee cannot begin the activity until an individual permit has been obtained. Subsequently, the permittee's right to proceed under the NWP may be modified, suspended, or revoked only in accordance with the procedure set forth in 33 CFR 330.5(d)(2).

(b) Contents of Pre-Construction Notification: The PCN must be in writing and include the following information:

(1) Name, address and telephone numbers of the prospective permittee;

(2) Location of the proposed activity;

(3) Identify the specific NWP or NWP(s) the prospective permittee wants to use to authorize the proposed activity;

(4) A description of the proposed activity; the activity's purpose; direct and indirect adverse environmental effects the activity would cause, including the anticipated amount of loss of wetlands, other special aquatic sites, and other waters expected to result from the NWP activity, in acres, linear feet, or other appropriate unit of measure; a description of any proposed mitigation measures intended to reduce the adverse environmental effects caused by the proposed activity; and any other NWP(s), regional general permit(s), or individual permit(s) used or intended to be used to authorize any part of the proposed project or any related activity, including other separate and distant crossings for linear projects that require Department of the Army authorization but do not require pre-construction notification. The description of the proposed activity and any proposed mitigation measures should be sufficiently detailed to allow the district engineer to determine that the adverse environmental effects of the activity will be no more than minimal and to determine the need for compensatory mitigation or other mitigation measures. For single and complete linear projects, the PCN must include the quantity of anticipated losses of wetlands, other special aquatic sites, and other waters for each single and complete crossing of those wetlands, other special aquatic sites, and other waters. Sketches should be provided when necessary to show that the activity complies with the terms of the NWP. (Sketches usually clarify the activity and when provided results in a quicker decision. Sketches should contain sufficient detail to provide an illustrative description of the proposed activity (e.g., a conceptual plan), but do not need to be detailed engineering plans);

(5) The PCN must include a delineation of wetlands, other special aquatic sites, and other waters, such as lakes and ponds, and perennial, intermittent, and ephemeral streams, on the project site. Wetland delineations must be prepared in accordance with the current method required by the Corps. The permittee may ask the Corps to delineate the special aquatic sites and other waters on the project site, but there may be a delay if the Corps does the delineation, especially if the project site is

large or contains many wetlands, other special aquatic sites, and other waters. Furthermore, the 45 day period will not start until the delineation has been submitted to or completed by the Corps, as appropriate;

(6) If the proposed activity will result in the loss of greater than 1/10-acre of wetlands and a PCN is required, the prospective permittee must submit a statement describing how the mitigation requirement will be satisfied, or explaining why the adverse environmental effects are no more than minimal and why compensatory mitigation should not be required. As an alternative, the prospective permittee may submit a conceptual or detailed mitigation plan.

(7) For non-Federal permittees, if any listed species or designated critical habitat might be affected or is in the vicinity of the activity, or if the activity is located in designated critical habitat, the PCN must include the name(s) of those endangered or threatened species that might be affected by the proposed activity or utilize the designated critical habitat that might be affected by the proposed activity. For NWP activities that require pre-construction notification, Federal permittees must provide documentation demonstrating compliance with the Endangered Species Act;

(8) For non-Federal permittees, if the NWP activity might have the potential to cause effects to a historic property listed on, determined to be eligible for listing on, or potentially eligible for listing on, the National Register of Historic Places, the PCN must state which historic property might have the potential to be affected by the proposed activity or include a vicinity map indicating the location of the historic property. For NWP activities that require pre-construction notification, Federal permittees must provide documentation demonstrating compliance with section 106 of the National Historic Preservation Act;

(9) For an activity that will occur in a component of the National Wild and Scenic River System, or in a river officially designated by Congress as a "study river" for possible inclusion in the system while the river is in an official study status, the PCN must identify the Wild and Scenic River or the "study river" (see general condition 16); and

(10) For an activity that requires permission from the Corps pursuant to 33 U.S.C. 408 because it will alter or temporarily or permanently occupy or use a U.S. Army Corps of Engineers federally authorized civil works project, the pre-construction notification must include a statement confirming that the project proponent has submitted a written request for section 408 permission from the Corps office having jurisdiction over that USACE project.

(c) Form of Pre-Construction Notification: The standard individual permit application form (Form ENG 4345) may be used, but the completed application form must clearly indicate that it is an NWP PCN and must include all of the applicable information required in paragraphs (b)(1) through (10) of this general condition. A letter containing the required information may also be used. Applicants may provide electronic files of PCNs and supporting materials if the district engineer has established tools and procedures for electronic submittals. (d) Agency Coordination: (1) The district engineer will consider any comments from Federal and state agencies concerning the proposed activity's compliance with the terms and conditions of the NWPs and the need for mitigation to reduce the activity's adverse environmental effects so that they are no more than minimal. (2) Agency coordination is required for: (i) all NWP activities that require pre-construction notification and result in the loss of greater than 1/2-acre of waters of the United States; (ii) NWP 21, 29, 39, 40, 42, 43, 44, 50, 51, and 52 activities that require pre-construction notification and will result in the loss of greater than 300 linear feet of stream bed; (iii) NWP 13 activities in excess of 500 linear feet, fills greater than one cubic yard per running foot, or involve discharges of dredged or fill material into special aquatic sites; and (iv) NWP 54 activities in excess of 500 linear feet, or that extend into the waterbody more than 30 feet from the mean low water line in tidal waters or the ordinary high water mark in the Great Lakes. (3) When agency coordination is required, the district engineer will immediately provide (e.g., via e-mail, facsimile transmission, overnight mail, or other expeditious manner) a copy of the complete PCN to the appropriate Federal or state offices (FWS, state natural resource or water quality agency, EPA, and, if appropriate, the NMFS). With the exception of NWP 37, these agencies will have 10 calendar days from the date the material is transmitted to notify the district engineer via telephone, facsimile transmission, or e-mail that they intend to provide substantive, site-specific comments. The comments must explain why the agency believes the adverse

environmental effects will be more than minimal. If so contacted by an agency, the district engineer will wait an additional 15 calendar days before making a decision on the pre-construction notification. The district engineer will fully consider agency comments received within the specified time frame concerning the proposed activity's compliance with the terms and conditions of the NWPs, including the need for mitigation to ensure the net adverse environmental effects of the proposed activity are no more than minimal. The district engineer will provide no response to the resource agency, except as provided below. The district engineer will indicate in the administrative record associated with each pre-construction notification that the resource agencies' concerns were considered. For NWP 37, the emergency watershed protection and rehabilitation activity may proceed immediately in cases where there is an unacceptable hazard to life or a significant loss of property or economic hardship will occur. The district engineer will consider any comments received to decide whether the NWP 37 authorization should be modified, suspended, or revoked in accordance with the procedures at 33 CFR 330.5.
(4) In cases of where the prospective permittee is not a Federal agency, the district engineer will provide a response to NMFS within 30 calendar days of receipt of any Essential Fish Habitat conservation recommendations, as required by section 305(b)(4)(B) of the Magnuson-Stevens Fishery Conservation and Management Act. (5) Applicants are encouraged to provide the Corps with either electronic files or multiple copies of pre-construction notifications to expedite agency coordination.

District Engineer's Decision: 1. In reviewing the PCN for the proposed activity, the district engineer will determine whether the activity authorized by the NWP will result in more than minimal individual or cumulative adverse environmental effects or may be contrary to the public interest. If a project proponent requests authorization by a specific NWP, the district engineer should issue the NWP verification for that activity if it meets the terms and conditions of that NWP, unless he or she determines, after considering mitigation, that the proposed activity will result in more than minimal individual and cumulative adverse effects on the aquatic environment and other aspects of the public interest and exercises discretionary authority to require an individual permit for the proposed activity. For a linear project, this determination will include an evaluation of the individual crossings of waters of the United States to determine whether they individually satisfy the terms and conditions of the NWP(s), as well as the cumulative effects caused by all of the crossings authorized by NWP. If an applicant requests a waiver of the 300 linear foot limit on impacts to streams or of an otherwise applicable limit, as provided for in NWPs 13, 21, 29, 36, 39, 40, 42, 43, 44, 50, 51, 52, or 54, the district engineer will only grant the waiver upon a written determination that the NWP activity will result in only minimal individual and cumulative adverse environmental effects. For those NWPs that have a waivable 300 linear foot limit for losses of intermittent and ephemeral stream bed and a 1/2-acre limit (i.e., NWPs 21, 29, 39, 40, 42, 43, 44, 50, 51, and 52), the loss of intermittent and ephemeral stream bed, plus any other losses of jurisdictional waters and wetlands, cannot exceed 1/2-acre. 2. When making minimal adverse environmental effects determinations the district engineer will consider the direct and indirect effects caused by the NWP activity. He or she will also consider the cumulative adverse environmental effects caused by activities authorized by NWP and whether those cumulative adverse environmental effects are no more than minimal. The district engineer will also consider site specific factors, such as the environmental setting in the vicinity of the NWP activity, the type of resource that will be affected by the NWP activity, the functions provided by the aquatic resources that will be affected by the NWP activity, the degree or magnitude to which the aquatic resources perform those functions, the extent that aquatic resource functions will be lost as a result of the NWP activity (e.g., partial or complete loss), the duration of the adverse effects (temporary or permanent), the importance of the aquatic resource functions to the region (e.g., watershed or ecoregion), and mitigation required by the district engineer. If an appropriate functional or condition assessment method is available and practicable to use, that assessment method may be used by the district engineer to assist in the minimal adverse environmental effects determination. The district engineer may add case-specific special conditions to the NWP authorization to address site-specific environmental concerns. 3. If the proposed activity requires a PCN and will result in a loss of greater than 1/10-acre of wetlands, the prospective permittee should submit a mitigation proposal with the PCN. Applicants may also propose compensatory mitigation for NWP activities with smaller impacts, or

for impacts to other types of waters (e.g., streams). The district engineer will consider any proposed compensatory mitigation or other mitigation measures the applicant has included in the proposal in determining whether the net adverse environmental effects of the proposed activity are no more than minimal. The compensatory mitigation proposal may be either conceptual or detailed. If the district engineer determines that the activity complies with the terms and conditions of the NWP and that the adverse environmental effects are no more than minimal, after considering mitigation, the district engineer will notify the permittee and include any activity-specific conditions in the NWP verification the district engineer deems necessary. Conditions for compensatory mitigation requirements must comply with the appropriate provisions at 33 CFR 332.3(k). The district engineer must approve the final mitigation plan before the permittee commences work in waters of the United States, unless the district engineer determines that prior approval of the final mitigation plan is not practicable or not necessary to ensure timely completion of the required compensatory mitigation. If the prospective permittee elects to submit a compensatory mitigation plan with the PCN, the district engineer will expeditiously review the proposed compensatory mitigation plan. The district engineer must review the proposed compensatory mitigation plan within 45 calendar days of receiving a complete PCN and determine whether the proposed mitigation would ensure the NWP activity results in no more than minimal adverse environmental effects. If the net adverse environmental effects of the NWP activity (after consideration of the mitigation proposal) are determined by the district engineer to be no more than minimal, the district engineer will provide a timely written response to the applicant. The response will state that the NWP activity can proceed under the terms and conditions of the NWP, including any activity-specific conditions added to the NWP authorization by the district engineer. 4. If the district engineer determines that the adverse environmental effects of the proposed activity are more than minimal, then the district engineer will notify the applicant either: (a) that the activity does not qualify for authorization under the NWP and instruct the applicant on the procedures to seek authorization under an individual permit; (b) that the activity is authorized under the NWP subject to the applicant's submission of a mitigation plan that would reduce the adverse environmental effects so that they are no more than minimal; or (c) that the activity is authorized under the NWP with specific modifications or conditions. Where the district engineer determines that mitigation is required to ensure no more than minimal adverse environmental effects, the activity will be authorized within the 45-day PCN period (unless additional time is required to comply with general conditions 18, 20, and/or 31, or to evaluate PCNs for activities authorized by NWPs 21, 49, and 50), with activity-specific conditions that state the mitigation requirements. The authorization will include the necessary conceptual or detailed mitigation plan or a requirement that the applicant submit a mitigation plan that would reduce the adverse environmental effects so that they are no more than minimal. When compensatory mitigation is required, no work in waters of the United States may occur until the district engineer has approved a specific mitigation plan or has determined that prior approval of a final mitigation plan is not practicable or not necessary to ensure timely completion of the required compensatory mitigation.

Further Information: 1. District Engineers have authority to determine if an activity complies with the terms and conditions of an NWP. 2. NWPs do not obviate the need to obtain other federal, state, or local permits, approvals, or authorizations required by law. 3. NWPs do not grant any property rights or exclusive privileges. 4. NWPs do not authorize any injury to the property or rights of others. 5. NWPs do not authorize interference with any existing or proposed Federal project (see general condition 31).

C. CORPS SEATTLE DISTRICT REGIONAL GENERAL CONDITIONS: The following conditions apply to all NWPs for the Seattle District in Washington State, unless specified.

1. <u>Project Drawings</u>: Drawings must be submitted with pre-construction notification (PCN). Drawings must provide a clear understanding of the proposed project, and how waters of the U.S. will be affected. Drawings must be originals and not reduced copies of large-scale plans. Engineering drawings are not required. Existing and proposed site conditions (manmade and landscape features) must be drawn to scale.

2. <u>Aquatic Resources Requiring Special Protection</u>: Activities resulting in a loss of waters of the United States in mature forested wetlands, bogs and peatlands, aspen-dominated wetlands, alkali wetlands, vernal pools, camas prairie wetlands, estuarine wetlands, wetlands in coastal lagoons, and wetlands in dunal systems along the Washington coast cannot be authorized by a NWP, except by the following NWPs:

NWP 3 – Maintenance
NWP 20 – Response Operations for Oil and Hazardous Substances
NWP 32 – Completed Enforcement Actions
NWP 38 – Cleanup of Hazardous and Toxic Waste

In order to use one of the above-referenced NWPs in any of the aquatic resources requiring special protection, prospective permittees must submit a PCN to the Corps of Engineers (see NWP general condition 32) and obtain written authorization before commencing work.

<u>3. New Bank Stabilization in Tidal Waters of Puget Sound</u>: Activities involving new bank stabilization in tidal waters in Water Resource Inventory Areas (WRIAs)
8, 9, 10, 11 and 12 (within the areas identified on Figures 1a through 1e on Corps website) cannot be authorized by NWP.

4. <u>Commencement Bay</u>: The following NWPs may not be used to authorize activities located in the Commencement Bay Study Area (see Figure 2 on Corps website):

NWP 12 – Utility Line Activities (substations)
NWP 13 – Bank Stabilization
NWP 14 – Linear Transportation Projects
NWP 23 – Approved Categorical Exclusions
NWP 29 – Residential Developments
NWP 39 – Commercial and Institutional Developments
NWP 40 – Agricultural Activities
NWP 41 – Reshaping Existing Drainage Ditches
NWP 42 – Recreational Facilities
NWP 43 – Stormwater and Wastewater Management Facilities

<u>5. Bank Stabilization:</u> All projects including new or maintenance bank stabilization activities require PCN to the Corps of Engineers (see NWP general condition 32). For new bank stabilization projects only, the following must be submitted to the Corps of Engineers:

a. The cause of the erosion and the distance of any existing structures from the area(s) being stabilized.
b. The type and length of existing bank stabilization within 300 feet of the proposed project.
c. A description of current conditions and expected post-project conditions in the waterbody.
d. A statement describing how the project incorporates elements avoiding and minimizing adverse environmental effects to the aquatic environment and nearshore riparian area, including vegetation impacts in the waterbody.

In addition to a. through d., the results from any relevant geotechnical investigations can be submitted with the PCN if it describes current or expected conditions in the waterbody.

<u>6. Crossings of Waters of the United States</u>: Any project including installing, replacing, or modifying crossings of waters of the United States, such as culverts or bridges, requires submittal of a PCN to the Corps of Engineers (see NWP general condition 32). If a culvert is proposed to cross waters of the U.S. where salmonid species are present or could be present, the project must apply the stream simulation design method from the Washington Department of Fish and Wildlife located in the *Water Crossing Design Guidelines* (2013), or a design method which provides passage at all life stages at all flows where the salmonid species would naturally seek passage. If the stream simulation design method is not applied

for a culvert where salmonid species are present or could be present, the project proponent must provide a rationale in the PCN sufficient to establish one of the following:

a. The existence of extraordinary site conditions.
b. How the proposed design will provide equivalent or better fish passage and fisheries habitat benefits than the stream simulation design method.

If a culvert is proposed to cross waters of the U.S. where salmonid species are present or could be present, project proponents must provide a monitoring plan with the PCN that specifies how the proposed culvert will be assessed over a five-year period from the time of construction completion to ensure its effectiveness in providing passage at all life stages at all flows where the salmonid species would naturally seek passage. Culverts installed under emergency authorization that do not meet the above design criteria will be required to meet the above design criteria to receive an after-the-fact nationwide permit verification.

7. <u>Stream Loss</u>: A PCN is required for all activities that result in the loss of any linear feet of stream beds. No activity shall result in the loss of any linear feet of perennial stream beds or the loss of greater than 300 linear feet of intermittent and/or ephemeral stream beds. A stream may be rerouted if it is designed in a manner that maintains or restores hydrologic, ecologic, and geomorphic stream processes, provided there is not a reduction in the linear feet of stream bed. Streams include brooks, creeks, rivers, and historical waters of the U.S. that have been channelized into ditches. This condition does not apply to ditches constructed in uplands. Stream loss restrictions may be waived by the district engineer on a case-by-case basis provided the activities result in net increases of aquatic resource functions and services.

8. <u>Mitigation</u>: Pre-construction notification is required for any project that will result in permanent wetland losses that exceed 1,000 square feet. In addition to the requirements of General Condition 23 (Mitigation), compensatory mitigation at a minimum one-to-one ratio will be required for all permanent wetland losses that exceed 1,000 square feet. When a PCN is required for wetland losses less than 1,000 square feet, the Corps of Engineers may determine on a case-by-case basis that compensatory mitigation is required to ensure that the activity results in minimal adverse effects on the aquatic environment. Compensatory mitigation for impacts to marine waters, lakes, and streams will be determined on a case-by-case basis. If temporary impacts to waters of the U.S. exceed six months, the Corps of Engineers may require compensatory mitigation for temporal effects.

9. <u>Magnuson-Stevens Fishery Conservation and Management Act – Essential Fish Habitat</u>
Essential Fish Habitat (EFH) is defined as those waters and substrate necessary to fish for spawning, breeding, feeding, or growth to maturity. If EFH may be adversely affected by a proposed activity, the prospective permittee must provide a written EFH assessment with an analysis of the effects of the proposed action on EFH. The assessment must identify the type(s) of essential fish habitat (i.e., Pacific salmon, groundfish, and/or coastal-pelagic species) that may be affected. If the Corps of Engineers determines the project will adversely affect EFH, consultation with NOAA Fisheries will be required. Federal agencies should follow their own procedures for complying with the requirements of the Magnuson-Stevens Fishery Conservation and Management Act. If PCN is required for the proposed activity, Federal permittees must provide the district engineer with the appropriate documentation to demonstrate compliance with those requirements.

10. <u>Forage Fish</u>: For projects in forage fish spawning habitat, in-water work must occur within designated forage fish work windows, or when forage fish are not spawning. If working outside of a designated work window, or if forage fish work windows are closed year round, work may occur if the work window restriction is released for a period of time after a forage fish spawning survey has been conducted by a biologist approved by the Washington State Department of Fish and Wildlife (WDFW). Forage fish species with designated in-water work windows include Pacific sand lance (*Ammodytes hexapterus*), Pacific herring (*Clupea pallasi*), and surf smelt (*Hypomesus pretiosus*). This RGC does not

apply to NWP 48, *Commercial Shellfish Aquaculture Activities*. Please see specific regional conditions for NWP 48.

11. <u>Notification of Permit Requirements</u>: The permittee must provide a copy of the nationwide permit authorization letter, conditions, and permit drawings to all contractors and any other parties performing the authorized work prior to the commencement of any work in waters of the U.S. The permittee must ensure all appropriate contractors and any other parties performing the authorized work at the project site have read and understand relevant NWP conditions as well as plans, approvals, and documents referenced in the NWP letter. A copy of these documents must be maintained onsite throughout the duration of construction.

12. <u>Construction Boundaries</u>: Permittees must clearly mark all construction area boundaries before beginning work on projects that involve grading or placement of fill. Boundary markers and/or construction fencing must be maintained and clearly visible for the duration of construction. Permittees should avoid and minimize removal of native vegetation (including submerged aquatic vegetation) to the maximum extent possible.

13. <u>Temporary Impacts and Site Restoration</u>

a. Temporary impacts to waters of the U.S. must not exceed six months unless the prospective permittee requests and receives a waiver by the district engineer. Temporary impacts to waters of the U.S. must be identified in the PCN.
b. No more than 1/2 acre of waters of the U.S. may be temporarily filled unless the prospective permittee requests and receives a waiver from the district engineer (temporary fills do not affect specified limits for loss of waters associated with specific nationwide permits).
c. Native soils removed from waters of the U.S. for project construction should be stockpiled and used for site restoration. Restoration of temporarily disturbed areas must include returning the area to pre-project ground surface contours. If native soil is not available from the project site for restoration, suitable clean soil of the same textural class may be used. Other soils may be used only if identified in the PCN.
d. The permittee must revegetate disturbed areas with native plant species sufficient in number, spacing, and diversity to restore affected functions. A maintenance and monitoring plan commensurate with the impacts, may be required. Revegetation must begin as soon as site conditions allow within the same growing season as the disturbance unless the schedule is approved by the Corps of Engineers. Native plants removed from waters of the U.S. for project construction should be stockpiled and used for revegetation when feasible. Temporary Erosion and Sediment Control measures must be removed as soon as the area has established vegetation sufficient to control erosion and sediment.
e. If the Corps determines the project will result in temporary impacts of submerged aquatic vegetation (SAV) that are more than minimal, a monitoring plan must be submitted. If recovery is not achieved by the end of the monitoring period, contingencies must be implemented, and additional monitoring will be required.

This RGC does not apply to NWP 48, *Commercial Shellfish Aquaculture Activities*. Please see specific regional conditions for NWP 48.

D. CORPS REGIONAL SPECIFIC CONDITIONS FOR THIS NWP: none

E. ECOLOGY 401 CERTIFICATION: GENERAL CONDITIONS

In addition to all the Corps National and Seattle Districts' Regional permit conditions, the following State General Section 401 Water Quality Certification (Section 401) conditions apply to all Nationwide Permits whether **certified** or **partially certified** in the State of Washington.

1. **For in-water construction activities**. Ecology Section 401 review is required for projects or

activities authorized under NWPs that will cause, or may be likely to cause or contribute to an exceedance of a State water quality standard (Chapter 173-201A WAC) or sediment management standard (Chapter 173-204 WAC). State water quality standards and sediment management standards are available on Ecology's website. Note: In-water activities include any activity within a wetland and/or activities below the ordinary high water mark (OHWM).

2. **Projects or Activities Discharging to Impaired Waters**. Ecology Section 401 review is required for projects or activities authorized under NWPs if the project or activity will occur in a 303(d) listed segment of a waterbody or upstream of a listed segment and may result in further exceedances of the specific listed parameter. To determine if your project or activity is in a 303(d) listed segment of a waterbody, visit Ecology's Water Quality Assessment webpage for maps and search tools.

3. **Application**. For projects or activities that will require Ecology Section 401 review, applicants must provide Ecology with a Joint Aquatic Resources Permit Application (JARPA) along with the documentation provided to the Corps, as described in National General Condition 32, Pre-Construction Notification, including, when applicable: (a) A description of the project, including site plans, project purpose, direct and indirect adverse environmental effects the project would cause, best management practices (BMPs), and any other Department of the Army or federal agency permits used or intended to be used to authorize any part of the proposed project or any related activity. (b) Drawings indicating the Ordinary High Water Mark (OHWM), delineation of special aquatic sites and other waters of the state. Wetland delineations must be prepared in accordance with the current method required by the Corps and shall include Ecology's Wetland Rating form. Wetland rating forms are subject to review and verification by Ecology staff. Guidance for determining the OHWM is available on Ecology's website. (c) A statement describing how the mitigation requirement will be satisfied. A conceptual or detailed mitigation or restoration plan may be submitted. See State General Condition 5 for details on mitigation requirements. (d) Other applicable requirements of Corps Nationwide Permit General Condition 32, Corps Regional Conditions, or notification conditions of the applicable NWP. (e) Within 180 calendar days from receipt of applicable documents noted above **and** a copy of the final authorization letter from the Corps providing coverage for a proposed project or activity under the NWP Program Ecology will provide the applicant notice of whether an individual Section 401 will be required for the project. If Ecology fails to act within a year after receipt of **both** of these documents, Section 401 is presumed waived.

4. **Aquatic resources requiring special protection**. Certain aquatic resources are unique, difficult-to-replace components of the aquatic environment in Washington State. Activities that would affect these resources must be avoided to the greatest extent possible. Compensating for adverse impacts to high value aquatic resources is typically difficult, prohibitively expensive, and may not be possible in some landscape settings. Ecology Section 401 review is required for activities in or affecting the following aquatic resources (and not prohibited by Seattle District Regional General Condition): (a) Wetlands with special characteristics (as defined in the Washington State Wetland Rating Systems for western and eastern Washington, Ecology Publications #14-06-029 and #14-06-030):

- Estuarine wetlands.
- Wetlands of High Conservation Value.
- Bogs.
- Old-growth and mature forested wetlands.
- Wetlands in coastal lagoons.
- Interdunal wetlands.
- Vernal pools.
- Alkali wetlands.

(b) Fens, aspen-dominated wetlands, camas prairie wetlands. (c) Marine water with eelgrass (*Zostera marina*) beds (except for NWP 48). (d) Category I wetlands. (e) Category II wetlands with a habitat score ≥ 8 points. This State General Condition does not apply to the following Nationwide Permits:

NWP 20 – *Response Operations for Oil and Hazardous Substances*, NWP 32 – *Completed Enforcement Actions*

5. Mitigation. Applicants are required to show that they have followed the mitigation sequence and have first avoided and minimized impacts to aquatic resources wherever practicable. For projects requiring Ecology Section 401 review with unavoidable impacts to aquatics resources, adequate compensatory mitigation must be provided.

(a) Wetland mitigation plans submitted for Ecology review and approval shall be based on the most current guidance provided in Wetland Mitigation in Washington State, Parts 1 and 2 (available on Ecology's website) and shall, at a minimum, include the following:

i. A description of the measures taken to avoid and minimize impacts to wetlands and other waters of the U.S.

ii. The nature of the proposed impacts (i.e., acreage of wetlands and functions lost or degraded).

iii. The rationale for the mitigation site that was selected.

iv. The goals and objectives of the compensatory mitigation project.

v. How the mitigation project will be accomplished, including construction sequencing, best management practices to protect water quality, proposed performance standards for measuring success and the proposed buffer widths.

vi. How it will be maintained and monitored to assess progress towards goals and objectives. Monitoring will generally be required for a minimum of five years. For forested and scrub-shrub wetlands, 10 years of monitoring will often be necessary.

vii. How the compensatory mitigation site will be legally protected for the long term.

Refer to Wetland Mitigation in Washington State – Part 2: Developing Mitigation Plans (Ecology Publication #06-06-011b) and Selecting Wetland Mitigation Sites Using a Watershed Approach (Ecology Publications #09-06-032 (Western Washington) and #10-06-007 (Eastern Washington)) for guidance on selecting suitable mitigation sites and developing mitigation plans. Ecology encourages the use of alternative mitigation approaches, including credit/debit methodology, advance mitigation, and other programmatic approach such as mitigation banks and in-lieu fee programs. If you are interested in proposing use of an alternative mitigation approach, consult with the appropriate Ecology regional staff person. Information on alternative mitigation approaches is available on Ecology's website.

(b) Mitigation for other aquatic resource impacts will be determined on a case-by-case basis.

6. Temporary Fills. Ecology Section 401 review is required for any project or activity with temporary fill in wetlands or other waters of the state for more than 90 days, unless the applicant has received written approval from Ecology. Note: This State General Condition does not apply to projects or activities authorized under NWP 33, *Temporary Construction, Access, and Dewatering*

7. Stormwater pollution prevention: All projects that involve land disturbance or impervious surfaces must implement stormwater pollution prevention or control measures to avoid discharge of pollutants in stormwater runoff to waters of the State.

(a) For land disturbances during construction, the applicant must obtain and implement permits (e.g., Construction Stormwater General Permit) where required and follow Ecology's current stormwater manual.

(b) Following construction, prevention or treatment of on-going stormwater runoff from impervious surfaces shall be provided.

Ecology's Stormwater Management and Design Manuals and stormwater permit information are available on Ecology's website.

8. State Section 401 Review for PCNs not receiving 45-day response from the Seattle District. In the event the Seattle District Corps does not issue a NWP authorization letter within 45 calendar days of receipt of a **complete** pre-construction notification, the applicant must contact Ecology for Section 401 review prior to commencing work.

F. ECOLOGY 401 CERTIFICATION: SPECIFIC CONDITIONS FOR THIS NWP:

Certified subject to conditions. Ecology Section 401 review is required for projects or activities authorized under this NWP if:

1. The project or activities are below the Ordinary High Water Mark (OHWM) with new work being proposed outside the original footprint.

2. The proposed project or activity increases the original footprint of the structure by more than 1/10th acre in wetlands.

3. The project or activity includes adding a new structure, such as a weir, flap gate/tide gate, or culvert to the site.

G. COASTAL ZONE MANAGEMENT CONSISTENCY RESPONSE FOR THIS NWP:
(Note: This is only applies in the following counties: Clallam, Grays Harbor, Island, Jefferson, King, Kitsap, Mason, Pacific, Pierce, San Juan, Skagit, Snohomish, Thurston, Wahkiakum and Whatcom)

Response: Ecology concurs that this NWP is consistent with the CZMP, subject to the following condition: An individual Coastal Zone Management Consistency Determination is required for project or activities under this NWP if State Section 401 review is required.

General Conditions: For Non-Federal Permittees
1. Necessary Data and Information. A Coastal Zone Management Program "Certification of Consistency" form is required for projects located within a coastal county. "Certification of Consistency" forms are available on Ecology's website. The form shall include a description of the proposed project or activity and evidence of compliance with the applicable enforceable policies of the Washington Coastal Zone Management Program (CZMP). Also, a map of the site location is required.
2. Timing. Within 6 months from receipt of the necessary data and information, Ecology will provide a federal consistency determination for the proposed project or activity. If Ecology fails to act within the 6 month period, concurrence with the CZMP is presumed.

General Conditions: For Federal Permittees (Agencies)
1. Necessary Data and Information. Federal agencies shall submit the determination, information, and analysis required by 15 CFR 930.39 to obtain a federal consistency determination.
2. Timing. Within 60 days from receipt of the necessary data and information, Ecology will provide a federal consistency determination for the proposed project or activity. If Ecology fails to act within the 60 day period, concurrence with the CZMP is presumed.

US Army Corps of Engineers
Seattle District

NATIONWIDE PERMIT 27
Terms and Conditions

Effective Date: March 19, 2017

A. Description of Authorized Activities
B. U.S. Army Corps of Engineers (Corps) National General Conditions for all NWPs
C. Corps Seattle District Regional General Conditions
D. Corps Regional Specific Conditions for this NWP
E. Washington Department of Ecology (Ecology) Section 401 Water Quality Certification (401 Certification): General Conditions
F. Ecology 401 Certification: Specific Conditions for this NWP
G. Coastal Zone Management Consistency Response for this NWP

In addition to any special condition that may be required on a case-by-case basis by the District Engineer, the following terms and conditions must be met, as applicable, for a Nationwide Permit (NWP) authorization to be valid in Washington State.

A. DESCRIPTION OF AUTHORIZED ACTIVITIES

27. Aquatic Habitat Restoration, Enhancement, and Establishment Activities. Activities in waters of the United States associated with the restoration, enhancement, and establishment of tidal and non-tidal wetlands and riparian areas, the restoration and enhancement of non-tidal streams and other non-tidal open waters, and the rehabilitation or enhancement of tidal streams, tidal wetlands, and tidal open waters, provided those activities result in net increases in aquatic resource functions and services.

To be authorized by this NWP, the aquatic habitat restoration, enhancement, or establishment activity must be planned, designed, and implemented so that it results in aquatic habitat that resembles an ecological reference. An ecological reference may be based on the characteristics of an intact aquatic habitat or riparian area of the same type that exists in the region. An ecological reference may be based on a conceptual model developed from regional ecological knowledge of the target aquatic habitat type or riparian area.

To the extent that a Corps permit is required, activities authorized by this NWP include, but are not limited to: the removal of accumulated sediments; the installation, removal, and maintenance of small water control structures, dikes, and berms, as well as discharges of dredged or fill material to restore appropriate stream channel configurations after small water control structures, dikes, and berms, are removed; the installation of current deflectors; the enhancement, rehabilitation, or re-establishment of riffle and pool stream structure; the placement of in-stream habitat structures; modifications of the stream bed and/or banks to enhance, rehabilitate, or re-establish stream meanders; the removal of stream barriers, such as undersized culverts, fords, and grade control structures; the backfilling of artificial channels; the removal of existing drainage structures, such as drain tiles, and the filling, blocking, or reshaping of drainage ditches to restore wetland hydrology; the installation of structures or fills necessary to restore or enhance wetland or stream hydrology; the construction of small nesting islands; the construction of open water areas; the construction of oyster habitat over unvegetated bottom in tidal waters; shellfish seeding; activities needed to reestablish vegetation, including plowing or discing for seed bed preparation and the planting of appropriate wetland species; re-establishment of submerged aquatic vegetation in areas where those plant communities previously existed; re-establishment of tidal wetlands in tidal waters where those wetlands previously existed; mechanized land clearing to remove non-native invasive, exotic, or nuisance vegetation; and other related activities. Only native plant species should be planted at the site.

This NWP authorizes the relocation of non-tidal waters, including non-tidal wetlands and streams, on the project site provided there are net increases in aquatic resource functions and services. Except for the relocation of non-tidal waters on the project site, this NWP does not authorize the conversion of a stream or natural wetlands to another aquatic habitat type (e.g., the conversion of a stream to wetland or vice versa) or uplands. Changes in wetland plant communities that occur when wetland hydrology is more fully restored during wetland rehabilitation activities are not considered a conversion to another aquatic habitat type. This NWP does not authorize stream channelization. This NWP does not authorize the relocation of tidal waters or the conversion of tidal waters, including tidal wetlands, to other aquatic uses, such as the conversion of tidal wetlands into open water impoundments. Compensatory mitigation is not required for activities authorized by this NWP since these activities must result in net increases in aquatic resource functions and services.

Reversion. For enhancement, restoration, and establishment activities conducted: (1) In accordance with the terms and conditions of a binding stream or wetland enhancement or restoration agreement, or a wetland establishment agreement, between the landowner and the U.S. Fish and Wildlife Service (FWS), the Natural Resources Conservation Service (NRCS), the Farm Service Agency (FSA), the National Marine Fisheries Service (NMFS), the National Ocean Service (NOS), U.S. Forest Service (USFS), or their designated state cooperating agencies; (2) as voluntary wetland restoration, enhancement, and establishment actions documented by the NRCS or USDA Technical Service Provider pursuant to NRCS Field Office Technical Guide standards; or (3) on reclaimed surface coal mine lands, in accordance with a Surface Mining Control and Reclamation Act permit issued by the Office of Surface Mining Reclamation and Enforcement (OSMRE) or the applicable state agency, this NWP also authorizes any future discharge of dredged or fill material associated with the reversion of the area to its documented prior condition and use (i.e., prior to the restoration, enhancement, or establishment activities). The reversion must occur within five years after expiration of a limited term wetland restoration or establishment agreement or permit, and is authorized in these circumstances even if the discharge occurs after this NWP expires. The five-year reversion limit does not apply to agreements without time limits reached between the landowner and the FWS, NRCS, FSA, NMFS, NOS, USFS, or an appropriate state cooperating agency. This NWP also authorizes discharges of dredged or fill material in waters of the United States for the reversion of wetlands that were restored, enhanced, or established on prior-converted cropland or on uplands, in accordance with a binding agreement between the landowner and NRCS, FSA, FWS, or their designated state cooperating agencies (even though the restoration, enhancement, or establishment activity did not require a section 404 permit). The prior condition will be documented in the original agreement or permit, and the determination of return to prior conditions will be made by the Federal agency or appropriate state agency executing the agreement or permit. Before conducting any reversion activity the permittee or the appropriate Federal or state agency must notify the district engineer and include the documentation of the prior condition. Once an area has reverted to its prior physical condition, it will be subject to whatever the Corps Regulatory requirements are applicable to that type of land at the time. The requirement that the activity results in a net increase in aquatic resource functions and services does not apply to reversion activities meeting the above conditions. Except for the activities described above, this NWP does not authorize any future discharge of dredged or fill material associated with the reversion of the area to its prior condition. In such cases a separate permit would be required for any reversion.

Reporting. For those activities that do not require pre-construction notification, the permittee must submit to the district engineer a copy of: (1) The binding stream enhancement or restoration agreement or wetland enhancement, restoration, or establishment agreement, or a project description, including project plans and location map; (2) the NRCS or USDA Technical Service Provider documentation for the voluntary stream enhancement or restoration action or wetland restoration, enhancement, or establishment action; or (3) the SMCRA permit issued by OSMRE or the applicable state agency. The report must also include information on baseline ecological conditions on the project site, such as a delineation of wetlands, streams, and/or other aquatic habitats. These documents must be submitted to the district

engineer at least 30 days prior to commencing activities in waters of the United States authorized by this NWP.

Notification: The permittee must submit a pre-construction notification to the district engineer prior to commencing any activity (see general condition 32), except for the following activities: (1) Activities conducted on non-Federal public lands and private lands, in accordance with the terms and conditions of a binding stream enhancement or restoration agreement or wetland enhancement, restoration, or establishment agreement between the landowner and the FWS, NRCS, FSA, NMFS, NOS, USFS or their designated state cooperating agencies; (2) Voluntary stream or wetland restoration or enhancement action, or wetland establishment action, documented by the NRCS or USDA Technical Service Provider pursuant to NRCS Field Office Technical Guide standards; or (3) The reclamation of surface coal mine lands, in accordance with an SMCRA permit issued by the OSMRE or the applicable state agency. However, the permittee must submit a copy of the appropriate documentation to the district engineer to fulfill the reporting requirement. (Authorities: Sections 10 and 404) Note: This NWP can be used to authorize compensatory mitigation projects, including mitigation banks and in-lieu fee projects. However, this NWP does not authorize the reversion of an area used for a compensatory mitigation project to its prior condition, since compensatory mitigation is generally intended to be permanent.

B. CORPS NATIONAL GENERAL CONDITIONS FOR ALL NWPs

To qualify for NWP authorization, the prospective permittee must comply with the following general conditions, as applicable, in addition to any regional or case-specific conditions imposed by the division engineer or district engineer. Every person who may wish to obtain permit authorization under one or more NWPs, or who is currently relying on an existing or prior permit authorization under one or more NWPs, has been and is on notice that all of the provisions of 33 CFR 330.1 through 330.6 apply to every NWP authorization. Note especially 33 CFR 330.5 relating to the modification, suspension, or revocation of any NWP authorization.

1. Navigation. (a) No activity may cause more than a minimal adverse effect on navigation. (b) Any safety lights and signals prescribed by the U.S. Coast Guard, through regulations or otherwise, must be installed and maintained at the permittee's expense on authorized facilities in navigable waters of the United States. (c) The permittee understands and agrees that, if future operations by the United States require the removal, relocation, or other alteration, of the structure or work herein authorized, or if, in the opinion of the Secretary of the Army or his authorized representative, said structure or work shall cause unreasonable obstruction to the free navigation of the navigable waters, the permittee will be required, upon due notice from the Corps of Engineers, to remove, relocate, or alter the structural work or obstructions caused thereby, without expense to the United States. No claim shall be made against the United States on account of any such removal or alteration.

2. Aquatic Life Movements. No activity may substantially disrupt the necessary life cycle movements of those species of aquatic life indigenous to the waterbody, including those species that normally migrate through the area, unless the activity's primary purpose is to impound water. All permanent and temporary crossings of waterbodies shall be suitably culverted, bridged, or otherwise designed and constructed to maintain low flows to sustain the movement of those aquatic species. If a bottomless culvert cannot be used, then the crossing should be designed and constructed to minimize adverse effects to aquatic life movements.

3. Spawning Areas. Activities in spawning areas during spawning seasons must be avoided to the maximum extent practicable. Activities that result in the physical destruction (e.g., through excavation, fill, or downstream smothering by substantial turbidity) of an important spawning area are not authorized.

4. Migratory Bird Breeding Areas. Activities in waters of the United States that serve as breeding areas for migratory birds must be avoided to the maximum extent practicable.

5. Shellfish Beds. No activity may occur in areas of concentrated shellfish populations, unless the activity is directly related to a shellfish harvesting activity authorized by NWPs 4 and 48, or is a shellfish seeding or habitat restoration activity authorized by NWP 27.

6. Suitable Material. No activity may use unsuitable material (e.g., trash, debris, car bodies, asphalt, etc.). Material used for construction or discharged must be free from toxic pollutants in toxic amounts (see section 307 of the Clean Water Act).

7. Water Supply Intakes. No activity may occur in the proximity of a public water supply intake, except where the activity is for the repair or improvement of public water supply intake structures or adjacent bank stabilization.

8. Adverse Effects From Impoundments. If the activity creates an impoundment of water, adverse effects to the aquatic system due to accelerating the passage of water, and/or restricting its flow must be minimized to the maximum extent practicable.

9. Management of Water Flows. To the maximum extent practicable, the pre-construction course, condition, capacity, and location of open waters must be maintained for each activity, including stream channelization, storm water management activities, and temporary and permanent road crossings, except as provided below. The activity must be constructed to withstand expected high flows. The activity must not restrict or impede the passage of normal or high flows, unless the primary purpose of the activity is to impound water or manage high flows. The activity may alter the pre-construction course, condition, capacity, and location of open waters if it benefits the aquatic environment (e.g., stream restoration or relocation activities).

10. Fills Within 100-Year Floodplains. The activity must comply with applicable FEMA-approved state or local floodplain management requirements.

11. Equipment. Heavy equipment working in wetlands or mudflats must be placed on mats, or other measures must be taken to minimize soil disturbance.

12. Soil Erosion and Sediment Controls. Appropriate soil erosion and sediment controls must be used and maintained in effective operating condition during construction, and all exposed soil and other fills, as well as any work below the ordinary high water mark or high tide line, must be permanently stabilized at the earliest practicable date. Permittees are encouraged to perform work within waters of the United States during periods of low-flow or no-flow, or during low tides.

13. Removal of Temporary Fills. Temporary fills must be removed in their entirety and the affected areas returned to pre-construction elevations. The affected areas must be revegetated, as appropriate.

14. Proper Maintenance. Any authorized structure or fill shall be properly maintained, including maintenance to ensure public safety and compliance with applicable NWP general conditions, as well as any activity-specific conditions added by the district engineer to an NWP authorization.

15. Single and Complete Project. The activity must be a single and complete project. The same NWP cannot be used more than once for the same single and complete project.

16. Wild and Scenic Rivers. (a) No NWP activity may occur in a component of the National Wild and Scenic River System, or in a river officially designated by Congress as a “study river” for possible

inclusion in the system while the river is in an official study status, unless the appropriate Federal agency with direct management responsibility for such river, has determined in writing that the proposed activity will not adversely affect the Wild and Scenic River designation or study status. (b) If a proposed NWP activity will occur in a component of the National Wild and Scenic River System, or in a river officially designated by Congress as a "study river" for possible inclusion in the system while the river is in an official study status, the permittee must submit a pre-construction notification (see general condition 32). The district engineer will coordinate the PCN with the Federal agency with direct management responsibility for that river. The permittee shall not begin the NWP activity until notified by the district engineer that the Federal agency with direct management responsibility for that river has determined in writing that the proposed NWP activity will not adversely affect the Wild and Scenic River designation or study status. (c) Information on Wild and Scenic Rivers may be obtained from the appropriate Federal land management agency responsible for the designated Wild and Scenic River or study river (e.g., National Park Service, U.S. Forest Service, Bureau of Land Management, U.S. Fish and Wildlife Service). Information on these rivers is also available at: http://www.rivers.gov/.

17. Tribal Rights. No NWP activity may cause more than minimal adverse effects on tribal rights (including treaty rights), protected tribal resources, or tribal lands.

18. Endangered Species. (a) No activity is authorized under any NWP which is likely to directly or indirectly jeopardize the continued existence of a threatened or endangered species or a species proposed for such designation, as identified under the Federal Endangered Species Act (ESA), or which will directly or indirectly destroy or adversely modify the critical habitat of such species. No activity is authorized under any NWP which "may affect" a listed species or critical habitat, unless ESA section 7 consultation addressing the effects of the proposed activity has been completed. Direct effects are the immediate effects on listed species and critical habitat caused by the NWP activity. Indirect effects are those effects on listed species and critical habitat that are caused by the NWP activity and are later in time, but still are reasonably certain to occur. (b) Federal agencies should follow their own procedures for complying with the requirements of the ESA. If pre-construction notification is required for the proposed activity, the Federal permittee must provide the district engineer with the appropriate documentation to demonstrate compliance with those requirements. The district engineer will verify that the appropriate documentation has been submitted. If the appropriate documentation has not been submitted, additional ESA section 7 consultation may be necessary for the activity and the respective federal agency would be responsible for fulfilling its obligation under section 7 of the ESA. (c) Non-federal permittees must submit a pre-construction notification to the district engineer if any listed species or designated critical habitat might be affected or is in the vicinity of the activity, or if the activity is located in designated critical habitat, and shall not begin work on the activity until notified by the district engineer that the requirements of the ESA have been satisfied and that the activity is authorized. For activities that might affect Federally-listed endangered or threatened species or designated critical habitat, the pre-construction notification must include the name(s) of the endangered or threatened species that might be affected by the proposed activity or that utilize the designated critical habitat that might be affected by the proposed activity. The district engineer will determine whether the proposed activity "may affect" or will have "no effect" to listed species and designated critical habitat and will notify the non-Federal applicant of the Corps' determination within 45 days of receipt of a complete pre-construction notification. In cases where the non-Federal applicant has identified listed species or critical habitat that might be affected or is in the vicinity of the activity, and has so notified the Corps, the applicant shall not begin work until the Corps has provided notification that the proposed activity will have "no effect" on listed species or critical habitat, or until ESA section 7 consultation has been completed. If the non-Federal applicant has not heard back from the Corps within 45 days, the applicant must still wait for notification from the Corps. (d) As a result of formal or informal consultation with the FWS or NMFS the district engineer may add species-specific permit conditions to the NWPs. (e) Authorization of an activity by an NWP does not authorize the "take" of a threatened or endangered species as defined under the ESA. In the absence of separate authorization (e.g., an ESA Section 10 Permit, a Biological Opinion with "incidental take"

provisions, etc.) from the FWS or the NMFS, the Endangered Species Act prohibits any person subject to the jurisdiction of the United States to take a listed species, where "take" means to harass, harm, pursue, hunt, shoot, wound, kill, trap, capture, or collect, or to attempt to engage in any such conduct. The word "harm" in the definition of "take" means an act which actually kills or injures wildlife. Such an act may include significant habitat modification or degradation where it actually kills or injures wildlife by significantly impairing essential behavioral patterns, including breeding, feeding or sheltering.
(f) If the non-federal permittee has a valid ESA section 10(a)(1)(B) incidental take permit with an approved Habitat Conservation Plan for a project or a group of projects that includes the proposed NWP activity, the non-federal applicant should provide a copy of that ESA section 10(a)(1)(B) permit with the PCN required by paragraph (c) of this general condition. The district engineer will coordinate with the agency that issued the ESA section 10(a)(1)(B) permit to determine whether the proposed NWP activity and the associated incidental take were considered in the internal ESA section 7 consultation conducted for the ESA section 10(a)(1)(B) permit. If that coordination results in concurrence from the agency that the proposed NWP activity and the associated incidental take were considered in the internal ESA section 7 consultation for the ESA section 10(a)(1)(B) permit, the district engineer does not need to conduct a separate ESA section 7 consultation for the proposed NWP activity. The district engineer will notify the non-federal applicant within 45 days of receipt of a complete pre-construction notification whether the ESA section 10(a)(1)(B) permit covers the proposed NWP activity or whether additional ESA section 7 consultation is required. (g) Information on the location of threatened and endangered species and their critical habitat can be obtained directly from the offices of the FWS and NMFS or their world wide web pages at http://www.fws.gov/ or http://www.fws.gov/ipac and http://www.nmfs.noaa.gov/pr/species/esa/ respectively.

19. Migratory Birds and Bald and Golden Eagles. The permittee is responsible for ensuring their action complies with the Migratory Bird Treaty Act and the Bald and Golden Eagle Protection Act. The permittee is responsible for contacting appropriate local office of the U.S. Fish and Wildlife Service to determine applicable measures to reduce impacts to migratory birds or eagles, including whether "incidental take" permits are necessary and available under the Migratory Bird Treaty Act or Bald and Golden Eagle Protection Act for a particular activity.

20. Historic Properties. (a) In cases where the district engineer determines that the activity may have the potential to cause effects to properties listed, or eligible for listing, in the National Register of Historic Places, the activity is not authorized, until the requirements of Section 106 of the National Historic Preservation Act (NHPA) have been satisfied. (b) Federal permittees should follow their own procedures for complying with the requirements of section 106 of the National Historic Preservation Act. If pre-construction notification is required for the proposed NWP activity, the Federal permittee must provide the district engineer with the appropriate documentation to demonstrate compliance with those requirements. The district engineer will verify that the appropriate documentation has been submitted. If the appropriate documentation is not submitted, then additional consultation under section 106 may be necessary. The respective federal agency is responsible for fulfilling its obligation to comply with section 106. (c) Non-federal permittees must submit a pre-construction notification to the district engineer if the NWP activity might have the potential to cause effects to any historic properties listed on, determined to be eligible for listing on, or potentially eligible for listing on the National Register of Historic Places, including previously unidentified properties. For such activities, the pre-construction notification must state which historic properties might have the potential to be affected by the proposed NWP activity or include a vicinity map indicating the location of the historic properties or the potential for the presence of historic properties. Assistance regarding information on the location of, or potential for, the presence of historic properties can be sought from the State Historic Preservation Officer, Tribal Historic Preservation Officer, or designated tribal representative, as appropriate, and the National Register of Historic Places (see 33 CFR 330.4(g)). When reviewing pre-construction notifications, district engineers will comply with the current procedures for addressing the requirements of section 106 of the National Historic Preservation Act. The district engineer shall make a reasonable and good faith effort to carry out

appropriate identification efforts, which may include background research, consultation, oral history interviews, sample field investigation, and field survey. Based on the information submitted in the PCN and these identification efforts, the district engineer shall determine whether the proposed NWP activity has the potential to cause effects on the historic properties. Section 106 consultation is not required when the district engineer determines that the activity does not have the potential to cause effects on historic properties (see 36 CFR 800.3(a)). Section 106 consultation is required when the district engineer determines that the activity has the potential to cause effects on historic properties. The district engineer will conduct consultation with consulting parties identified under 36 CFR 800.2(c) when he or she makes any of the following effect determinations for the purposes of section 106 of the NHPA: no historic properties affected, no adverse effect, or adverse effect. Where the non-Federal applicant has identified historic properties on which the activity might have the potential to cause effects and so notified the Corps, the non-Federal applicant shall not begin the activity until notified by the district engineer either that the activity has no potential to cause effects to historic properties or that NHPA section 106 consultation has been completed. (d) For non-federal permittees, the district engineer will notify the prospective permittee within 45 days of receipt of a complete pre-construction notification whether NHPA section 106 consultation is required. If NHPA section 106 consultation is required, the district engineer will notify the non-Federal applicant that he or she cannot begin the activity until section 106 consultation is completed. If the non-Federal applicant has not heard back from the Corps within 45 days, the applicant must still wait for notification from the Corps. (e) Prospective permittees should be aware that section 110k of the NHPA (54 U.S.C. 306113) prevents the Corps from granting a permit or other assistance to an applicant who, with intent to avoid the requirements of section 106 of the NHPA, has intentionally significantly adversely affected a historic property to which the permit would relate, or having legal power to prevent it, allowed such significant adverse effect to occur, unless the Corps, after consultation with the Advisory Council on Historic Preservation (ACHP), determines that circumstances justify granting such assistance despite the adverse effect created or permitted by the applicant. If circumstances justify granting the assistance, the Corps is required to notify the ACHP and provide documentation specifying the circumstances, the degree of damage to the integrity of any historic properties affected, and proposed mitigation. This documentation must include any views obtained from the applicant, SHPO/THPO, appropriate Indian tribes if the undertaking occurs on or affects historic properties on tribal lands or affects properties of interest to those tribes, and other parties known to have a legitimate interest in the impacts to the permitted activity on historic properties.

21. Discovery of Previously Unknown Remains and Artifacts. If you discover any previously unknown historic, cultural or archeological remains and artifacts while accomplishing the activity authorized by this permit, you must immediately notify the district engineer of what you have found, and to the maximum extent practicable, avoid construction activities that may affect the remains and artifacts until the required coordination has been completed. The district engineer will initiate the Federal, Tribal, and state coordination required to determine if the items or remains warrant a recovery effort or if the site is eligible for listing in the National Register of Historic Places.

22. Designated Critical Resource Waters. Critical resource waters include, NOAA-managed marine sanctuaries and marine monuments, and National Estuarine Research Reserves. The district engineer may designate, after notice and opportunity for public comment, additional waters officially designated by a state as having particular environmental or ecological significance, such as outstanding national resource waters or state natural heritage sites. The district engineer may also designate additional critical resource waters after notice and opportunity for public comment. (a) Discharges of dredged or fill material into waters of the United States are not authorized by NWPs 7, 12, 14, 16, 17, 21, 29, 31, 35, 39, 40, 42, 43, 44, 49, 50, 51, and 52 for any activity within, or directly affecting, critical resource waters, including wetlands adjacent to such waters. (b) For NWPs 3, 8, 10, 13, 15, 18, 19, 22, 23, 25, 27, 28, 30, 33, 34, 36, 37, 38, and 54, notification is required in accordance with general condition 32, for any activity proposed in the designated critical resource waters including wetlands adjacent to those waters. The district

engineer may authorize activities under these NWPs only after it is determined that the impacts to the critical resource waters will be no more than minimal.

23. Mitigation. The district engineer will consider the following factors when determining appropriate and practicable mitigation necessary to ensure that the individual and cumulative adverse environmental effects are no more than minimal: (a) The activity must be designed and constructed to avoid and minimize adverse effects, both temporary and permanent, to waters of the United States to the maximum extent practicable at the project site (i.e., on site). (b) Mitigation in all its forms (avoiding, minimizing, rectifying, reducing, or compensating for resource losses) will be required to the extent necessary to ensure that the individual and cumulative adverse environmental effects are no more than minimal. (c) Compensatory mitigation at a minimum one-for-one ratio will be required for all wetland losses that exceed 1/10-acre and require pre-construction notification, unless the district engineer determines in writing that either some other form of mitigation would be more environmentally appropriate or the adverse environmental effects of the proposed activity are no more than minimal, and provides an activity-specific waiver of this requirement. For wetland losses of 1/10-acre or less that require pre-construction notification, the district engineer may determine on a case-by-case basis that compensatory mitigation is required to ensure that the activity results in only minimal adverse environmental effects. (d) For losses of streams or other open waters that require pre-construction notification, the district engineer may require compensatory mitigation to ensure that the activity results in no more than minimal adverse environmental effects. Compensatory mitigation for losses of streams should be provided, if practicable, through stream rehabilitation, enhancement, or preservation, since streams are difficult-to-replace resources (see 33 CFR 332.3(e)(3)). (e) Compensatory mitigation plans for NWP activities in or near streams or other open waters will normally include a requirement for the restoration or enhancement, maintenance, and legal protection (e.g., conservation easements) of riparian areas next to open waters. In some cases, the restoration or maintenance/protection of riparian areas may be the only compensatory mitigation required. Restored riparian areas should consist of native species. The width of the required riparian area will address documented water quality or aquatic habitat loss concerns. Normally, the riparian area will be 25 to 50 feet wide on each side of the stream, but the district engineer may require slightly wider riparian areas to address documented water quality or habitat loss concerns. If it is not possible to restore or maintain/protect a riparian area on both sides of a stream, or if the waterbody is a lake or coastal waters, then restoring or maintaining/protecting a riparian area along a single bank or shoreline may be sufficient. Where both wetlands and open waters exist on the project site, the district engineer will determine the appropriate compensatory mitigation (e.g., riparian areas and/or wetlands compensation) based on what is best for the aquatic environment on a watershed basis. In cases where riparian areas are determined to be the most appropriate form of minimization or compensatory mitigation, the district engineer may waive or reduce the requirement to provide wetland compensatory mitigation for wetland losses. (f) Compensatory mitigation projects provided to offset losses of aquatic resources must comply with the applicable provisions of 33 CFR part 332.

(1) The prospective permittee is responsible for proposing an appropriate compensatory mitigation option if compensatory mitigation is necessary to ensure that the activity results in no more than minimal adverse environmental effects. For the NWPs, the preferred mechanism for providing compensatory mitigation is mitigation bank credits or in-lieu fee program credits (see 33 CFR 332.3(b)(2) and (3)). However, if an appropriate number and type of mitigation bank or in-lieu credits are not available at the time the PCN is submitted to the district engineer, the district engineer may approve the use of permittee-responsible mitigation. (2) The amount of compensatory mitigation required by the district engineer must be sufficient to ensure that the authorized activity results in no more than minimal individual and cumulative adverse environmental effects (see 33 CFR 330.1(e)(3)). (See also 33 CFR 332.3(f)). (3) Since the likelihood of success is greater and the impacts to potentially valuable uplands are reduced, aquatic resource restoration should be the first compensatory mitigation option considered for permittee-responsible mitigation. (4) If permittee-responsible mitigation is the proposed option, the prospective permittee is responsible for submitting

a mitigation plan. A conceptual or detailed mitigation plan may be used by the district engineer to make the decision on the NWP verification request, but a final mitigation plan that addresses the applicable requirements of 33 CFR 332.4(c)(2) through (14) must be approved by the district engineer before the permittee begins work in waters of the United States, unless the district engineer determines that prior approval of the final mitigation plan is not practicable or not necessary to ensure timely completion of the required compensatory mitigation (see 33 CFR 332.3(k)(3)). (5) If mitigation bank or in-lieu fee program credits are the proposed option, the mitigation plan only needs to address the baseline conditions at the impact site and the number of credits to be provided. (6) Compensatory mitigation requirements (e.g., resource type and amount to be provided as compensatory mitigation, site protection, ecological performance standards, monitoring requirements) may be addressed through conditions added to the NWP authorization, instead of components of a compensatory mitigation plan (see 33 CFR 332.4(c)(1)(ii)).

(g) Compensatory mitigation will not be used to increase the acreage losses allowed by the acreage limits of the NWPs. For example, if an NWP has an acreage limit of 1/2-acre, it cannot be used to authorize any NWP activity resulting in the loss of greater than 1/2-acre of waters of the United States, even if compensatory mitigation is provided that replaces or restores some of the lost waters. However, compensatory mitigation can and should be used, as necessary, to ensure that an NWP activity already meeting the established acreage limits also satisfies the no more than minimal impact requirement for the NWPs. (h) Permittees may propose the use of mitigation banks, in-lieu fee programs, or permittee-responsible mitigation. When developing a compensatory mitigation proposal, the permittee must consider appropriate and practicable options consistent with the framework at 33 CFR 332.3(b). For activities resulting in the loss of marine or estuarine resources, permittee-responsible mitigation may be environmentally preferable if there are no mitigation banks or in-lieu fee programs in the area that have marine or estuarine credits available for sale or transfer to the permittee. For permittee-responsible mitigation, the special conditions of the NWP verification must clearly indicate the party or parties responsible for the implementation and performance of the compensatory mitigation project, and, if required, its long-term management. (i) Where certain functions and services of waters of the United States are permanently adversely affected by a regulated activity, such as discharges of dredged or fill material into waters of the United States that will convert a forested or scrub-shrub wetland to a herbaceous wetland in a permanently maintained utility line right-of-way, mitigation may be required to reduce the adverse environmental effects of the activity to the no more than minimal level.

24. Safety of Impoundment Structures. To ensure that all impoundment structures are safely designed, the district engineer may require non-Federal applicants to demonstrate that the structures comply with established state dam safety criteria or have been designed by qualified persons. The district engineer may also require documentation that the design has been independently reviewed by similarly qualified persons, and appropriate modifications made to ensure safety.

25. Water Quality. Where States and authorized Tribes, or EPA where applicable, have not previously certified compliance of an NWP with CWA section 401, individual 401 Water Quality Certification must be obtained or waived (see 33 CFR 330.4(c)). The district engineer or State or Tribe may require additional water quality management measures to ensure that the authorized activity does not result in more than minimal degradation of water quality.

26. Coastal Zone Management. In coastal states where an NWP has not previously received a state coastal zone management consistency concurrence, an individual state coastal zone management consistency concurrence must be obtained, or a presumption of concurrence must occur (see 33 CFR 330.4(d)). The district engineer or a State may require additional measures to ensure that the authorized activity is consistent with state coastal zone management requirements.

27. Regional and Case-By-Case Conditions. The activity must comply with any regional conditions that may have been added by the Division Engineer (see 33 CFR 330.4(e)) and with any case specific conditions added by the Corps or by the state, Indian Tribe, or U.S. EPA in its section 401 Water Quality Certification, or by the state in its Coastal Zone Management Act consistency determination.

28. Use of Multiple Nationwide Permits. The use of more than one NWP for a single and complete project is prohibited, except when the acreage loss of waters of the United States authorized by the NWPs does not exceed the acreage limit of the NWP with the highest specified acreage limit. For example, if a road crossing over tidal waters is constructed under NWP 14, with associated bank stabilization authorized by NWP 13, the maximum acreage loss of waters of the United States for the total project cannot exceed 1/3-acre.

29. Transfer of Nationwide Permit Verifications. If the permittee sells the property associated with a nationwide permit verification, the permittee may transfer the nationwide permit verification to the new owner by submitting a letter to the appropriate Corps district office to validate the transfer. A copy of the nationwide permit verification must be attached to the letter, and the letter must contain the following statement and signature: "When the structures or work authorized by this nationwide permit are still in existence at the time the property is transferred, the terms and conditions of this nationwide permit, including any special conditions, will continue to be binding on the new owner(s) of the property. To validate the transfer of this nationwide permit and the associated liabilities associated with compliance with its terms and conditions, have the transferee sign and date below."

_____
(Transferee)

_____
(Date)

30. Compliance Certification. Each permittee who receives an NWP verification letter from the Corps must provide a signed certification documenting completion of the authorized activity and implementation of any required compensatory mitigation. The success of any required permittee-responsible mitigation, including the achievement of ecological performance standards, will be addressed separately by the district engineer. The Corps will provide the permittee the certification document with the NWP verification letter. The certification document will include: (a) A statement that the authorized activity was done in accordance with the NWP authorization, including any general, regional, or activity-specific conditions; (b) A statement that the implementation of any required compensatory mitigation was completed in accordance with the permit conditions. If credits from a mitigation bank or in-lieu fee program are used to satisfy the compensatory mitigation requirements, the certification must include the documentation required by 33 CFR 332.3(l)(3) to confirm that the permittee secured the appropriate number and resource type of credits; and (c) The signature of the permittee certifying the completion of the activity and mitigation. The completed certification document must be submitted to the district engineer within 30 days of completion of the authorized activity or the implementation of any required compensatory mitigation, whichever occurs later.

31. Activities Affecting Structures or Works Built by the United States. If an NWP activity also requires permission from the Corps pursuant to 33 U.S.C. 408 because it will alter or temporarily or permanently occupy or use a U.S. Army Corps of Engineers (USACE) federally authorized Civil Works project (a "USACE project"), the prospective permittee must submit a pre-construction notification. See paragraph (b)(10) of general condition 32. An activity that requires section 408 permission is not authorized by NWP until the appropriate Corps office issues the section 408 permission to alter, occupy, or use the USACE project, and the district engineer issues a written NWP verification.

32. Pre-Construction Notification. (a) Timing. Where required by the terms of the NWP, the prospective permittee must notify the district engineer by submitting a pre-construction notification (PCN) as early as

possible. The district engineer must determine if the PCN is complete within 30 calendar days of the date of receipt and, if the PCN is determined to be incomplete, notify the prospective permittee within that 30 day period to request the additional information necessary to make the PCN complete. The request must specify the information needed to make the PCN complete. As a general rule, district engineers will request additional information necessary to make the PCN complete only once. However, if the prospective permittee does not provide all of the requested information, then the district engineer will notify the prospective permittee that the PCN is still incomplete and the PCN review process will not commence until all of the requested information has been received by the district engineer. The prospective permittee shall not begin the activity until either:

(1) He or she is notified in writing by the district engineer that the activity may proceed under the NWP with any special conditions imposed by the district or division engineer; or

(2) 45 calendar days have passed from the district engineer's receipt of the complete PCN and the prospective permittee has not received written notice from the district or division engineer. However, if the permittee was required to notify the Corps pursuant to general condition 18 that listed species or critical habitat might be affected or are in the vicinity of the activity, or to notify the Corps pursuant to general condition 20 that the activity might have the potential to cause effects to historic properties, the permittee cannot begin the activity until receiving written notification from the Corps that there is "no effect" on listed species or "no potential to cause effects" on historic properties, or that any consultation required under Section 7 of the Endangered Species Act (see 33 CFR 330.4(f)) and/or section 106 of the National Historic Preservation Act (see 33 CFR 330.4(g)) has been completed. Also, work cannot begin under NWPs 21, 49, or 50 until the permittee has received written approval from the Corps. If the proposed activity requires a written waiver to exceed specified limits of an NWP, the permittee may not begin the activity until the district engineer issues the waiver. If the district or division engineer notifies the permittee in writing that an individual permit is required within 45 calendar days of receipt of a complete PCN, the permittee cannot begin the activity until an individual permit has been obtained. Subsequently, the permittee's right to proceed under the NWP may be modified, suspended, or revoked only in accordance with the procedure set forth in 33 CFR 330.5(d)(2).

(b) Contents of Pre-Construction Notification: The PCN must be in writing and include the following information:

(1) Name, address and telephone numbers of the prospective permittee;

(2) Location of the proposed activity;

(3) Identify the specific NWP or NWP(s) the prospective permittee wants to use to authorize the proposed activity;

(4) A description of the proposed activity; the activity's purpose; direct and indirect adverse environmental effects the activity would cause, including the anticipated amount of loss of wetlands, other special aquatic sites, and other waters expected to result from the NWP activity, in acres, linear feet, or other appropriate unit of measure; a description of any proposed mitigation measures intended to reduce the adverse environmental effects caused by the proposed activity; and any other NWP(s), regional general permit(s), or individual permit(s) used or intended to be used to authorize any part of the proposed project or any related activity, including other separate and distant crossings for linear projects that require Department of the Army authorization but do not require pre-construction notification. The description of the proposed activity and any proposed mitigation measures should be sufficiently detailed to allow the district engineer to determine that the adverse environmental effects of the activity will be no more than minimal and to determine the need for compensatory mitigation or other mitigation measures. For single and complete linear projects, the PCN must include the quantity of anticipated losses of wetlands, other special aquatic sites, and other waters for each single and complete crossing of those wetlands, other special aquatic sites, and other waters. Sketches should be provided when necessary to show that the activity complies with the terms of the NWP. (Sketches usually clarify the activity and when provided results in a quicker decision. Sketches should contain sufficient detail to provide an illustrative description of the proposed activity (e.g., a conceptual plan), but do not need to be detailed engineering plans);

(5) The PCN must include a delineation of wetlands, other special aquatic sites, and other waters, such as lakes and ponds, and perennial, intermittent, and ephemeral streams, on the project site. Wetland delineations must be prepared in accordance with the current method required by the Corps. The permittee may ask the Corps to delineate the special aquatic sites and other waters on the project site, but there may be a delay if the Corps does the delineation, especially if the project site is large or contains many wetlands, other special aquatic sites, and other waters. Furthermore, the 45 day period will not start until the delineation has been submitted to or completed by the Corps, as appropriate;

(6) If the proposed activity will result in the loss of greater than 1/10-acre of wetlands and a PCN is required, the prospective permittee must submit a statement describing how the mitigation requirement will be satisfied, or explaining why the adverse environmental effects are no more than minimal and why compensatory mitigation should not be required. As an alternative, the prospective permittee may submit a conceptual or detailed mitigation plan.

(7) For non-Federal permittees, if any listed species or designated critical habitat might be affected or is in the vicinity of the activity, or if the activity is located in designated critical habitat, the PCN must include the name(s) of those endangered or threatened species that might be affected by the proposed activity or utilize the designated critical habitat that might be affected by the proposed activity. For NWP activities that require pre-construction notification, Federal permittees must provide documentation demonstrating compliance with the Endangered Species Act;

(8) For non-Federal permittees, if the NWP activity might have the potential to cause effects to a historic property listed on, determined to be eligible for listing on, or potentially eligible for listing on, the National Register of Historic Places, the PCN must state which historic property might have the potential to be affected by the proposed activity or include a vicinity map indicating the location of the historic property. For NWP activities that require pre-construction notification, Federal permittees must provide documentation demonstrating compliance with section 106 of the National Historic Preservation Act;

(9) For an activity that will occur in a component of the National Wild and Scenic River System, or in a river officially designated by Congress as a "study river" for possible inclusion in the system while the river is in an official study status, the PCN must identify the Wild and Scenic River or the "study river" (see general condition 16); and

(10) For an activity that requires permission from the Corps pursuant to 33 U.S.C. 408 because it will alter or temporarily or permanently occupy or use a U.S. Army Corps of Engineers federally authorized civil works project, the pre-construction notification must include a statement confirming that the project proponent has submitted a written request for section 408 permission from the Corps office having jurisdiction over that USACE project.

(c) Form of Pre-Construction Notification: The standard individual permit application form (Form ENG 4345) may be used, but the completed application form must clearly indicate that it is an NWP PCN and must include all of the applicable information required in paragraphs (b)(1) through (10) of this general condition. A letter containing the required information may also be used. Applicants may provide electronic files of PCNs and supporting materials if the district engineer has established tools and procedures for electronic submittals. (d) Agency Coordination: (1) The district engineer will consider any comments from Federal and state agencies concerning the proposed activity's compliance with the terms and conditions of the NWPs and the need for mitigation to reduce the activity's adverse environmental effects so that they are no more than minimal. (2) Agency coordination is required for: (i) all NWP activities that require pre-construction notification and result in the loss of greater than 1/2-acre of waters of the United States; (ii) NWP 21, 29, 39, 40, 42, 43, 44, 50, 51, and 52 activities that require pre-construction notification and will result in the loss of greater than 300 linear feet of stream bed; (iii) NWP 13 activities in excess of 500 linear feet, fills greater than one cubic yard per running foot, or involve discharges of dredged or fill material into special aquatic sites; and (iv) NWP 54 activities in excess of 500 linear feet, or that extend into the waterbody more than 30 feet from the mean low water line in tidal waters or the ordinary high water mark in the Great Lakes. (3) When agency coordination is required, the district engineer will immediately provide (e.g., via e-mail, facsimile transmission, overnight mail, or

other expeditious manner) a copy of the complete PCN to the appropriate Federal or state offices (FWS, state natural resource or water quality agency, EPA, and, if appropriate, the NMFS). With the exception of NWP 37, these agencies will have 10 calendar days from the date the material is transmitted to notify the district engineer via telephone, facsimile transmission, or e-mail that they intend to provide substantive, site-specific comments. The comments must explain why the agency believes the adverse environmental effects will be more than minimal. If so contacted by an agency, the district engineer will wait an additional 15 calendar days before making a decision on the pre-construction notification. The district engineer will fully consider agency comments received within the specified time frame concerning the proposed activity's compliance with the terms and conditions of the NWPs, including the need for mitigation to ensure the net adverse environmental effects of the proposed activity are no more than minimal. The district engineer will provide no response to the resource agency, except as provided below. The district engineer will indicate in the administrative record associated with each pre-construction notification that the resource agencies' concerns were considered. For NWP 37, the emergency watershed protection and rehabilitation activity may proceed immediately in cases where there is an unacceptable hazard to life or a significant loss of property or economic hardship will occur. The district engineer will consider any comments received to decide whether the NWP 37 authorization should be modified, suspended, or revoked in accordance with the procedures at 33 CFR 330.5.
(4) In cases of where the prospective permittee is not a Federal agency, the district engineer will provide a response to NMFS within 30 calendar days of receipt of any Essential Fish Habitat conservation recommendations, as required by section 305(b)(4)(B) of the Magnuson-Stevens Fishery Conservation and Management Act. (5) Applicants are encouraged to provide the Corps with either electronic files or multiple copies of pre-construction notifications to expedite agency coordination.

District Engineer's Decision: 1. In reviewing the PCN for the proposed activity, the district engineer will determine whether the activity authorized by the NWP will result in more than minimal individual or cumulative adverse environmental effects or may be contrary to the public interest. If a project proponent requests authorization by a specific NWP, the district engineer should issue the NWP verification for that activity if it meets the terms and conditions of that NWP, unless he or she determines, after considering mitigation, that the proposed activity will result in more than minimal individual and cumulative adverse effects on the aquatic environment and other aspects of the public interest and exercises discretionary authority to require an individual permit for the proposed activity. For a linear project, this determination will include an evaluation of the individual crossings of waters of the United States to determine whether they individually satisfy the terms and conditions of the NWP(s), as well as the cumulative effects caused by all of the crossings authorized by NWP. If an applicant requests a waiver of the 300 linear foot limit on impacts to streams or of an otherwise applicable limit, as provided for in NWPs 13, 21, 29, 36, 39, 40, 42, 43, 44, 50, 51, 52, or 54, the district engineer will only grant the waiver upon a written determination that the NWP activity will result in only minimal individual and cumulative adverse environmental effects. For those NWPs that have a waivable 300 linear foot limit for losses of intermittent and ephemeral stream bed and a 1/2-acre limit (i.e., NWPs 21, 29, 39, 40, 42, 43, 44, 50, 51, and 52), the loss of intermittent and ephemeral stream bed, plus any other losses of jurisdictional waters and wetlands, cannot exceed 1/2-acre. 2. When making minimal adverse environmental effects determinations the district engineer will consider the direct and indirect effects caused by the NWP activity. He or she will also consider the cumulative adverse environmental effects caused by activities authorized by NWP and whether those cumulative adverse environmental effects are no more than minimal. The district engineer will also consider site specific factors, such as the environmental setting in the vicinity of the NWP activity, the type of resource that will be affected by the NWP activity, the functions provided by the aquatic resources that will be affected by the NWP activity, the degree or magnitude to which the aquatic resources perform those functions, the extent that aquatic resource functions will be lost as a result of the NWP activity (e.g., partial or complete loss), the duration of the adverse effects (temporary or permanent), the importance of the aquatic resource functions to the region (e.g., watershed or ecoregion), and mitigation required by the district engineer. If an appropriate functional or condition assessment method is available and practicable to use, that assessment method

may be used by the district engineer to assist in the minimal adverse environmental effects determination. The district engineer may add case-specific special conditions to the NWP authorization to address site-specific environmental concerns. 3. If the proposed activity requires a PCN and will result in a loss of greater than 1/10-acre of wetlands, the prospective permittee should submit a mitigation proposal with the PCN. Applicants may also propose compensatory mitigation for NWP activities with smaller impacts, or for impacts to other types of waters (e.g., streams). The district engineer will consider any proposed compensatory mitigation or other mitigation measures the applicant has included in the proposal in determining whether the net adverse environmental effects of the proposed activity are no more than minimal. The compensatory mitigation proposal may be either conceptual or detailed. If the district engineer determines that the activity complies with the terms and conditions of the NWP and that the adverse environmental effects are no more than minimal, after considering mitigation, the district engineer will notify the permittee and include any activity-specific conditions in the NWP verification the district engineer deems necessary. Conditions for compensatory mitigation requirements must comply with the appropriate provisions at 33 CFR 332.3(k). The district engineer must approve the final mitigation plan before the permittee commences work in waters of the United States, unless the district engineer determines that prior approval of the final mitigation plan is not practicable or not necessary to ensure timely completion of the required compensatory mitigation. If the prospective permittee elects to submit a compensatory mitigation plan with the PCN, the district engineer will expeditiously review the proposed compensatory mitigation plan. The district engineer must review the proposed compensatory mitigation plan within 45 calendar days of receiving a complete PCN and determine whether the proposed mitigation would ensure the NWP activity results in no more than minimal adverse environmental effects. If the net adverse environmental effects of the NWP activity (after consideration of the mitigation proposal) are determined by the district engineer to be no more than minimal, the district engineer will provide a timely written response to the applicant. The response will state that the NWP activity can proceed under the terms and conditions of the NWP, including any activity-specific conditions added to the NWP authorization by the district engineer. 4. If the district engineer determines that the adverse environmental effects of the proposed activity are more than minimal, then the district engineer will notify the applicant either: (a) that the activity does not qualify for authorization under the NWP and instruct the applicant on the procedures to seek authorization under an individual permit; (b) that the activity is authorized under the NWP subject to the applicant's submission of a mitigation plan that would reduce the adverse environmental effects so that they are no more than minimal; or (c) that the activity is authorized under the NWP with specific modifications or conditions. Where the district engineer determines that mitigation is required to ensure no more than minimal adverse environmental effects, the activity will be authorized within the 45-day PCN period (unless additional time is required to comply with general conditions 18, 20, and/or 31, or to evaluate PCNs for activities authorized by NWPs 21, 49, and 50), with activity-specific conditions that state the mitigation requirements. The authorization will include the necessary conceptual or detailed mitigation plan or a requirement that the applicant submit a mitigation plan that would reduce the adverse environmental effects so that they are no more than minimal. When compensatory mitigation is required, no work in waters of the United States may occur until the district engineer has approved a specific mitigation plan or has determined that prior approval of a final mitigation plan is not practicable or not necessary to ensure timely completion of the required compensatory mitigation.

Further Information: 1. District Engineers have authority to determine if an activity complies with the terms and conditions of an NWP. 2. NWPs do not obviate the need to obtain other federal, state, or local permits, approvals, or authorizations required by law. 3. NWPs do not grant any property rights or exclusive privileges. 4. NWPs do not authorize any injury to the property or rights of others. 5. NWPs do not authorize interference with any existing or proposed Federal project (see general condition 31).

C. CORPS SEATTLE DISTRICT REGIONAL GENERAL CONDITIONS: The following conditions apply to all NWPs for the Seattle District in Washington State, unless specified.

1. <u>Project Drawings</u>: Drawings must be submitted with pre-construction notification (PCN). Drawings must provide a clear understanding of the proposed project, and how waters of the U.S. will be affected. Drawings must be originals and not reduced copies of large-scale plans. Engineering drawings are not required. Existing and proposed site conditions (manmade and landscape features) must be drawn to scale.

2. <u>Aquatic Resources Requiring Special Protection</u>: Activities resulting in a loss of waters of the United States in mature forested wetlands, bogs and peatlands, aspen-dominated wetlands, alkali wetlands, vernal pools, camas prairie wetlands, estuarine wetlands, wetlands in coastal lagoons, and wetlands in dunal systems along the Washington coast cannot be authorized by a NWP, except by the following NWPs:

NWP 3 – Maintenance
NWP 20 – Response Operations for Oil and Hazardous Substances
NWP 32 – Completed Enforcement Actions
NWP 38 – Cleanup of Hazardous and Toxic Waste

In order to use one of the above-referenced NWPs in any of the aquatic resources requiring special protection, prospective permittees must submit a PCN to the Corps of Engineers (see NWP general condition 32) and obtain written authorization before commencing work.

<u>3. New Bank Stabilization in Tidal Waters of Puget Sound</u>: Activities involving new bank stabilization in tidal waters in Water Resource Inventory Areas (WRIAs)
8, 9, 10, 11 and 12 (within the areas identified on Figures 1a through 1e on Corps website) cannot be authorized by NWP.

4. <u>Commencement Bay</u>: The following NWPs may not be used to authorize activities located in the Commencement Bay Study Area (see Figure 2 on Corps website):

NWP 12 – Utility Line Activities (substations)
NWP 13 – Bank Stabilization
NWP 14 – Linear Transportation Projects
NWP 23 – Approved Categorical Exclusions
NWP 29 – Residential Developments
NWP 39 – Commercial and Institutional Developments
NWP 40 – Agricultural Activities
NWP 41 – Reshaping Existing Drainage Ditches
NWP 42 – Recreational Facilities
NWP 43 – Stormwater and Wastewater Management Facilities

<u>5. Bank Stabilization:</u> All projects including new or maintenance bank stabilization activities require PCN to the Corps of Engineers (see NWP general condition 32). For new bank stabilization projects only, the following must be submitted to the Corps of Engineers:

a. The cause of the erosion and the distance of any existing structures from the area(s) being stabilized.
b. The type and length of existing bank stabilization within 300 feet of the proposed project.
c. A description of current conditions and expected post-project conditions in the waterbody.
d. A statement describing how the project incorporates elements avoiding and minimizing adverse environmental effects to the aquatic environment and nearshore riparian area, including vegetation impacts in the waterbody.

In addition to a. through d., the results from any relevant geotechnical investigations can be submitted with the PCN if it describes current or expected conditions in the waterbody.

<u>6. Crossings of Waters of the United States</u>: Any project including installing, replacing, or modifying crossings of waters of the United States, such as culverts or bridges, requires submittal of a PCN to the

Corps of Engineers (see NWP general condition 32). If a culvert is proposed to cross waters of the U.S. where salmonid species are present or could be present, the project must apply the stream simulation design method from the Washington Department of Fish and Wildlife located in the *Water Crossing Design Guidelines* (2013), or a design method which provides passage at all life stages at all flows where the salmonid species would naturally seek passage. If the stream simulation design method is not applied for a culvert where salmonid species are present or could be present, the project proponent must provide a rationale in the PCN sufficient to establish one of the following:

a. The existence of extraordinary site conditions.
b. How the proposed design will provide equivalent or better fish passage and fisheries habitat benefits than the stream simulation design method.

If a culvert is proposed to cross waters of the U.S. where salmonid species are present or could be present, project proponents must provide a monitoring plan with the PCN that specifies how the proposed culvert will be assessed over a five-year period from the time of construction completion to ensure its effectiveness in providing passage at all life stages at all flows where the salmonid species would naturally seek passage. Culverts installed under emergency authorization that do not meet the above design criteria will be required to meet the above design criteria to receive an after-the-fact nationwide permit verification.

7. <u>Stream Loss</u>: A PCN is required for all activities that result in the loss of any linear feet of stream beds. No activity shall result in the loss of any linear feet of perennial stream beds or the loss of greater than 300 linear feet of intermittent and/or ephemeral stream beds. A stream may be rerouted if it is designed in a manner that maintains or restores hydrologic, ecologic, and geomorphic stream processes, provided there is not a reduction in the linear feet of stream bed. Streams include brooks, creeks, rivers, and historical waters of the U.S. that have been channelized into ditches. This condition does not apply to ditches constructed in uplands. Stream loss restrictions may be waived by the district engineer on a case-by-case basis provided the activities result in net increases of aquatic resource functions and services.

8. <u>Mitigation</u>: Pre-construction notification is required for any project that will result in permanent wetland losses that exceed 1,000 square feet. In addition to the requirements of General Condition 23 (Mitigation), compensatory mitigation at a minimum one-to-one ratio will be required for all permanent wetland losses that exceed 1,000 square feet. When a PCN is required for wetland losses less than 1,000 square feet, the Corps of Engineers may determine on a case-by-case basis that compensatory mitigation is required to ensure that the activity results in minimal adverse effects on the aquatic environment. Compensatory mitigation for impacts to marine waters, lakes, and streams will be determined on a case-by-case basis. If temporary impacts to waters of the U.S. exceed six months, the Corps of Engineers may require compensatory mitigation for temporal effects.

9. <u>Magnuson-Stevens Fishery Conservation and Management Act – Essential Fish Habitat</u>
Essential Fish Habitat (EFH) is defined as those waters and substrate necessary to fish for spawning, breeding, feeding, or growth to maturity. If EFH may be adversely affected by a proposed activity, the prospective permittee must provide a written EFH assessment with an analysis of the effects of the proposed action on EFH. The assessment must identify the type(s) of essential fish habitat (i.e., Pacific salmon, groundfish, and/or coastal-pelagic species) that may be affected. If the Corps of Engineers determines the project will adversely affect EFH, consultation with NOAA Fisheries will be required. Federal agencies should follow their own procedures for complying with the requirements of the Magnuson-Stevens Fishery Conservation and Management Act. If PCN is required for the proposed activity, Federal permittees must provide the district engineer with the appropriate documentation to demonstrate compliance with those requirements.

10. <u>Forage Fish</u>: For projects in forage fish spawning habitat, in-water work must occur within designated forage fish work windows, or when forage fish are not spawning. If working outside of a designated work window, or if forage fish work windows are closed year round, work may occur if the

work window restriction is released for a period of time after a forage fish spawning survey has been conducted by a biologist approved by the Washington State Department of Fish and Wildlife (WDFW). Forage fish species with designated in-water work windows include Pacific sand lance (*Ammodytes hexapterus*), Pacific herring (*Clupea pallasi*), and surf smelt (*Hypomesus pretiosus*). This RGC does not apply to NWP 48, *Commercial Shellfish Aquaculture Activities*. Please see specific regional conditions for NWP 48.

11. <u>Notification of Permit Requirements</u>: The permittee must provide a copy of the nationwide permit authorization letter, conditions, and permit drawings to all contractors and any other parties performing the authorized work prior to the commencement of any work in waters of the U.S. The permittee must ensure all appropriate contractors and any other parties performing the authorized work at the project site have read and understand relevant NWP conditions as well as plans, approvals, and documents referenced in the NWP letter. A copy of these documents must be maintained onsite throughout the duration of construction.

12. <u>Construction Boundaries</u>: Permittees must clearly mark all construction area boundaries before beginning work on projects that involve grading or placement of fill. Boundary markers and/or construction fencing must be maintained and clearly visible for the duration of construction. Permittees should avoid and minimize removal of native vegetation (including submerged aquatic vegetation) to the maximum extent possible.

13. <u>Temporary Impacts and Site Restoration</u>

a. Temporary impacts to waters of the U.S. must not exceed six months unless the prospective permittee requests and receives a waiver by the district engineer. Temporary impacts to waters of the U.S. must be identified in the PCN.
b. No more than 1/2 acre of waters of the U.S. may be temporarily filled unless the prospective permittee requests and receives a waiver from the district engineer (temporary fills do not affect specified limits for loss of waters associated with specific nationwide permits).
c. Native soils removed from waters of the U.S. for project construction should be stockpiled and used for site restoration. Restoration of temporarily disturbed areas must include returning the area to pre-project ground surface contours. If native soil is not available from the project site for restoration, suitable clean soil of the same textural class may be used. Other soils may be used only if identified in the PCN.
d. The permittee must revegetate disturbed areas with native plant species sufficient in number, spacing, and diversity to restore affected functions. A maintenance and monitoring plan commensurate with the impacts, may be required. Revegetation must begin as soon as site conditions allow within the same growing season as the disturbance unless the schedule is approved by the Corps of Engineers. Native plants removed from waters of the U.S. for project construction should be stockpiled and used for revegetation when feasible. Temporary Erosion and Sediment Control measures must be removed as soon as the area has established vegetation sufficient to control erosion and sediment.
e. If the Corps determines the project will result in temporary impacts of submerged aquatic vegetation (SAV) that are more than minimal, a monitoring plan must be submitted. If recovery is not achieved by the end of the monitoring period, contingencies must be implemented, and additional monitoring will be required.

This RGC does not apply to NWP 48, *Commercial Shellfish Aquaculture Activities*. Please see specific regional conditions for NWP 48.

D. CORPS REGIONAL SPECIFIC CONDITIONS FOR THIS NWP:

1. A pre-construction notification (PCN) must be submitted to the district engineer (see NWP general condition 32) for any proposed project located in a Department of the Army permit compensatory mitigation site, Comprehensive Environmental Response, Compensation and Liability Act (Superfund)

site, Resource Conservation and Recovery Act hazardous waste clean-up site, Washington State Department of Ecology compensatory mitigation site, or Washington State Model Toxics Control Act clean-up site.

2. For projects subject to PCN, if there is a loss of waters of the U.S., the project proponent must explain in the PCN why the loss is necessary and show how it would be fully offset by the beneficial elements of the project.

3. The PCN must contain a description of pre-project site conditions (including photographs), aquatic functions the site provides, and benefits anticipated from project construction.

4. The project proponent must include maintenance and monitoring plans with the PCN.

5. Restoration projects involving shellfish seeding must use shellfish native to the watershed.

E. ECOLOGY 401 CERTIFICATION: GENERAL CONDITIONS

In addition to all the Corps National and Seattle Districts' Regional permit conditions, the following State General Section 401 Water Quality Certification (Section 401) conditions apply to all Nationwide Permits whether **certified** or **partially certified** in the State of Washington.

1. **For in-water construction activities**. Ecology Section 401 review is required for projects or activities authorized under NWPs that will cause, or may be likely to cause or contribute to an exceedance of a State water quality standard (Chapter 173-201A WAC) or sediment management standard (Chapter 173-204 WAC). State water quality standards and sediment management standards are available on Ecology's website. Note: In-water activities include any activity within a wetland and/or activities below the ordinary high water mark (OHWM).

2. **Projects or Activities Discharging to Impaired Waters**. Ecology Section 401 review is required for projects or activities authorized under NWPs if the project or activity will occur in a 303(d) listed segment of a waterbody or upstream of a listed segment and may result in further exceedances of the specific listed parameter. To determine if your project or activity is in a 303(d) listed segment of a waterbody, visit Ecology's Water Quality Assessment webpage for maps and search tools.

3. **Application**. For projects or activities that will require Ecology Section 401 review, applicants must provide Ecology with a Joint Aquatic Resources Permit Application (JARPA) along with the documentation provided to the Corps, as described in National General Condition 32, Pre-Construction Notification, including, when applicable: (a) A description of the project, including site plans, project purpose, direct and indirect adverse environmental effects the project would cause, best management practices (BMPs), and any other Department of the Army or federal agency permits used or intended to be used to authorize any part of the proposed project or any related activity. (b) Drawings indicating the Ordinary High Water Mark (OHWM), delineation of special aquatic sites and other waters of the state. Wetland delineations must be prepared in accordance with the current method required by the Corps and shall include Ecology's Wetland Rating form. Wetland rating forms are subject to review and verification by Ecology staff. Guidance for determining the OHWM is available on Ecology's website. (c) A statement describing how the mitigation requirement will be satisfied. A conceptual or detailed mitigation or restoration plan may be submitted. See State General Condition 5 for details on mitigation requirements. (d) Other applicable requirements of Corps Nationwide Permit General Condition 32, Corps Regional Conditions, or notification conditions of the applicable NWP. (e) Within 180 calendar days from receipt of applicable documents noted above **and** a copy of the final authorization letter from the Corps providing coverage for a proposed project or activity under the NWP Program Ecology will provide the applicant notice of whether an individual Section 401 will be required for the project. If

Ecology fails to act within a year after receipt of **both** of these documents, Section 401 is presumed waived.

4. **Aquatic resources requiring special protection**. Certain aquatic resources are unique, difficult-to-replace components of the aquatic environment in Washington State. Activities that would affect these resources must be avoided to the greatest extent possible. Compensating for adverse impacts to high value aquatic resources is typically difficult, prohibitively expensive, and may not be possible in some landscape settings. Ecology Section 401 review is required for activities in or affecting the following aquatic resources (and not prohibited by Seattle District Regional General Condition): (a) Wetlands with special characteristics (as defined in the Washington State Wetland Rating Systems for western and eastern Washington, Ecology Publications #14-06-029 and #14-06-030):

- Estuarine wetlands.
- Wetlands of High Conservation Value.
- Bogs.
- Old-growth and mature forested wetlands.
- Wetlands in coastal lagoons.
- Interdunal wetlands.
- Vernal pools.
- Alkali wetlands.

(b) Fens, aspen-dominated wetlands, camas prairie wetlands. (c) Marine water with eelgrass (*Zostera marina*) beds (except for NWP 48). (d) Category I wetlands. (e) Category II wetlands with a habitat score ≥ 8 points. This State General Condition does not apply to the following Nationwide Permits:
NWP 20 – *Response Operations for Oil and Hazardous Substances*, NWP 32 – *Completed Enforcement Actions*

5. Mitigation. Applicants are required to show that they have followed the mitigation sequence and have first avoided and minimized impacts to aquatic resources wherever practicable. For projects requiring Ecology Section 401 review with unavoidable impacts to aquatics resources, adequate compensatory mitigation must be provided.

(a) Wetland mitigation plans submitted for Ecology review and approval shall be based on the most current guidance provided in Wetland Mitigation in Washington State, Parts 1 and 2 (available on Ecology's website) and shall, at a minimum, include the following:

i. A description of the measures taken to avoid and minimize impacts to wetlands and other waters of the U.S.
ii. The nature of the proposed impacts (i.e., acreage of wetlands and functions lost or degraded).
iii. The rationale for the mitigation site that was selected.
iv. The goals and objectives of the compensatory mitigation project.
v. How the mitigation project will be accomplished, including construction sequencing, best management practices to protect water quality, proposed performance standards for measuring success and the proposed buffer widths.
vi. How it will be maintained and monitored to assess progress towards goals and objectives. Monitoring will generally be required for a minimum of five years. For forested and scrub-shrub wetlands, 10 years of monitoring will often be necessary.
vii. How the compensatory mitigation site will be legally protected for the long term.

Refer to Wetland Mitigation in Washington State – Part 2: Developing Mitigation Plans (Ecology Publication #06-06-011b) and Selecting Wetland Mitigation Sites Using a Watershed Approach (Ecology Publications #09-06-032 (Western Washington) and #10-06-007 (Eastern Washington)) for guidance on selecting suitable mitigation sites and developing mitigation plans. Ecology encourages the use of alternative mitigation approaches, including credit/debit methodology, advance mitigation, and other programmatic approach such as mitigation banks and in-lieu fee programs. If you are interested in proposing use of an alternative mitigation approach, consult with the appropriate Ecology regional staff person. Information on alternative mitigation approaches is available on Ecology's website.

(b) Mitigation for other aquatic resource impacts will be determined on a case-by-case basis.

6. Temporary Fills. Ecology Section 401 review is required for any project or activity with temporary fill in wetlands or other waters of the state for more than 90 days, unless the applicant has received written approval from Ecology. Note: This State General Condition does not apply to projects or activities authorized under NWP 33, *Temporary Construction, Access, and Dewatering*

7. Stormwater pollution prevention: All projects that involve land disturbance or impervious surfaces must implement stormwater pollution prevention or control measures to avoid discharge of pollutants in stormwater runoff to waters of the State.

(a) For land disturbances during construction, the applicant must obtain and implement permits (e.g., Construction Stormwater General Permit) where required and follow Ecology's current stormwater manual.

(b) Following construction, prevention or treatment of on-going stormwater runoff from impervious surfaces shall be provided.

Ecology's Stormwater Management and Design Manuals and stormwater permit information are available on Ecology's website.

8. State Section 401 Review for PCNs not receiving 45-day response from the Seattle District. In the event the Seattle District Corps does not issue a NWP authorization letter within 45 calendar days of receipt of a **complete** pre-construction notification, the applicant must contact Ecology for Section 401 review prior to commencing work.

F. ECOLOGY 401 CERTIFICATION: SPECIFIC CONDITIONS FOR THIS NWP:

Certified subject to conditions. Ecology Section 401 review is required for projects or activities authorized under this NWP if:

1. The project or activity involves fill in tidal waters.

2. The project or activity affects ½ acre or more of wetlands.

3. The project or activity is a mitigation bank or an advanced mitigation site.

The project or activity is in or adjoining a known contaminated or cleanup site.

G. COASTAL ZONE MANAGEMENT CONSISTENCY RESPONSE FOR THIS NWP:
(Note: This is only applies in the following counties: Clallam, Grays Harbor, Island, Jefferson, King, Kitsap, Mason, Pacific, Pierce, San Juan, Skagit, Snohomish, Thurston, Wahkiakum and Whatcom)

Response: Ecology concurs that this NWP is consistent with the CZMP, subject to the following condition: An individual Coastal Zone Management Consistency Determination is required for project or activities under this NWP if State Section 401 review is required.

General Conditions: For Non-Federal Permittees
1. Necessary Data and Information. A Coastal Zone Management Program "Certification of Consistency" form is required for projects located within a coastal county. "Certification of Consistency" forms are available on Ecology's website. The form shall include a description of the proposed project or activity and evidence of compliance with the applicable enforceable policies of the Washington Coastal Zone Management Program (CZMP). Also, a map of the site location is required.

2. Timing. Within 6 months from receipt of the necessary data and information, Ecology will provide a federal consistency determination for the proposed project or activity. If Ecology fails to act within the 6 month period, concurrence with the CZMP is presumed.

General Conditions: For Federal Permittees (Agencies)
1. Necessary Data and Information. Federal agencies shall submit the determination, information, and analysis required by 15 CFR 930.39 to obtain a federal consistency determination.
2. Timing. Within 60 days from receipt of the necessary data and information, Ecology will provide a federal consistency determination for the proposed project or activity. If Ecology fails to act within the 60 day period, concurrence with the CZMP is presumed.

FIGURE LIST	
FIGURE NUMBER	FIGURE TITLE
1	COVER SHEET
2	SHEET LAYOUT KEY PLAN
3	BOUNDARY SURVEY PLAN
4	EXISTING CONDITIONS (SOUTH)
5	EXISTING CONDITIONS (NORTH)
6	DEMOLITION PLAN - SOUTH
7	DEMOLITION PLAN - NORTH
8	GRADING PLAN - SOUTH
9	GRADING PLAN - NORTH
10	CROSS SECTIONS (1 OF 2)
11	CROSS SECTIONS (2 OF 2)
12	CONSTRUCTION MATERIALS PLAN - SOUTH
13	CONSTRUCTION MATERIALS PLAN - NORTH
14	PLANTING PLAN - SOUTH
15	PLANTING PLAN - NORTH
16	PLANTING SCHEDULE
17	PIER AND STEPS PLAN
18	STRUCTURAL SECTIONS AND DETAILS

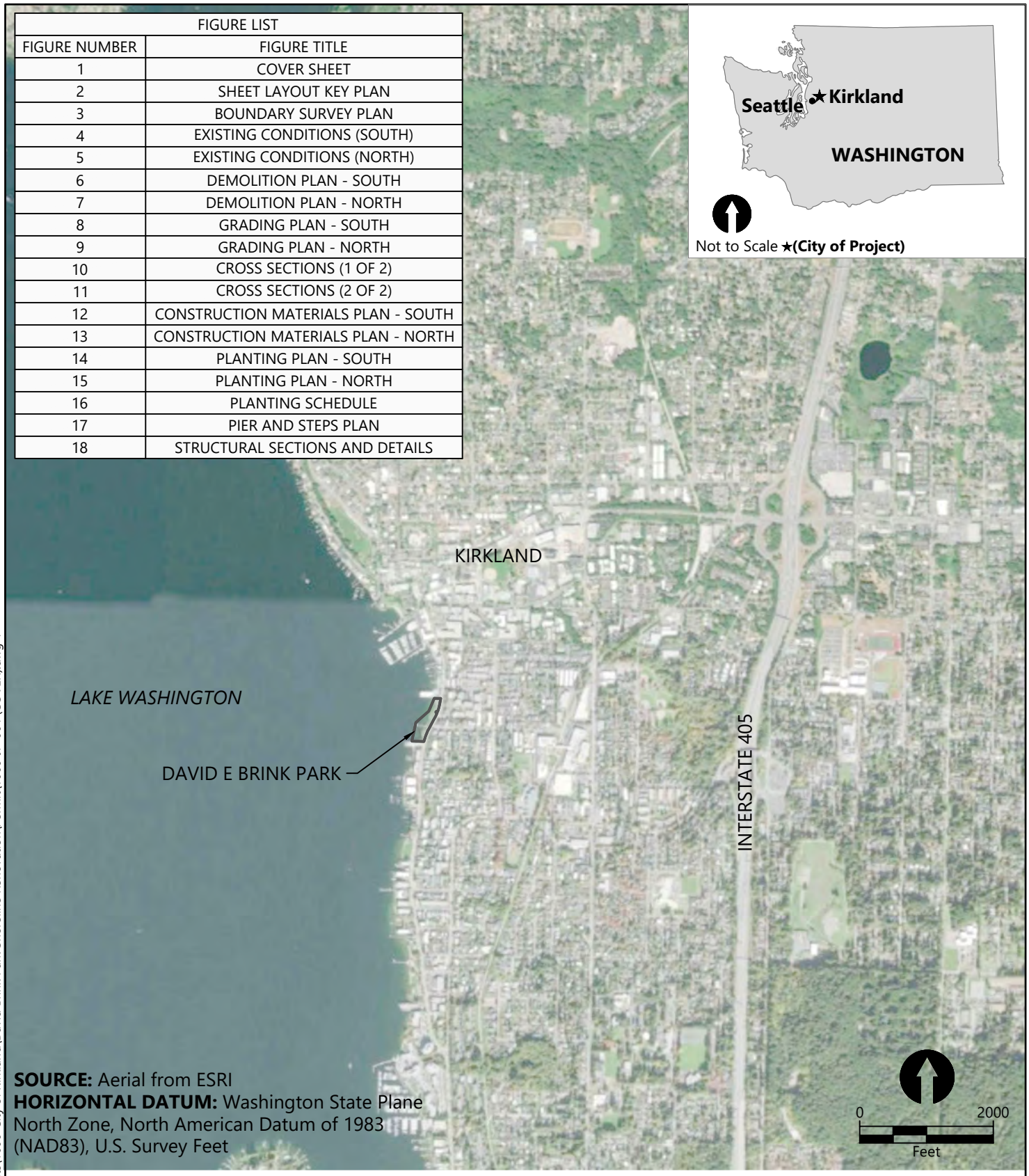

SOURCE: Aerial from ESRI
HORIZONTAL DATUM: Washington State Plane North Zone, North American Datum of 1983 (NAD83), U.S. Survey Feet

COVER SHEET

REFERENCE #: NWS-2020-347

APPLICANT: CITY OF KIRKLAND

LOCATION: 555 LAKE STREET SOUTH
KIRKLAND, WA 98033

ADJACENT PROPERTY OWNERS:
1 - LAKESIDE CONDOMINIUMS
2 - HARBOR LIGHTS CONDOMINIUMS

NAME: DAVID E. BRINK PARK SHORELINE RENOVATION PROJECT

PROPOSED: PARK INFRASTRUCTURE IMPROVEMENTS AND HABITAT ENHANCEMENT

PURPOSE: REPLACE AND REPAIR PARK SHORELINE STRUCTURES AND ENHANCE NEARSHORE HABITAT

DATUM: NAVD88
LATITUDE: 47.6708
LONGITUDE: -122.2062
S-T-R: 07 AND 08-25N-05E

ANCHOR QEA
1201 3rd Ave, Suite 2600
Seattle, WA 98101
206-287-9130

IN: KIRKLAND
NEAR/AT: LAKE WASHINGTON
COUNTY: KING
STATE: WASHINGTON

DATE: AUGUST 2020

K:\Projects\1006-City of Kirkland\David Brink Park Shoreline Renovation\Permit\1006-JP-001 (COVER).dwg 1
May 19, 2020 7:53am cwee

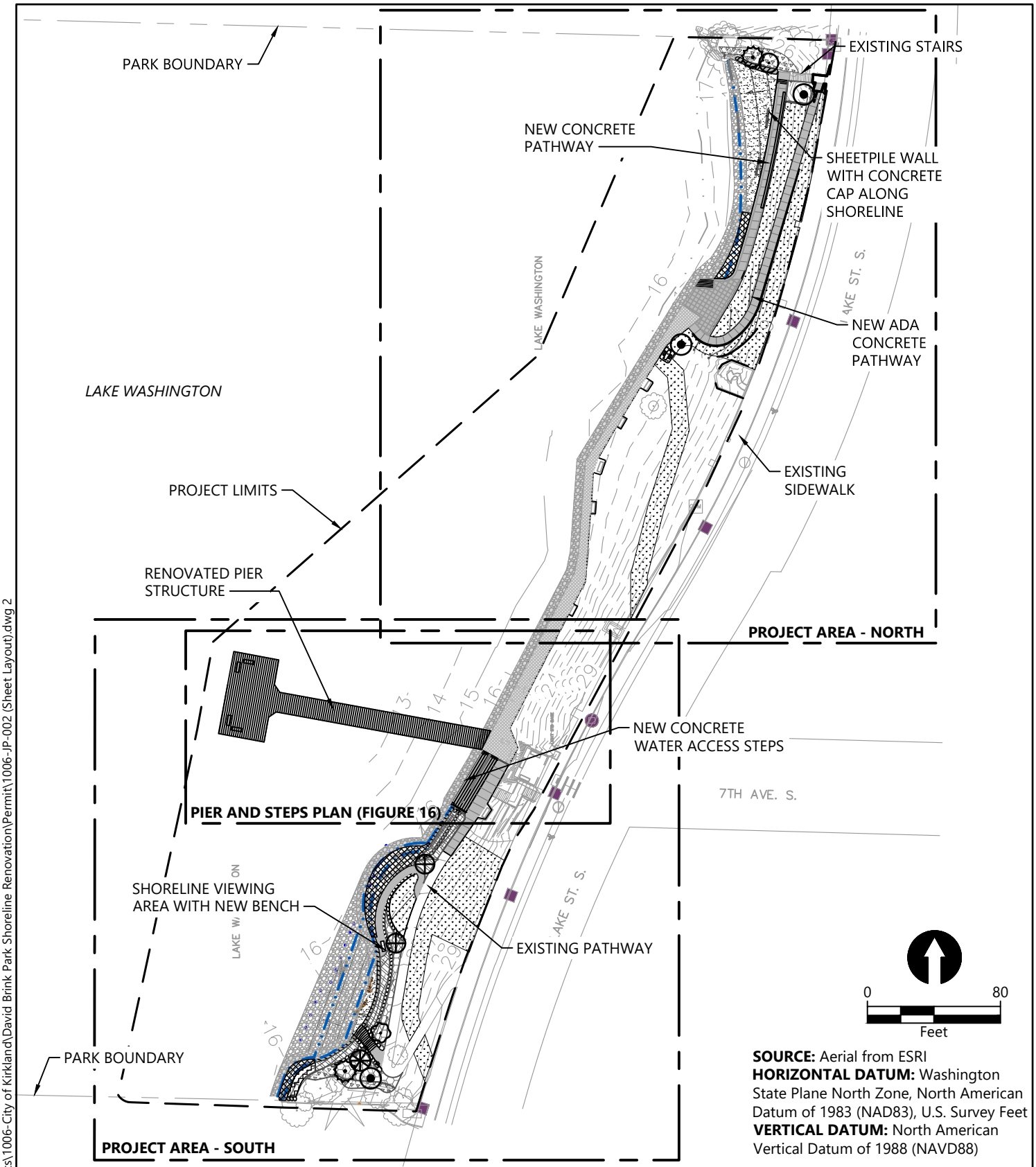

SOURCE: Aerial from ESRI
HORIZONTAL DATUM: Washington State Plane North Zone, North American Datum of 1983 (NAD83), U.S. Survey Feet
VERTICAL DATUM: North American Vertical Datum of 1988 (NAVD88)

SHEET LAYOUT KEY PLAN

REFERENCE #: NWS-2020-347

APPLICANT: CITY OF KIRKLAND

LOCATION: 555 LAKE STREET SOUTH
KIRKLAND, WA 98033

ADJACENT PROPERTY OWNERS:
1 - LAKESIDE CONDOMINIUMS
2 - HARBOR LIGHTS CONDOMINIUMS

NAME: DAVID E. BRINK PARK SHORELINE RENOVATION PROJECT

PROPOSED: PARK INFRASTRUCTURE IMPROVEMENTS AND HABITAT ENHANCEMENT

PURPOSE: REPLACE AND REPAIR PARK SHORELINE STRUCTURES AND ENHANCE NEARSHORE HABITAT

DATUM: NAVD88
LATITUDE: 47.6708
LONGITUDE: -122.2062
S-T-R: 07 AND 08-25N-05E

IN: KIRKLAND
NEAR/AT: LAKE WASHINGTON
COUNTY: KING
STATE: WASHINGTON

DATE: AUGUST 2020

ANCHOR QEA
1201 3rd Ave, Suite 2600
Seattle, WA 98101
206-287-9130

K:\Projects\1006-City of Kirkland\David Brink Park Shoreline Renovation\Permit\1006-JP-002 (Sheet Layout).dwg 2
May 19, 2020 7:54am cwee

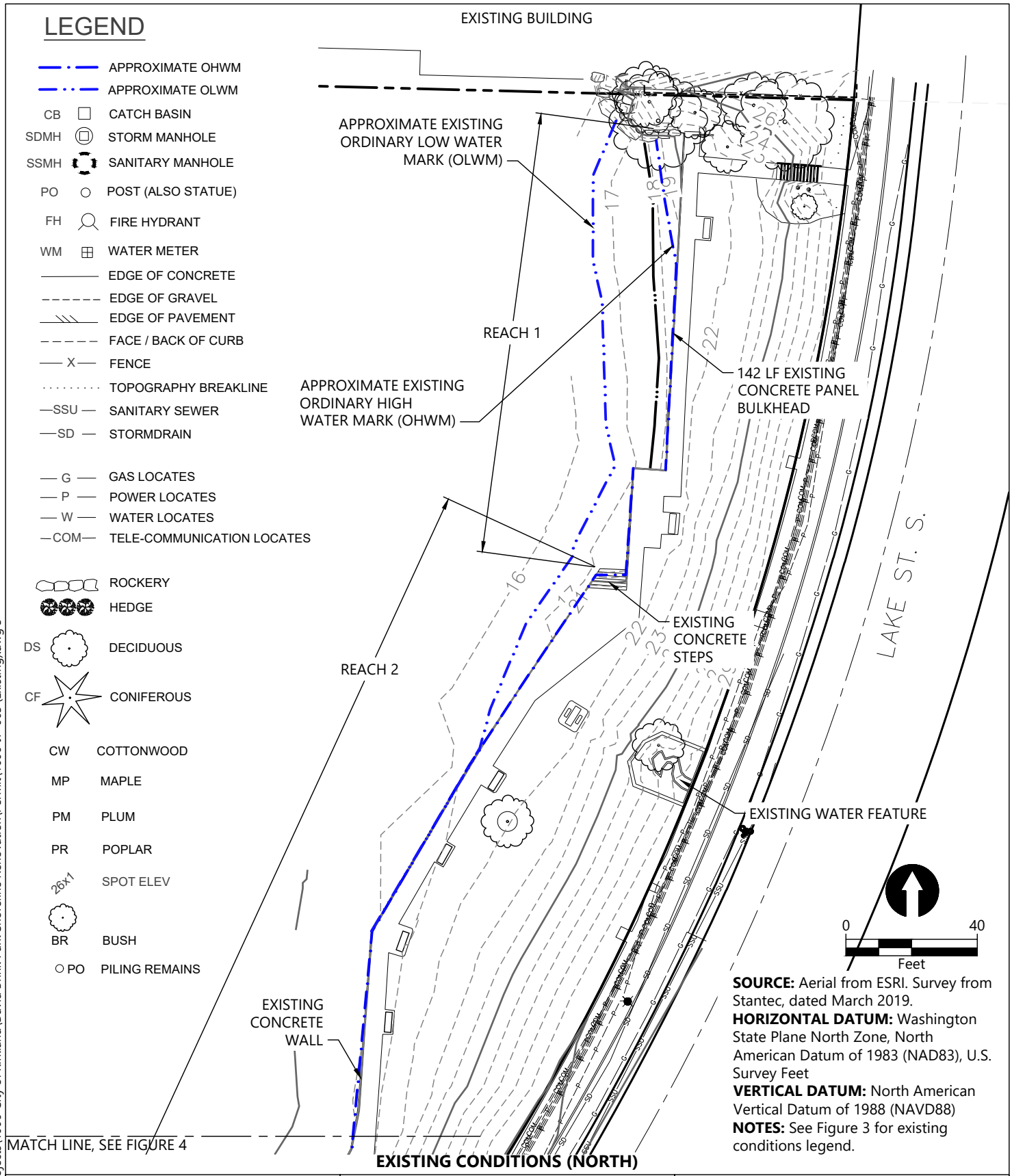

SOURCE: Aerial from ESRI. Survey from Stantec, dated March 2019.
HORIZONTAL DATUM: Washington State Plane North Zone, North American Datum of 1983 (NAD83), U.S. Survey Feet
VERTICAL DATUM: North American Vertical Datum of 1988 (NAVD88)
NOTES: See Figure 3 for existing conditions legend.

EXISTING CONDITIONS (NORTH)

REFERENCE #: NWS-2020-347

APPLICANT: CITY OF KIRKLAND

LOCATION: 555 LAKE STREET SOUTH
KIRKLAND, WA 98033

ADJACENT PROPERTY OWNERS:
1 - LAKESIDE CONDOMINIUMS
2 - HARBOR LIGHTS CONDOMINIUMS

NAME: DAVID E. BRINK PARK SHORELINE RENOVATION PROJECT

PROPOSED: PARK INFRASTRUCTURE IMPROVEMENTS AND HABITAT ENHANCEMENT

PURPOSE: REPLACE AND REPAIR PARK SHORELINE STRUCTURES AND ENHANCE NEARSHORE HABITAT

DATUM: NAVD88
LATITUDE: 47.6708
LONGITUDE: -122.2062
S-T-R: 07 AND 08-25N-05E

IN: KIRKLAND
NEAR/AT: LAKE WASHINGTON
COUNTY: KING
STATE: WASHINGTON

DATE: AUGUST 2020

ANCHOR QEA
1201 3rd Ave, Suite 2600
Seattle, WA 98101
206-287-9130

K:\Projects\1006-City of Kirkland\David Brink Park Shoreline Renovation\Permit\1006-JP-003 (Existing).dwg 3
May 19, 2020 7:54am cwee

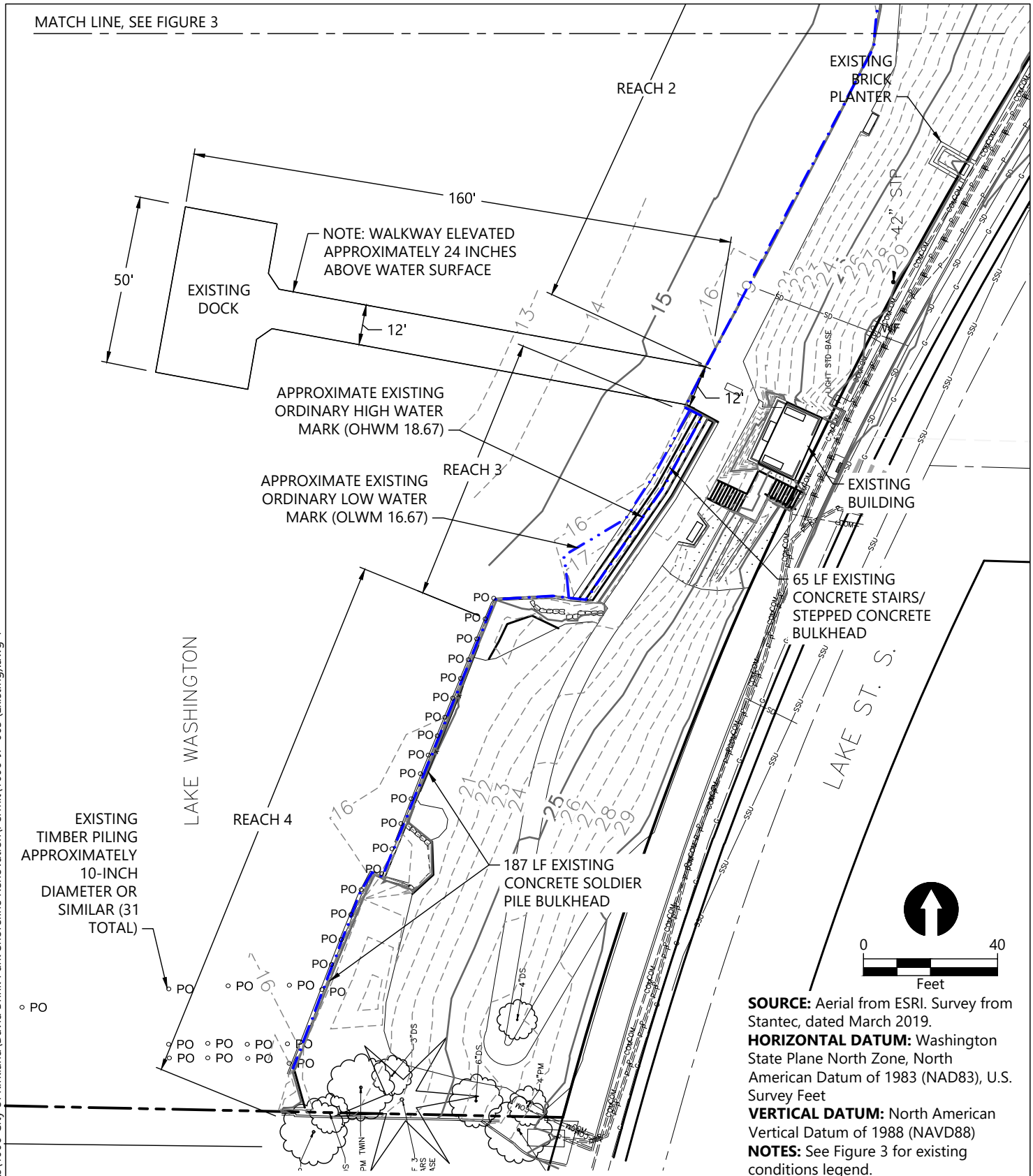

SOURCE: Aerial from ESRI. Survey from Stantec, dated March 2019.
HORIZONTAL DATUM: Washington State Plane North Zone, North American Datum of 1983 (NAD83), U.S. Survey Feet
VERTICAL DATUM: North American Vertical Datum of 1988 (NAVD88)
NOTES: See Figure 3 for existing conditions legend.

EXISTING CONDITIONS (SOUTH)

REFERENCE #: NWS-2020-347

APPLICANT: CITY OF KIRKLAND

LOCATION: 555 LAKE STREET SOUTH
KIRKLAND, WA 98033

ADJACENT PROPERTY OWNERS:
1 - LAKESIDE CONDOMINIUMS
2 - HARBOR LIGHTS CONDOMINIUMS

NAME: DAVID E. BRINK PARK SHORELINE RENOVATION PROJECT

PROPOSED: PARK INFRASTRUCTURE IMPROVEMENTS AND HABITAT ENHANCEMENT

PURPOSE: REPLACE AND REPAIR PARK SHORELINE STRUCTURES AND ENHANCE NEARSHORE HABITAT

DATUM: NAVD88
LATITUDE: 47.6708
LONGITUDE: -122.2062
S-T-R: 07 AND 08-25N-05E

IN: KIRKLAND
NEAR/AT: LAKE WASHINGTON
COUNTY: KING
STATE: WASHINGTON

DATE: AUGUST 2020

ANCHOR QEA
1201 3rd Ave, Suite 2600
Seattle, WA 98101
206-287-9130

K:\Projects\1006-City of Kirkland\David Brink Park Shoreline Renovation\Permit\1006-JP-003 (Existing).dwg 4
May 19, 2020 7:54am cwee

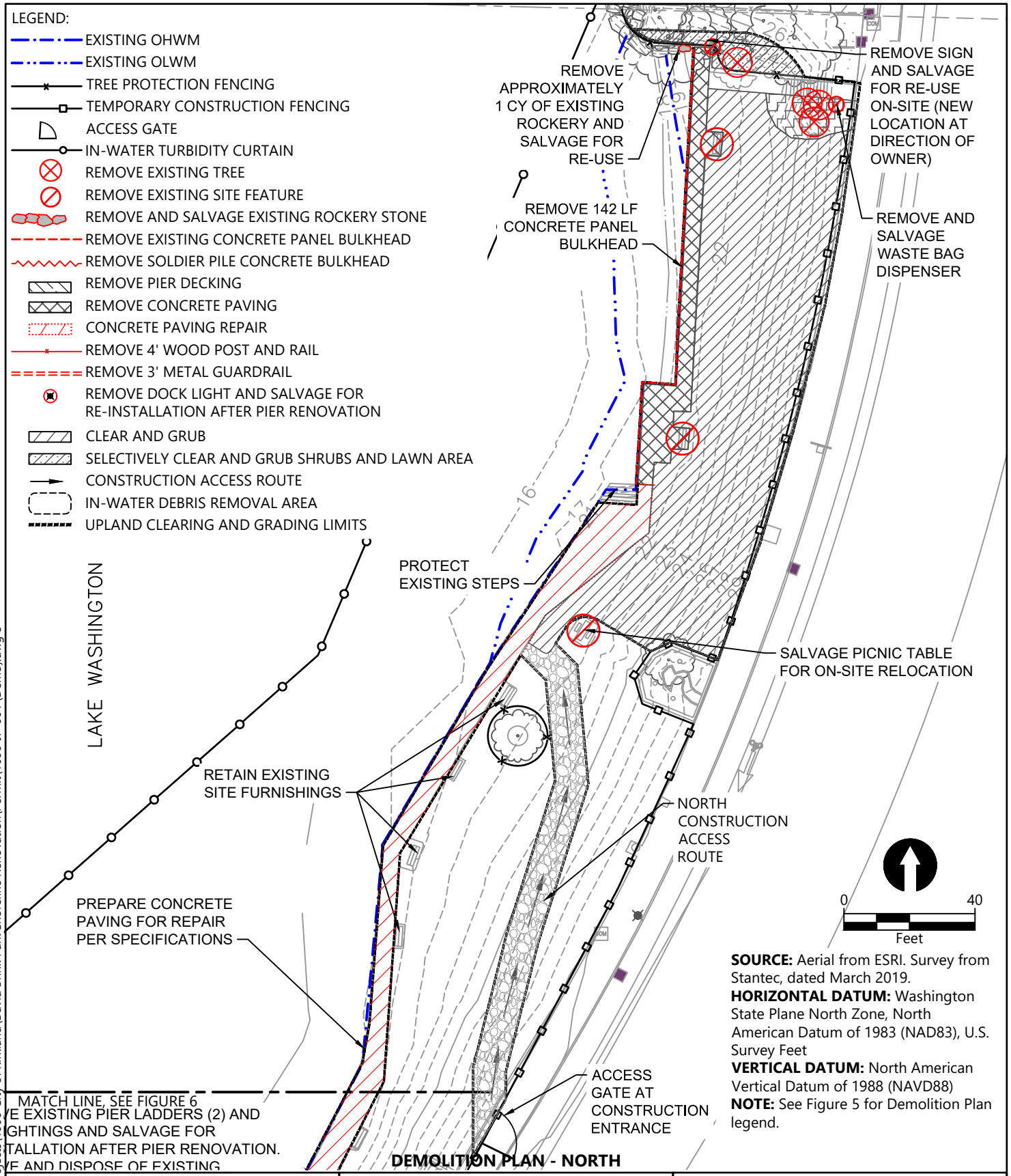

SOURCE: Aerial from ESRI. Survey from Stantec, dated March 2019.
HORIZONTAL DATUM: Washington State Plane North Zone, North American Datum of 1983 (NAD83), U.S. Survey Feet
VERTICAL DATUM: North American Vertical Datum of 1988 (NAVD88)
NOTE: See Figure 5 for Demolition Plan legend.

REFERENCE #: NWS-2020-347

APPLICANT: CITY OF KIRKLAND

LOCATION: 555 LAKE STREET SOUTH
KIRKLAND, WA 98033

ADJACENT PROPERTY OWNERS:
1 - LAKESIDE CONDOMINIUMS
2 - HARBOR LIGHTS CONDOMINIUMS

NAME: DAVID E. BRINK PARK SHORELINE RENOVATION PROJECT

PROPOSED: PARK INFRASTRUCTURE IMPROVEMENTS AND HABITAT ENHANCEMENT

PURPOSE: REPLACE AND REPAIR PARK SHORELINE STRUCTURES AND ENHANCE NEARSHORE HABITAT

DATUM: NAVD88
LATITUDE: 47.6708
LONGITUDE: -122.2062
S-T-R: 07 AND 08-25N-05E

IN: KIRKLAND
NEAR/AT: LAKE WASHINGTON
COUNTY: KING
STATE: WASHINGTON

DATE: AUGUST 2020

ANCHOR QEA
1201 3rd Ave, Suite 2600
Seattle, WA 98101
206-287-9130

K:\Projects\1006-City of Kirkland\David Brink Park Shoreline Renovation\Permit\1006-JP-004 (Demo).dwg 5
May 19, 2020 7:54am cwee

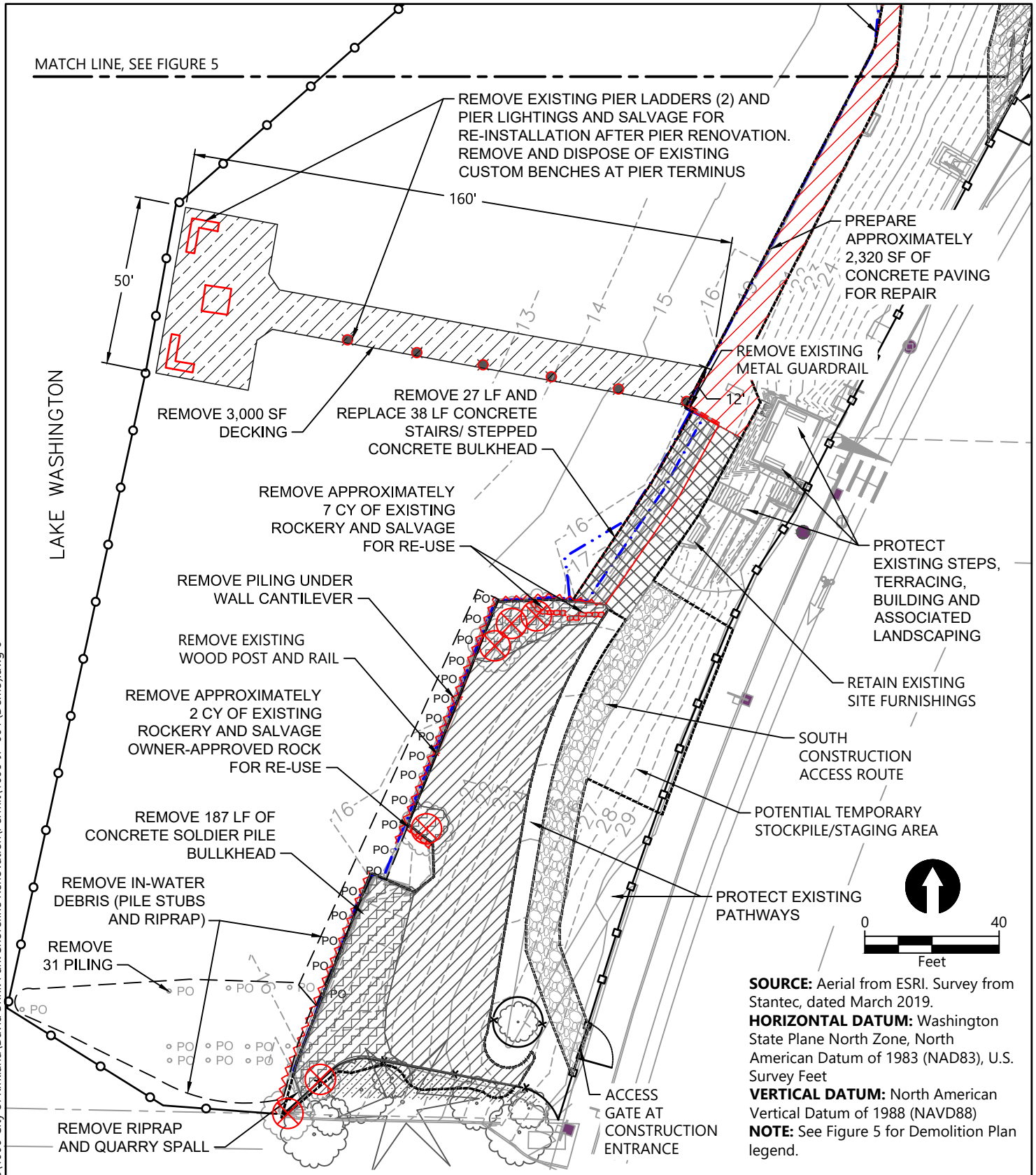

SOURCE: Aerial from ESRI. Survey from Stantec, dated March 2019.
HORIZONTAL DATUM: Washington State Plane North Zone, North American Datum of 1983 (NAD83), U.S. Survey Feet
VERTICAL DATUM: North American Vertical Datum of 1988 (NAVD88)
NOTE: See Figure 5 for Demolition Plan legend.

DEMOLITION PLAN - SOUTH

REFERENCE #: NWS-2020-347

APPLICANT: CITY OF KIRKLAND

LOCATION: 555 LAKE STREET SOUTH
KIRKLAND, WA 98033

ADJACENT PROPERTY OWNERS:
1 - LAKESIDE CONDOMINIUMS
2 - HARBOR LIGHTS CONDOMINIUMS

NAME: DAVID E. BRINK PARK SHORELINE RENOVATION PROJECT

PROPOSED: PARK INFRASTRUCTURE IMPROVEMENTS AND HABITAT ENHANCEMENT

PURPOSE: REPLACE AND REPAIR PARK SHORELINE STRUCTURES AND ENHANCE NEARSHORE HABITAT

DATUM: NAVD88
LATITUDE: 47.6708
LONGITUDE: -122.2062
S-T-R: 07 AND 08-25N-05E

IN: KIRKLAND
NEAR/AT: LAKE WASHINGTON
COUNTY: KING
STATE: WASHINGTON

DATE: AUGUST 2020

ANCHOR QEA
1201 3rd Ave, Suite 2600
Seattle, WA 98101
206-287-9130

K:\Projects\1006-City of Kirkland\David Brink Park Shoreline Renovation\Permit\1006-JP-004 (Demo).dwg 6
May 19, 2020 7:54am cwee

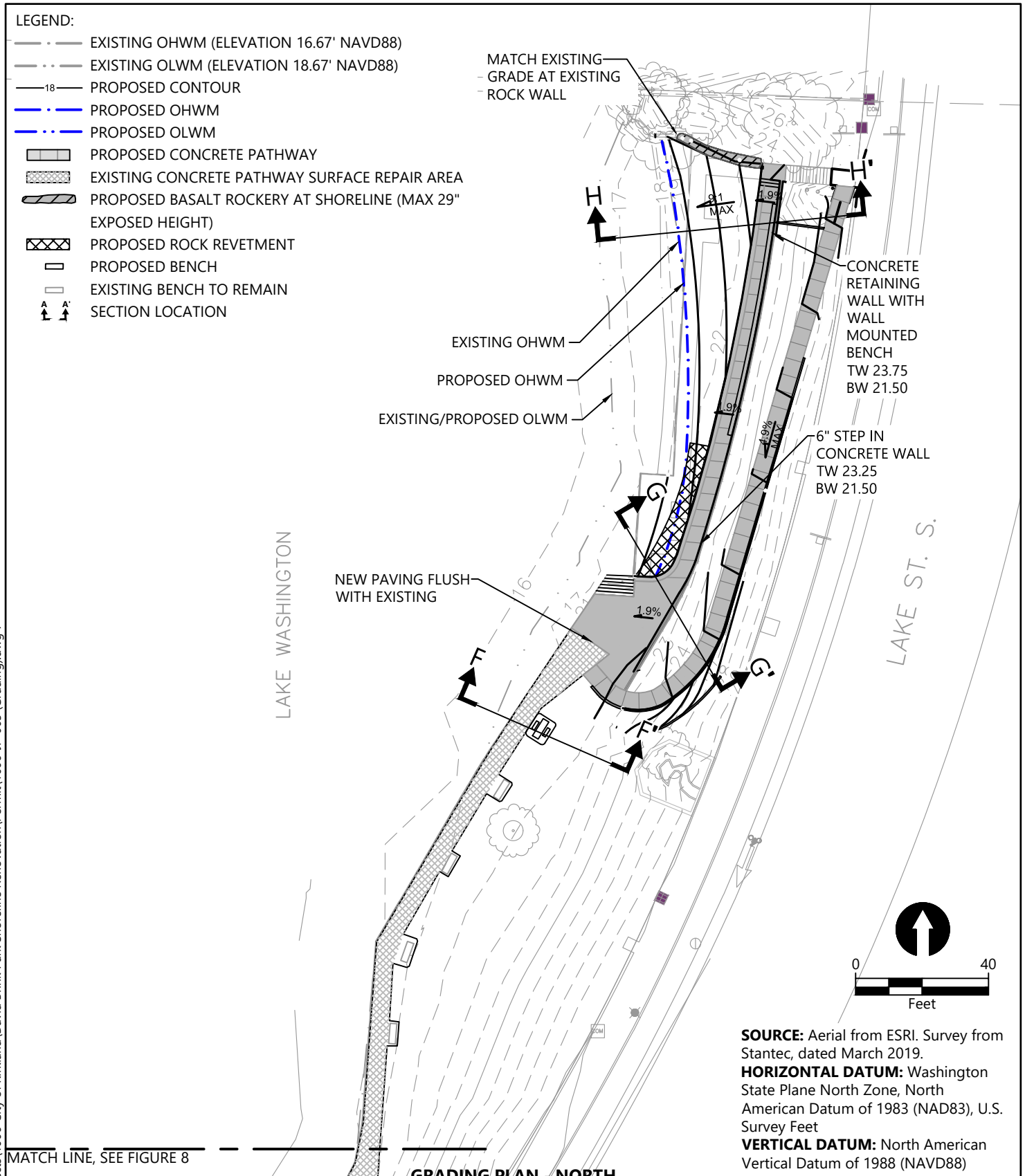

SOURCE: Aerial from ESRI. Survey from Stantec, dated March 2019.
HORIZONTAL DATUM: Washington State Plane North Zone, North American Datum of 1983 (NAD83), U.S. Survey Feet
VERTICAL DATUM: North American Vertical Datum of 1988 (NAVD88)

GRADING PLAN - NORTH

REFERENCE #: NWS-2020-347

APPLICANT: CITY OF KIRKLAND

LOCATION: 555 LAKE STREET SOUTH
KIRKLAND, WA 98033

ADJACENT PROPERTY OWNERS:
1 - LAKESIDE CONDOMINIUMS
2 - HARBOR LIGHTS CONDOMINIUMS

NAME: DAVID E. BRINK PARK SHORELINE RENOVATION PROJECT

PROPOSED: PARK INFRASTRUCTURE IMPROVEMENTS AND HABITAT ENHANCEMENT

PURPOSE: REPLACE AND REPAIR PARK SHORELINE STRUCTURES AND ENHANCE NEARSHORE HABITAT

DATUM: NAVD88
LATITUDE: 47.6708
LONGITUDE: -122.2062
S-T-R: 07 AND 08-25N-05E

IN: KIRKLAND
NEAR/AT: LAKE WASHINGTON
COUNTY: KING
STATE: WASHINGTON

DATE: AUGUST 2020

ANCHOR QEA
1201 3rd Ave, Suite 2600
Seattle, WA 98101
206-287-9130

K:\Projects\1006-City of Kirkland\David Brink Park Shoreline Renovation\Permit\1006-JP-005 (Grading).dwg 7
May 19, 2020 7:54am cwee

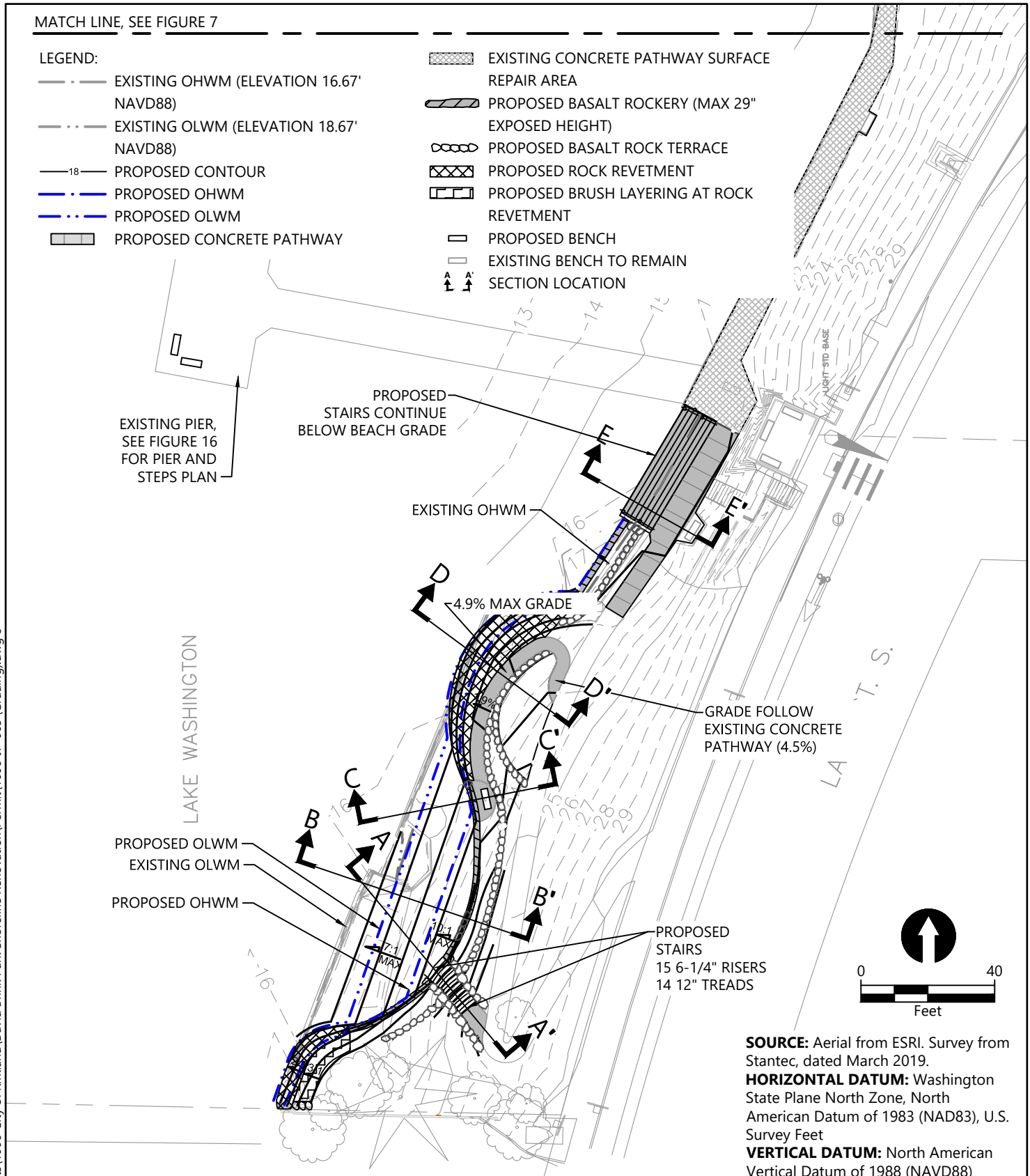

SOURCE: Aerial from ESRI. Survey from Stantec, dated March 2019.
HORIZONTAL DATUM: Washington State Plane North Zone, North American Datum of 1983 (NAD83), U.S. Survey Feet
VERTICAL DATUM: North American Vertical Datum of 1988 (NAVD88)

GRADING PLAN - SOUTH

REFERENCE #: NWS-2020-347

APPLICANT: CITY OF KIRKLAND

LOCATION: 555 LAKE STREET SOUTH
KIRKLAND, WA 98033

ADJACENT PROPERTY OWNERS:
1 - LAKESIDE CONDOMINIUMS
2 - HARBOR LIGHTS CONDOMINIUMS

NAME: DAVID E. BRINK PARK SHORELINE RENOVATION PROJECT

PROPOSED: PARK INFRASTRUCTURE IMPROVEMENTS AND HABITAT ENHANCEMENT

PURPOSE: REPLACE AND REPAIR PARK SHORELINE STRUCTURES AND ENHANCE NEARSHORE HABITAT

DATUM: NAVD88
LATITUDE: 47.6708
LONGITUDE: -122.2062
S-T-R: 07 AND 08-25N-05E

IN: KIRKLAND
NEAR/AT: LAKE WASHINGTON
COUNTY: KING
STATE: WASHINGTON

DATE: AUGUST 2020

ANCHOR QEA
1201 3rd Ave, Suite 2600
Seattle, WA 98101
206-287-9130

K:\Projects\1006-City of Kirkland\David Brink Park Shoreline Renovation\Permit\1006-JP-005 (Grading).dwg 8
May 19, 2020 7:55am cwee

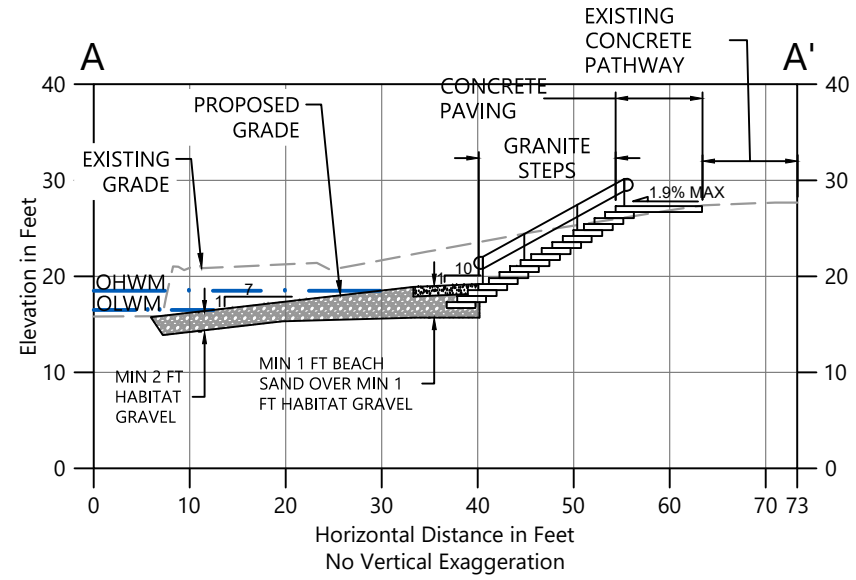

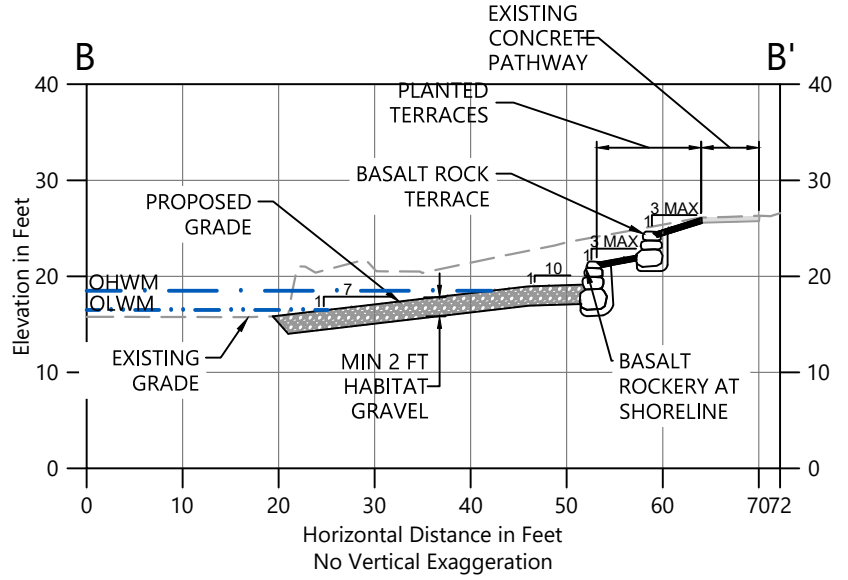

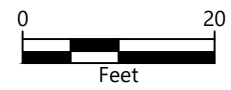

SOURCE: Survey from Stantec, dated March 2019.
VERTICAL DATUM: North American Vertical Datum of 1988 (NAVD88)

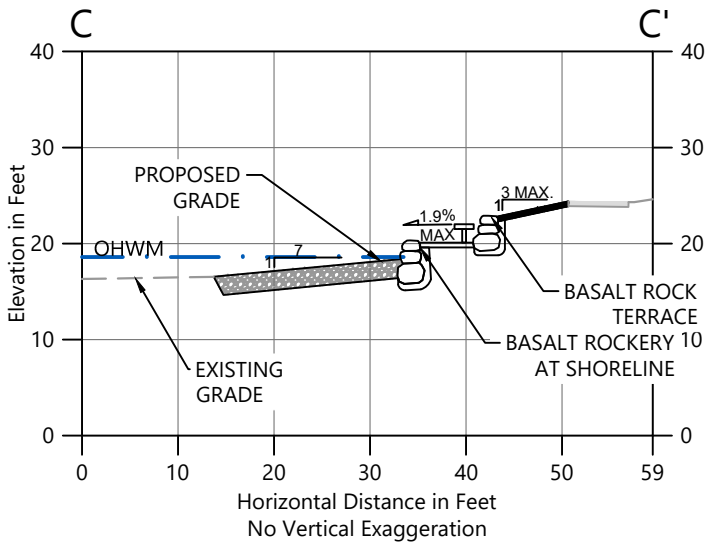

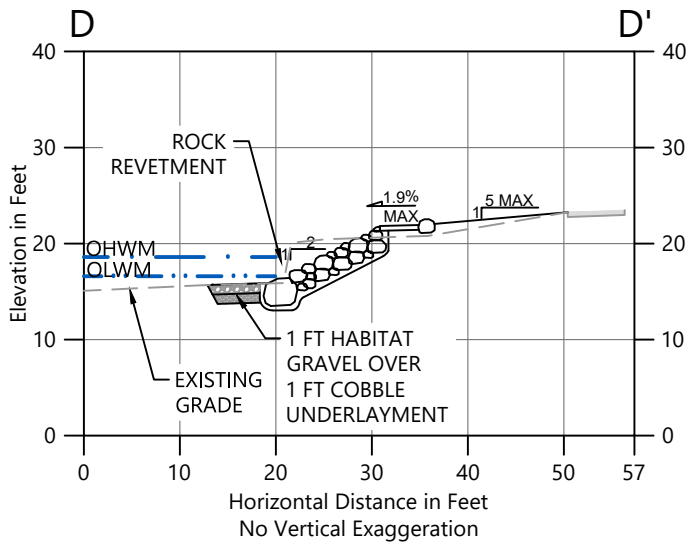

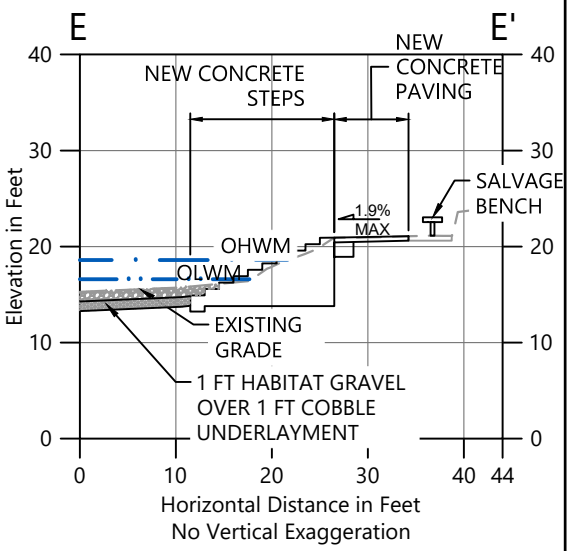

CROSS SECTIONS (1 OF 2)

REFERENCE #: NWS-2020-347

APPLICANT: CITY OF KIRKLAND

LOCATION: 555 LAKE STREET SOUTH
KIRKLAND, WA 98033

ADJACENT PROPERTY OWNERS:
1 - LAKESIDE CONDOMINIUMS
2 - HARBOR LIGHTS CONDOMINIUMS

NAME: DAVID E. BRINK PARK SHORELINE RENOVATION PROJECT

PROPOSED: PARK INFRASTRUCTURE IMPROVEMENTS AND HABITAT ENHANCEMENT

PURPOSE: REPLACE AND REPAIR PARK SHORELINE STRUCTURES AND ENHANCE NEARSHORE HABITAT

DATUM: NAVD88
LATITUDE: 47.6708
LONGITUDE: -122.2062
S-T-R: 07 AND 08-25N-05E

IN: KIRKLAND
NEAR/AT: LAKE WASHINGTON
COUNTY: KING
STATE: WASHINGTON

DATE: AUGUST 2020

ANCHOR QEA
1201 3rd Ave, Suite 2600
Seattle, WA 98101
206-287-9130

K:\Projects\1006-City of Kirkland\David Brink Park Shoreline Renovation\Permit\1006-JP-008 (Grading XS).dwg 9
May 19, 2020 7:55am cwee

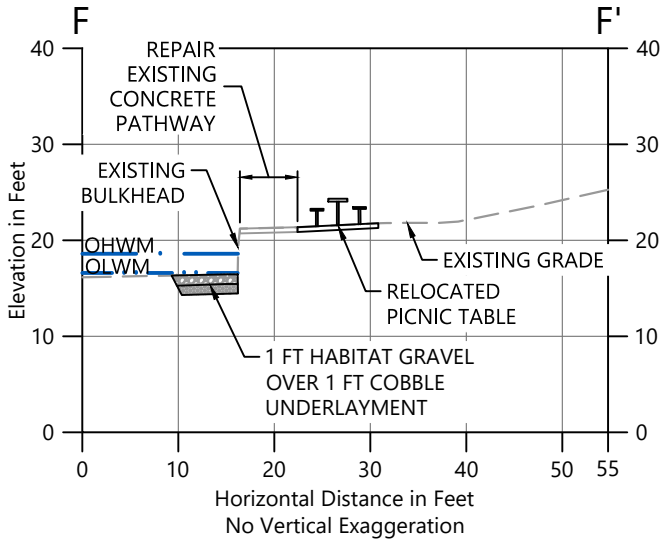

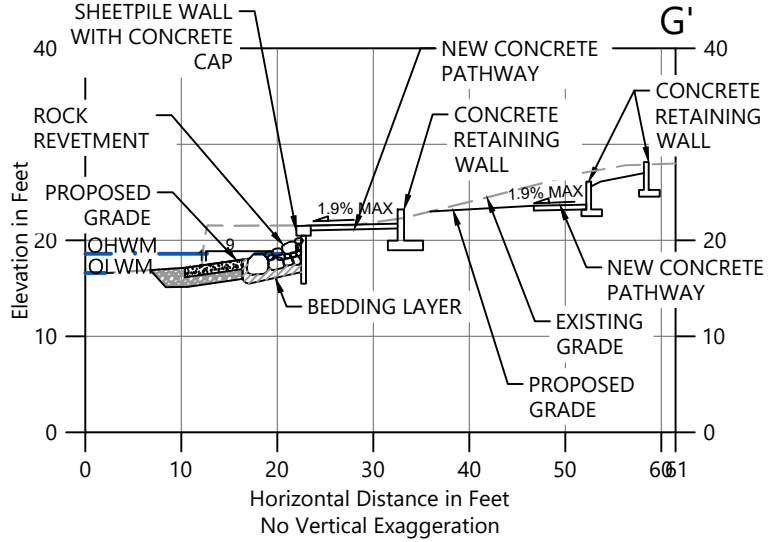

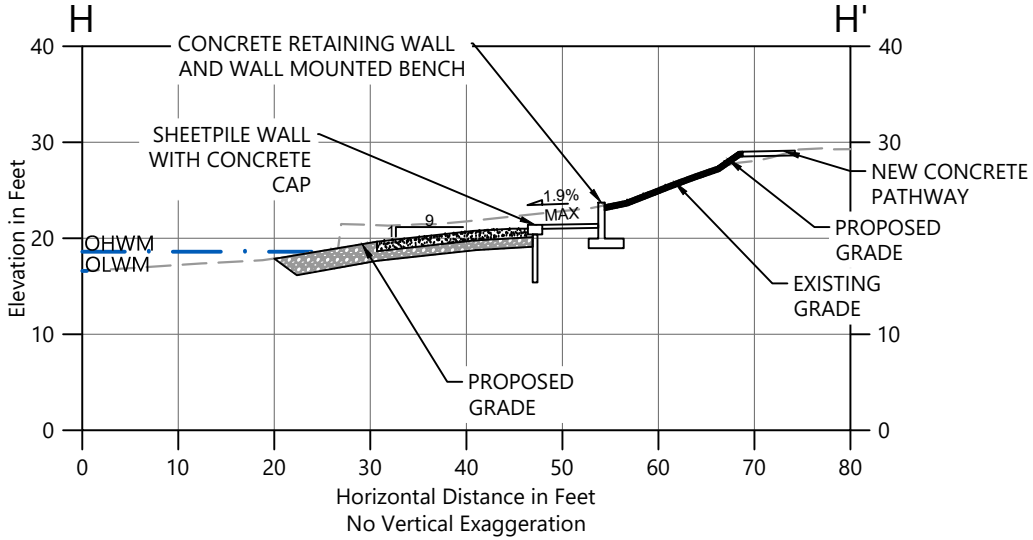

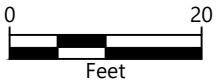

SOURCE: Survey from Stantec, dated March 2019.
VERTICAL DATUM: North American Vertical Datum of 1988 (NAVD88)

CROSS SECTIONS (2 OF 2)

REFERENCE #: NWS-2020-347

APPLICANT: CITY OF KIRKLAND

LOCATION: 555 LAKE STREET SOUTH
KIRKLAND, WA 98033

ADJACENT PROPERTY OWNERS:
1 - LAKESIDE CONDOMINIUMS
2 - HARBOR LIGHTS CONDOMINIUMS

NAME: DAVID E. BRINK PARK SHORELINE RENOVATION PROJECT

PROPOSED: PARK INFRASTRUCTURE IMPROVEMENTS AND HABITAT ENHANCEMENT

PURPOSE: REPLACE AND REPAIR PARK SHORELINE STRUCTURES AND ENHANCE NEARSHORE HABITAT

DATUM: NAVD88
LATITUDE: 47.6708
LONGITUDE: -122.2062
S-T-R: 07 AND 08-25N-05E

IN: KIRKLAND
NEAR/AT: LAKE WASHINGTON
COUNTY: KING
STATE: WASHINGTON

DATE: AUGUST 2020

ANCHOR QEA
1201 3rd Ave, Suite 2600
Seattle, WA 98101
206-287-9130

K:\Projects\1006-City of Kirkland\David Brink Park Shoreline Renovation\Permit\1006-JP-008 (Grading XS).dwg 10
May 19, 2020 7:55am cwee

LEGEND:

- EXISTING OHWM
- PROPOSED OHWM
- 18 PROPOSED CONTOUR
- PROPOSED OHWM
- PROPOSED OLWM
- PROPOSED CONCRETE PATHWAY
- PROPOSED CONCRETE PATHWAY WITH DECORATIVE PAVING
- EXISTING CONCRETE PATHWAY SURFACE REPAIR AREA
- PIER GRATING
- BEACH SAND
- HABITAT GRAVEL
- COBBLE UNDERLAYMENT
- BASALT ROCKERY AT SHORELINE (29" MAX EXPOSED HEIGHT)
- ROCK REVETMENT (2:1 MAX SLOPE)
- PROPOSED BENCH
- EXISTING BENCH TO REMAIN
- EXISTING PICNIC TABLE SALVAGED AND RELOCATED ON-SITE
- DRIFTWOOD WITH ROOTWADS
- TOPSOIL (6" DEPTH)
- HANDRAIL
- GUARDRAIL

Project Component(s)	Work Below OHWM	**Work Above OHWM**
Vinyl sheetpile wall with concrete cap installation	N/A	12 CY
Rock revetment installation	5 CY	67 CY
Shoreline cobble underlayment	125 CY	N/A
Shoreline habitat gravel installation	125 CY	N/A
Concrete water access stair replacement	50 CY	6 CY
Rockery installation at shoreline	11 CY	18 CY
Rock terrace installation	N/A	43 CY
Pocket beach installation: habitat gravel	186 CY	15 CY
Pocket beach installation: beach sand	N/A	50 CY
Upland ornamental planting	N/A	620 SF
Rock terrace	N/A	43 CY
Concrete repair	N/A	2,320 SF
New ADA-compliant concrete pathway	N/A	953 SF
New pathway spur at south beach	N/A	275 SF
New concrete retaining walls	N/A	324 SF

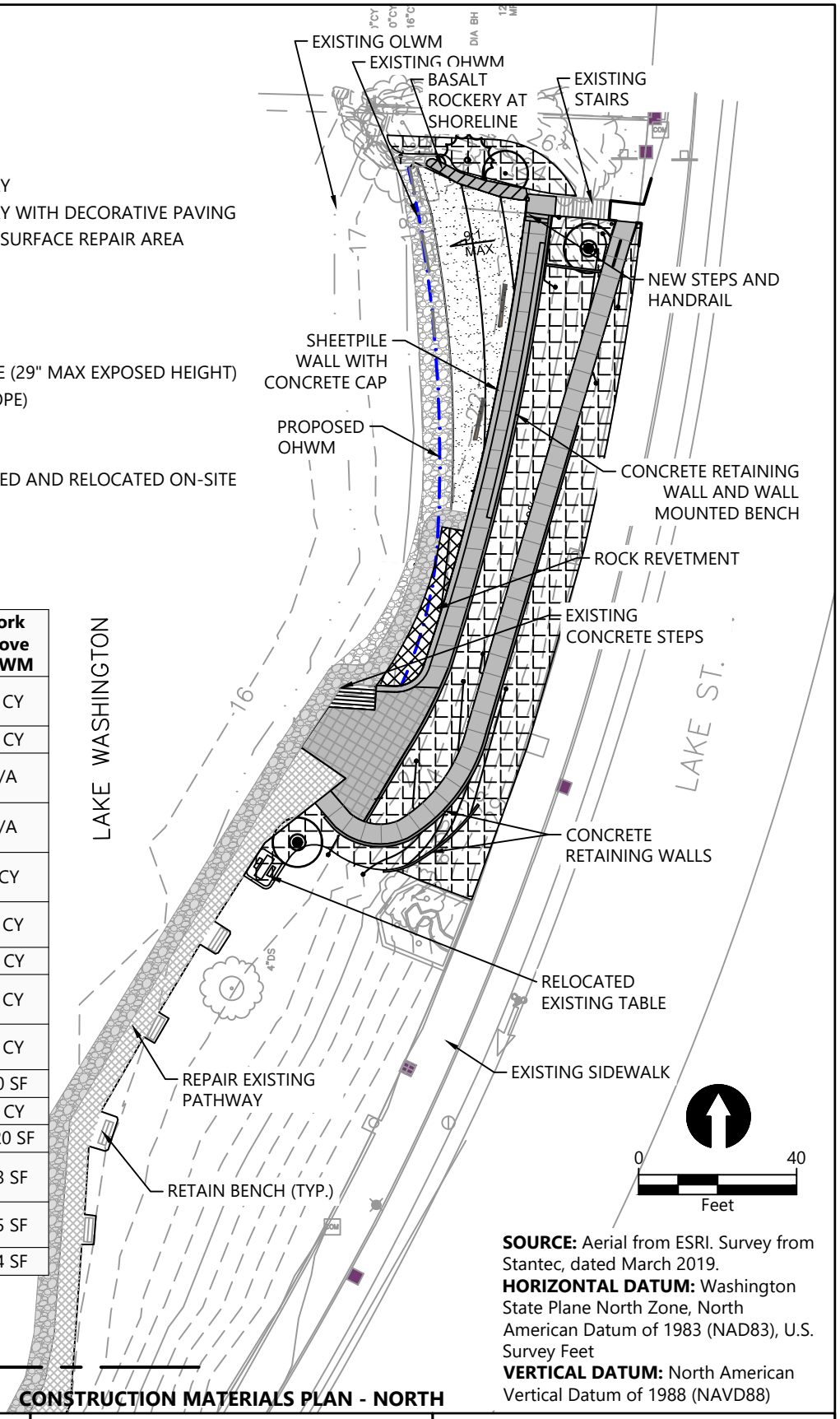

MATCH LINE, SEE FIGURE 12

SOURCE: Aerial from ESRI. Survey from Stantec, dated March 2019.
HORIZONTAL DATUM: Washington State Plane North Zone, North American Datum of 1983 (NAD83), U.S. Survey Feet
VERTICAL DATUM: North American Vertical Datum of 1988 (NAVD88)

CONSTRUCTION MATERIALS PLAN - NORTH

REFERENCE #: NWS-2020-347

APPLICANT: CITY OF KIRKLAND

LOCATION: 555 LAKE STREET SOUTH
KIRKLAND, WA 98033

ADJACENT PROPERTY OWNERS:
1 - LAKESIDE CONDOMINIUMS
2 - HARBOR LIGHTS CONDOMINIUMS

NAME: DAVID E. BRINK PARK SHORELINE RENOVATION PROJECT

PROPOSED: PARK INFRASTRUCTURE IMPROVEMENTS AND HABITAT ENHANCEMENT

PURPOSE: REPLACE AND REPAIR PARK SHORELINE STRUCTURES AND ENHANCE NEARSHORE HABITAT

DATUM: NAVD88
LATITUDE: 47.6708
LONGITUDE: -122.2062
S-T-R: 07 AND 08-25N-05E

IN: KIRKLAND
NEAR/AT: LAKE WASHINGTON
COUNTY: KING
STATE: WASHINGTON

DATE: AUGUST 2020

ANCHOR QEA
1201 3rd Ave, Suite 2600
Seattle, WA 98101
206-287-9130

K:\Projects\1006-City of Kirkland\David Brink Park Shoreline Renovation\Permit\1006-JP-006 (CM).dwg 11
May 19, 2020 7:55am cwee

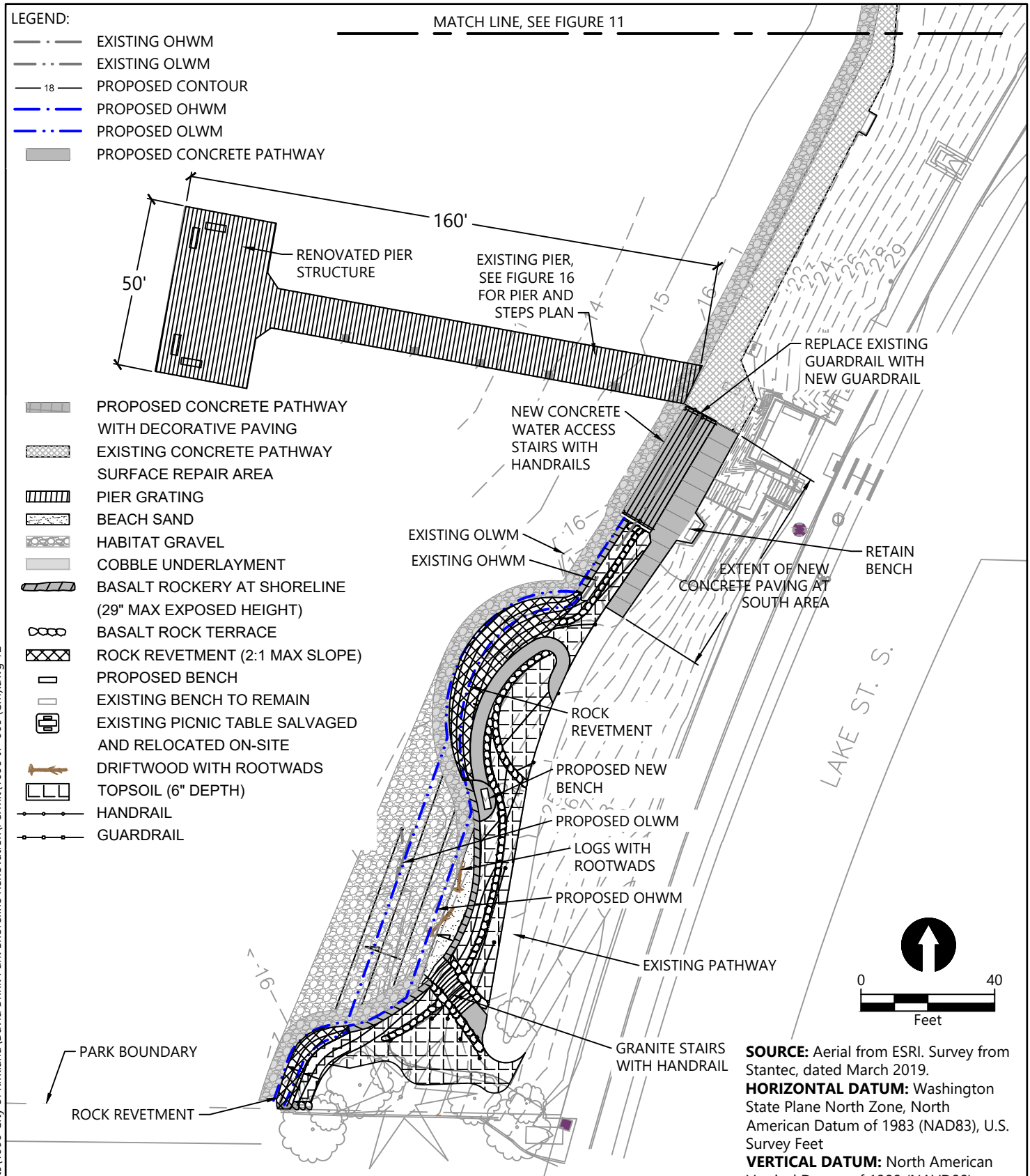

SOURCE: Aerial from ESRI. Survey from Stantec, dated March 2019.
HORIZONTAL DATUM: Washington State Plane North Zone, North American Datum of 1983 (NAD83), U.S. Survey Feet
VERTICAL DATUM: North American Vertical Datum of 1988 (NAVD88)

CONSTRUCTION MATERIALS PLAN - SOUTH

REFERENCE #: NWS-2020-347

APPLICANT: CITY OF KIRKLAND

LOCATION: 555 LAKE STREET SOUTH
KIRKLAND, WA 98033

ADJACENT PROPERTY OWNERS:
1 - LAKESIDE CONDOMINIUMS
2 - HARBOR LIGHTS CONDOMINIUMS

NAME: DAVID E. BRINK PARK SHORELINE RENOVATION PROJECT

PROPOSED: PARK INFRASTRUCTURE IMPROVEMENTS AND HABITAT ENHANCEMENT

PURPOSE: REPLACE AND REPAIR PARK SHORELINE STRUCTURES AND ENHANCE NEARSHORE HABITAT

DATUM: NAVD88
LATITUDE: 47.6708
LONGITUDE: -122.2062
S-T-R: 07 AND 08-25N-05E

IN: KIRKLAND
NEAR/AT: LAKE WASHINGTON
COUNTY: KING
STATE: WASHINGTON

DATE: AUGUST 2020

ANCHOR QEA
1201 3rd Ave, Suite 2600
Seattle, WA 98101
206-287-9130

K:\Projects\1006-City of Kirkland\David Brink Park Shoreline Renovation\Permit\1006-JP-006 (CM).dwg 12
May 19, 2020 7:55am cwee

LEGEND:

- PROPOSED NATIVE GROUNDCOVERS AND LOW SHRUBS - SHADE
- PROPOSED NATIVE GROUNDCOVERS AND LOW SHRUBS - SUN
- PROPOSED ORNAMENTAL GROUNDCOVERS AND PERENNIALS
- PROPOSED TREES
- PROPOSED LAWN RESTORATION AREA
- PROPOSED EMERGENT PLANTING

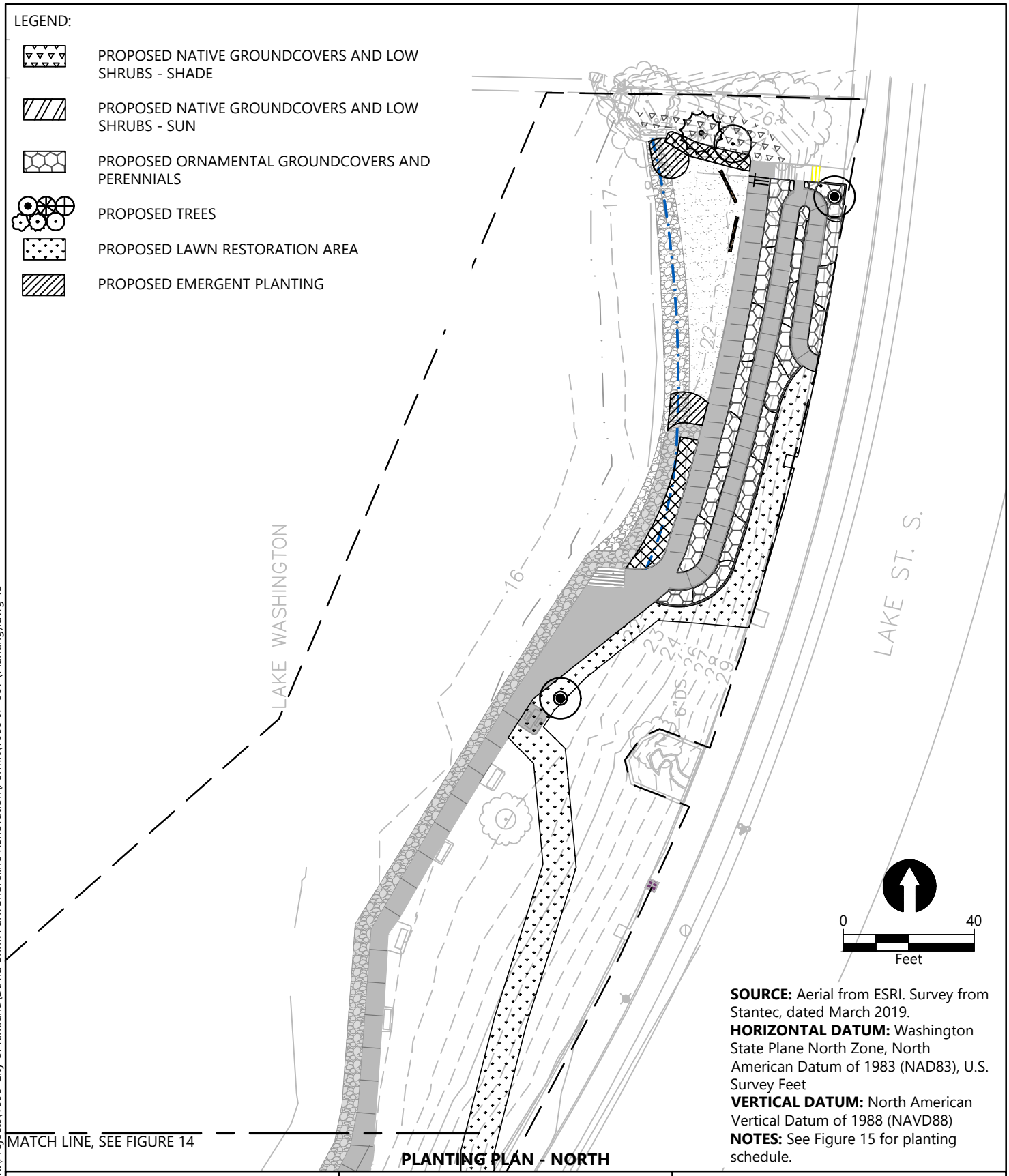

MATCH LINE, SEE FIGURE 14

PLANTING PLAN - NORTH

SOURCE: Aerial from ESRI. Survey from Stantec, dated March 2019.
HORIZONTAL DATUM: Washington State Plane North Zone, North American Datum of 1983 (NAD83), U.S. Survey Feet
VERTICAL DATUM: North American Vertical Datum of 1988 (NAVD88)
NOTES: See Figure 15 for planting schedule.

REFERENCE #: NWS-2020-347

APPLICANT: CITY OF KIRKLAND

LOCATION: 555 LAKE STREET SOUTH
KIRKLAND, WA 98033

ADJACENT PROPERTY OWNERS:
1 - LAKESIDE CONDOMINIUMS
2 - HARBOR LIGHTS CONDOMINIUMS

NAME: DAVID E. BRINK PARK SHORELINE RENOVATION PROJECT

PROPOSED: PARK INFRASTRUCTURE IMPROVEMENTS AND HABITAT ENHANCEMENT

PURPOSE: REPLACE AND REPAIR PARK SHORELINE STRUCTURES AND ENHANCE NEARSHORE HABITAT

DATUM: NAVD88
LATITUDE: 47.6708
LONGITUDE: -122.2062
S-T-R: 07 AND 08-25N-05E

ANCHOR QEA
1201 3rd Ave, Suite 2600
Seattle, WA 98101
206-287-9130

IN: KIRKLAND
NEAR/AT: LAKE WASHINGTON
COUNTY: KING
STATE: WASHINGTON

DATE: AUGUST 2020

K:\Projects\1006-City of Kirkland\David Brink Park Shoreline Renovation\Permit\1006-JP-007 (Planting).dwg 13
Aug 27, 2020 1:08pm aspooner

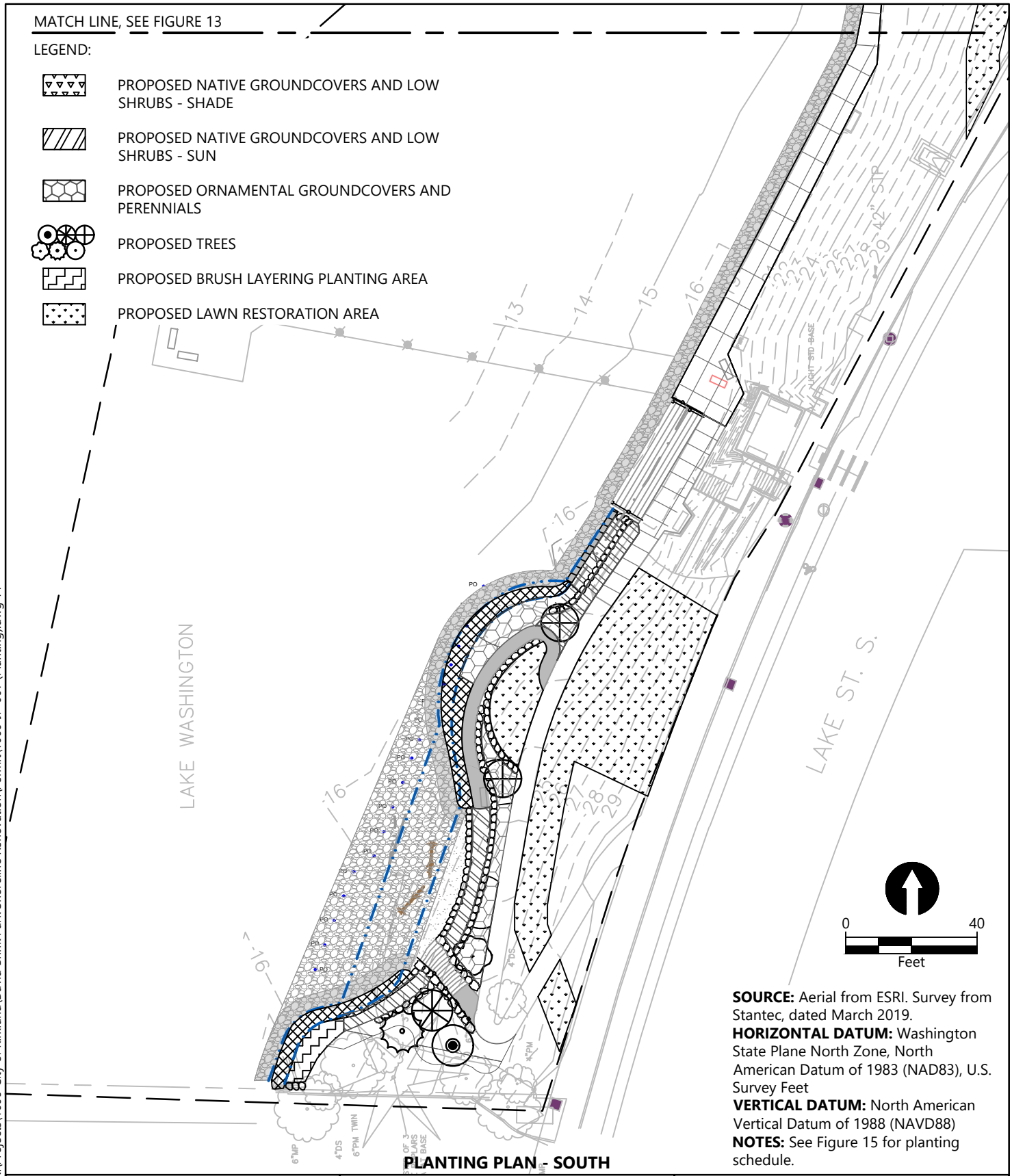

SOURCE: Aerial from ESRI. Survey from Stantec, dated March 2019.
HORIZONTAL DATUM: Washington State Plane North Zone, North American Datum of 1983 (NAD83), U.S. Survey Feet
VERTICAL DATUM: North American Vertical Datum of 1988 (NAVD88)
NOTES: See Figure 15 for planting schedule.

PLANTING PLAN - SOUTH

REFERENCE #: NWS-2020-347

APPLICANT: CITY OF KIRKLAND

LOCATION: 555 LAKE STREET SOUTH
KIRKLAND, WA 98033

ADJACENT PROPERTY OWNERS:
1 - LAKESIDE CONDOMINIUMS
2 - HARBOR LIGHTS CONDOMINIUMS

NAME: DAVID E. BRINK PARK SHORELINE RENOVATION PROJECT

PROPOSED: PARK INFRASTRUCTURE IMPROVEMENTS AND HABITAT ENHANCEMENT

PURPOSE: REPLACE AND REPAIR PARK SHORELINE STRUCTURES AND ENHANCE NEARSHORE HABITAT

DATUM: NAVD88
LATITUDE: 47.6708
LONGITUDE: -122.2062
S-T-R: 07 AND 08-25N-05E

IN: KIRKLAND
NEAR/AT: LAKE WASHINGTON
COUNTY: KING
STATE: WASHINGTON

DATE: AUGUST 2020

ANCHOR QEA
1201 3rd Ave, Suite 2600
Seattle, WA 98101
206-287-9130

K:\Projects\1006-City of Kirkland\David Brink Park Shoreline Renovation\Permit\1006-JP-007 (Planting).dwg 14
Aug 27, 2020 1:08pm aspooner

PLANT SCHEDULE

SYMBOL	COMMON NAME	SPECIES NAME	SIZE	SPACING	REMARKS
NATIVE TREES					
	Vine Maple	Acer circinatum	1.5" caliper	As Shown	
	Serviceberry	Amelanchier alnifolia	1.5" caliper	As Shown	
	Eastern Redbud	Cercis canadensis	1.5" caliper	As Shown	
	Strawberry Tree	Arbutus unedo	1.5" caliper	As Shown	
	Shore Pine	Pinus contorta	5-6' height	As Shown	
	Dappled Willow	Salix integra 'hakuro nishiki'	1.5" caliper	As Shown	
NATIVE GROUNDCOVERS AND SHRUBS - SHADE					
GS	Salal	Gaultheria shallon	2 gallon	3' O.C.	EQUAL MIX OF SPECIES
MA	Oregon Grape	Mahonia aquifolium	2 gallon	3' O.C.	
PM	Sword Fern	Polystichum munitum	1 gallon	3' O.C.	
TG	Trillium	Trillium grandiflorum	1 gallon	2' O.C.	
NATIVE GROUNDCOVERS AND SHRUBS - SUN					
FC	Common Strawberry	Fragaria chileonsis	4" pot	1' O.C.	EQUAL MIX OF SPECIES
SA	Snowberry	Symphoricarpos albus	1 gallon	4' O.C.	
RN	Nootka Rose	Rosa nutkana	1 gallon	2' O.C.	
MS	Kinnickinnick	Arctostaphylos uva-ursi	4" pot	1' O.C.	
ORNAMENTAL GROUNDCOVERS AND PERENNIALS					
AM	Ornamental Onion	Allium 'Millennium'	Bulb		EQUAL MIX OF SPECIES
EP	Purple Coneflower	Echinacea purpurea	1 gallon	2' O.C.	
EG	Blue Wildrye	Elymus glaucus	1 gallon	2' O.C.	
MS	Tufted hairgrass	Deschampsia cespitosa	1 gallon	2' O.C.	
BRUSH LAYERING PLANTING					
CS	Red Osier Dogwood	Cornus Sericea	livestake	2' O.C.	
EMERGENT PLANTING					
SA	Scirpus americanus	Scirpus americanus	10" plug	2' O.C.	INSTALL AT/ BELOW OHWM
SL	Scirpus lacustris	Scirpus lacustris	10" plug	2' O.C.	
SM	Small fruited bulrush	Scirpus microcarpus	10" plug	2' O.C.	INSTALL ABOVE OHWM
LAWN HYDROSEED					

PLANTING SCHEDULE

REFERENCE #: NWS-2020-347

APPLICANT: CITY OF KIRKLAND

LOCATION: 555 LAKE STREET SOUTH
KIRKLAND, WA 98033

ADJACENT PROPERTY OWNERS:
1 - LAKESIDE CONDOMINIUMS
2 - HARBOR LIGHTS CONDOMINIUMS

NAME: DAVID E. BRINK PARK SHORELINE RENOVATION PROJECT

PROPOSED: PARK INFRASTRUCTURE IMPROVEMENTS AND HABITAT ENHANCEMENT

PURPOSE: REPLACE AND REPAIR PARK SHORELINE STRUCTURES AND ENHANCE NEARSHORE HABITAT

DATUM: NAVD88
LATITUDE: 47.6708
LONGITUDE: -122.2062
S-T-R: 07 AND 08-25N-05E

IN: KIRKLAND
NEAR/AT: LAKE WASHINGTON
COUNTY: KING
STATE: WASHINGTON

DATE: AUGUST 2020

ANCHOR QEA
1201 3rd Ave, Suite 2600
Seattle, WA 98101
206-287-9130

K:\Projects\1006-City of Kirkland\David Brink Park Shoreline Renovation\Permit\1006-JP-007 (Planting).dwg 15
Aug 27, 2020 1:09pm aspooner

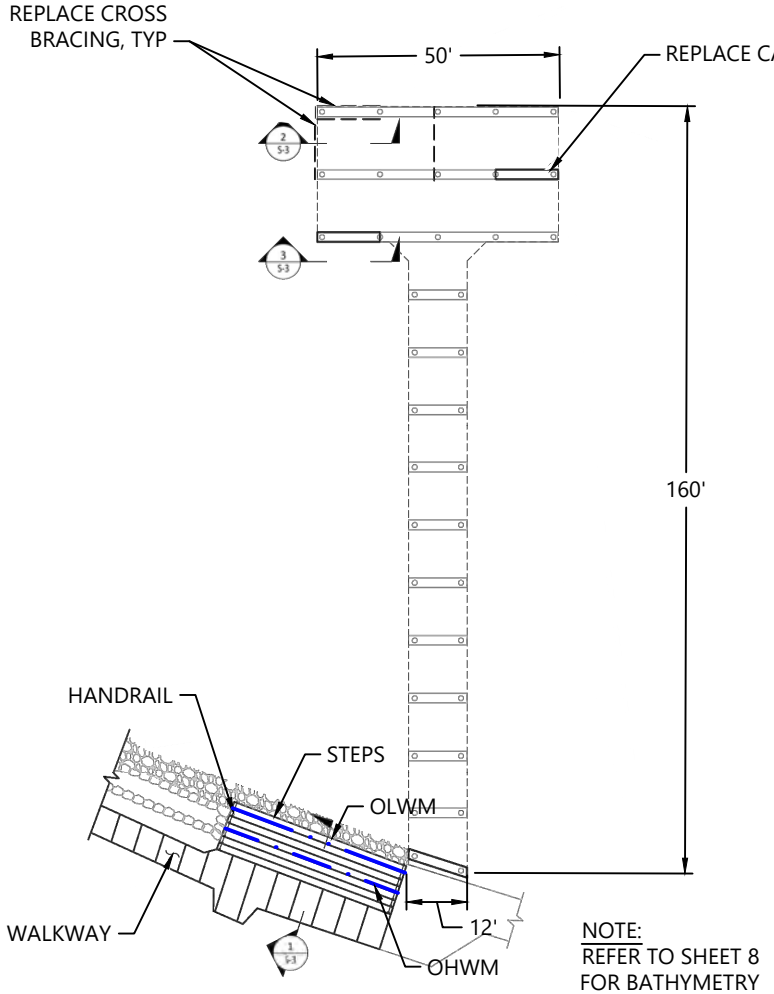

PILE AND CAP PLAN - PIER
SCALE: 1" = 40'

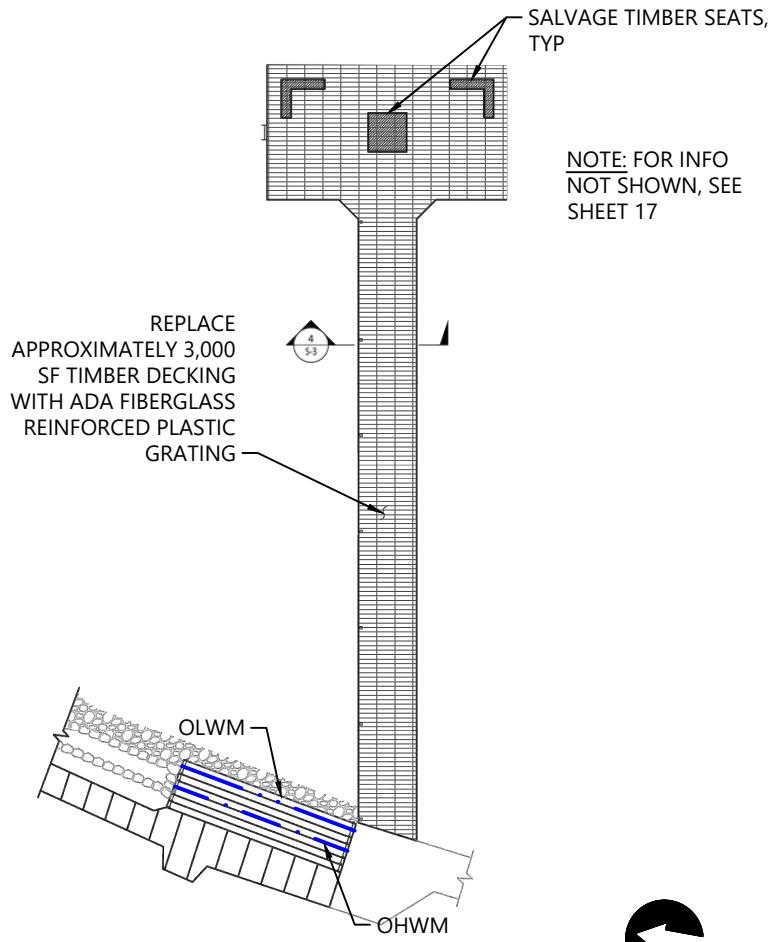

SURFACE PLAN - PIER
SCALE: 1" = 40'

0 40
Feet

PIER AND STEPS PLAN

SOURCE: DESIGN FROM WSP USA INC., DATED NOVEMBER 2019.
REFERENCE #: NWS-2020-347
NOTE: SEE FIGURE 17 FOR STRUCTURAL SECTIONS AND DETAILS.

APPLICANT: CITY OF KIRKLAND

LOCATION: 555 LAKE STREET SOUTH
KIRKLAND, WA 98033

ADJACENT PROPERTY OWNERS:
1 - LAKESIDE CONDOMINIUMS
2 - HARBOR LIGHTS CONDOMINIUMS

NAME: DAVID E. BRINK PARK SHORELINE RENOVATION PROJECT

PROPOSED: PARK INFRASTRUCTURE IMPROVEMENTS AND HABITAT ENHANCEMENT

PURPOSE: REPLACE AND REPAIR PARK SHORELINE STRUCTURES AND ENHANCE NEARSHORE HABITAT

DATUM: NAVD88
LATITUDE: 47.6708
LONGITUDE: -122.2062
S-T-R: 07 AND 08-25N-05E

IN: KIRKLAND
NEAR/AT: LAKE WASHINGTON
COUNTY: KING
STATE: WASHINGTON

DATE: AUGUST 2020

ANCHOR QEA
1201 3rd Ave, Suite 2600
Seattle, WA 98101
206-287-9130

K:\Projects\1006-City of Kirkland\David Brink Park Shoreline Renovation\Permit\1006-JP-009 (WSP Pier Design).dwg 16
May 19, 2020 7:55am cwee

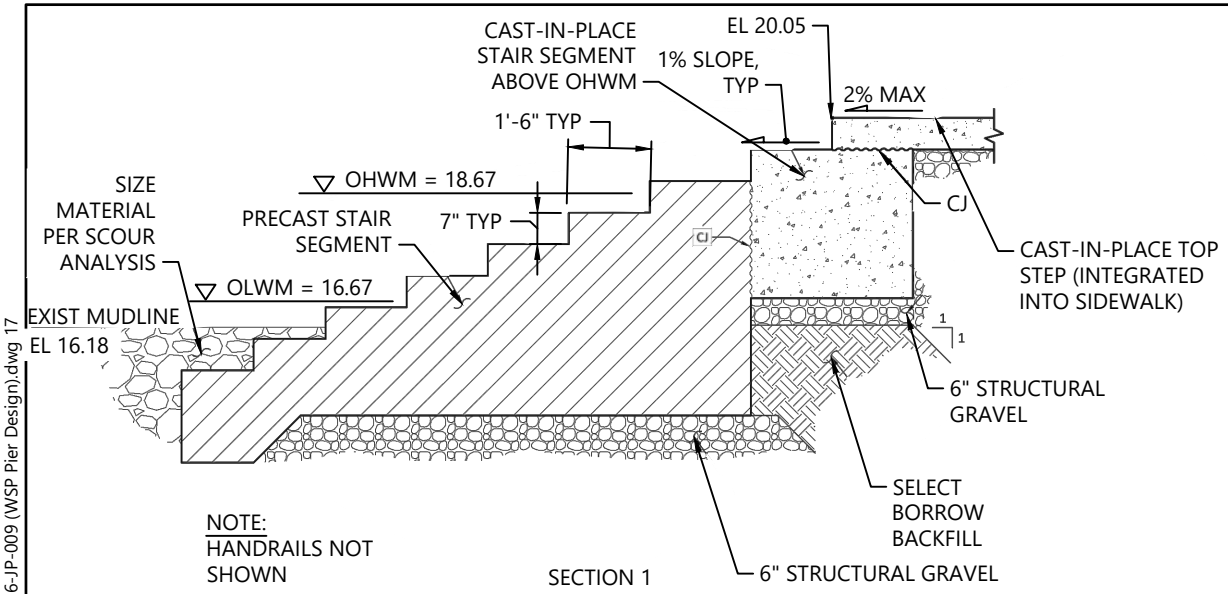

NOTE:
HANDRAILS NOT SHOWN

SECTION 1

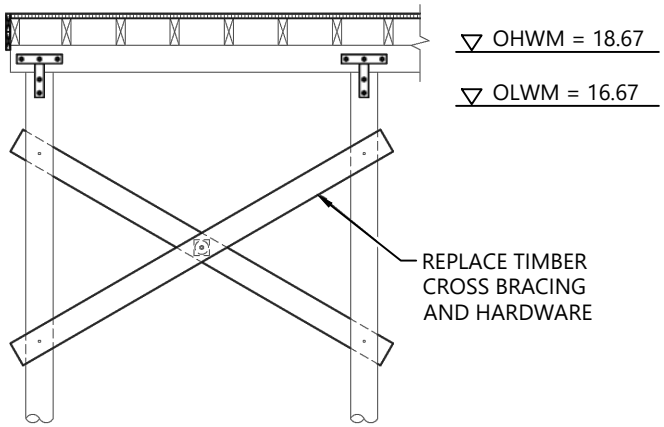

CROSS BRACE REPLACEMENT

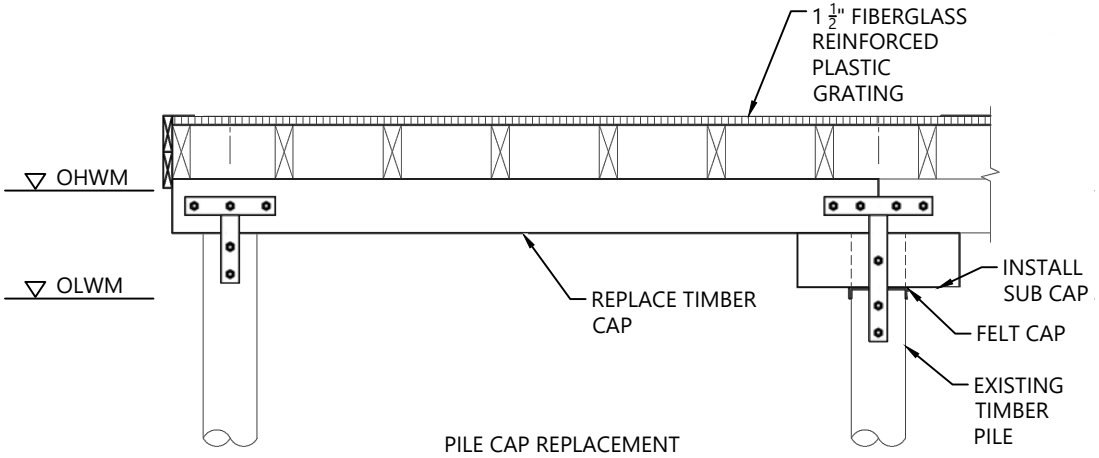

PILE CAP REPLACEMENT

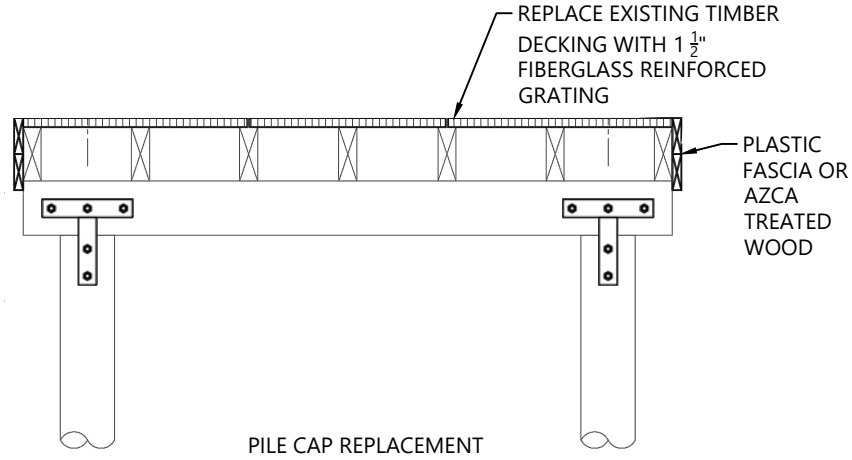

PILE CAP REPLACEMENT

STRUCTURAL SECTIONS AND DETAILS

REFERENCE #: NWS-2020-347
SOURCE: DESIGN FROM WSP USA INC., DATED NOVEMBER 2019.

APPLICANT: CITY OF KIRKLAND

LOCATION: 555 LAKE STREET SOUTH
KIRKLAND, WA 98033

ADJACENT PROPERTY OWNERS:
1 - LAKESIDE CONDOMINIUMS
2 - HARBOR LIGHTS CONDOMINIUMS

NAME: DAVID E. BRINK PARK SHORELINE RENOVATION PROJECT

PROPOSED: PARK INFRASTRUCTURE IMPROVEMENTS AND HABITAT ENHANCEMENT

PURPOSE: REPLACE AND REPAIR PARK SHORELINE STRUCTURES AND ENHANCE NEARSHORE HABITAT

DATUM: NAVD88
LATITUDE: 47.6708
LONGITUDE: -122.2062
S-T-R: 07 AND 08-25N-05E

IN: KIRKLAND
NEAR/AT: LAKE WASHINGTON
COUNTY: KING
STATE: WASHINGTON

DATE: AUGUST 2020

ANCHOR QEA
1201 3rd Ave, Suite 2600
Seattle, WA 98101
206-287-9130

K:\Projects\1006-City of Kirkland\David Brink Park Shoreline Renovation\Permit\1006-JP-009 (WSP Pier Design).dwg 17
May 19, 2020 7:56am cwee

HPA PERMIT

City of Kirkland

HYDRAULIC PROJECT APPROVAL

Washington Department of
Fish & Wildlife
PO Box 43234
Olympia, WA 98504-3234
(360) 902-2200

Issued Date: September 16, 2020
Project End Date: September 15, 2025

Permit Number: 2020-4-720+01
FPA/Public Notice Number: N/A
Application ID: 22618

PERMITTEE	AUTHORIZED AGENT OR CONTRACTOR
City of Kirkland	Anchor QEA, LLC
ATTENTION: Brian Baker	ATTENTION: Joshua Jensen
123 5th Avenue	1201 3rd Avenue, Ste 2600
Kirkland, WA 98033	Seattle, WA 98101

Project Name: David E. Brink Park Shoreline Renovation Project

Project Description: The City of Kirkland is proposing to repair aging shoreline infrastructure and provide habitat enhancements at David E. Brink Park on Lake Washington at 555 Lake Street South in Kirkland, Washington. The Project will address safety issues along the shoreline through a combination of repair, replacement, and removal of existing shoreline protection features as recommended in the David E. Brink Park Shoreline Renovation Existing Information Summary Report. The Project will also enhance user experience by providing new access pathways that meet ADA requirements. Proposed activities include the following:
• Removing and replacing a portion of the concrete bulkhead with a vinyl sheetpile wall with concrete cap at the north end and basalt rockery at the south end of the Park
• Removing and replacing the shoreline water access stairs south of the existing pier with a shorter stair feature
• Replacing the existing pier timber decking with a new grated decking
• Installing terraced rock walls, rock revetment, and vegetated areas behind the south end rockery with native low shoreline plantings
• Removing existing derelict piling near the shoreline
• Creating two new pocket beaches with native shoreline plantings
• Placing habitat gravel waterward of the shoreline protection features and pocket beaches
• Constructing ADA-compliant public access pathways

PROVISIONS

1. This STANDARD Hydraulic Project Approval (HPA) is issued for:

A. Repair to an existing bulkhead, including:
i) Replacement of approximately 142 linear feet of concrete bulkhead with a 140 linear foot vinyl sheet pile bulkhead with a concrete cap, set landward of the existing structure to create an approximately 110 linear foot pocket beach with approximately 30 linear feet of rock slope transitioning to the existing stairs;
ii) Resurfacing of approximately 2,320 square feet of an existing concrete pathway on the bulkhead;
iii) Replacement of 65-foot long concrete water access stairs with 38-foot long stairs and approximately 27 linear feet of rockery; AND
iv) Removal of approximately 187 linear feet of an existing concrete soldier pile bulkhead to create an approximatley 60 linear foot pocket beach with granite steps installed landward of OHWL, and enclosed on north and south end by rockery and rock revetment.

2. Replacement of approximately 3,000 square feet of solid wood decking on an existing public pier, with a minimum of 43% open space, over the entirety of pier.

3. Lakeshore enhancement for the benefit of fish life, including:
i) Installation of washed, well-rounded one-inch minus nourishment gravels in the new pocket beaches (186 cubic yards) and in the nearshore area, waterward of the repaired bulkhead (125 cubic yards);
ii) Implementation of a native re-vegetation plan along approximately 1540 square feet of the shoreline; AND
iii. Removal of (31) derelict creosote piles and fallen bulkhead material from the nearshore area.

TIMING - PLANS - INVASIVE SPECIES CONTROL

2. TIMING LIMITATION: You may begin the project immediately and you must complete the project by September 15, 2025, provided any work below the ordinary high water line (OHWL) occur between July 16 and March 15 of a given calendar year.

NOTE: This project occurs on Lake Washington where chinook, coho, steelhead, sockeye, and kokanee salmon are known to occur. This project is not located within a documented lake sockeye spawning area.

3. APPROVED PLANS: You must accomplish the work per plans and specifications submitted with the application and approved by the Washington Department of Fish and Wildlife, entitled, "202005019_PlanSheets_DavidBrinkPark.pdf," and, "20200519_ProjectDesc_DavidBrinkPark_clean.pdf," received July 29, 2020, and all supporting documents and communications uploaded to the Aquatic Protection Permitting System (APPS) project file; except as modified by this Hydraulic Project Approval. You must have a copy of these plans available on site during all phases of the project construction.

4. INVASIVE SPECIES CONTROL: Follow Method 1 for low risk locations (i.e. clean/drain/dry). Thoroughly remove visible dirt and debris from all equipment and gear (including drive mechanisms, wheels, tires, tracks, buckets, and undercarriage) before arriving and leaving the job site to prevent the transport and introduction of invasive species. For contaminated or high risk sites please refer to the Method 2 Decontamination protocol. Properly dispose of any water and chemicals used to clean gear and equipment. You can find this and additional information in the Washington Department of Fish and Wildlife's "Invasive Species Management Protocols", available online at https://wdfw.wa.gov/species-habitats/invasive/prevention.

NOTIFICATION REQUIREMENTS

5. PRE- AND POST-CONSTRUCTION NOTIFICATION: You, your agent, or contractor must contact the Washington Department of Fish and Wildlife by e-mail at HPAapplications@dfw.wa.gov; mail to Post Office Box 43234, Olympia, Washington 98504-3234; or fax to (360) 902-2946 at least three business days before starting work, and again within seven days after completing the work. The notification must include the permittee's name, project location, starting date for work or date the work was completed, and the permit number. The Washington Department of Fish and Wildlife may conduct inspections during and after construction; however, the Washington Department of Fish and Wildlife will notify you or your agent before conducting the inspection.

6. PHOTOGRAPHS: You, your agent, or contractor must take photographs of the job site before the work begins and after the work is completed. You must upload the photographs to the post-permit requirement page in the Aquatic Protection Permitting System (APPS) or mail them to Washington Department of Fish and Wildlife at Post Office Box 43234, Olympia, Washington 98504-3234 within 30-days after the work is completed.

7. FISH KILL/ WATER QUALITY PROBLEM NOTIFICATION: If a fish kill occurs or fish are observed in distress at the job site, immediately stop all activities causing harm. Immediately notify the Washington Department of Fish and Wildlife of the problem. If the likely cause of the fish kill or fish distress is related to water quality, also notify the Washington Military Department Emergency Management Division at 1-800-258-5990. Activities related to the fish kill or fish distress must not resume until the Washington Department of Fish and Wildlife gives approval. The Washington Department of Fish and Wildlife may require additional measures to mitigate impacts.

STAGING, JOB SITE ACCESS, AND EQUIPMENT

8. Establish staging areas (used for equipment storage, vehicle storage, fueling, servicing, and hazardous material

storage) in a location and manner that will prevent contaminants such as petroleum products, hydraulic fluid, fresh concrete, sediments, sediment-laden water, chemicals, or any other toxic or harmful materials from entering waters of the state.

9. Clearly mark boundaries to establish the limit of work associated with site access and construction.

10. Limit the removal of native bankline vegetation to the minimum amount needed to construct the project.

11. This Hydraulic Project Approval authorizes the removal of up to 10 trees to construct the pocket beaches as shown in the approved plans. Clearly mark all large woody vegetation authorized for removal before starting work.

12. Limit the use of equipment waterward of the ordinary high water line to that necessary to gain position for the work.

13. Remove soil or debris from the drive mechanisms (wheels, tires, tracks, etc.) and undercarriage of equipment prior to operating the equipment waterward of the ordinary high water line.

14. If wet or muddy conditions exist, in or near a riparian zone or wetland area, use equipment that reduces ground pressure.

15. Check equipment daily for leaks and complete any required repairs in an upland location before using the equipment in or near the water.

16. Use environmentally acceptable lubricants composed of biodegradable base oils such as vegetable oils, synthetic esters, and polyalkylene glycols in equipment operated in or near the water.

17. Operate and anchor vessels and barges during construction in a manner that protects native aquatic vegetation and prevents grounding.

CONSTRUCTION-RELATED SEDIMENT, EROSION AND POLLUTION CONTAINMENT

18. Protect all disturbed areas from erosion. Maintain erosion and sediment control until all work and cleanup of the job site is complete.

19. All erosion control materials that will remain onsite must be composed of 100% biodegradable materials.

20. Straw used for erosion and sediment control, must be certified free of noxious weeds and their seeds.

21. Stop all hydraulic project activities except those needed to control erosion and siltation, if flow conditions arise that will result in erosion or siltation of waters of the state.

22. Prevent project contaminants, such as petroleum products, hydraulic fluid, fresh concrete, sediments, sediment-laden water, chemicals, or any other toxic or harmful materials, from entering or leaching into waters of the state.

23. Use tarps or other methods to prevent treated wood, sawdust, trimmings, drill shavings and other debris from contacting the bed or waters of the state.

24. Deposit waste material from the project, such as construction debris, silt, excess dirt, or overburden, in an upland area above the limits of anticipated floodwater unless the material is approved by the Washington Department of Fish and Wildlife for reuse in the project.

25. Do not burn wood treated with preservatives, trash, waste, or other deleterious materials waterward of the ordinary high water line.

26. Deposit all trash from the project at an appropriate upland disposal location.

CONSTRUCTION MATERIALS

27. Store all construction and deconstruction material in a location and manner that will prevent contaminants such as petroleum products, hydraulic fluid, fresh cement, sediments, sediment-laden water, chemicals, or any other toxic or harmful materials from entering waters of the state.

28. Do not stockpile construction material waterward of the ordinary high water line unless it is contained on a barge.

29. Use only clean, suitable material as fill material (no trash, debris, car bodies, tires, asphalt, concrete, etc.).

30. To prevent leaching, construct forms to contain any wet concrete. Place impervious material over wet concrete that will come in contact with waters of the state. Forms and impervious materials must remain in place until the concrete is cured.

31. Do not use wood treated with oil-type preservatives (creosote, pentachlorophenol) in any hydraulic project. You may use wood treated with waterborne preservatives (ACZA, ACQ) provided the wood is approved by the Western Wood Preservers Institute for use in the aquatic environment. Any use of treated wood in the aquatic environment must follow guidelines and best management practices available at www.wwpinstitute.org.

32. You may use products made from recycled tires that are specifically manufactured for use in the aquatic environment.

PIER REPAIR

33. This approval is for the repair/replacement of the existing structure only and does not authorize the expansion of the structure.

34. Prior to construction, reestablish the pier, ramp, and float or dock structure(s) centerline using the same methodology used to establish the centerline on the construction drawings to avoid shading native aquatic vegetation.

35. The pier structure must not exceed a total length of 160 feet.

36. The structure must not exceed current width dimensions as specified in the approved plans.

37. The structure must include functional grating. The grating material's open area must be at least forty percent and cover the entire deck area.

38. Do not construct skirting, including batter fencing, around piers, docks or floats.

39. Use low-intensity lights that are located and shielded to prevent light from reaching the water surface.

40. Use of treated wood for decking is not authorized, but may be used for structural elements. Treated wood subject to abrasion by vessels, floats, or other objects must incorporate approved design features such as rub strips to minimize abrasion of the wood.

41. This HPA does not authorize pile repair or driving of new piles.

PILE REMOVAL

42. Remove the 31 derelict creosote piling and dispose of them in an upland area unless the material is approved by the Washington Department of Fish and Wildlife for reuse in the project.

43. Piling removal:
a. Vibratory or direct pull extraction is the preferred method of pile removal.
b. Place the piling on a construction barge or other dry storage site after the piling is removed. The piling must not be shaken, hosed off, left hanging to dry or any other action intended to clean or remove adhering material from the piling near waters of the state.
c. If a treated wood piling breaks during extraction, remove the stump from the water column by fully extracting. If the stump cannot be fully extracted, remove the remainder of the stump with a clamshell bucket, chain, or similar means, or cut it off three feet below the mudline. Cap all buried cut stumps and fill holes left by piling extraction with clean sediment that matches the native material.
d. When removing creosote piling, containment booms and absorbent booms (or other oil absorbent fabric) must be placed around the perimeter of the work area to capture wood debris, oil, and other materials released into marine waters as a result of construction activities to remove creosote pilings. All debris on the bed and accumulated in containments structures must be collected and disposed upland at an approved disposal site.
e. Submit post-project surveys (e.g., underwater video, photos at low-tide) along transects within the project area to Washington Department of Fish and Wildlife within two weeks of pile removal to verify debris removal.

LAKE SHORELINE STABILIZATION

44. This HPA authorizes the replacement of up to 356 linear feet of existing concrete bulkhead with a 140 linear foot vinyl sheet pile bulkhead, 38-foot long concrete water access stairs, and installation of rockery and rock revetment as stabilization along the remaining length, as specified in the approved plans.

45. Bury the base of the structure deep enough to prevent undermining.

46. Rock used for the bulkhead construction must be composed of clean, angular material of a sufficient size to prevent it from being washed away by high water or wave action.

47. Do not use native bed material that is waterward of the ordinary high water line for backfill.

48. Do not stockpile dredged material waterward of the ordinary high water line.

49. This HPA authorized the installation of up to 50 cubic yards of sand in the pocket beach areas, landward of the ordinary high water line.

50. Use fir, cedar, or other coniferous species to construct the log or rootwad fish habitat structure(s).

51. Securely anchor the large wood (embedded, chain, cable, duckbill, or manta ray anchors) to provide stable and functional lakeshore habitat.

52. This HPA authorizes only up to 16 cubic yards of rockery and rock revetment material and up to 125 cubic yards of cobble underlayment (WSDOT specification 9-03.11[2]) to be placed waterward of the toe of the existing structure, as shown in the approved plans.

LAKESHORE ENHANCEMENT

53. Remove any riprap scattered, or abandoned outside the original design footprint from the bed and deposit it an upland area above the limits of the lake.

54. The installation of at minimum, 186 cubic yards of nourishment gravels in the pocket beaches and 125 cubic yards in the nearshore area, is required as part of this HPA. Gravels shall be clean, well-rounded and meet the following specifications: 100% less than 1 inch, 85% less than 0.5 inch, and 40% less than 0.25 inch.

55. Replant the job site with the plant species composition and planting densities approved by the Washington Department of Fish and Wildlife, as shown on pages 13-15 of the approved plans.

56. Complete replanting of riparian vegetation during the first dormant season (late fall through late winter) after project completion per the approved plan. Maintain plantings for at least three years to ensure at least eighty percent of the plantings survive. Failure to achieve the eighty percent survival in year three will require you to submit a plan with follow-up measures to achieve requirements or reasons to modify requirements.

57. Install fencing or other structures to prevent livestock, wildlife, or unauthorized persons from accessing the replanted riparian and wetland sites until the plantings are well established.

DEMOBILIZATION AND CLEANUP

58. Do not relocate removed or replaced structures within waters of the state. Remove and dispose of these structures in an upland area above the limits of anticipated floodwater.

59. To prevent fish from stranding, backfill trenches, depressions, and holes in the bed that may entrain fish during high water or wave action.

60. Upon completion of the project, remove all materials or equipment from the site and dispose of all excess spoils and waste materials in an upland area above the limits of anticipated floodwater.

61. Remove temporary erosion and sediment control methods after job site is stabilized or within three months of project completion, whichever is sooner.

LOCATION #1:	Site Name: David E Brink Park

HYDRAULIC PROJECT APPROVAL

Washington Department of
Fish & Wildlife
PO Box 43234
Olympia, WA 98504-3234
(360) 902-2200

Issued Date: September 16, 2020
Project End Date: September 15, 2025

Permit Number: 2020-4-720+01
FPA/Public Notice Number: N/A
Application ID: 22618

	555 Lake Street South, Kirklan, WA 98033					
WORK START:	September 16, 2020			WORK END:	September 15, 2025	
WRIA		Waterbody:			Tributary to:	
08 - Cedar - Sammamish		Lake Washington			Ship Canal	
1/4 SEC:	Section:	Township:	Range:	Latitude:	Longitude:	County:
NE 1/4	07	25 N	05 E	47.6708	-122.2062	King
Location #1 Driving Directions						
From Interstate 405 (I-405) South or North, take Exit 17 to merge onto NE 70th Place heading southwest to North 68th Street. Take a right onto State Street, and a left on 7th Avenue South. Take a left onto Lake Street South and the Park will be on the right. See Sheet 1 in the attached JARPA plan set (Attachment 3) for a vicinity map.						

APPLY TO ALL HYDRAULIC PROJECT APPROVALS

This Hydraulic Project Approval pertains only to those requirements of the Washington State Hydraulic Code, specifically Chapter 77.55 RCW. Additional authorization from other public agencies may be necessary for this project. The person(s) to whom this Hydraulic Project Approval is issued is responsible for applying for and obtaining any additional authorization from other public agencies (local, state and/or federal) that may be necessary for this project.

This Hydraulic Project Approval shall be available on the job site at all times and all its provisions followed by the person (s) to whom this Hydraulic Project Approval is issued and operator(s) performing the work.

This Hydraulic Project Approval does not authorize trespass.

The person(s) to whom this Hydraulic Project Approval is issued and operator(s) performing the work may be held liable for any loss or damage to fish life or fish habitat that results from failure to comply with the provisions of this Hydraulic Project Approval.

Failure to comply with the provisions of this Hydraulic Project Approval could result in civil action against you, including, but not limited to, a stop work order or notice to comply, and/or a gross misdemeanor criminal charge, possibly punishable by fine and/or imprisonment.

All Hydraulic Project Approvals issued under RCW 77.55.021 are subject to additional restrictions, conditions, or revocation if the Department of Fish and Wildlife determines that changed conditions require such action. The person(s) to whom this Hydraulic Project Approval is issued has the right to appeal those decisions. Procedures for filing appeals are listed below.

MINOR MODIFICATIONS TO THIS HPA: You may request approval of minor modifications to the required work timing or to the plans and specifications approved in this HPA unless this is a General HPA. If this is a General HPA you must use the Major Modification process described below. Any approved minor modification will require issuance of a letter documenting the approval. A minor modification to the required work timing means any change to the work start or end dates of the current work season to enable project or work phase completion. Minor modifications will be approved only if spawning or incubating fish are not present within the vicinity of the project. You may request subsequent minor modifications to the required work timing. A minor modification of the plans and specifications means any changes in the materials, characteristics or construction of your project that does not alter the project's impact to fish life or habitat and does not require a change in the provisions of the HPA to mitigate the impacts of the modification. If you originally applied for your HPA through the online Aquatic Protection Permitting System (APPS), you may request a minor modification through APPS. A link to APPS is at http://wdfw.wa.gov/licensing/hpa/. If you did not use APPS you must submit a written request that clearly indicates you are seeking a minor modification to an existing HPA. Written requests must include the name of the applicant, the name of the authorized agent if one is acting for the applicant, the APP ID number of the HPA, the date issued, the permitting biologist, the requested changes to the HPA, the reason for the requested change, the date of the request, and the requestor's signature. Send by mail to: Washington Department of Fish and Wildlife, PO Box 43234, Olympia, Washington 98504-3234, or by email to HPAapplications@dfw.wa.gov. You should allow up to 45 days for the department to process your request.

MAJOR MODIFICATIONS TO THIS HPA: You may request approval of major modifications to any aspect of your HPA. Any approved change other than a minor modification to your HPA will require issuance of a new HPA. If you originally applied for your HPA through the online Aquatic Protection Permitting System (APPS), you may request a major modification through APPS. A link to APPS is at http://wdfw.wa.gov/licensing/hpa/. If you did not use APPS you must submit a written request that clearly indicates you are requesting a major modification to an existing HPA. Written requests must include the name of the applicant, the name of the authorized agent if one is acting for the applicant, the APP ID number of the HPA, the date issued, the permitting biologist, the requested changes to the HPA, the reason for the requested change, the date of the request, and the requestor's signature. Send your written request by mail to: Washington Department of Fish and Wildlife, PO Box 43234, Olympia, Washington 98504-3234. You may email your request for a major modification to HPAapplications@dfw.wa.gov. You should allow up to 45 days for the department to process your request.

APPEALS INFORMATION

If you wish to appeal the issuance, denial, conditioning, or modification of a Hydraulic Project Approval (HPA), Washington Department of Fish and Wildlife (WDFW) recommends that you first contact the department employee who issued or denied the HPA to discuss your concerns. Such a discussion may resolve your concerns without the need for further appeal action. If you proceed with an appeal, you may request an informal or formal appeal. WDFW encourages you to take advantage of the informal appeal process before initiating a formal appeal. The informal appeal process includes a review by department management of the HPA or denial and often resolves issues faster and with less legal complexity than the formal appeal process. If the informal appeal process does not resolve your concerns, you may advance your appeal to the formal process. You may contact the HPA Appeals Coordinator at (360) 902-2534 for more information.

A. INFORMAL APPEALS: WAC 220-660-460 is the rule describing how to request an informal appeal of WDFW actions taken under Chapter 77.55 RCW. Please refer to that rule for complete informal appeal procedures. The following information summarizes that rule.

HYDRAULIC PROJECT APPROVAL

Issued Date: September 16, 2020
Project End Date: September 15, 2025

Permit Number: 2020-4-720+01
FPA/Public Notice Number: N/A
Application ID: 22618

A person who is aggrieved by the issuance, denial, conditioning, or modification of an HPA may request an informal appeal of that action. You must send your request to WDFW by mail to the HPA Appeals Coordinator, Department of Fish and Wildlife, Habitat Program, PO Box 43234, Olympia, Washington 98504-3234; e-mail to HPAapplications@dfw.wa.gov; fax to (360) 902-2946; or hand-delivery to the Natural Resources Building, 1111 Washington St SE, Habitat Program, Fifth floor. WDFW must receive your request within 30 days from the date you receive notice of the decision. If you agree, and you applied for the HPA, resolution of the appeal may be facilitated through an informal conference with the WDFW employee responsible for the decision and a supervisor. If a resolution is not reached through the informal conference, or you are not the person who applied for the HPA, the HPA Appeals Coordinator or designee may conduct an informal hearing or review and recommend a decision to the Director or designee. If you are not satisfied with the results of the informal appeal, you may file a request for a formal appeal.

B. FORMAL APPEALS: WAC 220-660-470 is the rule describing how to request a formal appeal of WDFW actions taken under Chapter 77.55 RCW. Please refer to that rule for complete formal appeal procedures. The following information summarizes that rule.

A person who is aggrieved by the issuance, denial, conditioning, or modification of an HPA may request a formal appeal of that action. You must send your request for a formal appeal to the clerk of the Pollution Control Hearings Boards and serve a copy on WDFW within 30 days from the date you receive notice of the decision. You may serve WDFW by mail to the HPA Appeals Coordinator, Department of Fish and Wildlife, Habitat Program, PO Box 43234, Olympia, Washington 98504-3234; e-mail to HPAapplications@dfw.wa.gov; fax to (360) 902-2946; or hand-delivery to the Natural Resources Building, 1111 Washington St SE, Habitat Program, Fifth floor. The time period for requesting a formal appeal is suspended during consideration of a timely informal appeal. If there has been an informal appeal, you may request a formal appeal within 30 days from the date you receive the Director's or designee's written decision in response to the informal appeal.

C. FAILURE TO APPEAL WITHIN THE REQUIRED TIME PERIODS: If there is no timely request for an appeal, the WDFW action shall be final and unappealable.

Habitat Biologist	Ashley.Kees@dfw.wa.gov	Ashley Kees	for Director
Ashley Kees	425-765-9157		WDFW

SHORELINE PERMIT

under separate cover

City of Kirkland

SEPA PERMIT

City of Kirkland

CITY OF KIRKLAND
Planning and Building Department
123 5th Avenue, Kirkland, WA 98033
www.kirklandwa.gov ~ 425.587.3600

DETERMINATION OF NON-SIGNIFICANCE (DNS)

DATE ISSUED: July 24, 2020

File No.: SEP20-00213

Project Name: David E. Brink Park Shoreline Renovation Project

City Planner: Jennifer Anderer

Phone: (425) 587-3239

Email: janderer@kirklandwa.gov

Project Location/Address: 555 Lake Street South

Proponent: Brian Baker, Public Works Engineer

Project Description: Repair of aging shoreline infrastructure and provide habitat enhancements through a combination of repair, replacement, and removal of existing shoreline protection features as recommended in the David E. Brink Park Shoreline Renovation Existing Information Summary Report (Anchor QEA 2019). The project will also be providing new access pathways that meet Americans with Disabilities Act (ADA) requirements.

Lead agency is the City of Kirkland.

The lead agency for this proposal has determined that it does not have a probable significant adverse impact on the environment. An environmental impact statement (EIS) is not required under RCW 43.21.030(2)(c). This decision was made after review of a completed environmental checklist and other information on file with the lead agency. This information is available to the public upon request.

Comment Period Information:

This DNS is issued under WAC 197-11-340(2); the lead agency will not act on this proposal for 14 days from the date issued. Comments must be submitted to Jennifer Anderer, project planner at janderer@kirklandwa.gov by 5:00 PM on August 7, 2020. Please reference file number SEP20-00213.

Responsible Official: _____ July 20, 2020

Adam Weinstein, AICP, Planning & Building Director — Date
City of Kirkland
Planning & Building Department
123 Fifth Avenue, Kirkland, WA 98033 – 425.587.3600

Appeal Information:

There is no administrative appeal period for this DNS (KMC 24.02.230(a)).

Publish in The Seattle Times on: Monday, July 27, 2020

Distribute this notice with a copy of the Environmental Checklist to:

GENERAL NOTICING

- Department of Ecology - Environmental Review
- Muckleshoot Tribal Council - Environmental Division, Tribal Archeologist
- Muckleshoot Tribal Council - Environmental Division, Fisheries Division Habitat
- Cascade Water Alliance – Director of Planning
- Moss Bay Neighborhood Association
- Lake Washington School District No. 414: Budget Manager and Director of Support Services
- Washington State Dept. of Archaeology & Historic Preservation
- King County Dept. of Transportation - Employer Transportation Representative
- Seattle & King County Public Health - SEPA Coordinator

AGENCIES WITH JURISDICTION, AFFECTED AGENCIES, AND/OR INTERESTED PARTIES

- Department of Ecology - Environmental Review
- Department of Fish and Wildlife – Olympia
- U.S. Army Corps of Engineers - Seattle District

cc: Applicant
Planning Department File, Case No. SHR20-00202

Distributed by: _____ July 24, 2020

(Karin Bayes, Office Specialist) Date

CITY OF KIRKLAND
Planning & Building Department
123 5th Avenue, Kirkland, WA 98033
425.587.3600 ~ www.kirklandwa.gov

MEMORANDUM

To: Adam Weinstein, AICP, SEPA Responsible Official

From: Jennifer Anderer, Planner

Date: 07/20/2020

File: SEP20-00213

Subject: STATE ENVIRONMENTAL POLICY ACT (SEPA) DETERMINATION
DAVID E. BRINK PARK SHORELINE RENOVATION PROJECT

GENERAL

The subject property is located at 555 Lake Street South (see Attachment 1) and currently contains David E. Brink Park, a City owned public park. The applicant, Brian Baker with the City of Kirkland, has proposed to repair aging shoreline infrastructure and provide habitat enhancements through a combination of repair, replacement, and removal of existing shoreline protection features as recommended in the David E. Brink Park Shoreline Renovation Existing Information Summary Report (Anchor QEA 2019). The project will also be providing new access pathways that meet Americans with Disabilities Act (ADA) requirements. Proposed improvements are identified in Attachment 2.

ANALYSIS

The SEPA "threshold determination" is the formal decision as to whether the proposal is likely to cause a significant adverse environmental impact for which mitigation cannot be identified. If it is determined that a proposal may have a significant adverse impact that cannot be mitigated, an Environmental Impact Statement (EIS) would be required.

Many environmental impacts are mitigated by City codes and development regulations. For example, the Kirkland Zoning Code has regulations that protect sensitive areas, limit noise, provide setbacks, establish height limits, etc. Where City regulations have been adopted to address an environmental impact, it is presumed that such regulations are adequate to achieve sufficient mitigation [WAC 197-11-660(1)(e) and (g)].

I have had an opportunity to visit the subject property and review the following documents:

Applicant's Proposal (see Attachment 1)

Environmental Checklist dated April 2, 2020 (see Attachment 2)

It will be necessary to further analyze certain aspects of the proposal to determine if the project complies with all the applicable City codes and policies. That analysis is most appropriately addressed with the shoreline substantial development exemption permit.

CONCLUSION

Based on my review of all available information and adopted policies of the City, I have not identified any significant adverse environmental impacts. Therefore, I recommend that a Determination of Non-Significance be issued for this proposed action.

ATTACHMENTS

1. Vicinity Map
2. Environmental Checklist

☒ I concur ☐ I do not concur

Comments:_____

_____

_____

_____

_____

_____ ____July 20, 2020
Adam Weinstein, Planning & Building Director Date

cc: applicant

STATE ENVIRONMENTAL POLICY ACT (SEPA) SUBMITTAL

DAVID E. BRINK PARK SHORELINE RENOVATION

CITY OF KIRKLAND PARKS AND COMMUNITY SERVICES DEPARTMENT AND PUBLIC WORKS

VICINITY MAP

DRAWING INDEX		
SHEET #	DRAWING #	TITLE
1	G-1	COVER SHEET
2	G-2	COMPOSITE SITE PLAN
3	G-3.1	BOUNDARY SURVEY
4	G-3.2	EXISTING CONDITIONS PLAN - SOUTH
5	G-3.3	EXISTING CONDITIONS PLAN - NORTH
6	T-1	TEMPORARY EROSION AND STORMWATER CONTROL (TESC) PLAN
7	T-2	TESC DETAILS
8	T-3	TESC NOTES
9	D-1.1	CLEARING AND DEMOLITION PLAN - SOUTH
10	D-1.2	CLEARING AND DEMOLITION PLAN - NORTH
11	C-1.1	GRADING PLAN - SOUTH
12	C-1.2	GRADING PLAN - NORTH
13	C-2	GRADING AND MATERIALS SECTIONS
14	C-3	GRADING AND MATERIALS SECTIONS
15	C-4	PATHWAY AND WALL PROFILES
16	CM-1.1	CONSTRUCTION MATERIALS PLAN - SOUTH
17	CM-1.2	CONSTRUCTION MATERIALS PLAN - NORTH
18	CM-2	CONSTRUCTION MATERIALS DETAILS
19	CM-3	CONSTRUCTION MATERIALS DETAILS
20	CM-4	CONSTRUCTION MATERIALS DETAILS
21	S-1	STRUCTURAL PLAN
22	S-2	PIER AND STEPS PLAN
23	S-3	STRUCTURAL SECTIONS AND DETAILS
24	S-4	STRUCTURAL SECTIONS AND DETAILS
25	L-1.1	PLANTING PLAN - SOUTH
26	L-1.2	PLANTING PLAN - NORTH
27	L-2	PLANTING DETAILS

APPLICANT: CITY OF KIRKLAND
PROJECT ADDRESS: 555 LAKE STREET SOUTH, KIRKLAND, WA 98033
PROPERTY OWNERS AND PARCEL INFORMATION:
- CITY OF KIRKLAND: 082505-9133, 082505-9143, 082505-9074

SECTION/TOWNSHIP/RANGE: 08-25N-05W
ADJACENT PROPERTY OWNERS: HARBOR LIGHTS CONDOMINIUM, 733 LAKESIDE CONDOMINIUM

PARCEL LEGAL DESCRIPTIONS:

082505-9133: POR GL 2 & SH LDS ADJ LY W OF LAKE AVE & LY S OF S LN HARBOR LIGHTS COND EXT TO INNER HARBOR LN & LY N OF N LN OF 7TH AVE S EXT TO INNER HARBOR LN

082505-9143: N 50 FT MEAS AT R/A TO N LN OF THAT POR GL 2 & SH LDS ADJ LY W OF LAKE AVE & LY S OF S LN OF CRANE & DICKEYS ADD TO KIRKLAND PROD W

082505-9074: POR OF BLK 6 IN COMMERCIAL ADD TO KIRKLAND & THAT POR OF FIRST CLASS SHORELANDS IN FRONT OF GOVT LOT 2 IN STR 08-25-05 DAF: BEG AT NXN OF S LN OF CRANE & DICKEY'S ADD TO KIRKLAND PRODUCED WLY WITH WLY MGN OF LAKE AVE TH SLY ON SD WLY MGN OF LAKE AVE ALG ARC OF CRV TO LEFT RADIUS OF 1130 FT DIST 204.36 FT TH CONTG ALG SD WLY MGN S 12-32-29 W 14.53 FT TH S 88-16-46 W 440.99 FT TO INNER HARBOR LN OF LAKE WASH TH N 01-47-17 W ALG SD INNER HARBOR LINE 208.08 FT TH N 88-34-34 E 516.35 FT TO BEG LESS N 50 FT THOF AS MEAS AT R/A TO N LN

NOTES:

1. HORIZONTAL DATUM: WASHINGTON STATE PLANE NORTH ZONE, NORTH AMERICAN DATUM OF 1983 (NAD83), U.S. SURVEY FEET
2. VERTICAL DATUM: NAVD 88

ONE INCH
AT FULL SIZE, IF NOT ONE INCH SCALE ACCORDINGLY

SEPA SUBMITTAL
NOT FOR CONSTRUCTION

ANCHOR QEA

CITY OF KIRKLAND WASHINGTON
123 Fifth Ave
Kirkland, WA 98033
(425) 587-3300

REVISIONS				
REV	DATE	BY	APP'D	DESCRIPTION

DESIGNED BY: A. SPOONER
DRAWN BY: C. WEE/C. HEWETT
CHECKED BY: P. HUMMEL
APPROVED BY: P. HUMMEL
SCALE: AS SHOWN
DATE: MARCH 2020

DAVID E. BRINK PARK SHORELINE RENOVATION

COVER SHEET

G-1

SHEET # 1 OF 27

K:\Projects\006-City of Kirkland\David Brink Park Shoreline Renovation\Construction Plans\006-PL-Cover Sheet.dwg G-1 COVER SHEET
Mar 31, 2020, 11:41am dhewett

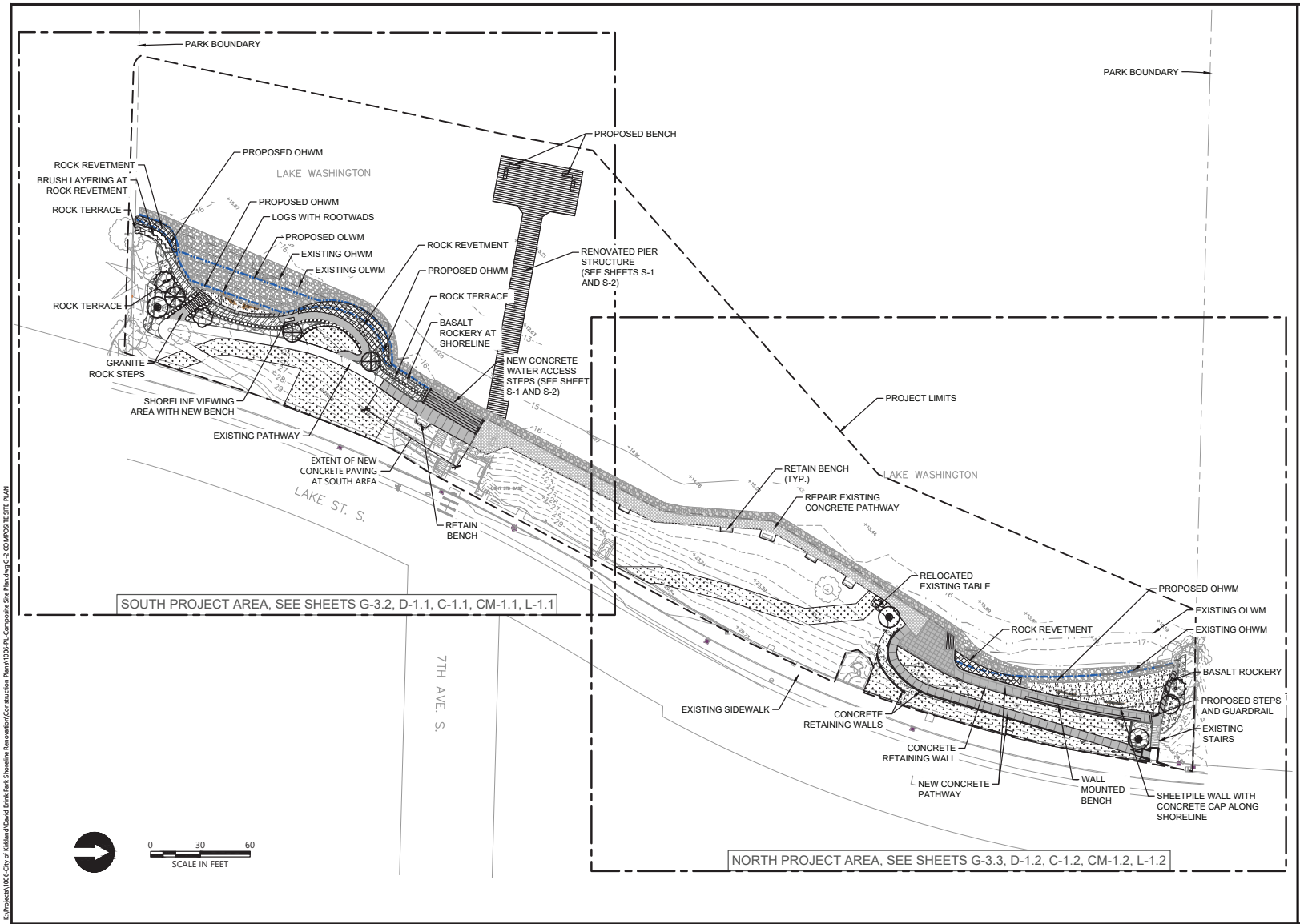

LEGEND:

- PARK BOUNDARY
- PROJECT LIMITS
- EXISTING CONTOUR
- EXISTING ORDINARY HIGH WATER MARK (OHWM)
- EXISTING ORDINARY LOW WATER MARK (OLWM)
- EXISTING TREE
- PROPOSED CONTOUR
- PROPOSED OHWM
- PROPOSED OLWM
- PROPOSED CONCRETE PATHWAY
- PROPOSED CONCRETE PATHWAY WITH DECORATIVE PAVING
- EXISTING CONCRETE PATHWAY SURFACE REPAIR AREA
- CONCRETE SEATWALL
- PIER GRATING
- BEACH SAND
- HABITAT GRAVEL
- COBBLE UNDERLAYMENT
- BASALT ROCKERY AT SHORELINE
- BASALT ROCK TERRACE (MAX 29" EXPOSED HEIGHT)
- ROCK REVETMENT (2:1 SLOPE MAX)
- BRUSH LAYERING AT ROCK REVETMENT
- NATIVE GROUNDCOVERS AND LOW SHRUBS - SHADE
- NATIVE GROUNDCOVERS AND LOW SHRUBS - SUN
- ORNAMENTAL GROUNDCOVERS AND PERENNIALS
- TREES
- LAWN RESTORATION AREA
- PROPOSED BENCH
- EXISTING BENCH TO REMAIN
- EXISTING PICNIC TABLE SALVAGED AND RELOCATED ON-SITE
- DRIFTWOOD WITH ROOTWADS
- DRIFTWOOD

NOTES:

1. HORIZONTAL DATUM: WASHINGTON STATE PLANE NORTH ZONE, NORTH AMERICAN DATUM OF 1983 (NAD83), U.S. SURVEY FEET
2. VERTICAL DATUM: NAVD 88
3. SURVEY PROVIDED BY STANTEC, INC IN MARCH 2019

ONE INCH
AT FULL SIZE, IF NOT ONE INCH SCALE ACCORDINGLY

SEPA SUBMITTAL
NOT FOR CONSTRUCTION

K:\Projects\006-City of Kirkland\David Brink Park Shoreline Renovation\Construction Plans\006-PL-Composite Site Plan.dwg G-2 (COMPOSITE SITE PLAN)

Mar 31, 2020, 11:42am dhewett

ANCHOR QEA

CITY OF KIRKLAND WASHINGTON

123 Fifth Ave
Kirkland, WA 98033
(425) 587-3300

REVISIONS				
REV	DATE	BY	APP'D	DESCRIPTION

DESIGNED BY: A. SPOONER
DRAWN BY: C. WEE/C. HEWETT
CHECKED BY: P. HUMMEL
APPROVED BY: P. HUMMEL
SCALE: AS SHOWN
DATE: MARCH 2020

DAVID E. BRINK PARK SHORELINE RENOVATION

COMPOSITE SITE PLAN

G-2

SHEET # 2 OF 27

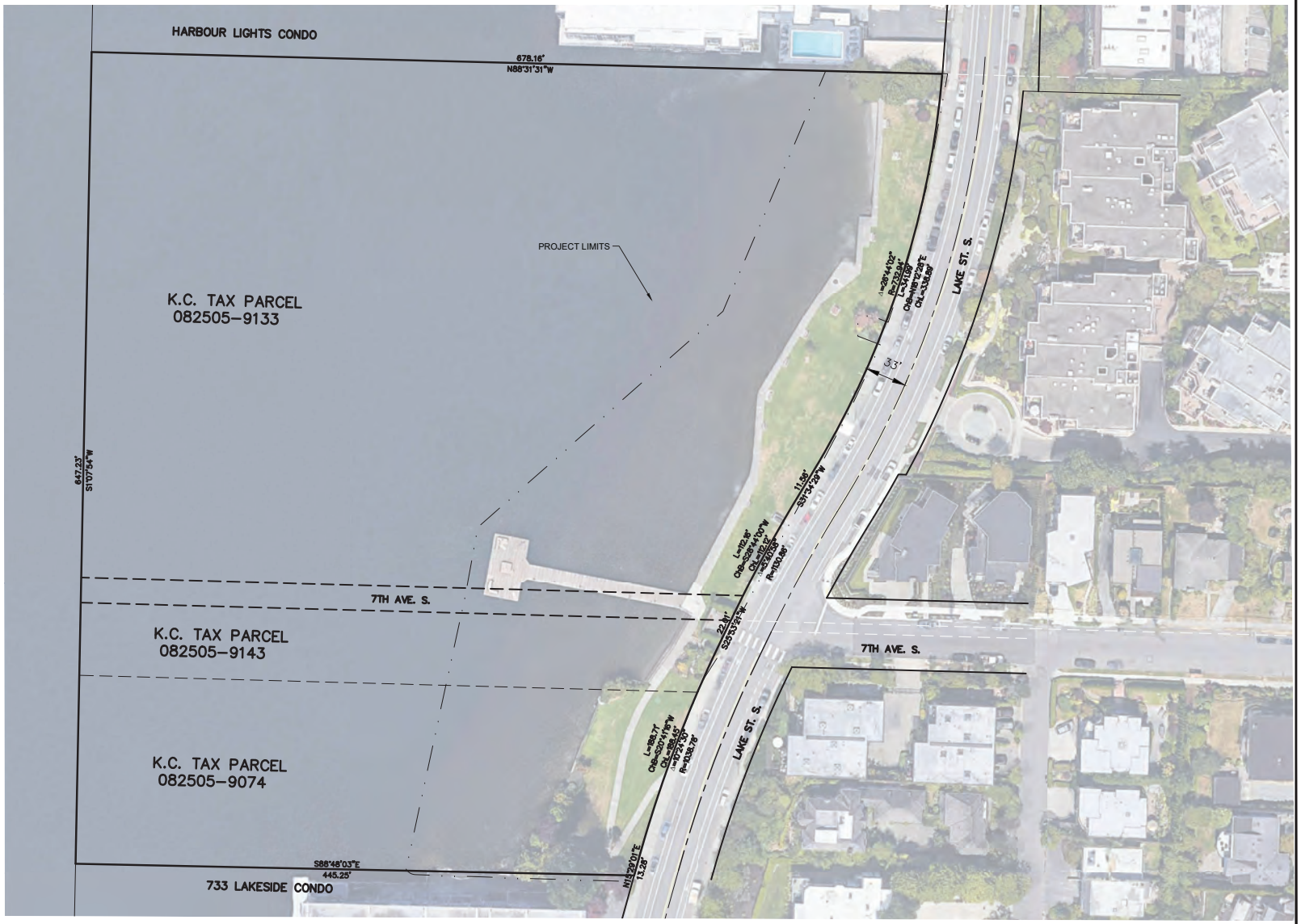

LEGEND:

- PARCEL BOUNDARY
- RIGHT OF WAY
- RIGHT OF WAY CENTERLINE
- PROJECT LIMITS

BOUNDARY SURVEY INFORMATION

NORTH AND SOUTH PROPERTY LINES DERIVED FROM BOUNDARY SURVEY TO REPRODUCE THE SOUTH LINE OF HARBOUR LIGHTS CONDO AND THE NORTH LINE OF 733 LAKESIDE CONDO. RECORD OF SURVEY TO BE RECORDED AT A LATER DATE DESCRIBING CONTROL AND FIT USED. RIGHT OF WAY OF LAKE STREET ACCEPTED MONUMENTATION FIT OF PREVIOUS SURVEYS TO THE EAST, NORTH OF 7TH AVE. S. AND ACCEPTED MONUMENTATION FIT OF RIGHT OF WAY PER WATER'S EDGE CONDO, SUNSET CONDO, AND 733 LAKESIDE CONDO. AREA SOUTH OF SUBJECT PROPERTY. AREA IN GREEN DID NOT FIT MONUMENTATION ACCEPTING THESE PAST SURVEYS. SURVEYOR FIT IN A SMALL TANGENT AND RADIUS SHOWN TO JOIN NORTH AND SOUTH PIECES TANGENT. RECOMMEND THIS SOLUTION BE USED FOR PARK PROPERTY ONLY (WEST OF CENTERLINE) AS PROPERTIES EAST OF CENTERLINE HAVE APPARENTLY USED DIFFERENT SOLUTIONS.

NOTES:

1. HORIZONTAL DATUM: WASHINGTON STATE PLANE NORTH ZONE, NORTH AMERICAN DATUM OF 1983 (NAD83), U.S. SURVEY FEET
2. VERTICAL DATUM: NAVD 88
3. SURVEY PROVIDED BY STANTEC, INC IN MARCH 2019

0 40 80
SCALE IN FEET

ONE INCH
AT FULL SIZE, IF NOT ONE INCH SCALE ACCORDINGLY

SEPA SUBMITTAL
NOT FOR CONSTRUCTION

K:\Projects\1006-City of Kirkland\David Brink Park Shoreline Renovation\Construction Plans\1006-PL-Existing.dwg G-3.1 BOUNDARY SURVEY

Mar 31, 2020, 11:42am dhewett

ANCHOR QEA

CITY OF KIRKLAND WASHINGTON

123 Fifth Ave
Kirkland, WA 98033
(425) 587-3300

REVISIONS				
REV	DATE	BY	APP'D	DESCRIPTION

DESIGNED BY: -
DRAWN BY: STANTEC
CHECKED BY: STANTEC
APPROVED BY: STANTEC
SCALE: AS SHOWN
DATE: MARCH 2019

DAVID E. BRINK PARK SHORELINE RENOVATION

BOUNDARY SURVEY

G-3.1

SHEET # 3 OF 27

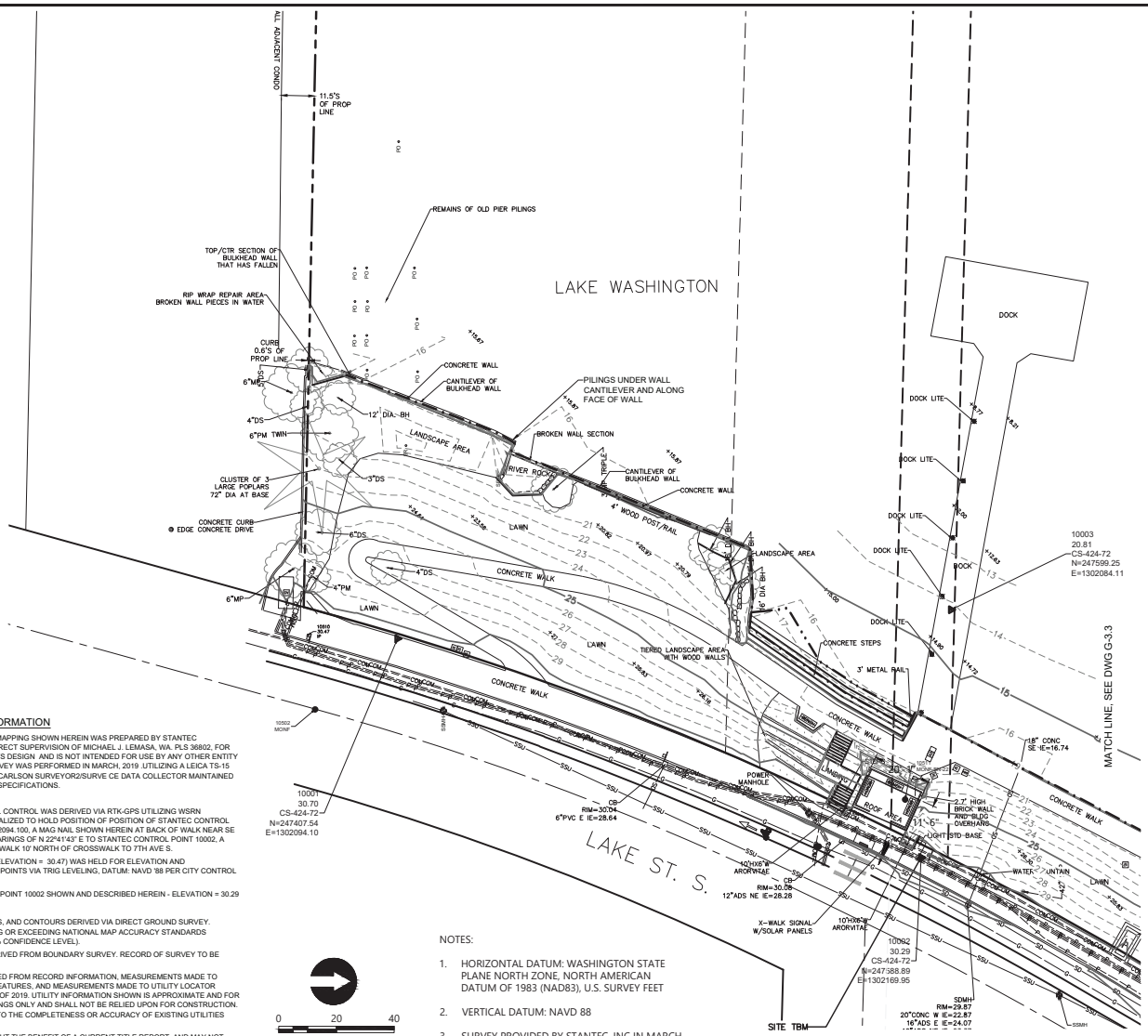

LEGEND

- APPROXIMATE OHWM
- APPROXIMATE OLWM
- CB CATCH BASIN
- SDMH STORM MANHOLE
- SDI STORM INVERT
- SSMH SANITARY MANHOLE
- PO POST (ALSO STATUE)
- WV WATER VALVE
- FH FIRE HYDRANT
- WM WATER METER
- GV GAS VALVE
- UP UTILITY POLE
- PO POST
- GB GARBAGE CONTAINER
- RS SIGN
- EDGE OF CONCRETE
- EDGE OF GRAVEL
- EDGE OF PAVEMENT
- FACE / BACK OF CURB
- X FENCE
- TOPOGRAPHY BREAKLINE
- SSU SANITARY SEWER
- SD STORMDRAIN
- G GAS LOCATES
- P POWER LOCATES
- W WATER LOCATES
- COM TELE-COMMUNICATION LOCATES
- ROCKERY
- HEDGE
- PWR POWER UTILITY BOX
- CV CONCRETE VAULT
- COM COMMUNICATION UTILITY BOX
- UB UTILITY BOX
- IC IRRIGATION CONTROL BOX
- TELE-COMMUNICATION PEDESTAL
- CROSS WALK CONTROL / LIGHT
- ROADWAY MONUMENT
- DS DECIDUOUS
- CF CONIFEROUS
- CW COTTONWOOD
- MP MAPLE
- PM PLUM
- PR POPLAR
- 26.41 SPOT ELEV
- BR BUSH
- SR SPRINKLER HEAD

TOPOGRAPHIC SURVEY INFORMATION

EXISTING TOPOGRAPHIC AND UTILITY MAPPING SHOWN HEREIN WAS PREPARED BY STANTEC CONSULTING SERVICES INC. UNDER DIRECT SUPERVISION OF MICHAEL J. LEMASA, WA. PLS 36802, FOR THE PURPOSE OF PARK IMPROVEMENTS DESIGN AND IS NOT INTENDED FOR USE BY ANY OTHER ENTITY FOR ANY OTHER PURPOSE. FIELD SURVEY WAS PERFORMED IN MARCH, 2019 .UTILIZING A LEICA TS-15 SERIES ROBOTIC TOTAL STATION AND CARLSON SURVEYOR2/SURVE CE DATA COLLECTOR MAINTAINED IN ADJUSTMENT TO MANUFACTURERS SPECIFICATIONS.

SURVEY CONTROL:

HORIZONTAL: NAD 83/2011 HORIZONTAL CONTROL WAS DERIVED VIA RTK-GPS UTILIZING WSRN REAL-TIME NETWORK SOLUTIONS LOCALIZED TO HOLD POSITION OF POSITION OF STANTEC CONTROL POINT 10001 E AS N=247407.537 E=11302094.100, A MAG NAIL SHOWN HEREIN AT BACK OF WALK NEAR SE CORNER OF PARK, AND A BASIS OF BEARINGS OF N 22°41'43" E TO STANTEC CONTROL POINT 10002, A MAG NAIL SHOWN HEREIN AT BACK OF WALK 10' NORTH OF CROSSWALK TO 7TH AVE S.

VERTICAL: C.O.K. CONTROL POINT 60 (ELEVATION = 30.47) WAS HELD FOR ELEVATION AND TRANSFERRED TO PROJECT CONTROL POINTS VIA TRIG LEVELING, DATUM: NAVD '88 PER CITY CONTROL DATABASE.

SITE BENCHMARK: STANTEC.CONTROL POINT 10002 SHOWN AND DESCRIBED HEREIN - ELEVATION = 30.29 NAVD '88

TOPOGRAPHIC FEATURES, ELEVATIONS, AND CONTOURS DERIVED VIA DIRECT GROUND SURVEY. CONTOUR INTERVAL IS 2 FEET MEETING OR EXCEEDING NATIONAL MAP ACCURACY STANDARDS (ONE-HALF CONTOUR INTERVAL AT 90% CONFIDENCE LEVEL).

RIGHT-OF-WAY AND PARCEL LINES DERIVED FROM BOUNDARY SURVEY. RECORD OF SURVEY TO BE RECORDED AT A LATER DATE.

UTILITY INFORMATION HEREIN COMPILED FROM RECORD INFORMATION, MEASUREMENTS MADE TO SURFACE-OBSERVED ABOVE-GRADE FEATURES, AND MEASUREMENTS MADE TO UTILITY LOCATOR MARKINGS SET BY APS, INC. IN MARCH OF 2019. UTILITY INFORMATION SHOWN IS APPROXIMATE AND FOR THE DEVELOPMENT OF DESIGN DRAWINGS ONLY AND SHALL NOT BE RELIED UPON FOR CONSTRUCTION. SURVEYOR MAKES NO WARRANTY AS TO THE COMPLETENESS OR ACCURACY OF EXISTING UTILITIES SHOWN ON THIS MAP.

THIS SURVEY WAS PERFORMED WITHOUT THE BENEFIT OF A CURRENT TITLE REPORT, AND MAY NOT SHOW ALL EASEMENTS AND ENCUMBRANCES OF RECORD.

NOTES:

1. HORIZONTAL DATUM: WASHINGTON STATE PLANE NORTH ZONE, NORTH AMERICAN DATUM OF 1983 (NAD83), U.S. SURVEY FEET
2. VERTICAL DATUM: NAVD 88
3. SURVEY PROVIDED BY STANTEC, INC IN MARCH 2019

SEPA SUBMITTAL
NOT FOR CONSTRUCTION

ONE INCH
AT FULL SIZE, IF NOT ONE INCH SCALE ACCORDINGLY

K:\Projects\1006-City of Kirkland\David Brink Park Shoreline Renovation\Construction Plans\006-PL-Existing.dwg G-3.1 EXISTING CONDITIONS PLAN

Mar 31, 2020, 11:42am dnewett

ANCHOR QEA

CITY OF KIRKLAND WASHINGTON

123 Fifth Ave
Kirkland, WA 98033
(425) 587-3300

REVISIONS				
REV	DATE	BY	APP'D	DESCRIPTION

DESIGNED BY: -
DRAWN BY: STANTEC
CHECKED BY: STANTEC
APPROVED BY: STANTEC
SCALE: AS SHOWN
DATE: MARCH 2019

DAVID E. BRINK PARK SHORELINE RENOVATION

EXISTING CONDITIONS PLAN - SOUTH

G-3.2

SHEET # 4 OF 27

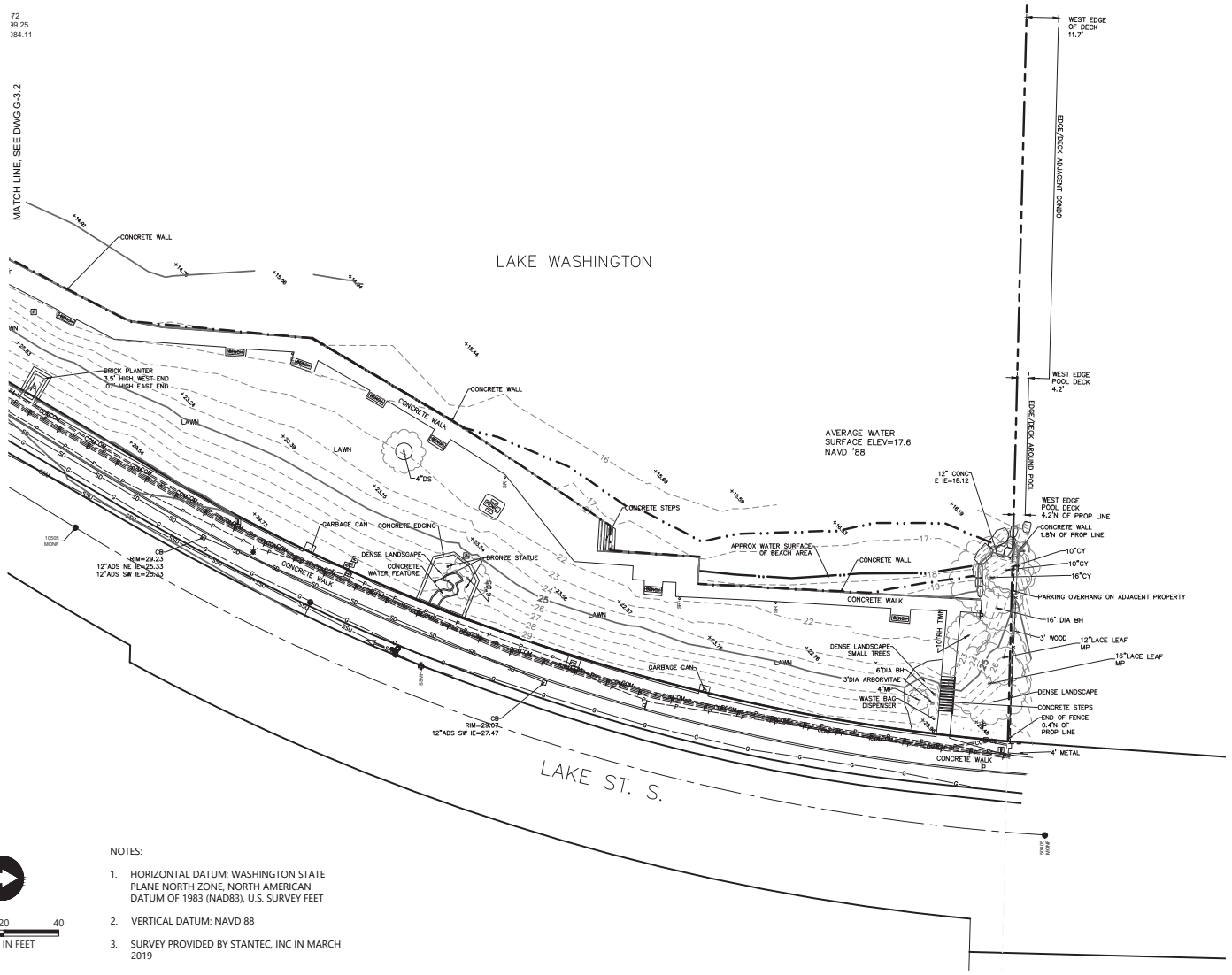

NOTES:

1. HORIZONTAL DATUM: WASHINGTON STATE PLANE NORTH ZONE, NORTH AMERICAN DATUM OF 1983 (NAD83), U.S. SURVEY FEET
2. VERTICAL DATUM: NAVD 88
3. SURVEY PROVIDED BY STANTEC, INC IN MARCH 2019
4. SEE SHEET G-3.2 FOR TOPOGRAPHIC SURVEY NOTES

0 20 40
SCALE IN FEET

LEGEND

- APPROXIMATE OHWM
- APPROXIMATE OLWM
- CB CATCH BASIN
- SDMH STORM MANHOLE
- SDI STORM INVERT
- SSMH SANITARY MANHOLE
- PO POST (ALSO STATUE)
- WV WATER VALVE
- FH FIRE HYDRANT
- WM WATER METER
- GV GAS VALVE
- UP UTILITY POLE
- PO POST
- GB GARBAGE CONTAINER
- RS SIGN
- EDGE OF CONCRETE
- EDGE OF GRAVEL
- EDGE OF PAVEMENT
- FACE / BACK OF CURB
- X FENCE
- TOPOGRAPHY BREAKLINE
- SSU SANITARY SEWER
- SD STORMDRAIN
- G GAS LOCATES
- P POWER LOCATES
- W WATER LOCATES
- COM TELE-COMMUNICATION LOCATES
- ROCKERY
- HEDGE
- PWR POWER UTILITY BOX
- CV CONCRETE VAULT
- COM COMMUNICATION UTILITY BOX
- UB UTILITY BOX
- IC IRRIGATION CONTROL BOX
- TELE-COMMUNICATION PEDESTAL
- CROSS WALK CONTROL / LIGHT
- ROADWAY MONUMENT
- DS DECIDUOUS
- CF CONIFEROUS
- CW COTTONWOOD
- MP MAPLE
- PM PLUM
- PR POPLAR
- 26.01 SPOT ELEV
- BR BUSH
- SR SPRINKLER HEAD

ONE INCH
AT FULL SIZE, IF NOT ONE INCH SCALE ACCORDINGLY

SEPA SUBMITTAL
NOT FOR CONSTRUCTION

ANCHOR QEA

CITY OF KIRKLAND WASHINGTON

123 Fifth Ave
Kirkland, WA 98033
(425) 587-3300

REVISIONS				
REV	DATE	BY	APP'D	DESCRIPTION

DESIGNED BY: -
DRAWN BY: STANTEC
CHECKED BY: STANTEC
APPROVED BY: STANTEC
SCALE: AS SHOWN
DATE: MARCH 2019

DAVID E. BRINK PARK SHORELINE RENOVATION

EXISTING CONDITIONS PLAN - NORTH

G-3.3

SHEET # 5 OF 27

K:\Projects\006-City of Kirkland\David Brink Park Shoreline Renovation\Construction Plans\006-PL-Existing.dwg G-3.3 EXISTING CONDITIONS PLAN

Mar 31, 2020, 11:42am dnewett

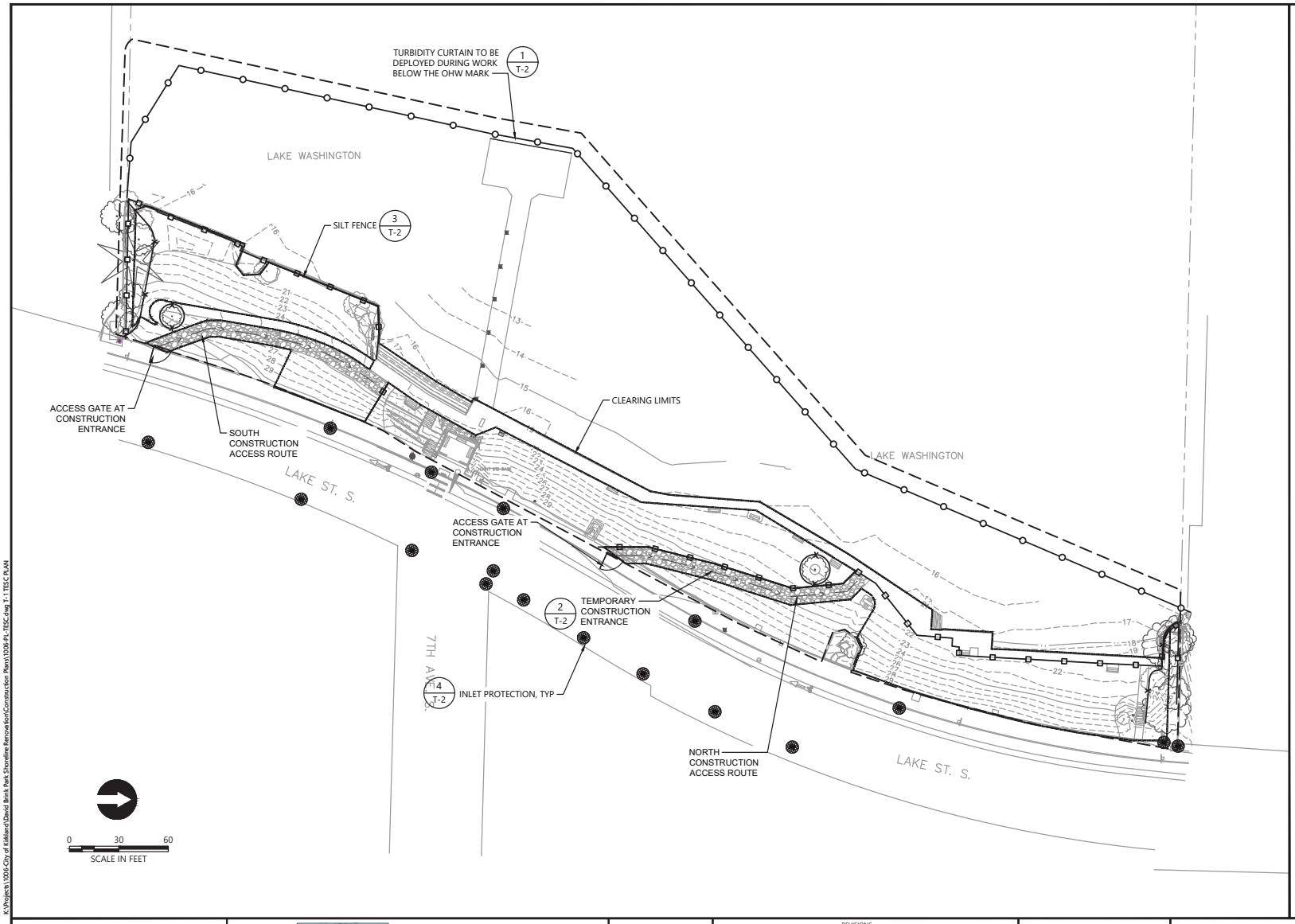

LEGEND:

- PARK BOUNDARY
- PROJECT LIMITS
- EXISTING CONTOUR
- EXISTING ORDINARY HIGH WATER MARK (OHWM)
- EXISTING ORDINARY LOW WATER MARK (OLWM)
- EXISTING ROCK BULKHEAD TO REMAIN
- PROTECT EXISTING TREES TO REMAIN
- TREE PROTECTION FENCING
- ACCESS GATE
- IN-WATER TURBIDITY CURTAIN (1 / T-2)
- CLEARING, GRADING, AND DISTURBANCE LIMITS
- TEMPORARY CONSTRUCTION ENTRANCE (2 / T-2)
- SILT FENCE (3 / T-2)
- INLET PROTECTION (4 / T-2)

NOTES:

1. HORIZONTAL DATUM: WASHINGTON STATE PLANE NORTH ZONE, NORTH AMERICAN DATUM OF 1983 (NAD83), U.S. SURVEY FEET
2. VERTICAL DATUM: NAVD 88
3. SURVEY PROVIDED BY STANTEC, INC IN MARCH 2019
4. SEE SHEET T-3 FOR TESC NOTES

ONE INCH
AT FULL SIZE, IF NOT ONE INCH SCALE ACCORDINGLY

SEPA SUBMITTAL
NOT FOR CONSTRUCTION

K:\Projects\1006-City of Kirkland\David Brink Park Shoreline Renovation\Construction Plans\1006-PL-TESC.dwg T-1 TESC PLAN

Mar 31, 2020, 11:42am dhewett

ANCHOR QEA

CITY OF KIRKLAND WASHINGTON

123 Fifth Ave
Kirkland, WA 98033
(425) 587-3300

REVISIONS

REV	DATE	BY	APP'D	DESCRIPTION

DESIGNED BY: J. SEXTON
DRAWN BY: C. WEE/C. HEWETT
CHECKED BY: P. HUMMEL
APPROVED BY: P. HUMMEL
SCALE: AS SHOWN
DATE: MARCH 2020

DAVID E. BRINK PARK SHORELINE RENOVATION

TEMPORARY EROSION AND STORMWATER CONTROL (TESC) PLAN

T-1

SHEET # 6 OF 27

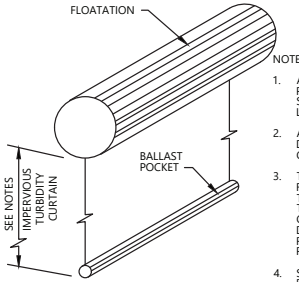

NOTES:

1. AROUND PILE DRIVING AREAS AND EXISTING PILE REMOVAL AREAS, LENGTH OF CURTAIN SHALL EXTEND TO MUDLINE FOR ALL TIDE LEVELS.
2. ALL OTHER AREAS, WHERE DEBRIS FROM DEMOLITION WORK MAY EXIST, LENGTH OF CURTAIN SHALL BE 6 FEET.
3. THE CONTRACTOR SHALL BE RESPONSIBLE FOR MAINTAINING THE TURBIDITY CURTAIN TO MAINTAIN FUNCTIONALITY OF THE TURBIDITY CURTAIN THROUGHOUT ALL TIDAL CONDITIONS AND WEATHER EXPECTED DURING THE CONSTRUCTION PERIOD, AS REQUIRED BY THE APPROVED PROJECT PERMITS.
4. SEE SPECIFICATIONS FOR MATERIAL REQUIREMENTS.

1 / T-1.1 IN-WATER TURBIDITY CURTAIN
SCALE: NOT TO SCALE

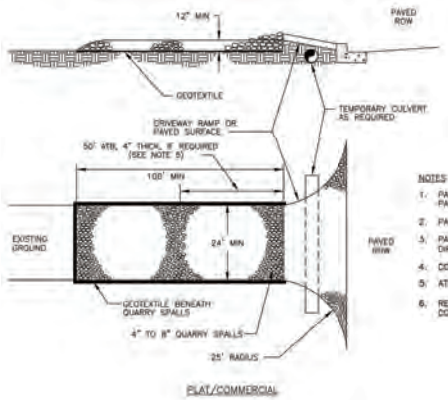

NOTES

1. PAD SHALL BE REMOVED AND REPLACED WHEN SOIL IS EVIDENT ON THE SURFACE OF THE PAD OR AS DIRECTED BY THE CITY CLEARING AND GRADING INSPECTOR.
2. PAD SHALL BE INSTALLED IN PLANTING STRIP AS APPROPRIATE.
3. PAD THICKNESS SHALL BE INCREASED IF SOIL CONDITIONS DICTATE AND/OR PER THE DIRECTION OF THE CITY CLEARING AND GRADING INSPECTOR.
4. CONTRACTOR RESPONSIBLE FOR CURB & GUTTER CONDITION.
5. ATB MAY BE REQUIRED PER PW INSPECTOR.
6. RECYCLED CONCRETE SHALL NOT BE USED FOR THE CONSTRUCTION ENTRANCE DUE TO HIGH LEVELS OF PH.

2 / T-1.1 CONSTRUCTION ENTRANCE
SCALE: NOT TO SCALE
SOURCE: CITY OF KIRKLAND PRE-APPROVED PLAN NO CK-E.02

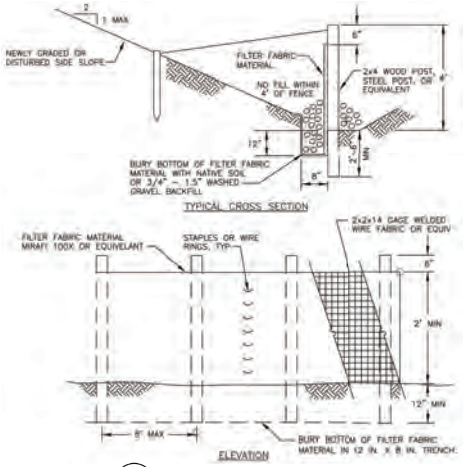

NOTES

1. PREFAB FENCE ALLOWED IF REINFORCED AND APPROVED BY CITY INSPECTOR.
2. FENCE SHALL NOT BE INSTALLED ON SLOPES STEEPER THAN 2:1.
3. JOINTS IN FILTER FABRIC SHALL BE OVERLAPPED 6 INCHES AT POST.
4. USE STAPLES, WIRE RINGS, OR EQUIVALENT TO ATTACH FABRIC TO FENCE.
5. REMOVE SEDIMENT WHEN IT REACHES 1/3 FENCE HEIGHT.
6. LOCATION OF FENCING SHALL BE AS SHOWN ON APPROVED PLANS OR AS DIRECTED BY THE CITY.
7. MAXIMUM 100' SHEET OR OVERLAND FLOW PATH LENGTH TO SILT FENCE.
8. DO NOT DIRECT FLOWS GREATER THAN 0.5 CFS TO FENCE.
9. SILT FENCE SHOULD NOT BE INSTALLED IN STREAMS OR V-SHAPED DITCHES.

3 / T-1.1 SILT FENCE
SCALE: NOT TO SCALE
SOURCE: CITY OF KIRKLAND PRE-APPROVED PLAN NO CK-E.03

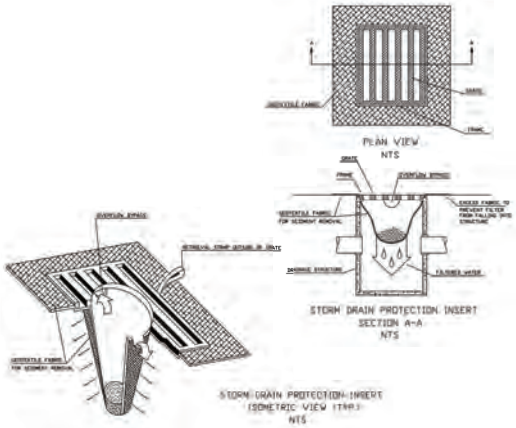

4 / T-1.1 INLET PROTECTION
SCALE: NOT TO SCALE
SOURCE: CITY OF KIRKLAND PRE-APPROVED PLAN NO CK-E.11

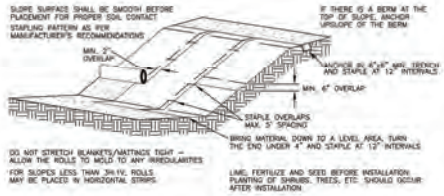

NET & BLANKET INSTALLATION

NOT TO SCALE

NOTES:

1. IF BLANKET IS NOT LONG ENOUGH TO COVER THE ENTIRE SLOPE LENGTH, THE TRAILING EDGE OF THE UPPER BLANKET SHOULD OVERLAP THE LEADING EDGE OF THE LOWER BLANKET AND BE STAPLED.
2. MULCH IS REQUIRED FOR NETS, AND NOT REQUIRED FOR BLANKETS.
3. USE 100% BIODEGRADABLE BLANKETS IN SENSITIVE AREAS.
4. MAINTAIN GOOD CONTACT WITH THE GROUND. EROSION MUST NOT OCCUR BENEATH THE BLANKET.
5. INSPECT NETS AND BLANKETS AFTER EACH SIGNIFICANT STORM; MAINTAIN AND REPAIR PROMPTLY.

5 / T-1.1 TEMPORARY NETS AND BLANKETS
SCALE: NOT TO SCALE
SOURCE: CITY OF KIRKLAND PRE-APPROVED PLAN NO CK-E.06

ONE INCH
AT FULL SIZE, IF NOT ONE INCH SCALE ACCORDINGLY

SEPA SUBMITTAL
NOT FOR CONSTRUCTION

K:\Projects\1006-City of Kirkland\David Brink Park Shoreline Renovation\Construction Plans\ADAPT\TESC Notes and Details.dwg T-2 TESC NOTES\VAULT\BEFAAL S

Mar 31, 2020, 11:44am dhewett

ANCHOR QEA

CITY OF KIRKLAND WASHINGTON
123 Fifth Ave
Kirkland, WA 98033
(425) 587-3300

REVISIONS				
REV	DATE	BY	APP'D	DESCRIPTION

DESIGNED BY: J. SEXTON
DRAWN BY: C. WEE/C. HEWETT
CHECKED BY: P. HUMMEL
APPROVED BY: P. HUMMEL
SCALE: AS SHOWN
DATE: MARCH 2020

DAVID E. BRINK PARK SHORELINE RENOVATION

TESC DETAILS

T-2

SHEET NO. 7 OF 27

CITY OF KIRKLAND STANDARD EROSION/SEDIMENTATION CONTROL - PLAN NOTES

1. THE APPROVED CONSTRUCTION SEQUENCE SHALL BE AS FOLLOWS:

A. CONDUCT PRE-CONSTRUCTION MEETING.
B. FLAG OR FENCE CLEARING LIMITS.
C. POST SIGN WITH NAME AND PHONE NUMBER OF TESC SUPERVISOR.
D. INSTALL CATCH BASIN PROTECTION IF REQUIRED.
E. GRADE AND INSTALL CONSTRUCTION ENTRANCE(S).
F. INSTALL PERIMETER PROTECTION (SILT FENCE, BRUSH BARRIER, ETC.).
G. CONSTRUCT SEDIMENT PONDS AND TRAPS.
H. GRADE AND STABILIZE CONSTRUCTION ROADS.
I. CONSTRUCT SURFACE WATER CONTROLS (INTERCEPTOR DIKES, PIPE SLOPE DRAINS, ETC.) SIMULTANEOUSLY WITH CLEARING AND GRADING FOR PROJECT DEVELOPMENT.
J. MAINTAIN EROSION CONTROL MEASURE IN ACCORDANCE WITH CITY OF KIRKLAND STANDARDS AND MANUFACTURER'S RECOMMENDATIONS.
K. RELOCATE EROSION CONTROL MEASURES OR INSTALL NEW MEASURES SO THAT AS SITE CONDITIONS CHANGE, THE EROSION AND SEDIMENT CONTROL IS ALWAYS IN ACCORDANCE WITH THE CITY TESC MINIMUM REQUIREMENTS.
L. COVER ALL AREAS WITHIN THE SPECIFIED TIME FRAME WITH STRAW, WOOD FIBER MULCH, COMPOST, PLASTIC SHEETING, CRUSHED ROCK OR EQUIVALENT.
M. STABILIZE ALL AREAS THAT REACH FINAL GRADE WITHIN 7 DAYS.
N. SEED OR SOD ANY AREAS TO REMAIN UNWORKED FOR MORE THAN 30 DAYS.
O. UPON COMPLETION OF THE PROJECT, ALL DISTURBED AREAS MUST BE STABILIZED AND BEST MANAGEMENT PRACTICES REMOVED IF APPROPRIATE.

2. ALL WORK AND MATERIALS SHALL BE IN ACCORDANCE WITH CITY OF KIRKLAND STANDARDS AND SPECIFICATIONS.

3. THE BOUNDARIES OF THE CLEARING LIMITS SHOWN ON THIS PLAN SHALL BE SET BY SURVEY AND CLEARLY FLAGGED IN THE FIELD BY A CLEARING CONTROL FENCE PRIOR TO CONSTRUCTION. DURING THE CONSTRUCTION PERIOD, NO DISTURBANCE OR REMOVAL OF ANY GROUND COVER BEYOND THE FLAGGED CLEARING LIMITS SHALL BE PERMITTED. THE FLAGGING SHALL BE MAINTAINED BY THE PERMITTEE/CONTRACTOR FOR THE DURATION OF CONSTRUCTION.

4. APPROVAL OF THIS EROSION/SEDIMENTATION CONTROL (ESC) PLAN DOES NOT CONSTITUTE AN APPROVAL OF PERMANENT ROAD OR DRAINAGE DESIGN (E.G., SIZE AND LOCATION OF ROADS, PIPES, RESTRICTORS, CHANNELS, RETENTION FACILITIES, UTILITIES, ETC.).

5. THE IMPLEMENTATION OF THIS ESC PLAN AND THE CONSTRUCTION, MAINTENANCE, REPLACEMENT, AND UPGRADING OF THESE ESC FACILITIES IS THE RESPONSIBILITY OF THE PERMITTEE/CONTRACTOR UNTIL ALL CONSTRUCTION IS APPROVED.

6. A COPY OF THE APPROVED ESC PLANS MUST BE ON THE JOB SITE WHENEVER CONSTRUCTION IS IN PROGRESS.

7. THE ESC FACILITIES SHOWN ON THIS PLAN MUST BE CONSTRUCTED PRIOR TO OR IN CONJUNCTION WITH ALL CLEARING AND GRADING ACTIVITIES IN SUCH A MANNER AS TO ENSURE THAT SEDIMENT-LADEN WATER DOES NOT ENTER THE DRAINAGE SYSTEM OR VIOLATE APPLICABLE WATER STANDARDS.WHEREVER POSSIBLE, MAINTAIN NATURAL VEGETATION FOR SILT CONTROL.

8. THE ESC FACILITIES SHALL BE CONSTRUCTED IN ACCORDANCE WITH THE DETAILS ON THE APPROVED PLANS. LOCATIONS MAY BE MOVED TO SUIT FIELD CONDITIONS, SUBJECT TO APPROVAL BY THE ENGINEER AND THE CITY OF KIRKLAND INSPECTOR.

9. THE ESC FACILITIES SHOWN ON THIS PLAN ARE THE MINIMUM REQUIREMENTS FOR ANTICIPATED SITE CONDITIONS. DURING THE CONSTRUCTION PERIOD, THESE ESC FACILITIES SHALL BE UPGRADED (E.G., ADDITIONAL SUMPS, RELOCATION OF DITCHES AND SILT FENCES, ETC.) AS NEEDED FOR UNEXPECTED STORM EVENTS. ADDITIONALLY, MORE ESC FACILITIES MAY BE REQUIRED TO ENSURE COMPLETE SILTATION CONTROL. THEREFORE, DURING THE COURSE OF CONSTRUCTION IT SHALL BE THE OBLIGATION AND RESPONSIBILITY OF THE CONTRACTOR TO ADDRESS ANY NEW CONDITIONS THAT MAY BE CREATED BY HIS ACTIVITIES AND TO PROVIDE ADDITIONAL FACILITIES OVER AND ABOVE THE MINIMUM REQUIREMENTS AS MAY BE NEEDED.

10. THE ESC FACILITIES SHALL BE INSPECTED BY THE PERMITTEE/CONTRACTOR DAILY DURING NON-RAINFALL PERIODS, EVERY HOUR (DAYLIGHT) DURING A RAINFALL EVENT, AND AT THE END OF EVERY RAINFALL, AND MAINTAINED AS NECESSARY TO ENSURE THEIR CONTINUED FUNCTIONING. IN ADDITION, TEMPORARY SILTATION PONDS AND ALL TEMPORARY SILTATION CONTROLS SHALL BE MAINTAINED IN A SATISFACTORY CONDITION UNTIL SUCH TIME THAT CLEARING AND/OR CONSTRUCTION IS COMPLETED, PERMANENT DRAINAGE FACILITIES ARE OPERATIONAL, AND THE POTENTIAL FOR EROSION HAS PASSED. WRITTEN RECORDS SHALL BE KEPT DOCUMENTING THE REVIEWS OF THE ESC FACILITIES.

11. THE ESC FACILITIES ON INACTIVE SITES SHALL BE INSPECTED AND MAINTAINED A MINIMUM OF ONCE A MONTH OR WITHIN 48 HOURS FOLLOWING A STORM EVENT.

12. STABILIZED CONSTRUCTION ENTRANCES SHALL BE INSTALLED AT THE BEGINNING OF CONSTRUCTION AND MAINTAINED FOR THE DURATION OF THE PROJECT. ADDITIONAL MEASURES, SUCH AS WASH PADS, MAY BE REQUIRED TO ENSURE THAT ALL PAVED AREAS ARE KEPT CLEAN FOR THE DURATION OF THE PROJECT.

13. ALL DENUDED SOILS MUST BE STABILIZED WITH AN APPROVED TESC METHOD (E.G. SEEDING, MULCHING, PLASTIC COVERING, CRUSHED ROCK) WITHIN THE FOLLOWING TIMELINES:

- MAY 1 TO SEPTEMBER 30 – SOILS MUST BE STABILIZED WITHIN 7 DAYS OF GRADING.
- OCTOBER 1 TO APRIL 30 – SOILS MUST BE STABILIZED WITHIN 2 DAYS OF GRADING.
- STABILIZE SOILS AT THE END OF THE WORKDAY PRIOR TO A WEEKEND, HOLIDAY, OR PREDICTED RAIN EVENT.

14. WHERE SEEDING FOR TEMPORARY EROSION CONTROL IS REQUIRED, FAST GERMINATING GRASSES SHALL BE APPLIED AT AN APPROPRIATE RATE (EXAMPLE: ANNUAL OR PERENNIAL RYE APPLIED AT APPROXIMATELY 80 POUNDS PER ACRE).

15. WHERE STRAW MULCH IS REQUIRED FOR TEMPORARY EROSION CONTROL, IT SHALL BE APPLIED AT A MINIMUM THICKNESS OF 2".

16. ALL LOTS ADJOINING OR HAVING ANY NATIVE GROWTH PROTECTION EASEMENTS (NGPE) SHALL HAVE A 6' HIGH TEMPORARY CONSTRUCTION FENCE (CHAIN LINK WITH PIER BLOCKS) SEPARATING THE LOT (OR BUILDABLE PORTIONS OF THE LOT) FROM THE AREA RESTRICTED BY THE NGPE AND SHALL BE INSTALLED PRIOR TO ANY GRADING OR CLEARING AND REMAIN IN PLACE UNTIL THE PLANNING DEPARTMENT AUTHORIZES REMOVAL.

17. CLEARING LIMITS SHALL BE DELINEATED WITH A CLEARING CONTROL FENCE. THE CLEARING CONTROL FENCE SHALL CONSIST OF A 6-FT. HIGH CHAIN LINK FENCE ADJACENT THE DRIP LINE OF TREES TO BE SAVED, WETLAND OR STREAM BUFFERS, AND SENSITIVE SLOPES. CLEARING CONTROL FENCES ALONG WETLAND OR STREAM BUFFERS OR UPSLOPE OF SENSITIVE SLOPES SHALL BE ACCOMPANIED BY AN EROSION CONTROL FENCE. IF APPROVED BY THE CITY, A FOUR-FOOT HIGH ORANGE MESH CLEARING CONTROL FENCE MAY BE USED TO DELINEATE CLEARING LIMITS IN ALL OTHER AREAS.

18. OFF-SITE STREETS MUST BE KEPT CLEAN AT ALL TIMES. IF DIRT IS DEPOSITED ON THE PUBLIC STREET SYSTEM, THE STREET SHALL BE IMMEDIATELY CLEANED WITH POWER SWEEPER OR OTHER EQUIPMENT. ALL VEHICLES SHALL LEAVE THE SITE BY WAY OF THE CONSTRUCTION ENTRANCE AND SHALL BE CLEANED OF ALL DIRT THAT WOULD BE DEPOSITED ON THE PUBLIC STREETS.

19. ROCK FOR EROSION PROTECTION OF ROADWAY DITCHES, WHERE REQUIRED, MUST BE OF SOUND QUARRY ROCK, PLACED TO A DEPTH OF 1' AND MUST MEET THE FOLLOWING SPECIFICATIONS:

- 4"-8" ROCK/40%-70% PASSING
- 2"-4" ROCK/30%-40% PASSING
- 1"-2" ROCK/10%-20% PASSING
- RECYCLED CONCRETE SHALL NOT BE USED FOR CONSTRUCTION ENTRANCE OR TEMPORARY STABILIZATION ELSEWHERE ON THE SITE.

20. IF ANY PART(S) OF THE CLEARING LIMIT BOUNDARY OR TEMPORARY EROSION/SEDIMENTATION CONTROL PLAN IS/ARE DAMAGED, IT SHALL BE REPAIRED IMMEDIATELY.

21. ALL PROPERTIES ADJACENT TO THE PROJECT SITE SHALL BE PROTECTED FROM SEDIMENT DEPOSITION AND RUNOFF.

22. AT NO TIME SHALL MORE THAN 1' OF SEDIMENT BE ALLOWED TO ACCUMULATE WITHIN A CATCH BASIN. ALL CATCH BASINS AND CONVEYANCE LINES SHALL BE CLEANED PRIOR TO PAVING. THE CLEANING OPERATION SHALL NOT FLUSH SEDIMENT-LADEN WATER INTO THE DOWNSTREAM SYSTEM.

23. ANY PERMANENT RETENTION/DETENTION FACILITY USED AS A TEMPORARY SETTLING BASIN SHALL BE MODIFIED WITH THE NECESSARY EROSION CONTROL MEASURES AND SHALL PROVIDE ADEQUATE STORAGE CAPACITY. IF THE PERMANENT FACILITY IS TO FUNCTION ULTIMATELY AS AN INFILTRATION OR DISPERSION SYSTEM, THE FACILITY SHALL NOT BE USED AS A TEMPORARY SETTLING BASIN. NO UNDERGROUND DETENTION TANK, DETENTION VAULT, OR SYSTEM WHICH BACKS UNDER OR INTO A POND SHALL BE USED AS A TEMPORARY SETTLING BASIN.

24. ALL EROSION/SEDIMENTATION CONTROL PONDS WITH A DEAD STORAGE DEPTH EXCEEDING 6" MUST HAVE A PERIMETER FENCE WITH A MINIMUM HEIGHT OF 3'.

25. THE WASHED GRAVEL BACKFILL ADJACENT TO THE FILTER FABRIC FENCE SHALL BE REPLACED AND THE FILTER FABRIC CLEANED IF IT IS NONFUNCTIONAL BY EXCESSIVE SILT ACCUMULATION AS DETERMINED BY THE CITY OF KIRKLAND. ALSO, ALL INTERCEPTOR SWALES SHALL BE CLEANED IF SILT ACCUMULATION EXCEEDS ONE-QUARTER DEPTH.

26. PRIOR TO THE OCTOBER 1 OF EACH YEAR (THE BEGINNING OF THE WET SEASON), ALL DISTURBED AREAS SHALL BE REVIEWED TO IDENTIFY WHICH ONES CAN BE SEEDED IN PREPARATION FOR THE WINTER RAINS. THE IDENTIFIED DISTURBED AREA SHALL BE SEEDED WITHIN ONE WEEK AFTER OCTOBER 1. A SITE PLAN DEPICTING THE AREAS TO BE SEEDED AND THE AREAS TO REMAIN UNCOVERED SHALL BE SUBMITTED TO THE PUBLIC WORKS CONSTRUCTION INSPECTOR. THE INSPECTOR CAN REQUIRE SEEDING OF ADDITIONAL AREAS IN ORDER TO PROTECT SURFACE WATERS, ADJACENT PROPERTIES, OR DRAINAGE FACILITIES.

27. ANY AREA TO BE USED FOR INFILTRATION OR PERVIOUS PAVEMENT (INCLUDING A 5-FOOT BUFFER) MUST BE SURROUNDED BY SILT FENCE PRIOR TO CONSTRUCTION AND UNTIL FINAL STABILIZATION OF THE SITE TO PREVENT SOIL COMPACTION AND SILTATION BY CONSTRUCTION ACTIVITIES.

28. IF THE TEMPORARY CONSTRUCTION ENTRANCE IS LOCATED IN THE SAME AREA TO BE USED FOR INFILTRATION OR PERVIOUS PAVEMENT, 6" OF SEDIMENT BELOW THE GRAVEL CONSTRUCTION ENTRANCE SHALL BE REMOVED PRIOR TO INSTALLATION OF THE INFILTRATION FACILITY OR PERVIOUS PAVEMENT (TO REMOVE FINES ACCUMULATED DURING CONSTRUCTION).

29. ANY CATCH BASINS COLLECTING RUNOFF FROM THE SITE, WHETHER THEY ARE ON OR OFF THE SITE, SHALL HAVE ADEQUATE PROTECTION FROM SEDIMENT. CATCH BASINS DIRECTLY DOWNSTREAM OF THE CONSTRUCTION ENTRANCE OR ANY OTHER CATCH BASIN AS DETERMINED BY THE CITY INSPECTOR SHALL BE PROTECTED WITH A "STORM DRAIN PROTECTION INSERT" OR EQUIVALENT.

30. IF A SEDIMENT POND IS NOT PROPOSED, A BAKER TANK OR OTHER TEMPORARY GROUND AND/OR SURFACE WATER STORAGE TANK MAY BE REQUIRED DURING CONSTRUCTION, DEPENDING ON WEATHER CONDITIONS.

31. DO NOT FLUSH CONCRETE BY-PRODUCTS OR TRUCKS NEAR OR INTO THE STORM DRAINAGE SYSTEM. IF EXPOSED AGGREGATE IS FLUSHED INTO THE STORM SYSTEM, IT COULD MEAN RE-CLEANING THE ENTIRE DOWNSTREAM STORM SYSTEM, OR POSSIBLY RE-LAYING THE STORM LINE.

32. CONSTRUCTION DEWATERING DISCHARGES SHALL ALWAYS MEET WATER QUALITY GUIDELINES LISTED IN COK POLICY E-1. SPECIFICALLY, DISCHARGES TO THE PUBLIC STORMWATER DRAINAGE SYSTEM MUST BE BELOW 25NTU, AND NOT CONSIDERED A PROHIBITED DISCHARGE (PER KMC 15.52.090). TEMPORARY DISCHARGES TO SANITARY SEWER REQUIRE PRIOR AUTHORIZATION AND PERMIT FROM KING COUNTY INDUSTRIAL WASTE PROGRAM (206-263-3000) AND NOTIFICATION TO THE PUBLIC WORKS CONSTRUCTION INSPECTOR.

PROJECT SPECIFIC TESC NOTES:

1. THE TESC PLAN DRAWINGS SHOWN ARE CONCEPTUAL. THE CONTRACTOR SHALL BE REQUIRED TO SUBMIT DETAILED TESC PLANS, INCLUDING ANY RECOMMENDED ALTERNATIVE BEST MANAGEMENT PRACTICES (BMPS) FOR APPROVAL BY THE OWNER PRIOR TO CONSTRUCTION. THE CONTRACTOR'S TESC PLAN SHALL COMPLY WITH THE CONSTRUCTION STORMWATER PERMIT REQUIREMENTS FOR THE PROJECT, THE APPROVED CONSTRUCTION STORMWATER POLLUTION PREVENTION PLAN (SWPPP), AND THE SPECIFICATIONS.
2. THIS TESC PLAN SPECIFICALLY ADDRESSES WORK ABOVE THE ORDINARY HIGH WATER LINE. WORK TO BE UNDERTAKEN BELOW THE ORDINARY HIGH WATER LINE SHALL COMPLY WITH APPLICABLE PERMITS.

ONE INCH
AT FULL SIZE, IF NOT ONE INCH SCALE ACCORDINGLY

SEPA SUBMITTAL
NOT FOR CONSTRUCTION

K:\Projects\1006-City of Kirkland\David Brink Park Shoreline Renovation\Construction Plans\ADAPT\TESC Notes and Details.dwg T-3 TESC NOTES
Mar 31, 2020, 11:44am chewett

ANCHOR QEA

CITY OF KIRKLAND WASHINGTON
123 Fifth Ave
Kirkland, WA 98033
(425) 587-3300

REVISIONS

REV	DATE	BY	APP'D	DESCRIPTION

DESIGNED BY: J. SEXTON
DRAWN BY: C. WEE/C. HEWETT
CHECKED BY: P. HUMMEL
APPROVED BY: P. HUMMEL
SCALE: AS SHOWN
DATE: MARCH 2020

DAVID E. BRINK PARK SHORELINE RENOVATION

TESC NOTES

T-3

SHEET NO. 8 OF 27

DEMOLITION NOTES:

1. PREPARE CONCRETE PAVING FOR REPAIR PER SPECIFICATIONS
2. PROTECT EXISTING STEPS
3. RETAIN EXISTING SITE FURNISHINGS
4. SALVAGE PICNIC TABLE FOR ON-SITE RELOCATION
5. REMOVE IN-WATER DEBRIS (PILE STUBS AND RIPRAP)
6. REMOVE RIPRAP AND QUARRY SPALL
7. REMOVE CONCRETE STAIRS/ STEPPED CONCRETE BULKHEAD
8. REMOVE EXISTING PIER LADDERS (2) AND PIER LIGHTINGS AND SALVAGE FOR RE-INSTALLATION AFTER PIER RENOVATION. REMOVE AND DISPOSE OF EXISTING CUSTOM BENCHES AT PIER TERMINUS
9. PROTECT EXISTING STEPS, TERRACING, BUILDING AND ASSOCIATED LANDSCAPING
10. REMOVE SIGN AND SALVAGE FOR RE-USE ON-SITE (NEW LOCATION AT DIRECTION OF OWNER)
11. REMOVE EXISTING ROCKERY AND SALVAGE OWNER-APPROVED ROCK FOR RE-USE
12. PROTECT EXISTING PATHWAY-USE STEEL PLATES OR TIMBER MATS AT CROSSINGS

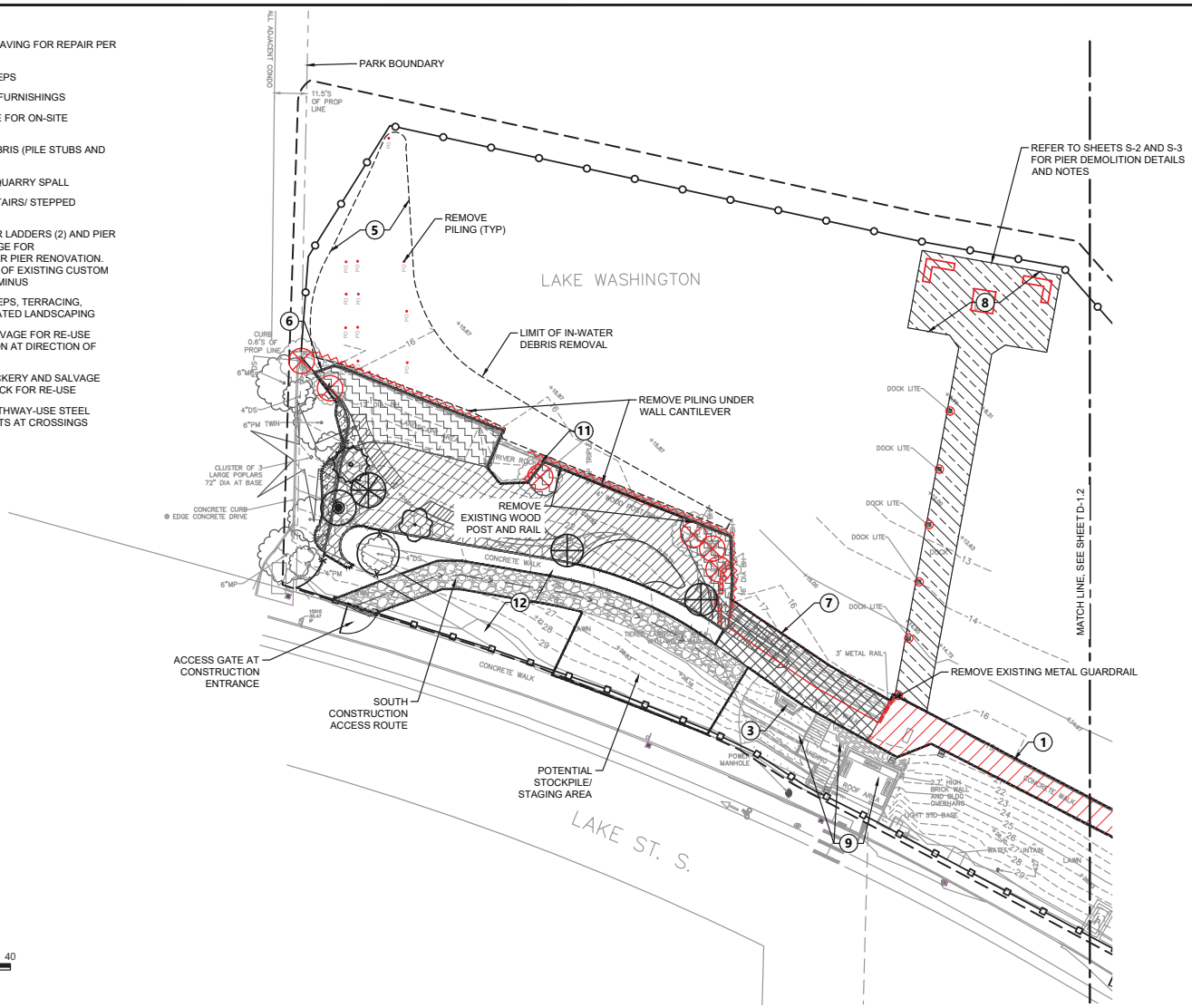

LEGEND:

- PARK BOUNDARY
- PROJECT LIMITS
- EXISTING CONTOUR
- EXISTING ORDINARY HIGH WATER MARK (OHWM)
- EXISTING ORDINARY LOW WATER MARK (OLWM)
- EXISTING ROCK BULKHEAD TO REMAIN
- PROTECT EXISTING TREES TO REMAIN
- TREE PROTECTION FENCING
- TEMPORARY CONSTRUCTION FENCING
- ACCESS GATE
- IN-WATER TURBIDITY CURTAIN
- REMOVE EXISTING TREE
- REMOVE EXISTING SITE FEATURE
- REMOVE AND SALVAGE EXISTING ROCKERY STONE
- REMOVE EXISTING CONCRETE PANEL BULKHEAD
- REMOVE SOLDIER PILE CONCRETE BULKHEAD
- REMOVE PIER DECKING
- REMOVE CONCRETE PAVING
- CONCRETE PAVING REPAIR (SEE DEMOLITION NOTE 1)
- REMOVE 4' WOOD POST AND RAIL
- REMOVE 3' METAL GUARDRAIL
- REMOVE DOCK LIGHT AND SALVAGE FOR RE-INSTALLATION AFTER PIER RENOVATION
- STRIP SOD TO 4" DEPTH
- CLEAR AND GRUB
- SELECTIVELY CLEAR AND GRUB SHRUBS AND LAWN AREA - PROTECT EXISTING TREES
- CONSTRUCTION ACCESS ROUTE
- IN-WATER DEBRIS REMOVAL AREA
- UPLAND CLEARING AND GRADING LIMITS

NOTES:

1. HORIZONTAL DATUM: WASHINGTON STATE PLANE NORTH ZONE, NORTH AMERICAN DATUM OF 1983 (NAD83), U.S. SURVEY FEET
2. VERTICAL DATUM: NAVD 88
3. SURVEY PROVIDED BY STANTEC, INC IN MARCH 2019

ONE INCH
AT FULL SIZE, IF NOT ONE INCH SCALE ACCORDINGLY

SEPA SUBMITTAL
NOT FOR CONSTRUCTION

ANCHOR QEA

CITY OF KIRKLAND WASHINGTON

123 Fifth Ave
Kirkland, WA 98033
(425) 587-3300

REVISIONS

REV	DATE	BY	APP'D	DESCRIPTION

DESIGNED BY: A. SPOONER
DRAWN BY: C. WEE
CHECKED BY: P. HUMMEL
APPROVED BY: P. HUMMEL
SCALE: AS SHOWN
DATE: NOVEMBER 2019

DAVID E. BRINK PARK SHORELINE RENOVATION

CLEARING AND DEMOLITION PLAN - SOUTH

D-1.1

SHEET # 9 OF 27

K:\Projects\006-City of Kirkland\David Brink Park Shoreline Renovation\Construction Plans\006-PL-Demo Plan.dwg D-1.1 CLEARING AND DEMOLITION PLAN

Mar 31, 2020, 11:45am dhewett

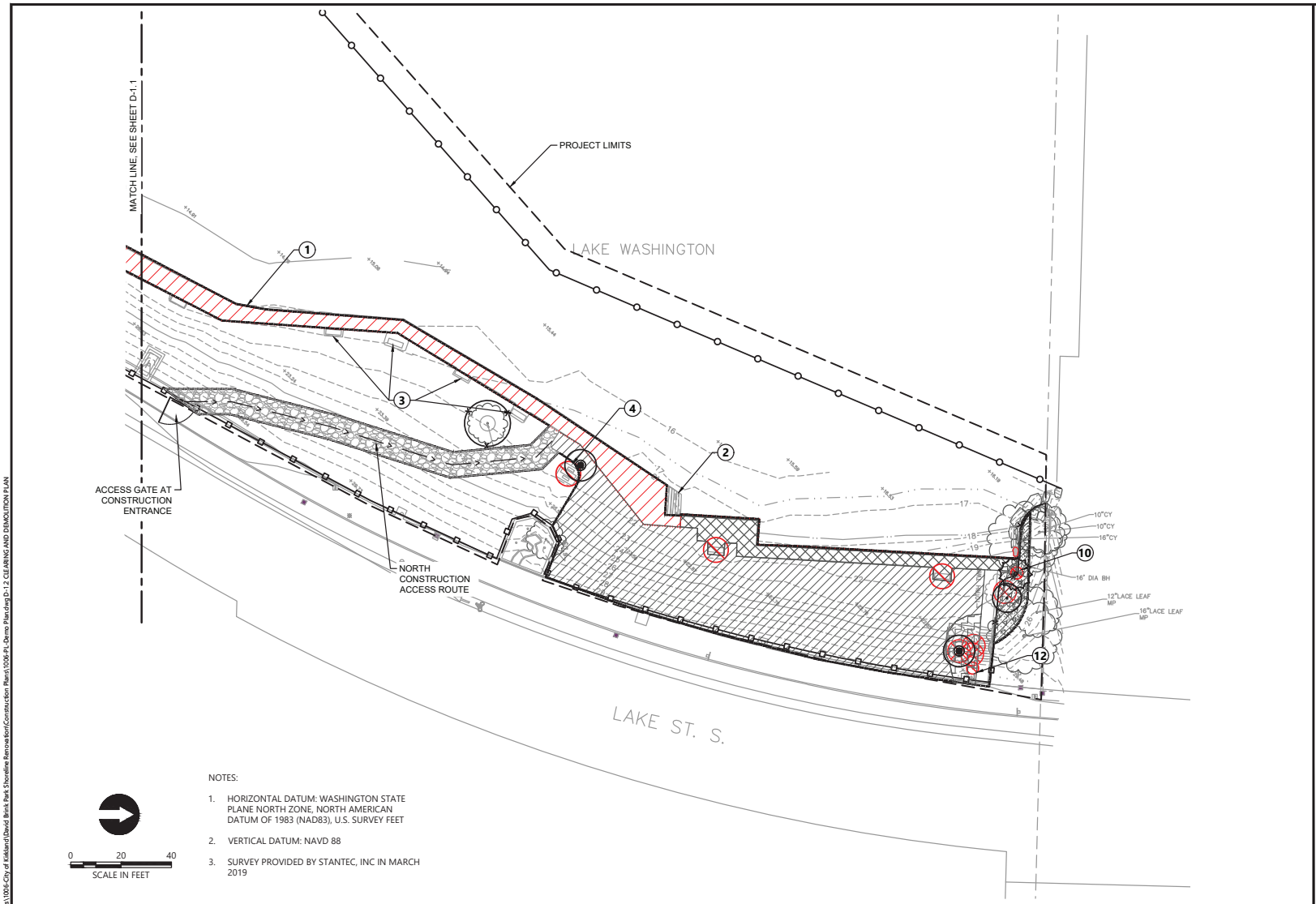

NOTES:

1. HORIZONTAL DATUM: WASHINGTON STATE PLANE NORTH ZONE, NORTH AMERICAN DATUM OF 1983 (NAD83), U.S. SURVEY FEET
2. VERTICAL DATUM: NAVD 88
3. SURVEY PROVIDED BY STANTEC, INC IN MARCH 2019

LEGEND:

- PARK BOUNDARY
- PROJECT LIMITS
- EXISTING CONTOUR
- EXISTING ORDINARY HIGH WATER MARK (OHWM)
- EXISTING ORDINARY LOW WATER MARK (OLWM)
- EXISTING ROCK BULKHEAD TO REMAIN
- PROTECT EXISTING TREES TO REMAIN
- TREE PROTECTION FENCING
- TEMPORARY CONSTRUCTION FENCING
- ACCESS GATE
- IN-WATER TURBIDITY CURTAIN
- REMOVE EXISTING TREE
- REMOVE EXISTING SITE FEATURE
- REMOVE AND SALVAGE EXISTING ROCKERY STONE
- REMOVE EXISTING CONCRETE PANEL BULKHEAD
- REMOVE SOLDIER PILE CONCRETE BULKHEAD
- REMOVE PIER DECKING
- REMOVE CONCRETE PAVING
- STRIP SOD TO 4" DEPTH
- CLEAR AND GRUB
- SELECTIVELY CLEAR AND GRUB SHRUBS - PROTECT EXISTING TREES
- CONCRETE PAVING REPAIR (SEE DEMOLITION NOTE 1)
- UPLAND CLEARING AND GRADING LIMITS

DEMOLITION NOTES:

1. PREPARE CONCRETE PAVING FOR REPAIR PER SPECIFICATIONS
2. PROTECT EXISTING STEPS
3. RETAIN EXISTING SITE FURNISHINGS
4. SALVAGE PICNIC TABLE FOR ON-SITE RELOCATION
5. REMOVE IN-WATER DEBRIS (PILE STUBS AND RIPRAP)
6. REMOVE RIPRAP AND QUARRY SPALL
7. REMOVE CONCRETE STAIRS/ STEPPED CONCRETE BULKHEAD
8. REMOVE EXISTING PIER LADDERS (2) AND CUSTOM BENCH SEATING AND SALVAGE FOR RE-INSTALLATION AFTER PIER RENOVATION
9. PROTECT EXISTING STEPS, TERRACING, BUILDING AND ASSOCIATED LANDSCAPING
10. REMOVE SIGN AND SALVAGE FOR RE-USE ON-SITE (NEW LOCATION AT DIRECTION OF OWNER)
11. REMOVE EXISTING ROCKERY AND SALVAGE OWNER-APPROVED ROCK FOR RE-USE
12. REMOVE AND SALVAGE WASTE BAG DISPENSER

ONE INCH
AT FULL SIZE, IF NOT ONE INCH SCALE ACCORDINGLY

SEPA SUBMITTAL
NOT FOR CONSTRUCTION

K:\Projects\1006-City of Kirkland\David Brink Park Shoreline Renovation\Construction Plans\1006-PL-Demo Plan.dwg D-1.2 CLEARING AND DEMOLITION PLAN

Mar 31, 2020, 11:45am dhewett

ANCHOR QEA

CITY OF KIRKLAND WASHINGTON

123 Fifth Ave
Kirkland, WA 98033
(425) 587-3300

REVISIONS

REV	DATE	BY	APP'D	DESCRIPTION

DESIGNED BY: A. SPOONER
DRAWN BY: C. WEE
CHECKED BY: P. HUMMEL
APPROVED BY: P. HUMMEL
SCALE: AS SHOWN
DATE: NOVEMBER 2019

DAVID E. BRINK PARK SHORELINE RENOVATION

CLEARING AND DEMOLITION PLAN - NORTH

D-1.2

SHEET # 10 OF 27

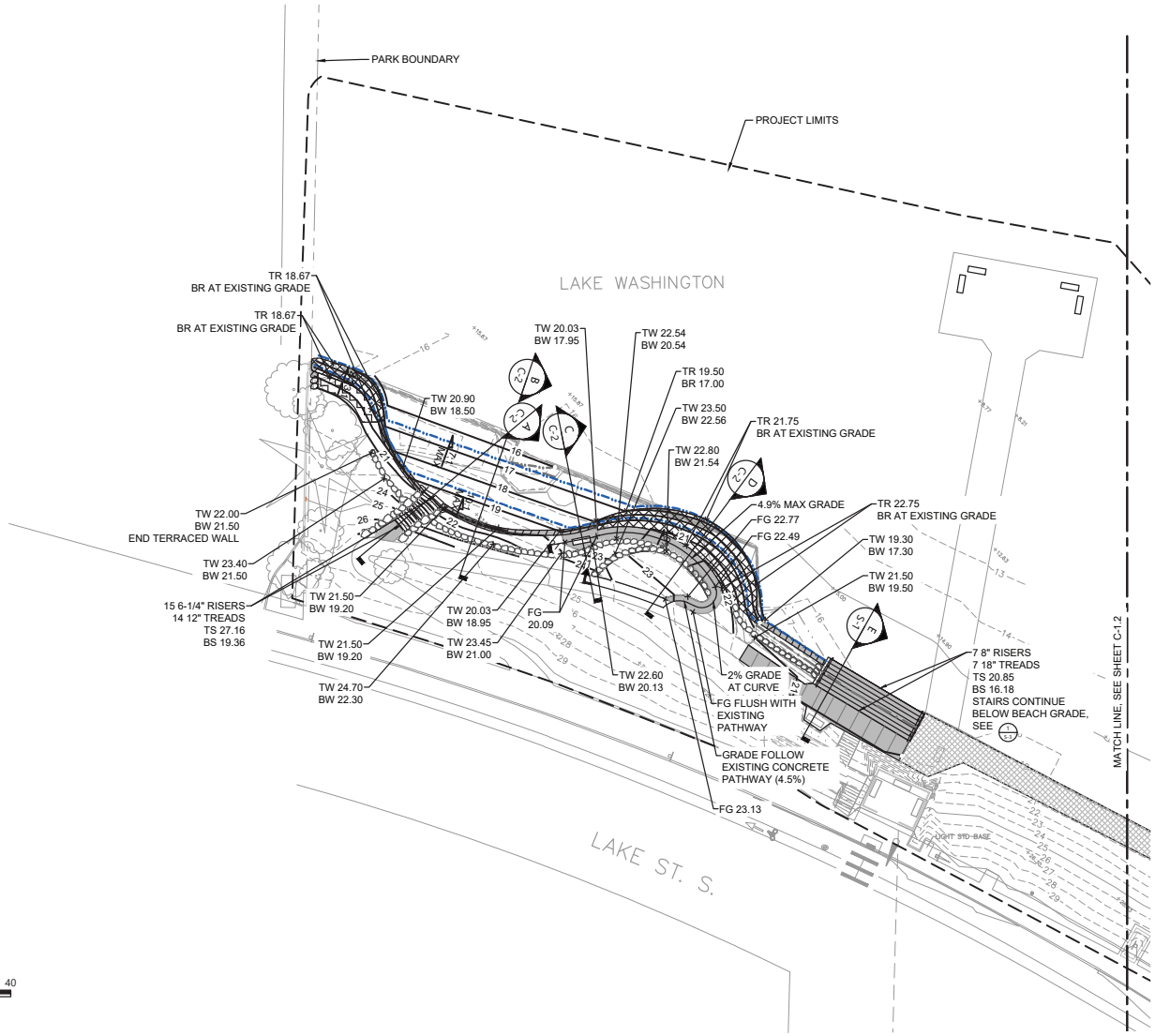

LEGEND:

- PARK BOUNDARY
- PROJECT LIMITS
- EXISTING CONTOUR
- EXISTING ORDINARY HIGH WATER MARK 18.67' NAVD88 (OHWM)
- EXISTING ORDINARY LOW WATER MARK 16.67' NAVD88 (OLWM)
- EXISTING TREE
- PROPOSED CONTOUR
- PROPOSED OHWM
- PROPOSED OLWM
- PROPOSED CONCRETE PATHWAY
- EXISTING CONCRETE PATHWAY SURFACE REPAIR AREA
- ROCK REVETMENT (2:1 SLOPE MAX)
- BRUSH LAYERING AT ROCK REVETMENT
- BASALT ROCKERY AT SHORELINE
- BASALT ROCK TERRACE (MAX 29" EXPOSED HEIGHT)
- PROPOSED BENCH
- EXISTING BENCH TO REMAIN
- SECTION LOCATION
- PROFILE LOCATION
- TW TOP OF WALL
- BW BOTTOM OF WALL
- TR TOP OF ROCK
- BR BOTTOM OF ROCK
- FG FINISH GRADE

NOTES:

1. HORIZONTAL DATUM: WASHINGTON STATE PLANE NORTH ZONE, NORTH AMERICAN DATUM OF 1983 (NAD83), U.S. SURVEY FEET
2. VERTICAL DATUM: NAVD 88
3. SURVEY PROVIDED BY STANTEC, INC IN MARCH 2019
4. BW ELEVATIONS ARE TO FINISH GRADE

ONE INCH
AT FULL SIZE, IF NOT ONE INCH SCALE ACCORDINGLY

SEPA SUBMITTAL
NOT FOR CONSTRUCTION

K:\Projects\006-City of Kirkland\David Brink Park Shoreline Renovation\Construction Plans\006-PL-Grading Plan.dwg C-1.1 GRADING PLAN

Mar 31, 2020, 11:45am dhewett

ANCHOR QEA

CITY OF KIRKLAND WASHINGTON

123 Fifth Ave
Kirkland, WA 98033
(425) 587-3300

REVISIONS

REV	DATE	BY	APP'D	DESCRIPTION

DESIGNED BY: A. SPOONER
DRAWN BY: C. WEE/C. HEWETT
CHECKED BY: P. HUMMEL
APPROVED BY: P. HUMMEL
SCALE: AS SHOWN
DATE: MARCH 2020

DAVID E. BRINK PARK SHORELINE RENOVATION

GRADING PLAN - SOUTH

C-1.1

SHEET # 11 OF 27

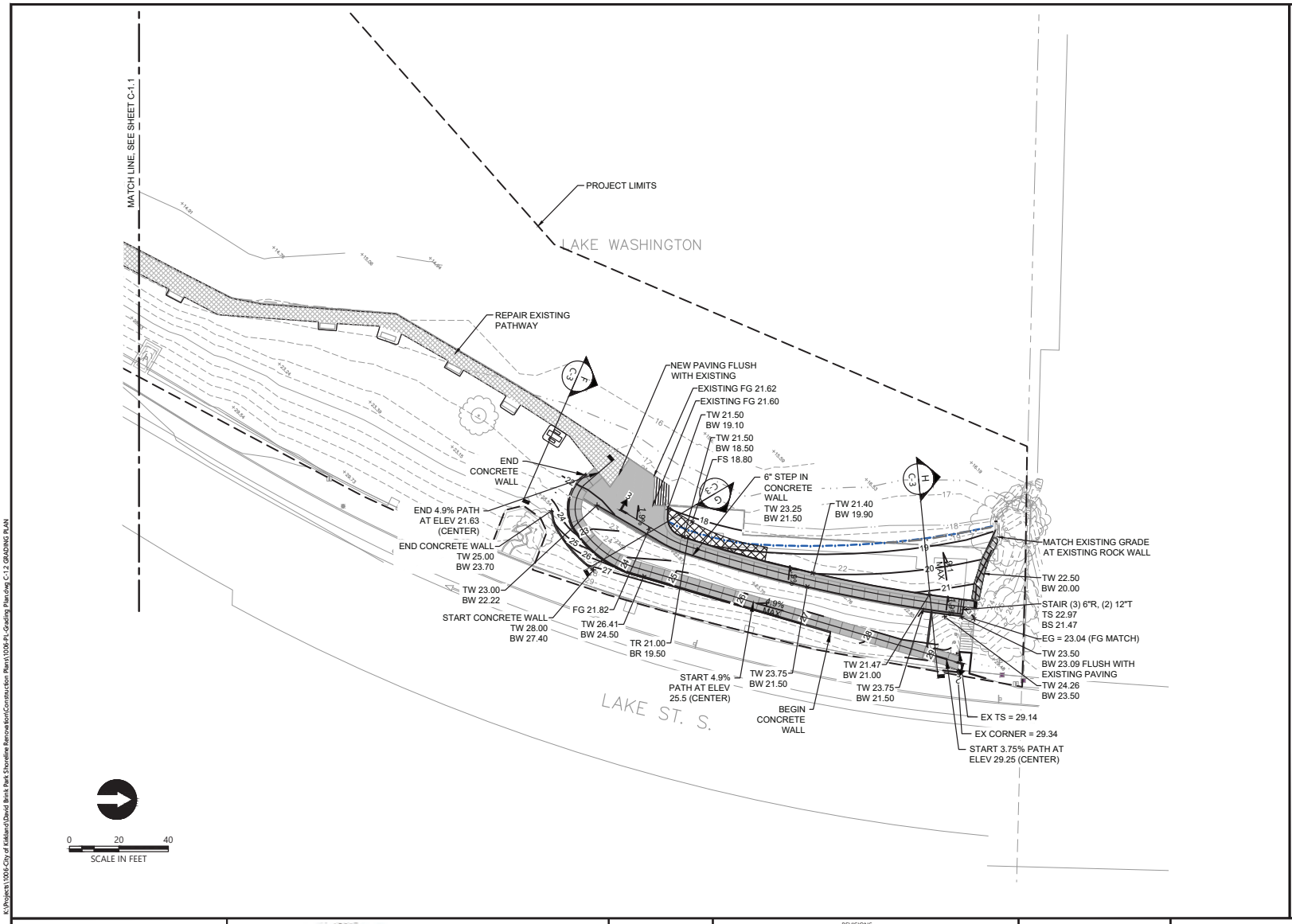

LEGEND:

- PARK BOUNDARY
- PROJECT LIMITS
- EXISTING CONTOUR
- EXISTING ORDINARY HIGH WATER MARK 18.67' NAVD88 (OHWM)
- EXISTING ORDINARY LOW WATER MARK 16.67' NAVD88 (OLWM)
- EXISTING TREE
- PROPOSED CONTOUR
- PROPOSED OHWM
- PROPOSED OLWM
- PROPOSED CONCRETE PATHWAY
- EXISTING CONCRETE PATHWAY SURFACE REPAIR AREA
- BASALT ROCKERY (29" MAX. EXPOSED HEIGHT)
- ROCK REVETMENT (2:1 SLOPE MAX.)
- EXISTING BENCH TO REMAIN
- SECTION LOCATION
- PROFILE LOCATION
- TW TOP OF WALL
- BW BOTTOM OF WALL
- TR TOP OF ROCK
- BR BOTTOM OF ROCK
- FG FINISH GRADE
- TS TOP OF STAIRS
- BS BOTTOM OF STAIRS

NOTES:

1. HORIZONTAL DATUM: WASHINGTON STATE PLANE NORTH ZONE, NORTH AMERICAN DATUM OF 1983 (NAD83), U.S. SURVEY FEET
2. VERTICAL DATUM: NAVD 88
3. SURVEY PROVIDED BY STANTEC, INC IN MARCH 2019
4. BW ELEVATIONS ARE TO FINISH GRADE

ONE INCH
AT FULL SIZE, IF NOT ONE INCH SCALE ACCORDINGLY

SEPA SUBMITTAL
NOT FOR CONSTRUCTION

K:\Projects\1006-City of Kirkland\David Brink Park Shoreline Renovation\Construction Plans\1006-PL-Grading Plan.dwg C-1.2 GRADING PLAN

Mar 31, 2020, 11:45am dhewett

ANCHOR QEA

CITY OF KIRKLAND WASHINGTON

123 Fifth Ave
Kirkland, WA 98033
(425) 587-3300

REVISIONS

REV	DATE	BY	APP'D	DESCRIPTION

DESIGNED BY: A. SPOONER
DRAWN BY: C. WEE/C. HEWETT
CHECKED BY: P. HUMMEL
APPROVED BY: P. HUMMEL
SCALE: AS SHOWN
DATE: MARCH 2020

DAVID E. BRINK PARK SHORELINE RENOVATION

GRADING PLAN - NORTH

C-1.2

SHEET # 12 OF 27

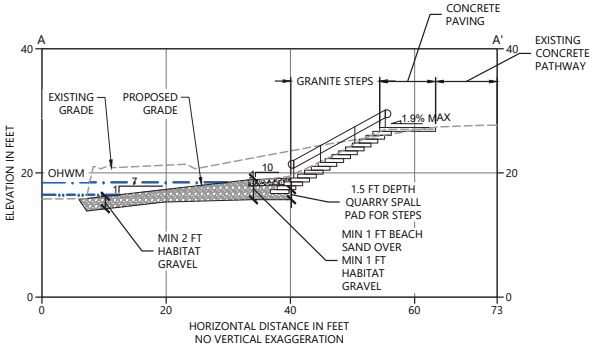

A C-1.1 SECTION A
SCALE: 1" = 10'

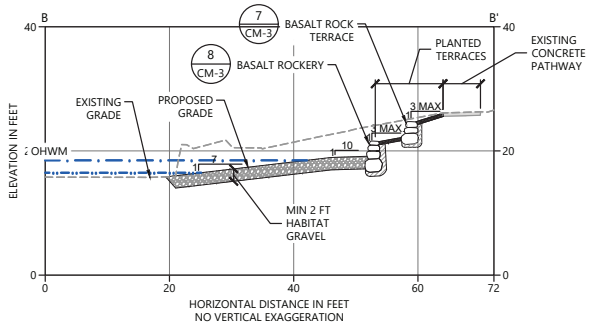

B C-1.1 SECTION B
SCALE: 1" = 10'

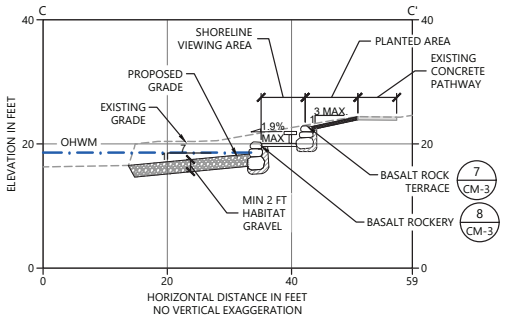

C C-1.1 SECTION C
SCALE: 1" = 10'

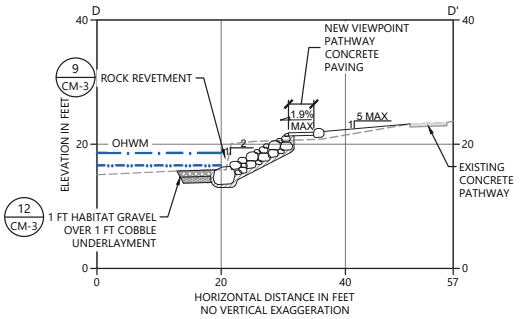

D C-1.1 SECTION D
SCALE: 1" = 10'

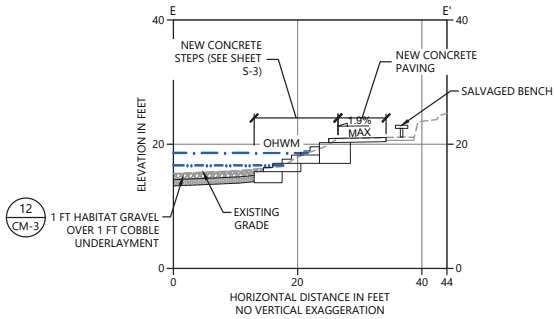

E C-1.1 SECTION E
SCALE: 1" = 10'

LEGEND:
- EXISTING GRADE
- PROPOSED GRADE
- OHWM 18.67 NAVD88
- OLWM 16.67 NAVD88
- HABITAT GRAVEL
- COBBLE UNDERLAYMENT
- BEACH SAND
- BEDDING LAYER QUARRY SPALLS

0 10 20
SCALE IN FEET

NOTES:

1. HORIZONTAL DATUM: WASHINGTON STATE PLANE NORTH ZONE, NORTH AMERICAN DATUM OF 1983 (NAD83), U.S. SURVEY FEET
2. VERTICAL DATUM: NAVD 88
3. SURVEY PROVIDED BY STANTEC, INC IN MARCH 2019

ONE INCH
AT FULL SIZE, IF NOT ONE INCH SCALE ACCORDINGLY

SEPA SUBMITTAL
NOT FOR CONSTRUCTION

ANCHOR QEA

CITY OF KIRKLAND WASHINGTON
123 Fifth Ave
Kirkland, WA 98033
(425) 587-3300

REVISIONS

REV	DATE	BY	APP'D	DESCRIPTION

DESIGNED BY: A. SPOONER
DRAWN BY: C. WEE/C. HEWETT
CHECKED BY: P. HUMMEL
APPROVED BY: P. HUMMEL
SCALE: AS SHOWN
DATE: MARCH 2020

DAVID E. BRINK PARK SHORELINE RENOVATION

GRADING AND MATERIALS SECTIONS

C-2

SHEET # 13 OF 27

K:\Projects\006-City of Kirkland\David Brink Park Shoreline Renovation\Construction Plans\006-PL-Grading Plan.dwg C-2 GRADING AND MATERIALS SECTIONS
Mar 31, 2020, 11:45am dhewett

LEGEND:
- EXISTING GRADE
- PROPOSED GRADE
- OHWM 18.67 NAVD88
- OLWM 16.67 NAVD88
- HABITAT GRAVEL
- COBBLE UNDERLAYMENT
- BEACH SAND
- BEDDING LAYER QUARRY SPALLS
- TOPSOIL

0 10 20
SCALE IN FEET

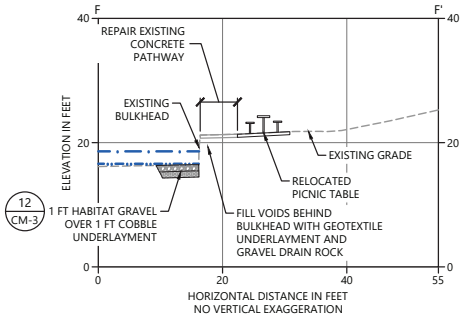

F C-1.2 SECTION F
SCALE: 1" = 10'

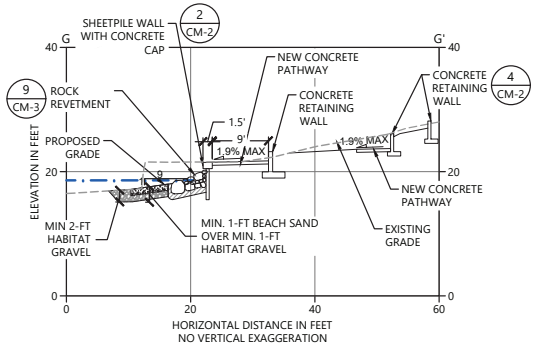

G C-1.2 SECTION G
SCALE: 1" = 10'

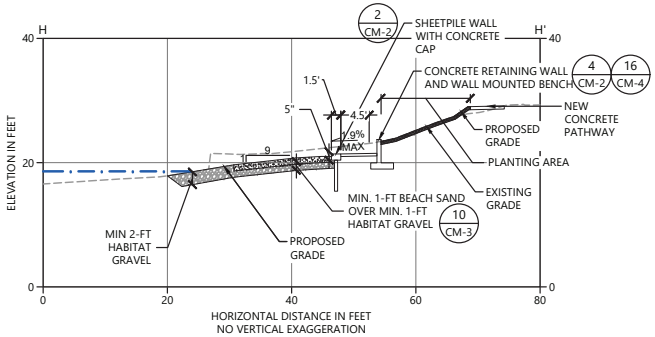

H C-1.2 SECTION H
SCALE: 1" = 10'

NOTES:

1. HORIZONTAL DATUM: WASHINGTON STATE PLANE NORTH ZONE, NORTH AMERICAN DATUM OF 1983 (NAD83), U.S. SURVEY FEET
2. VERTICAL DATUM: NAVD 88
3. SURVEY PROVIDED BY STANTEC, INC IN MARCH 2019

ONE INCH
AT FULL SIZE, IF NOT ONE INCH SCALE ACCORDINGLY

SEPA SUBMITTAL
NOT FOR CONSTRUCTION

ANCHOR QEA

CITY OF KIRKLAND WASHINGTON

123 Fifth Ave
Kirkland, WA 98033
(425) 587-3300

REVISIONS

REV	DATE	BY	APP'D	DESCRIPTION

DESIGNED BY: A. SPOONER
DRAWN BY: C. WEE/C. HEWETT
CHECKED BY: P. HUMMEL
APPROVED BY: P. HUMMEL
SCALE: AS SHOWN
DATE: MARCH 2020

DAVID E. BRINK PARK SHORELINE RENOVATION

GRADING AND MATERIALS SECTIONS

C-3

SHEET # 14 OF 27

K:\Projects\006-City of Kirkland\David Brink Park Shoreline Renovation\Construction Plans\006-PL-Grading Plan.dwg C-3 GRADING AND MATERIALS SECTIONS
Mar 31, 2020, 11:46am dhewett

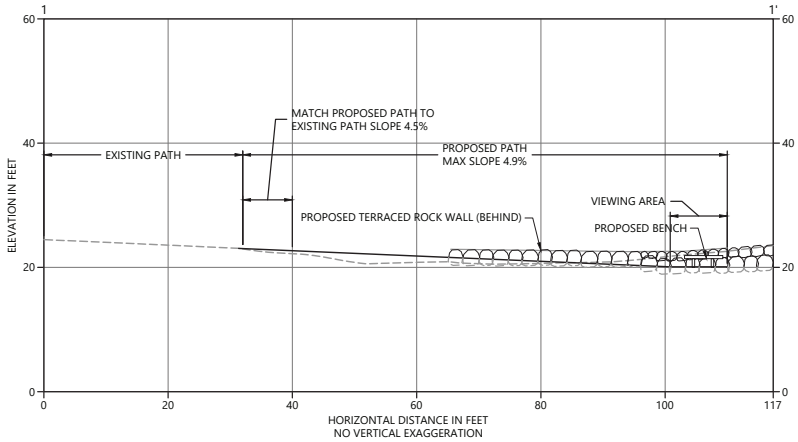

1 C-1.1 PROFILE 1
SCALE: 1" = 10'

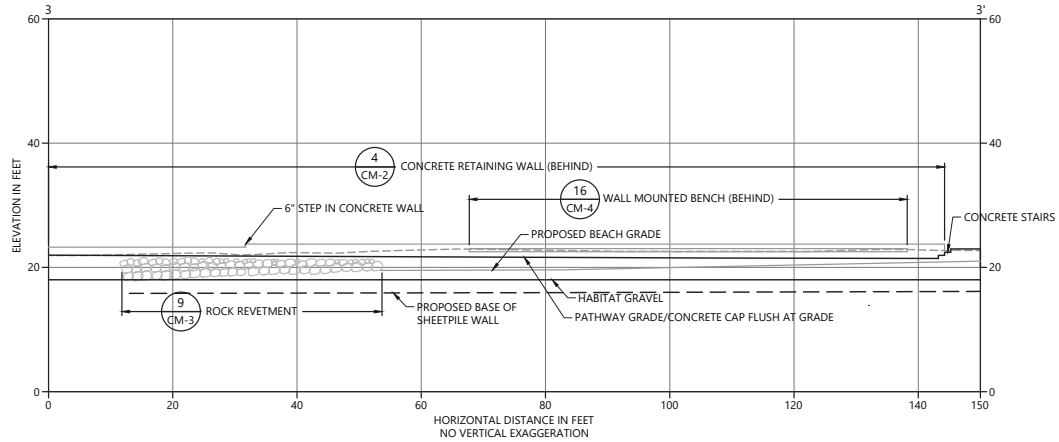

3 C-1.2 PROFILE 3
SCALE: 1" = 10'

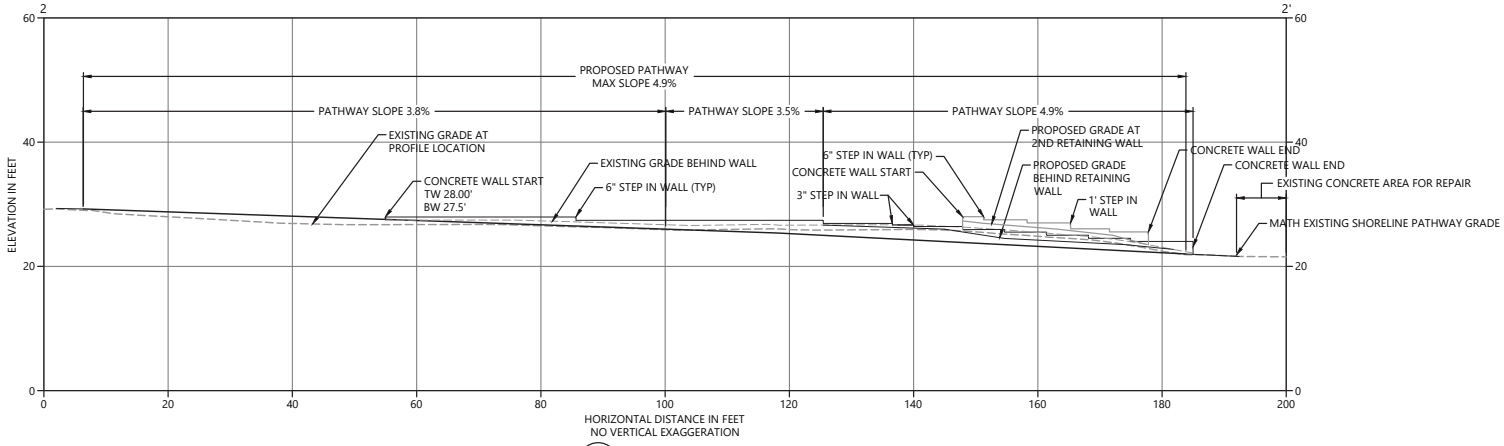

2 C-1.2 PROFILE 2
SCALE: 1" = 10'

0 10 20
SCALE IN FEET

NOTES:

1. HORIZONTAL DATUM: WASHINGTON STATE PLANE NORTH ZONE, NORTH AMERICAN DATUM OF 1983 (NAD83), U.S. SURVEY FEET
2. VERTICAL DATUM: NAVD 88
3. SURVEY PROVIDED BY STANTEC, INC IN MARCH 2019

ONE INCH
AT FULL SIZE, IF NOT ONE INCH SCALE ACCORDINGLY

SEPA SUBMITTAL
NOT FOR CONSTRUCTION

K:\Projects\006-City of Kirkland\David Brink Park Shoreline Renovation\Construction Plans\006-PL-Grading Plan.dwg C-4 PATHWAY AND WALL PROFILES
Mar 31, 2020, 11:46am dhewett

ANCHOR QEA

CITY OF KIRKLAND WASHINGTON

123 Fifth Ave
Kirkland, WA 98033
(425) 587-3300

REVISIONS

REV	DATE	BY	APP'D	DESCRIPTION

DESIGNED BY: A. SPOONER
DRAWN BY: C. WEE/C. HEWETT
CHECKED BY: P. HUMMEL
APPROVED BY: P. HUMMEL
SCALE: AS SHOWN
DATE: MARCH 2020

DAVID E. BRINK PARK SHORELINE RENOVATION

PATHWAY AND WALL PROFILES

C-4

SHEET # 15 OF 27

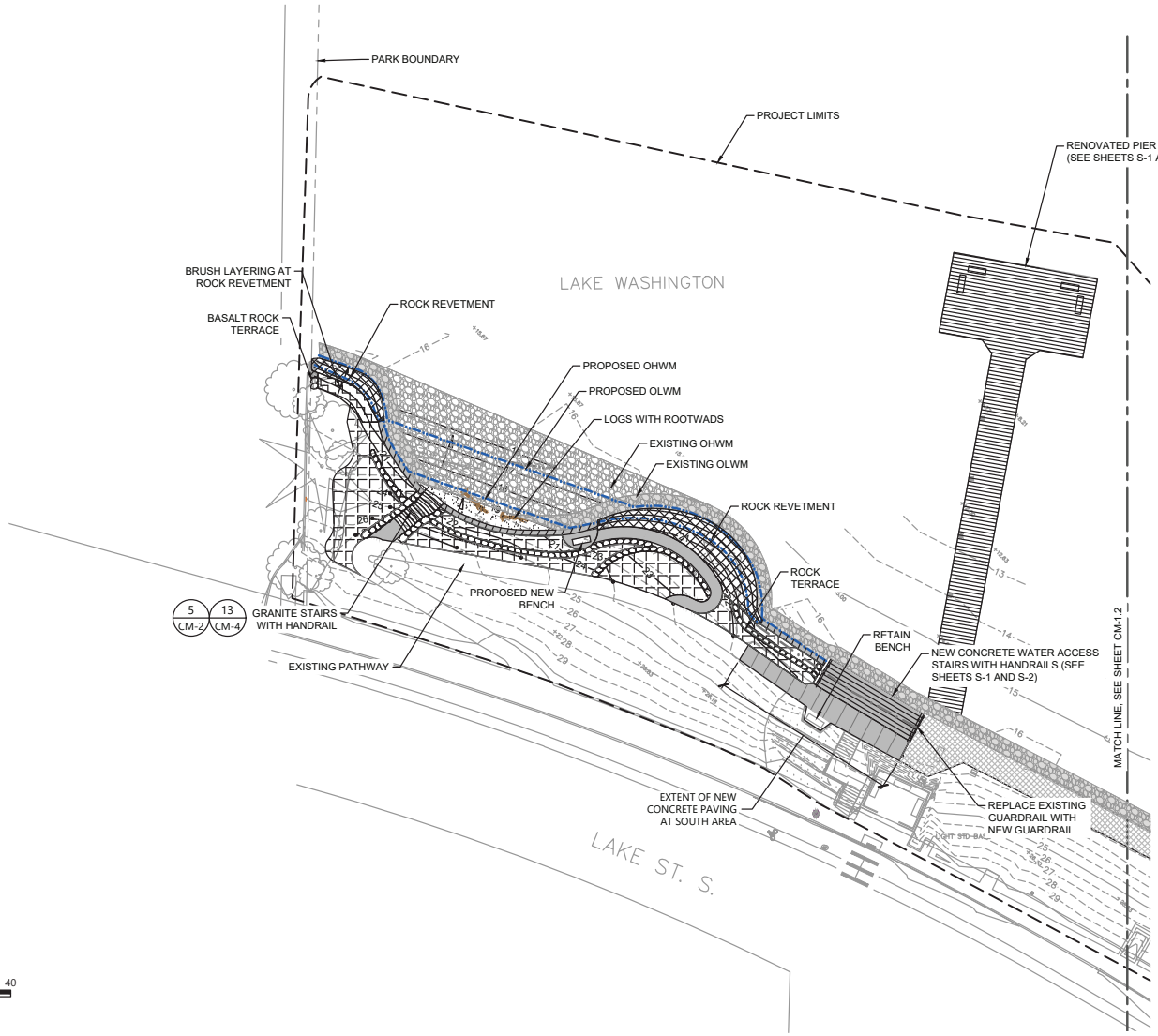

LEGEND:

- PARK BOUNDARY
- PROJECT LIMITS
- EXISTING CONTOUR
- EXISTING ORDINARY HIGH WATER MARK (OHWM)
- EXISTING ORDINARY LOW WATER MARK (OLWM)
- EXISTING TREE
- PROPOSED CONTOUR
- PROPOSED OHWM
- PROPOSED OLWM
- PROPOSED CONCRETE PATHWAY
- PROPOSED CONCRETE PATHWAY WITH DECORATIVE PAVING
- EXISTING CONCRETE PATHWAY SURFACE REPAIR AREA
- PIER GRATING
- BEACH SAND (11 CM-3)
- HABITAT GRAVEL (12 CM-3)
- COBBLE UNDERLAYMENT (12 CM-3)
- BASALT ROCKERY AT SHORELINE (29" MAX. EXPOSED HEIGHT) (8 CM-3)
- BASALT ROCK TERRACE (7 CM-3)
- ROCK REVETMENT (2:1 MAX. SLOPE) (9 CM-3)
- BRUSH LAYERING AT ROCK REVETMENT (10 CM-3)
- PROPOSED BENCH (14 CM-4)
- EXISTING BENCH TO REMAIN
- EXISTING PICNIC TABLE SALVAGED AND RELOCATED ON-SITE
- DRIFTWOOD WITH ROOTWADS
- TOPSOIL (6" DEPTH)
- HANDRAIL
- GUARDRAIL

NOTES:

1. HORIZONTAL DATUM: WASHINGTON STATE PLANE NORTH ZONE, NORTH AMERICAN DATUM OF 1983 (NAD83), U.S. SURVEY FEET
2. VERTICAL DATUM: NAVD 88
3. SURVEY PROVIDED BY STANTEC, INC IN MARCH 2019

ONE INCH
AT FULL SIZE, IF NOT ONE INCH SCALE ACCORDINGLY

SEPA SUBMITTAL
NOT FOR CONSTRUCTION

K:\Projects\1006-City of Kirkland\David Brink Park Shoreline Renovation\Construction Plans\1006-PL-Construction Materials Plan.dwg CM-1.1 CONSTRUCTION MATERIALS PLAN

Mar 31, 2020, 11:46am dhewett

ANCHOR QEA

CITY OF KIRKLAND WASHINGTON
123 Fifth Ave
Kirkland, WA 98033
(425) 587-3300

REVISIONS				
REV	DATE	BY	APP'D	DESCRIPTION

DESIGNED BY: A. SPOONER
DRAWN BY: C. WEE
CHECKED BY: P. HUMMEL
APPROVED BY: P. HUMMEL
SCALE: AS SHOWN
DATE: MARCH 2020

DAVID E. BRINK PARK SHORELINE RENOVATION

CONSTRUCTION MATERIALS PLAN - SOUTH

CM-1.1

SHEET # 16 OF 27

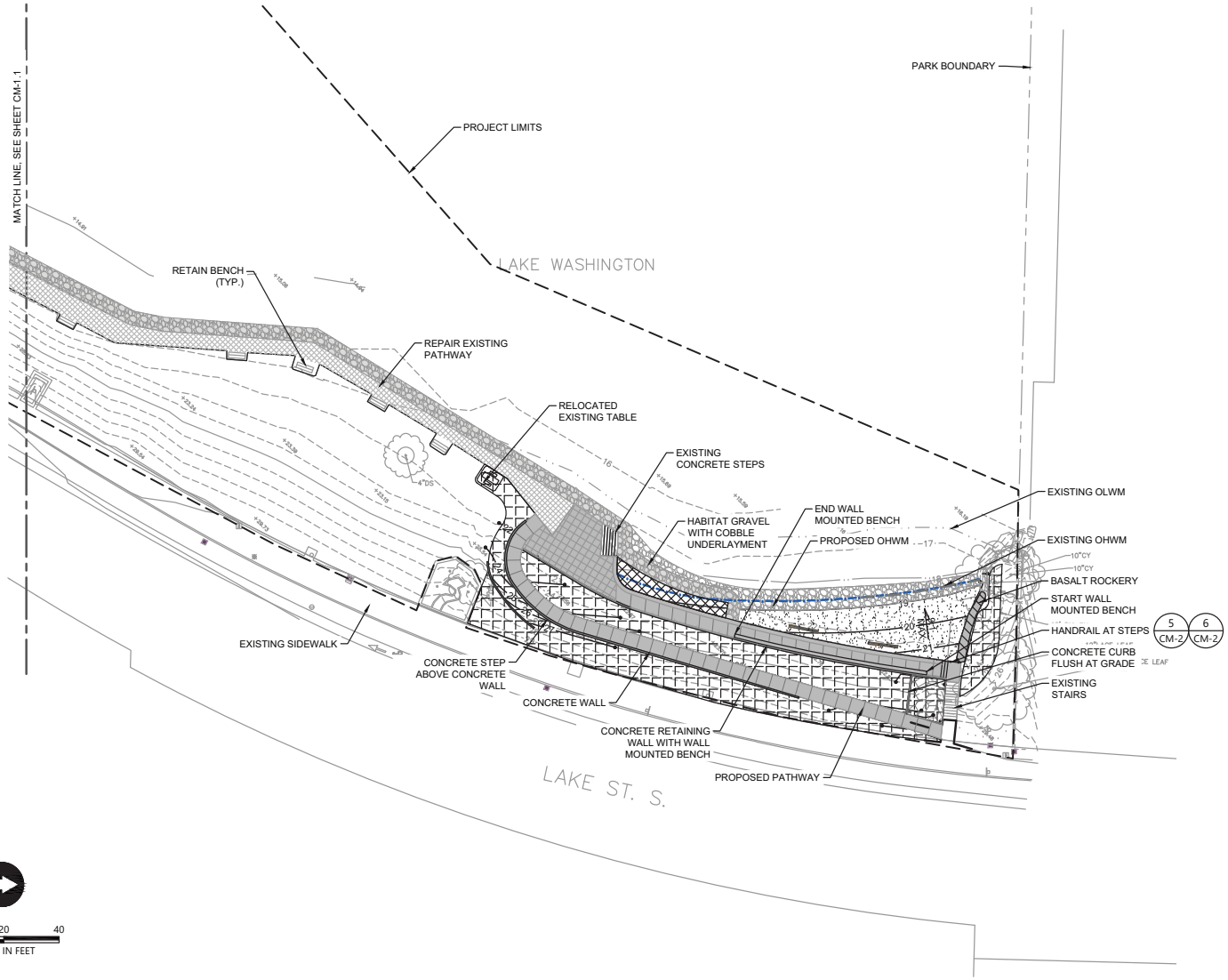

LEGEND:

- PARK BOUNDARY
- PROJECT LIMITS
- EXISTING CONTOUR
- EXISTING ORDINARY HIGH WATER MARK (OHWM)
- EXISTING ORDINARY LOW WATER MARK (OLWM)
- EXISTING TREE
- PROPOSED CONTOUR
- PROPOSED OHWM
- PROPOSED OLWM
- PROPOSED CONCRETE PATHWAY
- PROPOSED CONCRETE PATHWAY WITH DECORATIVE PAVING
- EXISTING CONCRETE PATHWAY SURFACE REPAIR AREA
- CONCRETE SEATWALL
- BEACH SAND (11 / CM-3)
- HABITAT GRAVEL (12 / CM-3)
- COBBLE UNDERLAYMENT (12 / CM-3)
- BASALT ROCKERY (29" MAX. EXPOSED HEIGHT) (8 / CM-3)
- ROCK REVETMENT (2:1 MAX. SLOPE) (9 / CM-3)
- EXISTING BENCH TO REMAIN
- EXISTING PICNIC TABLE SALVAGED AND RELOCATED ON-SITE
- DRIFTWOOD
- TOPSOIL (6" DEPTH)

NOTES:

1. HORIZONTAL DATUM: WASHINGTON STATE PLANE NORTH ZONE, NORTH AMERICAN DATUM OF 1983 (NAD83), U.S. SURVEY FEET
2. VERTICAL DATUM: NAVD 88
3. SURVEY PROVIDED BY STANTEC, INC IN MARCH 2019

ONE INCH
AT FULL SIZE, IF NOT ONE INCH SCALE ACCORDINGLY

SEPA SUBMITTAL
NOT FOR CONSTRUCTION

ANCHOR QEA

CITY OF KIRKLAND WASHINGTON
123 Fifth Ave
Kirkland, WA 98033
(425) 587-3300

REVISIONS

REV	DATE	BY	APP'D	DESCRIPTION

DESIGNED BY: A. SPOONER
DRAWN BY: C. WEE
CHECKED BY: P. HUMMEL
APPROVED BY: P. HUMMEL
SCALE: AS SHOWN
DATE: MARCH 2020

DAVID E. BRINK PARK SHORELINE RENOVATION

CONSTRUCTION MATERIALS PLAN - NORTH

CM-1.2

SHEET # 17 OF 27

K:\Projects\006-City of Kirkland\David Brink Park Shoreline Renovation\Construction Plans\006-PL-Construction Materials Plan.dwg CM-1.2 CONSTRUCTION MATERIALS PLAN

Mar 31, 2020, 11:46am dhewett

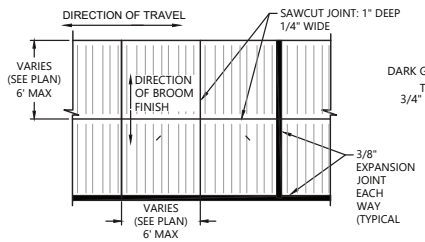

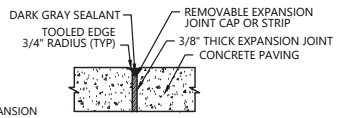

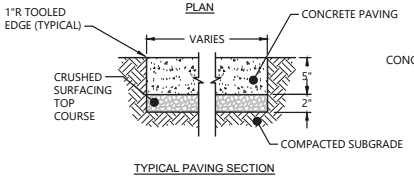

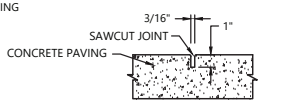

1 C-3.1 TYPICAL CONCRETE PAVING
SCALE: NOT TO SCALE

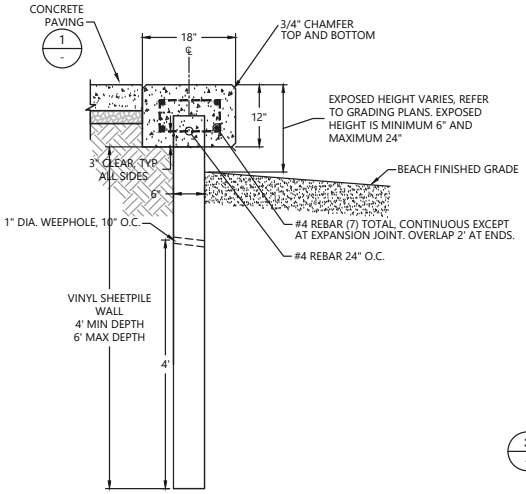

2 - SHEETPILE WALL WITH CONCRETE CAP
SCALE: 1" = 1.0'

PLACEHOLDER

3 - CONCRETE PATHWAY REPAIR
SCALE: 1" = 1.0'

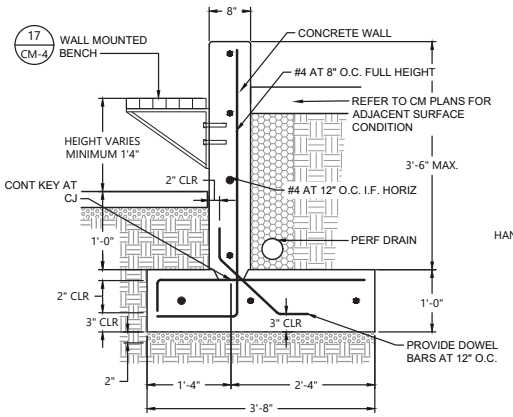

4 C-3.1 CONCRETE RETAINING WALL
SCALE: 1" = 1.0'

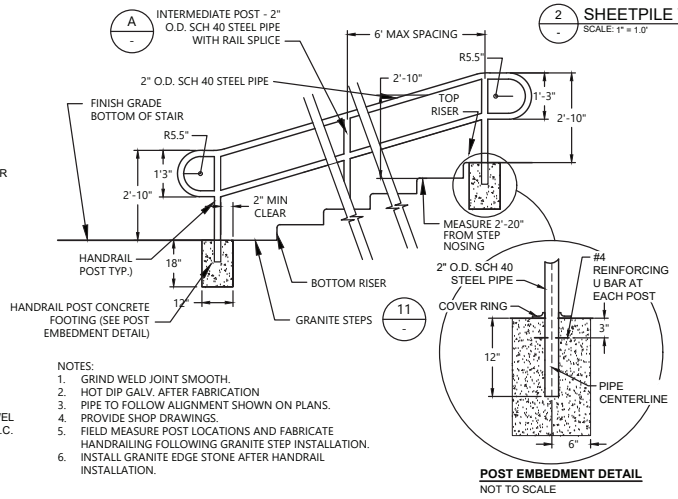

NOTES:
1. GRIND WELD JOINT SMOOTH.
2. HOT DIP GALV. AFTER FABRICATION
3. PIPE TO FOLLOW ALIGNMENT SHOWN ON PLANS.
4. PROVIDE SHOP DRAWINGS.
5. FIELD MEASURE POST LOCATIONS AND FABRICATE HANDRAILING FOLLOWING GRANITE STEP INSTALLATION.
6. INSTALL GRANITE EDGE STONE AFTER HANDRAIL INSTALLATION.

5 C-3.6 HANDRAIL AT GRANITE STEPS
SCALE: NOT TO SCALE

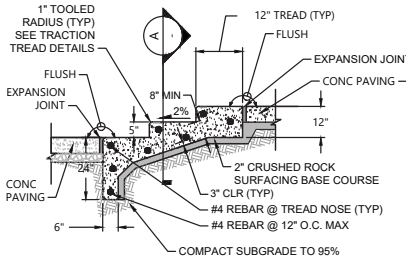

NOTE
1. SEE DETAIL 5 ON THIS SHEET FOR HANDRAIL AT STEPS.
2. LIGHT BROOM FINISH ON TREADS, SACK FACE OF RISERS.

6 - CONCRETE STEPS AND CHEEKWALL (TYP)
SCALE: NTS

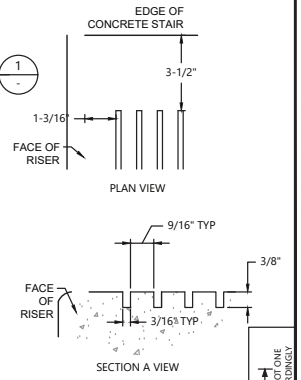

TYP TRACTION TREAD DETAILS

ONE INCH
AT FULL SIZE, IF NOT ONE INCH SCALE ACCORDINGLY

SEPA SUBMITTAL
NOT FOR CONSTRUCTION

K:\Projects\1006-City of Kirkland\David Brink Park Shoreline Renovation\Construction Plans\1006-PL-CM Details.dwg CM-2 CONSTRUCTION MATERIALS DETAILS (1 OF 3)

Mar 31, 2020, 11:46am dhewett

ANCHOR QEA

CITY OF KIRKLAND WASHINGTON
123 Fifth Ave
Kirkland, WA 98033
(425) 587-3300

REVISIONS				
REV	DATE	BY	APP'D	DESCRIPTION

DESIGNED BY: A. SPOONER
DRAWN BY: C. WEE/C. HEWETT
CHECKED BY: P. HUMMEL
APPROVED BY: P. HUMMEL
SCALE: AS SHOWN
DATE: MARCH 2020

DAVID E. BRINK PARK SHORELINE RENOVATION

CONSTRUCTION MATERIALS DETAILS (1 OF 3)

CM-2

SHEET # 18 OF 27

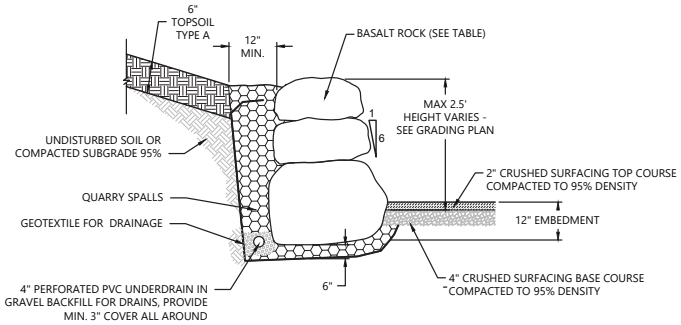

7 C-3.1 BASALT ROCK TERRACE
SCALE: NOT TO SCALE

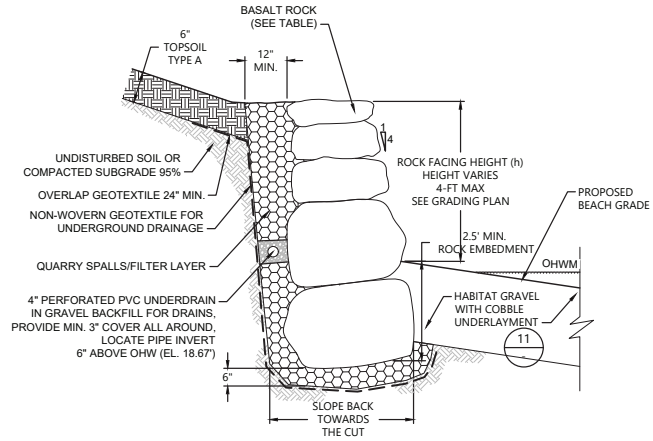

8 C-3.1 BASALT ROCKERY AT SHORELINE
SCALE: NOT TO SCALE

BASALT ROCK TABLE		
ROCK SIZE	ROCK WEIGHT (LBS)	AVERAGE DIMENSION (IN)
TWO MAN	200 TO 700	18 TO 28
THREE MAN	700 TO 2,000	28 TO 36
FOUR MAN	2,000 TO 4,000	36 TO 48

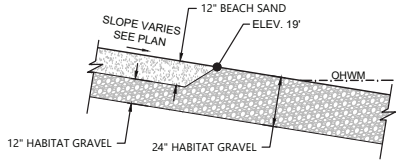

11 C-3.1 BEACH TYPICAL DETAIL
SCALE: NOT TO SCALE

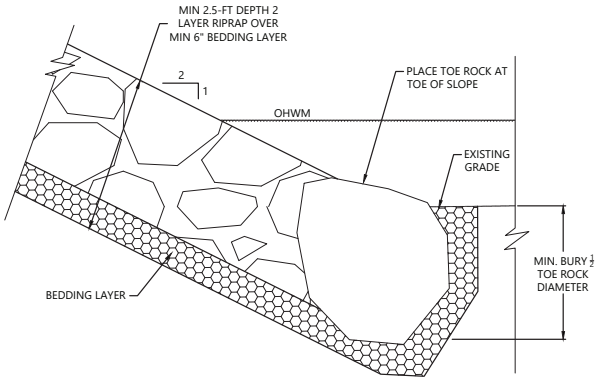

9 - ROCK REVETMENT
SCALE: 1" = 1.0'

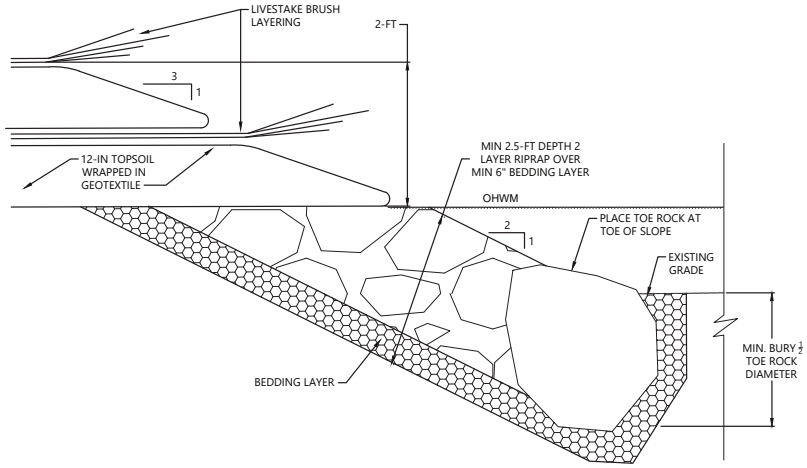

10 - BRUSH LAYERING AT ROCK REVETMENT
SCALE: 1" = 1.0'

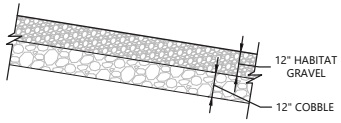

12 C-3.1 COBBLE UNDERLAYER
SCALE: NOT TO SCALE

SEPA SUBMITTAL
NOT FOR CONSTRUCTION

ONE INCH
AT FULL SIZE, IF NOT ONE INCH SCALE ACCORDINGLY

ANCHOR QEA

CITY OF KIRKLAND WASHINGTON
123 Fifth Ave
Kirkland, WA 98033
(425) 587-3300

REVISIONS

REV	DATE	BY	APP'D	DESCRIPTION

DESIGNED BY: A. SPOONER
DRAWN BY: C. WEE/C. HEWETT
CHECKED BY: P. HUMMEL
APPROVED BY: P. HUMMEL
SCALE: AS SHOWN
DATE: MARCH 2020

DAVID E. BRINK PARK SHORELINE RENOVATION

CONSTRUCTION MATERIALS DETAILS (2 OF 3)

CM-3

SHEET # 19 OF 27

K:\Projects\006-City of Kirkland\David Brink Park Shoreline Renovation\Construction Plans\006-PL-CM Details.dwg CM-3 CONSTRUCTION MATERIALS DETAILS (2 OF 3)
Mar 31, 2020, 11:47am dhewett

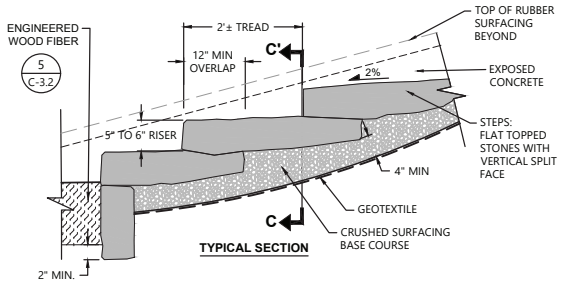

TYPICAL SECTION

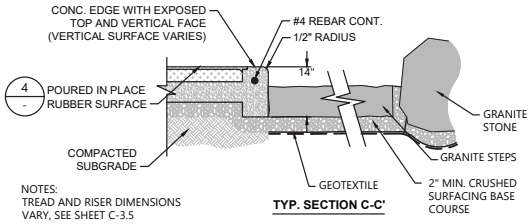

NOTES:
TREAD AND RISER DIMENSIONS VARY, SEE SHEET C-3.5

TYP. SECTION C-C'

13 C-3.6 GRANITE STEPS
SCALE: NOT TO SCALE

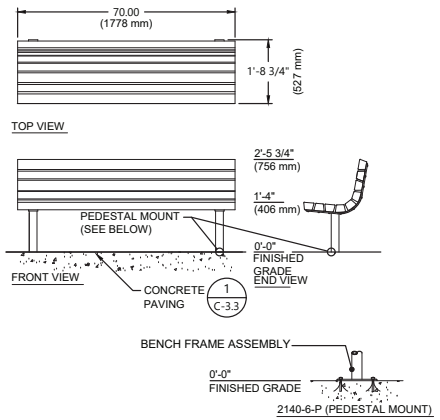

14 C-3.1 BENCH
SCALE: NOT TO SCALE

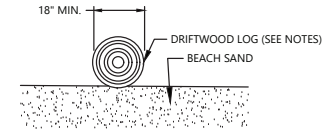

NOTES:

1. DRIFTWOOD LOGS SHALL HAVE BARK AND NATURALLY WEATHERED ROOT WADS REMOVED
2. DRIFTWOOD SHALL BE PROVIDED BY THE CONTRACTOR AND PLACED AS DIRECTED BY PROJECT ENGINEER.

15 C-3.1 UNANCHORED DRIFTWOOD
SCALE: NOT TO SCALE

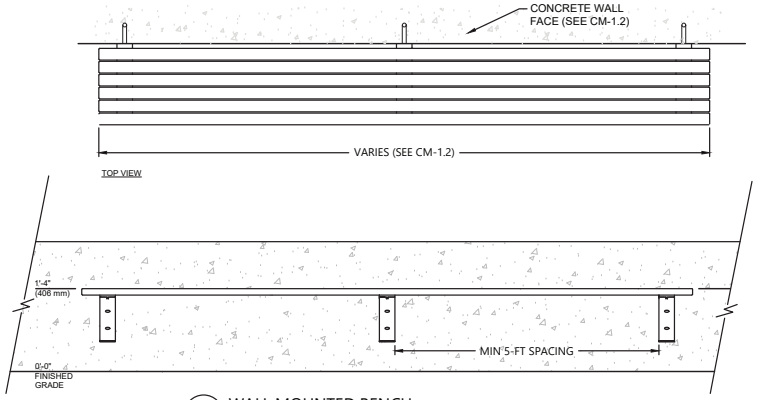

16 CM-1.2 WALL MOUNTED BENCH
SCALE: 1" = 1'

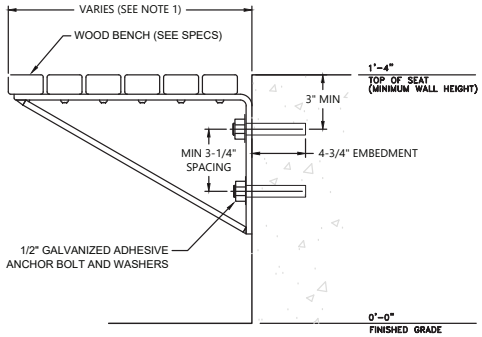

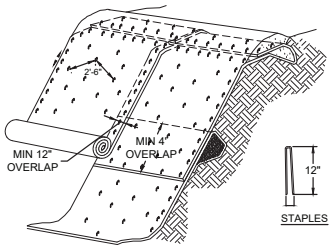

JUTE FABRIC INSTALLATION, TOP OF SLOPE ISOMETRIC VIEW
NOT TO SCALE

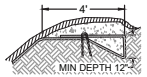

TOP OF SLOPE ANCHOR DETAIL

NOTES:

1. SLOPE SURFACE SHALL BE FREE OF ROCKS, CLODS, STICKS AND GRASS. MATS/BLANKETS SHALL HAVE GOOD SOIL CONTACT.
2. LAY BLANKETS LOOSELY AND STAKE OR STAPLE TO MAINTAIN DIRECT CONTACT WITH THE SOIL. DO NOT STRETCH.
3. MATS/BLANKETS SHOULD BE INSTALLED VERTICALLY DOWNSLOPE.
4. INSTALL JUTE MAT OVER ENTIRE PLANTING AREA. AVOID EXISTING TREES AND EXISTING STUMPS.
5. WATTLES SHALL BE PLACED OVER JUTE MATTING. EXCAVATE WATTLE TRENCH (SEE DETAIL XX) PRIOR TO PLACING JUTE FABRIC.
6. JUTE FABRIC SHALL BE ROLLED IN A CONTROLLED FASHION. INSTALL STAPLES AS MAT IS UNROLLED. FABRIC SHALL NOT BE ALLOWED TO ROLL DOWN THE SLOPE ON ITS OWN.

17 CM-1 JUTE FABRIC SLOPE PROTECTION
SCALE:NTS

ONE INCH
AT FULL SIZE, IF NOT ONE INCH SCALE ACCORDINGLY

SEPA SUBMITTAL
NOT FOR CONSTRUCTION

K:\Projects\1006-City of Kirkland\David Brink Park Shoreline Renovation\Construction Plans\1006-PL-CM Details.dwg CM-3 CONSTRUCTION MATERIALS DETAILS (3 OF 3)

Mar 31, 2020, 11:47am dnewett

ANCHOR QEA

CITY OF KIRKLAND WASHINGTON

123 Fifth Ave
Kirkland, WA 98033
(425) 587-3300

REVISIONS				
REV	DATE	BY	APP'D	DESCRIPTION

DESIGNED BY: A. SPOONER
DRAWN BY: C. WEE/C. HEWETT
CHECKED BY: P. HUMMEL
APPROVED BY: P. HUMMEL
SCALE: AS SHOWN
DATE: MARCH 2020

DAVID E. BRINK PARK SHORELINE RENOVATION

CONSTRUCTION MATERIALS DETAILS (3 OF 3)

CM-4

SHEET # 20 OF 27

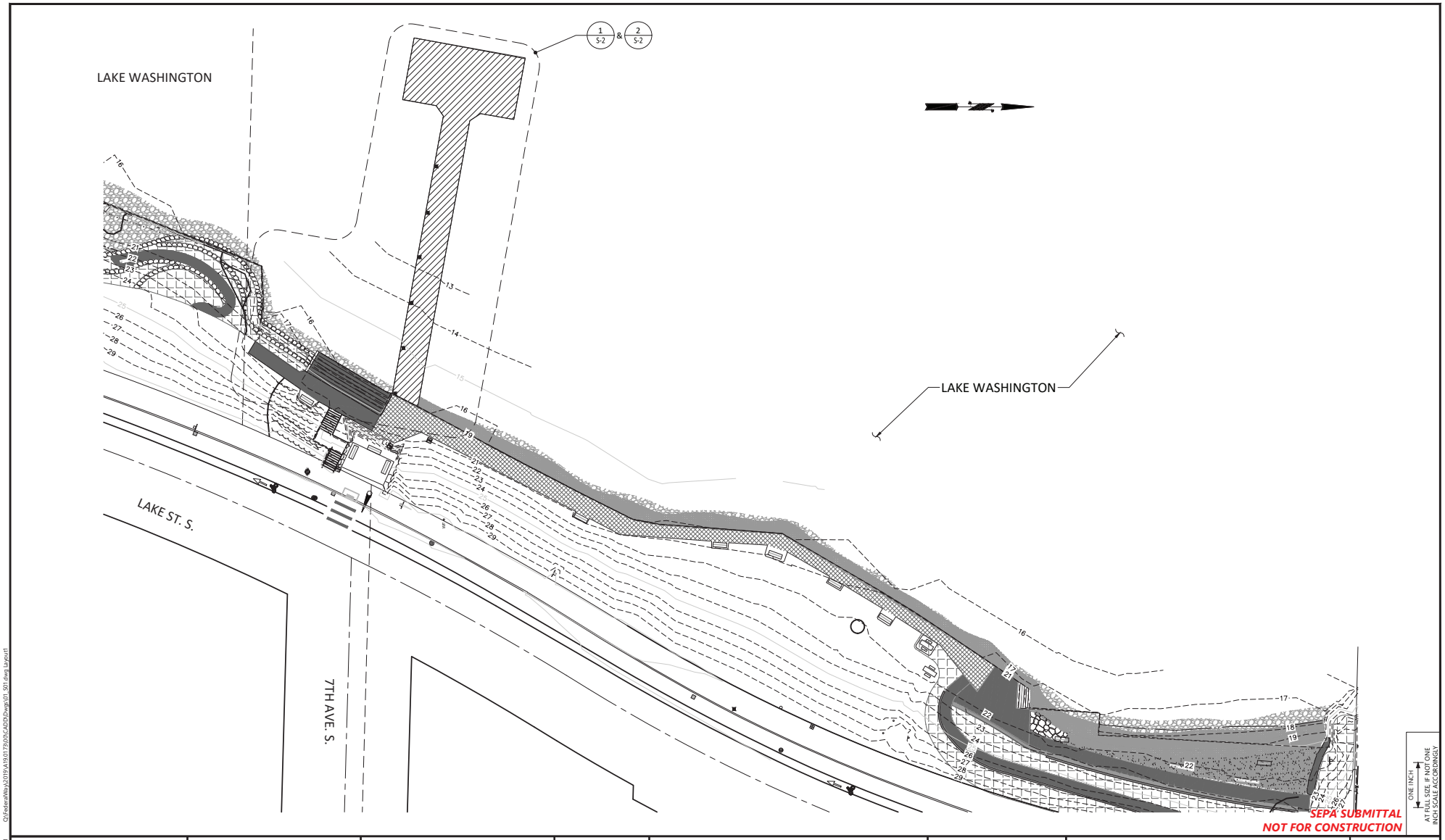

Q:\Federal Way\2019\A19017900\CADD\Dwg\01_S01.dwg layout1

Mar 18, 2020 3:28pm USMKF3421

ANCHOR QEA

CITY OF KIRKLAND WASHINGTON

123 Fifth Ave
Kirkland, WA 98033
(425) 587-3300

WSP USA Inc.
33301 9th Avenue South
Suite 300
Federal Way, WA 98003-2600
TEL: (206) 431-2300
FAX: (206) 431-2250

REVISIONS

REV	DATE	BY	APP'D	DESCRIPTION

DESIGNED BY: C. ENG
DRAWN BY: J. MENDENHALL
CHECKED BY: C. ENG
APPROVED BY: J. GALLOWAY
SCALE: AS NOTED
DATE: MARCH 2020

DAVID E. BRINK PARK SHORELINE RENOVATION

STRUCTURAL PLAN

S-1

SHEET NO. 21 OF 27

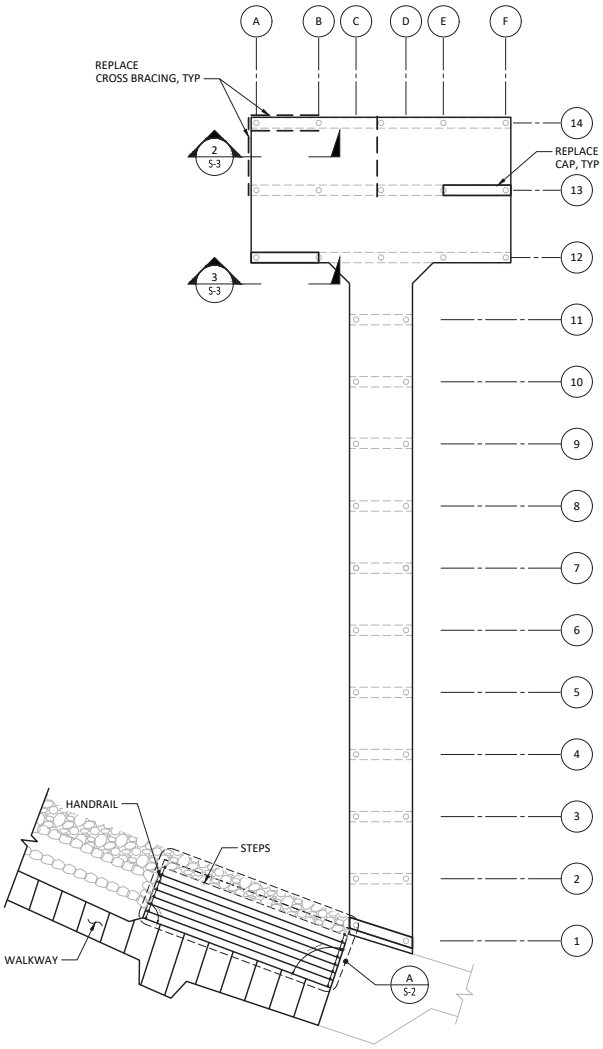

1 - **PILE & CAP PLAN - PIER**
SCALE: 1' = 12'-0"

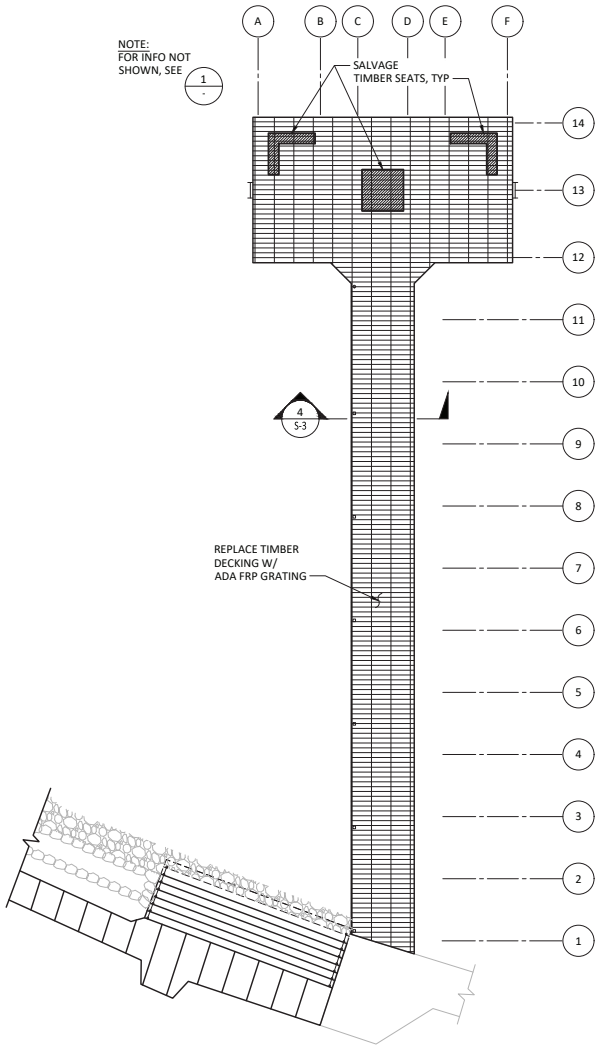

2 - **SURFACE PLAN - PIER**
SCALE: 1' = 12'-0"

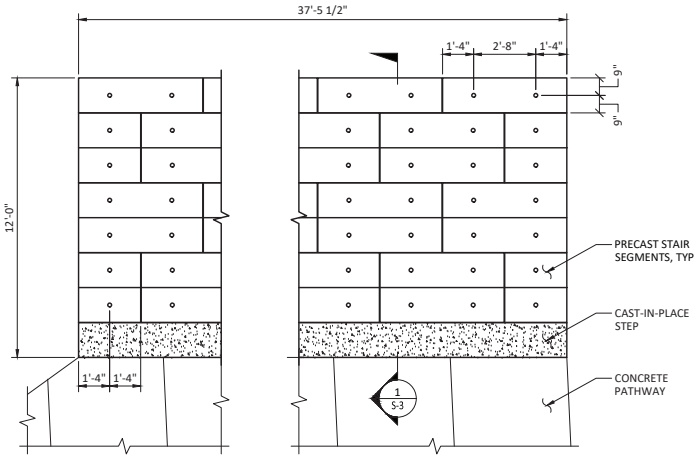

A - **DETAIL - STAIRS**
S-2
SCALE: 3/8" = 1'-0"

ONE INCH
AT FULL SIZE, IF NOT ONE INCH SCALE ACCORDINGLY

SEPA SUBMITTAL
NOT FOR CONSTRUCTION

ANCHOR QEA

CITY OF KIRKLAND WASHINGTON
123 Fifth Ave
Kirkland, WA 98033
(425) 587-3300

WSP USA Inc.
33301 9th Avenue South
Suite 300
Federal Way, WA 98003-2600
TEL: (206) 431-2300
FAX: (206) 431-2250

REVISIONS				
REV	DATE	BY	APP'D	DESCRIPTION

DESIGNED BY: C. ENG
DRAWN BY: J. MENDENHALL
CHECKED BY: C. ENG
APPROVED BY: J. GALLOWAY
SCALE: AS NOTED
DATE: MARCH 2020

DAVID E. BRINK PARK SHORELINE RENOVATION

PIER AND STEPS PLAN

S-2

SHEET NO. 22 OF 27

Q:\Federal Way\2019\A19\01790\CADD\Dwgs\01-S02.dwg layout1
Mar 19, 2020, 3:32pm USMN57421

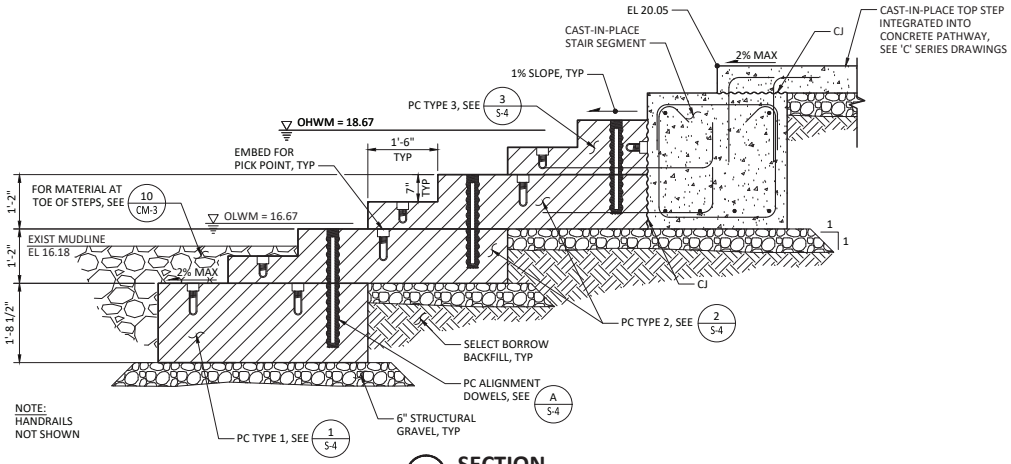

1 S-2 **SECTION**
SCALE: 3/4" = 1'-0"

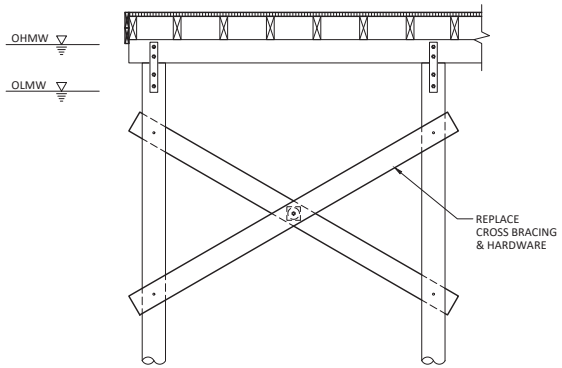

2 S-2 **CROSS BRACE REPLACMENT**
SCALE: 3/8" = 1'-0"

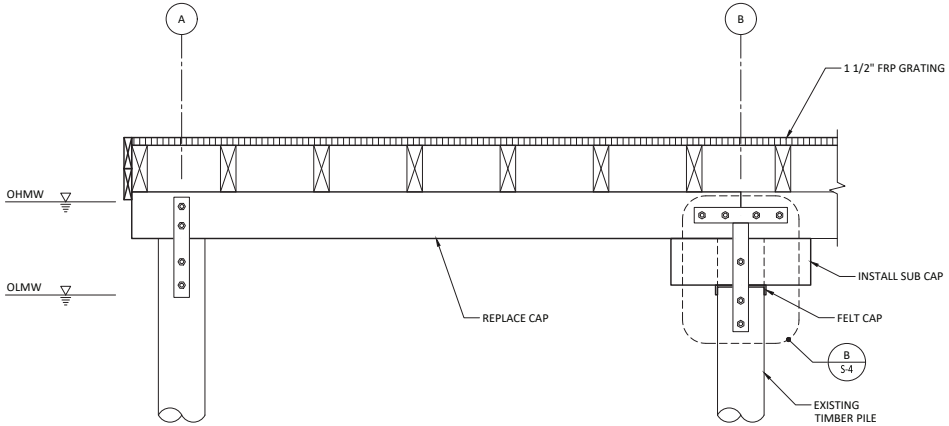

3 S-2 **PILE CAP REPLACMENT**
SCALE: 3/4" = 1'-0"

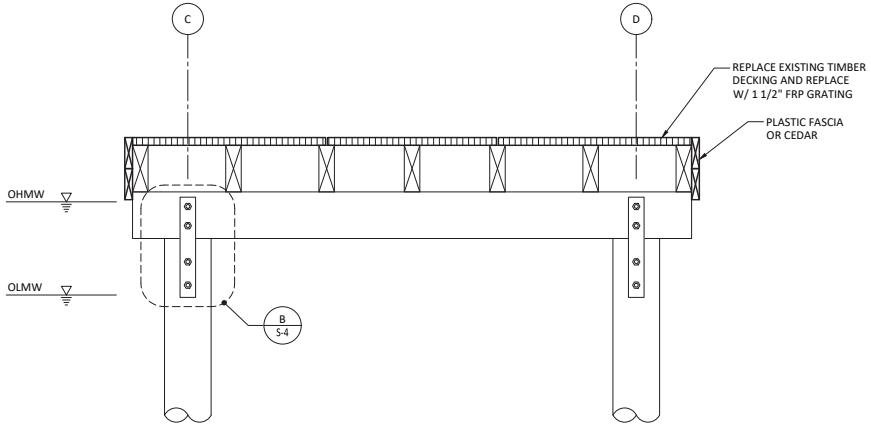

4 S-2 **PILE CAP REPLACMENT**
SCALE: 3/4" = 1'-0"

ONE INCH
AT FULL SIZE, IF NOT ONE INCH SCALE ACCORDINGLY

SEPA SUBMITTAL
NOT FOR CONSTRUCTION

ANCHOR QEA

CITY OF KIRKLAND WASHINGTON
123 Fifth Ave
Kirkland, WA 98033
(425) 587-3300

WSP USA Inc.
33301 9th Avenue South
Suite 300
Federal Way, WA 98003-2600
TEL: (206) 431-2300
FAX: (206) 431-2250

REVISIONS

REV	DATE	BY	APP'D	DESCRIPTION

DESIGNED BY: C. ENG
DRAWN BY: J. MENDENHALL
CHECKED BY: C. ENG
APPROVED BY: J. GALLOWAY
SCALE: AS NOTED
DATE: MARCH 2020

DAVID E. BRINK PARK SHORELINE RENOVATION

STRUCTURAL DETAILS

S-3

SHEET NO. 23 OF 27

Q:\Federal Way\2019\A19017900\CADD\Dwg\01_S03.dwg Layout1
Mar 19, 2020, 3:46pm USMAF5421

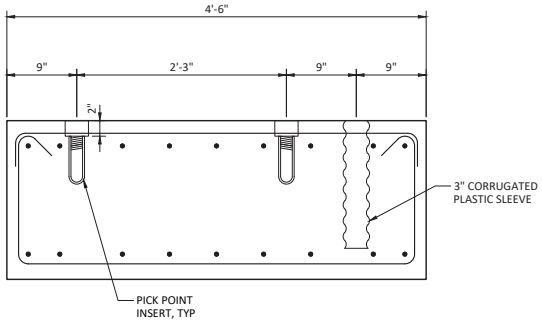

1 S-3 **PC STEP TYPE 1**
SCALE: 1 1/2" = 1'-0"

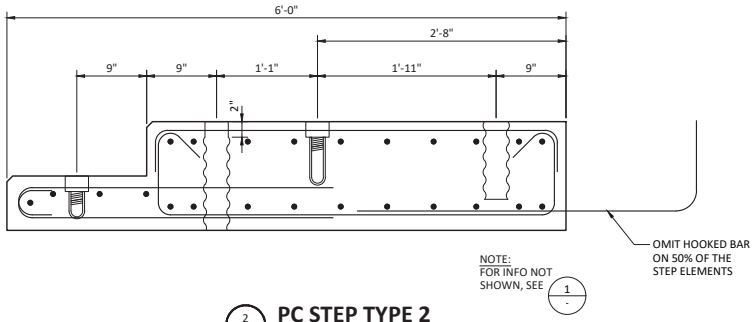

2 S-3 **PC STEP TYPE 2**
SCALE: 1 1/2" = 1'-0"

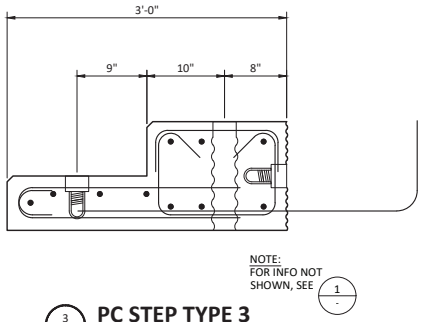

3 S-3 **PC STEP TYPE 3**
SCALE: 1 1/2" = 1'-0"

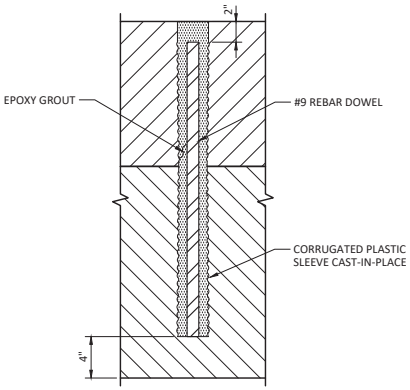

A S-3 **DETAIL - PC ALIGNMENT DOWEL**
SCALE: 2" = 1'-0"

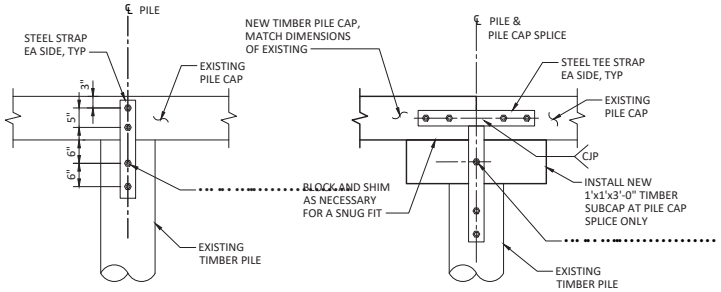

B S-3 **DETAIL - PILE STRAP REPLACEMENT**
SCALE: 3/4" = 1'-0"

ONE INCH
AT FULL SIZE, IF NOT ONE INCH SCALE ACCORDINGLY

SEPA SUBMITTAL
NOT FOR CONSTRUCTION

ANCHOR QEA

CITY OF KIRKLAND WASHINGTON
123 Fifth Ave
Kirkland, WA 98033
(425) 587-3300

WSP
WSP USA Inc.
33301 9th Avenue South
Suite 300
Federal Way, WA 98003-2600
TEL: (206) 431-2300
FAX: (206) 431-2250

REVISIONS

REV	DATE	BY	APP'D	DESCRIPTION

DESIGNED BY: C. ENG
DRAWN BY: J. MENDENHALL
CHECKED BY: C. ENG
APPROVED BY: J. GALLOWAY
SCALE: AS NOTED
DATE: MARCH 2020

DAVID E. BRINK PARK SHORELINE RENOVATION

STRUCTURAL SECTIONS

S-4

SHEET NO. 24 OF 27

Q:\Federal Way\2019\A19017900\CADD\Dwgs\01_S04.dwg Layout1
Mar 19, 2020, 3:39pm USMAFSAZ1

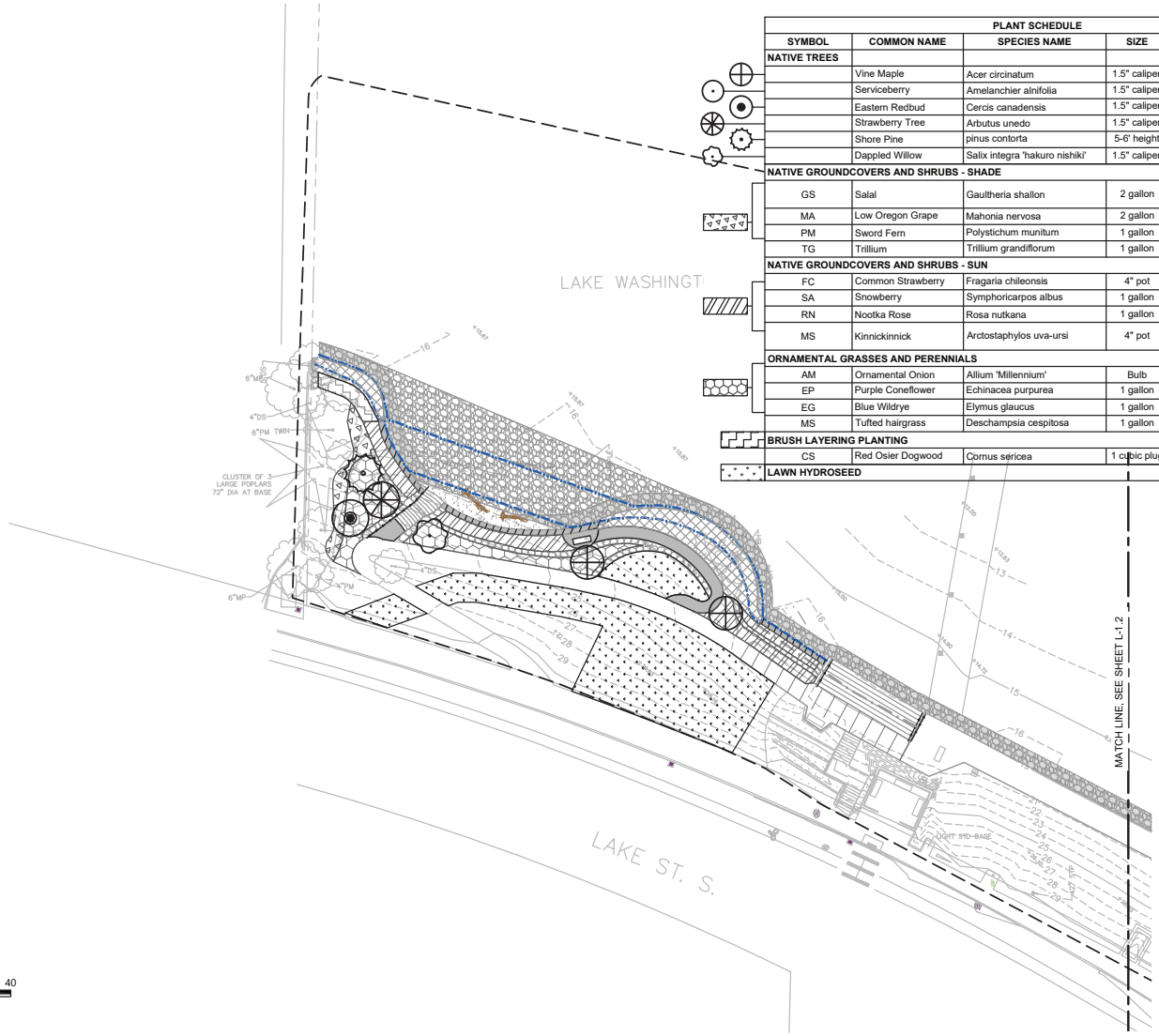

PLANT SCHEDULE					
SYMBOL	COMMON NAME	SPECIES NAME	SIZE	SPACING	REMARKS
NATIVE TREES					
	Vine Maple	Acer circinatum	1.5" caliper	As Shown	
	Serviceberry	Amelanchier alnifolia	1.5" caliper	As Shown	
	Eastern Redbud	Cercis canadensis	1.5" caliper	As Shown	
	Strawberry Tree	Arbutus unedo	1.5" caliper	As Shown	
	Shore Pine	pinus contorta	5-6' height	As Shown	
	Dappled Willow	Salix integra 'hakuro nishiki'	1.5" caliper	As Shown	
NATIVE GROUNDCOVERS AND SHRUBS - SHADE					
GS	Salal	Gaultheria shallon	2 gallon	3' O.C.	EQUAL MIX OF SPECIES
MA	Low Oregon Grape	Mahonia nervosa	2 gallon	3' O.C.	
PM	Sword Fern	Polystichum munitum	1 gallon	3' O.C.	
TG	Trillium	Trillium grandiflorum	1 gallon	2' O.C.	
NATIVE GROUNDCOVERS AND SHRUBS - SUN					
FC	Common Strawberry	Fragaria chileonsis	4" pot	1' O.C.	EQUAL MIX OF SPECIES
SA	Snowberry	Symphoricarpos albus	1 gallon	4' O.C.	
RN	Nootka Rose	Rosa nutkana	1 gallon	2' O.C.	
MS	Kinnickinnick	Arctostaphylos uva-ursi	4" pot	1' O.C.	
ORNAMENTAL GRASSES AND PERENNIALS					
AM	Ornamental Onion	Allium 'Millennium'	Bulb		EQUAL MIX OF SPECIES
EP	Purple Coneflower	Echinacea purpurea	1 gallon	2' O.C.	
EG	Blue Wildrye	Elymus glaucus	1 gallon	2' O.C.	
MS	Tufted hairgrass	Deschampsia cespitosa	1 gallon	2' O.C.	
BRUSH LAYERING PLANTING					
CS	Red Osier Dogwood	Cornus sericea	1 cubic plug	2' O.C.	
LAWN HYDROSEED					

LEGEND:

- PARK BOUNDARY
- PROJECT LIMITS
- EXISTING CONTOUR
- EXISTING ORDINARY HIGH WATER MARK (OHWM)
- EXISTING ORDINARY LOW WATER MARK (OLWM)
- EXISTING TREE
- PROPOSED CONTOUR
- PROPOSED OHWM
- PROPOSED OLWM
- PROPOSED CONCRETE VIEWPOINT PATHWAY
- PROPOSED BEACH SAND
- PROPOSED HABITAT GRAVEL
- PROPOSED ROCKERY
- PROPOSED BASALT ROCK TERRACE
- PROPOSED BENCH
- EXISTING BENCH TO REMAIN
- PROPOSED DRIFTWOOD WITH ROOTWADS
- LAWN RESTORATION AREA

NOTES:

1. HORIZONTAL DATUM: WASHINGTON STATE PLANE NORTH ZONE, NORTH AMERICAN DATUM OF 1983 (NAD83), U.S. SURVEY FEET
2. VERTICAL DATUM: NAVD 88
3. SURVEY PROVIDED BY STANTEC, INC IN MARCH 2019

ONE INCH
AT FULL SIZE, IF NOT ONE INCH SCALE ACCORDINGLY

0 20 40
SCALE IN FEET

SEPA SUBMITTAL
NOT FOR CONSTRUCTION

K:\Projects\1006-City of Kirkland\David Brink Park Shoreline Renovation\Construction Plans\1006-PL-Planting Plan.dwg L-1.1 PLANTING PLAN

Mar 31, 2020 11:47am dhewett

ANCHOR QEA

CITY OF KIRKLAND WASHINGTON

123 Fifth Ave
Kirkland, WA 98033
(425) 587-3300

REVISIONS				
REV	DATE	BY	APP'D	DESCRIPTION

DESIGNED BY: A. SPOONER
DRAWN BY: C. WEE/C. HEWETT
CHECKED BY: P. HUMMEL
APPROVED BY: P. HUMMEL
SCALE: AS SHOWN
DATE: MARCH 2020

DAVID E. BRINK PARK SHORELINE RENOVATION

PLANTING PLAN - SOUTH

L-1.1

SHEET # 25 OF 27

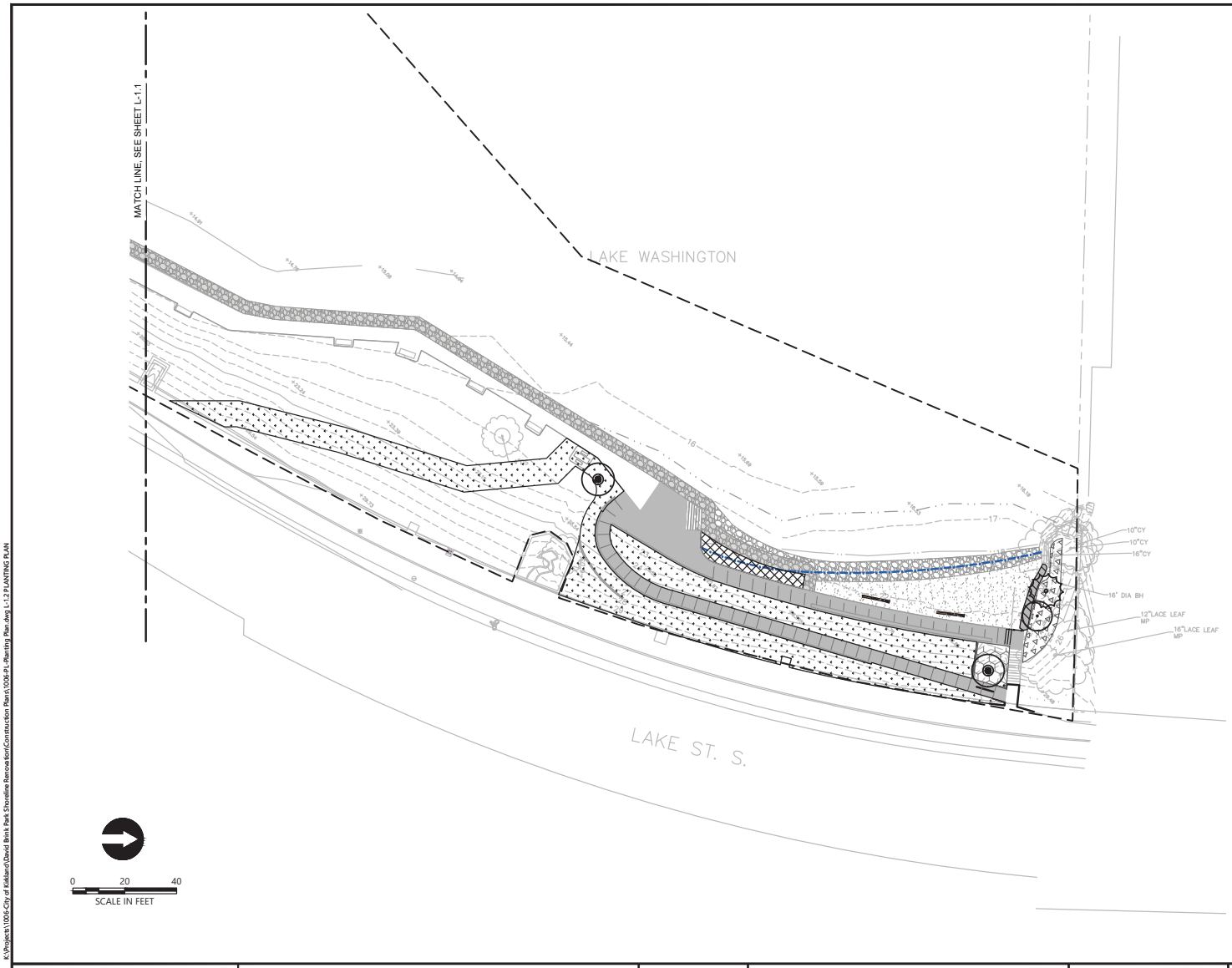

LEGEND:

- PARK BOUNDARY
- PROJECT LIMITS
- EXISTING CONTOUR
- EXISTING ORDINARY HIGH WATER MARK (OHWM)
- EXISTING ORDINARY LOW WATER MARK (OLWM)
- EXISTING TREE
- PROPOSED CONTOUR
- PROPOSED OHWM
- PROPOSED OLWM
- PROPOSED CONCRETE VIEWPOINT PATHWAY
- PROPOSED BEACH SAND
- PROPOSED HABITAT GRAVEL
- PROPOSED ROCKERY
- EXISTING BENCH TO REMAIN
- DRIFTWOOD
- NATIVE GROUNDCOVERS AND LOW SHRUBS - SHADE
- TREES
- LAWN RESTORATION AREA

NOTES:

1. HORIZONTAL DATUM: WASHINGTON STATE PLANE NORTH ZONE, NORTH AMERICAN DATUM OF 1983 (NAD83), U.S. SURVEY FEET
2. VERTICAL DATUM: NAVD 88
3. SURVEY PROVIDED BY STANTEC, INC IN MARCH 2019
4. BW ELEVATIONS ARE TO FINISH GRADE

ONE INCH
AT FULL SIZE, IF NOT ONE INCH SCALE ACCORDINGLY

SEPA SUBMITTAL
NOT FOR CONSTRUCTION

K:\Projects\006-City of Kirkland\David Brink Park Shoreline Renovation\Construction Plans\006-PL-Planting Plan.dwg L-1.2 PLANTING PLAN

Mar 31, 2020 11:47am dnewett

ANCHOR QEA

CITY OF KIRKLAND WASHINGTON

123 Fifth Ave
Kirkland, WA 98033
(425) 587-3300

REVISIONS

REV	DATE	BY	APP'D	DESCRIPTION

DESIGNED BY: A. SPOONER
DRAWN BY: C. WEE/C. HEWETT
CHECKED BY: P. HUMMEL
APPROVED BY: P. HUMMEL
SCALE: AS SHOWN
DATE: MARCH 2020

DAVID E. BRINK PARK SHORELINE RENOVATION

PLANTING PLAN - NORTH

L-1.2

SHEET # 26 OF 27

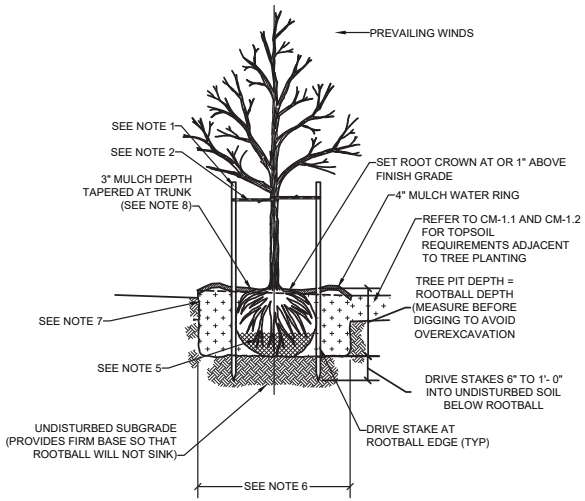

1 L-2 DECIDUOUS TREE PLANTING & STAKING
SCALE:NTS

NOTES:
1. STAKE TREES WITH (2) 2" DIAMETER (8'-0" LENGTH) LODGE POLE PINE OR DOUGLAS FIR STAKES.
2. CHAINLOCK TREE TIE. LOOP EACH TIE AROUND TREE LOOSELY TO PROVIDE 1" SLACK FOR DIAMETER GROWTH.
3. ONE STAKE PER TREE ON WINDWARD SIDE; SECOND STAKE ON LEEWARD SIDE.
4. REMOVE ALL WIRE, STRING, AND BURLAP.
5. SHAPE SOIL TO PROVIDE 5' DIAMETER OR TWO TIMES ROOTBALL DIAMETER, WHICHEVER IS GREATER, WATERING RING.
6. ROUGHEN SIDES OF PLANTING HOLE MAXIMIZE EXCAVATED AREA WITHOUT UNDERMINING ADJACENT PAVING/CURB.
7. MULCH AREA TO BE CLEAR OF GRASS, WEEDS, ETC. TO REDUCE COMPETITION WITH TREE ROOTS.

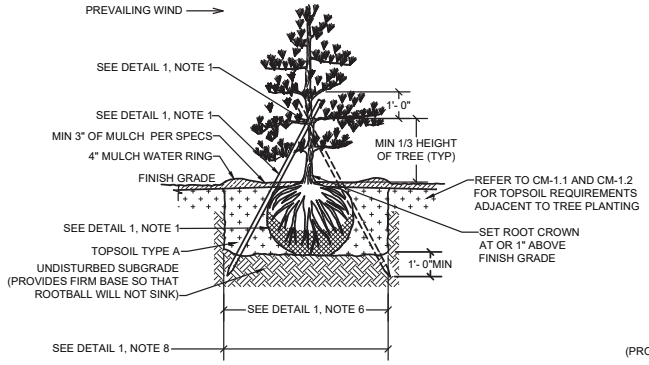

2 L-2 CONIFEROUS TREE PLANTING & STAKING
SCALE:NTS

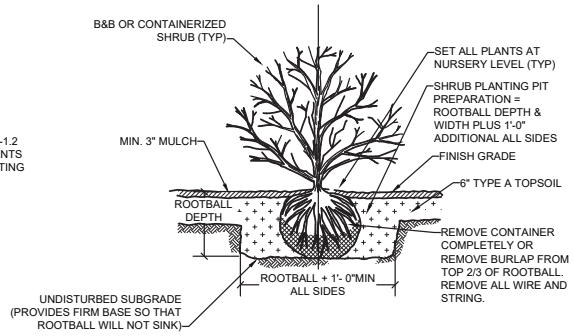

3 L-2 SHRUB PLANTING
SCALE:NTS

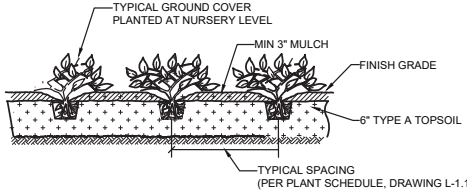

4 L-2 GROUNDCOVER, PERENNIAL, AND ORNAMENTAL GRASS PLANTING
SCALE:NTS

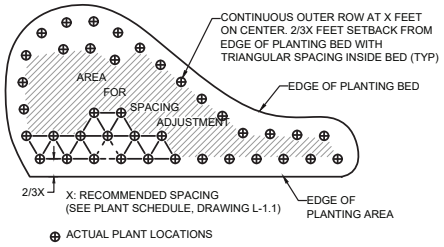

NOTES: APPLY PLANTING PATTERN FOR SHRUB AND GROUNDCOVER PLANTINGS

5 L-2 PLANTING PATTERN
SCALE:NTS

ONE INCH
AT FULL SIZE, IF NOT ONE INCH SCALE ACCORDINGLY

SEPA SUBMITTAL
NOT FOR CONSTRUCTION

K:\Projects\1006-City of Kirkland\David Brink Park Shoreline Renovation\Construction Plans\1006-PL-Planting Plan.dwg L-2 PLANTING DETAILS
Mar 31, 2020 11:47am dnewett

ANCHOR QEA

CITY OF KIRKLAND WASHINGTON
123 Fifth Ave
Kirkland, WA 98033
(425) 587-3300

REVISIONS

REV	DATE	BY	APP'D	DESCRIPTION

DESIGNED BY: A. SPOONER
DRAWN BY: C. WEE/C. HEWETT
CHECKED BY: P. HUMMEL
APPROVED BY: P. HUMMEL
SCALE: AS SHOWN
DATE: MARCH 2020

DAVID E. BRINK PARK SHORELINE RENOVATION

PLANTING DETAILS

L-2

SHEET # 27 OF 27

SEPA ENVIRONMENTAL CHECKLIST

A. Background [HELP]

1. Name of proposed project, if applicable:

David E. Brink Park Shoreline Renovation Project (Project)

2. Name of applicant:

City of Kirkland (City)

3. Address and phone number of applicant and contact person:

Applicant:

Brian Baker
City of Kirkland
123 5th Avenue
Kirkland, Washington 98033
bbaker@kirklandwa.gov
(425) 587-3874

Contact:

Josh Jensen
Anchor QEA, LLC
1201 3rd Avenue, Suite 2600
Seattle, Washington 98101
jjensen@anchorqea.com
(206) 903-3374

4. Date checklist prepared:

April 2, 2020

5. Agency requesting checklist:

City of Kirkland Planning Department

6. Proposed timing or schedule (including phasing, if applicable):

Project construction is anticipated to occur over a 3-month period beginning in or around fall 2021, once all permits and approvals are secured. All in-water work will be completed during the approved in-water work window for Lake Washington occurring between July 16 and March 15, or during an approved extension if requested. Overwater or upland activities may occur outside of the in-water work window.

7. Do you have any plans for future additions, expansion, or further activity related to or connected with this proposal? If yes, explain.

There are no future plans for addition, expansion, or further activity related to or connected with this proposal.

8. List any environmental information you know about that has been prepared, or will be prepared, directly related to this proposal.

The Project Description in Attachment 1 includes a brief description of existing environmental conditions. Other environmental information that has been prepared for the Project includes the following:

- Critical Areas Report (Attachment 2)
- Restoration and Permitting Form for Endangered Species Act (ESA) Compliance (Attachment 3)
- Cultural Resources Assessment (Attachment 4)
- *David E. Brink Park Shoreline Renovation Existing Information Summary Report* (Anchor QEA 2019)

9. Do you know whether applications are pending for governmental approvals of other proposals directly affecting the property covered by your proposal? If yes, explain.

The City is not aware of applications pending for government approval of other proposals directly affecting David E. Brink Park (Park).

10. List any government approvals or permits that will be needed for your proposal, if known.

The following government approvals or permits are anticipated to be required for the Project:

- U.S. Army Corps of Engineers (USACE) Nationwide Permits 3 and 27
- National Marine Fisheries Service and U.S. Fish and Wildlife Service ESA Section 7 and Magnuson-Stevens Fishery Conservation and Management Act Essential Fish Habitat Concurrence
- Washington State Department of Archaeology and Historic Preservation (DAHP) National Historic Preservation Act (NHPA) Section 106 Concurrence
- Washington State Department of Ecology Clean Water Act Section 401 Water Quality Certification
- Washington Department of Fish and Wildlife Hydraulic Project Approval
- City of Kirkland Shoreline Substantial Development Permit Exemption

11. Give brief, complete description of your proposal, including the proposed uses and the size of the project and site. There are several questions later in this checklist that ask you to describe certain aspects of your proposal. You do not need to repeat those answers on this page. (Lead agencies may modify this form to include additional specific information on project description.)

The City is proposing to repair aging shoreline infrastructure and provide habitat enhancements in the 1.5-acre Park on Lake Washington located at 555 Lake Street South in Kirkland, Washington (Attachment 1, Sheet 1 of the plan set). The Project will address

safety issues along the shoreline through a combination of repair, replacement, and removal of existing shoreline protection features as recommended in the *David E. Brink Park Shoreline Renovation Existing Information Summary Report* (Anchor QEA 2019). The Project will also enhance user experience by providing new access pathways that meet Americans with Disabilities Act (ADA) requirements. Proposed activities include the following:

- Removing 329 linear feet of existing concrete bulkhead and replacing a portion of the removed bulkhead with a 140-linear-foot vinyl sheetpile wall with concrete cap and pocket beach at the north end and basalt rockery, rock revetment, and pocket beach at the south end of the Park
- Removing 65 linear feet of the shoreline water access stairs south of the existing pier and replacing it with a shorter stair feature (approximately 38 linear feet)
- Replacing the existing 3,000-square-foot pier timber decking with a new grated decking
- Installing terraced rock walls and approximately 1,540 square feet of vegetated area behind the south end rockery with native low shoreline plantings
- Removing approximately 21 existing derelict timber piling near the shoreline
- Creating two new pocket beaches to open up approximately 2,517 square feet of aquatic habitat with native shoreline plantings
- Placing approximately 125 cubic yards of habitat gravel waterward of the shoreline protection features and pocket beaches (with approximately 125 cubic yards of shoreline cobble underlayment to support the habitat gravel)
- Constructing and repairing ADA-compliant public access pathways

Attachment 1 includes a complete Project Description.

12. Location of the proposal. Give sufficient information for a person to understand the precise location of your proposed project, including a street address, if any, and section, township, and range, if known. If a proposal would occur over a range of area, provide the range or boundaries of the site(s). Provide a legal description, site plan, vicinity map, and topographic map, if reasonably available. While you should submit any plans required by the agency, you are not required to duplicate maps or detailed plans submitted with any permit applications related to this checklist.

The Project is located at the Park on the shoreline of Lake Washington at 555 Lake Street South in Kirkland, Washington, in King County. The property is on King County parcel numbers 0825059133, 0825059143, and 0825059074 at the northwest quarter of Section 8, Township 25 North, Range 5 East. See the plan set in Attachment 1 for the legal description, site plan, vicinity map, topographic map, and other Project drawings.

B. Environmental Elements [HELP]

1. Earth [help]

a. General description of the site:

(circle one): Flat, rolling, hilly, steep slopes, mountainous, other _____

b. What is the steepest slope on the site (approximate percent slope)?

There are steep slopes at the face of the bulkheads where they sit perpendicular to the shoreline. The soils profile indicates that the site contains 6% to 15% slopes (NRCS 2020).

c. What general types of soils are found on the site (for example, clay, sand, gravel, peat, muck)? If you know the classification of agricultural soils, specify them and note any agricultural land of long-term commercial significance and whether the proposal results in removing any of these soils.

According to the U.S. Department of Agriculture Natural Resources Conservation Service, the underlying soils consist of Arents, Alderwood material, which is a gravelly sandy loam (NRCS 2020).

d. Are there surface indications or history of unstable soils in the immediate vicinity? If so, describe.

The Project is intended to address erosion occurring along the shoreline at the existing bulkheads.

e. Describe the purpose, type, total area, and approximate quantities and total affected area of any filling, excavation, and grading proposed. Indicate source of fill.

Upland excavation activities are required above the ordinary high water mark (OHWM) to prepare the Project area. These activities include removing existing bulkheads, rockeries, and water access stair. Rockery removal will include removing large boulders previously placed for shoreline protection. The areas behind the bulkheads in the north and south portions of the Project area will be excavated landward to support installation of pocket beaches. In total, approximately 491 cubic yards of upland excavation will occur as part of the Project.

Upland fill is required to support installation of the replacement bulkheads, rockery, revetment, and water access stair features and installation of the new pocket beaches. In total, approximately 211 cubic yards of material will be placed above OHWM. Fill will include reused soils from excavation or clean materials sourced from an approved off-site vendor.

f. Could erosion occur as a result of clearing, construction, or use? If so, generally describe.

Construction activities have the potential to cause erosion. However, all areas disturbed by Project construction would be stabilized as soon as possible to prevent erosion.

g. About what percent of the site will be covered with impervious surfaces after project construction (for example, asphalt or buildings)?

The Project includes shoreline modifications and constructing new and modified ADA-accessible trails in the Park that will reduce impervious surfaces by approximately 1,175 square feet for a net reduction of 2%. See Table 2 in the Project Description (Attachment 1) for a summary of proposed impervious surfaces.

h. Proposed measures to reduce or control erosion, or other impacts to the earth, if any:

All areas disturbed by Project construction would be stabilized as soon as possible to prevent erosion. The contractor would supply a Temporary Erosion and Sediment Control Plan to the Project Engineer. Additional best management practices (BMPs) to avoid or minimize impacts to the earth are described in the Project Description in Attachment 1.

The Project design was prepared consistent with the requirements for work within designated geologically hazardous areas, including landslide and liquefaction susceptibility areas. Geotechnical investigations of the shoreline area have been completed and this information has been incorporated into the Project design (Anchor QEA 2019). Supplemental geotechnical investigations are currently underway and will be summarized and provided to the City when available.

2. Air [help]

a. What types of emissions to the air would result from the proposal during construction, operation, and maintenance when the project is completed? If any, generally describe and give approximate quantities if known.

The Project will result in short-term emissions from the heavy equipment used to complete the proposed activities. No long-term emissions will result from the completed Project.

b. Are there any off-site sources of emissions or odor that may affect your proposal? If so, generally describe.

There are no off-site sources of emissions or odor that may affect the Project.

c. Proposed measures to reduce or control emissions or other impacts to air, if any:

The Project will adhere to applicable regulations for the reduction or control of emissions. Equipment will be inspected daily to ensure that uncontrolled emissions do not occur. Other BMPs will be implemented during construction as described in the Project Description in Attachment 1.

3. Water [help]

a. Surface Water: [help]

1. Is there any surface water body on or in the immediate vicinity of the site (including year-round and seasonal streams, saltwater, lakes, ponds, wetlands)? If yes, describe type and provide names. If appropriate, state what stream or river it flows into.

The Project is located on the shoreline of Lake Washington, a freshwater lake.

2. Will the project require any work over, in, or adjacent to (within 200 feet) the described waters? If yes, please describe and attach available plans.

The Project includes work over, in, and adjacent to (within 200 feet) of Lake Washington as described in the Project Description in Attachment 1. See the attached plan set (Attachment 1) for design details.

3. Estimate the amount of fill and dredge material that would be placed in or removed from surface water or wetlands and indicate the area of the site that would be affected. Indicate the source of fill material.

In-water excavation activities are required below OHWM to prepare the Project area. These activities include removing existing bulkheads, rockeries, and water access stair along the shoreline. Rockery removal will include removing large boulders previously placed for shoreline protection. In total, approximately 124 cubic yards of excavation will occur as part of the Project.

In-water fill is required to support installation of the replacement bulkheads, rockery, and water access stair features and installation of the new pocket beaches. Shoreline habitat gravel and a shoreline cobble underlayment (to support the habitat gravel) will also be placed waterward of these features to support juvenile salmonids that may utilize the nearshore. In total, approximately 547 cubic yards of material will be placed below OHWM. Fill will include reused soils from excavation or clean materials sourced from an approved off-site vendor or quarry.

4. Will the proposal require surface water withdrawals or diversions? Give general description, purpose, and approximate quantities if known.

The Project will not require any surface water withdrawals or diversions.

5. Does the proposal lie within a 100-year floodplain? If so, note location on the site plan.

The Project does not lie within a 100-year floodplain.

6. Does the proposal involve any discharges of waste materials to surface waters? If so, describe the type of waste and anticipated volume of discharge.

The Project does not involve any discharges of waste materials to surface waters.

b. Ground Water: [help]

1. **Will groundwater be withdrawn from a well for drinking water or other purposes? If so, give a general description of the well, proposed uses and approximate quantities withdrawn from the well. Will water be discharged to groundwater? Give general description, purpose, and approximate quantities if known.**

Groundwater will not be withdrawn or discharged as part of the Project.

2. **Describe waste material that will be discharged into the ground from septic tanks or other sources, if any (for example: Domestic sewage; industrial, containing the following chemicals. . . ; agricultural; etc.). Describe the general size of the system, the number of such systems, the number of houses to be served (if applicable), or the number of animals or humans the system(s) are expected to serve.**

Waste material will not be discharged into the ground from septic tanks or other sources.

c. Water runoff (including stormwater):

1. **Describe the source of runoff (including storm water) and method of collection and disposal, if any (include quantities, if known). Where will this water flow? Will this water flow into other waters? If so, describe.**

Water runoff within the Project area currently accumulates behind the existing bulkheads and either flows over the top of the bulkheads or infiltrates behind the bulkheads into Lake Washington. The completed Project will repair areas impacted by erosion, with no changes to existing flow entering Lake Washington.

2. **Could waste materials enter ground or surface waters? If so, generally describe.**

Materials from accidental spills associated with construction activities could potentially occur but will be avoided or minimized through implementation of BMPs.

3. **Does the proposal alter or otherwise affect drainage patterns in the vicinity of the site? If so, describe.**

The Project will not alter or affect drainage patterns at or adjacent to the property.

d. Proposed measures to reduce or control surface, ground, and runoff water, and drainage pattern impacts, if any:

BMPs will be implemented to avoid or minimize impacts to surface waters during construction as described in the Project Description in Attachment 1. Drainage patterns are not expected to significantly change from existing conditions.

4. Plants [help]

a. Check the types of vegetation found on the site:

_X_deciduous tree: alder, maple, aspen, other: see Attachment 2
____evergreen tree: fir, cedar, pine, other
_X_shrubs
_X_grass
____pasture
____crop or grain
____ Orchards, vineyards or other permanent crops.
____ wet soil plants: cattail, buttercup, bullrush, skunk cabbage, other
____water plants: water lily, eelgrass, milfoil, other
____other types of vegetation

There are no undisturbed native vegetation communities or sensitive resources (streams or wetlands) located within the Project area. The Project area is composed of open lawn and paved walking trails with small patches of ornamental trees and shrubs planted in some areas of the Park. The Critical Areas Report in Attachment 2 includes a detailed description of the types of vegetation in the Project area.

b. What kind and amount of vegetation will be removed or altered?

The Project includes removing and replacing existing landscaping along the shoreline. Ten trees will be planted to replace the up to 10 trees that will be removed during construction. Project construction activities will impact only existing landscaped vegetation.

c. List threatened and endangered species known to be on or near the site.

No ESA-listed plant species occur within the Project area.

d. Proposed landscaping, use of native plants, or other measures to preserve or enhance vegetation on the site, if any:

Native plants will be used to restore and enhance landscaped vegetation that is impacted during construction, as described in the Project Description in Attachment 1. The planting plan is included as Sheets 14 through 16 of Attachment 1.

e. List all noxious weeds and invasive species known to be on or near the site.

No noxious weeds or invasive species are known to be on or near the Project area.

5. Animals [help]

a. List any birds and other animals which have been observed on or near the site or are known to be on or near the site.

Examples include:

birds: hawk, heron, eagle, songbirds, other: see Attachment 2
mammals: deer, bear, elk, beaver, other:
fish: bass, salmon, trout, herring, shellfish, other: see Attachment 2

b. List any threatened and endangered species known to be on or near the site.

Three ESA-listed fish species occur in Lake Washington:

- Chinook salmon (*Oncorhynchus tshawytscha*)
- Puget Sound steelhead trout (*O. mykiss*)
- Bull trout (*Salvelinus confluentus*)

In addition, the U.S. Fish and Wildlife Service online information indicates that ESA-listed marbled murrelet (*Brachyramphus marmoratus*) may occur in the Project vicinity (USFWS 2020). However, marbled murrelets are more commonly associated with marine habitats instead of the freshwater habitat in the Project area. The urbanized Kirkland shoreline and recreational boat traffic on Lake Washington are unfavorable to marbled murrelets.

See the Critical Areas Report (Attachment 2) and Restoration and Permitting Form for ESA Compliance (Attachment 3) for more information on ESA-listed species.

c. Is the site part of a migration route? If so, explain.

The Project area is within the Pacific Flyway for migratory birds. During the migratory season, the area could conceivably be visited by migrating waterfowl. Fish (salmonids) are also known to migrate through Lake Washington.

d. Proposed measures to preserve or enhance wildlife, if any:

The Project proposes habitat enhancement features along the Lake Washington shoreline (including pocket beach installation and native riparian planting), removal of creosote-treated timber piles, and replacement of the existing pier's solid timber decking with grated, light-transmitting decking. These measures will improve habitat conditions for fish and wildlife species compared to existing conditions. BMPs that will be employed during construction to avoid or minimize potential adverse impacts to the aquatic environment are described in the Project Description in Attachment 1.

e. List any invasive animal species known to be on or near the site.

No invasive animal species are known to be in or near the Project area.

6. Energy and Natural Resources [help]

a. What kinds of energy (electric, natural gas, oil, wood stove, solar) will be used to meet the completed project's energy needs? Describe whether it will be used for heating, manufacturing, etc.

Fossil fuels will be used to power construction equipment. The completion of the Project will not change the facilities needed for energy or natural resources.

b. Would your project affect the potential use of solar energy by adjacent properties? If so, generally describe.

The Project will not affect the potential use of solar energy by adjacent properties.

c. What kinds of energy conservation features are included in the plans of this proposal? List other proposed measures to reduce or control energy impacts, if any:

No energy conservation features are included as part of the Project.

7. Environmental Health [help]

a. Are there any environmental health hazards, including exposure to toxic chemicals, risk of fire and explosion, spill, or hazardous waste, that could occur as a result of this proposal? If so, describe.

There are no environmental health hazards that could occur during operation of the Project. An unintentional release of fuel, lubricants, or hydraulic fluid from equipment could occur during construction.

1. Describe any known or possible contamination at the site from present or past uses.

There is no known contamination at the property from present or past uses.

2. Describe existing hazardous chemicals/conditions that might affect project development and design. This includes underground hazardous liquid and gas transmission pipelines located within the project area and in the vicinity.

There are no known existing hazardous chemicals or conditions that may affect the Project development or design.

3. Describe any toxic or hazardous chemicals that might be stored, used, or produced during the project's development or construction, or at any time during the operating life of the project.

No toxic or hazardous chemicals will be stored, used, or produced during the Project's development, construction, or at any time during the operating life of the Project.

4. Describe special emergency services that might be required.

It is unlikely that special emergency services would be required during or after Project construction.

5. Proposed measures to reduce or control environmental health hazards, if any:

BMPs will be implemented during construction to avoid or minimize potential environmental health hazards, such as an unintentional release of fuel, lubricants, or

hydraulic fluid from construction equipment, as described in the Project Description in Attachment 1.

b. Noise

1. What types of noise exist in the area which may affect your project (for example: traffic, equipment, operation, other)?

Existing noise in the area would not affect the Project.

2. What types and levels of noise would be created by or associated with the project on a short-term or a long-term basis (for example: traffic, construction, operation, other)? Indicate what hours noise would come from the site.

Short-term increases in noise may occur from construction activities, such as concrete removal and operation of heavy construction equipment. Work will take place during daytime hours. Long-term noise levels at the site would remain similar to existing levels after Project completion.

3. Proposed measures to reduce or control noise impacts, if any:

Construction activities will be performed in accordance with the limitations on development activity per Kirkland Zoning Code 115.25.

8. Land and Shoreline Use [help]

a. What is the current use of the site and adjacent properties? Will the proposal affect current land uses on nearby or adjacent properties? If so, describe.

The property is used as a public waterfront park. It encompasses 1.5 acres along Lake Washington and is one of the waterfront parks open year-round in Kirkland. The Park is a highly utilized green space with panoramic views to Lake Washington and Seattle. The Park is located in Kirkland's Moss Bay neighborhood and is bordered by condominiums to the south and north, Lake Street South to the east, and Lake Washington to the west. The Project would not affect current land uses on nearby properties.

b. Has the project site been used as working farmlands or working forest lands? If so, describe. How much agricultural or forest land of long-term commercial significance will be converted to other uses as a result of the proposal, if any? If resource lands have not been designated, how many acres in farmland or forest land tax status will be converted to nonfarm or nonforest use?

The Project area has not been used as working farmlands or forest lands.

1. Will the proposal affect or be affected by surrounding working farm or forest land normal business operations, such as oversize equipment access, the application of pesticides, tilling, and harvesting? If so, how:

The Project is located in an urban setting and is not surrounded by working farms or forest land.

c. Describe any structures on the site.

The Park includes a pathway loop that begins in the north with a 5-foot-wide concrete stair connecting Lake Street to the multi-use concrete path down to the shoreline. The

stair does not provide ADA-compliant universal access. The path follows the shoreline adjacent to the existing bulkhead towards the pier. The path continues to the south and continues up towards an ADA-compliant pathway switchback connecting to the Lake Street sidewalk.

An existing 15-foot by 20-foot concrete building, approximately 10 feet high, is located upland of the pier with an accessible door at the bottom of the sloped lawn area. The building was historically used by lifeguards for storage but is not currently used. The building is built into the slope and the rooftop is on grade with the adjacent Lake Street sidewalk. The rooftop is a publicly accessible viewing area with a perimeter guardrail and three benches. North of the rooftop deck along the Lake Street sidewalk, there is another overlook with a public art piece consisting of three cast bronze sculptures and a small water feature with low plantings.

The shoreline consists almost entirely of concrete bulkhead and rockeries. A 2014 shoreline structures assessment found that the shoreline structures at the Park range from "good" to "poor" and "very poor" conditions (AES 2014).

d. Will any structures be demolished? If so, what?

The existing bulkheads and water access stairs are in disrepair and will be demolished and replaced with new bulkheads, stairs, or pocket beaches (on the north and south ends of the Park).

e. What is the current zoning classification of the site?

The current zoning classification of the property is Park/Open Space (City of Kirkland 2019a).

f. What is the current comprehensive plan designation of the site?

The current comprehensive plan designation of the property is Park/Open Space (City of Kirkland 2019b).

g. If applicable, what is the current shoreline master program designation of the site?

The current shoreline master program designation of the property is Urban Conservancy (City of Kirkland 2020a).

h. Has any part of the site been classified as a critical area by the city or county? If so, specify.

The Project is located on Lake Washington, a fish and wildlife habitat conservation area and shoreline of statewide significance (City of Kirkland 2020b). The Project area is also located within a geologically hazardous area designated as a moderate to high susceptibility landslide area with high liquefaction potential (City of Kirkland 2020c, 2020d).

i. Approximately how many people would reside or work in the completed project?

No people will reside or work in the completed Project.

j. Approximately how many people would the completed project displace?

No people will be displaced by the completed Project.

k. Proposed measures to avoid or reduce displacement impacts, if any:

No people will be displaced by the completed Project; therefore, no measures to avoid or minimize displacement impacts are proposed.

l. Proposed measures to ensure the proposal is compatible with existing and projected land uses and plans, if any:

The Project will result in continued use of the property as a park, which is compatible with current and projected land uses and plans.

m. Proposed measures to reduce or control impacts to agricultural and forest lands of long-term commercial significance, if any:

The Project will not affect agricultural and forest lands of long-term commercial significance. Therefore, no measures are proposed.

9. Housing [help]

a. Approximately how many units would be provided, if any? Indicate whether high, middle, or low-income housing.

No housing units will be provided by the Project.

b. Approximately how many units, if any, would be eliminated? Indicate whether high, middle, or low-income housing.

No housing units will be eliminated by the Project.

c. Proposed measures to reduce or control housing impacts, if any:

There will be no impacts to housing; therefore, no measures to reduce or control impacts are proposed.

10. Aesthetics [help]

a. What is the tallest height of any proposed structure(s), not including antennas; what is the principal exterior building material(s) proposed?

No new structures are proposed as part of the Project. The replacement bulkheads and water access stairs will be approximately the same height and materials as existing features.

b. What views in the immediate vicinity would be altered or obstructed?

Views in the immediate vicinity of the site will not be obstructed or altered as a result of the Project.

c. Proposed measures to reduce or control aesthetic impacts, if any:

The Project activities are limited to the footprint of the Park facilities. No aesthetic impacts are anticipated from the Project; therefore, no measures to reduce or control aesthetic impacts are proposed.

11. Light and Glare [help]

a. What type of light or glare will the proposal produce? What time of day would it mainly occur?

There may be short-term light and glare from vehicles during construction in daylight hours.

b. Could light or glare from the finished project be a safety hazard or interfere with views?

Light or glare from the completed Project will not be a safety hazard or interfere with views.

c. What existing off-site sources of light or glare may affect your proposal?

No existing off-site sources of light or glare will affect the Project.

d. Proposed measures to reduce or control light and glare impacts, if any:

Because there are no proposed impacts, no measures are proposed to reduce or control light and glare impacts.

12. Recreation [help]

a. What designated and informal recreational opportunities are in the immediate vicinity?

The Project is located within a City-owned park that serves as a popular recreational resource and offers public access to Lake Washington.

b. Would the proposed project displace any existing recreational uses? If so, describe.

Recreational uses could be temporarily displaced in the immediate vicinity of the Project during construction. In the long term, the Project would enhance the area for recreational use.

c. Proposed measures to reduce or control impacts on recreation, including recreation opportunities to be provided by the project or applicant, if any:

Construction activities are expected to occur in the off-peak season for the Park to avoid or minimize potential impacts on recreation. Overall, the completed Project will expand access to the shoreline for all Park users and provide accessible and diverse activities to support the long-term character, use, and functionality of the Park.

13. Historic and Cultural Preservation [help]

a. Are there any buildings, structures, or sites, located on or near the site that are over 45 years old listed in or eligible for listing in national, state, or local preservation registers ? If so, specifically describe.

There are no buildings, structures, or sites eligible for preservation registers in or near the Project area. The nearest documented historic structures are two vessels moored in Lake Washington approximately 0.25 mile to the north. The nearest unevaluated structures older than 50 years are residences and businesses several parcels inland from the Park. The nearest archaeological sites are more than a mile inland.

b. Are there any landmarks, features, or other evidence of Indian or historic use or occupation? This may include human burials or old cemeteries. Are there any material evidence, artifacts, or areas of cultural importance on or near the site? Please list any professional studies conducted at the site to identify such resources.

An archaeological survey is underway that will assess the potential for archaeological materials and human remains. The survey is required for compliance with Section 106 of the NHPA, led by USACE. It will include subsurface testing.

c. Describe the methods used to assess the potential impacts to cultural and historic resources on or near the project site. Examples include consultation with tribes and the department of archeology and historic preservation, archaeological surveys, historic maps, GIS data, etc.

Potential impacts will be assessed in compliance with DAHP and USACE guidelines, and will be documented in a cultural resources survey report that will be completed prior to authorization of the Project.

d. Proposed measures to avoid, minimize, or compensate for loss, changes to, and disturbance to resources. Please include plans for the above and any permits that may be required.

If any impacts are identified, they will be mitigated through the NHPA Section 106 process.

14. Transportation [help]

a. Identify public streets and highways serving the site or affected geographic area and describe proposed access to the existing street system. Show on site plans, if any.

The Park is located on Lake Street South, a major public street that connects from State Route 520 to downtown Kirkland. See the site plans in Attachment 1.

b. Is the site or affected geographic area currently served by public transit? If so, generally describe. If not, what is the approximate distance to the nearest transit stop?

The Park is not directly served by public transit. The nearest stop is on 6th Street South, which is located approximately 0.1 mile to the west.

c. How many additional parking spaces would the completed project or non-project proposal have? How many would the project or proposal eliminate?

No parking spaces will be created or eliminated by the Project.

d. Will the proposal require any new or improvements to existing roads, streets, pedestrian, bicycle or state transportation facilities, not including driveways? If so, generally describe (indicate whether public or private).

The Project includes replacing the shoreline pathway at the Park's north end, creating a new ADA-compliant pathway spur at the south end pocket beach, and creating a new ADA-compliant pathway up the Park's slope. The new ADA-compliant pathway loop connection will retain existing open lawn space for picnicking and open view corridors.

e. Will the project or proposal use (or occur in the immediate vicinity of) water, rail, or air transportation? If so, generally describe.

The Project will not use water, rail, or air transportation.

f. How many vehicular trips per day would be generated by the completed project or proposal? If known, indicate when peak volumes would occur and what percentage of the volume would be trucks (such as commercial and nonpassenger vehicles). What data or transportation models were used to make these estimates?

No vehicular trips will be generated by the completed Project.

g. Will the proposal interfere with, affect or be affected by the movement of agricultural and forest products on roads or streets in the area? If so, generally describe.

The Project will not interfere with, affect, or be affected by the movement of agricultural or forest products on roads or streets in the area.

h. Proposed measures to reduce or control transportation impacts, if any:

The Project is not anticipated to result in impacts to transportation facilities; therefore, no measures to reduce or control impacts are proposed.

15. Public Services [help]

a. Would the project result in an increased need for public services (for example: fire protection, police protection, public transit, health care, schools, other)? If so, generally describe.

The proposed Project is not anticipated to create an increased need for public services.

b. Proposed measures to reduce or control direct impacts on public services, if any.

The Project is not anticipated to result in impacts to public services; therefore, no measures to reduce or control impacts are proposed.

16. Utilities [help]

a. Circle utilities currently available at the site:

electricity, natural gas, water, refuse service, telephone, sanitary sewer, septic system, other _____

b. Describe the utilities that are proposed for the project, the utility providing the service, and the general construction activities on the site or in the immediate vicinity which might be needed.

No utilities are proposed for the Project.

C. Signature [HELP]

The above answers are true and complete to the best of my knowledge. I understand that the lead agency is relying on them to make its decision.

Signature: _____

Name of signee Brian Baker

Position and Agency/Organization Senior Captial Projects Coordinator/ City of Kirkland

Date Submitted: 3/26/2020

REFERENCES CITED

AES (Associated Earth Sciences, Inc.), 2014. *Kirkland Parks Shoreline Structures Assessment*. Prepared for City of Kirkland Parks and Community Services Department. January 9, 2014.

Anchor QEA, 2019. *David E. Brink Park Shoreline Renovation Existing Information Summary Report*. Prepared for City of Kirkland Parks and Community Services and Public Works Department. May 2019.

City of Kirkland, 2019a. City of Kirkland Zoning Map. May 7, 2019.

City of Kirkland, 2019b. City of Kirkland Comprehensive Land Use Map. December 23, 2019.

City of Kirkland, 2020a. City of Kirkland Shoreline Environment Designations Map. January 6, 2020.

City of Kirkland, 2020b. City of Kirkland Sensitive Areas Map. January 3, 2020.

City of Kirkland, 2020c. City of Kirkland Landslide Susceptibility Map. February 5, 2020.

City of Kirkland, 2020d. City of Kirkland Liquefaction Potential Map. February 5, 2020.

NRCS (U.S. Department of Agriculture Natural Resources Conservation Service), 2020. "NRCS Web Soil Survey." Accessed: February 26, 2020. Available at: https://websoilsurvey.sc.egov.usda.gov/App/HomePage.htm

USFWS (U.S. Fish and Wildlife Service), 2020. "Endangered Species Act Status Reviews and Listing Information." Accessed February 18, 2020. Available at: https://ecos.fws.gov/ipac/.

Attachment 1
Project Description and Plan Set

ATTACHMENT 2
SEP20-00213

April 2020
David E. Brink Park Shoreline Renovation Project

ANCHOR QEA

Project Description

Prepared for City of Kirkland Parks and Community Services and Public Works Departments

April 2020
David E. Brink Park Shoreline Renovation Project

Project Description

Prepared for
City of Kirkland Parks and Community Services and Public Works Departments
123 5th Avenue
Kirkland, Washington 98033-6189

Prepared by
Anchor QEA, LLC
1201 3rd Avenue, Suite 2600
Seattle, Washington 98101

Project Number: 191006-01.02

TABLE OF CONTENTS

1 Introduction 1

2 Purpose 1

3 Location and Background 1

4 Existing Conditions 2

4.1 Reach 1 3
4.2 Reach 2 3
4.3 Pier 3
4.4 Reach 3 3
4.5 Reach 4 3
4.6 Habitat Conditions 7

5 Project Elements and Construction Methods 8

5.1 Bulkhead Replacement and Installation 8
5.2 Habitat Enhancement 10
5.3 Upland Activities 11
5.4 Project Timing and Schedule 13
5.5 Best Management Practices 13

6 References 14

TABLES

Table 1 Bulkhead Repair and Replacement Summary 10
Table 2 Impervious Surfaces Summary (square feet) 12

PHOTOGRAPHS

Photograph 1 View of sloped lawn area at Park's north end, viewed from the Lake Street sidewalk 4
Photograph 2 View of existing concrete building from the bottom of the sloped lawn area 4
Photograph 3 Naturally accumulating beach area at Reach 1 4
Photograph 4 Spalling concrete pathway along Reach 2 5
Photograph 5 Timber pier decking with lights and swim ladders 5
Photograph 6 Concrete stairs showing signs of differential settlement at Reach 3 6
Photograph 7 Collapsed portion of concrete bulkhead at Reach 4 6
Photograph 8 Naturally forming pocket beach at Reach 4 7

ATTACHMENTS

Plan Sheets

ABBREVIATIONS

ADA	Americans with Disabilities Act
BMP	best management practice
City	City of Kirkland
OHWM	ordinary high water mark
Park	David E. Brink Park
Project	David E. Brink Park Shoreline Renovation Project

1 Introduction

The City of Kirkland (City) is proposing to repair aging shoreline infrastructure and provide habitat enhancements as part of the David E. Brink Park Shoreline Renovation Project (Project). The Project is located at David E. Brink Park (Park) on Lake Washington at 555 Lake Street South in Kirkland, Washington (Sheet 1). The Project will address safety issues along the shoreline through a combination of repair, replacement, and removal of existing shoreline protection features as recommended in the *David E. Brink Park Shoreline Renovation Existing Information Summary Report* (Anchor QEA 2019). The Project will also enhance user experience by providing new access pathways that meet Americans with Disabilities Act (ADA) requirements. Proposed activities include the following:

- Removing and replacing a portion of the concrete bulkhead with a vinyl sheetpile wall with concrete cap at the north end and basalt rockery at the south end of the Park
- Removing and replacing the shoreline water access stairs south of the existing pier with a shorter stair feature
- Replacing the existing pier timber decking with a new grated decking
- Installing terraced rock walls, rock revetment, and vegetated areas behind the south end rockery with native low shoreline plantings
- Removing existing derelict piling near the shoreline
- Creating two new pocket beaches with native shoreline plantings
- Placing habitat gravel waterward of the shoreline protection features and pocket beaches
- Constructing ADA-compliant public access pathways

2 Purpose

The Park is located on Lake Washington and is one of the waterfront parks open year-round in Kirkland. The Park is a highly utilized green space with panoramic views to Lake Washington and Seattle. A 2019 shoreline structural assessment found the shoreline structures at the Park to be in critical condition in some areas along the existing bulkhead (BergerABAM 2019). The purpose of the Project is to address failing shoreline infrastructure, improve public access along the shoreline, and enhance nearshore habitat.

3 Location and Background

The 1.5-acre Park is located south of downtown Kirkland in Kirkland's Moss Bay neighborhood. The Park is along a popular pedestrian and bike corridor that runs along Lake Street and then Lake Washington Boulevard Northeast and links multiple City shoreline parks, including Marina Park to the north and Settler's Landing, Marsh Park, Houghton Beach Park, and Yarrow Bay wetlands to the south. The Cross Kirkland Corridor multiuse trail is located approximately 0.3 mile east of the Park.

The Park is a popular waterfront destination for visitors seeking to experience the expansive views of Lake Washington and Seattle. In 2014, the City conducted a shoreline structure assessment of the Kirkland shoreline parks. The study found portions of the Park's shoreline to be in "poor" to "very poor" condition (AES 2014). Therefore, maintaining the shoreline infrastructure to address safety and environmental concerns was identified as a high priority by the City.

The City conducted stakeholder and public engagement processes through the early design phases to support the Project and obtain feedback on the design. The City published an online open house for the Project in May 2019 to introduce the Project to the public and to receive feedback through the online forum. Early regulatory agency input was also obtained during a multiagency site visit in June 2019 to discuss the Project. The Project has also been presented to the City of Kirkland Park Board for initial comments and feedback. The primary feedback during the public process was to enhance ADA-compliant access with the provision of new ADA-compliant pathways, and to maintain views to the lake from the Park and neighbors by carefully designing planting locations and species. The City integrated public comments into the Project's final 30% design.

4 Existing Conditions

The Park is owned and maintained by the City. It is bordered by condominiums to the south and north, Lake Street South to the east, and Lake Washington to the west (Sheet 3). The Park includes 660 linear feet of Lake Washington shoreline.

The Park is characterized by its gentle slope immediately landward of the bulkhead along the Lake Washington shoreline. The slope steepens as it approaches Lake Street South (Photograph 1; Sheet 4; Sheet 5). The Park includes a pathway loop that begins in the north with a 5-foot-wide concrete stair connecting Lake Street to the multiuse concrete path down to the shoreline. The stair does not provide ADA-compliant universal access. The path follows the shoreline adjacent to the existing bulkhead toward the pier. The path continues to the south and up toward an ADA-compliant pathway switchback connecting to the Lake Street sidewalk.

An existing 15-foot by 20-foot concrete building, approximately 10 feet high, is located upland of the pier with an accessible door at the bottom of the sloped lawn area (Photograph 2). The building was historically used by lifeguards for storage but is not currently used. The building is built into the slope and the rooftop is on grade with the adjacent Lake Street sidewalk. The rooftop is a publicly accessible viewing area with a perimeter guardrail and three benches. North of the rooftop deck along the Lake Street sidewalk, there is another overlook with a public art piece consisting of three cast bronze sculptures and a small water feature with low plantings.

The shoreline consists almost entirely of concrete bulkhead and rockeries. A 2014 shoreline structures assessment found that the shoreline structures at the Park range from "good" to "poor"

and "very poor" condition (AES 2014). The assessment characterized the shoreline in four reaches and the pier, as described below. Refer to Sheets 4 and 5 for reach locations.

4.1 Reach 1

A cast-in-place concrete panel bulkhead extends 142 linear feet south from the northern property boundary, north of the existing pier (Photograph 3). This bulkhead was determined to be in "poor" condition due to large cracks and displaced concrete panels. Gravel and sand are naturally accreting waterward of the bulkhead, forming a pocket beach on the north end with rockery retaining a landscaped area along the north boundary.

4.2 Reach 2

Reach 1 ends and Reach 2 begins at a small offset of beach access stairs that extend into the water. An ecology block bulkhead in "good" condition runs 318 linear feet from the concrete stair structure at the north to the pier. The concrete surface pathway adjacent to the bulkhead face has a rough, exposed aggregate with spalling concrete in several areas and is in "moderate" condition (Photograph 4). City parks maintenance staff noted during a site visit that they perform maintenance on the bulkhead by replacing backfill material that pipes out of the bulkhead's toe over time.

4.3 Pier

A 12-foot-wide timber public pier extends approximately 160 feet into the lake and terminates at an expanded 1,400-square-foot platform that provides fishing access, informal bench seating for respite and viewing, and a swim ladder (Photograph 5). The pier structure is in good condition with portions of the timber decking appearing moderately weathered. The pier is supported by timber piles and the solid timber decking along the entirety of the pier does not currently allow for light penetration to the underlying aquatic environment.

4.4 Reach 3

South of the pier, Reach 3 includes a beach access stair that extends 65 linear feet along the shoreline and is supported by a concrete stepped bulkhead. The stepped bulkhead and stairs are showing signs of severe undermining and severe differential settlement, causing stair risers and treads to separate, and exhibiting flanking (erosion at the south end of the hard structure where the stairs end; Photograph 6).

4.5 Reach 4

The remaining 190 linear feet of shoreline south of the concrete stairs contains a failing concrete soldier pile bulkhead and is in "poor" condition. The southernmost section failed completely in winter 2019 and fell into the lake (Photograph 7). A small pocket beach has naturally formed behind a section of failed bulkhead in the middle section (Photograph 8).

Photograph 1
View of sloped lawn area at Park's north end, viewed from the Lake Street sidewalk

Photograph 2
View of existing concrete building from the bottom of the sloped lawn area

Photograph 3
Naturally accumulating beach area at Reach 1

Photograph 4
Spalling concrete pathway along Reach 2

Photograph 5
Timber pier decking with lights and swim ladders

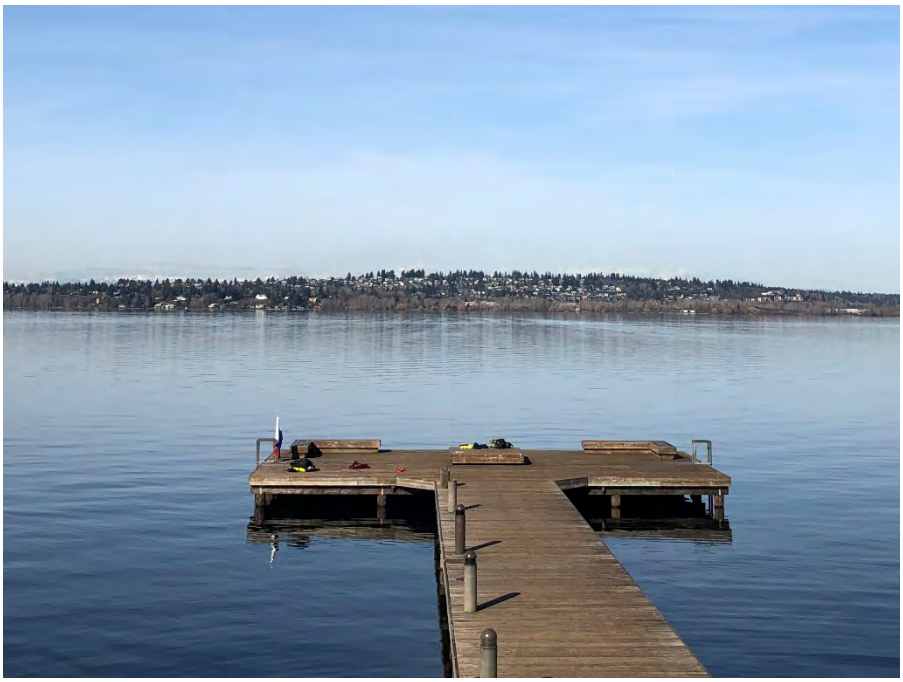

Photograph 6
Concrete stairs showing signs of differential settlement at Reach 3

Photograph 7
Collapsed portion of concrete bulkhead at Reach 4

Photograph 8
Naturally forming pocket beach at Reach 4

4.6 Habitat Conditions

The Park includes maintained grass lawn and planted shrubs and trees, primarily located along the shoreline. A 16-inch-diameter southern magnolia (*Magnolia grandiflora*) located at the site's northern boundary is surrounded by smaller, deciduous trees and shrubs and mulched planting beds along the boundary and concrete stairs. The north-central portion of the Park has one small, 4-inch-diameter deciduous tree. Upland of the small deciduous tree and along Lake Street, there are low and deciduous shrub and tree plantings associated with the artist sculptures and overlook. There are shrubs and small trees, including arborvitae, adjacent to the Park's building and stairs in the central portion of the site.

The southern shoreline has several landscaped planting beds with small, deciduous trees, shrubs, and perennials in three groupings. One grouping is located south of the concrete stairs and includes two large strawberry trees (*Arbutus unedo*). A second grouping is located along the naturally forming pocket beach (Photograph 8) and includes vine maple (*Acer circinatum*), dawn redwood (*Metasequoia glyptostroboides*), and a purple-leafed plum. The third and largest grouping of vegetation is along the southern property boundary and includes a large, 72-inch-diameter cluster of Lombardy poplar trees (*Populus nigra* var. *italica*).

Wildlife species observed during a site visit included bird species common in urban areas of King County: crows (*Corvus brachyrhynchos*), house sparrows (*Passer domesticus*), and gull species (*Larus* spp.). A dwarf maple tree was partially chewed, providing evidence of beaver (*Castor canadensis*) activity on the shoreline. No amphibian or reptile species, tracks, or signs were observed during the site visit (Anchor QEA 2019). Overall, the Park is completely managed with mowed grass and ornamental vegetation. Potential habitat is limited to the small patches of mostly ornamental vegetation. Wildlife use of the terrestrial habitat is likely dominated by disturbance-tolerant species typical of urban areas. Habitat surrounding the Park includes fragmented and disturbed areas associated with residential and commercial development.

Concrete bulkheads and stairs extend along the entire Lake Washington shoreline within the Park as described previously. Lake Washington is a large, freshwater lake that occupies approximately 34 square miles between the metropolitan cities of Seattle and Kirkland. The water levels in Lake Washington are seasonally managed by the U.S. Army Corps of Engineers to accommodate water usage, navigation, fish passage, and salinity control. Lake Washington is an important natural resource for fish and wildlife habitat. The lake shoreline serves as an important rearing area for threatened juvenile Chinook salmon *(Oncorhynchus tshawytscha)*, as well as supporting many other aquatic and wildlife species. The size, quality, and low elevation of Lake Washington are critical for providing excellent habitat for fish, particularly sockeye salmon *(O. nerka)*, which rear in lakes rather than rivers and which grow to unusually large size in Lake Washington.

In addition to Chinook and sockeye salmon, the Washington Department of Fish and Wildlife Priority Habitats and Species database documents the occurrence and migration of the following species in Lake Washington: coho salmon *(O. kisutch)*, Puget Sound steelhead *(O. mykiss)*, and Coastal Puget Sound bull trout *(Salvelinus confluentus;* WDFW 2020a, 2020b). Other fish species that are present in Lake Washington include coastal cutthroat trout (*O. clarkii clarkii*), largemouth and smallmouth bass (*Micropterus salmoides* and *M. dolomieu*), yellow perch (*Perca flavescens*), and black crappie (*Pomoxis nigromaculatus*).

5 Project Elements and Construction Methods

The following describes the proposed Project elements and anticipated construction methods, including best management practices (BMPs) to avoid or minimize potential environmental impacts during construction.

5.1 Bulkhead Replacement and Installation

The Project includes removing approximately 329 linear feet of existing concrete bulkhead to the north and the south of the existing pier (Sheet 12 and 13). This includes approximately 142 linear feet of existing concrete panel bulkhead and adjacent shoreline pathway within Reach 1 (the north end),

which will be removed to create approximately 110 linear feet of pocket beach area (measured along the ordinary high water mark [OHWM]; Sheet 13). In this location, the removed bulkhead will be replaced with 140 linear feet of vinyl sheetpile wall with a concrete cap that will abut the new shoreline pathway and connect to the existing shoreline pathway. The north portion of the pocket beach will also include approximately 30 linear feet of rock slope that will transition to the existing stairs and Reach 2 ecology block bulkhead, which is in good condition and will remain. Installation of the vinyl sheetpile wall will be through excavation and backfill. Backfill materials will then be compacted and prepared for the shoreline pathway and Park improvements.

The spalling concrete pathway in Reach 2 will be repaired with a new concrete surface. The associated Reach 2 concrete bulkhead is in a good location, but to reduce the loss of backfill material from piping out from this bulkhead, habitat gravel will be placed waterward of the bulkhead toe.

The existing concrete water access stairs in Reach 3, located south of the existing pier, will be removed and replaced. The new concrete stairs will be reduced from approximately 65 feet to 38 feet long. The removed concrete stair will be replaced with rockery to stabilize the shoreline (Sheets 17 and 18).

Approximately 187 linear feet of the concrete soldier pile bulkhead will be removed from Reach 4 to create the southern pocket beach (Sheet 12). The southern pocket beach will be accessible from the existing shoreline pathway loop with the installation of new steps (granite, pre-cast, or cast-in-place concrete) and a new ADA-compliant pathway spur. The southern pocket beach will be approximately 60 linear feet (measured along OHWM) and will be situated between rock revetment and rockery at the shoreline. Rockery will extend approximately 30 linear feet to the south of the new steps and rock revetment will be installed from the rockery to the south property boundary. Approximately 55 linear feet of rockery will extend to the north of the new steps, followed by 70 linear feet of rock revetment and 25 linear feet of rockery. Note that the new steps will be installed above OHWM.

Proposed work will primarily occur from the land; some barge-based work may also occur. Concrete will be removed using concrete saws, jackhammers, or similar equipment. Grading work will be performed using typical equipment, including dump trucks, front-end loaders, backhoes, and/or tracked excavators. Concrete will be installed using standard heavy equipment such as cement mixers, pavers, and dump trucks. Imported rock, woody debris, and habitat gravel or other substrate materials used for the pocket beaches will be brought to the site using dump trucks. Rock will be placed using either a backhoe or a tracked excavator.

Table 1 summarizes the proposed bulkhead removal and replacement activities, including fill quantities for proposed work above and below the OHWM.

Table 1
Bulkhead Repair and Replacement Summary

Element	Location	Approximate Amount of Fill Removed/Installed	
		Below OHWM	Above OHWM
Concrete panel bulkhead removal	Reach 1	32 cubic yards removal	n/a
Bulkhead rockery removal	Reaches 1 and 4	10 cubic yards removal	n/a
Concrete water access stair removal	Reach 3	42 cubic yards removal	6 cubic yards removal
Concrete soldier pile wall bulkhead removal	Reach 4	40 cubic yards removal	n/a
Pocket beach installation: excavation behind bulkheads	Reaches 1 and 4	n/a	485 cubic yards removal
Vinyl sheetpile wall with concrete cap installation	Reach 1, new pocket beach	n/a	12 cubic yards installation
Rock revetment installation	Reaches 1 and 4, new pocket beach	50 cubic yards installation	67 cubic yards installation
Shoreline cobble underlayment	Reaches 1, 2, 3, and 4	125 cubic yards installation	n/a
Shoreline habitat gravel installation	Reaches 1, 2, 3, and 4	125 cubic yards installation	n/a
Concrete water access stair replacement	Reach 3	50 cubic yards installation	6 cubic yards installation
Rockery installation at shoreline	Reaches 1 and 4	11 cubic yards installation	18 cubic yards installation
Rock terrace installation	Reach 4	n/a	43 cubic yards installation
Pocket beach installation: habitat gravel	Reaches 1 and 4	186 cubic yards installation	15 cubic yards installation
Pocket beach installation: beach sand	Reaches 1 and 4	n/a	50 cubic yards installation
	Total Removal	**124 cubic yards**	**491 cubic yards**
	Total Installation	**547 cubic yards**	**211 cubic yards**

5.2 Habitat Enhancement

The Project includes several habitat enhancement features including installing pocket beaches, placing habitat gravel and cobble underlayment (to support the habitat gravel layer) along the shoreline waterward of the shoreline protection features, replacing the existing pier solid timber decking with grated decking, and removing up to 21 creosote-treated timber piles located on the south end of the Park.

The pocket beaches (described earlier) will include approximately 2,517 square feet of aquatic habitat and approximately 1,540 square feet of new shoreline native planting at the south pocket beach.

Beach sand will be placed on top of the habitat gravel above OHWM, and two logs will be placed to provide seating at the north and south pocket beaches.

The gravel substrate placement activities will occur at the proposed pocket beaches. This includes placing approximately 186 cubic yards of 1-inch-minus gravel waterward of OHWM consistent with Washington Department of Fish and Wildlife requirements. Material will be placed using a tracked excavator or a front-end loader and bulldozer for beach gravel. Materials will be placed in the "dry," during low Lake Washington water-level periods of the year.

The Project also includes replacing approximately 3,000 square feet of solid timber pier decking with grated, light-transmitting decking (minimum 43% light transmission). This will allow light to be transmitted to the underlying aquatic habitat, improving conditions under and around the existing pier. Components will be delivered to the site by truck and installed from the upland with a land-based crane.

Other habitat and water quality considerations include removing up to 21 approximately 10-inch-diameter, derelict, creosote-treated timber piles associated with an old pier structure on the south end of the Park. Existing piles to be removed will be extracted according to the BMP standards provided by the Washington Department of Natural Resources (WDNR 2017). Piles will be removed by wrapping the pile with a chain and removing it with a crane or similar equipment. If a pile were to break above the mudline during removal, then an attempt would be made to pull the remainder of the pile in a way that minimizes disturbance of sediments; otherwise, it would be cut at or below the mudline.

5.3 Upland Activities

The Project proposes additional Park upland improvements including planting native vegetation along the shoreline, constructing ADA-compliant pathways, and maximizing view corridors by retaining lawn areas and adding a new viewpoint and lawn areas. Details of proposed upland Project elements are described as follows:

- Remove up to 10 shoreline trees and replace with 10 shoreline trees (refer to Sheets 6 and 7; Sheets 14 through 16).
- Install approximately 620 square feet of upland ornamental plantings.
- Place approximately 43 cubic yards (over 195 linear feet) of rock terrace.
- Place approximately 67 cubic yards (over 600 square feet) of rock revetment.
- Install new steps (granite, pre-cast, or cast-in-place) above OHWM to access the south pocket beach.
- Construct a new ADA-compliant pathway to the new viewpoint area at the south beach.
- Install a stepped concrete seatwall at the north beach.
- Replace the existing shoreline pathway at the north beach with a new concrete pathway.
- Construct a new ADA-compliant pathway to Lake Street.

- Repair approximately 2,320 square feet of existing concrete pathway along the existing concrete bulkhead.
- Create a new lawn area by the south pocket beach.

The Project includes replacing the shoreline pathway at the Park's north end, creating a new ADA-compliant pathway spur at the south end pocket beach, and creating a new ADA-compliant pathway up the Park's slope. The new ADA-compliant pathway loop connection will retain existing open lawn space for picnicking and open view corridors.

In order to construct the proposed pocket beaches and shoreline protection features, up to 10 trees located along the shoreline will be removed and replaced with 10 new trees. All trees planted within 10 horizontal feet of OHWM will be species native to the region (Sheet 16). At the southern pocket beach, approximately 43 cubic yards of terraced rock wall will be placed landward of the beach, and approximately 1,540 square feet of shoreline native low-growing vegetation will be planted between and behind the rock walls. New steps will be installed or cast-in-place above OHWM to connect the existing shoreline pathway to the new pocket beach. North of the new steps, a new approximately 65-foot ADA-compliant concrete pathway will lead to a new viewpoint overlooking the southern pocket beach. A new lawn will be located in the area between the new path and the existing pathway. Table 2 shows the total impervious surface area associated with each upland Project element.

Table 2
Impervious Surfaces Summary (square feet)

Project Element	Impervious Surface Removed	Impervious Surface Area Replaced	Impervious Surface Installed
Install new steps and path to steps	n/a	n/a	197
Construct new shoreline concrete pathway at north beach	-1,400	n/a	1,084
Construct new ADA-compliant pathway from north beach to Lake Street to create Park loop	n/a	n/a	953
Construct concrete retaining walls at north end of the Park	n/a	n/a	324
Repair concrete pathway along the existing concrete bulkhead along the northern shoreline	-2,320	2,320	n/a
Construct new pathway spur at south beach	n/a	n/a	275
Construct concrete water access stair and repair adjacent pathway	-1,121	863	n/a
Total Proposed Impervious Surface Removed, Replaced, or Installed	**-4,841**	**3,183**	**2,833**
Total Proposed Impervious Surface Net Change	**-1,175**		

5.4 Project Timing and Schedule

Project construction is anticipated to occur over a 3-month period beginning in or around fall 2021, once all permits and approvals are secured. All in-water work will be completed during the approved in-water work window for Lake Washington occurring between July 16 and March 15, or during an approved extension if requested. Overwater or upland activities may occur outside of the in-water work window.

5.5 Best Management Practices

To avoid or minimize potential adverse impacts to the aquatic environment, the following BMPs will be employed during construction:

- Applicable permits for the Project will be obtained prior to construction. Work will be performed according to the requirements and conditions of these permits.
- In-water activities will be conducted during low water levels to the extent practicable to avoid or minimize in-water work.
- In-water work (not including mobilization) will occur during the approved regulatory work window, or an approved extension of the work window, for Lake Washington in the Project area. The expected work window for listed/protected species at David E. Brink Park, Lake Washington, is July 16 through March 15.
- Construction of the proposed Project will comply with water quality requirements imposed by the Washington State Department of Ecology (Washington Administrative Code Chapter 173-201A).
- The contractor will be responsible for the preparation and implementation of a Spill Prevention, Control, and Countermeasures Plan to be used for the duration of the Project, which will include spill prevention, control, and response BMPs.
- The contractor will supply a Temporary Erosion and Sediment Control Plan (and/or a Construction Stormwater Pollution Prevention Plan that will use BMPs to prevent erosion and sediment-laden runoff from leaving the site) to the Project Engineer. The plan will be implemented prior to the start of ground-disturbing construction activities.
- Excess or waste materials will not be disposed of or abandoned waterward of the OHWM or allowed to enter nearby surface waters.
- Barges, if used for construction, will not be allowed to ground out during construction.
- The contractor will be required to retrieve any floating debris generated during construction using a skiff and a net. Debris will be disposed of at an appropriate upland facility.
- Demolition and construction materials will not be stored where upland runoff can cause materials to enter surface waters.
- No uncured concrete will be in contact with surface waters.

- No petroleum products, chemicals, or other toxic or deleterious materials will be allowed to enter surface waters.
- Existing piles will be removed as practicable, using best efforts, equipment preferences, and BMPs identified in the Washington Department of Natural Resources *Derelict Creosote Piling Removal Best Management Practices for Pile Removal & Disposal* (WDNR 2017).
- All creosote-treated materials will be disposed of in a landfill or recycling facility approved to accept these types of materials.

6 References

AES (Associated Earth Sciences, Inc.), 2014. *Kirkland Parks Shoreline Structures Assessment.* Prepared for City of Kirkland Parks and Community Services Department. January 9, 2014.

Anchor QEA, 2019. *David E. Brink Park Shoreline Renovation Existing Information Summary*. Prepared for City of Kirkland Parks and Community Services Department. May 2019.

BergerABAM, 2019. *David Brink Park – Waterfront Condition Assessment*. Prepared for Anchor QEA. March 2019.

WDFW (Washington Department of Fish and Wildlife), 2020a. "Priority Habitats and Species Maps." Accessed February 18, 2020. Available at: http://wdfw.wa.gov/mapping/phs/.

WDFW, 2020b. "SalmonScape." Accessed February 18, 2020. Available at: http://apps.wdfw.wa.gov/salmonscape/.

WDNR (Washington State Department of Natural Resources), 2017. *WDNR Derelict Creosote Piling Removal Best Management Practices for Pile Removal & Disposal.* January 25, 2017.

Plan Sheets

Provided as a separate PDF file

Attachment 2
Critical Areas Report

ATTACHMENT 2
SEP20-00213

April 2020
David E. Brink Park Shoreline Renovation Project

ANCHOR QEA

Critical Areas Report

Prepared for City of Kirkland Parks and Community Services and Public Works Departments

April 2020
David E. Brink Park Shoreline Renovation Project

Critical Areas Report

Prepared for
City of Kirkland Parks and Community Services and Public Works Departments
123 5th Avenue
Kirkland, Washington 98033-6189

Prepared by
Anchor QEA, LLC
1201 3rd Avenue, Suite 2600
Seattle, Washington 98101

Project Number: 191006-01.02

TABLE OF CONTENTS

1 Introduction 1
1.1 Statement of Accuracy 2
1.2 Review of Existing Information 2
2 Study Area Description 4
2.1 Topography 4
2.2 Soils 4
2.3 Hydrology 4
2.1 Plant Communities 5
3 Critical Areas Assessment 6
3.1 Methods 6
3.2 Wetlands 6
3.3 Streams 6
3.4 Fish and Wildlife Habitat Conservation Areas 7
3.4.1 Vegetation 7
3.4.2 Wildlife and Habitat 8
3.4.3 Lake Washington 8
3.4.4 Priority Species and Habitats 8
3.4.5 ESA-Listed Species and Critical Habitat 9
3.5 Frequently Flooded Areas 11
4 Critical Areas Impact Assessment 12
4.1 Fish and Wildlife Habitat Conservation Areas Assessment 12
5 References 14

TABLES

Table 1 Federally Listed Species that May Occur in the Study Area, with their ESA and Critical Habitat Status 10
Table 2 Federally Listed Species with Life History and Habitat Requirements that Do Not Occur in the Study Area, with their ESA and Critical Habitat Status 11

FIGURES

Figure 1 Vicinity Map
Figure 2 Aerial Photograph of Study Area
Figure 3 USDA NRCS Soils
Figure 4 National Wetlands Inventory

APPENDICES

Appendix A Project Description and Plan Set
Appendix B Restoration and Permitting Program Documentation

ABBREVIATIONS

ADA	Americans with Disabilities Act
CAR	Critical Areas Report
City	City of Kirkland
DPS	distinct population segment
ESA	Endangered Species Act
ESU	evolutionarily significant unit
FEMA	Federal Emergency Management Agency
KZC	Kirkland Zoning Code
NAVD88	North American Vertical Datum of 1988
NMFS	National Marine Fisheries Service
NRCS	Natural Resources Conservation Service
OHWM	ordinary high water mark
Park	David E. Brink Park
PHS	Priority Habitats and Species
Project	David E. Brink Park Shoreline Renovation Project
RAP	Restoration and Permitting
USACE	U.S. Army Corps of Engineers
USFWS	U.S. Fish and Wildlife Service
WDFW	Washington Department of Fish and Wildlife

1 Introduction

The City of Kirkland (City) Parks and Community Services Department is proposing to repair aging shoreline infrastructure and provide habitat enhancements as part of the David E. Brink Park Shoreline Renovation Project (Project). The Project is located at David E. Brink Park (Park) on Lake Washington at 555 Lake Street South in Kirkland, King County, Washington (Township 25 North, Range 5 East, Section 8). The Project will address safety issues along the shoreline through a combination of repair, replacement, and removal of existing shoreline protection features as recommended in the *David Brink Park Shoreline Renovation Existing Information Summary Report* (Anchor QEA 2019). The project will also enhance user experience by providing new access pathways that meet Americans with Disabilities Act (ADA) requirements. A vicinity map is shown in Figure 1 and an aerial photograph of the Project area is shown in Figure 2.

Proposed activities include the following:

- Removing and replacing a portion of the concrete bulkhead with a vinyl sheetpile wall with concrete cap at the north end and basalt rockery at the south end of the Park
- Removing and replacing the shoreline water access stairs south of the existing pier with a shorter stair feature
- Replacing the existing pier timber decking with a new grated decking
- Installing terraced rock walls, rock revetment, and vegetated areas behind the south end rockery with native low shoreline plantings
- Removing existing derelict piling near the shoreline
- Creating two new pocket beaches with native shoreline plantings
- Placing habitat gravel waterward of the shoreline protection features and pocket beaches
- Constructing ADA-compliant public access pathways

The Project Description and plan set, included in Appendix A, provide additional detail about the proposed Project activities.

This Critical Areas Report (CAR) has been prepared by Anchor QEA ecologists to support the local permitting and land use review of the Project. The CAR evaluates the presence of critical areas within the Project area and potential impacts to existing critical areas and associated regulated buffers as defined in the City of Kirkland Zoning Code (KZC) Chapter 90 (City of Kirkland 2020a). The format of this report has been prepared consistent with KZC 90.110. Critical areas regulated under KZC Chapter 90 include wetlands, streams, fish and wildlife habitat conservation areas, frequently flooded areas, and minor lakes.

Project ecologists gathered and reviewed existing information consistent with KZC Chapter 90 to identify and assess existing critical areas. To support this review, Anchor QEA ecologists performed a critical areas site visit at the Park on March 11, 2019. In addition to this CAR, several Project

documents have been prepared that describe the Project area and proposed Project elements and evaluate potential Project impacts. As described in Section 3, the assessment for Endangered Species Act (ESA)-listed species and critical habitats for this Project was performed under the Restoration and Permitting (RAP) program. Information from these companion documents is summarized or included by reference in this CAR. The companion documents include the following:

- *David Brink Park Shoreline Renovation Existing Information Summary Report* (Anchor QEA 2019)
- Project Description and plan set (Appendix A)
- Project RAP program documentation for ESA compliance (Appendix B)

A State Environmental Policy Act Checklist has also been prepared for the Project and is included with this CAR. This CAR is organized as follows:

- Section 1: Introduction
- Section 2: Study Area Description
- Section 3: Critical Areas Assessment
- Section 4: Critical Areas Impact Assessment
- Section 5: References

1.1 Statement of Accuracy

The information provided in this CAR has been prepared by professional ecologists using the best available science to provide an accurate evaluation of critical areas and potential impacts. This CAR documents that there are no wetlands or streams present at or nearby the Project area, and that Lake Washington does not qualify as a minor lake per KZC Chapter 90. Geologically hazardous areas will be evaluated in a geotechnical report prepared consistent with KZC Chapter 85 and provided under separate cover for City review.

1.2 Review of Existing Information

As part of the analysis to identify critical areas, Anchor QEA ecologists reviewed the following sources of information to support field observations:

- KZC (City of Kirkland 2020a)
- City of Kirkland public GIS mapping (City of Kirkland 2020b)
- *David Brink Park Shoreline Renovation Project Existing Information Summary Report* (Anchor QEA 2019)
- Federal Emergency Management Agency (FEMA) Flood Insurance Rate Maps for King County, Washington (FEMA 1995)
- King County iMap Interactive Mapping Tool (King County 2020)
- U.S. Department of Agriculture Natural Resources Conservation Service (NRCS) Web Soil Survey (NRCS 2020)

- National Marine Fisheries Service (NMFS) ESA status reviews and listing information (NMFS 2020)
- U.S. Fish and Wildlife Service (USFWS) Wetlands Mapper for National Wetlands Inventory (USFWS 2020a)
- USFWS ESA status reviews and listing information (USFWS 2020b)
- Washington Department of Fish and Wildlife (WDFW) Priority Habitats and Species Maps (WDFW 2020a)
- WDFW SalmonScape Mapper (WDFW 2020b)
- Aerial photographs publicly available via Google Earth

2 Study Area Description

The Study Area for this CAR includes the entire Park property where the Project is located. The Park encompasses 1.5 acres along the shoreline of Lake Washington (Figure 2). The Park consists of open lawn areas and paved walking trails with small patches of ornamental trees and shrubs. The shoreline of Lake Washington forms the west boundary of the Park. The east boundary of the Park is bounded by Lake Street South. Residential property is located north, south, and east of the Park. Photographs of the Study Area are included in the Project Description in Appendix A. No wetlands or streams are located in or adjacent to the Park, and therefore no on-site or off-site buffers are included as part of the Study Area per KZC 90.110(4).

The Project area, as described in the Project Description in Appendix A, is defined by the entire Lake Washington shoreline within the Park, the footprint of the existing pier, and the lawn and pathway areas at the north and south ends of the Park where pathway improvements are proposed.

2.1 Topography

The topography of the Study Area slopes from Lake Street South to the Lake Washington shoreline. There are steep slopes at the face of the bulkheads where they are perpendicular to the shoreline. Otherwise, slopes in the Study Area range from 6% to 15%, according to NRCS soil data (NRCS 2020). Topographic maps identify the elevation in the Study Area as between 16 and 29 feet, as shown on the plan set in Appendix A.

2.2 Soils

The underlying soils in the Study Area consist of Arents, Alderwood material, which is a gravelly sandy loam (NRCS 2020). NRCS mapped soils are shown in Figure 3.

2.3 Hydrology

The Study Area is located within the Cedar-Sammamish Basin, Water Resource Inventory Area 8 (Ecology 2020). Hydrologic characteristics in the Study Area are influenced by regional groundwater, direct precipitation, surface water runoff, and Lake Washington.

No stream channels, areas of inundation, or seeps were identified in Study Area during the existing conditions investigation (Anchor QEA 2019). WDFW Priority Habitats and Species (PHS) and SalmonScape data do not identify any freshwater surface stream channels to Lake Washington within the Study Area (WDFW 2020a, 2020b). Lake Washington does not qualify as a minor lake under KZC Chapter 90. Because Lake Washington is hydraulically controlled by the U.S. Army Corps of Engineers (USACE), the Study Area is not located within a FEMA-designated floodplain (FEMA 1995) and does not qualify as a frequently flooded area under KZC Chapter 90.

2.1 Plant Communities

There are no undisturbed native vegetation communities located within the Study Area. The Study Area is composed of open lawn areas and paved walking trails, with small patches of planted native and ornamental trees and shrubs. The majority of the plantings are shrubs and ground cover species. All areas with trees and shrubs have a ground cover of mulch several inches thick, and it appears that regular maintenance is performed because no grass or herbaceous vegetation was growing within the mulch. Photographs of the Study Area are included in the Project Description in Appendix A. Existing plant species within the Study Area are described in Section 3.4.1.

The USFWS National Wetlands Inventory (USFWS 2020a), WDFW PHS data (WDFW 2020a), King County critical area maps (2020), and City sensitive areas maps (City of Kirkland 2020b) do not identify any freshwater wetland habitat within the Study Area (see Figure 4 for National Wetlands Inventory results). Anchor QEA ecologists did not identify any freshwater wetlands in the study area during the field investigation in March 2019.

3 Critical Areas Assessment

This section describes and assesses critical areas within and near the Study Area as defined per KZC Chapter 90 (City of Kirkland 2020a), including wetlands, streams, fish and wildlife habitat conservation areas, and frequently flooded areas. Lake Washington does not qualify as a minor lake per KZC Chapter 90, and therefore minor lakes are not evaluated further in this CAR.

3.1 Methods

To document and describe wetlands, streams, fish and wildlife habitat conservation areas, and frequently flooded areas within the Study Area, Anchor QEA reviewed existing information (Section 1.2) and performed an aerial photograph assessment. Anchor QEA ecologists performed a critical areas site visit at the Study Area on March 11, 2019, as part of the analysis for the Project *Existing Information Summary Report* (Anchor QEA 2019). The entire Study Area was accessible during the investigation. During the 2019 site visit, Anchor QEA ecologists documented general information regarding habitats and dominant plant species and communities. Potential wetland features were evaluated based on KZC wetland delineation criteria; however, no wetland conditions were observed.

The ordinary high water mark (OHWM) of Lake Washington was not delineated during the site visit because Lake Washington is hydraulically controlled, and the low- and high-water elevations are established. All wildlife species, tracks, and other signs observed during the site visit were documented. All observations were qualitative; no quantitative wildlife surveys were performed. Photographs taken to document vegetation and habitat conditions are included in Appendix A.

This CAR evaluates terrestrial and aquatic habitats and plant communities based on physical observations and using the existing information described in Section 1.2. WDFW-documented species and priority habitats and ESA-listed species and critical habitats within and near the Study Area are also evaluated.

3.2 Wetlands

No wetland conditions were observed by ecologists within the Study Area during the 2019 site visit (Anchor QEA 2019). Additionally, USFWS National Wetland Inventory data (Figure 4; USFWS 2020a), WDFW PHS data (WDFW 2020a), King County (2020) critical area maps, and City sensitive areas maps (City of Kirkland 2020b) do not identify wetland areas within at least 1,500 feet of the Study Area. No further evaluation of wetlands is provided in this CAR.

3.3 Streams

No streams, drainage channels, areas of inundation, seeps, or associated riparian habitat were observed by ecologists within the Study Area during the March 2019 site visit (Anchor QEA 2019). Additionally, WDFW PHS data (WDFW 2020a), SalmonScape data (WDFW 2020b), and City sensitive

areas maps (City of Kirkland 2020b) do not identify any stream channels within 2,000 feet of the Study Area. King County critical area maps (King County 2020) identify unclassified stream channels about 1,000 feet north and 1,000 feet south of the Study Area, but they are not located within the Study Area and will not be affected by the Project. No further evaluation of streams is provided in this CAR.

3.4 Fish and Wildlife Habitat Conservation Areas

Per KZC 90.95, fish and wildlife habitat conservation areas are areas that provide important nesting territory as well as spawning and protection areas for state and federally listed endangered, threatened, and sensitive species that have a primary association with that habitat area and state priority habitats that include species of local importance. Lake Washington is a fish and wildlife habitat conservation area under the KZC. No fish and wildlife habitat conservation areas are located within the Study Area inland of the lake shoreline.

3.4.1 Vegetation

There are no undisturbed native vegetation communities located within the Study Area. The Study Area is composed of open lawn and paved walking trails with small patches of ornamental trees and shrubs planted in some areas of the Park. The majority of the plantings are shrubs and ground cover species. A 16-inch-diameter southern magnolia (*Magnolia grandiflora*) is located at the Park's northern boundary; it is surrounded by smaller, deciduous trees and shrubs and mulched planting beds along the boundary and concrete stairs. The north-central portion of the Park has one small, 4-inch-diameter deciduous tree. Upland of the small deciduous tree and along Lake Street, there are low and deciduous shrub and tree plantings associated with the artist sculptures and overlook. There are shrubs and small trees including arborvitae adjacent to the Park's building and stairs in the central portion of the site.

The southern shoreline has several landscaped planting beds with small, deciduous trees, shrubs, and perennials in three groupings. One grouping is located south of the concrete stairs and includes two large strawberry trees (*Arbutus unedo*). A second grouping is located along the naturally forming pocket beach and includes vine maple (*Acer circinatum*), dawn redwood (*Metasequoia glyptostroboides*), and a purple-leafed plum. The third and largest grouping of vegetation is along the southern property boundary and includes a large, 72-inch-diameter cluster of Lombardy poplar trees (*Populus nigra* var. *italica*). Other native species observed included Nootka rose (*Rosa nutkana*) and sword fern (*Polystichum munitum*). Photographs of vegetation in the Project area are included in Appendix A.

3.4.2 Wildlife and Habitat

The entire Study Area includes a managed landscape with mowed grass and ornamental vegetation. Potential habitat is limited to the small patches of mostly ornamental vegetation located throughout the Park, mostly near the shoreline. Wildlife use of the terrestrial habitat is likely dominated by disturbance-tolerant species typical of urban areas. Habitat surrounding the Park includes fragmented and disturbed areas associated with residential and commercial development. Wildlife species observed during the March 2019 site visit included bird species common in urban areas of King County, including crows (*Corvus brachyrhynchos*), house sparrows (*Passer domesticus*), and gull species (*Larus* spp.). No amphibian, reptile, or mammal species, tracks, or signs were observed during the March 2019 site visit.

The aquatic habitat of Lake Washington provides quality habitat for aquatic species, as described in Section 3.4.3, but in general, lake shoreline riparian habitat is of low quality within and in the vicinity of the Study Area.

3.4.3 Lake Washington

Lake Washington is a fish and wildlife habitat conservation area and a shoreline of statewide significance per KZC Chapters 83 (Shoreline Management) and 90 (Critical Areas). The OHWM of Lake Washington was not delineated during the March 2019 site visit because the lake is hydraulically controlled by the U.S. Army Corps of Engineers (USACE) at the Hiram M. Chittenden Ballard Locks. USACE lowers the lake in the winter months (typically in December) to a low-water elevation of 16.67 feet North American Vertical Datum of 1988 (NAVD88) to allow for flood storage. In the summer (typically in June), the lake level is raised to a high-water elevation of 18.67 feet NAVD88. Therefore, the Project defines the OHWM as 18.67 feet NAVD88 and the ordinary low water mark as 16.67 feet NAVD88. The KZC Chapter 83.80 identifies the high-water elevation of Lake Washington as 18.5 feet NAVD 88 (City of Kirkland 2020a).

Lake Washington provides habitat for a variety of aquatic species. Fish species occurrence and migration documented in Lake Washington according to the WDFW PHS and SalmonScape websites (WDFW 2020a, 2020b) include bull trout (*Salvelinus confluentus*), Chinook salmon (*Oncorhynchus tshawytscha*), Puget Sound steelhead (*O. mykiss*), sockeye salmon (*O. nerka*), and coho salmon (*O. kisutch*). Other fish species that are present in Lake Washington include coastal cutthroat trout (*O. clarkii clarkii*), largemouth and smallmouth bass (*Micropterus salmoides* and *M. dolomieu*), yellow perch (*Perca flavescens*), and black crappie (*Pomoxis nigromaculatus*).

3.4.4 Priority Species and Habitats

The WDFW PHS data (WDFW 2020a) do not document occurrences of any terrestrial species or priority habitats in the Study Area or within 3,000 feet of the Park. Fish species documented in Lake

Washington according to the WDFW PHS and SalmonScape websites are described in Section 3.4.3. Analysis of federally listed species and critical habitats protected under the ESA, as identified by USFWS and NMFS, is described in Section 3.4.5, and associated ESA documentation is included in Appendix B.

3.4.5 ESA-Listed Species and Critical Habitat

The assessment for ESA-listed species and critical habitats for this Project was performed under the NMFS RAP program. The RAP program was developed by NMFS to streamline ESA Section 7 compliance for pier and shoreline projects in Lake Washington and Lake Sammamish. RAP is a voluntary program that promotes shoreline habitat restoration and environmentally friendly pier and shoreline designs. The Project is consistent with the requirements identified in the RAP program for activities on the lake shoreline, in the lake nearshore, and below the OHWM, as described in the RAP Implementation Guide (NMFS 2019).

The following subsections describe ESA-listed species and critical habitats that may occur in the vicinity of the Study Area. The ESA-listed species and critical habitats impact assessment in Section 4.1 provides a summary of the RAP analysis and results. The RAP analysis forms and tables are included in Appendix B.

ESA-listed species and critical habitats under NMFS and USFWS jurisdiction in western Washington are referenced on the agencies' websites. The NMFS identifies ESA-listed species that occur or may occur within a broad geographic area, such as an evolutionarily significant unit (ESU) or a distinct population segment (DPS), rather than a project-specific location (NMFS 2020). The USFWS identifies ESA-listed species that occur or may occur within a specific location where a project is proposed (USFWS 2020b).

3.4.5.1 Federally Listed Species that May Occur in the Study Area

The February 2020 status of federally listed species and critical habitats protected under the ESA that occur or may occur within the Study Area is presented in Table 1. As shown in Table 1, four ESA-listed species occur or may occur within the Study Area, primarily in Lake Washington. Of these species, three are aquatic (fish) and one is terrestrial (bird). No ESA-listed plant or insect species are identified as potentially occurring within the Study Area. Designated critical habitat for all four species is present within King County. However, critical habitat for marbled murrelet (*Brachyramphus marmoratus*) does not occur within the Study Area due to lack of suitable habitat.

Table 1
Federally Listed Species that May Occur in the Study Area, with their ESA and Critical Habitat Status

Species	Status	Agency	Critical Habitat
Salmonids			
Chinook salmon (*Oncorhynchus tshawytscha*)	Threatened (Puget Sound ESU)	NMFS	Designated
Puget Sound steelhead trout (*Oncorhynchus mykiss)*	Threatened (Puget Sound ESU)	NMFS	Designated
Bull trout (*Salvelinus confluentus*)	Threatened (Puget Sound DPS)	USFWS	Designated
Birds			
Marbled murrelet *(Brachyramphus marmoratus*)	Threatened	USFWS	Designated (does not include Study Area)

The following discussion provides an assessment of the potential presence of ESA-listed species and habitats within the Study Area.

3.4.5.1.1 ESA-Listed Fish Species

All three of the ESA-listed fish species identified in Table 1 are documented in Lake Washington and are known to occur or potentially occur in the vicinity of the Study Area. The freshwater habitat of Lake Washington is within designated critical habitat for Chinook salmon, steelhead, and bull trout. Chinook salmon spawning habitat is not documented to occur along the stretch of shoreline adjacent to the Park (Rohloff 2019).

3.4.5.1.2 ESA-Listed Terrestrial Species

Marbled murrelets are more commonly associated with marine habitat instead of the freshwater habitat in the Study Area. The urbanized Kirkland shoreline and recreational boat traffic on Lake Washington are unfavorable to marbled murrelets.

3.4.5.2 Federally Listed Species that Do Not Occur in the Study Area

There are four ESA-listed or proposed species identified by the USFWS as potentially occurring in the Study Area; however, these species do not occur in the vicinity of the Study Area based on the species' life history and habitat requirements. These species are identified in Table 2.

Table 2
Federally Listed Species with Life History and Habitat Requirements that Do Not Occur in the Study Area, with their ESA and Critical Habitat Status

Species	Status	Agency	Critical Habitat
Mammals			
Gray wolf (Canis *lupus*)	Proposed Endangered	USFWS	None designated or proposed
Wolverine (*Gulo gulo luscus*)	Proposed Threatened	USFWS	None designated or proposed
Birds			
Streaked horned lark (*Eremophila alpestris strigata)*	Threatened	USFWS	Designated (does not include Study Area)
Yellow-billed cuckoo (*Coccyzus americanus)*	Threatened	USFWS	Proposed (does not include Study Area)

Potential habitat for the four ESA-listed terrestrial species identified in Table 2 (gray wolf, wolverine, streaked horned lark, and yellow-billed cuckoo) is not located within many miles of the Study Area due to urban development. Additionally, these species are not typically associated with areas of human activity except in rare, usually temporary, circumstances.

3.5 Frequently Flooded Areas

As described in Section 3.4.3, Lake Washington water levels are managed and maintained by the USACE at the Ballard Locks in the winter months to a low-water elevation of 16.67 feet NAVD88. In the summer, the lake level is raised to a high-water elevation of 18.67 feet NAVD88. Since Lake Washington is hydraulically controlled by the USACE, the Park does not qualify as a frequently flooded area and no further evaluation is provided in this CAR.

4 Critical Areas Impact Assessment

This section provides a summary of potential impacts to fish and wildlife habitat conservation areas, which are identified as the sole type of critical area within the Study Area and potentially affected by the Project per KZC Chapter 90.

4.1 Fish and Wildlife Habitat Conservation Areas Assessment

The primary potential construction impact on fish and wildlife species and associated habitat is temporary removal and loss of habitat. Project construction activities will not occur in areas with undisturbed native vegetation communities or sensitive resources (streams or wetlands). Ten trees will be planted to replace the up to 10 trees that would be removed during construction. The Project is not expected to impact undisturbed wildlife habitat and will not have measurable short-term or long-term impacts on wildlife species.

Noise associated with construction activities could result in avoidance behavior by some wildlife species, if they are present. However, the Study Area is a popular park that experiences ongoing human disturbance, and it is expected that wildlife would resume use of the Park once construction is complete. Noise levels associated with operation of the Park after construction are expected to be consistent with current ambient noise levels.

The Project includes several habitat enhancement measures including creation of pocket beaches, placement of habitat gravel waterward of the shoreline protection features, removal of creosote-treated timber piles, and replacement of the existing pier's solid timber decking with grated, light-transmitting decking. These measures will improve Lake Washington shoreline habitat and water quality conditions for fish and wildlife species compared to existing conditions. All in-water work will be completed during the approved in-water work window for Lake Washington to reduce potential impacts on fish species.

Overall, the Project will not result in measurable potential impacts on ESA-listed species or critical habitats, and the restoration activities will improve shoreline and aquatic habitat and water quality conditions compared to existing conditions. The Project will result in long-term habitat improvements in the freshwater aquatic habitat of Lake Washington. The proposed Project elements meet the RAP guidelines for the assessment for ESA-listed species and critical habitats. As presented in the RAP analysis, only one tree species from the RAP plant list will be planted as part of the Project due to neighborhood concerns about tree heights in the Park. Five shrub species from the RAP plant list will be planted as part of the Project design. The RAP analysis is presented in Appendix B.

Based on the proposed Project elements, if an ESA biological evaluation was performed for this Project instead of the RAP analysis, the effect determination for Chinook salmon, steelhead, and bull

trout species and critical habitats would likely be “may affect, not likely to adversely affect.” The effect determination for marbled murrelet would likely be “no effect.”

In summary, the Project is located within an urban Park with no undisturbed native vegetation communities or associated wildlife habitat, and therefore impacts to those features are not anticipated. The Project proposes habitat enhancement features along the Lake Washington shoreline (including pocket beach installation, placing shoreline habitat gravel, and native riparian planting), removal of creosote-treated timber piles, and replacement of the existing pier’s solid timber decking with grated, light-transmitting decking. These measures will improve habitat conditions for fish and wildlife species compared to existing conditions. Best management practices that will be employed during construction to avoid or minimize potential adverse impacts on the aquatic environment are described in the Project Description in Appendix A.

5 References

Anchor QEA, 2019. *David Brink Park Shoreline Renovation Existing Information Summary Report*. Prepared for City of Kirkland Parks and Community Services and Public Works Departments. March 2019.

City of Kirkland, 2020a. "City of Kirkland Zoning Code." Accessed February 18, 2020. Available at: https://www.codepublishing.com/WA/Kirkland/.

City of Kirkland, 2020b. "City of Kirkland GIS Maps Sensitive Areas." Accessed February 18, 2020. Available at: https://www.kirklandwa.gov/Assets/IT/GIS/Sensitive+Areas+Map.pdf.

Ecology (Washington State Department of Ecology), 2020. "Environmental Information; Water Resource Inventory Area Maps, Cedar-Sammamish Basin WRIA 8." Accessed February 18, 2020. Available at: https://fortress.wa.gov/dfw/score/score/maps/map_details.jsp?geocode=wria&geoarea=WRIA08_Cedar_Sammamish.

FEMA (Federal Emergency Management Agency), 1995. FEMA Federal Insurance Rate Map for King County, Washington and Unincorporated Areas. Map Number 53033C0365F; Panel 365 of 1,725. May 16, 1995.

King County, 2020. "King County iMap Interactive Mapping Tool." Accessed February 18, 2020. Available at: https://gismaps.kingcounty.gov/iMap/.

NMFS (National Marine Fisheries Service), 2019. *Implementation Guide for Restoration and Permitting (RAP) for Lake Washington and Lake Sammamish Instructions for Applicants*. July 2019.

NMFS, 2020. "Endangered Species Act Status Reviews and Listing Information." Accessed February 18, 2020. Available at: http://www.westcoast.fisheries.noaa.gov/protected_species/salmon_steelhead/salmon_and_steelhead.html.

NRCS (U.S. Department of Agriculture Natural Resources Conservation Service), 2020. "Natural Resources Conservation Service (NRCS) Web Soil Survey." Accessed February 18, 2020. Available at: http://websoilsurvey.nrcs.usda.gov/app.

Rohloff, Ezekiel (Washington Department of Fish and Wildlife), 2019. Personal communication with City of Kirkland and Anchor QEA staff. June 17, 2019.

USFWS (U.S. Fish and Wildlife Service), 2020a. "Wetlands Mapper for National Wetlands Inventory." Accessed March 2, 2020. Available at: https://www.fws.gov/wetlands/

USFWS, 2020b. "Endangered Species Act Status Reviews and Listing Information." Accessed February 18, 2020. Available at: https://ecos.fws.gov/ipac/.

WDFW (Washington Department of Fish and Wildlife), 2020a. "Priority Habitats and Species Maps." Accessed February 18, 2020. Available at: http://wdfw.wa.gov/mapping/phs/.

WDFW, 2020b. "SalmonScape." Accessed February 18, 2020. Available at: http://apps.wdfw.wa.gov/salmonscape/.

Critical Areas Report Figures

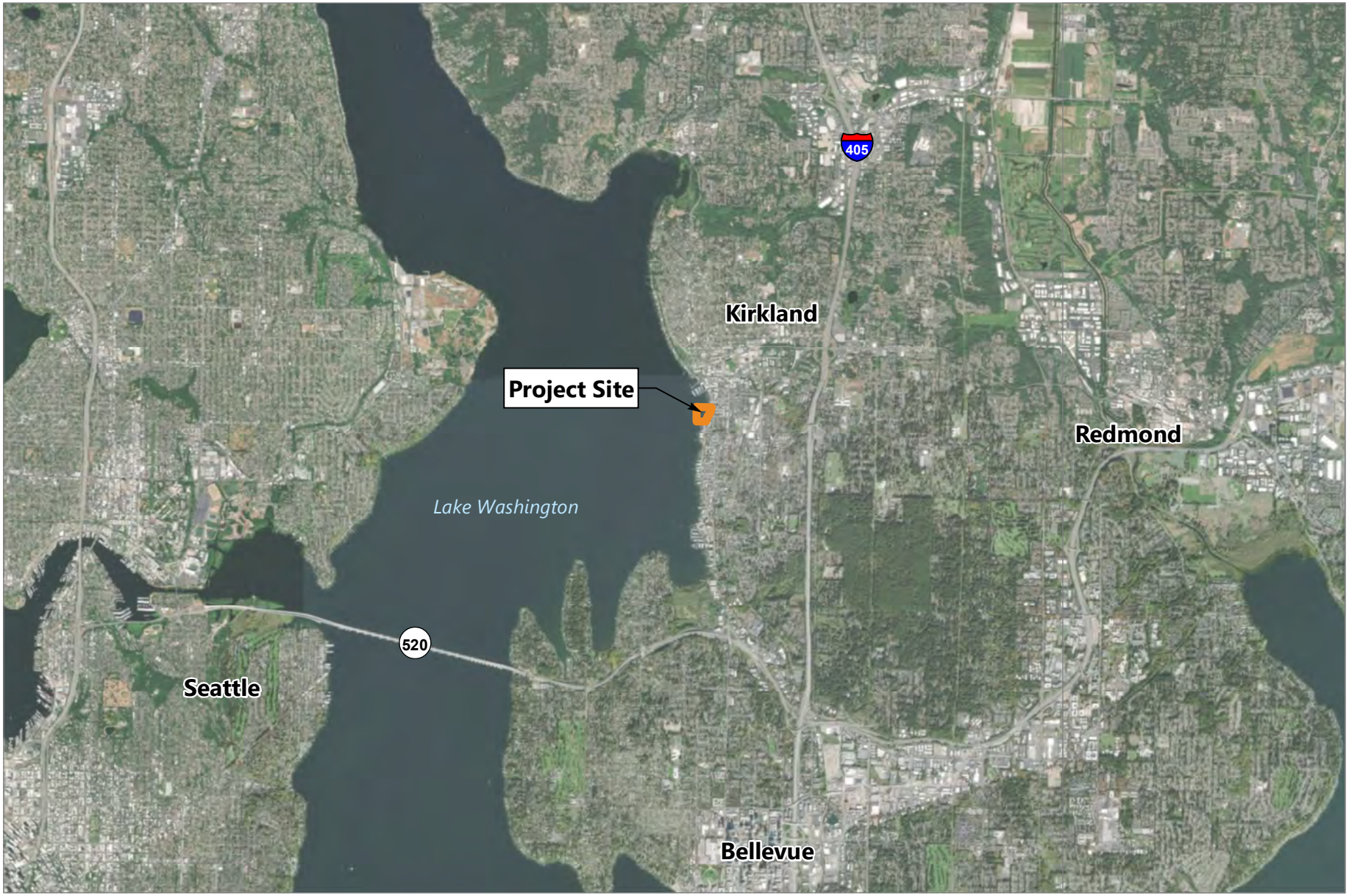

Publish Date: 2020/03/11, 4:02 PM | User: adowell
Filepath: \\orcas\gis\Jobs\City_of_Kirkland_1006\Maps\David_Brink_Park_Critical_Areas_Report\AQ_DavidBrink_fig1_Vicinity_Map.mxd

ANCHOR QEA

0 2
Miles

Figure 1
Vicinity Map
Critical Areas Report
David E. Brink Park Shoreline Renovation Project

Publish Date: 2020/03/11, 4:02 PM | User: adowell
Filepath: \\orcas\gis\Jobs\City_of_Kirkland_1006\Maps\David_Brink_Park_Critical_Areas_Report\AQ_DavidBrink_fig2_Site_Aerial.mxd

ANCHOR QEA

Figure 2
Aerial Photograph of Study Area
Critical Areas Report
David E. Brink Park Shoreline Renovation Project

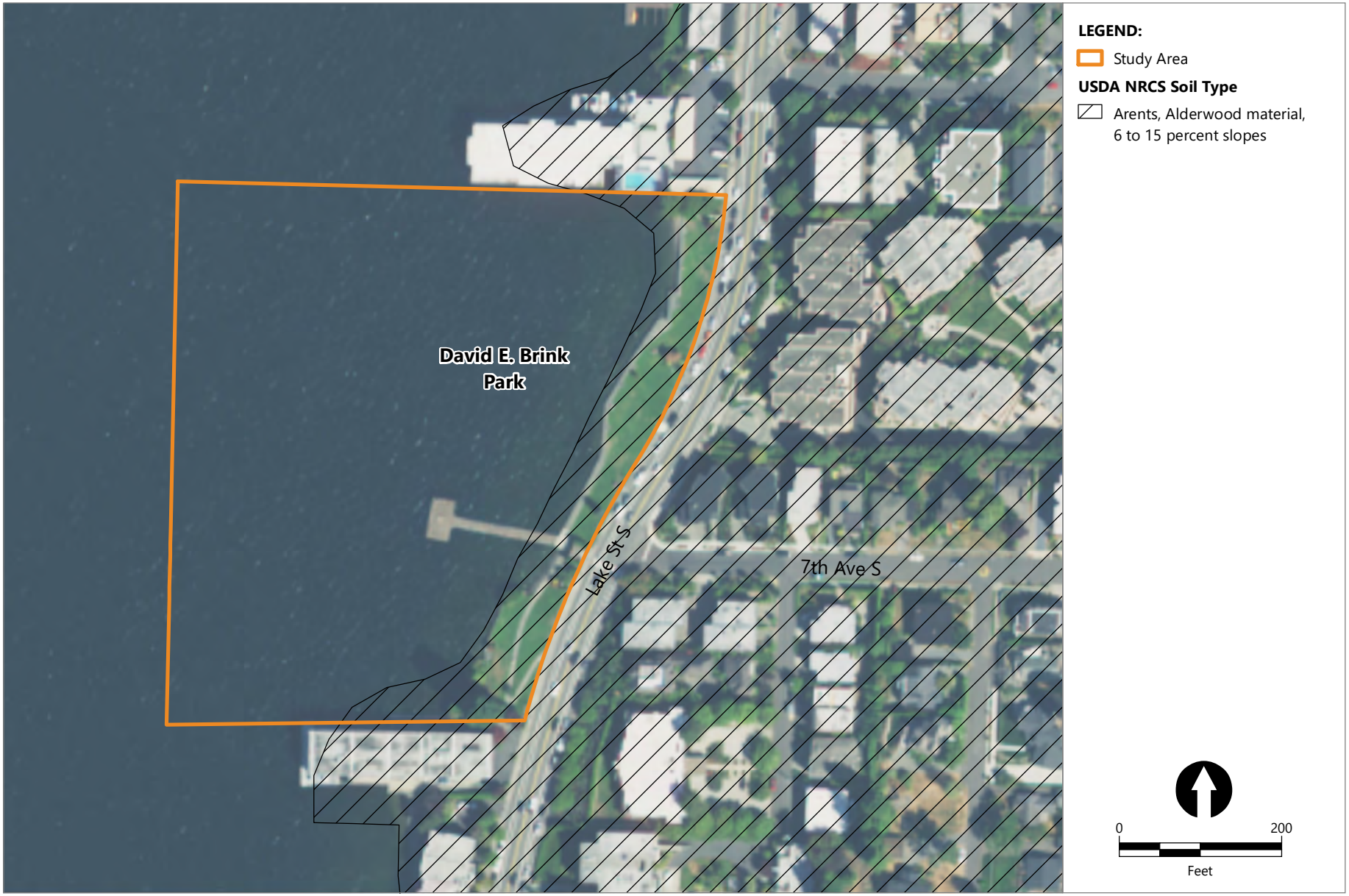

Publish Date: 2020/03/11, 4:03 PM | User: adowell
Filepath: \\orcas\gis\Jobs\City_of_Kirkland_1006\Maps\David_Brink_Park_Critical_Areas_Report\AQ_DavidBrink_fig3_USDA_NRCS_Soils.mxd

ANCHOR QEA

Figure 3
USDA NRCS Soils
Critical Areas Report
David E. Brink Park Shoreline Renovation Project

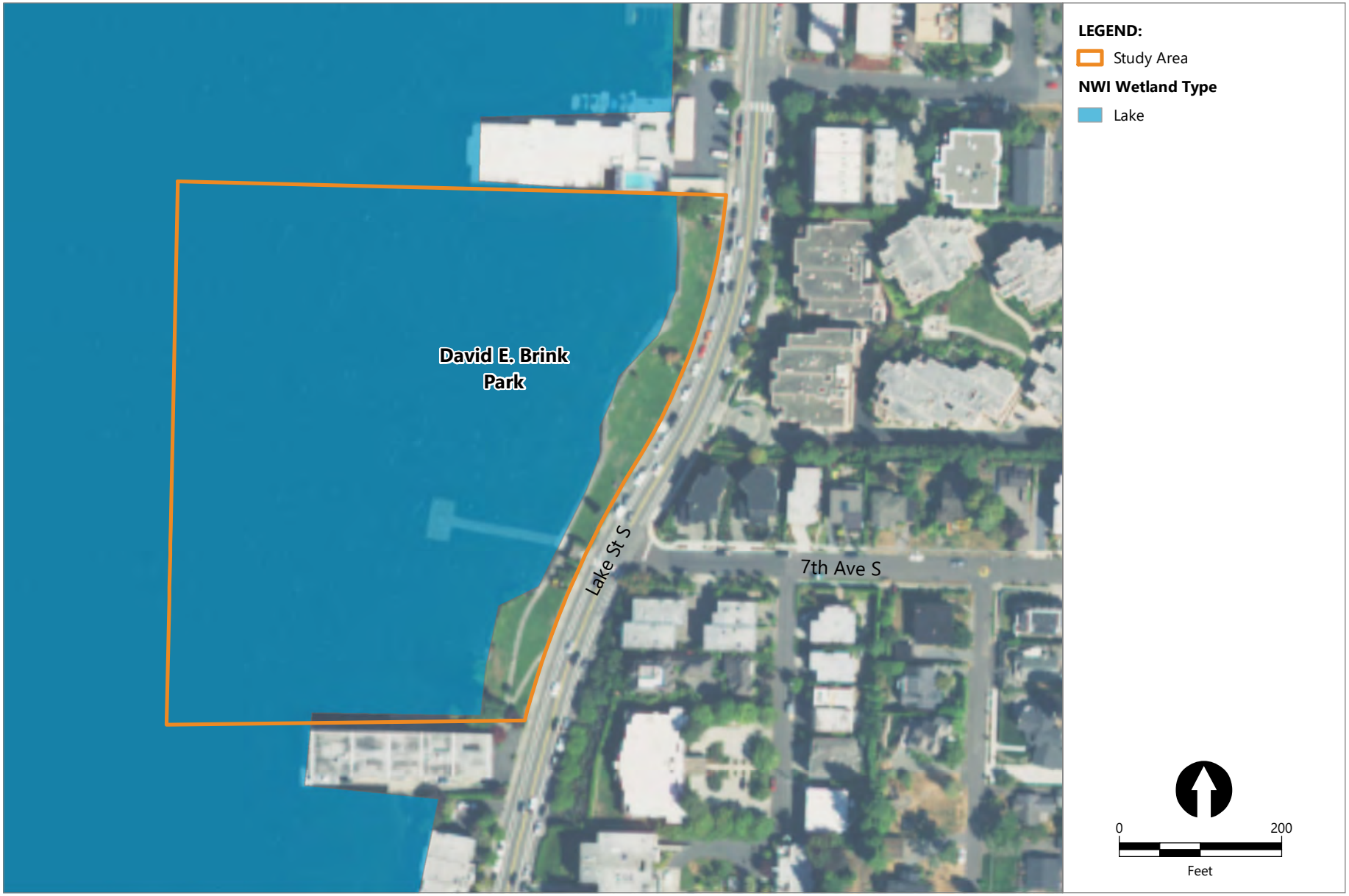

Publish Date: 2020/03/11, 4:03 PM | User: adowell
Filepath: \\orcas\gis\Jobs\City_of_Kirkland_1006\Maps\David_Brink_Park_Critical_Areas_Report\AQ_DavidBrink_fig4_USFWS_NWI.mxd

ANCHOR QEA

Figure 4
USFWS National Wetlands Inventory
Critical Areas Report
David E. Brink Park Shoreline Renovation Project

Appendix A
Project Description and Plan Set

Provided as separate PDF and Excel files

Attachment 3
Restoration and Permitting Program Documentation

Provided as separate PDF and Excel files

Attachment 4
Cultural Resources Assessment

CULTURAL RESOURCES REPORT COVER SHEET

Author: Bundy, Barbara E.

Title of Report: Cultural Resources Survey Report, David E. Brink Park Shoreline Renovation Project

Date of Report: April 2020

County(ies): King Section: 8 Township: 25 N Range: 5 E

Quad: Kirkland Acres: Approx. 0.8

PDF of report submitted (REQUIRED) ☒ Yes

Historic Property Export Files submitted? ☐ Yes ☒ No

Archaeological Site(s)/Isolate(s) Found or Amended? ☐ Yes ☒ No

TCP(s) found? ☐ Yes ☒ No

Replace a draft? ☐ Yes ☒ No

Satisfy a DAHP Archaeological Excavation Permit requirement? ☐ Yes # ☒ No

DAHP Archaeological Site #:
N/A
_____
_____
_____
_____
_____
_____
_____
_____

- Submission of paper copy is required.
- Please submit paper copies of reports ***unbound.***
- Submission of PDFs is required.
- Please be sure that any PDF submitted to DAHP has its cover sheet, figures, graphics, appendices, attachments, correspondence, etc., compiled into one single PDF file.
- Please check that the PDF displays correctly when opened.

ATTACHMENT 2
SEP20-00213

April 2020
David E. Brink Park Shoreline Renovation Project

ANCHOR QEA

Cultural Resources Survey Report

Prepared for City of Kirkland Parks and Community Services and Public Works Departments

April 2020
David E. Brink Park Shoreline Renovation Project

Cultural Resources Survey Report

Prepared for
City of Kirkland Parks and Community Services and Public Works Departments
123 5th Avenue
Kirkland, Washington 98033-6189

Prepared by
Anchor QEA, LLC
1201 3rd Avenue, Suite 2600
Seattle, Washington 98101

Project Number: 191006-01.02

TABLE OF CONTENTS

1 Introduction 1
1.1 Project Description 1
1.2 Regulatory Context 3
1.3 Area of Potential Effects 3
2 Environmental and Cultural Context 5
2.1 Environmental Context 5
2.2 Cultural Context 7
2.3 Previous Research 9
3 Methods, Results, and Recommendations 11
3.1 Methods 11
3.2 Results 11
3.3 Recommendations 12
4 References 17

TABLES

Table 1 Shovel Probe Results 15

FIGURES

Figure 1 Project Vicinity 2
Figure 2 Recommended APE 4
Figure 3 1871 General Land Office Map 6
Figure 4 Moss Bay Shoreline Circa 1900 9
Figure 5 Test Locations 13
Figure 6 Cultural Materials from Shovel Probes 14

PHOTOGRAPHS

Photograph 1 Project Area Overview, Facing South 11
Photograph 2 SP-1 (at Right) and SP-2 (at Left) 16

ABBREVIATIONS

ADA	Americans with Disabilities Act
APE	Area of Potential Effects
bgs	below the ground surface
BP	before present
CFR	Code of Federal Regulations
City	City of Kirkland
cm	centimeter
NRHP	National Register of Historic Places
OHWM	ordinary high water mark
Park	David E. Brink Park
Project	David E. Brink Park Shoreline Renovation Project
SHPO	State Historic Preservation Officer
USACE	U.S. Army Corps of Engineers

1 Introduction

The City of Kirkland (City) is proposing to repair aging shoreline infrastructure and provide habitat enhancements as part of the David E. Brink Park Shoreline Renovation Project (Project). The Project is located at David E. Brink Park (Park) on Lake Washington at 555 Lake Street South in Kirkland, Washington (Figure 1).

The Project will require a permit from the U.S. Army Corps of Engineers (USACE) and must comply with Section 106 of the National Historic Preservation Act, its implementing regulations at 36 Code of Federal Regulations (CFR) 800, and USACE regulations at 33 CFR 325 Appendix C. Section 106 requires federal agencies to take into account the effects of their undertakings on historic properties. This report assists USACE in complying with requirements of Section 106.

1.1 Project Description

The Project is located at 555 Lake Street South in Kirkland, Washington (Section 8 of Township 25 North, Range 5 East). The Park sits along the shoreline of Moss Bay, Lake Washington.

The Project will address safety issues along the shoreline through a combination of repair, replacement, and removal of existing shoreline protection features. The Project will also enhance user experience by providing new access pathways that meet Americans with Disabilities Act (ADA) requirements. Proposed activities include the following:

- Removing and replacing a portion of the concrete bulkhead with a vinyl sheetpile wall with concrete cap at the north end and basalt rockery at the south end of the Park (ground disturbance of up to 5 feet below the ground surface [bgs])
- Removing and replacing the shoreline water access stairs south of the existing pier with a shorter stair feature (minimal/surficial ground disturbance)
- Replacing the existing pier timber decking with a new grated decking (no ground disturbance)
- Installing terraced rock walls, rock revetment, and vegetated areas behind the south end rockery with native low shoreline plantings (ground disturbance up to 4 feet bgs)
- Removing existing derelict pilings near the shoreline (no ground disturbance outside the footprint of the existing pilings)
- Creating two new pocket beaches with native shoreline plantings (ground disturbance up to 5 feet bgs)
- Placing habitat gravel waterward of the shoreline protection features and pocket beaches (no ground disturbance)
- Constructing ADA-compliant public access pathways (ground disturbance up to 1 foot bgs)

With the exception of the existing bulkheads and stairs, no structures will be modified or demolished as part of the Project.

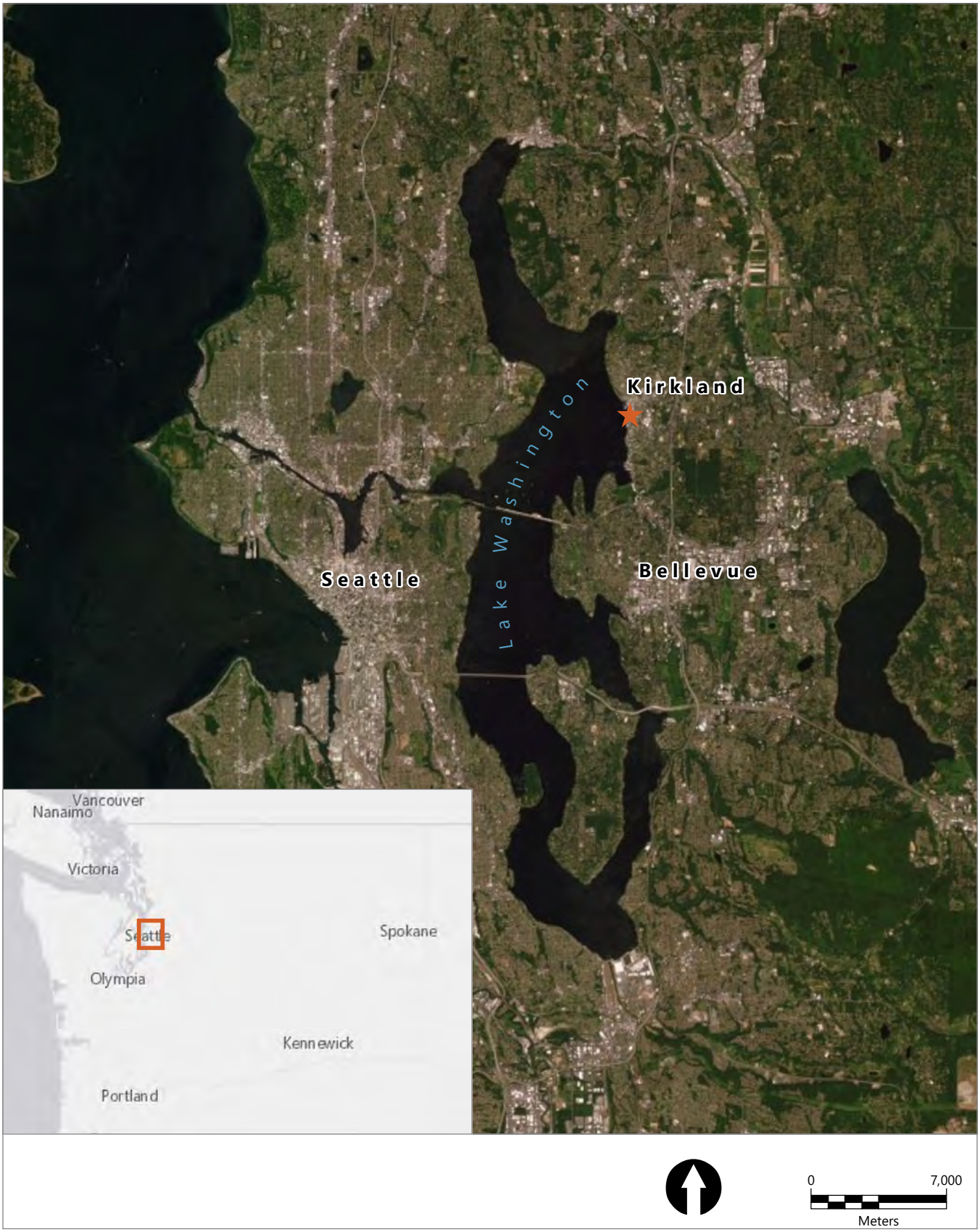

Publish Date: 2020/03/30, 10:22 AM | User: bbundy
Filepath: O:\Jobs\City_of_Kirkland_1006\Maps\David_Brink_Park_Cultural_Figures\DBPark_Cultural_Fig1_Vicinity.mxd

ANCHOR QEA

Figure 1
Project Vicinity
Cultural Resources Survey Report
David E. Brink Park Shoreline Renovation Project

1.2 Regulatory Context

Under Section 106, USACE is required to consider the effects of the permitted activity on historic properties. A historic property is "any prehistoric or historic district, site, building, structure, or object included in, or eligible for inclusion in, the National Register of Historic Places" (NRHP; 36 CFR 800.16[l][1]). Traditional Cultural Properties may also be historic properties. Under the Section 106 process, USACE must consult with interested and affected Indian Tribes and the State Historic Preservation Officer (SHPO) on potential impacts to cultural and historic resources.

To be eligible for inclusion in the NRHP, a historic property must have significance and retain integrity. Significance is defined as meeting one or more of the four NRHP criteria, and integrity is defined as a historic property's ability to convey its historic significance—in other words, its historic appearance and setting.

This report assists USACE with fulfilling the requirements of Section 106 and 36 CFR 800 by recommending the following:

- The Area of Potential Effects (APE)
- Whether there are NRHP-eligible historic properties in the APE
- Whether the undertaking will adversely affect any NRHP-eligible historic properties

1.3 Area of Potential Effects

The APE for a project is "the geographic area or areas within which an undertaking may directly or indirectly cause alterations in the character or use of historic properties" (36 CFR 800.16[d]). USACE will determine the APE for the Project. An APE includes areas where ground disturbance could affect archaeological sites, or modifications or demolition could affect historic structures.

No structures older than 50 years will be demolished or modified for the Project (aerial photographs and nautical charts indicate that the bulkheads and stairs were constructed sometime between 1976 and 1980; they are not 50 years old and are not potential historic properties). Ground disturbance will occur for the Project where new features are created through excavation: at the south and north bulkhead replacement and pocket beach creation areas; where planting will occur; and where new pathways will be installed. The recommended APE for the Project is shown in Figure 2.

Publish Date: 2020/03/30, 10:23 AM | User: bbundy
Filepath: O:\Jobs\City_of_Kirkland_1006\Maps\David_Brink_Park_Cultural_Figures\DBPark_Cultural_Fig2_APE.mxd

ANCHOR QEA

Figure 2
Recommended APE
Cultural Resources Survey Report
David E. Brink Park Shoreline Renovation Project

2 Environmental and Cultural Context

2.1 Environmental Context

The Project area is in the Puget Trough physiographic province, a valley system that extends from Puget Sound south through the Willamette Valley and that separates the Olympic Mountains from the Western Cascade Mountains (Franklin and Dyrness 1973). During the last glacial advance, the Vashon Stade of the Late Wisconsin glaciation, glaciers extended as far as Centralia, 85 miles south of Seattle. Glaciers began to recede about 15,000 years ago, leaving behind a rapidly changing landscape of proglacial lakes, meltwater streams, and other alluvial features. This process created the Vashon till, which is the thick layer of Pleistocene glacial outwash underlying Holocene sediments in the Project vicinity. As the glaciers retreated, land formerly depressed by the weight of the ice began to rebound, a process of uplift that lasted until approximately 9,000 years ago (Dragovich et al. 1994; Troost 2011).

As glaciers retreated, meltwater lakes—blocked from draining to the ocean by ice—formed over the Puget Sound area, submerging much of the area between the Olympic and Cascade Mountains (Troost 2011). The Project area at this time would have been under fresh water. About 14,900 years ago, the last glacial lake broke through its ice dam and drained; marine waters intruded, and Lake Washington was briefly part of Puget Sound because land was depressed below sea level by ice cover and had not yet rebounded. Water levels were much lower than modern lake levels because sea levels were relatively low (Troost 2011; Hodges 2010). The Project area would have been upland at this time. Shortly thereafter, what is now Lake Washington began to fill with fresh water as uplift continued and the connection with Puget Sound was cut off. Lake levels began to rise and continued to do so through the Late Holocene, when they reached historic levels recorded in the mid-1800s, fluctuating with seasonal weather patterns (Hodges 2010). The Project area would have been under an average of 2 to 9 feet of water in the Late Holocene, with a 5,500-year-old paleoshoreline mapped approximately 400 to 450 feet west of the modern shoreline. An 1884 General Land Office map shows the APE under water (Figure 3).

The Lake Washington watershed has been altered since the time of Euroamerican contact. In 1883, Euroamerican settlers trenched a log chute between Union Bay and nearby Portage Bay of Lake Union (Dorpat 1982). The chute was eventually widened into the Montlake Cut in 1916. When the cut was opened, Lake Washington abandoned its southern outlet and began draining into Lake Union. The lake level lowered about 8.9 feet (Hodges 2010). Lake levels since the Montlake Cut have been controlled by the Hiram M. Chittenden Ballard Locks, dampening seasonal fluctuations.

Publish Date: 2020/03/30, 10:20 AM | User: bbundy
Filepath: O:\Jobs\City_of_Kirkland_1006\Maps\David_Brink_Park_Cultural_Figures\DBPark_Cultural_Fig3_GLO.mxd

ANCHOR QEA

Figure 3
1871 General Land Office Map
Cultural Resources Survey Report
David E. Brink Park Shoreline Renovation Project

Native vegetation in the Puget Sound area consists of forests of the western hemlock (*Tsuga heterophylla*) zone, which is characterized by western hemlock, western red cedar, and Douglas fir, with a dense shrub and herbaceous understory including sword fern, salal, Oregon grape, ocean spray, blackberry, red huckleberry, and red elderberry (Franklin and Dyrness 1973). A variety of fauna would have been present in the Project vicinity prior to modern land modifications, including fish, invertebrates, waterfowl, and large and small mammals. The Project site is currently landscaped with a variety of native and non-native plants.

2.2 Cultural Context

The earliest evidence of prehistoric human occupation in western Washington may be the Manis mastodon site on the Olympic Peninsula near Sequim, which has been radiocarbon dated to about 12,000 before present (BP; Gustafson and Manis 1984). There are few other sites that date before about 5,000 BP. Numerous sites have been identified across the region dating to the period after 5,000 BP, when larger populations began to organize in more complex ways to exploit a wide range of resources, including salmon and shellfish, land mammals, and plant resources such as berries, roots, and bulbs (Matson and Coupland 1995). Over time, populations accumulated in large, semi-sedentary cedar plank house villages located at river mouths and confluences and on protected shorelines. The artifact tool kits became increasingly complex and specialized, allowing for large takes of resources, which were processed and stored for year-long consumption (Ames and Maschner 1999).

The Project area is in the traditional territory of the Duwamish, a Southern Coast Salish group speaking the Southern Lushootseed language, who lived in villages from Lake Washington to the Black River (Suttles and Lane 1990). In fact, early Euroamerican maps record the name "Duwamish Lake" for Lake Washington. More than 12,000 Lushootseed speakers occupied the Puget Sound region prior to European contact; however, epidemics introduced by the newcomers reduced this population to only 5,000 by the 1850s (Suttles and Lane 1990).

Southern Coast Salish villages were occupied part of the year, largely in winter, and residents made seasonal journeys to camps near resource gathering areas. Coastal villages relied on fish, which they caught with various weirs and traps, as well as shellfish and sea mammals (Suttles and Lane 1990; Ruby and Brown 1986). These food sources were supplemented by various berries, roots, and bulbs (Suttles and Lane 1990; Ruby and Brown 1986).

The ethnographer T.T. Waterman recorded one Lushootseed placename in the Project vicinity: number 102, *S-taLaL* for "the site of the town of Kirkland" (Hilbert et al. 2001:89). Waterman does not report any placenames in or near the Project area.

Captain George Vancouver's 1792 exploration of Puget Sound marked the first Euroamerican intrusion in the region (Kirk and Alexander 1990:271). However, Euroamerican settlement in the region was not established until 1832; the earliest instance was at Fort Nisqually at the southern end of Puget Sound. The Wilkes Expedition of 1841 used the fort as a base for explorations in southern Puget Sound (Kirk and Alexander 1990:308).

Lumber was Puget Sound's major export for much of its early history; in fact, Washington was the number one lumber-producing state in 1910, with 63% of the state's wage workers dependent upon the forest products industry for jobs (Schwantes 1996:215). Many of the mill towns in Puget Sound were established after the devastating San Francisco fires of 1852. Virgin timber stands and natural deepwater anchorages provided ships refuge from the Pacific storms. Soon, inlets up and down Puget Sound were exporting timber down the coast (Schwantes 1996:217). The timber industry declined in the early twentieth century, but the region's fortunes were revived by military industry during World War II.

Settlement on the east side of Lake Washington began around 1855 to 1860 in the vicinity of Yarrow Point in what is now Bellevue, south of the Project area (Harvey 1993). Due to the lack of "decent" roads, most homesteads were situated along the banks of Lake Washington and travel was commonly by water (Harvey 1993:3). Logging and milling operations were underway on the east side by the 1870s. The 1871 General Land Office map does not show any homesteads yet established in the Project vicinity (see Figure 3), but just 10 years later several families had cleared land for homesteads along the shoreline between Juanita Bay and Moss Bay (Stein 1998). In the early 1880s, the towns of Juanita and Houghton (now part of Kirkland) were founded, though the land between (where the Project area is located) "remained largely undeveloped" (Stein 1998:1).

Englishman Peter Kirk arrived in 1886. He partnered with local newspaper publisher Leigh S.J. Hunt to purchase land in the Houghton vicinity with the vision of creating a planned community centered around a steel mill and other industrial activity. Due to various market conditions, the venture failed, but later woolen mills and shipbuilding buoyed the city's economy (KHS 2012; Ely 1975). A ferry landing at Moss Bay north of the Project area provided easy access to Seattle and by the early 1900s, Kirkland was a bedroom community (Stein 1998).

The Project area appears to have been undeveloped in a photograph that is undated, but appears to be from the late 1800s or early 1900s, prior to construction of the car ferry dock in 1914 and construction of the Montlake Cut in 1916 (Figure 4). Several small docks were constructed over the years. A 1936 aerial photograph shows a small dock at the foot of 7th Avenue South, where the current pier is, with the rest of the Park forested. By 1964, that dock had been replaced by a different structure, and a new small dock and structure had been constructed about 200 feet north of the structure at the foot of 7th Avenue South. The remainder of the Park area still appears as vegetated, but possibly with some maintained open space. The current shoreline with bulkheads and lawns

appears in 1980; the 1968 dock is still in place but the small dock and structure to the north are gone. The 1968 dock was replaced with the current structure sometime between 1981 and 1990. A small cinder-block storage structure near the foot of the current dock appears to have been built at the same time.

Figure 4
Moss Bay Shoreline Circa 1900

Source: Kirkland Heritage Society

Overall, the Project area appears to have been under water in the late Holocene, then a lightly used waterfront area until development of the Park in the late 1970s to early 1980s.

2.3 Previous Research

There are no recorded archaeological sites within a mile of the Project area. Four sites are recorded within 2 miles, including an isolated find of a bottle (45KI969; 1.0 mile east of the Project area), a sunken World War II aircraft in Lake Washington (45KI402; 1.1 miles northwest of the Project area), an historic debris scatter (45KI748; 2.2 miles northeast of the Project area), and an historic homestead (45KI741; 2.9 miles northeast of the Project area). A mammoth or mastodon tusk, not apparently associated with human activity, was found at Lakeview Elementary School, about 0.4 mile southeast of the Project area (Liddle 2000).

No archaeological surveys have previously been conducted in the Project area. Three surveys that included subsurface testing have occurred within a mile of the Project area. The nearest cultural resources research was the archaeological monitoring that located the tusk at Lakeview Elementary (Liddle 2000). An investigation for a cell tower approximately 0.7 mile north of the Project area located no cultural materials (Finley 2014). A survey including subsurface testing was conducted about 0.8 mile southeast of the Project area; non-diagnostic historic items such as glass and nails were located (Peterson 2018).

The environmental and cultural context of the Project area, together with the results of previous research, indicate moderate potential for archaeological resources. Precontact archaeological materials are unlikely to be present given that the Project area was underwater in the late Holocene. Historic materials related to early to mid-twentieth century docks may be present.

3 Methods, Results, and Recommendations

3.1 Methods

The cultural resources survey plan included pedestrian reconnaissance of the entire APE and excavation of shovel probes where native sediments could be present and may be disturbed (primarily at the areas of bulkhead removal and pocket beach creation). Shovel probes were excavated by hand at 20-meter intervals, with a total of six shovel probes planned. Probes were excavated using industry-standard methods, and sediments were screened through 1/4-inch mesh. Because the initial shovel probes demonstrated minimal archaeological potential across the landform, only three of the six planned shovel probes were excavated. Photographs and field notes of the surveyed area were recorded.

3.2 Results

The pedestrian survey revealed maintained lawn and ornamental plants throughout the Project area. Surface visibility was minimal. Near the southern extent of the Project area, where the southern pocket beach will be constructed, a bulkhead has failed and sediments were visible. The Project area slopes fairly steeply from east to west (Photograph 1). No cultural materials or apparent anthropogenic surfaces were observed.

Photograph 1
Project Area Overview, Facing South

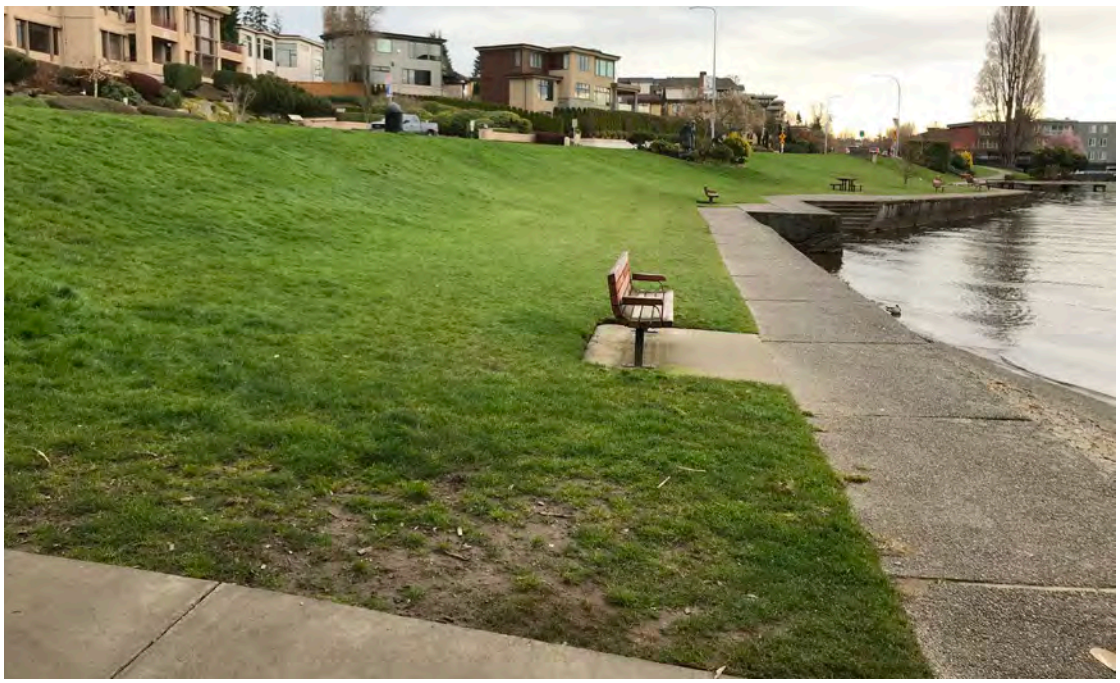

Three of the six planned shovel probes were excavated, numbered SP-1 to SP-3. Two were in the northern pocket beach/bulkhead removal area (SP-1 and SP-3), and one was in the southern pocket beach/bulkhead removal area (SP-2; Figure 5). Probes generally revealed topsoil and fill, above what appear to be native beach and lacustrine deposits. Probes were excavated as far as possible; SP-1 and SP-3 were terminated in wet beach deposits that collapsed into the probe, and SP-2 was terminated in wet sediments. Results are shown in Table 1, and SP-1 and SP-2 are shown in Photograph 2.

Cultural materials were found in all three shovel probes, almost exclusively modern materials. Figure 6 shows the items from each probe. The only potentially archaeological artifacts are three fragments of what appears to be jet or lignite with parallel striations on one side; two of the fragments refit and have a thin rim. The fragments appear to be from a small, fairly thin-walled vessel such as a small cup or a pipe bowl. They were found in the topsoil in SP-1. The topsoil was almost certainly imported from off site and the artifacts are out of context. The remaining materials are either modern or non-diagnostic to either the modern or historic period (such as green bottle glass).

All cultural materials were found within fill or topsoil. Deposits that appeared to be native sediments did not contain artifacts. It appears that the underlying gravel and fine silty sand above it could have been deposited by a post-5,500-year-old beach (because it is landward of the mapped 5,500-year-old shoreline), which was later submerged as the lake level continued to rise. Fine-grained materials then were deposited as the area became a deeper, lower energy environment.

3.3 Recommendations

No significant archaeological materials were encountered, and the potential for construction to encounter undisturbed archaeological materials is low. It is recommended that USACE determine that no historic properties will be affected by the Project.

Publish Date: 2020/03/30, 1:25 PM | User: bbundy
Filepath: O:\Jobs\City_of_Kirkland_1006\Maps\David_Brink_Park_Cultural_Figures\DBPark_Cultural_Fig5_TestLocations.mxd

ANCHOR QEA

Figure 5
Test Locations
Cultural Resources Survey Report
David E. Brink Park Shoreline Renovation Project

SP-1 Artifacts

SP-2 Artifacts

Closeup of Possible Jet/Lignite Artifacts from SP-1

SP-3 Artifacts

ANCHOR QEA

Figure 6
Cultural Materials from Shovel Probes
Cultural Resources Survey Report
David E. Brink Park Shoreline Renovation Project

Table 1
Shovel Probe Results

No.	Stratum (cm below surface)	Cultural Materials	Interpretation
SP-1	0-2 cm: roots and organics	none	O horizon
	2-19 cm: medium brown sandy silt with well-sorted medium sand	ceramic or jet fragments	topsoil
	19-26 cm: yellowish brown fine to medium sand with silt	none	fill
	26-58 cm: yellowish brown silt loam with poorly sorted sand and sparse small gravels	nail, bolt, unidentifiable metal fragments, plastic fragment, bottle glass fragment, brick or tile fragments, cigarette filter, foam fragments	fill
	58-84 cm: greyish brown fine sandy loam, no gravels, redox present	none	lacustrine deposit
	84-104 cm: very wet poorly sorted coarse sand and gravel	none	beach deposit
SP-2	0-3 cm: roots and organics	none	O horizon
	2-17 cm: medium brown sandy silt with well-sorted medium sand	wire, plastic fragments, ironstone fragment, unidentified metal fragment	topsoil
	17-50 cm: medium brown sandy loam with 60% to 70% rounded to subangular poorly sorted gravels; water flow at 42 cm	none	fill
	50-69 cm: yellowish brown sandy loam with rounded to subangular cobbles, redox present	none	fill
	69-79 cm: grey silty sand with rounded to subangular gravels and cobbles	none	beach deposit
SP-3	0-3 cm: roots and organics	none	O horizon
	3-20 cm: yellowish brown silt loam with poorly sorted sand and sparse small gravels	plastic-coated wood fragments, metal fragment	fill
	20-49 cm: greyish brown silty sand	none	lacustrine deposit
	49-73 cm: greyish brown fine sandy loam, no gravels, redox present	none	lacustrine deposit
	73-80 cm: very wet poorly sorted coarse sand and gravel	none	beach deposit

Photograph 2
SP-1 (at Right) and SP-2 (at Left)

4 References

Ames, K.M. and H.D.G. Maschner, 1999. *Peoples of the Northwest Coast: Their Archaeology and Prehistory*. London: Thames and Hudson Ltd.

Franklin, J.F., and C.T. Dyrness, 1973. *Natural Vegetation of Oregon and Washington*. USDA Forest Service, General Technical Report PNW-8.

Dorpat, P., 1982. "The Montlake Isthmus Before the Ship Canal. Seattle Then and Now." *Pacific Northwest Magazine*, August 8, 1982.

Dragovich, J.D., P.T. Pringle, and T.J. Walsh, 1994. "Extent and Geometry of the Mid-Holocene Osceola Mudflow in the Puget Lowland: Implications for Holocene Sedimentation and Paleogeography." *Washington Geology* 22(3):3-26.

Ely, Arline, 1975. *Our Foundering Fathers, The Story of Kirkland*. Kirkland, Washington: Kirkland Public Library.

Finley, Aimee, 2014. *Results of a Cultural Resources Inventory of the Sea Moss Bay Cell Site (Trileaf #610659), Kirkland, King County, Washington*. Report on file at the Department of Archaeology and Historic Preservation, Olympia, Washington.

Gustafson, C.E., and C. Manis, 1984. *The Manis Mastodon Site: An Adventure in Prehistory*. Manis Enterprises, Sequim, Washington.

Harvey, David W., 1993. *Historic Context Statement, Survey of Historic Structures for the City of Kirkland*. Report on file at the Department of Archaeology and Historic Preservation, Olympia, Washington.

Hilbert, Vi, Jay Miller, and Zalmai Zahir, 2001. *Puget Sound Geography*. Original Manuscript from T.T. Waterman, Edited with Additional Material from Vi Hilbert, Jay Miller, and Zalmai Zahir. Seattle, Washington: Lushootseed Press.

Hodges, Charles, 2010. *SR 520, I-5 to Medina: Bridge Replacement and HOV Project: Draft Geomorphic Investigations at Foster Island*. Report on file at the Washington State Department of Transportation, Seattle, Washington.

Kirk, R., and C. Alexander, 1990. *Exploring Washington's Past*. Seattle, Washington: University of Washington Press.

KHS (Kirkland Heritage Society), 2012. "Kirkland's Rich History." Accessed March 2020. Available at: http://kirklandheritage.org/history/kirkland-history#.

Liddle, Janet A., 2000. *Letter to Rob Whitlam Regarding Mastodon or Mammoth Tusk Discovered at Lakeview Elementary School In Kirkland*. Report on file at the Department of Archaeology and Historic Preservation, Olympia, Washington.

Matson, R.G., and G. Coupland, 1995. *The Prehistory of the Northwest Coast*. London: Academic Press.

Peterson, Emily, 2018. *Cultural Resources Assessment of the Lakeview Drive Office Project, Kirkland, Washington*. Report on file at the Department of Archaeology and Historic Preservation, Olympia, Washington.

Ruby, R.H., and J.A. Brown, 1986. *A Guide to the Indian Tribes of the Pacific Northwest*. Norman, Oklahoma: University of Oklahoma Press.

Schwantes, C.A., 1996. *The Pacific Northwest: An Interpretive History*. Lincoln, Nebraska, and London: University of Nebraska Press. .

Stein, Alan, 1998. "Kirkland: thumbnail history." HistoryLink.org essay 208. Accessed March 2020. Available at: https://www.historylink.org/File/208.

Suttles, W., and B. Lane, 1990. "Southern Coast Salish." In *Northwest Coast, Handbook of North American Indians, Vol. 7.* Editor, W. Suttles. Washington, DC: Smithsonian Institution; pp. 485-502.

Troost, K.G., 2011. *SR 520, I-5 to Medina: Bridge Replacement and HOV Project: Geomorphology and Shoreline History of Lake Washington, Union Bay, and Portage Bay Technical Memorandum*. Report on file at the Washington State Department of Transportation, Seattle, Washington.

LSM PERMIT

City of Kirkland

Land Surface Modification Permit

CIty of Kirkland
123 5th Avenue
Kirkland WA 98033
425-587-3600

Permit Number: **LSM20-06180**
Type: **Land Surface Modification - LSM**
Work Class: **Non Site Development**

LSM20-06180

Permit Information

Job Address: 555 LAKE ST S
Project:
Parcel: 0825059133

Application Date: 09/15/2020
Issue Date: 03/25/2021
Expiration Date: 09/25/2024

Scope of Work

DAVID BRINK PARK - Installation of ADA accessible pathways and replacement sidewalks, landscaping, irrigation. (see BNR20-06182 for walls, steps and pier repairs)

Contacts

Type	Contact Name	Address	Phone
Applicant	MBP Contact 2020 v2 MBP.com	Online Payment	
Owner	CITY OF KIRKLAND	123 5TH AVE KIRKLAND, WA 98033	425-587-3000
Owner is Contractc	Owner is Lender		
Primary Contact	Brian Baker City of Kirkland	123 5TH AVE KIRKLAND, WA 98033	425 587-3874

Water and Sewer Districts

Water: City of Kirkland: 425-587-3800
Sewer: City of Kirkland: 425-587-3800

Permit Type of Work

- ☐ Water
- ☐ Storm Drainage
- ☐ Sewer
- ☐ ROW

Conditions

The City approved plans, permit, conditions, and inspection record must remain on the job site for use by City inspection personnel. Any sales tax reported to the State in association with this project should be coded to the City of Kirkland tax location code 1716. I certify that the information furnished by me is true and correct to the best of my knowledge and the applicable City of Kirkland requirements will be met.

☐ Owner or ☐ Agent _____ DATE: _____
(Check one) (Print Name)

_____
(Signature)

555 LAKE ST S

City of Kirkland
123 5th Avenue
Kirkland, WA 98033
425-587-3600

SPECIFIC PERMIT CONDITIONS

BUILDING ADDRESS	PERMIT NUMBER	PERMIT TYPE / WORK CLASS	DATE PRINTED
555 LAKE ST S	LSM20-06180	Land Surface Modification - LSM / Non Site Development	3/4/2021

DESCRIPTION OF WORK:
DAVID BRINK PARK - Installation of ADA accessible pathways and replacement sidewalks, landscaping, irrigation. (see BNR20-06182 for walls, steps and pier repairs)

Building Department Conditions:

LSM BUILDING CONDITIONS
Stairs, walls & pier repair are under separate BNR20-06182

Please call 425-587-3600 for Building Department questions related to this permit.

1. The approved plans shall not be changed, modified, or altered without authorization from the building official. The approved plans are required to be on the job site.

2. This LSM Permit does not authorize any cutting or digging for new footings or foundations. A SEPERATE BUILDING PERMIT MUST BE ISSUED PRIOR TO ANY FOOTING OR FOUNDATION WORK.

3. No excavation or fill is authorized to encroach upon a neighboring property without explicit agreement by the adjoining property owner.

4. Separate demolition permit(s) are required prior to removal of any existing structures.

5. Separate building permit(s) are required for construction of any new buildings.

6. A building permit is required for a cast-in-place storm water detention vault, if one is to be constructed. The building permit is issued separately, or combined with this LSM permit.

7. Building permit(s) are required for cast-in-place retaining wall(s) that are 4’ or greater in height, measured from the BOTTOM OF FOOTING to the TOP OF WALL. The building permit(s) are issued separately, or combined with this LSM permit.

8. A building permit is required for any shoring that protects an adjacent property. If shoring is required for excavation or construction of any new structure, the shoring may be included as part of the building permit for that structure. The building permit is issued separately, or combined with this LSM permit.

9. A geotechnical evaluation may be required at the time of each building permit submittal.

10. No structural or fire and life safety review has occurred for the proposed buildings, as they require separate building permit applications for review and approval.

Planning Department Conditions:

PLANNING CONDITIONS - Contact: Jennifer Anderer, 425.587.3239

PCD 1. REVISED SITE PLAN - Any proposed changes to the approved site plan must be submitted as a revision to the building permit for review and approval prior to implementation.

PCD 2. ALL - HOURS OF CONSTRUCTION - All development activity and heavy equipment operation is restricted to 7:00 a.m. to 8:00 p.m. Monday through Friday, and 9:00 a.m. to 6:00 p.m. Saturday. Other restrictions on Saturday include: no working in the right-of-way, no work requiring inspection, and no trucking into or out of the site; however, light grading work on-site on Saturday is allowed. NO development activity or heavy equipment operation may occur on Sundays or the following holidays: New Year's Day, Memorial Day, Independence Day, Labor Day, Thanksgiving Day, and Christmas Day.

PCD 3. MAXIMUM NOISE LEVELS - All mechanical units shall comply with the maximum environmental noise levels established pursuant to the Noise Control Act of 1974, Revised Code of Washington (RCW) 70.107. See Chapter 173-60 Washington Administrative Code (WAC). A link to the WAC and RCW is available at www.kirklandpermits.net.

Public Works Department Conditions:

PUBLIC WORKS CONDITIONS

1. Refer to the Contract Documents for construction of the subject project, including but not limited to all terms, conditions, provisions, agreements, construction plans, specifications, addenda, and all applicable standards, codes, laws, and regulations.

2. The CIP Division of Public Works will manage the construction process and provide inspections for right-of-way /street /public utilities improvements, for land surface modifications, and for construction stormwater pollution prevention /erosion and sediment control. Inspections may be provided by consultant(s) working on behalf of the CIP Division and/or by in-house staff, unless otherwise specified by the Contract Documents.

City of Kirkland
123 5th Avenue
Kirkland, WA 98033

INSPECTION RECORD - THIS CARD MUST BE POSTED ON SITE

Schedule an inspection by 6:00 PM for next day inspections
Schedule online at: **www.MyBuildingPermit.com**

Permit #: **LSM20-06180**

How to request an inspection:
1) Go to **http://www.MyBuildingPermit.com**
2) Select Kirkland as the Jurisdiction.
3) Select Permit Number or Address.
4) Follow the on-screen instructions.

BUILDING ADDRESS	PARCEL NUMBER	DATE PRINTED	PERMIT TYPE	WORKCLASS	SQ FT	VALUATION
555 LAKE STS	0825059133	3/4/21	Land Surface Modification - LSM	Non Site Development	0	$0.00

REQUIRED INSPECTIONS - DO NOT COVER ANY WORK PRIOR TO INSPECTION

	Inspection	IVR	Date	Insp	Inspection	IVR	Date	Insp
1	PW - Tree Fencing Installation	105						
2	PW - Erosion Control	102						
3	PW - Final	195						

* Note: 1st erosion control inspection is required prior to any excavation. * 2nd erosion control inspection is required after foundation backfill.
(These erosion control inspections only apply if they are listed on the above checklist)

Departmental staff: BLD is Building Dept, PW is Public Works Dept, PCD is Planning Dept, and FIR is Fire Dept

NOTE: THIS INSPECTION RECORD IS THE CERTIFICATE OF OCCUPANCY WHEN THE BUILDING FINAL INSPECTION HAS BEEN APPROVED

Inspector's Comments

COK PW Dept
Approved Construction
Plans For LSM20-06180
Jamie Ward
4/2/2021

CITY OF KIRKLAND

DAVID E. BRINK PARK SHORELINE RENOVATION

No fire/life safety plan review has occurred for this LSM permit.

This LSM permit does not authorize any cutting or digging for footings or foundations. A SEPERATE BUILDING PERMIT MUST BE ISSUED PRIOR TO ANY FOOTING OR FOUNDATION WORK.

This LSM permit does not authorize grading activity to cross property lines or affect adjacent properties unless explicitly authorized by the owner(s) of the propert(ies) affected.

Steps, walls, and pier repair are permitted under BNR20-06182.

JULY 2020

CITY OFFICIALS

PENNY SWEET	MAYOR
JAY ARNOLD	DEPUTY MAYOR
NEAL BLACK	COUNCIL MEMBER
KELLI CURTIS	COUNCIL MEMBER
AMY FALCONE	COUNCIL MEMBER
TOBY NIXON	COUNCIL MEMBER
JON PASCAL	COUNCIL MEMBER
KURT TRIPLETT	CITY MANAGER
JULIE UNDERWOOD	INTERIM PUBLIC WORKS DIRECTOR
ROD STEITZER, PE	CAPITAL PROJECTS MANAGER

CONTACT PERSONNEL

NAME	AGENCY	PHONE
BRIAN BAKER	COK PUBLIC WORKS DEPARTMENT	425.587.3874
STEVE HOOPES	COK FIELD REPRESENTATIVE	425.623.5086
RIK MAYER	COK FIELD REPRESENTATIVE	206.496.4265
BEN McVITTIE	COK FIELD REPRESENTATIVE	425.410.4606
JEANNE COLEMAN	PUGET SOUND ENERGY (GAS)	425.449.7410
FREMONT AGUINALDO	PUGET SOUND ENERGY (ELECTRIC)	425.223.0936
JOE FORDON	ZIPLY	425.263.5348
JAY SCHWAB	ZIPLY	425.263.4019
SCOTT CHRISTENSON	ZIPLY	425.471.1079
TOM CREIST	KIRKLAND WATER/SEWER	425.587.3910
CONST. COORDINATOR	KING COUNTY METRO	206.684.2732
JEFF MILES	LAKE WASH. SCHOOL DISTRICT	425.936.1120
EMERGENCY	NORCOM	911
POLICE MAIN LINE	COK	425.587.3400
FIRE MAIN LINE	COK	425.864.3650
SPILL RESPONSE HOTLINE	COK	425.587.3900
ONE CALL UTILITY LOCATE		800.424.5555

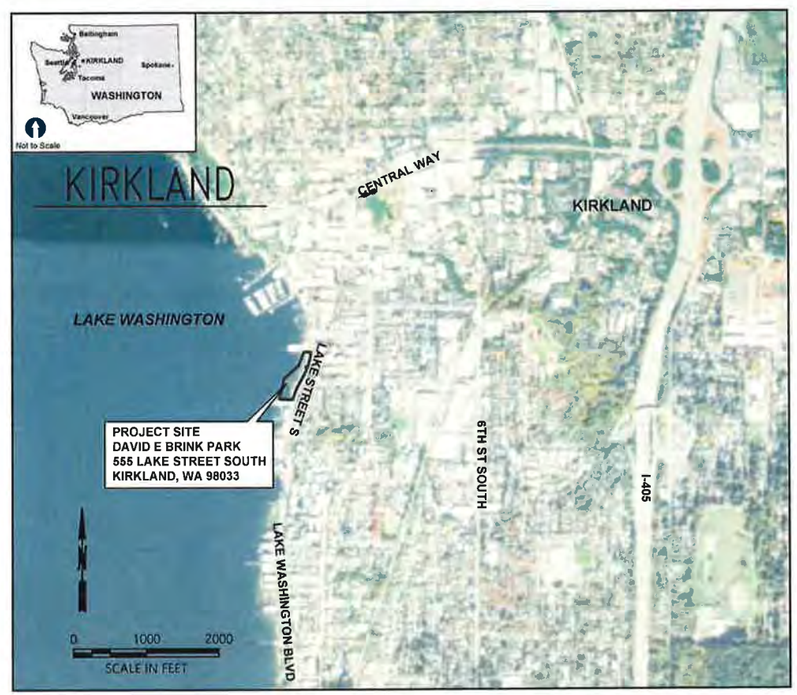

INDEX OF DRAWINGS

SHEET #	DRAWING #	TITLE
1	G-1	COVER SHEET
2	G-2	COMPOSITE SITE PLAN
3	G-3.1	BOUNDARY SURVEY
4	G-3.2	EXISTING CONDITIONS PLAN - SOUTH
5	G-3.3	EXISTING CONDITIONS PLAN - NORTH
6	T-1.1	TEMPORARY EROSION AND STORMWATER CONTROL (TESC) PLAN - SOUTH
7	T-1.2	TEMPORARY EROSION AND STORMWATER CONTROL (TESC) PLAN - NORTH
8	T-2	TESC DETAILS
9	T-3	TESC NOTES
10	D-1.1	CLEARING AND DEMOLITION PLAN - SOUTH
11	D-1.2	CLEARING AND DEMOLITION PLAN - NORTH
12	CV-1.2	LAYOUT PLAN AND CONTROL POINTS - SOUTH
13	CV-1.2	LAYOUT PLAN AND CONTROL POINTS - NORTH
14	C-1.1	GRADING PLAN - SOUTH
15	C-1.2	GRADING PLAN - NORTH
16	C-1.3	NORTH SHORELINE PATHWAY GRADING PLAN
17	C-2	GRADING AND MATERIALS SECTIONS
18	C-3	GRADING AND MATERIALS SECTIONS
19	C-4	PATHWAY AND WALL PROFILES
20	CM-1.1	CONSTRUCTION MATERIALS PLAN - SOUTH
21	CM-1.2	CONSTRUCTION MATERIALS PLAN - NORTH
22	CM-2	CONSTRUCTION MATERIALS DETAILS
23	CM-3	CONSTRUCTION MATERIALS DETAILS
24	CM-4	CONSTRUCTION MATERIALS DETAILS
25	S-1	STRUCTURAL PLAN
26	S-2	PIER AND STEPS PLAN
27	S-3	STRUCTURAL DETAILS
28	S-4	STRUCTURAL SECTIONS SHEET 1
29	S-5	STRUCTURAL SECTIONS SHEET 2
30	S-6	STRUCTURAL SECTIONS SHEET 3
31	I-1.1	IRRIGATION PLAN - SOUTH
32	I-1.2	IRRIGATION PLAN - NORTH
33	I-2.1	IRRIGATION DETAILS
34	I-2.2	IRRIGATION DETAILS
35	L-1.1	PLANT SCHEDULE AND PLANTING PLAN - SOUTH
36	L-1.2	PLANTING PLAN - NORTH
37	L-2	PLANTING DETAILS

ONE INCH
AT FULL SIZE, IF NOT ONE INCH SCALE ACCORDINGLY

PERMIT SET

K:\Projects\1006-City of Kirkland\David Brink Park Shoreline Renovation\Construction Plans\1006-PL-Cover Sheet.dwg G-1 COVER SHEET

Sep 01, 2020 3:12pm cwee

ANCHOR QEA

CITY OF KIRKLAND WASHINGTON
123 Fifth Ave
Kirkland, WA 98033
(425) 587-3300

STATE OF WASHINGTON
ANNA HOOK SPOONER
NO. 1245 EXP. 08/31/2021
LICENSED LANDSCAPE ARCHITECT

REVISIONS

REV	DATE	BY	APP'D	DESCRIPTION

DESIGNED BY: A. SPOONER
DRAWN BY: C. WEE/C. HEWETT
CHECKED BY: P. HUMMEL
APPROVED BY: P. HUMMEL
SCALE: AS SHOWN
DATE: JUNE 2020

DAVID E. BRINK PARK SHORELINE RENOVATION

COVER SHEET

G-1

SHEET # 1 OF 37

COK PW Dept
Approved Construction
Plans For LSM20-06180
Jamie Ward
4/2/2021

PCD APPROVED SITE PLAN
Any proposed changes to the approved site plan, such as but not limited to added hard surfaces, HVAC units, tree removals and accessory structures, must be submitted to the Building Department as a revision to the building permit for review and approval by all departments prior to implementation.

WORK MUST MATCH APPROVED SHR20-00202 PLANS. ANY CHANGES MUST BE RESUBMITTED TO THE PLANNING DEPARTMENT FOR REVIEW.

NOTICE
HOURS OF WORK: 7AM TO 8PM MON-FRI
9AM TO 6PM SAT. NO WORK SUNDAYS & HOLIDAYS (PER KZC SEC. 115.25)
Exceptions must be approved in writing by Planning Official.

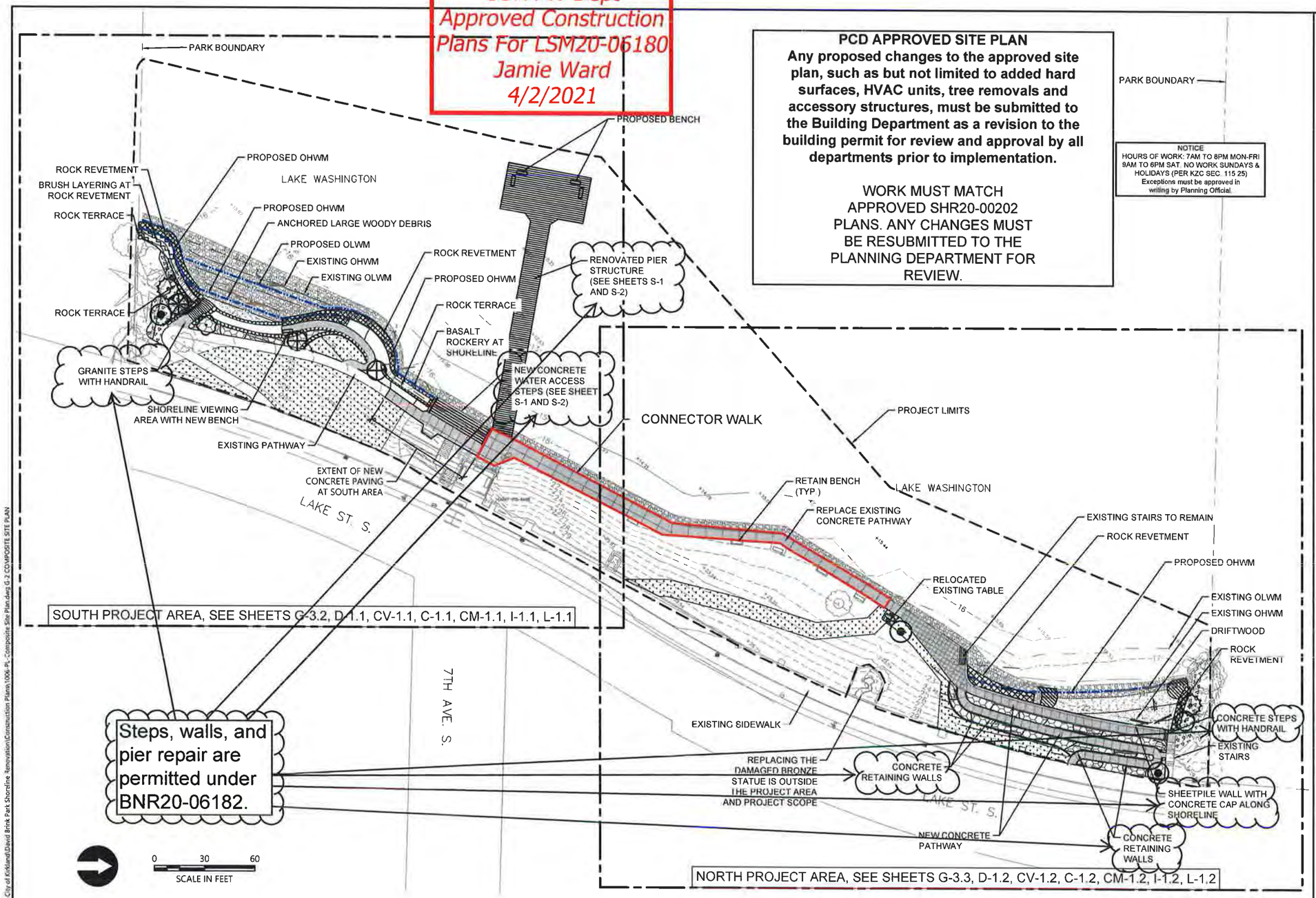

LEGEND:

- PARK BOUNDARY
- PROJECT LIMITS
- EXISTING CONTOUR
- EXISTING ORDINARY HIGH WATER MARK (OHWM)
- EXISTING ORDINARY LOW WATER MARK (OLWM)
- EXISTING TREE
- PROPOSED CONTOUR
- PROPOSED OHWM
- PROPOSED OLWM
- PROPOSED CONCRETE PATHWAY
- PROPOSED CONCRETE PATHWAY WITH DECORATIVE PAVING
- EXISTING CONCRETE PATHWAY SURFACE REPAIR AREA
- CONCRETE SEATWALL
- PIFR GRATING
- BEACH SAND
- HABITAT GRAVEL
- COBBLE UNDERLAYMENT
- BASALT ROCKERY AT SHORELINE
- BASALT ROCK TERRACE (MAX 29" EXPOSED HEIGHT)
- ROCK REVETMENT (2:1 SLOPE MAX)
- BRUSH LAYERING AT ROCK REVETMENT
- NATIVE GROUNDCOVERS AND LOW SHRUBS - SHADE
- NATIVE GROUNDCOVERS AND LOW SHRUBS - SUN
- ORNAMENTAL GROUNDCOVERS AND PERENNIALS
- TREES
- LAWN RESTORATION AREA
- PROPOSED BENCH
- EXISTING BENCH TO REMAIN
- EXISTING PICNIC TABLE SALVAGED AND RELOCATED ON-SITE
- DRIFTWOOD WITH ROOTWADS
- DRIFTWOOD
- CONNECTOR WALK

NOTES:

1. HORIZONTAL DATUM: WASHINGTON STATE PLANE NORTH ZONE, NORTH AMERICAN DATUM OF 1983 (NAD83), U.S. SURVEY FEET
2. VERTICAL DATUM: NAVD 88
3. SURVEY PROVIDED BY STANTEC, INC IN MARCH 2019

ONE INCH
AT FULL SIZE, IF NOT ONE INCH SCALE ACCORDINGLY

PERMIT SET

K:\Projects\1006-City of Kirkland\David Brink Park Shoreline Renovation\Construction Plans\1006-PL-Composite Site Plan.dwg G-2 COMPOSITE SITE PLAN
Sep 01, 2020 3:12pm cwee

ANCHOR QEA

CITY OF KIRKLAND WASHINGTON
123 Fifth Ave
Kirkland, WA 98033
(425) 587-3300

STATE OF WASHINGTON — ANNA HOOK SPOONER — NO. 2345 EXP. 06/30/2021 — LICENSED LANDSCAPE ARCHITECT

REVISIONS

REV	DATE	BY	APP'D	DESCRIPTION

DESIGNED BY: A. SPOONER
DRAWN BY: C. WEE/C. HEWETT
CHECKED BY: P. HUMMEL
APPROVED BY: P. HUMMEL
SCALE: AS SHOWN
DATE: JUNE 2020

DAVID E. BRINK PARK SHORELINE RENOVATION

COMPOSITE SITE PLAN

G-2

SHEET # 2 OF 37

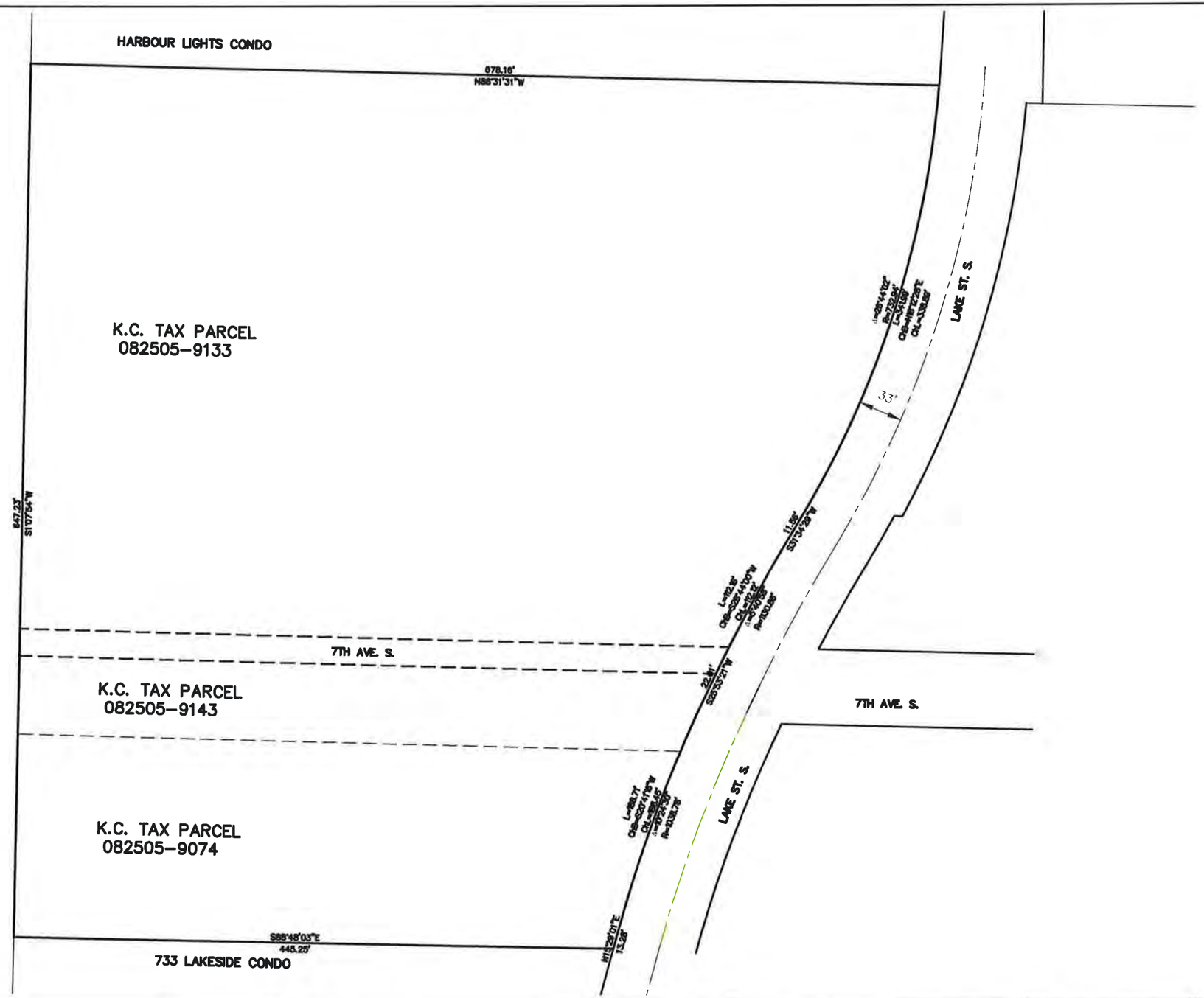

COK PW Dept
Approved Construction
Plans For LSM20-06180
Jamie Ward
4/2/2021

BOUNDARY SURVEY INFORMATION

NORTH AND SOUTH PROPERTY LINES DERIVED FROM BOUNDARY SURVEY TO REPRODUCE THE SOUTH LINE OF HARBOUR LIGHTS CONDO AND THE NORTH LINE OF 733 LAKESIDE CONDO. RECORD OF SURVEY TO BE RECORDED AT A LATER DATE DESCRIBING CONTROL AND FIT USED. RIGHT OF WAY OF LAKE STREET ACCEPTED MONUMENTATION FIT OF PREVIOUS SURVEYS TO THE EAST, NORTH OF 7TH AVE. S. AND ACCEPTED MONUMENTATION FIT OF RIGHT OF WAY PER WATER'S EDGE CONDO, SUNSET CONDO, AND 733 LAKESIDE CONDO. AREA SOUTH OF SUBJECT PROPERTY, AREA IN GREEN DID NOT FIT MONUMENTATION ACCEPTING THESE PAST SURVEYS. SURVEYOR FIT IN A SMALL TANGENT AND RADIUS SHOWN TO JOIN NORTH AND SOUTH PIECES TANGENT. RECOMMEND THIS SOLUTION BE USED FOR PARK PROPERTY ONLY (WEST OF CENTERLINE) AS PROPERTIES EAST OF CENTERLINE HAVE APPARENTLY USED DIFFERENT SOLUTIONS.

NOTES:

1. HORIZONTAL DATUM: WASHINGTON STATE PLANE NORTH ZONE, NORTH AMERICAN DATUM OF 1983 (NAD83), U.S. SURVEY FEET
2. VERTICAL DATUM: NAVD 88
3. SURVEY PROVIDED BY STANTEC, INC IN MARCH 2019
4. REFER TO SHEET G-3.2 AND G-3.3 FOR MONUMENT LOCATIONS AND CONTROL
5. REFER TO SHEETS CV-1.1 AND CV-1.2 FOR COORDINATE LOCATIONS OF MONUMENTS AND OTHER FEATURES

0 40 80
SCALE IN FEET

ONE INCH
AT FULL SIZE, IF NOT ONE INCH SCALE ACCORDINGLY

PERMIT SET

ANCHOR QEA

CITY OF KIRKLAND WASHINGTON

123 Fifth Ave
Kirkland, WA 98033
(425) 587-3300

REVISIONS				
REV	DATE	BY	APP'D	DESCRIPTION

DESIGNED BY: -
DRAWN BY: STANTEC
CHECKED BY: STANTEC
APPROVED BY: STANTEC
SCALE: AS SHOWN
DATE: MARCH 2019

DAVID E. BRINK PARK SHORELINE RENOVATION

BOUNDARY SURVEY

G-3.1

SHEET # 3 OF 37

Sep 01, 2020 1:12pm owee K:\Projects\1006-City of Kirkland\David Brink Park Shoreline Renovation\Construction Plans\1006-PL-Existing.dwg G-3.1 BOUNDARY SURVEY

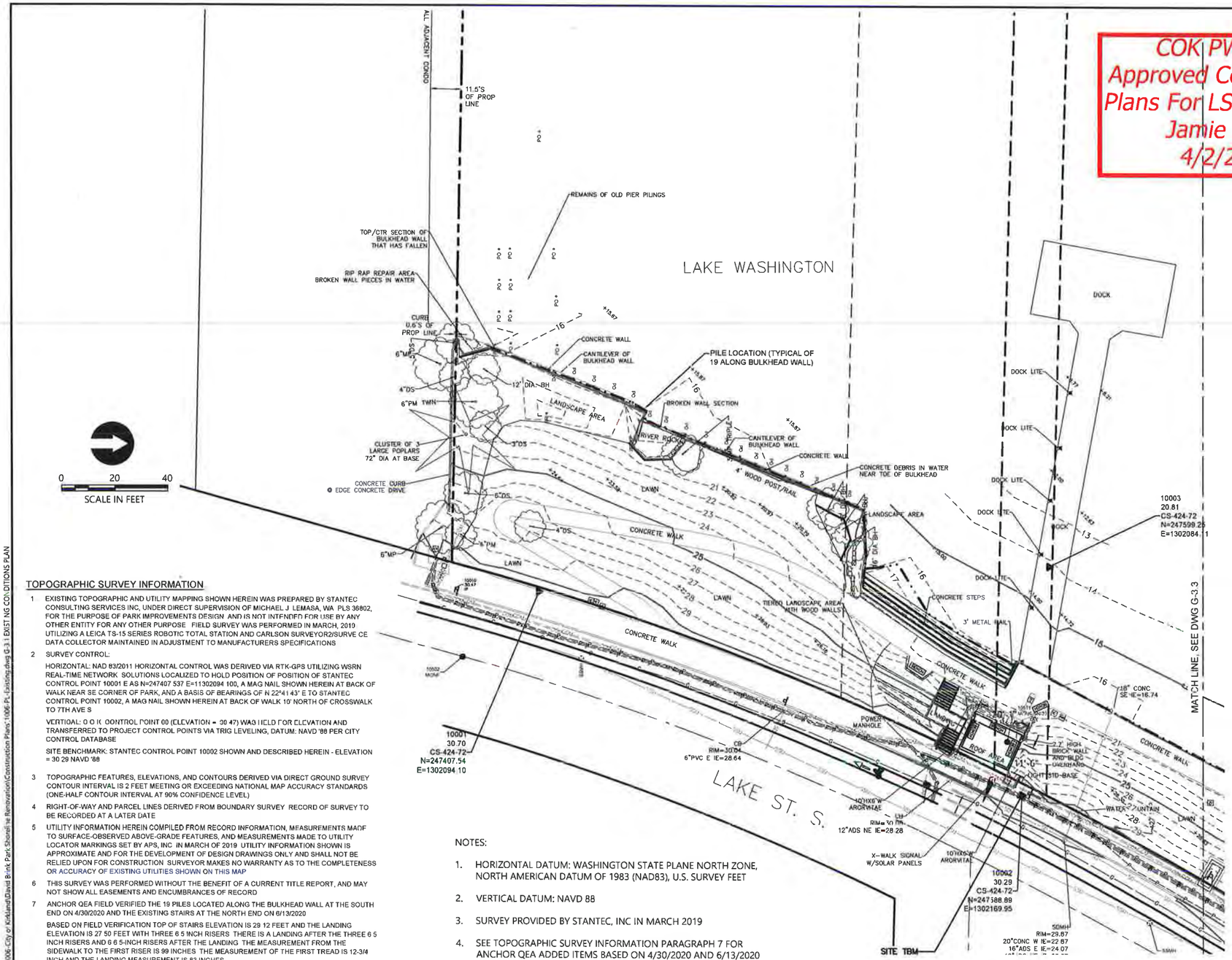

COK PW Dept
Approved Construction
Plans For LSM20-06180
Jamie Ward
4/2/2021

LEGEND

- APPROXIMATE OHWM
- APPROXIMATE OLWM
- CB CATCH BASIN
- SDMH STORM MANHOLE
- SDI STORM INVERT
- SSMH SANITARY MANHOLE
- PO POST (ALSO STATUE)
- WV WATER VALVE
- FH FIRE HYDRANT
- WM WATER METER
- GV GAS VALVE
- UP UTILITY POLE
- PO POST
- GB GARBAGE CONTAINER
- RS SIGN
- EDGE OF CONCRETE
- EDGE OF GRAVEL
- EDGE OF PAVEMENT
- FACE / BACK OF CURB
- X FENCE
- TOPOGRAPHY BREAKLINE
- SSU SANITARY SEWER
- SD STORMDRAIN
- G GAS LOCATES
- P POWER LOCATES
- W WATER LOCATES
- COM TELE-COMMUNICATION LOCATES
- ROCKERY
- HEDGE
- PWR POWER UTILITY BOX
- CV CONCRETE VAULT
- COM COMMUNICATION UTILITY BOX
- UB UTILITY BOX
- IC IRRIGATION CONTROL BOX
- TELE-COMMUNICATION PEDESTAL
- CROSS WALK CONTROL / LIGHT
- ROADWAY MONUMENT
- DS DECIDUOUS
- CF CONIFEROUS
- CW COTTONWOOD
- MP MAPLE
- PM PLUM
- PR POPLAR
- 28.41 SPOT ELEV
- BR BUSH
- O SR SPRINKLER HEAD

TOPOGRAPHIC SURVEY INFORMATION

1. EXISTING TOPOGRAPHIC AND UTILITY MAPPING SHOWN HEREIN WAS PREPARED BY STANTEC CONSULTING SERVICES INC, UNDER DIRECT SUPERVISION OF MICHAEL J LEMASA, WA PLS 36802, FOR THE PURPOSE OF PARK IMPROVEMENTS DESIGN AND IS NOT INTENDED FOR USE BY ANY OTHER ENTITY FOR ANY OTHER PURPOSE FIELD SURVEY WAS PERFORMED IN MARCH, 2019 UTILIZING A LEICA TS-15 SERIES ROBOTIC TOTAL STATION AND CARLSON SURVEYOR2/SURVE CE DATA COLLECTOR MAINTAINED IN ADJUSTMENT TO MANUFACTURERS SPECIFICATIONS
2. SURVEY CONTROL:

   HORIZONTAL: NAD 83/2011 HORIZONTAL CONTROL WAS DERIVED VIA RTK-GPS UTILIZING WSRN REAL-TIME NETWORK SOLUTIONS LOCALIZED TO HOLD POSITION OF POSITION OF STANTEC CONTROL POINT 10001 E AS N=247407 537 E=11302094 100, A MAG NAIL SHOWN HEREIN AT BACK OF WALK NEAR SE CORNER OF PARK, AND A BASIS OF BEARINGS OF N 22°41 43" E TO STANTEC CONTROL POINT 10002, A MAG NAIL SHOWN HEREIN AT BACK OF WALK 10' NORTH OF CROSSWALK TO 7TH AVE S

   VERTICAL: O O K CONTROL POINT 00 (ELEVATION = 30 47) WAS HELD FOR ELEVATION AND TRANSFERRED TO PROJECT CONTROL POINTS VIA TRIG LEVELING, DATUM: NAVD '88 PER CITY CONTROL DATABASE

   SITE BENCHMARK: STANTEC CONTROL POINT 10002 SHOWN AND DESCRIBED HEREIN - ELEVATION = 30 29 NAVD '88
3. TOPOGRAPHIC FEATURES, ELEVATIONS, AND CONTOURS DERIVED VIA DIRECT GROUND SURVEY CONTOUR INTERVAL IS 2 FEET MEETING OR EXCEEDING NATIONAL MAP ACCURACY STANDARDS (ONE-HALF CONTOUR INTERVAL AT 90% CONFIDENCE LEVEL)
4. RIGHT-OF-WAY AND PARCEL LINES DERIVED FROM BOUNDARY SURVEY RECORD OF SURVEY TO BE RECORDED AT A LATER DATE
5. UTILITY INFORMATION HEREIN COMPILED FROM RECORD INFORMATION, MEASUREMENTS MADE TO SURFACE-OBSERVED ABOVE-GRADE FEATURES, AND MEASUREMENTS MADE TO UTILITY LOCATOR MARKINGS SET BY APS, INC IN MARCH OF 2019 UTILITY INFORMATION SHOWN IS APPROXIMATE AND FOR THE DEVELOPMENT OF DESIGN DRAWINGS ONLY AND SHALL NOT BE RELIED UPON FOR CONSTRUCTION SURVEYOR MAKES NO WARRANTY AS TO THE COMPLETENESS OR ACCURACY OF EXISTING UTILITIES SHOWN ON THIS MAP
6. THIS SURVEY WAS PERFORMED WITHOUT THE BENEFIT OF A CURRENT TITLE REPORT, AND MAY NOT SHOW ALL EASEMENTS AND ENCUMBRANCES OF RECORD
7. ANCHOR QEA FIELD VERIFIED THE 19 PILES LOCATED ALONG THE BULKHEAD WALL AT THE SOUTH END ON 4/30/2020 AND THE EXISTING STAIRS AT THE NORTH END ON 6/13/2020

   BASED ON FIELD VERIFICATION TOP OF STAIRS ELEVATION IS 29 12 FEET AND THE LANDING ELEVATION IS 27 50 FEET WITH THREE 6 5 INCH RISERS THERE IS A LANDING AFTER THE THREE 6 5 INCH RISERS AND 6 6 5-INCH RISERS AFTER THE LANDING THE MEASUREMENT FROM THE SIDEWALK TO THE FIRST RISER IS 99 INCHES THE MEASUREMENT OF THE FIRST TREAD IS 12-3/4 INCH AND THE LANDING MEASUREMENT IS 83 INCHES

NOTES:

1. HORIZONTAL DATUM: WASHINGTON STATE PLANE NORTH ZONE, NORTH AMERICAN DATUM OF 1983 (NAD83), U.S. SURVEY FEET
2. VERTICAL DATUM: NAVD 88
3. SURVEY PROVIDED BY STANTEC, INC IN MARCH 2019
4. SEE TOPOGRAPHIC SURVEY INFORMATION PARAGRAPH 7 FOR ANCHOR QEA ADDED ITEMS BASED ON 4/30/2020 AND 6/13/2020 FIELD VISITS

ONE INCH
AT FULL SIZE, IF NOT ONE INCH SCALE ACCORDINGLY

PERMIT SET

ANCHOR QEA

CITY OF KIRKLAND WASHINGTON

123 Fifth Ave
Kirkland, WA 98033
(425) 587-3300

REVISIONS

REV	DATE	BY	APP'D	DESCRIPTION

DESIGNED BY:
DRAWN BY: STANTEC
CHECKED BY: STANTEC
APPROVED BY: STANTEC
SCALE: AS SHOWN
DATE: MARCH 2019

DAVID E. BRINK PARK SHORELINE RENOVATION

EXISTING CONDITIONS PLAN - SOUTH

G-3.2

SHEET # 4 OF 37

K:\Projects\1106-City of Kirkland\David Brink Park Shoreline Renovation\Construction Plans\1106-PL-Existing.dwg G-3.1 EXISTING CONDITIONS PLAN
Sep 01, 2020 3:22am owes

COK PW Dept
Approved Construction
Plans For LSM20-06180
Jamie Ward
4/2/2021

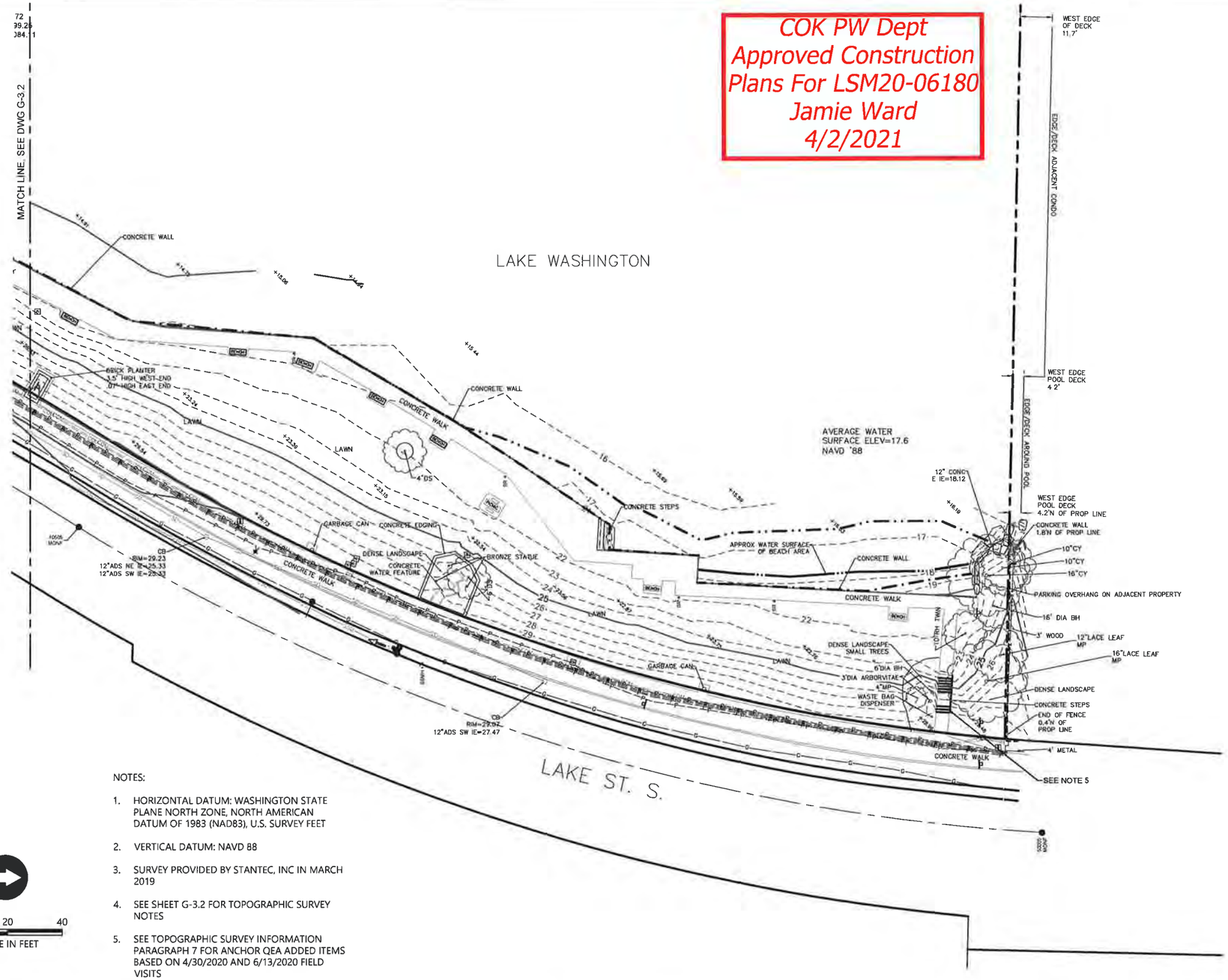

NOTES:

1. HORIZONTAL DATUM: WASHINGTON STATE PLANE NORTH ZONE, NORTH AMERICAN DATUM OF 1983 (NAD83), U.S. SURVEY FEET
2. VERTICAL DATUM: NAVD 88
3. SURVEY PROVIDED BY STANTEC, INC IN MARCH 2019
4. SEE SHEET G-3.2 FOR TOPOGRAPHIC SURVEY NOTES
5. SEE TOPOGRAPHIC SURVEY INFORMATION PARAGRAPH 7 FOR ANCHOR QEA ADDED ITEMS BASED ON 4/30/2020 AND 6/13/2020 FIELD VISITS

0 20 40
SCALE IN FEET

LEGEND

- APPROXIMATE OHWM
- APPROXIMATE OLWM
- CB CATCH BASIN
- SDMH STORM MANHOLE
- SDI STORM INVERT
- SSMH SANITARY MANHOLE
- PO POST (ALSO STATUE)
- WV WATER VALVE
- FH FIRE HYDRANT
- WM WATER METER
- GV GAS VALVE
- UP UTILITY POLE
- PO POST
- GB GARBAGE CONTAINER
- RS SIGN
- EDGE OF CONCRETE
- EDGE OF GRAVEL
- EDGE OF PAVEMENT
- FACE / BACK OF CURB
- X FENCE
- TOPOGRAPHY BREAKLINE
- SSU SANITARY SEWER
- SD STORMDRAIN
- G GAS LOCATES
- P POWER LOCATES
- W WATER LOCATES
- COM TELE-COMMUNICATION LOCATES
- ROCKERY
- HEDGE
- PWR POWER UTILITY BOX
- CV CONCRETE VAULT
- COM COMMUNICATION UTILITY BOX
- UB UTILITY BOX
- IC IRRIGATION CONTROL BOX
- TELE-COMMUNICATION PEDESTAL
- CROSS WALK CONTROL / LIGHT
- ROADWAY MONUMENT
- DS DECIDUOUS
- CF CONIFEROUS
- CW COTTONWOOD
- MP MAPLE
- PM PLUM
- PR POPLAR
- 28x1 SPOT ELEV
- BR BUSH
- O SR SPRINKLER HEAD

ONE INCH
AT FULL SIZE, IF NOT ONE INCH SCALE ACCORDINGLY

PERMIT SET

ANCHOR QEA

CITY OF KIRKLAND WASHINGTON
123 Fifth Ave
Kirkland, WA 98033
(425) 587-3300

REVISIONS				
REV	DATE	BY	APP'D	DESCRIPTION

DESIGNED BY:
DRAWN BY: STANTEC
CHECKED BY: STANTEC
APPROVED BY: STANTEC
SCALE: AS SHOWN
DATE: MARCH 2019

DAVID E. BRINK PARK SHORELINE RENOVATION

EXISTING CONDITIONS PLAN - NORTH

G-3.3

SHEET # 5 OF 37

Sep 01, 2020 3:12pm owee K:\Projects\1006-City of Kirkland\David Brink Park Shoreline Renovation\Construction Plans\1006-RL-Existing.dwg G-3.3 EXISTING CONDITIONS PLAN

COK PW Dept
Approved Construction
Plans For LSM20-06180
Jamie Ward
4/2/2021

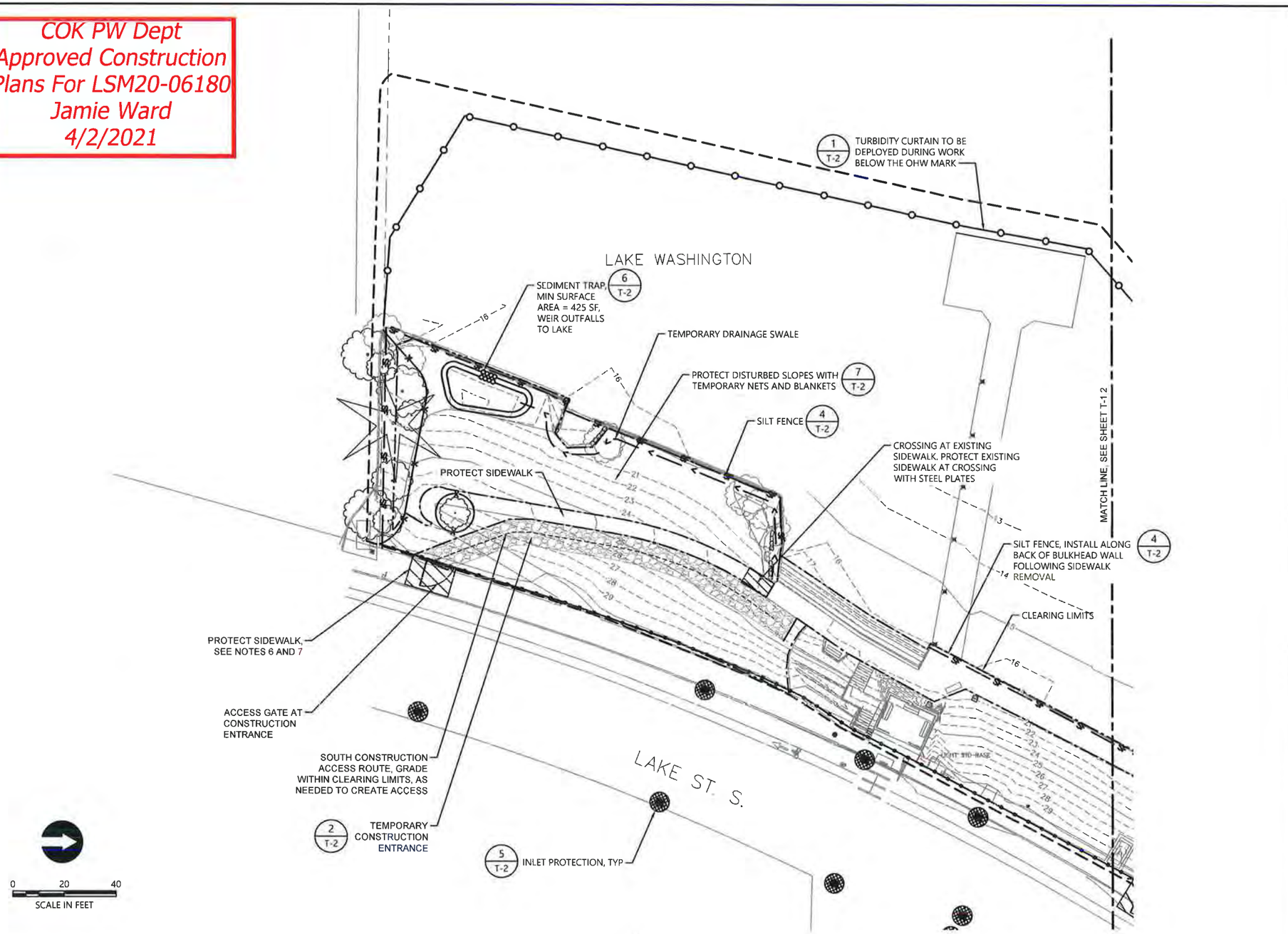

LEGEND:

- PARK BOUNDARY
- PROJECT LIMITS
- EXISTING CONTOUR
- EXISTING ORDINARY HIGH WATER MARK (OHWM)
- EXISTING ORDINARY LOW WATER MARK (OLWM)
- EXISTING ROCK BULKHEAD TO REMAIN
- PROTECT EXISTING TREES TO REMAIN
- TREE PROTECTION FENCING 3 T-2
- ACCESS GATE
- IN-WATER TURBIDITY CURTAIN SEE NOTE 5 1 T-2
- CLEARING, GRADING, AND DISTURBANCE LIMITS
- TEMPORARY CONSTRUCTION ENTRANCE 2 T-2
- SILT FENCE 4 T-2
- INLET PROTECTION 5 T-2
- TEMPORARY CONSTRUCTION FENCING
- TEMPORARY DRAINAGE SWALE
- SEDIMENT TRAP 6 T-2

NOTES:

1. HORIZONTAL DATUM: WASHINGTON STATE PLANE NORTH ZONE, NORTH AMERICAN DATUM OF 1983 (NAD83), U.S. SURVEY FEET
2. VERTICAL DATUM: NAVD 88
3. SURVEY PROVIDED BY STANTEC, INC IN MARCH 2019
4. SEE SHEET T-3 FOR TESC NOTES
5. TURBIDITY CURTAIN ALIGNMENT IS DIAGRAMMATIC. CONTRACTOR TO DEPLOY AND MAINTAIN A TURBIDITY CURTAIN AROUND WORK AREAS TO FULFILL ENVIRONMENTAL PERMIT CONDITIONS.
6. THE CONTRACTOR SHALL PROTECT THE EXISTING CURB AND SIDEWALK AT TEMPORARY CONSTRUCTION ACCESS LOCATIONS AND MAINTAIN SAFE PEDESTRIAN ACCESS ALONG THE SIDEWALK THROUGHOUT THE CONSTRUCTION PERIOD. THE CONTRACTOR SHALL USE STEEL PLATES, TIMBER MATS, OR ANOTHER APPROVED METHOD TO PROTECT THE SIDEWALK FROM DAMAGE AT TEMPORARY CONSTRUCTION ACCESS LOCATIONS. THE CONTRACTOR SHALL PROVIDE TEMPORARY ASPHALT RAMPS OR OTHER IMPROVEMENTS TO CREATE A SMOOTH TRANSITION FOR PEDESTRIANS AND BIKES FROM STEEL PLATES OR OTHER PROTECTION TO THE SIDEWALK. ANY PROTECTION SHALL ALSO MEET ADA REQUIREMENTS.
7. THE CONTRACTOR SHALL BE RESPONSIBLE FOR REPAIR OF ANY DAMAGE TO THE CURB, GUTTER, SIDEWALK, OR THE INFRASTRUCTURE IN THE LAKE STREET RIGHT-OF-WAY CAUSED BY THE WORK.

ONE INCH
AT FULL SIZE, IF NOT ONE INCH SCALE ACCORDINGLY

PERMIT SET

K:\Projects\1006-City of Kirkland\David Brink Park Shoreline Renovation\Construction Plans\1006-PL-TESC.dwg T-1.1 TESC PLAN
Sep 01, 2020 3:13pm owee

ANCHOR QEA

CITY OF KIRKLAND WASHINGTON
123 Fifth Ave
Kirkland, WA 98033
(425) 587-3300

DAVID W. RICE STATE OF WASHINGTON 40265 REGISTERED PROFESSIONAL ENGINEER

REVISIONS

REV	DATE	BY	APP'D	DESCRIPTION

DESIGNED BY: J. SEXTON
DRAWN BY: C. WEEC/C. HEWETT
CHECKED BY: P. HUMMEL
APPROVED BY: P. HUMMEL
SCALE: AS SHOWN
DATE: JUNE 2020

DAVID E. BRINK PARK SHORELINE RENOVATION

TEMPORARY EROSION AND STORMWATER CONTROL (TESC) PLAN - SOUTH

T-1.1

SHEET # 6 OF 37

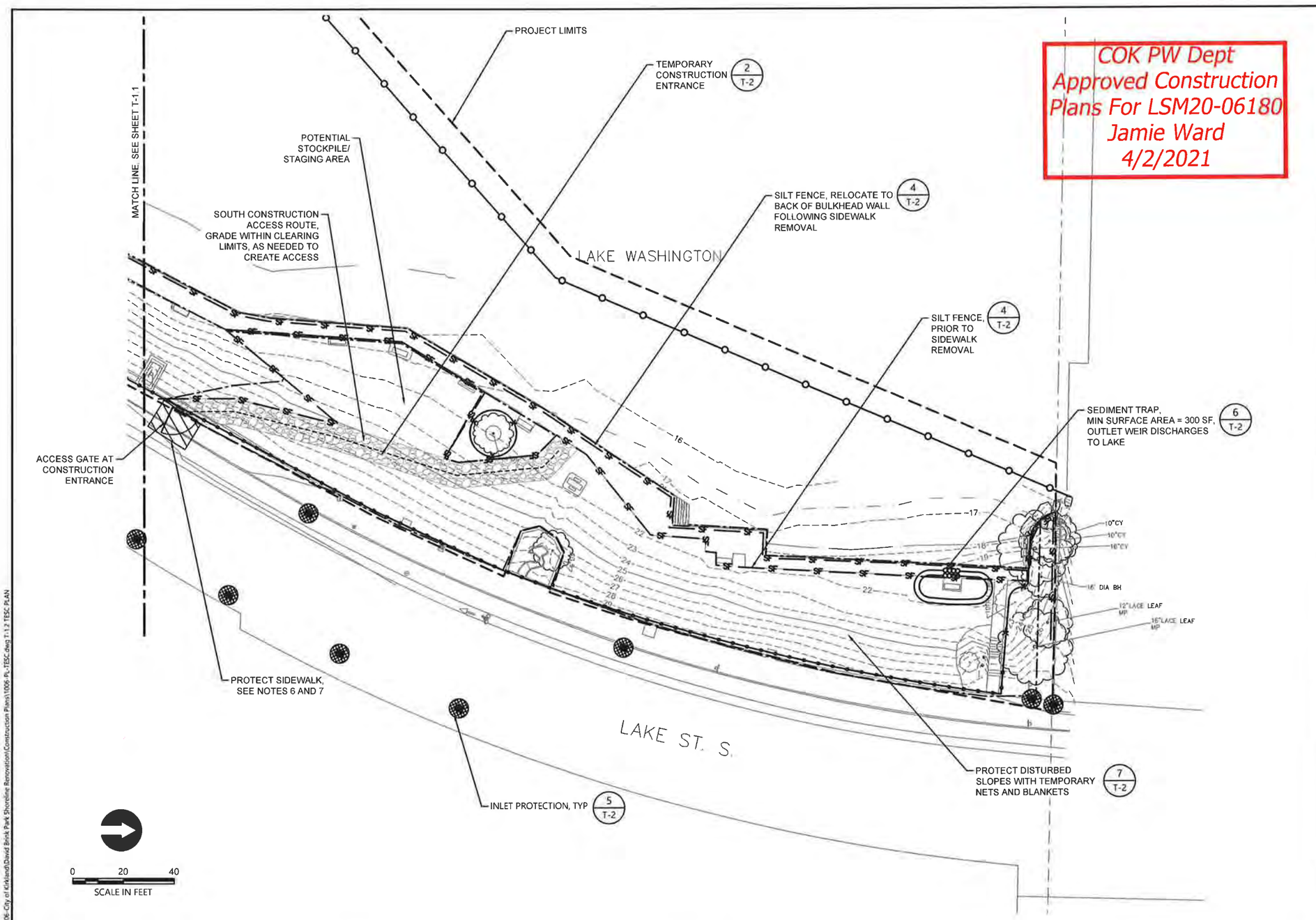

COK PW Dept Approved Construction Plans For LSM20-06180 Jamie Ward 4/2/2021

LEGEND:

- PROJECT LIMITS
- PROPERTY BOUNDARY
- CLEARING, GRADING, AND DISTURBANCE LIMITS
- EXISTING OHWM
- EXISTING OLWM
- EXISTING MAJOR CONTOUR
- EXISTING MINOR CONTOUR
- EXISTING TREE
- EXISTING STORM SEWER
- EXISTING ROCK BULKHEAD
- TREE PROTECTION FENCING 3 T-2
- ACCESS GATE
- IN-WATER TURBIDITY CURTAIN 1 T-2
- TEMPORARY CONSTRUCTION ENTRANCE 2 T-2
- SILT FENCE 4 T-2
- INLET PROTECTION 5 T-2
- TEMPORARY CONSTRUCTION FENCING
- TEMPORARY DRAINAGE SWALE
- SEDIMENT TRAP 6 T-2

NOTES:

1. HORIZONTAL DATUM: WASHINGTON STATE PLANE NORTH ZONE, NORTH AMERICAN DATUM OF 1983 (NAD83), U.S. SURVEY FEET
2. VERTICAL DATUM: NAVD 88
3. SURVEY PROVIDED BY STANTEC, INC IN MARCH 2019
4. SEE SHEET T-3 FOR TESC NOTES
5. TURBIDITY CURTAIN ALIGNMENT IS DIAGRAMMATIC. CONTRACTOR TO DEPLOY AND MAINTAIN A TURBIDITY CURTAIN AROUND WORK AREAS TO FULFILL ENVIRONMENTAL PERMIT CONDITIONS
6. THE CONTRACTOR SHALL PROTECT THE EXISTING SIDEWALK AT TEMPORARY CONSTRUCTION ACCESS LOCATIONS AND MAINTAIN SAFE PEDESTRIAN ACCESS ALONG THE SIDEWALK THROUGHOUT THE CONSTRUCTION PERIOD. THE CONTRACTOR SHALL USE STEEL PLATES, TIMBER MATS, OR ANOTHER APPROVED METHOD TO PROTECT THE SIDEWALK FROM DAMAGE AT TEMPORARY CONSTRUCTION ACCESS LOCATIONS.
7. THE CONTRACTOR SHALL BE RESPONSIBLE FOR REPAIR OF ANY DAMAGE TO THE CURB, GUTTER, SIDEWALK, OR THE INFRASTRUCTURE IN THE LAKE STREET RIGHT-OF-WAY CAUSED BY THE WORK.

ONE INCH
AT FULL SIZE, IF NOT ONE INCH SCALE ACCORDINGLY

PERMIT SET

ANCHOR QEA

CITY OF KIRKLAND WASHINGTON
123 Fifth Ave
Kirkland, WA 98033
(425) 587-3300

DAVID W. RICE — STATE OF WASHINGTON — 40265 — REGISTERED PROFESSIONAL ENGINEER

REVISIONS				
REV	DATE	BY	APP'D	DESCRIPTION

DESIGNED BY: J. SEXTON
DRAWN BY: C. WEE/C. HEWETT
CHECKED BY: P. HUMMEL
APPROVED BY: P. HUMMEL
SCALE: AS SHOWN
DATE: JUNE 2020

DAVID E. BRINK PARK SHORELINE RENOVATION

TEMPORARY EROSION AND STORMWATER CONTROL (TESC) PLAN - NORTH

T-1.2

SHEET # 7 OF 37

K:\Projects\1006-City of Kirkland\David Brink Park Shoreline Renovation\Construction Plans\1006-PL-TESC.dwg T-1.2 TESC PLAN
Sep 01, 2020 3:13pm owee

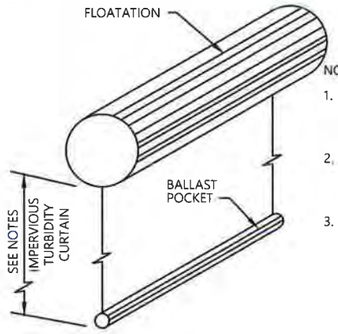

NOTES:

1. AROUND PILE DRIVING AREAS AND EXISTING PILE REMOVAL AREAS, LENGTH OF CURTAIN SHALL EXTEND TO MUDLINE FOR ALL TIDE LEVELS.
2. ALL OTHER AREAS, WHERE DEBRIS FROM DEMOLITION WORK MAY EXIST, LENGTH OF CURTAIN SHALL BE 6 FEET.
3. THE CONTRACTOR SHALL BE RESPONSIBLE FOR MAINTAINING THE TURBIDITY CURTAIN TO MAINTAIN FUNCTIONALITY OF THE TURBIDITY CURTAIN THROUGHOUT ALL TIDAL CONDITIONS AND WEATHER EXPECTED DURING THE CONSTRUCTION PERIOD, AS REQUIRED BY THE APPROVED PROJECT PERMITS.
4. SEE SPECIFICATIONS FOR MATERIAL REQUIREMENTS.

1 / T-1.1 IN-WATER TURBIDITY CURTAIN

SCALE: NOT TO SCALE

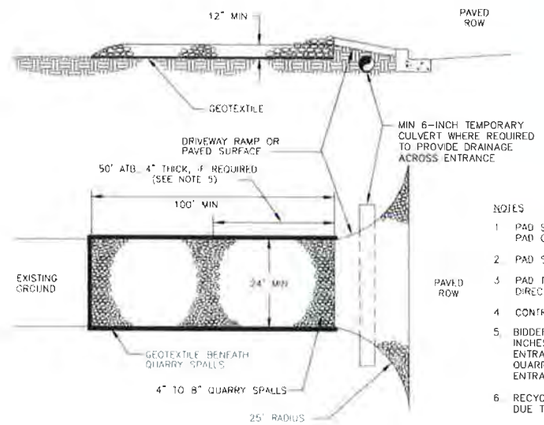

PLAT/COMMERCIAL

NOTES

1. PAD SHALL BE REMOVED AND REPLACED WHEN SOIL IS EVIDENT ON THE SURFACE OF THE PAD OR AS DIRECTED BY THE CITY CLEARING AND GRADING INSPECTOR
2. PAD SHALL BE INSTALLED IN PLANTING STRIP AS APPROPRIATE
3. PAD THICKNESS SHALL BE INCREASED IF SOIL CONDITIONS DICTATE AND/OR PER THE DIRECTION OF THE CITY CLEARING AND GRADING INSPECTOR
4. CONTRACTOR RESPONSIBLE FOR CURB & GUTTER CONDITION
5. BIDDERS SHALL ASSUME THAT 4 INCHES OF ATB IS REQUIRED UNDER A MIN OF 8 INCHES OF QUARRY SPALLS FOR THE FIRST 50 FEET OF THE CONSTRUCTION ENTRANCE, AS SHOWN. BIDDERS SHALL ASSUME THAT A MIN OF 12 INCHES OF QUARRY SPALLS IS REQUIRED FOR THE REMAINING LENGTH OF CONSTRUCTION ENTRANCE
6. RECYCLED CONCRETE SHALL NOT BE USED FOR THE CONSTRUCTION ENTRANCE DUE TO HIGH LEVELS OF PH

2 / T-1.1 CONSTRUCTION ENTRANCE

SCALE: NOT TO SCALE

SOURCE: CITY OF KIRKLAND PRE-APPROVED PLAN NO CK-E.02

COK PW Dept
Approved Construction
Plans For LSM20-06180
Jamie Ward
4/2/2021

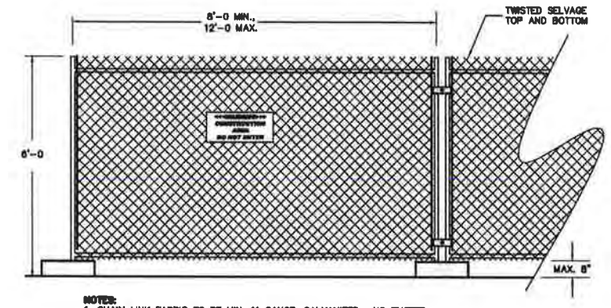

NOTES:
1. CHAIN LINK FABRIC TO BE MIN. 11 GAUGE, GALVANIZED. NO RUSTED OR EXCESSIVELY MALFORMED FABRIC.
2. FENCE BASES SHALL BE OF SUFFICIENT WEIGHT and/or SPREAD TO ADEQUATELY SUPPORT EACH PANEL.
3. PANEL-TO-PANEL CONNECTIONS SHALL BE MADE AT A MIN. TWO LOCATIONS PER CONNECTION UNLESS OTHERWISE APPROVED.
4. PROVIDE CONSTRUCTION WARNING SIGNAGE 50'O.C. ALONG FENCING INSTALLATION.

3 / T-1.1 TEMPORARY CONSTRUCTION AND TREE PROTECTION FENCING

SCALE: NOT TO SCALE

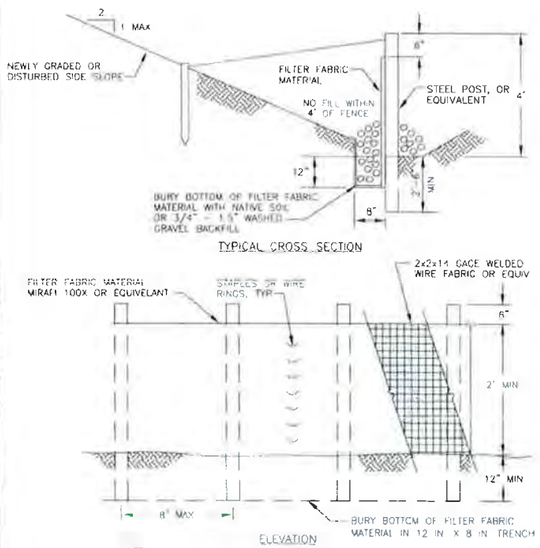

4 / T-1.1 SILT FENCE

SCALE: NOT TO SCALE

SOURCE: CITY OF KIRKLAND PRE-APPROVED PLAN NO CK-E.03

NOTES

1. PREFAB FENCE ALLOWED IF REINFORCED AND APPROVED BY CITY INSPECTOR
2. FENCE SHALL NOT BE INSTALLED ON SLOPES STEEPER THAN 2:1
3. JOINTS IN FILTER FABRIC SHALL BE OVERLAPPED 6 INCHES AT POST
4. USE STAPLES, WIRE RINGS, OR EQUIVALENT TO ATTACH FABRIC TO FENCE
5. REMOVE SEDIMENT WHEN IT REACHES 1/3 FENCE HEIGHT
6. LOCATION OF FENCING SHALL BE AS SHOWN ON APPROVED PLANS OR AS DIRECTED BY THE CITY
7. MAXIMUM 100' SHEET OR OVERLAND FLOW PATH LENGTH TO SILT FENCE
8. DO NOT DIRECT FLOWS GREATER THAN 0.5 CFS TO FENCE
9. SILT FENCE SHOULD NOT BE INSTALLED IN STREAMS OR V-SHAPED DITCHES

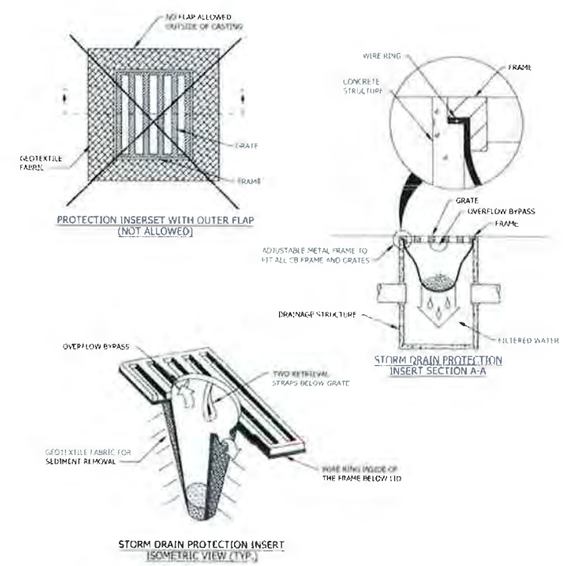

5 / T-1.1 INLET PROTECTION

SCALE: NOT TO SCALE

SOURCE: CITY OF KIRKLAND PRE-APPROVED PLAN NO CK-E.11

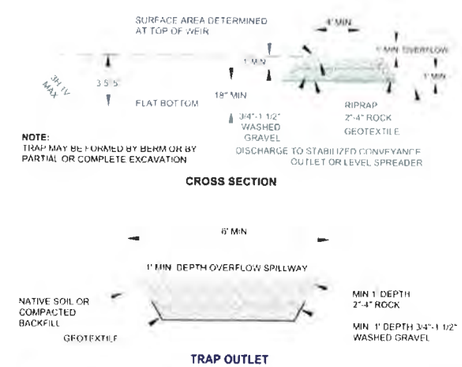

6 / T-1.1 SEDIMENT TRAP

SCALE: NOT TO SCALE

SOURCE: WSDOT 2016 SURFACE WATER DESIGN MANUAL - APPENDIX D

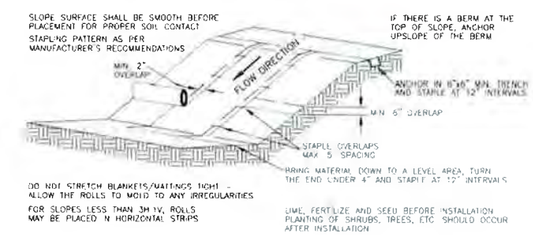

NET & BLANKET INSTALLATION

NOT TO SCALE

NOTES.

1. IF BLANKET IS NOT LONG ENOUGH TO COVER THE ENTIRE SLOPE LENGTH, THE TRAILING EDGE OF THE UPPER BLANKET SHOULD OVERLAP THE LEADING EDGE OF THE LOWER BLANKET BY AT LEAST 6 INCHES AND BE STAPLED.
2. DARK WOOD CHIP MULCH SHALL BE PLACED OVER NETS, BUT IS NOT REQUIRED FOR BLANKETS. SEE SPECIFICATIONS FOR MULCH REQUIREMENTS
3. USE 100% BIODEGRADABLE BLANKETS IN SENSITIVE AREAS
4. MAINTAIN GOOD CONTACT WITH THE GROUND. EROSION MUST NOT OCCUR BENEATH THE BLANKET
5. INSPECT NETS AND BLANKETS AFTER EACH SIGNIFICANT STORM; MAINTAIN AND REPAIR PROMPTLY

7 / T-1.1 TEMPORARY NETS AND BLANKETS

SCALE: NOT TO SCALE

SOURCE: CITY OF KIRKLAND PRE-APPROVED PLAN NO CK-E.06

ONE INCH — AT FULL SIZE, IF NOT ONE INCH SCALE ACCORDINGLY

PERMIT SET

ANCHOR QEA

CITY OF KIRKLAND WASHINGTON

123 Fifth Ave
Kirkland, WA 98033
(425) 587-3300

DAVID W. RICE — STATE OF WASHINGTON — 40265 — REGISTERED PROFESSIONAL ENGINEER

REVISIONS				
REV	DATE	BY	APP'D	DESCRIPTION

DESIGNED BY: J SEXTON
DRAWN BY: C WEE/C HEWETT
CHECKED BY: P HUMMEL
APPROVED BY: P HUMMEL
SCALE: AS SHOWN
DATE: JUNE 2020

DAVID E. BRINK PARK SHORELINE RENOVATION

TESC DETAILS

T-2

SHEET NO 8 OF 37

Sep 01, 2020 3:16pm cameron K:\Projects\1006-City of Kirkland\David Brink Park Shoreline Renovation\Construction Plans\CAD\R-TESC Notes and Details.dwg T-2 TESC NOTES AND DETAILS

CITY OF KIRKLAND STANDARD EROSION/SEDIMENTATION CONTROL - PLAN NOTES

1. THE APPROVED CONSTRUCTION SEQUENCE SHALL BE AS FOLLOWS:

A. CONDUCT PRE-CONSTRUCTION MEETING.
B. FLAG OR FENCE CLEARING LIMITS.
C. POST SIGN WITH NAME AND PHONE NUMBER OF TESC SUPERVISOR.
D. INSTALL CATCH BASIN PROTECTION IF REQUIRED.
E. INSTALL PERIMETER PROTECTION (SILT FENCE, BRUSH BARRIER, ETC.).
F. GRADE AND INSTALL CONSTRUCTION ENTRANCE(S).
G. CONSTRUCT SEDIMENT PONDS AND TRAPS.
H. GRADE AND STABILIZE CONSTRUCTION ROADS.
I. CONSTRUCT SURFACE WATER CONTROLS (INTERCEPTOR DIKES, PIPE SLOPE DRAINS, ETC.) SIMULTANEOUSLY WITH CLEARING AND GRADING FOR PROJECT DEVELOPMENT.
J. MAINTAIN EROSION CONTROL MEASURE IN ACCORDANCE WITH CITY OF KIRKLAND STANDARDS AND MANUFACTURER'S RECOMMENDATIONS.
K. RELOCATE EROSION CONTROL MEASURES OR INSTALL NEW MEASURES SO THAT AS SITE CONDITIONS CHANGE, THE EROSION AND SEDIMENT CONTROL IS ALWAYS IN ACCORDANCE WITH THE CITY TESC MINIMUM REQUIREMENTS.
L. COVER ALL AREAS WITHIN THE SPECIFIED TIME FRAME WITH STRAW, WOOD FIBER MULCH, COMPOST, PLASTIC SHEETING, CRUSHED ROCK OR EQUIVALENT.
M. STABILIZE ALL AREAS THAT REACH FINAL GRADE WITHIN 7 DAYS.
N. SEED OR SOD ANY AREAS TO REMAIN UNWORKED FOR MORE THAN 30 DAYS.
O. UPON COMPLETION OF THE PROJECT, ALL DISTURBED AREAS MUST BE STABILIZED AND BEST MANAGEMENT PRACTICES REMOVED IF APPROPRIATE.

2. ALL WORK AND MATERIALS SHALL BE IN ACCORDANCE WITH CITY OF KIRKLAND STANDARDS AND SPECIFICATIONS.

3. THE BOUNDARIES OF THE CLEARING LIMITS SHOWN ON THIS PLAN SHALL BE SET BY SURVEY AND CLEARLY FLAGGED IN THE FIELD BY A CLEARING CONTROL FENCE PRIOR TO CONSTRUCTION. DURING THE CONSTRUCTION PERIOD, NO DISTURBANCE OR REMOVAL OF ANY GROUND COVER BEYOND THE FLAGGED
CLEARING LIMITS SHALL BE PERMITTED. THE FLAGGING SHALL BE MAINTAINED BY THE PERMITTEE/CONTRACTOR FOR THE DURATION OF CONSTRUCTION.

4. APPROVAL OF THIS EROSION/SEDIMENTATION CONTROL (ESC) PLAN DOES NOT CONSTITUTE AN APPROVAL OF PERMANENT ROAD OR DRAINAGE DESIGN (E.G., SIZE AND LOCATION OF ROADS, PIPES, RESTRICTORS, CHANNELS, RETENTION FACILITIES, UTILITIES, ETC.).

5. THE IMPLEMENTATION OF THIS ESC PLAN AND THE CONSTRUCTION, MAINTENANCE, REPLACEMENT, AND UPGRADING OF THESE ESC FACILITIES IS THE RESPONSIBILITY OF THE PERMITTEE/CONTRACTOR UNTIL ALL CONSTRUCTION IS APPROVED.

6. A COPY OF THE APPROVED ESC PLANS MUST BE ON THE JOB SITE WHENEVER CONSTRUCTION IS IN PROGRESS.

7. THE ESC FACILITIES SHOWN ON THIS PLAN MUST BE CONSTRUCTED PRIOR TO OR IN CONJUNCTION WITH ALL CLEARING AND GRADING ACTIVITIES IN SUCH A MANNER AS TO ENSURE THAT SEDIMENT-LADEN WATER DOES NOT ENTER THE DRAINAGE SYSTEM OR VIOLATE APPLICABLE WATER STANDARDS.WHEREVER POSSIBLE, MAINTAIN NATURAL VEGETATION FOR SILT CONTROL.

8. THE ESC FACILITIES SHALL BE CONSTRUCTED IN ACCORDANCE WITH THE DETAILS ON THE APPROVED PLANS. LOCATIONS MAY BE MOVED TO SUIT FIELD CONDITIONS, SUBJECT TO APPROVAL BY THE ENGINEER AND THE CITY OF KIRKLAND INSPECTOR.

9. THE ESC FACILITIES SHOWN ON THIS PLAN ARE THE MINIMUM REQUIREMENTS FOR ANTICIPATED SITE CONDITIONS. DURING THE CONSTRUCTION PERIOD, THESE ESC FACILITIES SHALL BE UPGRADED (E.G., ADDITIONAL SUMPS, RELOCATION OF DITCHES AND SILT FENCES, ETC.) AS NEEDED FOR UNEXPECTED STORM EVENTS. ADDITIONALLY, MORE ESC FACILITIES MAY BE REQUIRED TO ENSURE COMPLETE
SILTATION CONTROL. THEREFORE, DURING THE COURSE OF CONSTRUCTION IT SHALL BE THE OBLIGATION AND RESPONSIBILITY OF THE CONTRACTOR TO ADDRESS ANY NEW CONDITIONS THAT MAY BE CREATED BY HIS ACTIVITIES AND TO PROVIDE ADDITIONAL FACILITIES OVER AND ABOVE THE MINIMUM REQUIREMENTS AS MAY BE NEEDED.

10. THE ESC FACILITIES SHALL BE INSPECTED BY THE PERMITTEE/CONTRACTOR DAILY DURING NON-RAINFALL PERIODS, EVERY HOUR (DAYLIGHT) DURING A RAINFALL EVENT, AND AT THE END OF EVERY RAINFALL, AND MAINTAINED AS NECESSARY TO ENSURE THEIR CONTINUED FUNCTIONING. IN ADDITION,
TEMPORARY SILTATION PONDS AND ALL TEMPORARY SILTATION CONTROLS SHALL BE MAINTAINED IN A SATISFACTORY CONDITION UNTIL SUCH TIME THAT CLEARING AND/OR CONSTRUCTION IS COMPLETED, PERMANENT DRAINAGE FACILITIES ARE OPERATIONAL, AND THE POTENTIAL FOR EROSION HAS PASSED.
WRITTEN RECORDS SHALL BE KEPT DOCUMENTING THE REVIEWS OF THE ESC FACILITIES.

11. THE ESC FACILITIES ON INACTIVE SITES SHALL BE INSPECTED AND MAINTAINED A MINIMUM OF ONCE A MONTH OR WITHIN 48 HOURS FOLLOWING A STORM EVENT.

12. STABILIZED CONSTRUCTION ENTRANCES SHALL BE INSTALLED AT THE BEGINNING OF CONSTRUCTION AND MAINTAINED FOR THE DURATION OF THE PROJECT. ADDITIONAL MEASURES, SUCH AS WASH PADS, MAY BE REQUIRED TO ENSURE THAT ALL PAVED AREAS ARE KEPT CLEAN FOR THE DURATION OF THE PROJECT.

13. ALL DENUDED SOILS MUST BE STABILIZED WITH AN APPROVED TESC METHOD (E.G. SEEDING, MULCHING, PLASTIC COVERING, CRUSHED ROCK) WITHIN THE FOLLOWING TIMELINES:

- MAY 1 TO SEPTEMBER 30 – SOILS MUST BE STABILIZED WITHIN 7 DAYS OF GRADING.
- OCTOBER 1 TO APRIL 30 – SOILS MUST BE STABILIZED WITHIN 2 DAYS OF GRADING.
- STABILIZE SOILS AT THE END OF THE WORKDAY PRIOR TO A WEEKEND, HOLIDAY, OR PREDICTED RAIN EVENT.

14. WHERE SEEDING FOR TEMPORARY EROSION CONTROL IS REQUIRED, FAST GERMINATING GRASSES SHALL BE APPLIED AT AN APPROPRIATE RATE (EXAMPLE: ANNUAL OR PERENNIAL RYE APPLIED AT APPROXIMATELY 80 POUNDS PER ACRE).

15. WHERE STRAW MULCH IS REQUIRED FOR TEMPORARY EROSION CONTROL, IT SHALL BE APPLIED AT A MINIMUM THICKNESS OF 2".

16. ALL LOTS ADJOINING OR HAVING ANY NATIVE GROWTH PROTECTION EASEMENTS (NGPE) SHALL HAVE A 6' HIGH TEMPORARY CONSTRUCTION FENCE (CHAIN LINK WITH PIER BLOCKS) SEPARATING THE LOT (OR BUILDABLE PORTIONS OF THE LOT) FROM THE AREA RESTRICTED BY THE NGPE AND SHALL BE INSTALLED PRIOR TO ANY GRADING OR CLEARING AND REMAIN IN PLACE UNTIL THE PLANNING DEPARTMENT AUTHORIZES REMOVAL.

17. CLEARING LIMITS SHALL BE DELINEATED WITH A CLEARING CONTROL FENCE. THE CLEARING CONTROL FENCE SHALL CONSIST OF A 6-FT. HIGH CHAIN LINK FENCE ADJACENT THE DRIP LINE OF TREES TO BE SAVED, WETLAND OR STREAM BUFFERS, AND SENSITIVE SLOPES. CLEARING CONTROL FENCES ALONG
WETLAND OR STREAM BUFFERS OR UPSLOPE OF SENSITIVE SLOPES SHALL BE ACCOMPANIED BY AN EROSION CONTROL FENCE. IF APPROVED BY THE CITY, A FOUR-FOOT HIGH ORANGE MESH CLEARING CONTROL FENCE MAY BE USED TO DELINEATE CLEARING LIMITS IN ALL OTHER AREAS.

18. OFF-SITE STREETS MUST BE KEPT CLEAN AT ALL TIMES. IF DIRT IS DEPOSITED ON THE PUBLIC STREET SYSTEM, THE STREET SHALL BE IMMEDIATELY CLEANED WITH POWER SWEEPER OR OTHER EQUIPMENT. ALL VEHICLES SHALL LEAVE THE SITE BY WAY OF THE CONSTRUCTION ENTRANCE AND SHALL BE CLEANED OF ALL DIRT THAT WOULD BE DEPOSITED ON THE PUBLIC STREETS.

19. ROCK FOR EROSION PROTECTION OF ROADWAY DITCHES, WHERE REQUIRED, MUST BE OF QUARRY ROCK, PLACED TO A DEPTH OF 1' AND MUST BE 4" TO 8" QUARRY SPALLS, IN ACCORDANCE WITH SECTION 9-13 OF THE WSDOT STANDARD SPECIFICATIONS.

20. IF ANY PART(S) OF THE CLEARING LIMIT BOUNDARY OR TEMPORARY EROSION/SEDIMENTATION CONTROL PLAN IS/ARE DAMAGED, IT SHALL BE REPAIRED IMMEDIATELY.

21. ALL PROPERTIES ADJACENT TO THE PROJECT SITE SHALL BE PROTECTED FROM SEDIMENT DEPOSITION AND RUNOFF.

22. AT NO TIME SHALL MORE THAN 1' OF SEDIMENT BE ALLOWED TO ACCUMULATE WITHIN A CATCH BASIN. ALL CATCH BASINS AND CONVEYANCE LINES SHALL BE CLEANED PRIOR TO PAVING. THE CLEANING OPERATION SHALL NOT FLUSH SEDIMENT-LADEN WATER INTO THE DOWNSTREAM SYSTEM.

23. ANY PERMANENT RETENTION/DETENTION FACILITY USED AS A TEMPORARY SETTLING BASIN SHALL BE MODIFIED WITH THE NECESSARY EROSION CONTROL MEASURES AND SHALL PROVIDE ADEQUATE STORAGE CAPACITY. IF THE PERMANENT FACILITY IS TO FUNCTION ULTIMATELY AS AN INFILTRATION OR
DISPERSION SYSTEM, THE FACILITY SHALL NOT BE USED AS A TEMPORARY SETTLING BASIN. NO UNDERGROUND DETENTION TANK, DETENTION VAULT, OR SYSTEM WHICH BACKS UNDER OR INTO A POND SHALL BE USED AS A TEMPORARY SETTLING BASIN.

24. ALL EROSION/SEDIMENTATION CONTROL PONDS WITH A DEAD STORAGE DEPTH EXCEEDING 6" MUST HAVE A PERIMETER FENCE WITH A MINIMUM HEIGHT OF 3'.

25. THE WASHED GRAVEL BACKFILL ADJACENT TO THE FILTER FABRIC FENCE SHALL BE REPLACED AND THE FILTER FABRIC CLEANED IF IT IS NONFUNCTIONAL BY EXCESSIVE SILT ACCUMULATION AS DETERMINED BY THE CITY OF KIRKLAND. ALSO, ALL INTERCEPTOR SWALES SHALL BE CLEANED IF SILT ACCUMULATION EXCEEDS ONE-QUARTER DEPTH.

26. PRIOR TO THE OCTOBER 1 OF EACH YEAR (THE BEGINNING OF THE WET SEASON), ALL DISTURBED AREAS SHALL BE REVIEWED TO IDENTIFY WHICH ONES CAN BE SEEDED IN PREPARATION FOR THE WINTER RAINS. THE IDENTIFIED DISTURBED AREA SHALL BE SEEDED WITHIN ONE WEEK AFTER OCTOBER 1. A SITE PLAN DEPICTING THE AREAS TO BE SEEDED AND THE AREAS TO REMAIN
UNCOVERED SHALL BE SUBMITTED TO THE PUBLIC WORKS CONSTRUCTION INSPECTOR. THE INSPECTOR CAN REQUIRE SEEDING OF ADDITIONAL AREAS IN ORDER TO PROTECT SURFACE WATERS, ADJACENT PROPERTIES, OR DRAINAGE FACILITIES.

27. ANY AREA TO BE USED FOR INFILTRATION OR PERVIOUS PAVEMENT (INCLUDING A 5-FOOT BUFFER) MUST BE SURROUNDED BY SILT FENCE PRIOR TO CONSTRUCTION AND UNTIL FINAL STABILIZATION OF THE SITE TO PREVENT SOIL COMPACTION AND SILTATION BY CONSTRUCTION ACTIVITIES.

28. IF THE TEMPORARY CONSTRUCTION ENTRANCE IS LOCATED IN THE SAME AREA TO BE USED FOR INFILTRATION OR PERVIOUS PAVEMENT, 6" OF SEDIMENT BELOW THE GRAVEL CONSTRUCTION ENTRANCE SHALL BE REMOVED PRIOR TO INSTALLATION OF THE INFILTRATION FACILITY OR PERVIOUS PAVEMENT (TO
REMOVE FINES ACCUMULATED DURING CONSTRUCTION).

29. ANY CATCH BASINS COLLECTING RUNOFF FROM THE SITE, WHETHER THEY ARE ON OR OFF THE SITE, SHALL HAVE ADEQUATE PROTECTION FROM SEDIMENT. CATCH BASINS DIRECTLY DOWNSTREAM OF THE CONSTRUCTION ENTRANCE OR ANY OTHER CATCH BASIN AS DETERMINED BY THE CITY INSPECTOR SHALL
BE PROTECTED WITH A "STORM DRAIN PROTECTION INSERT" OR EQUIVALENT.

30. IF A SEDIMENT POND IS NOT PROPOSED, A BAKER TANK OR OTHER TEMPORARY GROUND AND/OR SURFACE WATER STORAGE TANK MAY BE REQUIRED DURING CONSTRUCTION, DEPENDING ON WEATHER
CONDITIONS.

31. DO NOT FLUSH CONCRETE BY-PRODUCTS OR TRUCKS NEAR OR INTO THE STORM DRAINAGE SYSTEM. IF EXPOSED AGGREGATE IS FLUSHED INTO THE STORM SYSTEM, IT COULD MEAN RE-CLEANING THE ENTIRE DOWNSTREAM STORM SYSTEM, OR POSSIBLY RE-LAYING THE STORM LINE.

32. CONSTRUCTION DEWATERING DISCHARGES SHALL ALWAYS MEET WATER QUALITY GUIDELINES LISTED IN COK POLICY E-1. SPECIFICALLY, DISCHARGES TO THE PUBLIC STORMWATER DRAINAGE SYSTEM MUST BE BELOW 25NTU, AND NOT CONSIDERED A PROHIBITED DISCHARGE (PER KMC 15.52.090). TEMPORARY DISCHARGES TO SANITARY SEWER REQUIRE PRIOR AUTHORIZATION AND PERMIT FROM KING COUNTY INDUSTRIAL WASTE PROGRAM (206-263-3000) AND NOTIFICATION TO THE PUBLIC WORKS CONSTRUCTION INSPECTOR.

PROJECT SPECIFIC TESC NOTES:

1. THE TESC PLAN DRAWINGS SHOWN ARE CONCEPTUAL. THE CONTRACTOR SHALL BE REQUIRED TO SUBMIT DETAILED TESC PLANS, INCLUDING ANY RECOMMENDED ALTERNATIVE BEST MANAGEMENT PRACTICES (BMPS) FOR APPROVAL BY THE OWNER PRIOR TO CONSTRUCTION. THE CONTRACTOR'S TESC PLAN SHALL COMPLY WITH THE APPROVED CONSTRUCTION STORMWATER POLLUTION PREVENTION PLAN (SWPPP) AND THE SPECIFICATIONS.

2. THIS TESC PLAN SPECIFICALLY ADDRESSES WORK ABOVE THE ORDINARY HIGH WATER LINE. WORK TO BE UNDERTAKEN BELOW THE ORDINARY HIGH WATER LINE SHALL COMPLY WITH APPLICABLE PERMITS.

COK PW Dept
Approved Construction
Plans For LSM20-06180
Jamie Ward
4/2/2021

PERMIT SET

ONE INCH
AT FULL SIZE, IF NOT ONE INCH SCALE ACCORDINGLY

ANCHOR QEA

CITY OF KIRKLAND WASHINGTON

123 Fifth Ave
Kirkland, WA 98033
(425) 587-3300

DAVID W. RICE — STATE OF WASHINGTON — 50265 — REGISTERED PROFESSIONAL ENGINEER

REVISIONS				
REV	DATE	BY	APP'D	DESCRIPTION

DESIGNED BY: J. SEXTON
DRAWN BY: C. WEE/C. HEWETT
CHECKED BY: P. HUMMEL
APPROVED BY: P. HUMMEL
SCALE: AS SHOWN
DATE: JUNE 2020

DAVID E. BRINK PARK SHORELINE RENOVATION

TESC NOTES

T-3

SHEET NO 9 OF 37

Sep 01, 2020 3:15pm Coree K:\Projects\1006-City of Kirkland\David Brink Park Shoreline Renovation\Construction\Plans\133B5-FR_TESC Notes and Details.dwg T-3 TESCNOTES

DEMOLITION NOTES:

2. PROTECT EXISTING STEPS
3. REMOVE BENCHES (2) AND SALVAGE FOR RE-INSTALLATION IN SAME LOCATION FOLLOWING COMPLETION OF SHORELINE RENOVATION WORK
4. REMOVE PICNIC TABLE (####) AND SALVAGE FOR RE-INSTALL IN NEW LOCATION PER CM-1.2 FOLLOWING COMPLETION OF SHORELINE RENOVATION WORK
5. REMOVE IN-WATER DEBRIS (PILE AND PILE STUBS)
6. REMOVE RIPRAP AND QUARRY SPALL
7. REMOVE CONCRETE STAIRS/ STEPPED CONCRETE BULKHEAD
8. REMOVE EXISTING PIER LADDERS (2) AND PIER LIGHTINGS AND SALVAGE FOR RE-INSTALLATION AFTER PIER RENOVATION. REMOVE AND DISPOSE OF EXISTING CUSTOM BENCHES AT PIER TERMINUS
9. PROTECT EXISTING STEPS, TERRACING, BUILDING AND ASSOCIATED LANDSCAPING
10. REMOVE SIGN AND SALVAGE FOR RE-USE ON-SITE (NEW LOCATION AT DIRECTION OF OWNER)
11. REMOVE EXISTING ROCKERY AND SALVAGE OWNER-APPROVED ROCK FOR RE-USE
12. PROTECT EXISTING SIDEWALK OR PATHWAY-USE STEEL PLATES OR TIMBER MATS AT CROSSINGS

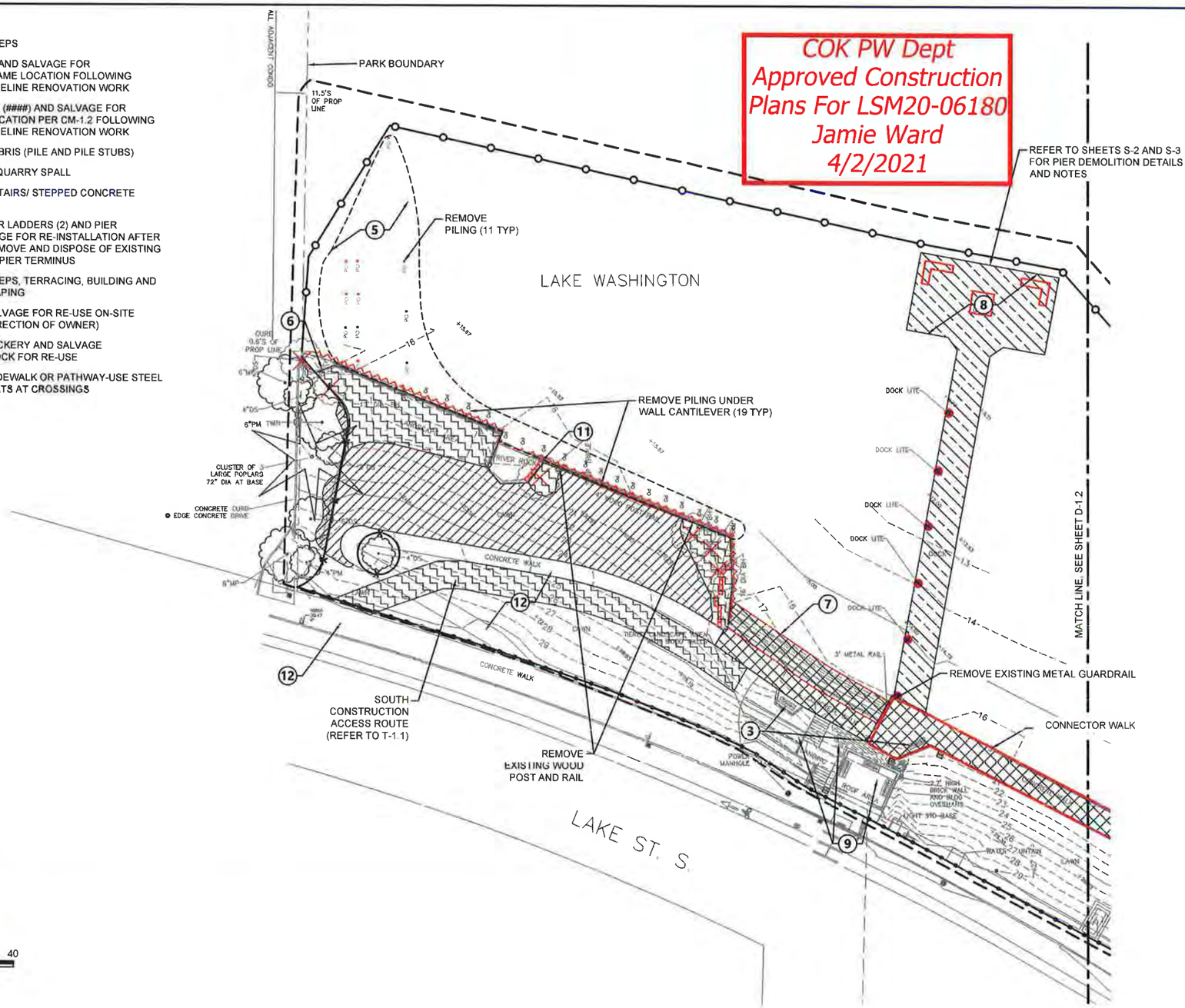

LEGEND:

- PARK BOUNDARY
- PROJECT LIMITS
- EXISTING CONTOUR
- EXISTING ORDINARY HIGH WATER MARK (OHWM)
- EXISTING ORDINARY LOW WATER MARK (OLWM)
- EXISTING ROCK BULKHEAD TO REMAIN
- PROTECT EXISTING TREES TO REMAIN
- TREE PROTECTION FENCING
- TEMPORARY CONSTRUCTION FENCING
- IN-WATER TURBIDITY CURTAIN
- REMOVE EXISTING TREE
- REMOVE EXISTING SITE FEATURE
- REMOVE AND SALVAGE EXISTING ROCKERY STONE
- REMOVE EXISTING CONCRETE PANEL BULKHEAD
- REMOVE SOLDIER PILE CONCRETE BULKHEAD
- REMOVE PIER DECKING
- REMOVE CONCRETE PAVING
- REMOVE 4' WOOD POST AND RAIL
- REMOVE 3' METAL GUARDRAIL
- REMOVE DOCK LIGHT AND SALVAGE FOR RE-INSTALLATION AFTER PIER RENOVATION
- STRIP SOD TO 4" DEPTH
- CLEAR AND GRUB
- SELECTIVELY CLEAR AND GRUB SHRUBS AND LAWN AREA - PROTECT EXISTING TREES
- IN-WATER DEBRIS REMOVAL AREA
- CONNECTOR WALK

0 20 40
SCALE IN FEET

NOTES:

1. HORIZONTAL DATUM: WASHINGTON STATE PLANE NORTH ZONE, NORTH AMERICAN DATUM OF 1983 (NAD83), U.S. SURVEY FEET
2. VERTICAL DATUM: NAVD 88
3. SURVEY PROVIDED BY STANTEC, INC IN MARCH 2019

ONE INCH
AT FULL SIZE, IF NOT ONE INCH SCALE ACCORDINGLY

PERMIT SET

ANCHOR QEA

CITY OF KIRKLAND WASHINGTON
123 Fifth Ave
Kirkland, WA 98033
(425) 587-3300

STATE OF WASHINGTON ANNA HOOK SPOONER NO. 2345 EXP. 06/ 19/ 2021 LICENSED LANDSCAPE ARCHITECT

REVISIONS

REV	DATE	BY	APP'D	DESCRIPTION

DESIGNED BY: A. SPOONER
DRAWN BY: C. WEE
CHECKED BY: P. HUMMEL
APPROVED BY: P. HUMMEL
SCALE: AS SHOWN
DATE: NOVEMBER 2019

DAVID E. BRINK PARK SHORELINE RENOVATION

CLEARING AND DEMOLITION PLAN - SOUTH

D-1.1

SHEET # 10 OF 37

K:\Projects\1006-City of Kirkland\David Brink Park Shoreline Renovation\Construction Plans\1006-PL-Demo Plan.dwg D-1.1 CLEARING AND DEMOLITION PLAN

Sep 01, 2020 3:15pm cwee

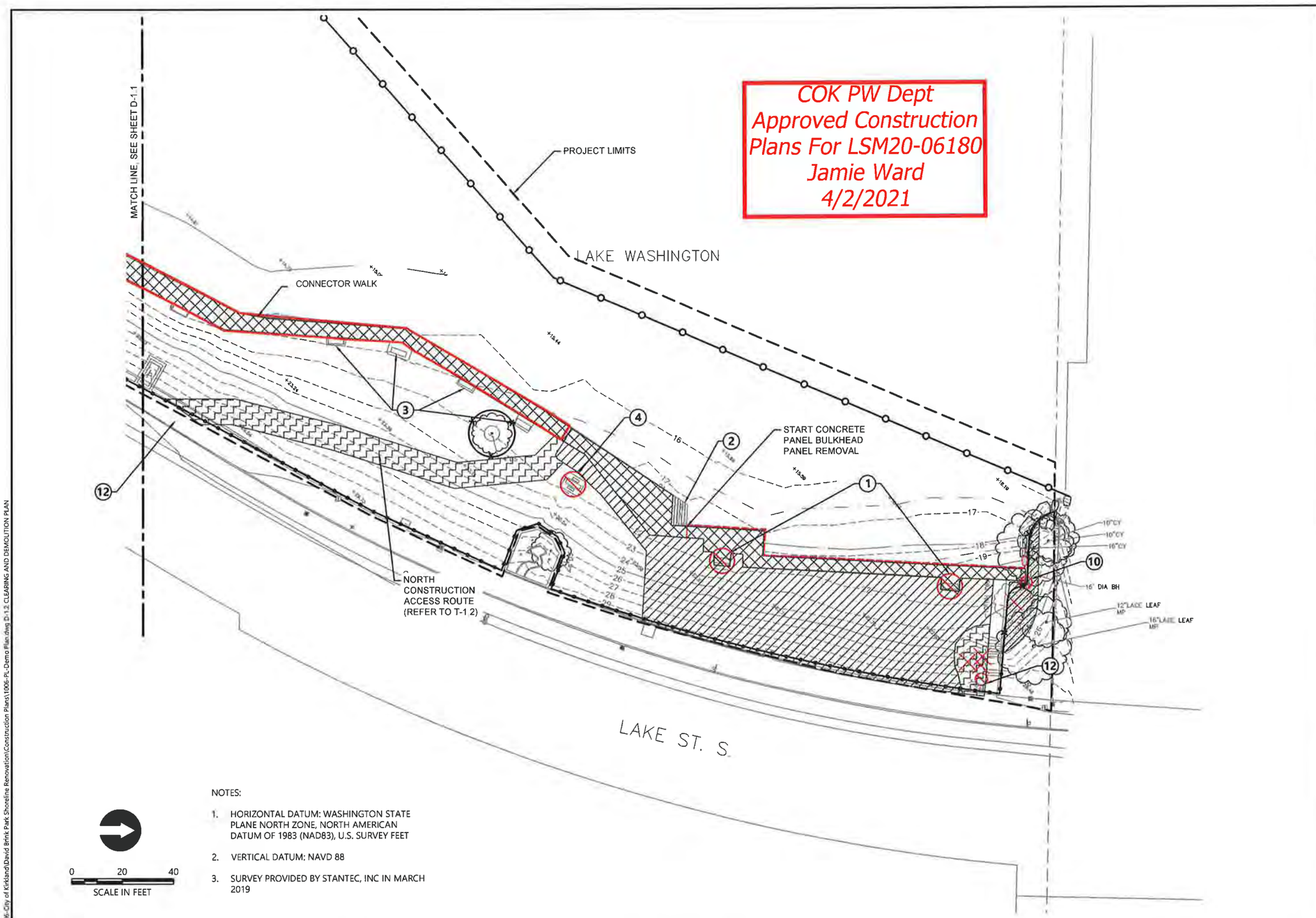

COK PW Dept
Approved Construction
Plans For LSM20-06180
Jamie Ward
4/2/2021

NOTES:

1. HORIZONTAL DATUM: WASHINGTON STATE PLANE NORTH ZONE, NORTH AMERICAN DATUM OF 1983 (NAD83), U.S. SURVEY FEET
2. VERTICAL DATUM: NAVD 88
3. SURVEY PROVIDED BY STANTEC, INC IN MARCH 2019

LEGEND:

- PARK BOUNDARY
- PROJECT LIMITS
- EXISTING CONTOUR
- EXISTING ORDINARY HIGH WATER MARK (OHWM)
- EXISTING ORDINARY LOW WATER MARK (OLWM)
- EXISTING ROCK BULKHEAD TO REMAIN
- PROTECT EXISTING TREES TO REMAIN
- TREE PROTECTION FENCING
- TEMPORARY CONSTRUCTION FENCING
- IN-WATER TURBIDITY CURTAIN
- REMOVE EXISTING TREE
- REMOVE EXISTING SITE FEATURE
- REMOVE AND SALVAGE EXISTING ROCKERY STONE
- REMOVE EXISTING CONCRETE PANEL BULKHEAD
- REMOVE SOLDIER PILE CONCRETE BULKHEAD
- REMOVE PIER DECKING
- REMOVE CONCRETE PAVING
- STRIP SOD TO 4" DEPTH
- CLEAR AND GRUB
- SELECTIVELY CLEAR AND GRUB SHRUBS - PROTECT EXISTING TREES
- CONNECTOR WALK

DEMOLITION NOTES:

1. REMOVE BENCHES (2) AND SALVAGE FOR DE-INSTALLATION IN SAME LOCATION FOLLOWING COMPLETION OF SHORELINE RENOVATION WORK
2. PROTECT EXISTING STEPS
3. RETAIN EXISTING SITE FURNISHINGS
4. SALVAGE PICNIC TABLE FOR ON-SITE RELOCATION
5. REMOVE IN-WATER DEBRIS (PILE STUBS AND RIPRAP)
6. REMOVE RIPRAP AND QUARRY SPALL
7. REMOVE CONCRETE STAIRS/ STEPPED CONCRETE BULKHEAD
8. REMOVE EXISTING PIER LADDERS (2) AND CUSTOM BENCH SEATING AND SALVAGE FOR RE-INSTALLATION AFTER PIER RENOVATION
9. PROTECT EXISTING STEPS, TERRACING, BUILDING AND ASSOCIATED LANDSCAPING
10. REMOVE SIGN AND SALVAGE FOR RE-USE ON-SITE (NEW LOCATION AT DIRECTION OF OWNER)
11. REMOVE EXISTING ROCKERY AND SALVAGE OWNER-APPROVED ROCK FOR RE-USE
12. REMOVE AND SALVAGE WASTE BAG DISPENSER

ONE INCH
AT FULL SIZE, IF NOT ONE INCH, SCALE ACCORDINGLY

PERMIT SET

ANCHOR QEA

CITY OF KIRKLAND WASHINGTON
123 Fifth Ave
Kirkland, WA 98033
(425) 587-3300

STATE OF WASHINGTON
ANNA HOOK SPOONER
NO. 2245 EXP. 09/30/20
LICENSED LANDSCAPE ARCHITECT

REVISIONS

REV	DATE	BY	APP'D	DESCRIPTION

DESIGNED BY: A. SPOONER
DRAWN BY: C. WEE
CHECKED BY: P. HUMMEL
APPROVED BY: P. HUMMEL
SCALE: AS SHOWN
DATE: NOVEMBER 2019

DAVID E. BRINK PARK SHORELINE RENOVATION

CLEARING AND DEMOLITION PLAN - NORTH

D-1.2

SHEET # 11 OF 37

K:\Projects\1006-City of Kirkland\David Brink Park Shoreline Renovation\Construction Plans\1006-PL-Demo Plan.dwg D-1.2 CLEARING AND DEMOLITION PLAN
Sep 01, 2020 3:16pm cwee

CONTROL POINT TABLE			
POINT #	DESCRIPTION	NORTHING	EASTING
		PLACEHOLDER -	
		TO BE ADDED AT 100% DESIGN	

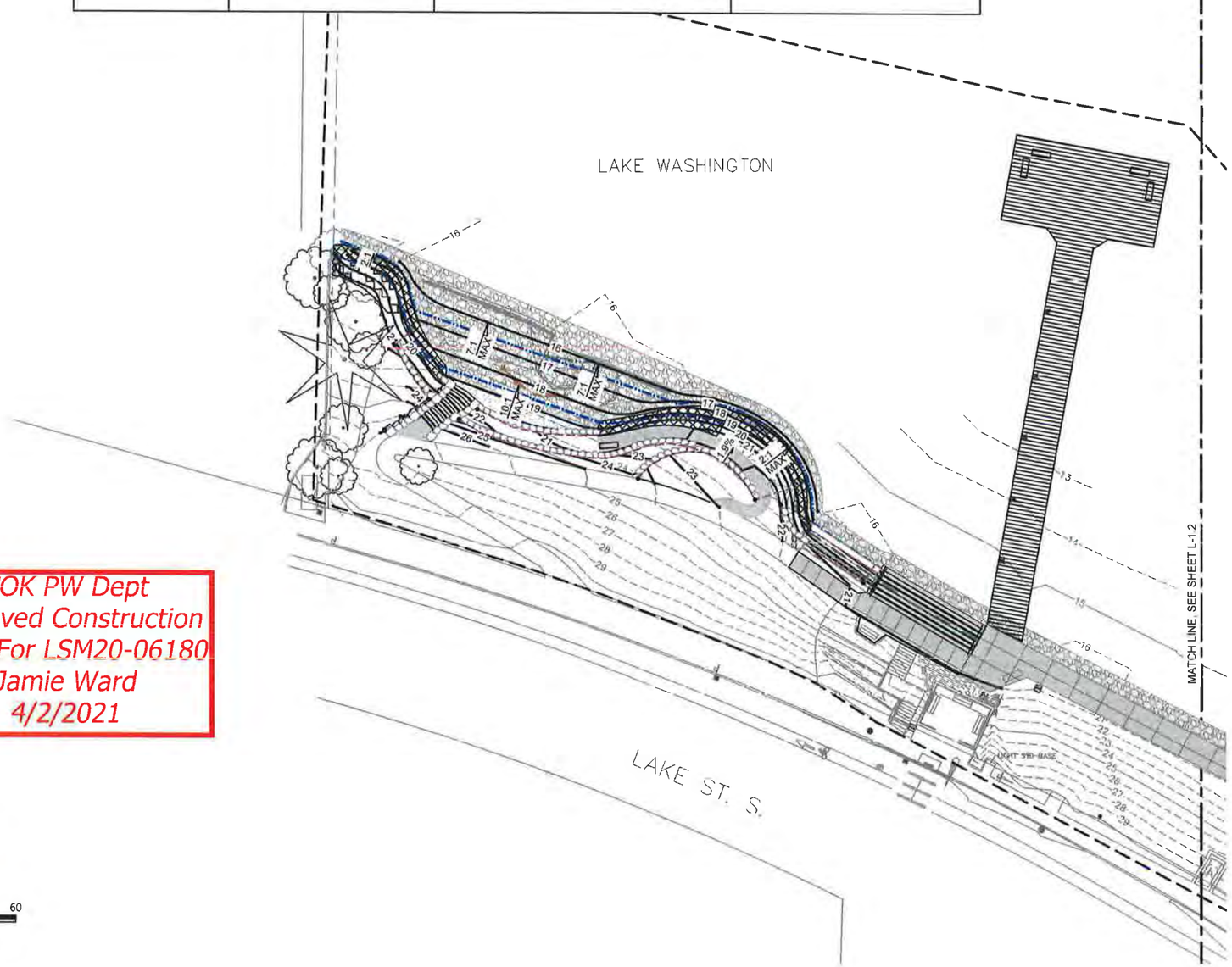

COK PW Dept
Approved Construction
Plans For LSM20-06180
Jamie Ward
4/2/2021

0 30 60
SCALE IN FEET

LEGEND:

- PARK BOUNDARY
- PROJECT LIMITS
- EXISTING CONTOUR
- EXISTING ORDINARY HIGH WATER MARK (OHWM)
- EXISTING ORDINARY LOW WATER MARK (OLWM)
- EXISTING ROCK BULKHEAD TO REMAIN
- PROTECT EXISTING TREES TO REMAIN
- TREE PROTECTION FENCING

NOTES:

1. HORIZONTAL DATUM: WASHINGTON STATE PLANE NORTH ZONE, NORTH AMERICAN DATUM OF 1983 (NAD83), U.S. SURVEY FEET
2. VERTICAL DATUM: NAVD 88
3. SURVEY PROVIDED BY STANTEC, INC IN MARCH 2019
4. CONTRACTOR SHALL BE PROVIDED WITH CAD FILES DURING CONSTRUCTION TO ASSIST WITH DESIGN LAYOUT

ONE INCH
AT FULL SIZE, IF NOT ONE INCH SCALE ACCORDINGLY

PERMIT SET

ANCHOR QEA

CITY OF KIRKLAND WASHINGTON
123 Fifth Ave
Kirkland, WA 98033
(425) 587-3300

STATE OF WASHINGTON
ANNA HOOK SPONGER
NO. 1245 EXP. 06/30/2021
LICENSED LANDSCAPE ARCHITECT

REVISIONS				
REV	DATE	BY	APP'D	DESCRIPTION

DESIGNED BY: J. LASTNAME
DRAWN BY: C. WEE/C. HEWETT
CHECKED BY: P. HUMMEL
APPROVED BY: P. HUMMEL
SCALE: AS SHOWN
DATE: JUNE 2020

DAVID E. BRINK PARK SHORELINE RENOVATION

LAYOUT PLAN AND CONTROL POINTS - SOUTH

CV-1.1

SHEET # 12 OF 37

K:\Projects\1006-City of Kirkland\David Brink Park Shoreline Renovation\Construction Plans\1006-PL-Layout and Control Points Plan.dwg CV-1.1 LAYOUT PLAN AND CONTROL POINTS - SOUTH
Sep 01, 2020 3::6pm cwee

CONTROL POINT TABLE			
POINT #	DESCRIPTION	NORTHING	EASTING
		PLACEHOLDER -	
		TO BE ADDED AT 100% DESIGN	

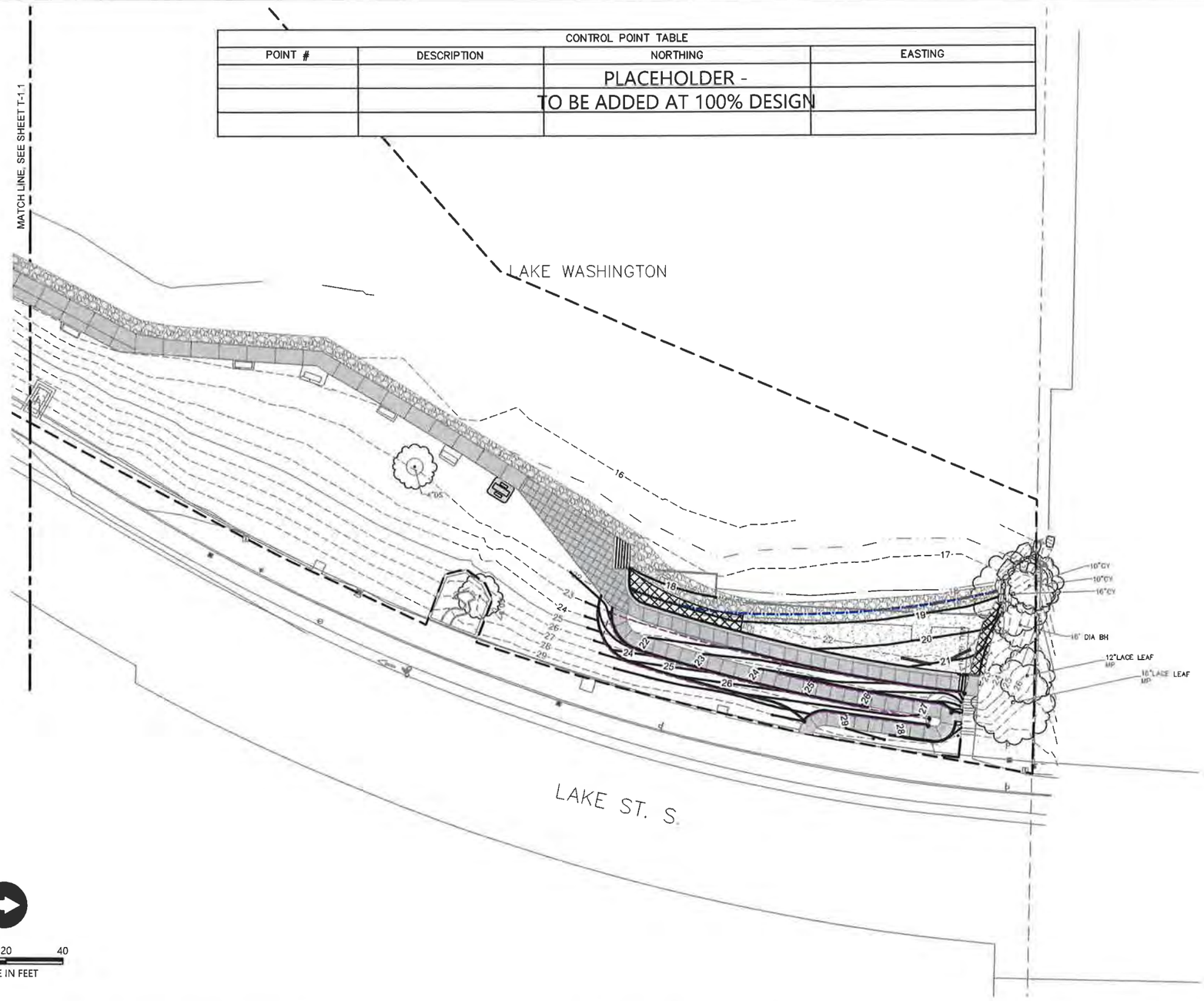

0 20 40
SCALE IN FEET

LEGEND:

- PROJECT LIMITS
- PROPERTY BOUNDARY
- CLEARING, GRADING, AND DISTURBANCE LIMITS
- EXISTING OHWM
- EXISTING OLWM
- EXISTING MAJOR CONTOUR
- EXISTING MINOR CONTOUR
- EXISTING TREE
- EXISTING STORM SEWER
- EXISTING ROCK BULKHEAD

COK PW Dept
Approved Construction
Plans For LSM20-06180
Jamie Ward
4/2/2021

NOTES:

1. HORIZONTAL DATUM: WASHINGTON STATE PLANE NORTH ZONE, NORTH AMERICAN DATUM OF 1983 (NAD83), U.S. SURVEY FEET
2. VERTICAL DATUM: NAVD 88
3. SURVEY PROVIDED BY STANTEC, INC IN MARCH 2019
4. CONTRACTOR SHALL BE PROVIDED WITH CAD FILES DURING CONSTRUCTION TO ASSIST WITH DESIGN LAYOUT

ONE INCH
AT FULL SIZE, IF NOT ONE INCH SCALE ACCORDINGLY

PERMIT SET

ANCHOR QEA

CITY OF KIRKLAND WASHINGTON
123 Fifth Ave
Kirkland, WA 98033
(425) 587-3300

STATE OF WASHINGTON
ANNA HOOK SPONNER
NO. 1245 EXP. 06/10/2021
LICENSED LANDSCAPE ARCHITECT

REVISIONS				
REV	DATE	BY	APP'D	DESCRIPTION

DESIGNED BY: I. LASTNAME
DRAWN BY: C. WEE/C. HEWETT
CHECKED BY: P. HUMMEL
APPROVED BY: P. HUMMEL
SCALE: AS SHOWN
DATE: JUNE 2020

DAVID E. BRINK PARK SHORELINE RENOVATION

LAYOUT PLAN AND CONTROL PONITS - NORTH

CV-1.2

SHEET # 13 OF 37

K:\Projects\1006 City of Kirkland\David Brink Park Shoreline Renovation\Construction Plans\1006-PL-Layout and Control Points Plan.dwg CV-1.2 LAYOUT PLAN AND CONTROL PONITS - NORTH
Sep 01, 2020 3:16pm cwee

COK PW Dept
Approved Construction
Plans For LSM20-06180
Jamie Ward
4/2/2021

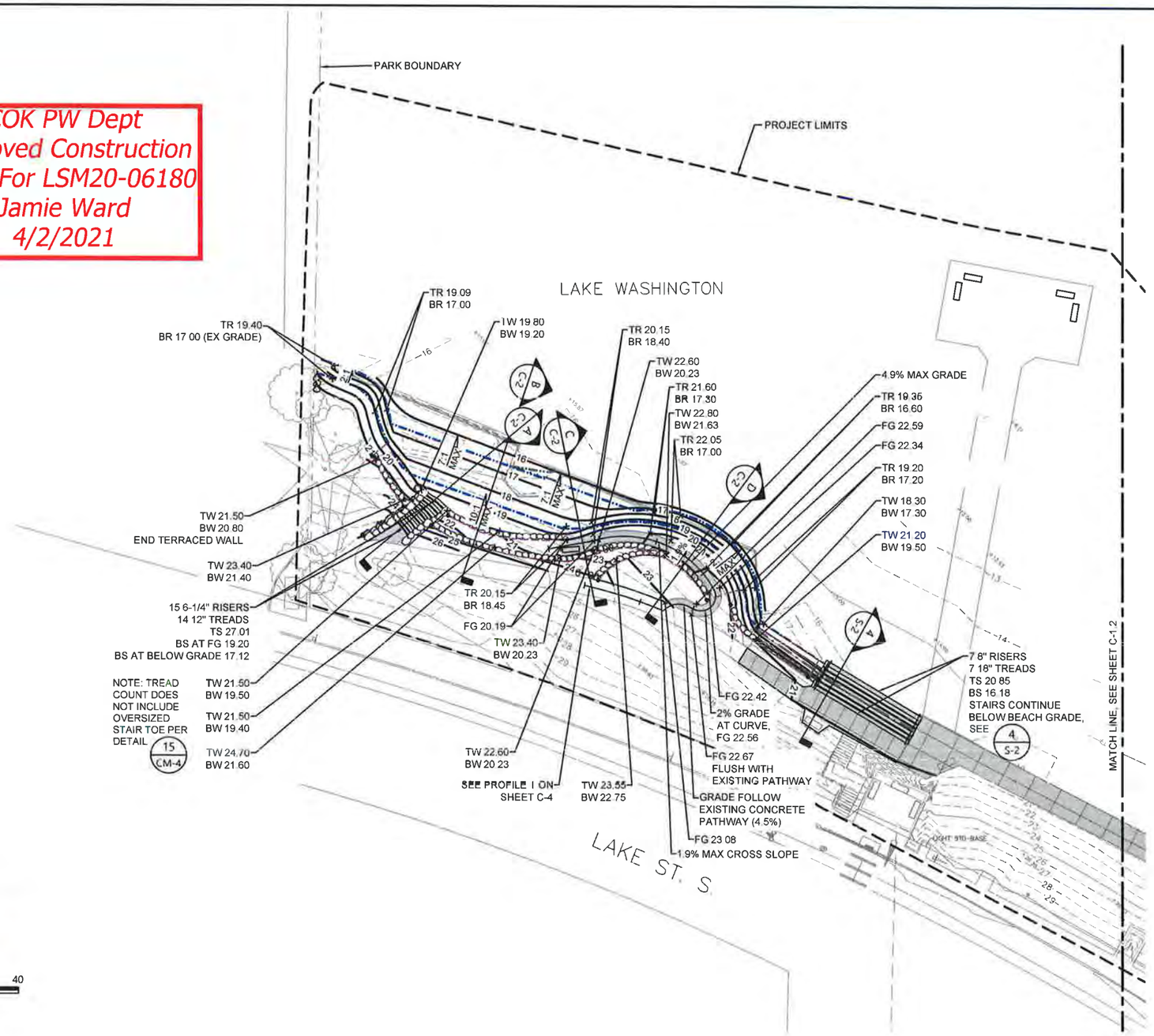

LEGEND:

- PARK BOUNDARY
- PROJECT LIMITS
- EXISTING CONTOUR
- EXISTING ORDINARY HIGH WATER MARK 18.67' NAVD88 (OHWM)
- EXISTING ORDINARY LOW WATER MARK 16.67' NAVD88 (OLWM)
- EXISTING TREE
- PROPOSED CONTOUR
- PROPOSED OHWM
- PROPOSED OLWM
- PROPOSED CONCRETE PATHWAY
- BASALT ROCKERY AT SHORELINE
- BASALT ROCK TERRACE (MAX 29" EXPOSED HEIGHT)
- PROPOSED BENCH
- EXISTING BENCH TO REMAIN
- SECTION LOCATION
- PROFILE LOCATION
- TW TOP OF WALL
- BW BOTTOM OF WALL
- TR TOP OF ROCK REVETMENT
- BR BOTTOM OF ROCK REVETMENT
- FG FINISH GRADE
- WALL DRAIN

NOTES:

1. HORIZONTAL DATUM: WASHINGTON STATE PLANE NORTH ZONE, NORTH AMERICAN DATUM OF 1983 (NAD83), U.S. SURVEY FEET
2. VERTICAL DATUM: NAVD 88
3. SURVEY PROVIDED BY STANTEC, INC IN MARCH 2019
4. BR AND BW ELEVATIONS INDICATE ELEVATION AT FINISH GRADE AND DO NOT INCLUDE EMBEDMENT DEPTH

ONE INCH
AT FULL SIZE, IF NOT ONE INCH SCALE ACCORDINGLY

PERMIT SET

ANCHOR QEA

CITY OF KIRKLAND WASHINGTON
123 Fifth Ave
Kirkland, WA 98033
(425) 587-3300

DAVID W. RICE — STATE OF WASHINGTON — 40265 — REGISTERED PROFESSIONAL ENGINEER

REVISIONS				
REV	DATE	BY	APP'D	DESCRIPTION

DESIGNED BY: A. SPOONER
DRAWN BY: C. WEE/C. HEWETT
CHECKED BY: P. HUMMEL
APPROVED BY: P. HUMMEL
SCALE: AS SHOWN
DATE: JUNE 2020

DAVID E. BRINK PARK SHORELINE RENOVATION

GRADING PLAN - SOUTH

C-1.1

SHEET # 14 OF 37

K:\Projects\1006-City of Kirkland\David Brink Park Shoreline Renovation\Construction Plans\1006-PL-Grading Plan.dwg C-1.1 GRADING PLAN
Sep 01, 2020 3:16pm owee

COK PW Dept
Approved Construction
Plans For LSM20-06180
Jamie Ward
4/2/2021

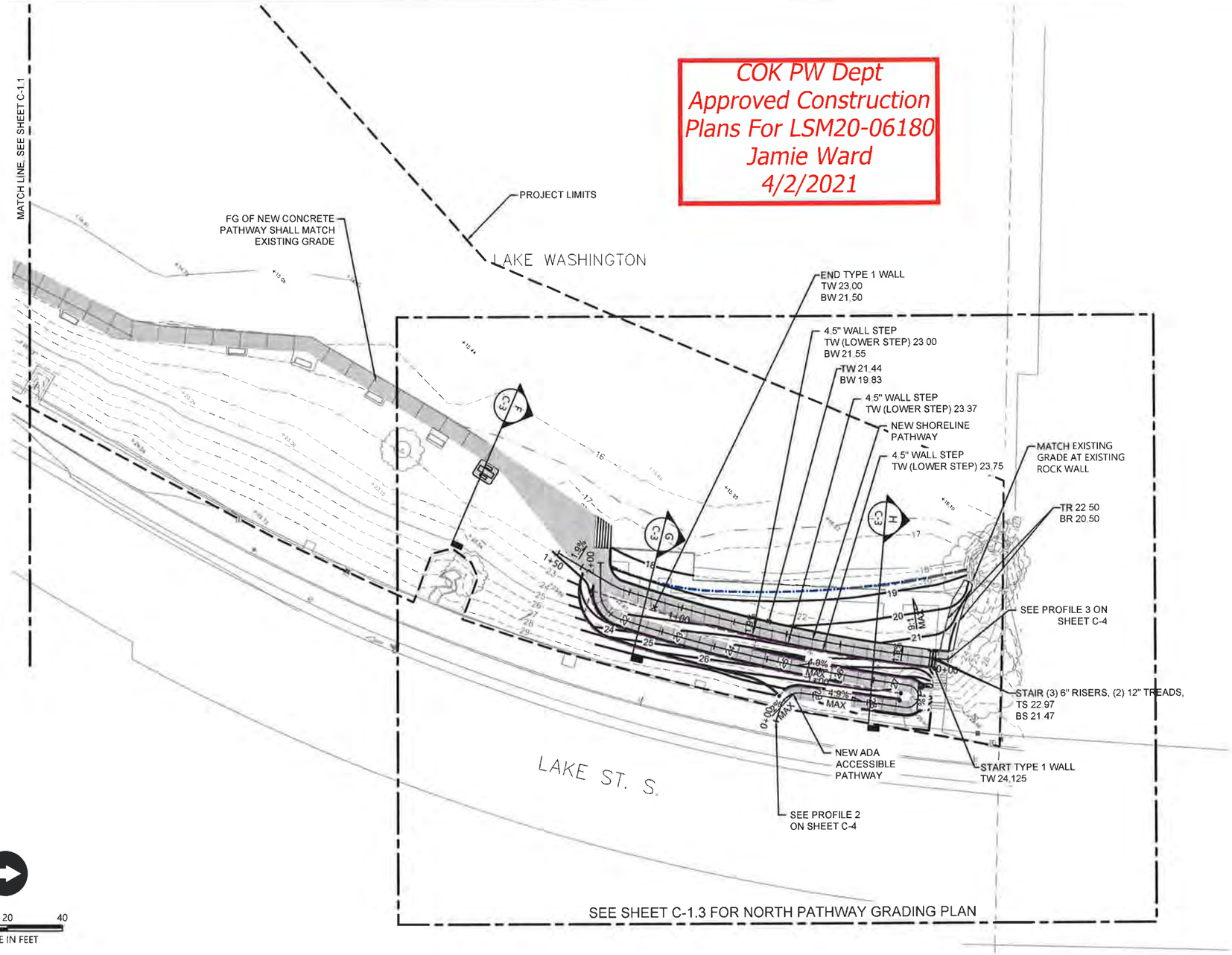

LEGEND:

- PARK BOUNDARY
- PROJECT LIMITS
- EXISTING CONTOUR
- EXISTING ORDINARY HIGH WATER MARK 18.67' NAVD88 (OHWM)
- EXISTING ORDINARY LOW WATER MARK 16.67' NAVD88 (OLWM)
- EXISTING TREE
- PROPOSED CONTOUR
- PROPOSED OHWM
- PROPOSED OLWM
- PROPOSED CONCRETE PATHWAY
- EXISTING BENCH TO REMAIN
- SECTION LOCATION
- PROFILE LOCATION
- TW TOP OF WALL
- BW BOTTOM OF WALL
- TR TOP OF ROCK REVETMENT
- BR BOTTOM OF ROCK REVETMENT
- FG FINISH GRADE
- TS TOP OF STAIRS
- BS BOTTOM OF STAIRS
- WALL DRAIN

NOTES:

1. HORIZONTAL DATUM: WASHINGTON STATE PLANE NORTH ZONE, NORTH AMERICAN DATUM OF 1983 (NAD83), U.S. SURVEY FEET
2. VERTICAL DATUM: NAVD 88
3. SURVEY PROVIDED BY STANTEC, INC IN MARCH 2019
4. BW ELEVATIONS ARE TO FINISH GRADE

ONE INCH
AT FULL SIZE, IF NOT ONE INCH SCALE ACCORDINGLY

PERMIT SET

ANCHOR QEA

CITY OF KIRKLAND WASHINGTON

123 Fifth Ave
Kirkland, WA 98033
(425) 587-3300

DAVID W. RICE — STATE OF WASHINGTON — 30265 — REGISTERED PROFESSIONAL ENGINEER

REVISIONS

REV	DATE	BY	APP'D	DESCRIPTION

DESIGNED BY: A SPOONER
DRAWN BY: C WEE/C HEWETT
CHECKED BY: P HUMMEL
APPROVED BY: P HUMMEL
SCALE: AS SHOWN
DATE: JUNE 2020

DAVID E. BRINK PARK SHORELINE RENOVATION

GRADING PLAN - NORTH

C-1.2

SHEET # 15 OF 37

Sep 01, 2020 3:16pm owee K:\Projects\1006-City of Kirkland\David Brink Park Shoreline Renovation\Construction Plans\1006-PL-Grading Plan.dwg C-1.2 GRADING PLAN

COK PW Dept
Approved Construction
Plans For LSM20-06180
Jamie Ward
4/2/2021

FG 21.62
FG 21.60
FG 21.78
END CONCRETE MOWSTRIP FLUSH WITH GRADE
END TYPE 2 WALL
6" WALL STEP TW 23.00 (LOWER STEP)
START CONCRETE MOWSTRIP FLUSH WITH GRADE
END TYPE 3 WALL TW 25.60 BW 23.65
FG 21.88
6" WALL STEP TW 23.50 (LOWER STEP)
6" WALL STEP TW 24.00 (LOWER STEP)
6" WALL STEP TW 24.50 (LOWER STEP)
6" WALL STEP TW 25.00 (LOWER STEP)
6" WALL STEP TW 25.50 (LOWER STEP)
START TYPE 3 WALL BW 26.75 TW 27.75
START CONCRETE MOWSTRIP FLUSH WITH GRADE
6" WALL STEP TW 26.00 (LOWER STEP)
END CONCRETE MOWSTRIP (FLUSH WITH GRADE) START TYPE 2 WALL TW 3" ABOVE PATHWAY FG BW (PATH) 29.41 TW 29.66 BW 28.85
FG 21.61
TR 20.50 BR 18.50
TR 20.50 BR 18.67
END TYPE 2 WALL BW (PATH) 24.37 TW 24.62 BW 24.37
TW 21.41 BW 21.00
BW (PATH) 26.38 TW 26.64 BW (SLOPE) 25.36
FG 27.27
STAIR (3) 6"R, (2) 12"T TS 22.97BS 21.47
SEE PROFILE 3 ON SHEET C-4
EG 23.04 (FG MATCH)
START TYPE 2 WALL BW (PATH) 27.30 TW 27.55 BW (SLOPE) 27.00
TW 28.00 BW (SLOPE) 27.00
EG 27.49
BW 27.50 TW 28.50
END TYPE 3 WALL TW 28.75
FG 29.33
FG 27.40
END TYPE 3 WALL BW (PATH) 27.50 TW 27.75 BW 27.50
FG 29.54
BW (PATH) 26.12 START WALL TYPE 2 TW 26.50
SEE PROFILE 2 ON SHEET C-4
END TYPE 2 WALL, START TYPE 3 WALL BW (PATH) 28.21 TW 28.46 BW (SLOPE) 27.55
BW (PATH) 29.28 TW 29.53 BW (SLOPE) 27.50
START TYPE 3 WALL TW 28.75
1.9%
4.9% MAX
1.2% MAX
0+00
1+00
1+50
2+00
LAKE S

0 10 20
SCALE IN FEET

LEGEND:

- PARK BOUNDARY
- PROJECT LIMITS
- EXISTING CONTOUR
- EXISTING ORDINARY HIGH WATER MARK 18.67' NAVD88 (OHWM)
- EXISTING ORDINARY LOW WATER MARK 16.67' NAVD88 (OLWM)
- EXISTING TREE
- PROPOSED CONTOUR
- PROPOSED OHWM
- PROPOSED OLWM
- PROPOSED CONCRETE PATHWAY
- EXISTING BENCH TO REMAIN
- SECTION LOCATION
- PROFILE LOCATION
- TW TOP OF WALL
- BW BOTTOM OF WALL
- TR TOP OF ROCK
- BR BOTTOM OF ROCK
- EG EXISTING GRADE
- FG FINISH GRADE
- TS TOP OF STAIRS
- BS BOTTOM OF STAIRS
- WALL DRAIN

NOTES:

1. HORIZONTAL DATUM: WASHINGTON STATE PLANE NORTH ZONE, NORTH AMERICAN DATUM OF 1983 (NAD83), U.S. SURVEY FEET
2. VERTICAL DATUM: NAVD 88
3. SURVEY PROVIDED BY STANTEC, INC IN MARCH 2019
4. BW ELEVATIONS ARE TO FINISH GRADE

ONE INCH
AT FULL SIZE, IF NOT ONE INCH SCALE ACCORDINGLY

PERMIT SET

ANCHOR QEA

CITY OF KIRKLAND WASHINGTON
123 Fifth Ave
Kirkland, WA 98033
(425) 587-3300

DAVID W. RICE, STATE OF WASHINGTON, 40265, REGISTERED PROFESSIONAL ENGINEER

REVISIONS				
REV	DATE	BY	APP'D	DESCRIPTION

DESIGNED BY: J. LASTNAME
DRAWN BY: C. WEE/C. HEWETT
CHECKED BY: P. HUMMEL
APPROVED BY: P. HUMMEL
SCALE: AS SHOWN
DATE: JUNE 2020

DAVID E. BRINK PARK SHORELINE RENOVATION

NORTH SHORELINE PATHWAY GRADING PLAN

C-1.3

SHEET # 16 OF 37

Sep 01, 2020 3:46pm cwee K:\Projects\1006-City of Kirkland\David Brink Park Shoreline Renovation\Construction Plans\1006-PL-Grading Plan.dwg C-1.3 GRADING PLAN

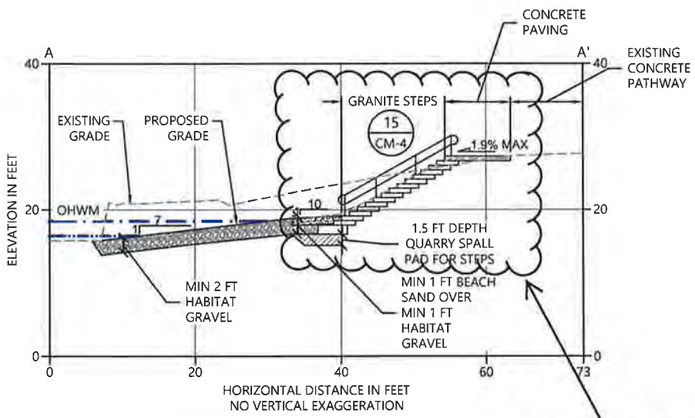

A C-1.1 SECTION A
SCALE: 1" = 10'

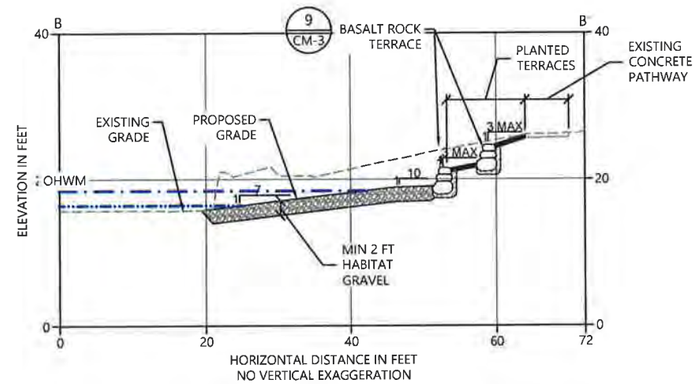

B C-1.1 SECTION B
SCALE: 1" = 10'

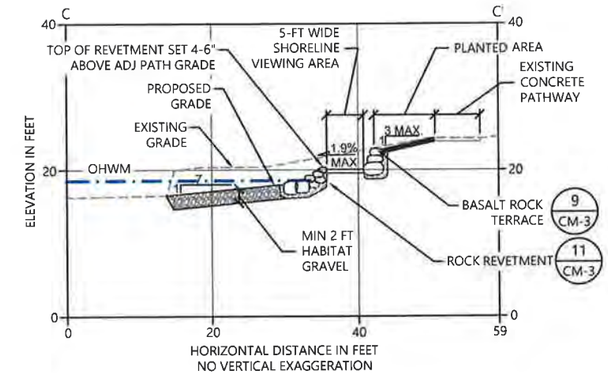

C C-1.1 SECTION C
SCALE: 1" = 10'

permitted separately under BNR20-06182

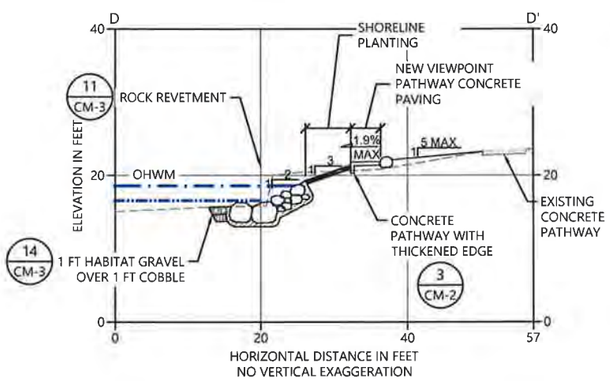

D C-1.1 SECTION D
SCALE: 1" = 10'

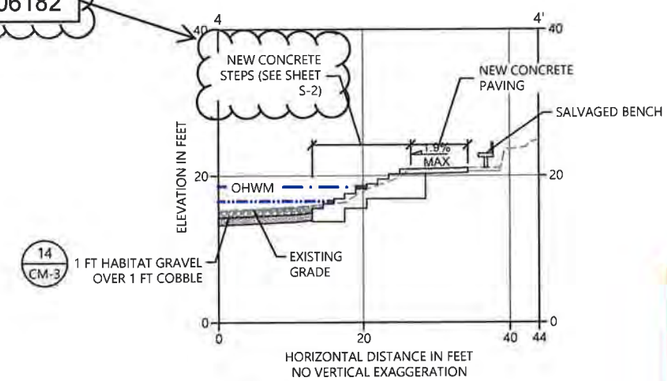

E C-1.1 SECTION E
SCALE: 1" = 10'

COK PW Dept
Approved Construction
Plans For LSM20-06180
Jamie Ward
4/2/2021

LEGEND:
- EXISTING GRADE
- PROPOSED GRADE
- OHWM 18.67 NAVD88
- OLWM 16.67 NAVD88
- HABITAT GRAVEL
- COBBLE
- BEACH SAND
- FILTER LAYER

0 10 20
SCALE IN FEET

NOTES:

1. HORIZONTAL DATUM: WASHINGTON STATE PLANE NORTH ZONE, NORTH AMERICAN DATUM OF 1983 (NAD83), U.S. SURVEY FEET
2. VERTICAL DATUM: NAVD 88
3. SURVEY PROVIDED BY STANTEC, INC IN MARCH 2019

ONE INCH
AT FULL SIZE, IF NOT ONE INCH SCALE ACCORDINGLY

PERMIT SET

ANCHOR QEA

CITY OF KIRKLAND WASHINGTON
123 Fifth Ave
Kirkland, WA 98033
(425) 587-3300

DAVID W. RICE STATE OF WASHINGTON 40265 REGISTERED PROFESSIONAL ENGINEER

REVISIONS				
REV	DATE	BY	APP'D	DESCRIPTION

DESIGNED BY: A. SPOONER
DRAWN BY: C. WEE/C. HEWETT
CHECKED BY: P. HUMMEL
APPROVED BY: P. HUMMEL
SCALE: AS SHOWN
DATE: JUNE 2020

DAVID E. BRINK PARK SHORELINE RENOVATION

GRADING AND MATERIALS SECTIONS (1 OF 2)

C-2

SHEET # 17 OF 37

K:\Projects\1006-City of Kirkland\David Brink Park Shoreline Renovation\Construction Plans\1006-PL-Grading Plan.dwg C-2 GRADING AND MATERIALS SECTIONS
Sep 01, 2020 3:16pm ovee

LEGEND:

- EXISTING GRADE
- PROPOSED GRADE
- OHWM 18 67 NAVD88
- OLWM 16 67 NAVD88
- HABITAT GRAVEL
- COBBLE
- BEACH SAND
- FILTER LAYER
- TOPSOIL

0 10 20
SCALE IN FEET

permitted separately under BNR20-06182

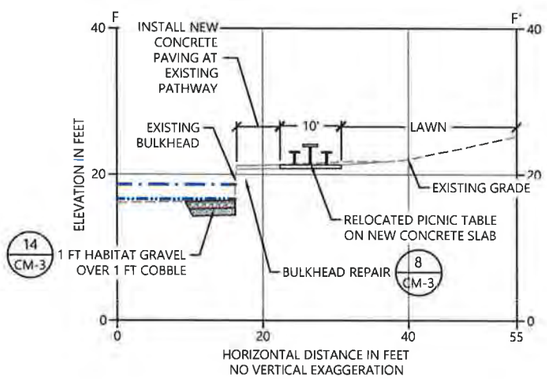

F C-1.2 SECTION F
SCALE: 1" = 10'

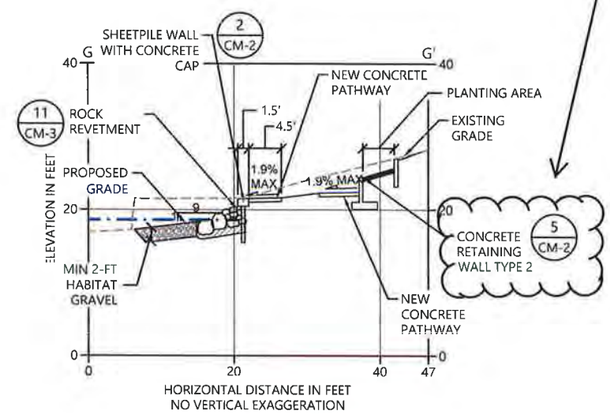

G C-1.2 SECTION G
SCALE: 1" = 10'

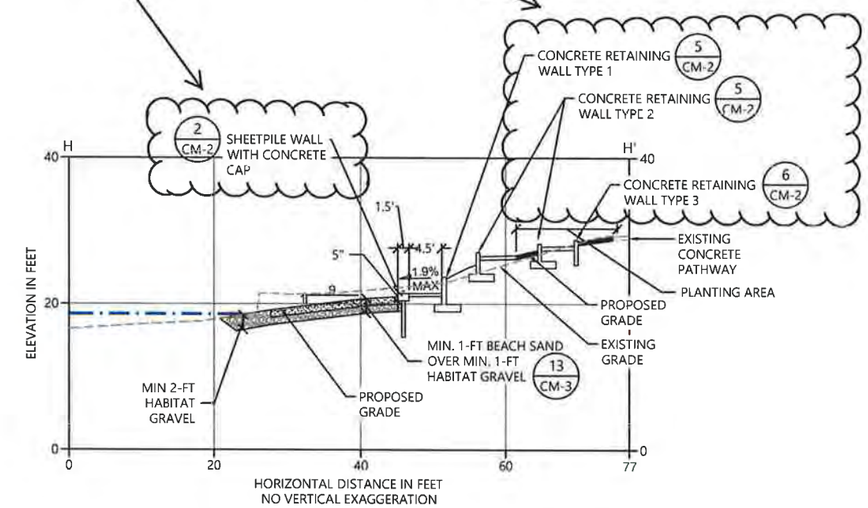

H C-1.2 SECTION H
SCALE: 1" = 10'

COK PW Dept
Approved Construction
Plans For LSM20-06180
Jamie Ward
4/2/2021

NOTES:

1. HORIZONTAL DATUM: WASHINGTON STATE PLANE NORTH ZONE, NORTH AMERICAN DATUM OF 1983 (NAD83), U.S. SURVEY FEET
2. VERTICAL DATUM: NAVD 88
3. SURVEY PROVIDED BY STANTEC, INC IN MARCH 2019

ONE INCH
AT FULL SIZE, IF NOT ONE INCH SCALE ACCORDINGLY

PERMIT SET

ANCHOR QEA

CITY OF KIRKLAND WASHINGTON
123 Fifth Ave
Kirkland, WA 98033
(425) 587-3300

DAVID W. RICE STATE OF WASHINGTON 46265 REGISTERED PROFESSIONAL ENGINEER

REVISIONS

REV	DATE	BY	APP'D	DESCRIPTION

DESIGNED BY: A SPOONER
DRAWN BY: C WEE/C HEWETT
CHECKED BY: P HUMMEL
APPROVED BY: P HUMMEL
SCALE: AS SHOWN
DATE: JUNE 2020

DAVID E. BRINK PARK SHORELINE RENOVATION

GRADING AND MATERIALS SECTIONS (2 OF 2)

C-3

SHEET # 18 OF 37

K:\Projects\1006 City of Kirkland\David Brink Park Shoreline Renovation\Construction Plans\1006 PL Grading Plan.dwg C-3 GRADING AND MATERIALS SECTIONS
Sep 01, 2020 3:16pm owen

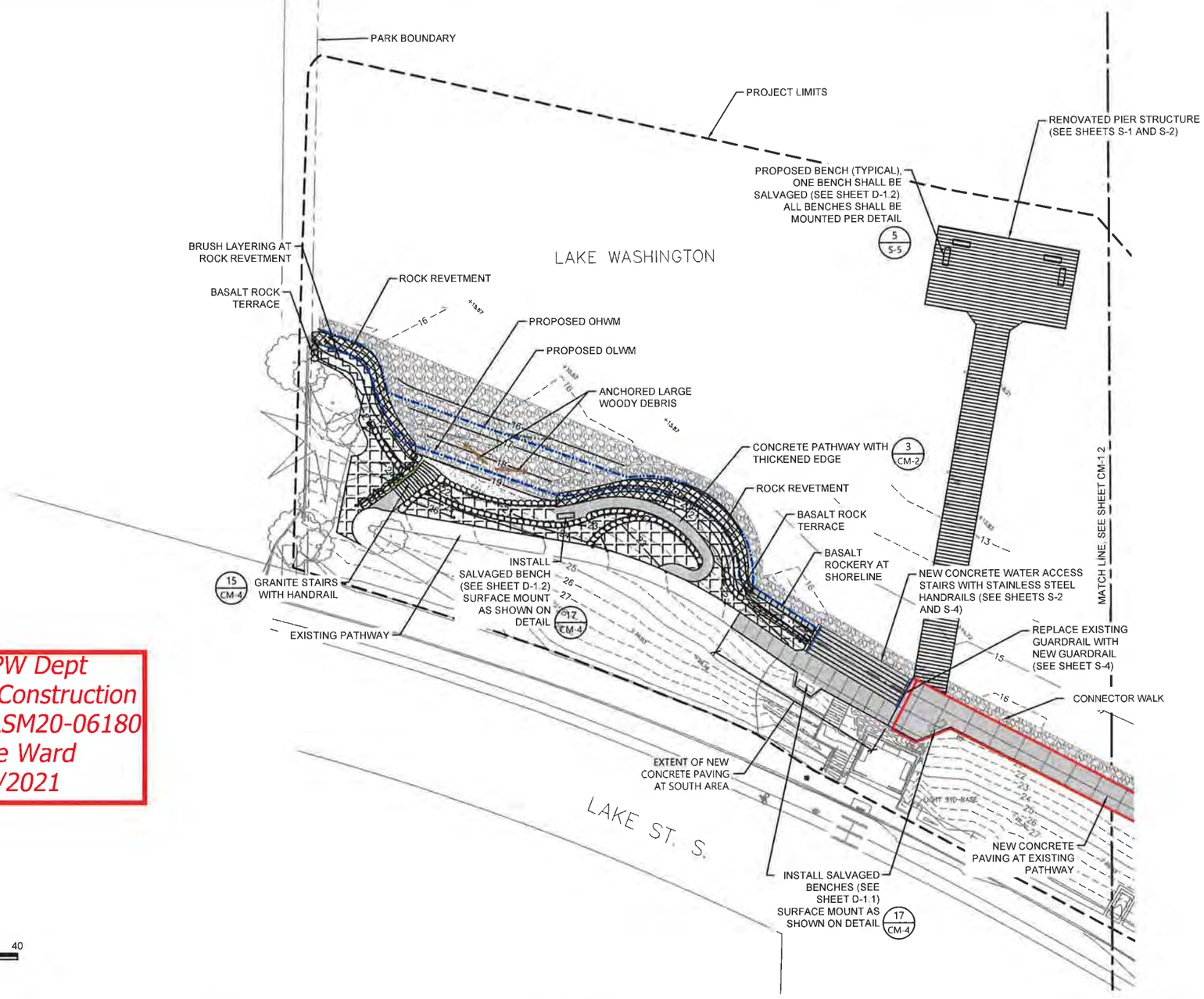

COK PW Dept
Approved Construction
Plans For LSM20-06180
Jamie Ward
4/2/2021

LEGEND:

- PARK BOUNDARY
- PROJECT LIMITS
- EXISTING CONTOUR
- EXISTING ORDINARY HIGH WATER MARK (OHWM)
- EXISTING ORDINARY LOW WATER MARK (OLWM)
- EXISTING TREE
- PROPOSED CONTOUR
- PROPOSED OHWM
- PROPOSED OLWM
- PROPOSED STANDARD CONCRETE PAVING 1/CM-2
- PIER GRATING
- BEACH SAND 13/CM-3
- HABITAT GRAVEL 14/CM-3
- COBBLE 14/CM-3
- BASALT ROCKERY AT SHORELINE (29" MAX. EXPOSED HEIGHT) 10/CM-3
- BASALT ROCK TERRACE 9/CM-3
- ROCK REVETMENT (2:1 MAX. SLOPE) 11/CM-3
- BRUSH LAYERING AT ROCK REVETMENT 12/CM-3
- PROPOSED BENCH 17/CM-4
- EXISTING BENCH TO RE-INSTALL
- ANCHORED LARGE WOODY DEBRIS 20/CM-4
- TOPSOIL (6" DEPTH)
- GRANITE STAIR HANDRAIL 16/CM-4
- GUARDRAIL 2/S-4
- STAINLESS STEEL HANDRAIL (SEE S-4)
- CONNECTOR WALK

NOTES:

1. HORIZONTAL DATUM: WASHINGTON STATE PLANE NORTH ZONE, NORTH AMERICAN DATUM OF 1983 (NAD83), U.S. SURVEY FEET
2. VERTICAL DATUM: NAVD 88
3. SURVEY PROVIDED BY STANTEC, INC IN MARCH 2019

ONE INCH
AT FULL SIZE, IF NOT ONE INCH SCALE ACCORDINGLY

PERMIT SET

ANCHOR QEA

CITY OF KIRKLAND WASHINGTON
123 Fifth Ave
Kirkland, WA 98033
(425) 587-3300

STATE OF WASHINGTON
ANNA HOOK SPOONER
NO. 2445 EXP. 06/10/2021
LICENSED LANDSCAPE ARCHITECT

REVISIONS				
REV	DATE	BY	APP'D	DESCRIPTION

DESIGNED BY: A SPOONER
DRAWN BY: C WEE
CHECKED BY: P HUMMEL
APPROVED BY: P HUMMEL
SCALE: AS SHOWN
DATE: MARCH 2020

DAVID E. BRINK PARK SHORELINE RENOVATION

CONSTRUCTION MATERIALS PLAN - SOUTH

CM-1.1

SHEET # 20 OF 37

Sep 01, 2020 3:17pm cwee K:\Projects\1006-City of Kirkland\David Brink Park Shoreline Renovation\Construction Plans\1006-PL-Construction Materials Plan.dwg CM-1.1 CONSTRUCTION MATERIALS PLAN

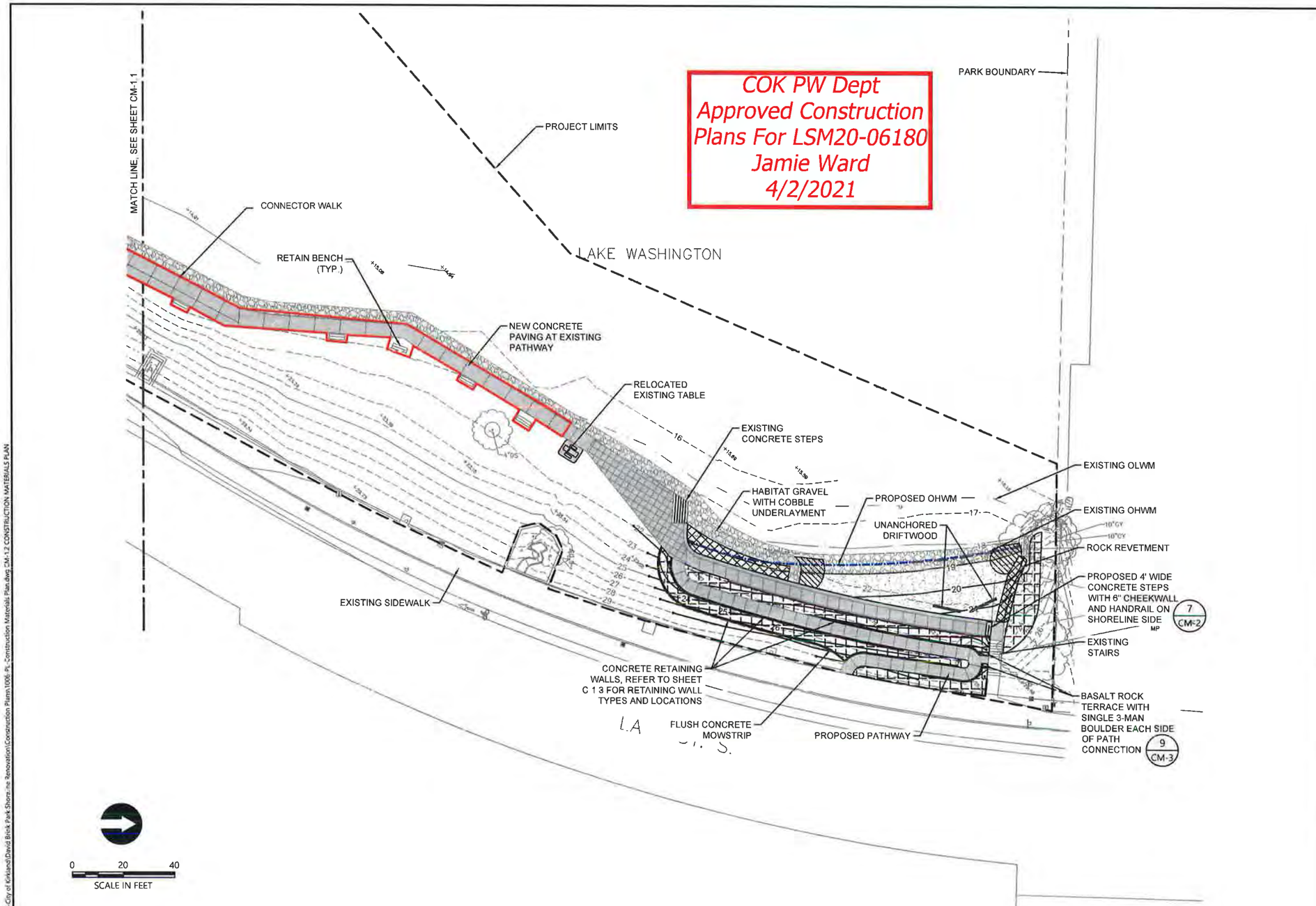

COK PW Dept
Approved Construction
Plans For LSM20-06180
Jamie Ward
4/2/2021

LEGEND:

- PARK BOUNDARY
- PROJECT LIMITS
- EXISTING CONTOUR
- EXISTING ORDINARY HIGH WATER MARK (OHWM)
- EXISTING ORDINARY LOW WATER MARK (OLWM)
- EXISTING TREE
- PROPOSED CONTOUR
- PROPOSED OHWM
- PROPOSED OLWM
- PROPOSED STANDARD CONCRETE PAVING (1 / CM-2)
- PROPOSED DECORATIVE CONCRETE PAVING (1 / CM-2)
- CONCRETE RETAINING WALL
- BEACH SAND (13 / CM-3)
- HABITAT GRAVEL (14 / CM-3)
- COBBLE (14 / CM-3)
- ROCK REVETMENT (2:1 MAX. SLOPE) (11 / CM-3)
- EXISTING BENCH TO REMAIN
- EXISTING PICNIC TABLE SALVAGED AND RELOCATED ON-SITE
- UNANCHORED DRIFTWOOD (18 / CM-4)
- TOPSOIL (6" DEPTH)
- EMERGENT TOPSOIL AREA (6 / L-2)
- NORTH BEACH SHORELINE PATH STAIR HANDRAIL (16 / CM-4)
- CONNECTOR WALK

NOTES:

1. HORIZONTAL DATUM: WASHINGTON STATE PLANE NORTH ZONE, NORTH AMERICAN DATUM OF 1983 (NAD83), U.S. SURVEY FEET
2. VERTICAL DATUM: NAVD 88
3. SURVEY PROVIDED BY STANTEC, INC IN MARCH 2019

ONE INCH
AT FULL SIZE, IF NOT ONE INCH SCALE ACCORDINGLY

PERMIT SET

ANCHOR QEA

CITY OF KIRKLAND WASHINGTON
123 Fifth Ave
Kirkland, WA 98033
(425) 587-3300

STATE OF WASHINGTON — ANNA HOOK SPOONER — NO. 2415 EXP. 09/19/2021 — LICENSED LANDSCAPE ARCHITECT

REVISIONS				
REV	DATE	BY	APP'D	DESCRIPTION

DESIGNED BY: A. SPOONER
DRAWN BY: C. WEE
CHECKED BY: P. HUMMEL
APPROVED BY: P. HUMMEL
SCALE: AS SHOWN
DATE: MARCH 2020

DAVID E. BRINK PARK SHORELINE RENOVATION

CONSTRUCTION MATERIALS PLAN - NORTH

CM-1.2

SHEET # 21 OF 37

K:\Projects\1006-City of Kirkland\David Brink Park Shore re Renovation\Construction Plans\006-PL-Construction Materials Plan.dwg, CM-1.2 CONSTRUCTION MATERIALS PLAN
Sep 01, 2020 3:17pm cwee

COK PW Dept
Approved Construction Plans For
LSM20-06180
Jamie Ward
4/2/2021

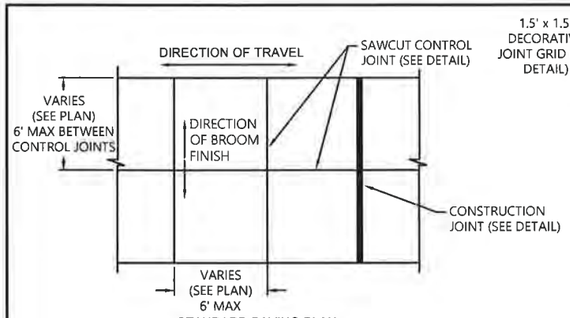

STANDARD PAVING PLAN

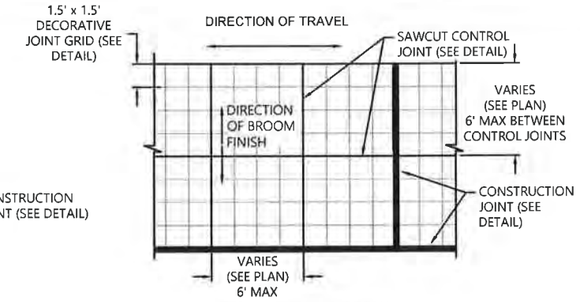

DECORATIVE PAVING PLAN

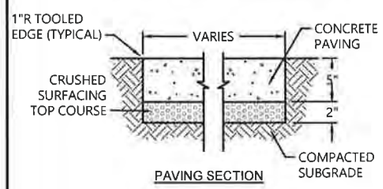

PAVING SECTION

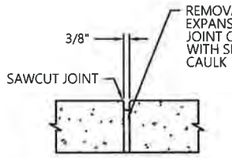

CONSTRUCTION JOINT DETAIL

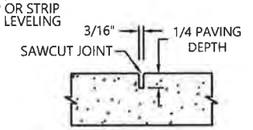

SAWCUT CONTROL JOINT DETAIL

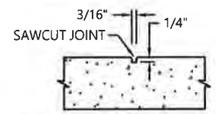

SAWCUT DECORATIVE JOINT DETAIL

NOTE: CONCRETE PAVING SHALL INCLUDE FIBERMESH PER SPECIFICATIONS.

1 CM-1.1 CONCRETE PAVING
SCALE: NOT TO SCALE

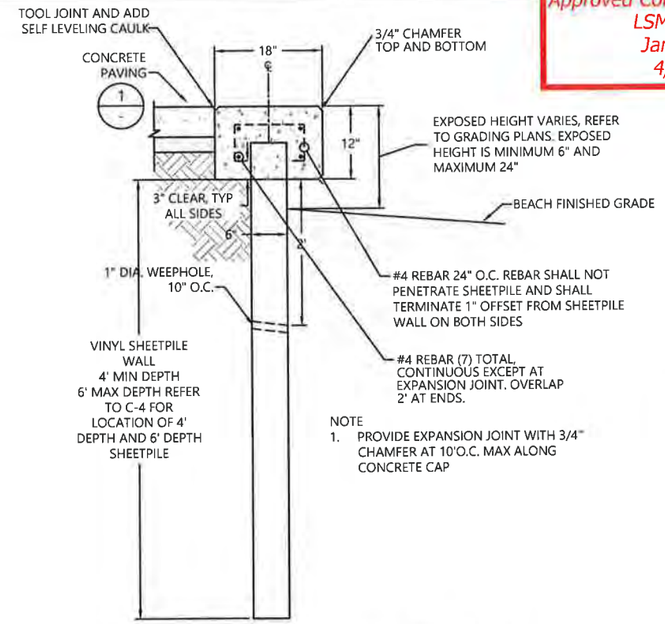

NOTE
1. PROVIDE EXPANSION JOINT WITH 3/4" CHAMFER AT 10'O.C. MAX ALONG CONCRETE CAP

2 CM-1.2 SHEETPILE WALL WITH CONCRETE CAP
SCALE: 1" = 1.0'

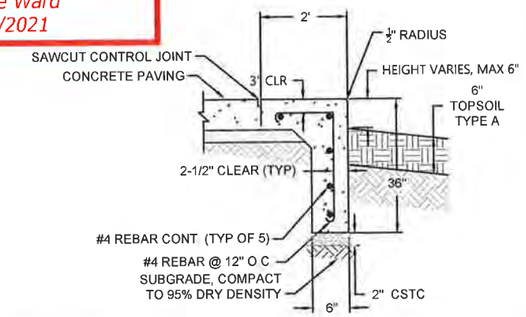

3 CM-1.1 CONCRETE PATHWAY WITH THICKENED EDGE
SCALE: 1" = 1.0'

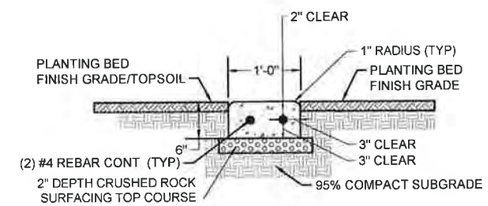

4 CM-1.2 CONCRETE MOW STRIP
SCALE: 1" = 1.0'

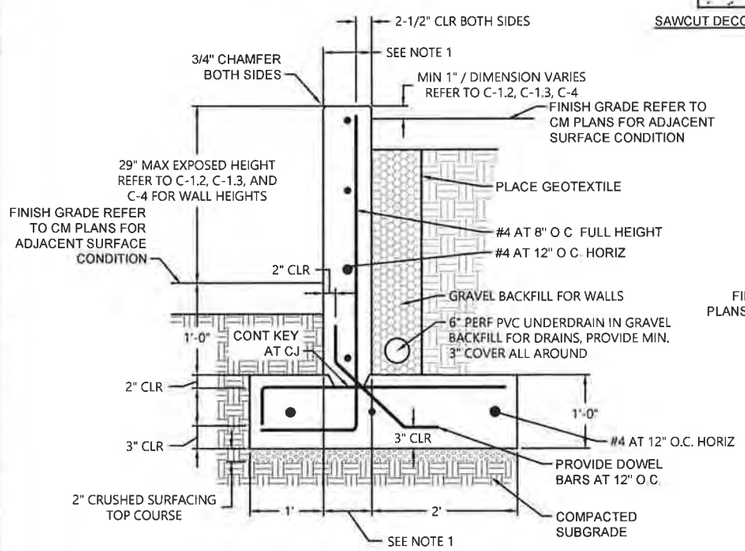

NOTES
1. TYPE 1 WALL WIDTH IS 8". TYPE 2 WALL WIDTH IS 6". REFER TO C-1.3 FOR WALL TYPE LOCATIONS.
2. PROVIDE EXPANSION JOINT WITH 3/4" CHAMFER AT 10'O.C. MAX.
3. WHEN CONCRETE RETAINING WALL IS ADJACENT TO CONCRETE PAVING, INSTALL PRE-MOLDED JOINT FILLER AT INTERFACE, USE SNAP LOCK FILLED WITH SIKA FLEX SELF-LEVELING CAULK.

5 C-1.2 CONCRETE RETAINING WALL TYPES 1 AND 2
SCALE: 1" = 1.0'

elements 1-7 permitted separately under BNR20-06182

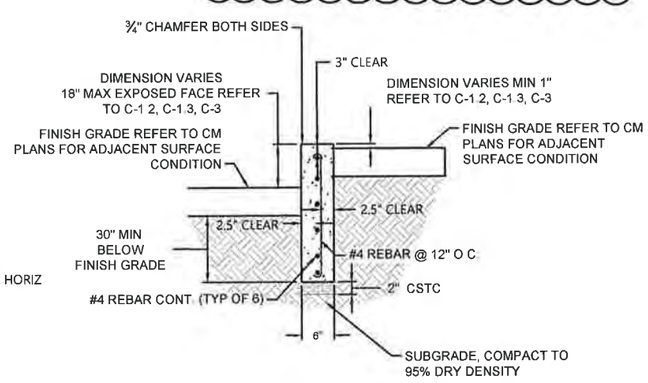

NOTES:
WHEN CONCRETE RETAINING WALL IS ADJACENT TO CONCRETE PAVING, INSTALL PRE-MOLDED JOINT FILLER AT INTERFACE, USE SNAP LOCK FILLED WITH SIKA FLEX SELF-LEVELING CAULK

6 C-1.3 CONCRETE RETAINING WALL TYPE 3
SCALE: 1" = 1.0'

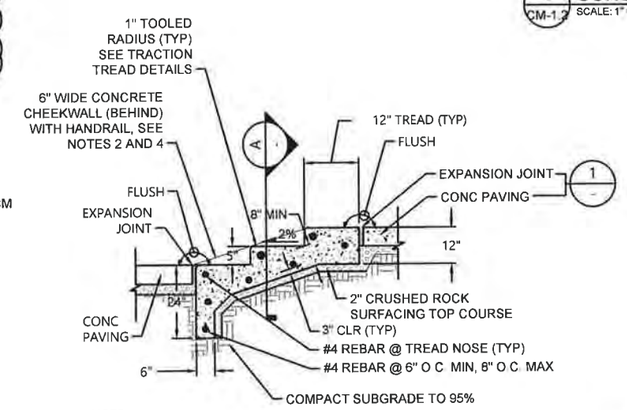

NOTE
1. REFER TO S-2 AND S-3 FOR BEACH ACCESS CONCRETE STEPS
2. SEE DETAIL 16 ON CM-4 FOR HANDRAIL AT STEPS.
3. LIGHT BROOM FINISH ON TREADS, SACK FACE OF RISERS.
4. 6" WIDE CHEEKWALL FOOTING SHALL EXTEND TO SAME DEPTH OF STAIRS AND SHALL HAVE SAME REBAR LAYOUT DESIGN AS STAIRS.

7 C-1.2 NORTH BEACH CONCRETE STEPS AT PATHWAY
SCALE: NTS

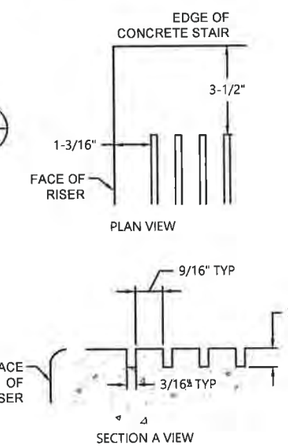

TYP TRACTION TREAD DETAILS

PERMIT SET

ONE INCH
AT FULL SIZE, IF NOT ONE INCH SCALE ACCORDINGLY

ANCHOR QEA

CITY OF KIRKLAND WASHINGTON
123 Fifth Ave
Kirkland, WA 98033
(425) 587-3300

STATE OF WASHINGTON — ANNA HOOK SPOONER — NO. 945 EXP 06/30/2021 — LICENSED LANDSCAPE ARCHITECT

REVISIONS				
REV	DATE	BY	APP'D	DESCRIPTION

DESIGNED BY: A. SPOONER
DRAWN BY: C. WEE/C. HEWETT
CHECKED BY: P. HUMMEL
APPROVED BY: P. HUMMEL
SCALE: AS SHOWN
DATE: JUNE 2020

DAVID E. BRINK PARK SHORELINE RENOVATION

CONSTRUCTION MATERIALS DETAILS (1 OF 3)

CM-2

SHEET # 22 OF 37

Sep 01, 2020 1:17pm cwee K:\Projects\1006-City of Kirkland\David Brink Park Shoreline Renovation\Construction Plans\1006-PL-CM Details.dwg CM-2 CONSTRUCTION MATERIALS DETAILS (1 OF 3)

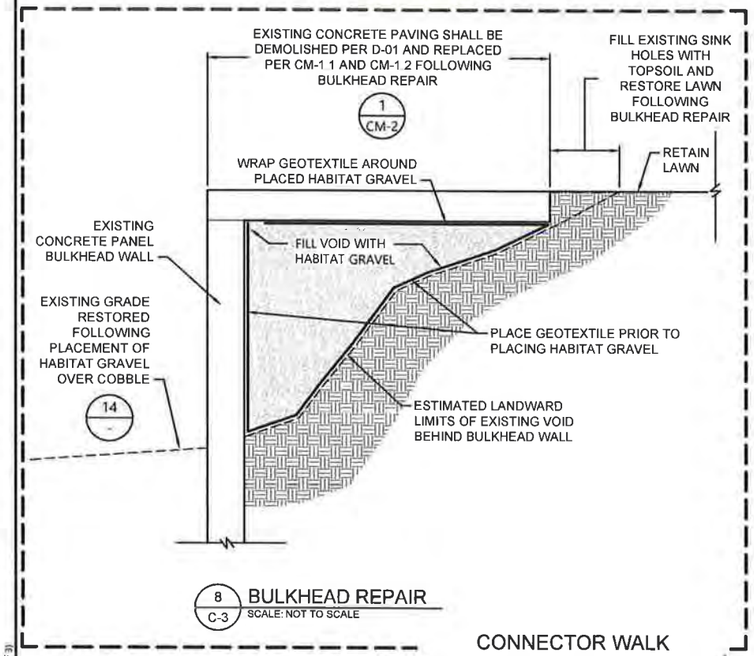

8 C-3 BULKHEAD REPAIR
SCALE: NOT TO SCALE

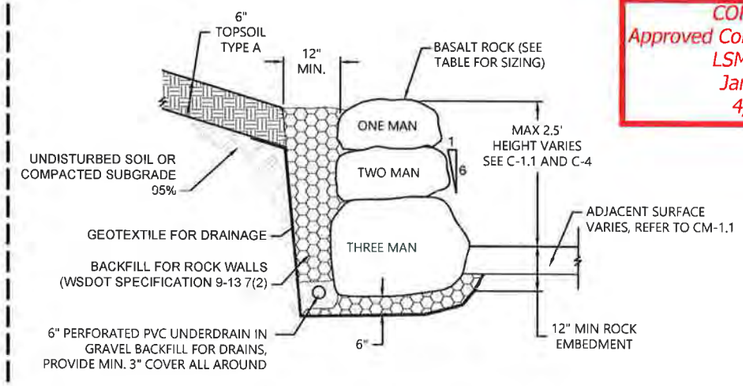

9 C-1.1 BASALT ROCK TERRACE
SCALE: NOT TO SCALE

COK PW Dept
Approved Construction Plans For
LSM20-06180
Jamie Ward
4/2/2021

BASALT ROCK TABLE		
ROCK SIZE	ROCK WEIGHT (LBS)	AVERAGE DIMENSION (IN)
ONE MAN	50-200	12 TO 18
TWO MAN	200 TO 700	18 TO 28
THREE MAN	700 TO 2,000	28 TO 36
FOUR MAN	2,000 TO 4,000	36 TO 48

ROCK SHALL BE ROCK FOR ROCK WALL (WSDOT SPECIFICATION 9-13 7(1))

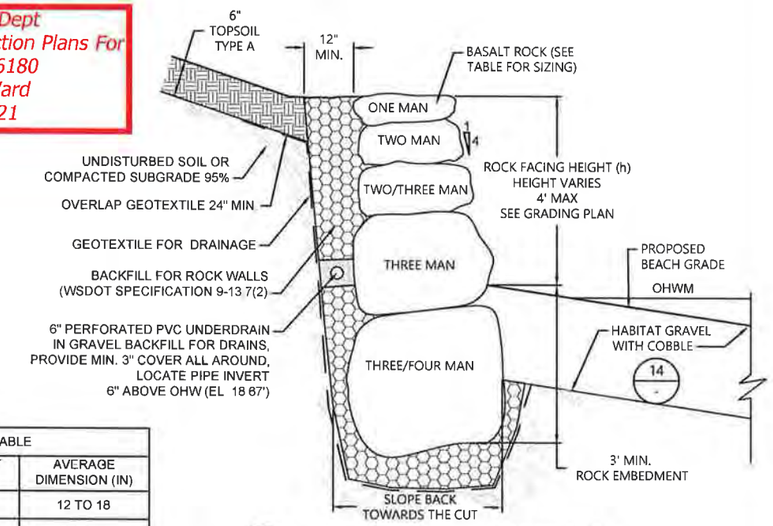

10 C-1.1 BASALT ROCKERY AT SHORELINE
SCALE: NOT TO SCALE

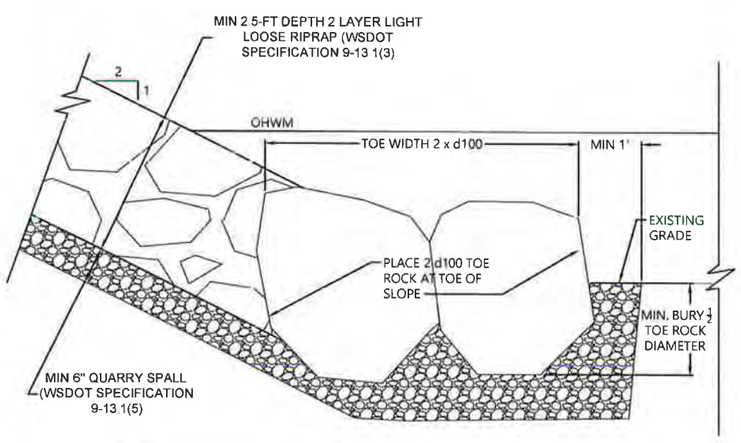

11 CM-1.1 ROCK REVETMENT
SCALE: 1" = 1.0'

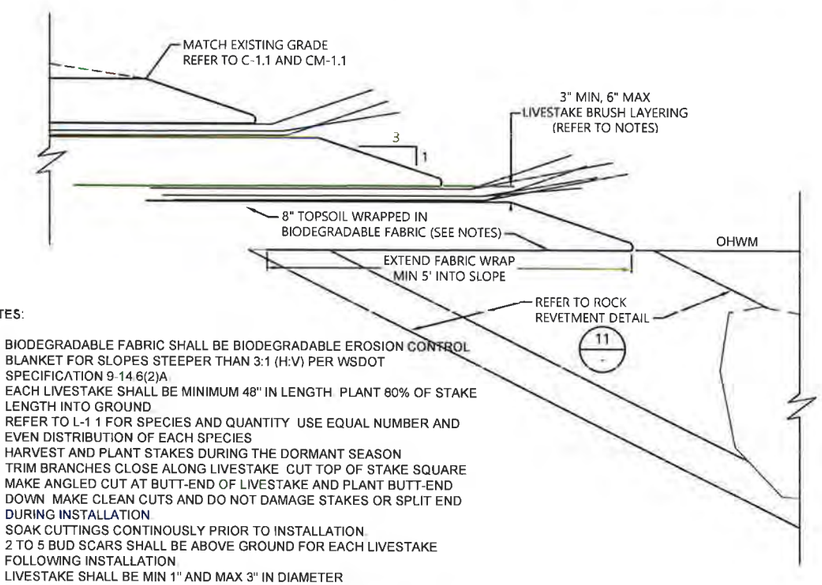

NOTES:

1. BIODEGRADABLE FABRIC SHALL BE BIODEGRADABLE EROSION CONTROL BLANKET FOR SLOPES STEEPER THAN 3:1 (H:V) PER WSDOT SPECIFICATION 9-14.6(2)A
2. EACH LIVESTAKE SHALL BE MINIMUM 48" IN LENGTH PLANT 80% OF STAKE LENGTH INTO GROUND
3. REFER TO L-1 1 FOR SPECIES AND QUANTITY USE EQUAL NUMBER AND EVEN DISTRIBUTION OF EACH SPECIES
4. HARVEST AND PLANT STAKES DURING THE DORMANT SEASON
5. TRIM BRANCHES CLOSE ALONG LIVESTAKE CUT TOP OF STAKE SQUARE MAKE ANGLED CUT AT BUTT-END OF LIVESTAKE AND PLANT BUTT-END DOWN MAKE CLEAN CUTS AND DO NOT DAMAGE STAKES OR SPLIT END DURING INSTALLATION
6. SOAK CUTTINGS CONTINOUSLY PRIOR TO INSTALLATION
7. 2 TO 5 BUD SCARS SHALL BE ABOVE GROUND FOR EACH LIVESTAKE FOLLOWING INSTALLATION
8. LIVESTAKE SHALL BE MIN 1" AND MAX 3" IN DIAMETER
9. BUNDLE MINIMUM 3 LIVESTAKES TOGETHER AND PLANT CONTINUOUSLY ALONG TOP OF COIR WRAP

12 CM-1.1 BRUSH LAYERING AT ROCK REVETMENT
SCALE: 1" = 1.0'

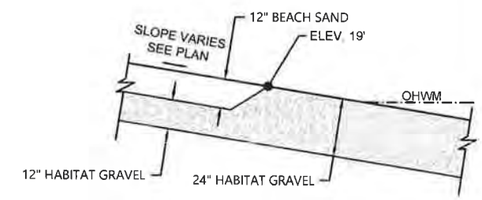

13 C-2 BEACH TYPICAL DETAIL
SCALE: NOT TO SCALE

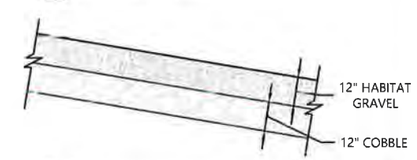

14 C-2 HABITAT GRAVEL OVER COBBLE
SCALE: NOT TO SCALE

REFER TO WSDOT SPECFICAITION SPECIAL PROVISION 9-13 6(1) FOR HABITAT GRAVEL AND 9-13 6(2) BEACH SAND COBBLE SHALL BE 8" STREAMBED COBBLE PER WSDOT SPECIFICATION 9-03 11(2)

ONE INCH
AT FULL SIZE, IF NOT ONE INCH SCALE ACCORDINGLY

PERMIT SET

K:\Projects\1106-City of Kirkland\David Brink Park Shoreline Renovation\Construction Plans\1006-PL-CM Details.dwg CM-3 CONSTRUCTION MATERIALS DETAILS (2 OF 3)

Sep 01, 2020 3:17pm owee

ANCHOR QEA

CITY OF KIRKLAND WASHINGTON

123 Fifth Ave
Kirkland, WA 98033
(425) 587-3300

STATE OF WASHINGTON
ANNA HOOK SPOONER
AND 1245 EXP. 06/ 09/2021
LICENSED LANDSCAPE ARCHITECT

REVISIONS

REV	DATE	BY	APP'D	DESCRIPTION

DESIGNED BY: A. SPOONER
DRAWN BY: C. WEE/C. HEWETT
CHECKED BY: P. HUMMEL
APPROVED BY: P. HUMMEL
SCALE: AS SHOWN
DATE: JUNE 2020

DAVID E. BRINK PARK SHORELINE RENOVATION

CONSTRUCTION MATERIALS DETAILS (2 OF 3)

CM-3

SHEET # 23 OF 37

COK PW Dept
Approved Construction Plans For
LSM20-06180
Jamie Ward
4/2/2021

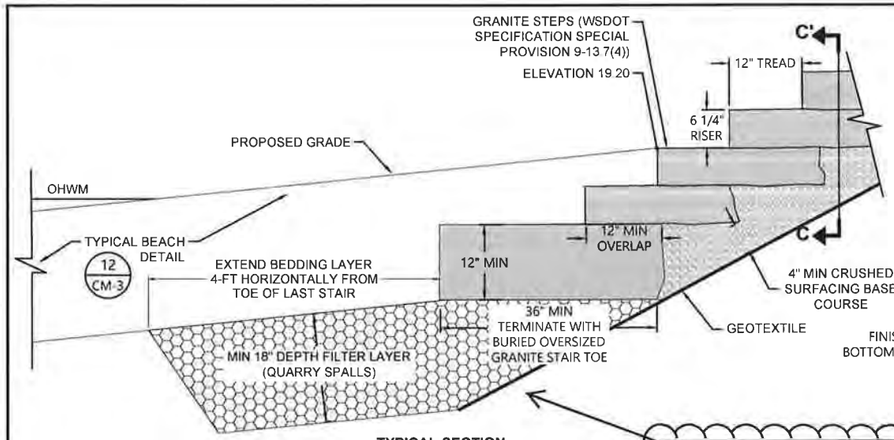

TYPICAL SECTION

elements 12 and 16 are permitted separately under BNR20-06182

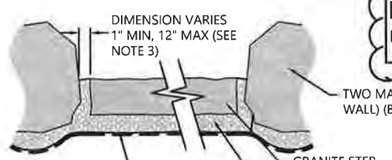

TYP. SECTION C-C'

NOTES:
1. SEE SHEET C-1.1 FOR TOP OF STAIR AND BOTTOM OF STAIR ELEVATION AND TREAD AND RISER COUNT
2. SEE DETAIL 16, THIS SHEET FOR HANDRAIL DETAIL
3. PLACE TWO MAN ROCK 12" MAX DISTANCE FROM GRANITE STEP TO ACCOMMODATE HANDRAIL FOOTING ONLY, PLACE TWO MAN ROCK AT 1" MIN AND 4" MAX ALONG GRANITE STEPS IN ALL OTHER AREAS.

15 C-1.1 GRANITE STEPS
SCALE: NOT TO SCALE

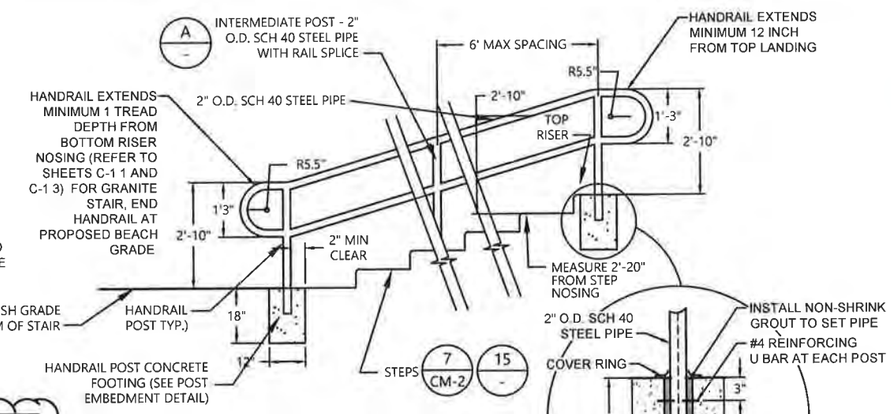

NOTES:
1. GRIND WELD JOINT SMOOTH.
2. HOT DIP GALV. AFTER FABRICATION
3. PIPE TO FOLLOW ALIGNMENT SHOWN ON PLANS.
4. PROVIDE SHOP DRAWINGS.
5. FIELD MEASURE POST LOCATIONS AND FABRICATE HANDRAILING FOLLOWING GRANITE STEP INSTALLATION.
6. EMBED HANDRAIL FOOTING DIRECTLY ADJACENT TO GRANITE STEP.
7. INSTALL 2 MAN BASALT EDGE STONE AFTER HANDRAIL INSTALLATION.
8. REFER TO STRUCTURAL PLANS FOR HANDRAIL AT BEACH ACCESS STEPS (SOUTH BEACH).

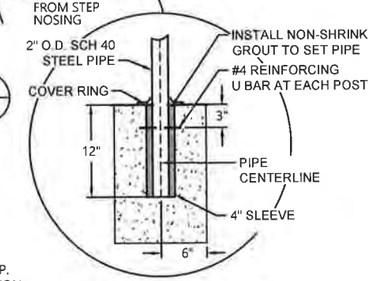

POST EMBEDMENT DETAIL
NOT TO SCALE

16 CM-1.1 HANDRAIL AT GRANITE STEPS AND NORTH BEACH CONCRETE STEPS
SCALE: NOT TO SCALE

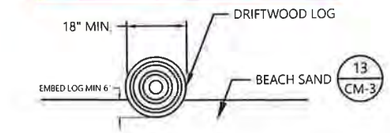

NOTES:
1. REFER TO CM-1.1 AND CM-1.2 TO LOCATE DRIFTWOOD AND LOG WITH ROOTWAD
2. REFER TO WSDOT SPECIFICATION SPECIAL PROVISION 9-14.6(10) FOR DRIFTWOOD AND 9-14.6(11) FOR LOGS WITH ROOTWADS
3. DRIFTWOOD AND LOGS WITH ROOTWADS SHALL BE PROVIDED BY THE CONTRACTOR AND PLACED AS DIRECTED BY PROJECT ENGINEER.

18 CM-1.2 UNANCHORED DRIFTWOOD
SCALE: NOT TO SCALE

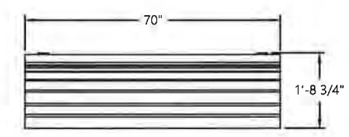

TOP VIEW

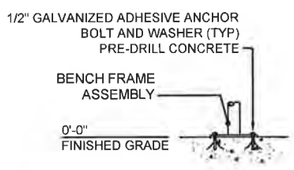

SURFACE MOUNT DETAIL

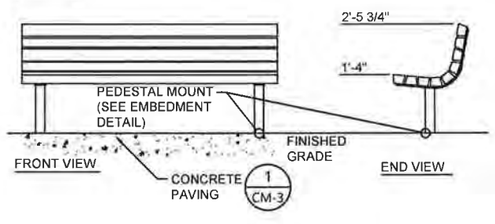

FRONT VIEW

END VIEW

NOTES:
EMBEDMENT DETAIL IS FOR BENCHES LOCATED WITHIN UPLAND PARK ONLY. REFER TO STRUCTURAL DETAILS FOR SURFACE MOUNT DETAIL FOR BENCHES ON PIER.

17 CM-1.1 BENCH
SCALE: NOT TO SCALE

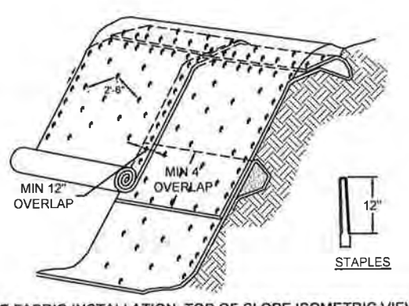

JUTE FABRIC INSTALLATION, TOP OF SLOPE ISOMETRIC VIEW
NOT TO SCALE

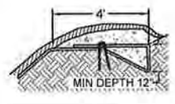

TOP OF SLOPE ANCHOR DETAIL

NOTES:
1. REFER TO WSDOT SPECIFICATION SPECIAL PROVISION 9-14.6(12) FOR JUTE MATTING.
2. SLOPE SURFACE SHALL BE FREE OF ROCKS, CLODS, STICKS AND GRASS. MATS/BLANKETS SHALL HAVE GOOD SOIL CONTACT
3. LAY BLANKETS LOOSELY AND STAKE OR STAPLE TO MAINTAIN DIRECT CONTACT WITH THE SOIL. DO NOT STRETCH
4. MATS/BLANKETS SHOULD BE INSTALLED VERTICALLY DOWNSLOPE
5. INSTALL JUTE MAT OVER ENTIRE PLANTING AREA. AVOID EXISTING TREES AND EXISTING STUMPS.
6. WATTLES SHALL BE PLACED OVER JUTE MATTING. EXCAVATE WATTLE TRENCH (SEE DETAIL XX) PRIOR TO PLACING JUTE FABRIC
7. JUTE FABRIC SHALL BE ROLLED IN A CONTROLLED FASHION. INSTALL STAPLES AS MAT IS UNROLLED. FABRIC SHALL NOT BE ALLOWED TO ROLL DOWN THE SLOPE ON ITS OWN.

19 CM-1.1 JUTE FABRIC SLOPE PROTECTION
SCALE: NTS

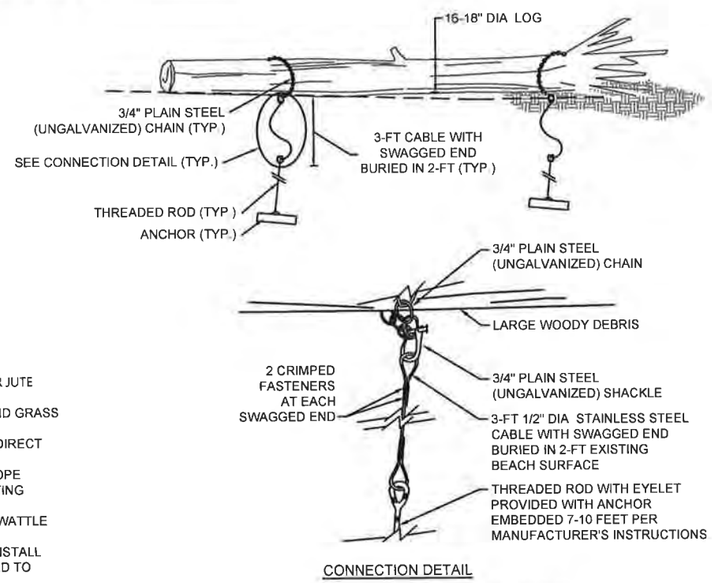

CONNECTION DETAIL

20 CM-1.1 ANCHORED LARGE WOODY DEBRIS
SCALE: NOT TO SCALE

PERMIT SET

ONE INCH
AT FULL SIZE, IF NOT ONE INCH SCALE ACCORDINGLY

ANCHOR QEA

CITY OF KIRKLAND WASHINGTON
123 Fifth Ave
Kirkland, WA 98033
(425) 587-3300

STATE OF WASHINGTON — ANNA HOOK SPOONER — NO. 245 EXP. 09/30/2021 — LICENSED LANDSCAPE ARCHITECT

REVISIONS

REV	DATE	BY	APP'D	DESCRIPTION

DESIGNED BY: A. SPOONER
DRAWN BY: C. WEE/C. HEWETT
CHECKED BY: P. HUMMEL
APPROVED BY: P. HUMMEL
SCALE: AS SHOWN
DATE: JUNE 2020

DAVID E. BRINK PARK SHORELINE RENOVATION

CONSTRUCTION MATERIALS DETAILS (3 OF 3)

CM-4

SHEET # 24 OF 37

K:\Projects\1006-City of Kirkland\David Brink Park Shoreline Renovation\Construction Plans\1006-PL-CM Details.dwg CM-3 CONSTRUCTION MATERIALS DETAILS (3 OF 3)

Sep 01, 2020 3:17pm cwee

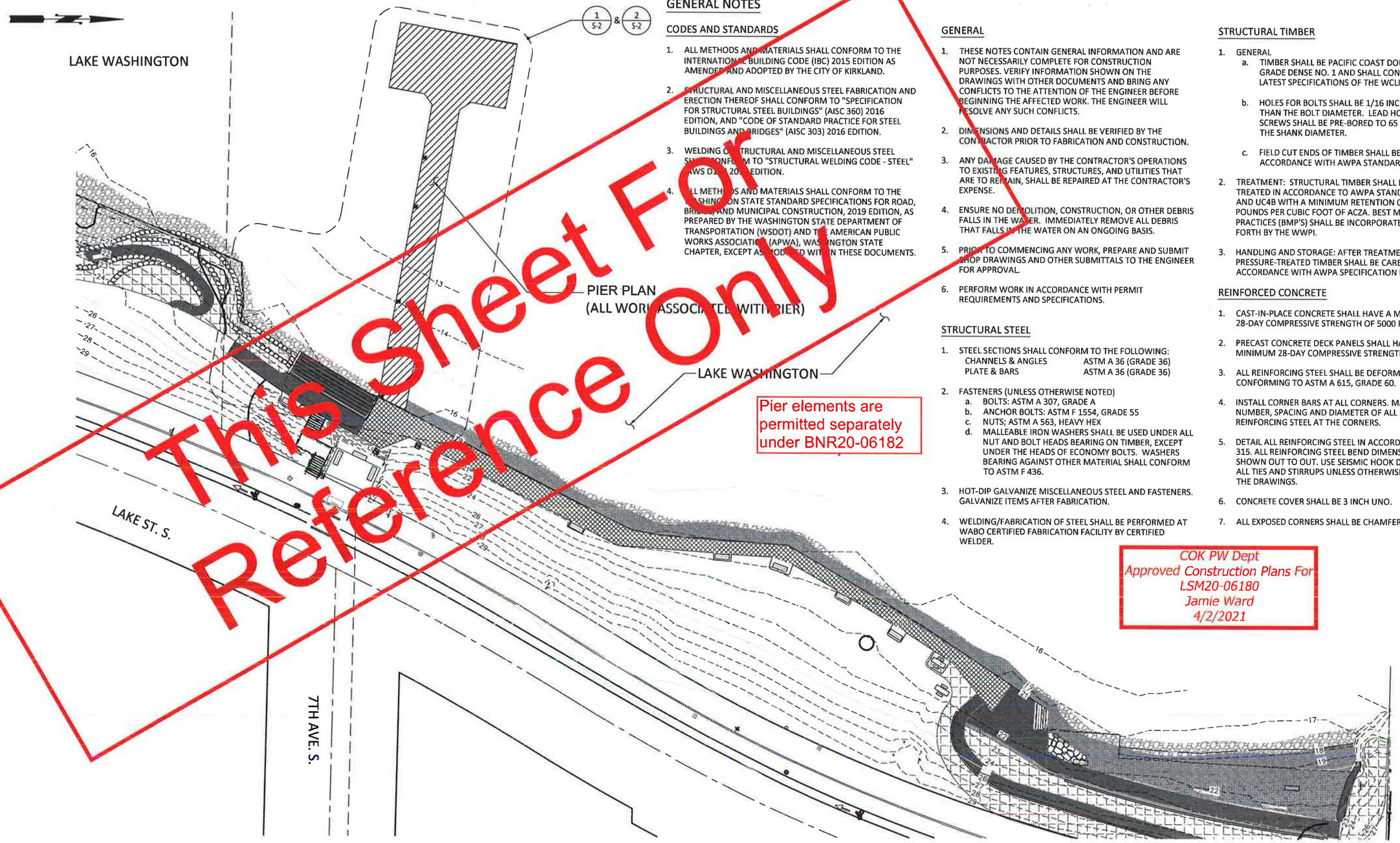

Pier elements are permitted separately under BNR20-06182

This Sheet For Reference Only

GENERAL NOTES

CODES AND STANDARDS

1. ALL METHODS AND MATERIALS SHALL CONFORM TO THE INTERNATIONAL BUILDING CODE (IBC) 2015 EDITION AS AMENDED AND ADOPTED BY THE CITY OF KIRKLAND.
2. STRUCTURAL AND MISCELLANEOUS STEEL FABRICATION AND ERECTION THEREOF SHALL CONFORM TO "SPECIFICATION FOR STRUCTURAL STEEL BUILDINGS" (AISC 360) 2016 EDITION, AND "CODE OF STANDARD PRACTICE FOR STEEL BUILDINGS AND BRIDGES" (AISC 303) 2016 EDITION.
3. WELDING OF STRUCTURAL AND MISCELLANEOUS STEEL SHALL CONFORM TO "STRUCTURAL WELDING CODE - STEEL" AWS D1.1 2015 EDITION.
4. ALL METHODS AND MATERIALS SHALL CONFORM TO THE WASHINGTON STATE STANDARD SPECIFICATIONS FOR ROAD, BRIDGE, AND MUNICIPAL CONSTRUCTION, 2019 EDITION, AS PREPARED BY THE WASHINGTON STATE DEPARTMENT OF TRANSPORTATION (WSDOT) AND THE AMERICAN PUBLIC WORKS ASSOCIATION (APWA), WASHINGTON STATE CHAPTER, EXCEPT AS MODIFIED WITHIN THESE DOCUMENTS.

GENERAL

1. THESE NOTES CONTAIN GENERAL INFORMATION AND ARE NOT NECESSARILY COMPLETE FOR CONSTRUCTION PURPOSES. VERIFY INFORMATION SHOWN ON THE DRAWINGS WITH OTHER DOCUMENTS AND BRING ANY CONFLICTS TO THE ATTENTION OF THE ENGINEER BEFORE BEGINNING THE AFFECTED WORK. THE ENGINEER WILL RESOLVE ANY SUCH CONFLICTS.
2. DIMENSIONS AND DETAILS SHALL BE VERIFIED BY THE CONTRACTOR PRIOR TO FABRICATION AND CONSTRUCTION.
3. ANY DAMAGE CAUSED BY THE CONTRACTOR'S OPERATIONS TO EXISTING FEATURES, STRUCTURES, AND UTILITIES THAT ARE TO REMAIN, SHALL BE REPAIRED AT THE CONTRACTOR'S EXPENSE.
4. ENSURE NO DEMOLITION, CONSTRUCTION, OR OTHER DEBRIS FALLS IN THE WATER. IMMEDIATELY REMOVE ALL DEBRIS THAT FALLS IN THE WATER ON AN ONGOING BASIS.
5. PRIOR TO COMMENCING ANY WORK, PREPARE AND SUBMIT SHOP DRAWINGS AND OTHER SUBMITTALS TO THE ENGINEER FOR APPROVAL.
6. PERFORM WORK IN ACCORDANCE WITH PERMIT REQUIREMENTS AND SPECIFICATIONS.

STRUCTURAL STEEL

1. STEEL SECTIONS SHALL CONFORM TO THE FOLLOWING:
   CHANNELS & ANGLES — ASTM A 36 (GRADE 36)
   PLATE & BARS — ASTM A 36 (GRADE 36)
2. FASTENERS (UNLESS OTHERWISE NOTED)
   a. BOLTS: ASTM A 307, GRADE A
   b. ANCHOR BOLTS: ASTM F 1554, GRADE 55
   c. NUTS; ASTM A 563, HEAVY HEX
   d. MALLEABLE IRON WASHERS SHALL BE USED UNDER ALL NUT AND BOLT HEADS BEARING ON TIMBER, EXCEPT UNDER THE HEADS OF ECONOMY BOLTS. WASHERS BEARING AGAINST OTHER MATERIAL SHALL CONFORM TO ASTM F 436.
3. HOT-DIP GALVANIZE MISCELLANEOUS STEEL AND FASTENERS. GALVANIZE ITEMS AFTER FABRICATION.
4. WELDING/FABRICATION OF STEEL SHALL BE PERFORMED AT WABO CERTIFIED FABRICATION FACILITY BY CERTIFIED WELDER.

STRUCTURAL TIMBER

1. GENERAL
   a. TIMBER SHALL BE PACIFIC COAST DOUGLAS FIR, GRADE DENSE NO. 1 AND SHALL CONFORM TO THE LATEST SPECIFICATIONS OF THE WCLIB.
   b. HOLES FOR BOLTS SHALL BE 1/16 INCH LARGER THAN THE BOLT DIAMETER. LEAD HOLES FOR LAG SCREWS SHALL BE PRE-BORED TO 65 PERCENT OF THE SHANK DIAMETER.
   c. FIELD CUT ENDS OF TIMBER SHALL BE TREATED IN ACCORDANCE WITH AWPA STANDARD M4.
2. TREATMENT: STRUCTURAL TIMBER SHALL BE PRESSURE TREATED IN ACCORDANCE TO AWPA STANDARDS T1, U1 AND UC4B WITH A MINIMUM RETENTION OF 0.60 POUNDS PER CUBIC FOOT OF ACZA. BEST MANAGEMENT PRACTICES (BMP'S) SHALL BE INCORPORATED AS SET FORTH BY THE WWPI.
3. HANDLING AND STORAGE: AFTER TREATMENT, PRESSURE-TREATED TIMBER SHALL BE CARED FOR IN ACCORDANCE WITH AWPA SPECIFICATION M4.

REINFORCED CONCRETE

1. CAST-IN-PLACE CONCRETE SHALL HAVE A MINIMUM 28-DAY COMPRESSIVE STRENGTH OF 5000 PSI.
2. PRECAST CONCRETE DECK PANELS SHALL HAVE A MINIMUM 28-DAY COMPRESSIVE STRENGTH OF 6000 PSI.
3. ALL REINFORCING STEEL SHALL BE DEFORMED STEEL BARS CONFORMING TO ASTM A 615, GRADE 60.
4. INSTALL CORNER BARS AT ALL CORNERS. MATCH THE NUMBER, SPACING AND DIAMETER OF ALL HORIZONTAL REINFORCING STEEL AT THE CORNERS.
5. DETAIL ALL REINFORCING STEEL IN ACCORDANCE WITH ACI 315. ALL REINFORCING STEEL BEND DIMENSIONS ARE SHOWN OUT TO OUT. USE SEISMIC HOOK DETAILS FOR ALL TIES AND STIRRUPS UNLESS OTHERWISE SHOWN ON THE DRAWINGS.
6. CONCRETE COVER SHALL BE 3 INCH UNO.
7. ALL EXPOSED CORNERS SHALL BE CHAMFERED 3/4" INCH

COK PW Dept
Approved Construction Plans For
LSM20-06180
Jamie Ward
4/2/2021

PERMIT SET

ONE INCH — AT FULL SIZE, IF NOT ONE INCH SCALE ACCORDINGLY

ANCHOR QEA

CITY OF KIRKLAND WASHINGTON
123 Fifth Ave
Kirkland, WA 98033
(425) 587-3300

WSP USA Inc.
33301 9th Avenue South
Suite 300
Federal Way, WA 98003-2600
TEL: (206) 431-2300
FAX: (206) 431-2250

JOSEPH R. GALLOWAY — STATE OF WASHINGTON — 32808 — REGISTERED PROFESSIONAL ENGINEER

REVISIONS

REV	DATE	BY	APP'D	DESCRIPTION

DESIGNED BY: C. ENG
DRAWN BY: J. MENDENHALL
CHECKED BY: C. ENG
APPROVED BY: J. GALLOWAY
SCALE: AS NOTED
DATE: September 2020

DAVID E. BRINK PARK SHORELINE RENOVATION
90% DESIGN

STRUCTURAL PLAN

S-1

SHEET NO. 18 OF 23

R:\USFDW100\Projects\2019\A19.0173\00\CADD\Dwgs\01_S01.dwg Layout1

Sep 01, 2020 2:56pm USJM67541

This Sheet For Reference Only

GRID SCHEDULE		
GRID	x'-xx" from	GRID
A.6	6'-5 1/2"	'A'
A.8	10'-4"	'A'
B.9	6'-2"	'B'
C.4	2'-9 3/4"	'C'
C.6	6'-9 3/4"	'C'
D.2	1'-0 3/4"	'D'
E.2	1'-8 1/2"	'E'
E.4	5'-7"	'E'

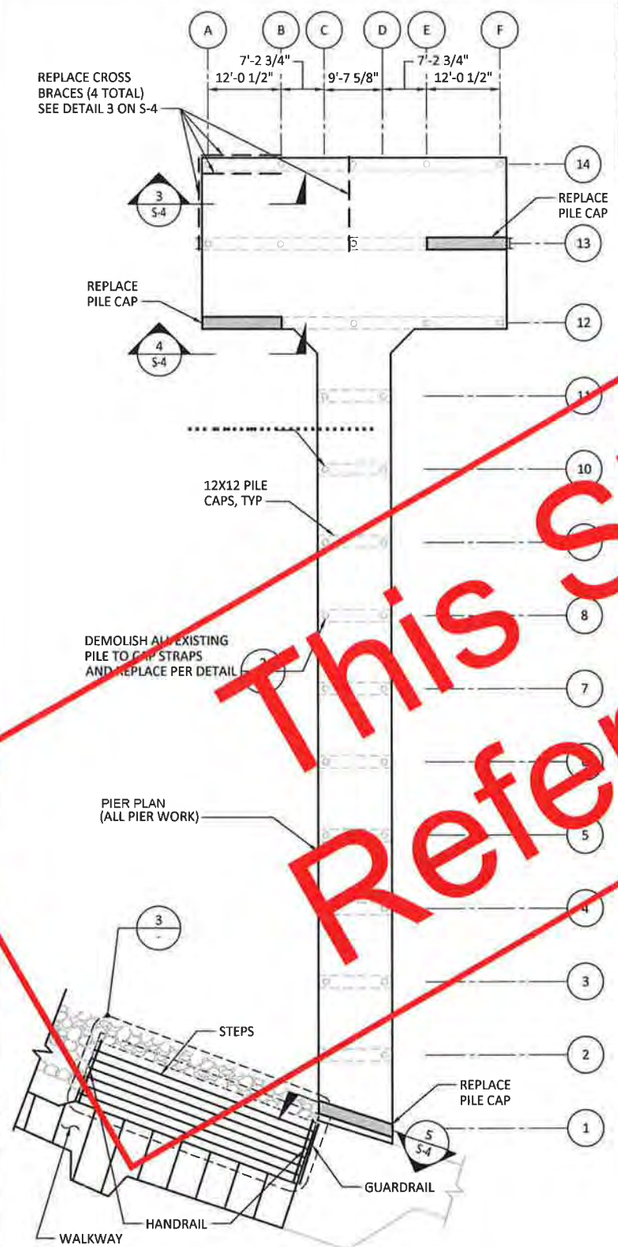

1 S-1 **PILE & CAP PLAN - PIER**
SCALE: 1' = 12'-0"

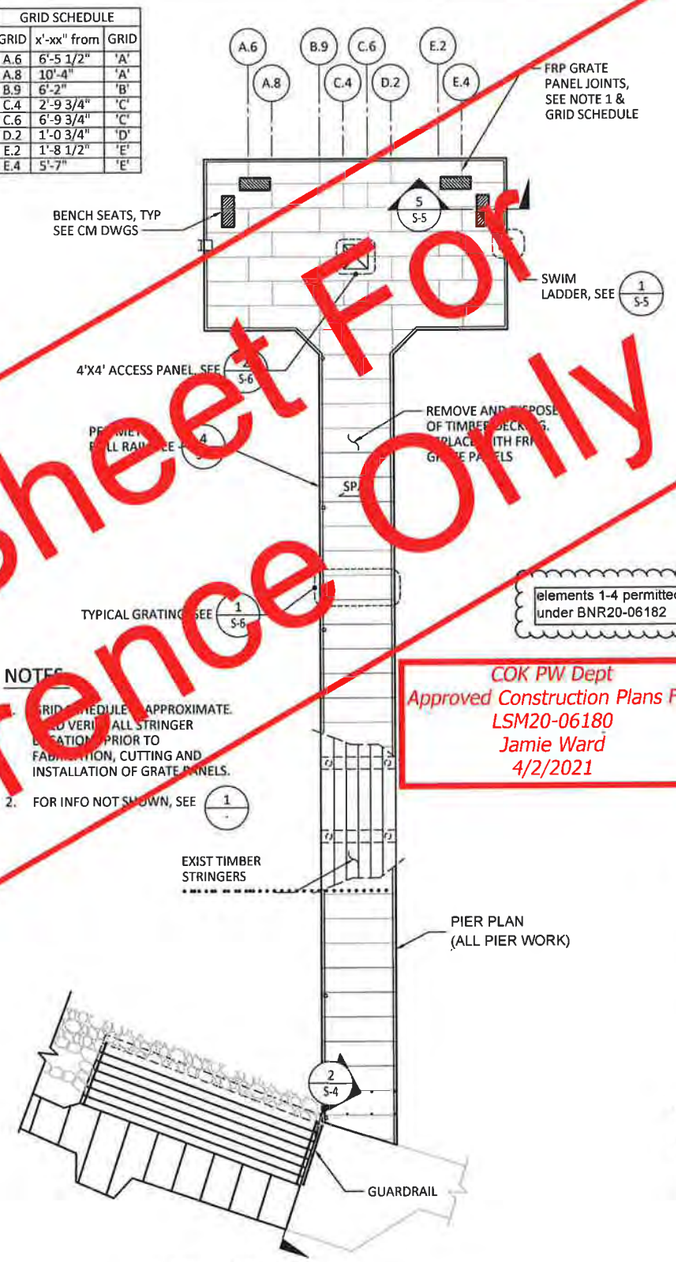

2 S-1 **SURFACE PLAN - PIER**
SCALE: 1' = 12'-0"

NOTES:
1. GRID SCHEDULE IS APPROXIMATE. TO VERIFY ALL STRINGER LOCATIONS PRIOR TO FABRICATION, CUTTING AND INSTALLATION OF GRATE PANELS.
2. FOR INFO NOT SHOWN, SEE

elements 1-4 permitted separately under BNR20-06182

COK PW Dept
Approved Construction Plans For
LSM20-06180
Jamie Ward
4/2/2021

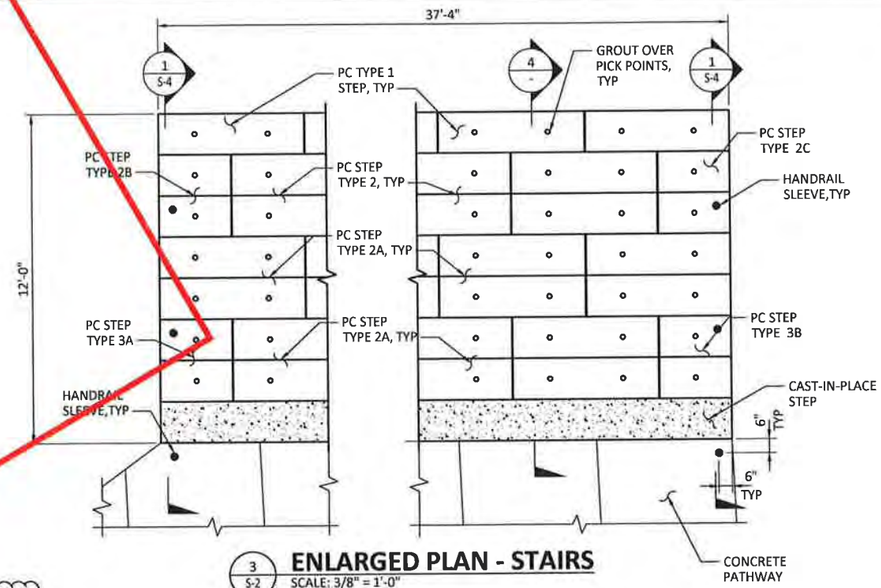

3 S-2 **ENLARGED PLAN - STAIRS**
SCALE: 3/8" = 1'-0"

NOTE:
HANDRAILS NOT SHOWN

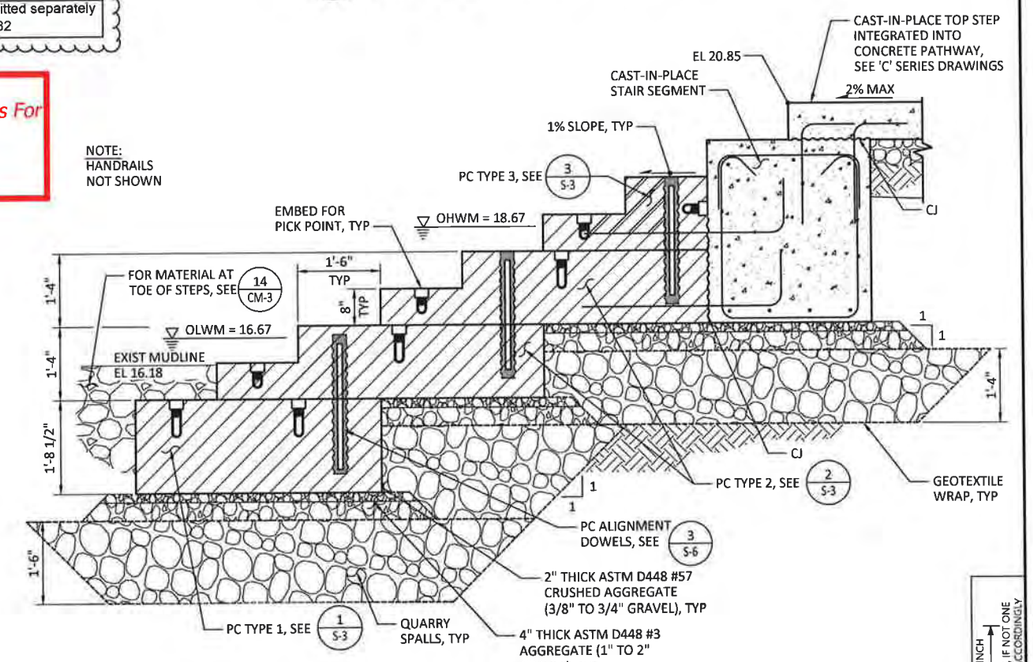

4 **SECTION**
SCALE: 3/4" = 1'-0"

PERMIT SET

ONE INCH
AT FULL SIZE, IF NOT ONE INCH SCALE ACCORDINGLY

R:\USFDW100\Project\2019\A19.0173\00\CADD\Dwgs\01_S02.dwg Layout1

Sep 01, 2020 2:07pm USIM67471

ANCHOR QEA

CITY OF KIRKLAND WASHINGTON
123 Fifth Ave
Kirkland, WA 98033
(425) 587-3300

WSP
WSP USA Inc.
33301 9th Avenue South
Suite 300
Federal Way, WA 98003-2600
TEL: (206) 431-2300
FAX: (206) 431-2250

JOSEPH R. GALLOWAY
STATE OF WASHINGTON
52808
REGISTERED PROFESSIONAL ENGINEER

REVISIONS

REV	DATE	BY	APP'D	DESCRIPTION

DESIGNED BY: C ENG
DRAWN BY: J MENDENHALL
CHECKED BY: C ENG
APPROVED BY: J GALLOWAY
SCALE: AS NOTED
DATE: September 2020

DAVID E. BRINK PARK SHORELINE RENOVATION
90% DESIGN

PIER AND STEPS PLAN

S-2

SHEET NO 19 OF 23

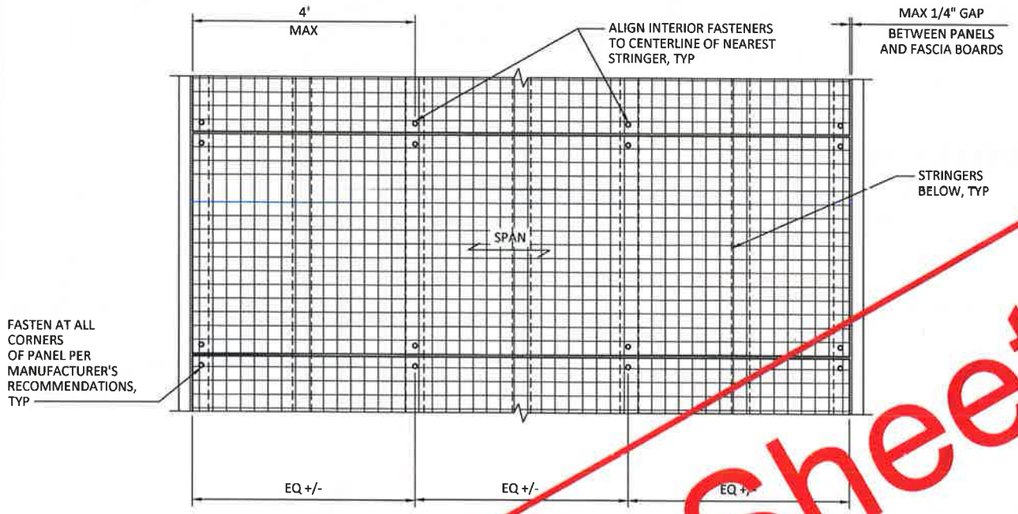

1 / S-2 **DETAIL - TYPICAL GRATING**
SCALE: 3/4" = 1'-0" (PIER PLAN)

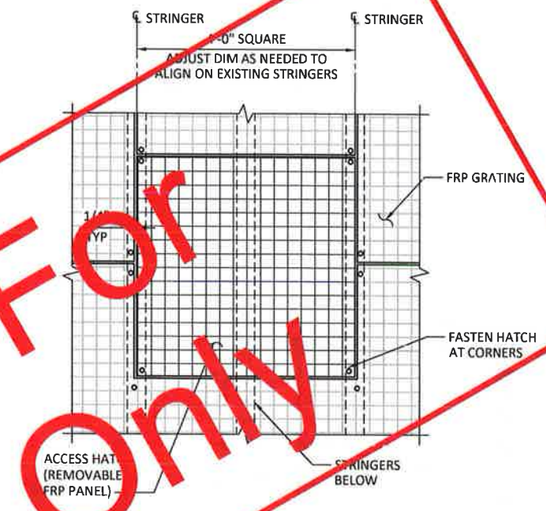

2 / S-2 **DETAIL - ACCESS HATCH GRATING**
SCALE: 3/4" = 1'-0" (PIER PLAN)

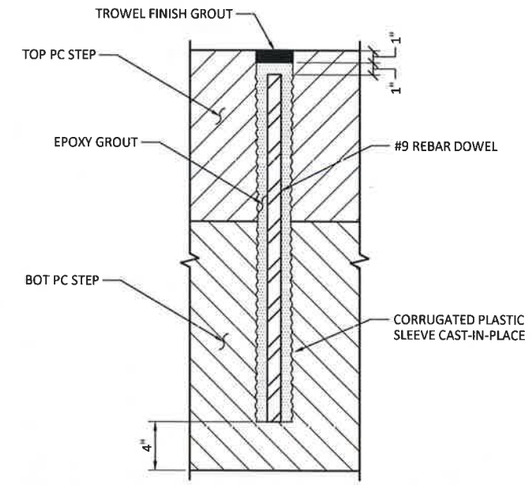

3 / S-3 **DETAIL - PC ALIGNMENT DOWEL**
SCALE: 2" = 1'-0"

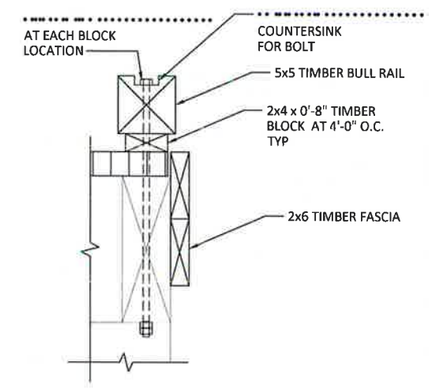

4 / S-4 **DETAIL - BULL RAIL**
SCALE: 2" = 1'-0" (PIER PLAN)

elements 1-4 permitted separately under BNR20-06182

COK PW Dept
Approved Construction Plans For
LSM20-06180
Jamie Ward
4/2/2021

This Sheet For Reference Only

PERMIT SET

ONE INCH
AT FULL SIZE, IF NOT ONE INCH SCALE ACCORDINGLY

ANCHOR QEA

CITY OF KIRKLAND WASHINGTON
123 Fifth Ave
Kirkland, WA 98033
(425) 587-3300

WSP
WSP USA Inc.
33301 9th Avenue South
Suite 300
Federal Way, WA 98003-2600
TEL: (206) 431-2300
FAX: (206) 431-2250

JOSEPH R. GALLOWAY
STATE OF WASHINGTON
52868
REGISTERED PROFESSIONAL ENGINEER

REVISIONS

REV	DATE	BY	APP'D	DESCRIPTION

DESIGNED BY: C. ENG
DRAWN BY: J. MENDENHALL
CHECKED BY: C. ENG
APPROVED BY: J. GALLOWAY
SCALE: AS NOTED
DATE: September 2020

DAVID E. BRINK PARK SHORELINE RENOVATION
90% DESIGN

STRUCTURAL SECTIONS
SHEET 3

S-6

SHEET NO. 23 OF 23

R:\USFDW100\Projects\2019\A19.0173\00\CADD\Dwgs\01_S06.dwg Layout1

Sep 01, 2020 2:06pm USIM675471

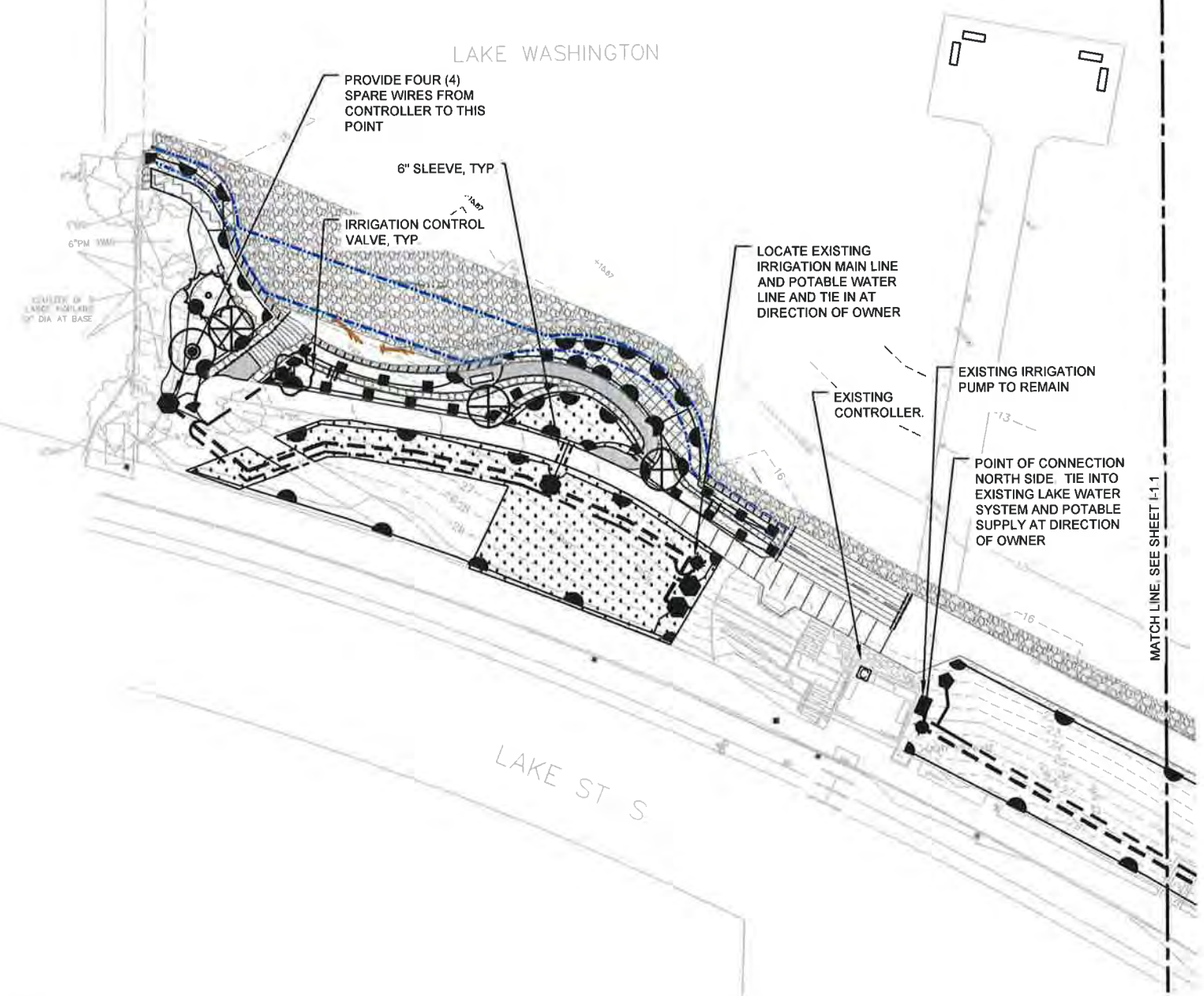

0 20 40
SCALE IN FEET

VALVE KEY

VALVE	SIZE	GPM	PSI	XPR MODULE
1	1"	22	30	YES
2	1.5"	35	30	YES
3	1.5"	43	60	NO
4	1.5"	36	60	NO
5	1"	18	60	NO
6	1.5"	36	60	NO
7	1"	29	60	NO
8	1"	27	60	NO
9	1.5"	42	30	YES
10	1"	19	30	YES
11	–	–	–	–
12	–	–	–	–

COK PW Dept
Approved Construction Plans For
LSM20-06180
Jamie Ward
4/2/2021

NOTES:

1. HORIZONTAL DATUM: WASHINGTON STATE PLANE NORTH ZONE, NORTH AMERICAN DATUM OF 1983 (NAD83), U.S. SURVEY FEET
2. VERTICAL DATUM: NAVD 88
3. SURVEY PROVIDED BY STANTEC, INC IN MARCH 2019

ONE INCH
AT FULL SIZE, IF NOT ONE INCH SCALE ACCORDINGLY

PERMIT SET

K:\Projects\1006-City of Kirkland\David Brink Park Shoreline Renovation\Construction Plans\1006-PL-Irrigation.dwg I-1.1 IRRIGATION PLAN
Sep 01, 2020 3:18pm cwee

ANCHOR QEA

CITY OF KIRKLAND WASHINGTON

123 Fifth Ave
Kirkland, WA 98033
(425) 587-3300

STATE OF WASHINGTON
ANNA HOOK SPOONER
NO. 2245 EXP. DEC 31, 2021
LICENSED LANDSCAPE ARCHITECT

REVISIONS

REV	DATE	BY	APP'D	DESCRIPTION

DESIGNED BY: W. STEWART
DRAWN BY: C. WEE/C. HEWETT
CHECKED BY: P. HUMMEL
APPROVED BY: P. HUMMEL
SCALE: AS SHOWN
DATE: JUNE 2020

DAVID E. BRINK PARK SHORELINE RENOVATION

IRRIGATION PLAN - SOUTH

I-1.1

SHEET # 31 OF 37

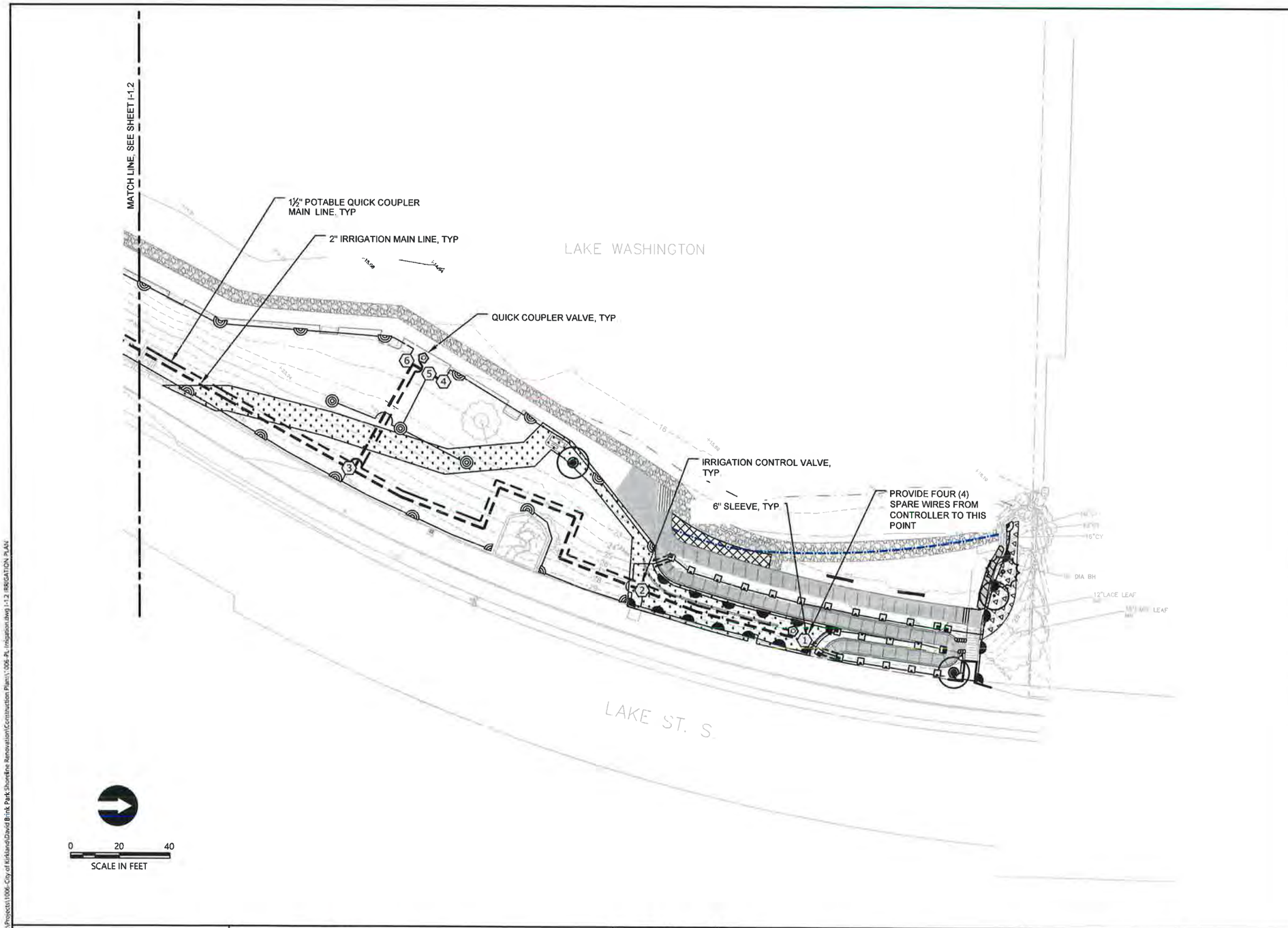

VALVE KEY

VALVE	SIZE	GPM	PSI	XPR MODULE
1	1"	22	30	YES
2	1.5"	35	30	YES
3	1.5"	43	60	NO
4	1.5"	36	60	NO
5	1"	18	60	NO
6	1.5"	36	60	NO
7	1"	29	60	NO
8	1"	27	60	NO
9	1.5"	42	30	YES
10	1"	19	30	YES
11	–	–	–	–
12	–	–	–	–

COK PW Dept
Approved Construction Plans For
LSM20-06180
Jamie Ward
4/2/2021

NOTES:

1. HORIZONTAL DATUM: WASHINGTON STATE PLANE NORTH ZONE, NORTH AMERICAN DATUM OF 1983 (NAD83), U.S. SURVEY FEET
2. VERTICAL DATUM: NAVD 88
3. SURVEY PROVIDED BY STANTEC, INC IN MARCH 2019
4. BW ELEVATIONS ARE TO FINISH GRADE

ONE INCH
AT FULL SIZE, IF NOT ONE INCH SCALE ACCORDINGLY

PERMIT SET

ANCHOR QEA

CITY OF KIRKLAND WASHINGTON

123 Fifth Ave
Kirkland, WA 98033
(425) 587-3300

STATE OF WASHINGTON ANNA HOOK SPOONER LICENSED LANDSCAPE ARCHITECT

REVISIONS

REV	DATE	BY	APP'D	DESCRIPTION

DESIGNED BY: W. STEWART
DRAWN BY: C. WEE/C. HEWETT
CHECKED BY: P. HUMMEL
APPROVED BY: P. HUMMEL
SCALE: AS SHOWN
DATE: JUNE 2020

DAVID E. BRINK PARK SHORELINE RENOVATION

IRRIGATION PLAN - NORTH

I-1.2

SHEET # 32 OF 37

Sep 01, 2020 3:18pm cwee K:\Projects\1006-City of Kirkland\David Brink Park Shoreline Renovation\Construction Plans\1-006-PL Irrigation.dwg I-1.2 IRRIGATION PLAN

NOTES:
1. DO NOT ALLOW VAULT TO REST ON PIPE.
2. ALL BOLT COVERS TO BE LOCKING TYPE, BOLT INSTALLED.
3. PROVIDE MINIMUM 6" DEPTH 5/8" DRAIN ROCK THROUGHOUT.

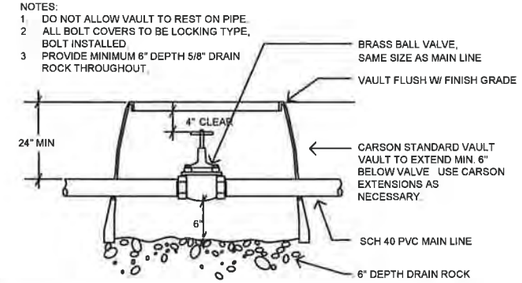

1 / I-1.1 ISOLATION VALVE
SCALE:NTS

MASTER VALVE ASSEMBLY NOTES
1. DO NOT ALLOW VAULT TO REST ON PIPE. USE EXTENSIONS AS NECESSARY. VAULT TO EXTEND TO BOTTOM OF DRAIN ROCK.
2. ALL FITTINGS TO BE SAME SIZE AS MASTER VALVE
3. ALL SCHEDULE 40 PVC PIPE AND FITTINGS FROM PUMP TO FLOW SENSOR
4. PROVIDE MIN. 6" DEPTH DRAIN ROCK

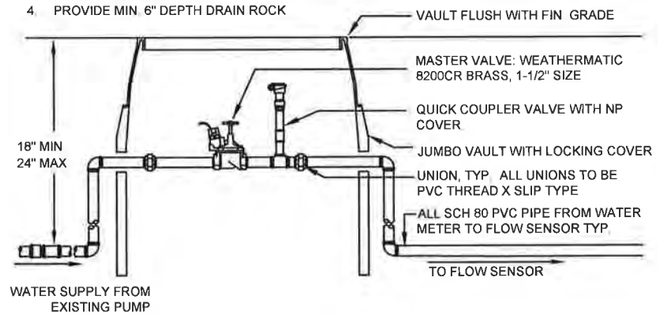

2 / I-1.1 MASTER VALVE ASSEMBLY
SCALE:NTS

NOTES:
1. DO NOT ALLOW VAULT TO REST ON PIPE. USE EXTENSIONS AS NECESSARY.
2. VALVE TO BE SET PLUMB & CENTERED IN VALVE BOX.
3. CONTRACTOR TO PROVIDE (2) EACH QCV KEYS AND SWIVEL HOSE ELLS.
4. PROVIDE 6" DEPTH DRAIN ROCK.

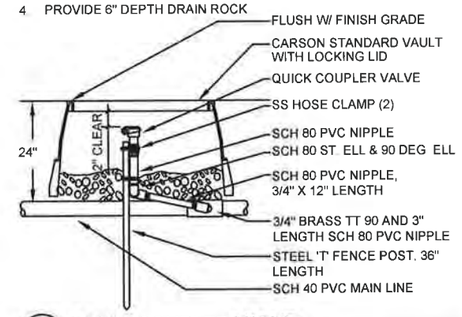

3 / I-1.1 QUICK COUPLER VALVE
SCALE:NTS

IRRIGATION NOTES

1. CLEANLY CUT, CAP AND RECORD LOCATION OF ALL PIPE SCHEDULED TO REMAIN.
2. PROVIDE SPARE WIRES AT ENDS OF MAINLINE AS INDICATED ON PLAN. LOOP SPARES THROUGH EACH INTERMEDIATE VAULT BACK TO CONTROLLER. LABEL ALL WIRES AS THEY PASS THROUGH EACH VAULT. USE 3M-DBY WIRE CONNECTORS.
3. STAKE ALL VALVE BOX LOCATIONS FOR APPROVAL. PLAN IS DIAGRAMMATIC. NO VAULTS TO BE PLACED WITHIN TURF AREAS OR PLAYFIELDS. SET VALVE BOXES SQUARE TO ADJACENT BUILDING, CURB, OR PAVING.
4. ALL IRRIGATION UNDER BUILDINGS, ROADS, WALKS, PARKING AREAS OR OTHER PAVED SURFACES SHALL BE SLEEVED. SLEEVES SHALL BE 1-1/2 TIMES THE DIAMETER OF THE INSERT PIPE, 6" MINIMUM, OR AS INDICATED. SLEEVING MAY BE INCLUDED FOR FUTURE WORK.
5. ALL PIPE SHOWN UNDER PAVING ADJACENT AND PARALLEL TO PLANTED AREAS IS INTENDED TO BE PLACED IN THAT AREA WHERE POSSIBLE. ALL MATERIAL TO BE INSTALLED ON OWNERS PROPERTY.
6. MAKE ANY AND ALL REQUIRED ADJUSTMENTS TO THE IRRIGATION PLAN TO ASSURE COMPLETE AND ADEQUATE COVERAGE WITH MINIMUM OVERSPRAY.
7. LATERAL LINE SHALL HAVE 18" OF COVER, AND MAIN LINES 24". 30" MAXIMUM COVER.
8. REFER TO PLANTING PLAN FOR EXACT LAYOUT. INTENT IS THAT ALL NEW PLANTINGS RECEIVE ADEQUATE WATER.
9. CONTRACTOR SHALL NOT OPERATE PUMP AT FLOWS LESS THAN 25 GPM. NO QUICK COUPLERS ON LAKE WATER LINES.
10. NO PIPING IS PERMITTED UNLESS WATER SUPPLY IS ACTIVE AND AVAILABLE. DRIP ZONE SHALL ALWAYS BE RUN CONCURRENTLY WITH ANOTHER ZONE.
11. USE VARIABLE ARC NOZZLES ONLY WHERE FIXED ARC NOZZLES ARE NOT SUFFICIENT.
12. SEE PROJECT SPECIFICATIONS FOR FURTHER INFORMATION DETAILS.
13. SALVAGE EXISTING CONTROLLER AND CONTROL VALVES AND RETURN TO OWNER.

NOTES:
1. DO NOT ALLOW VAULT TO REST ON PIPE.
2. ALL PIPE WITHIN VAULT TO BE SCH 80 PVC NIPPLES, SAME SIZE AS CONTROL VALVE.
3. ALL BOLT COVERS TO BE LOCKING TYPE, BOLT INSTALLED.

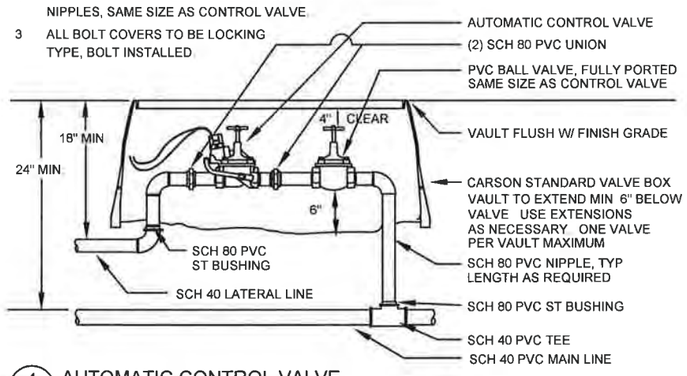

4 / I-1.1 AUTOMATIC CONTROL VALVE
SCALE:NTS

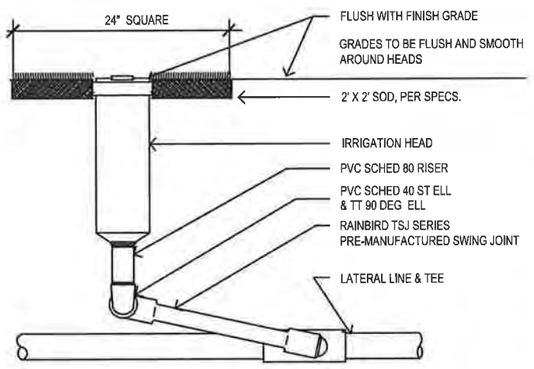

5 / I-1.1 POP-UP TURF ROTOR
SCALE:NTS

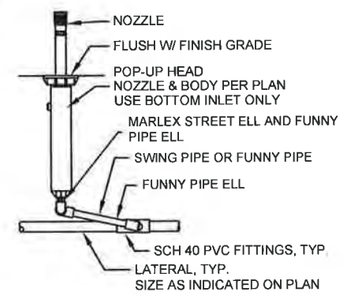

6 / I-1.1 POP-UP SPRAY HEAD
SCALE:NTS

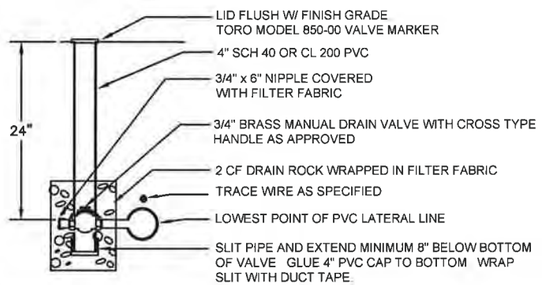

7 / I-1.1 MANUAL DRAIN VALVE
SCALE:NTS

COK PW Dept
Approved Construction Plans For
LSM20-06180
Jamie Ward
4/2/2021

PERMIT SET

ONE INCH
AT FULL SIZE, IF NOT ONE INCH SCALE ACCORDINGLY

ANCHOR QEA

CITY OF KIRKLAND WASHINGTON
123 Fifth Ave
Kirkland, WA 98033
(425) 587-3300

STATE OF WASHINGTON ANNA HOOK SPOONER NO. 245 EXP 06/30/2021 LICENSED LANDSCAPE ARCHITECT

REVISIONS				
REV	DATE	BY	APP'D	DESCRIPTION

DESIGNED BY: W. STEWART
DRAWN BY: C. WEE/C. HEWETT
CHECKED BY: P. HUMMEL
APPROVED BY: P. HUMMEL
SCALE: AS SHOWN
DATE: JUNE 2020

DAVID E. BRINK PARK SHORELINE RENOVATION

IRRIGATION DETAILS

I-2.1

SHEET # 33 OF 37

K:\Projects\1005-City of Kirkland\David Brink Park Shoreline Renovation\Construction Plans\1005-PL-Irrigation.dwg I-2.1 IRRIGATION DETAILS
Sep 01, 2020 3:18pm cwee

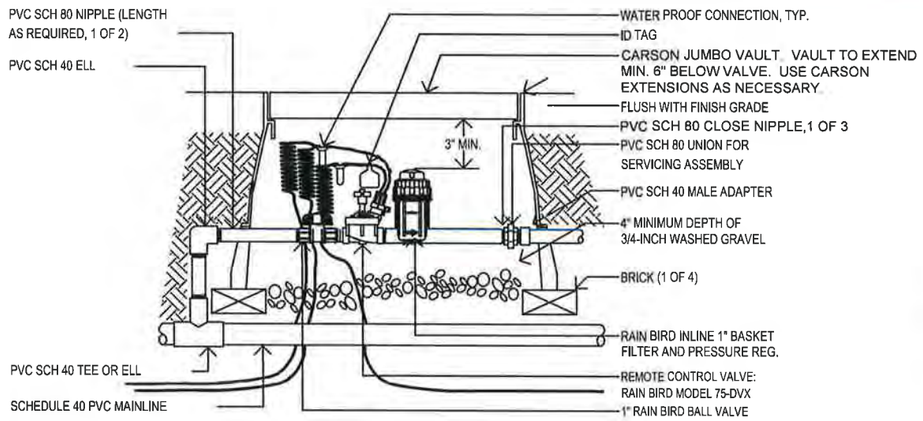

1 I-1.1 DRIP CONTROL VALVE
SCALE:NTS

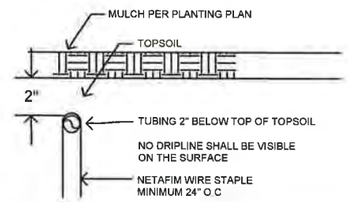

2 I-1.1 DRIPPER LINE SECTION
SCALE:NTS

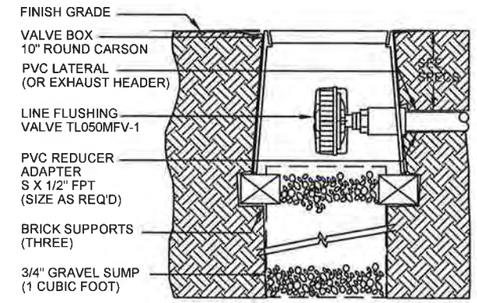

3 I-1.1 DRIP FLUSH VALVE
SCALE:NTS

COK PW Dept
Approved Construction Plans For
LSM20-06180
Jamie Ward
4/2/2021

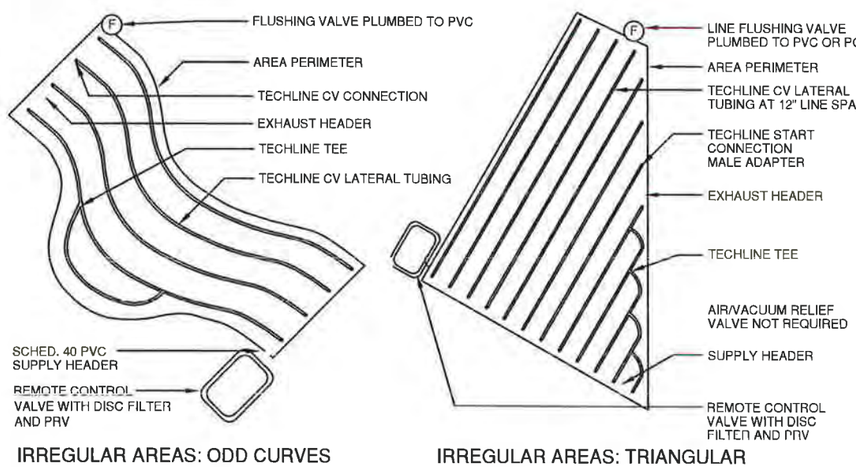

4 I-1.1 TYPICAL DRIP LAYOUTS
SCALE:NTS

EQUIPMENT LEGEND

SYMBOL	DESCRIPTION	PSI	RADIUS
	HUNTER PROS-XX-CV 8' SERIES NOZZLES AND LAVENDER CAP	30	8'
	HUNTER PROS-XX-CV 10' SERIES NOZZLES AND LAVENDER CAP	30	10'
	HUNTER PROS-XX-CV 12' SERIES NOZZLES AND LAVENDER CAP	30	12'
	HUNTER PROS-XX-CV 15' SERIES NOZZLES AND LAVENDER CAP	30	15'
	HUNTER PROS-XX-CV STRIP SERIES NOZZLES AND LAVENDER CAP	30	4x15', 4x30'
	HUNTER I-20-06-SS-R PART CIRCLE TURF ROTOR, Q=3, T=4, H=6, TT=8 NOZZLES WITH PURPLE COVER	50	40'
	HUNTER I-20-06-SS-R FULL CIRCLE TURF ROTOR #6 NOZZLES WITH PURPLE COVER	50	40'
	POINT OF CONNECTION TO EXISTING LAKE PUMP SYSTEM		
	AUTOMATIC CONTROL VALVE - WEATHERMATIC 8200CR SERIES BRASS, SIZE PER VALVE KEY		
	QUICK COUPLER VALVE - RAIN BIRD MODEL 44-LRC		
C	CONTROLLER - CALSENSE MODEL CS-3000 TO REPLACE EXISTING (NOT SHOWN)		
	EXISTING LAKE IRRIGATION PUMP TO REMAIN (NOT SHOWN)		
	MANUAL DRAIN VALVE, ONE PER ZONE		
	2" SCHEDULE 40 PVC MAIN LINE, PURPLE FOR NON-POTABLE WATER		
	1½" SCHEDULE 40 PVC MAIN LINE, PURPLE FOR NON-POTABLE WATER		
	SCHEDULE 40 PVC LATERAL LINE, SIZE AS INDICATED. MINIMUM 1" SIZE. NO ½" OR ¾" PIPE		
	6" CLASS 200 PVC SLEEVE		
NOT SHOWN	14 AWG TYPE UF CONTROL WIRE, RED = SIGNAL, WHITE = COMMON, YELLOW = SPARE		

USE HUNTER PROSPRAY 6" POP-UPS IN TURF AREAS, AND 12" IN ALL SHRUB AND GROUND COVER AREAS.
FOR MP ROTATOR NOZZLES, USE HUNTER PROS-PRS40-CV 6" BODIES IN TURF AREAS.

ONE INCH
AT FULL SIZE, IF NOT ONE INCH SCALE ACCORDINGLY

PERMIT SET

ANCHOR QEA
CITY OF KIRKLAND WASHINGTON
123 Fifth Ave
Kirkland, WA 98033
(425) 587-3300
STATE OF WASHINGTON ANNA HOOK SPOONER LICENSED LANDSCAPE ARCHITECT

REVISIONS

REV	DATE	BY	APP'D	DESCRIPTION

DESIGNED BY: W. STEWART
DRAWN BY: C. WEE/C. HEWETT
CHECKED BY: P. HUMMEL
APPROVED BY: P. HUMMEL
SCALE: AS SHOWN
DATE: JUNE 2020

DAVID E. BRINK PARK SHORELINE RENOVATION

IRRIGATION DETAILS

I-2.2

Sep 01, 2020 3:19pm cwee K:\Projects\11006-City of Kirkland\David Brink Park Shoreline Renovation\Construction Plans\11006_PL_irrigation.dwg I-2.2 IRRIGATION DETAILS

PLANT SCHEDULE

SYMBOL	COMMON NAME	SPECIES NAME	SIZE	SPACING	QUANTITY	REMARKS
TREES						
	Vine Maple	Acer circinatum	1.5" caliper	As Shown		1 L-2
	Eastern Redbud	Cercis canadensis	1.5" caliper	As Shown		
	Strawberry Tree	Arbutus unedo	1.5" caliper	As Shown		
	Shore Pine	pinus contorta	5-6' height	As Shown		2 L-2
	Dappled Willow	Salix integra 'hakuro nishiki'	1.5" caliper	As Shown		
NATIVE GROUNDCOVERS AND SHRUBS - SHADE						
GASH	Salal	Gaultheria shallon	2 gallon	3' O.C.		EQUAL MIX OF SPECIES 3 L-2, 4 L-2
MANE	Low Oregon Grape	Mahonia nervosa	2 gallon	3' O.C.		
POMU	Sword Fern	Polystichum munitum	1 gallon	3' O.C.		
TRGR	Trillium	Trillium grandiflorum	1 gallon	2' O.C.		
NATIVE GROUNDCOVERS AND SHRUBS - SUN						
FRCH	Common Strawberry	Fragaria chileonsis	4" pot	1' O.C.		EQUAL MIX OF SPECIES 3 L-2, 4 L-2
SYAL	Snowberry	Symphoricarpos albus	1 gallon	4' O.C.		
RONU	Nootka Rose	Rosa nutkana	1 gallon	2' O.C.		
ARUV	Kinnickinnick	Arctostaphylos uva-ursi	4" pot	1' O.C.		
ORNAMENTAL GRASSES AND PERENNIALS						
ELGL	Blue Wildrye	Elymus glaucus	1 gallon	2' O.C.		4 L-2
DECE	Tufted Hairgrass	Deschampsia cespitosa	1 gallon	2' O.C.		
BRUSH LAYERING PLANTING						
	Red Osier Dogwood	Cornus sericea	livestake	See remarks		REFER TO DETAIL 11/CM-3 FOR INSTALL DETAILS AND NOTES. 11 CM-3
	Hookers willow	Salix hookeriana	livestake			
	Scoulers willow	Salix scouleriana	livestake			
	LAWN HYDROSEED					

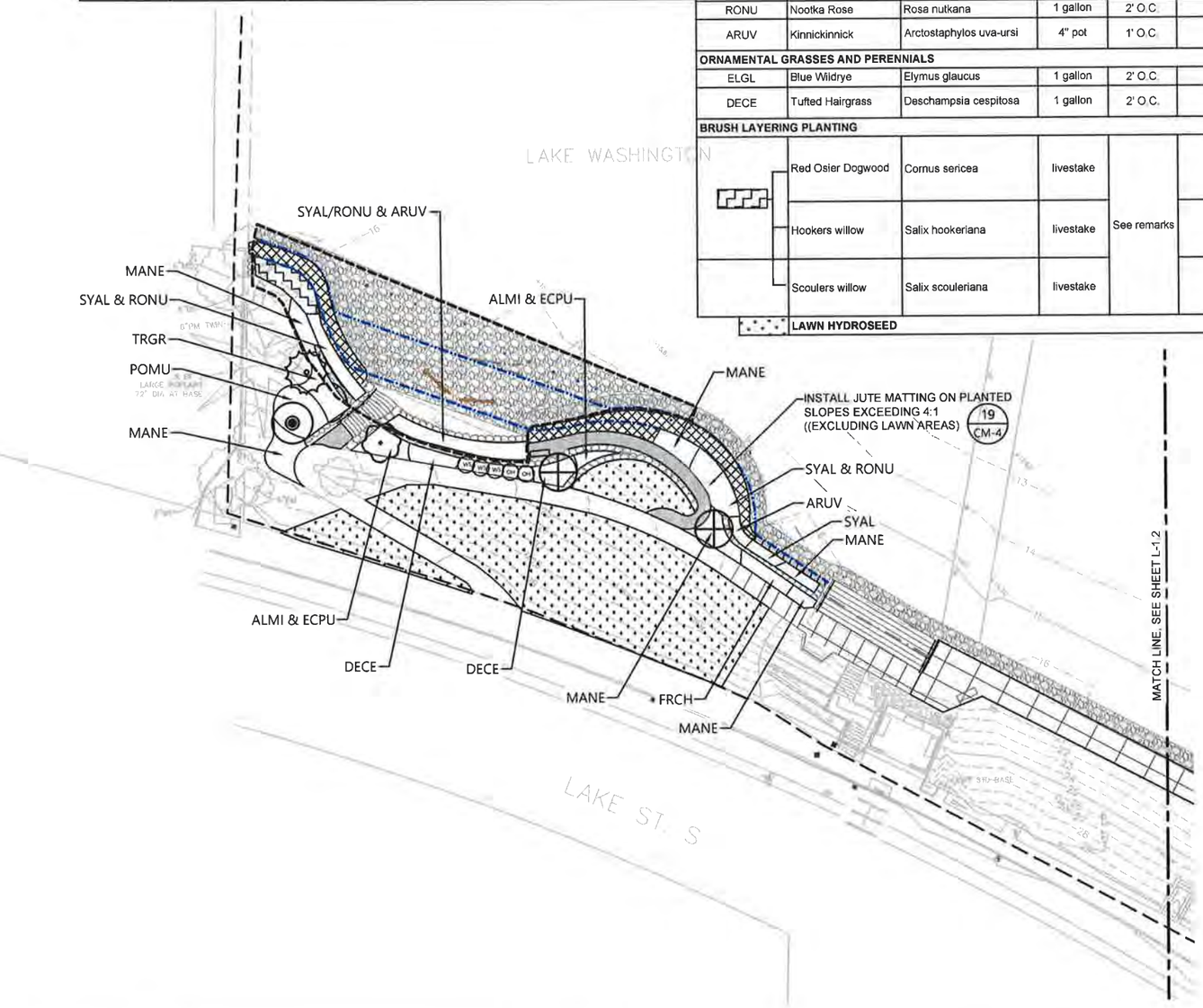

0 20 40
SCALE IN FEET

LEGEND:

- PARK BOUNDARY
- PROJECT LIMITS
- EXISTING CONTOUR
- EXISTING ORDINARY HIGH WATER MARK (OHWM)
- EXISTING ORDINARY LOW WATER MARK (OLWM)
- EXISTING TREE
- PROPOSED CONTOUR
- PROPOSED OHWM
- PROPOSED OLWM
- PROPOSED CONCRETE VIEWPOINT PATHWAY
- PROPOSED BEACH SAND
- PROPOSED HABITAT GRAVEL
- PROPOSED ROCK REVETMENT
- PROPOSED BASALT ROCK TERRACE
- PROPOSED BENCH
- EXISTING BENCH TO REMAIN
- PROPOSED DRIFTWOOD WITH ROOTWADS
- LAWN RESTORATION AREA
- ENHANCEMENT AREA

COK PW Dept
Approved Construction Plans For
LSM20-06180
Jamie Ward
4/2/2021

NOTES:

1. HORIZONTAL DATUM: WASHINGTON STATE PLANE NORTH ZONE, NORTH AMERICAN DATUM OF 1983 (NAD83), U.S. SURVEY FEET
2. VERTICAL DATUM: NAVD 88
3. SURVEY PROVIDED BY STANTEC, INC IN MARCH 2019
4. INSTALL JUTE FABRIC IN ALL PLANTING AREAS (EXCLUDING LAWN HYDROSEED PANTING AREAS) WITH SLOPES EXCEEDING 4:1. REFER TO DETAIL 18 ON CM-4 FOR INSTALLATION DETAILS.

ONE INCH
AT FULL SIZE, IF NOT ONE INCH SCALE ACCORDINGLY

PERMIT SET

K:\Projects\1006-City of Kirkland\David Brink Park Shoreline Renovation\Construction Plans\1006-PL-Planting Plan.dwg L-1.1 PLANTING PLAN
Sep 01, 2020 3:19pm cwee

ANCHOR QEA

CITY OF KIRKLAND WASHINGTON

123 Fifth Ave
Kirkland, WA 98033
(425) 587-3300

STATE OF WASHINGTON ANNA HOOK SPOONER NO. 2445 EXP. 06/18/2021 LICENSED LANDSCAPE ARCHITECT

REVISIONS

REV	DATE	BY	APP'D	DESCRIPTION

DESIGNED BY: A. SPOONER
DRAWN BY: C. WEE/C. HEWETT
CHECKED BY: P. HUMMEL
APPROVED BY: P. HUMMEL
SCALE: AS SHOWN
DATE: JUNE 2020

DAVID E. BRINK PARK SHORELINE RENOVATION

PLANTING PLAN - SOUTH

L-1.1

SHEET # 35 OF 37

PLANT SCHEDULE

SYMBOL	COMMON NAME	SPECIES NAME	SIZE	SPACING	QUANTITY	REMARKS
TREES						
	Serviceberry	Amelanchier alnifolia	1.5" caliper	As Shown		
	Eastern Redbud	Cercis canadensis	1.5" caliper	As Shown		
	Shore Pine	pinus contorta	5-6' height	As Shown		
NATIVE GROUNDCOVERS AND SHRUBS - SHADE						
GASH	Salal	Gaultheria shallon	2 gallon	3' O.C.		EQUAL MIX OF SPECIES
MANE	Low Oregon Grape	Mahonia nervosa	2 gallon	3' O.C.		
POMU	Sword Fern	Polystichum munitum	1 gallon	3' O.C.		
NATIVE GROUNDCOVERS AND SHRUBS - SUN						
ORNAMENTAL SHRUBS, GRASSES AND PERENNIALS						
ALMI	Ornamental Onion	Allium 'Millennium'	Bulb			EQUAL MIX OF SPECIES
ECPU	Purple Coneflower	Echinacea purpurea	1 gallon	2' O.C.		
ELGL	Blue Wildrye	Elymus glaucus	1 gallon	2' O.C.		
DECE	Tufted Hairgrass	Deschampsia cespitosa	1 gallon	2' O.C.		
OH	Oakleaf hydrangea	Hydrangea quercifolia	1 gallon	5' O.C		
RR	White rock rose	Cistus hybridus	1 gallon	5' O.C.		
WS	White Spirea	Spiraea betulifolia var lucida	2 gallon	5' O.C.		

EMERGENT PLANTING

Chairmaker's bulrush	Scirpus americanus	10" plug	2' O.C.		INSTALL AT AND BELOW OHWM
Lakeshore bulrush	Scirpus lacustris	10" plug			
Small-fruited bulrush	Scirpus microcarpus	10" plug			INSTALL ABOVE OHWM

LAWN HYDROSEED

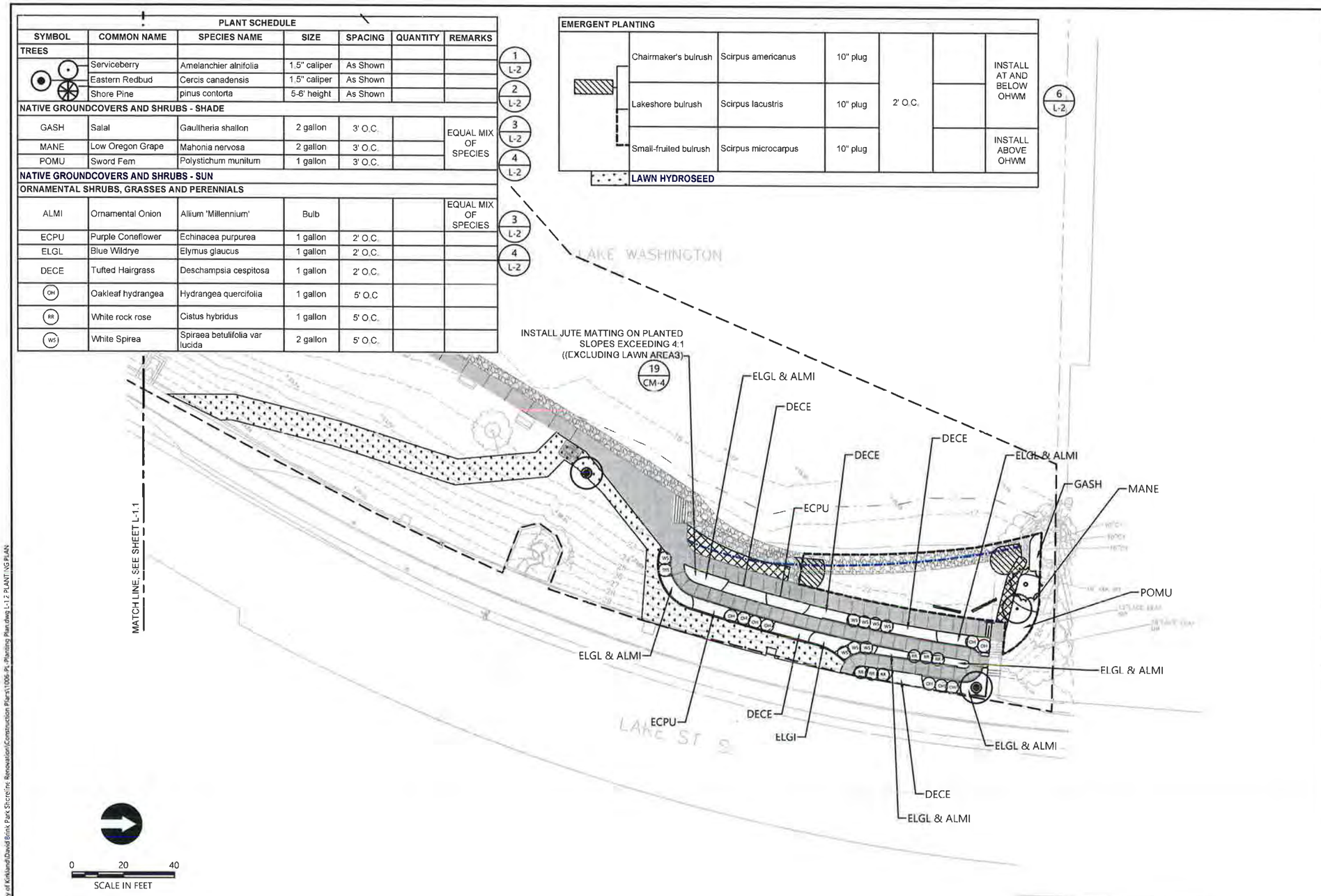

LEGEND:

- PARK BOUNDARY
- PROJECT LIMITS
- EXISTING CONTOUR
- EXISTING ORDINARY HIGH WATER MARK (OHWM)
- EXISTING ORDINARY LOW WATER MARK (OLWM)
- EXISTING TREE
- PROPOSED CONTOUR
- PROPOSED OHWM
- PROPOSED OLWM
- PROPOSED CONCRETE VIEWPOINT PATHWAY
- PROPOSED BEACH SAND
- PROPOSED HABITAT GRAVEL
- PROPOSED ROCK REVETMENT
- EXISTING BENCH TO REMAIN
- DRIFTWOOD
- TREES
- LAWN RESTORATION AREA
- ENHANCEMENT AREA

COK PW Dept
Approved Construction Plans For
LSM20-06180
Jamie Ward
4/2/2021

NOTES:

1. HORIZONTAL DATUM: WASHINGTON STATE PLANE NORTH ZONE, NORTH AMERICAN DATUM OF 1983 (NAD83), U.S. SURVEY FEET
2. VERTICAL DATUM: NAVD 88
3. SURVEY PROVIDED BY STANTEC, INC IN MARCH 2019
4. BW ELEVATIONS ARE TO FINISH GRADE

ONE INCH
AT FULL SIZE, IF NOT ONE INCH SCALE ACCORDINGLY

PERMIT SET

ANCHOR QEA

CITY OF KIRKLAND WASHINGTON
123 Fifth Ave
Kirkland, WA 98033
(425) 587-3300

STATE OF WASHINGTON ANN HOOK SPOONER NO. 945 EXP. 06/ 9/2021 LICENSED LANDSCAPE ARCHITECT

REVISIONS

REV	DATE	BY	APP'D	DESCRIPTION

DESIGNED BY: A SPOONER
DRAWN BY: C WEE/C HEWETT
CHECKED BY: P HUMMEL
APPROVED BY: P HUMMEL
SCALE: AS SHOWN
DATE: JUNE 2020

DAVID E. BRINK PARK SHORELINE RENOVATION

PLANTING PLAN - NORTH

L-1.2

SHEET # 36 OF 37

K:\Projects\11006 City of Kirkland\David Brink Park Shoreline Renovation\Construction Plans\11006-P1 Planting Plan.dwg L-1.2 PLANTING PLAN
Sep 01, 2020 3:19pm owee

COK PW Dept
Approved Construction Plans For
LSM20-06180
Jamie Ward
4/2/2021

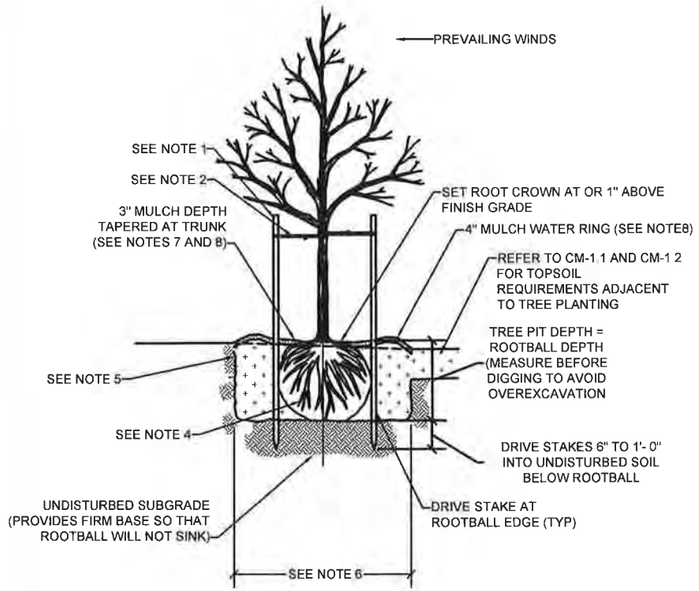

1 L-1.1 DECIDUOUS TREE PLANTING & STAKING
SCALE:NTS

NOTES:
1 STAKE TREES WITH (2) 2" DIAMETER (8'-0" LENGTH) LODGE POLE PINE OR DOUGLAS FIR STAKES
2 CHAINLOCK TREE TIE LOOP EACH TIE AROUND TREE LOOSELY TO PROVIDE 1" SLACK FOR DIAMETER GROWTH
3 ONE STAKE PER TREE ON WINDWARD SIDE; SECOND STAKE ON LEEWARD SIDE
4 REMOVE ALL WIRE, STRING, BURLAP, AND PLASTIC
5 SHAPE SOIL TO PROVIDE 5' DIAMETER OR TWO TIMES ROOTBALL DIAMETER, WHICHEVER IS GREATER, WATERING RING
6 ROUGHEN SIDES OF PLANTING HOLE MAXIMIZE EXCAVATED AREA WITHOUT UNDERMINING ADJACENT PAVING/CURB
7 MULCH AREA TO BE CLEAR OF GRASS, WEEDS, ETC TO REDUCE COMPETITION WITH TREE ROOTS
8 MULCH SHALL CONFORM TO WSDOT 9-14 5(8) FINE COMPOST AND SHALL BE BROWN IN COLOR

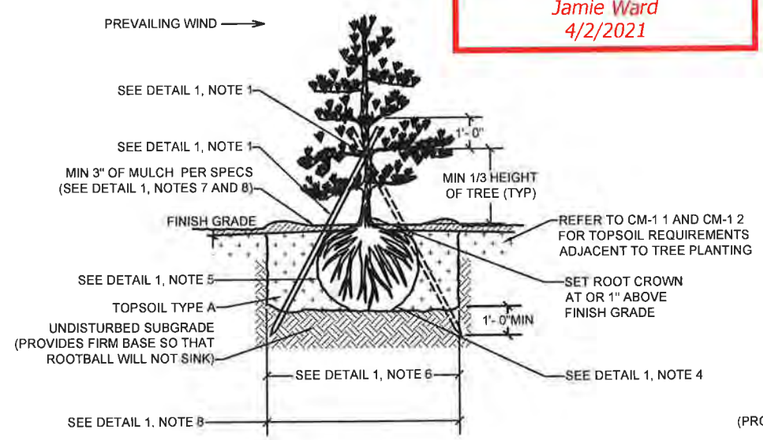

2 L-1.1 CONIFEROUS TREE PLANTING & STAKING
SCALE:NTS

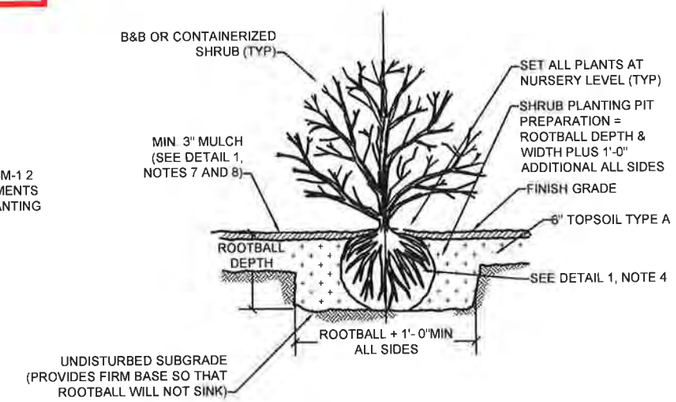

3 L-1.1 SHRUB PLANTING
SCALE:NTS

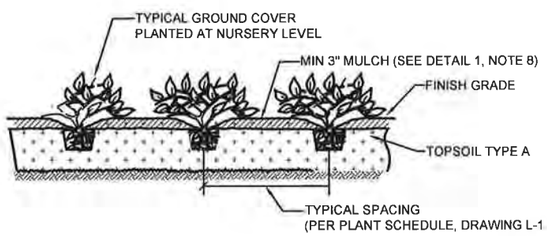

4 L-1.1 GROUNDCOVER, PERENNIAL, AND ORNAMENTAL GRASS PLANTING
SCALE:NTS

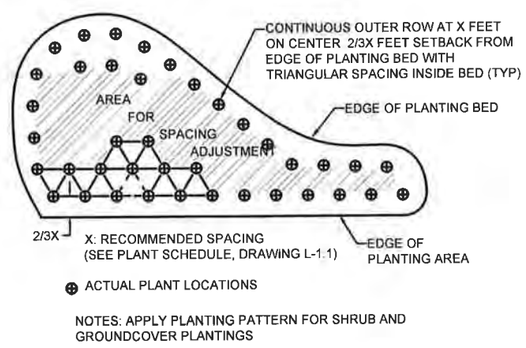

NOTES: APPLY PLANTING PATTERN FOR SHRUB AND GROUNDCOVER PLANTINGS

5 L-1.1 PLANTING PATTERN
SCALE:NTS

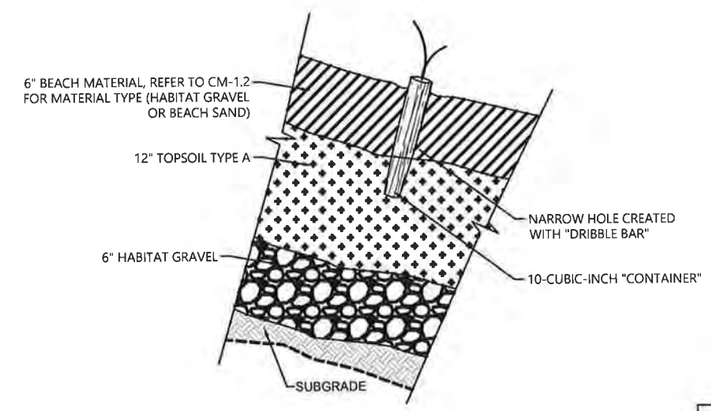

6 L-1.2 EMERGENT PLUG PLANTING DETAIL
SCALE NOT TO SCALE

ONE INCH
AT FULL SIZE, IF NOT ONE INCH SCALE ACCORDINGLY

PERMIT SET

ANCHOR QEA
CITY OF KIRKLAND WASHINGTON
123 Fifth Ave
Kirkland, WA 98033
(425) 587-3300
STATE OF WASHINGTON ANNA HOOK SPOONER NO. 645 EXP. 09/ 9/2021 LICENSED LANDSCAPE ARCHITECT

REVISIONS

REV	DATE	BY	APP'D	DESCRIPTION

DESIGNED BY: A. SPOONER
DRAWN BY: C. WEE/C. HEWETT
CHECKED BY: P. HUMMEL
APPROVED BY: P. HUMMEL
SCALE: AS SHOWN
DATE: JUNE 2020

DAVID E. BRINK PARK SHORELINE RENOVATION

PLANTING DETAILS

L-2

K:\Projects\1006-City of Kirkland\David Brink Park Shoreline Renovation\Construction Plans\1006-PL Planting Plan.dwg L-2 PLANTING DETAILS
Sep 01, 2020 3:19pm cwee

BUILDING PERMIT

City of Kirkland

BUILDING PERMIT

City of Kirkland
123 Fifth Avenue
Kirkland WA 98033
425-587-3600

Permit Number: BNR20-06182
Type: Building Non Residential - BNR
Work Class: Repair

BNR20-06182

Permit Information

Plans Location: Electronic

Job Address:	**Project:**		
555 LAKE ST S, none	**Parcel:** 0825059133	**Application Date:**	09/15/2020
	Valuation: $100,000.00	**Issue Date:**	03/31/2021
	Sprinklered:	**Expiration Date:**	09/30/2024
	Dwelling Units: 0	**Code Edition:**	2015 IBC

Scope of Work

DAVID BRINK PARK - Ground work such as adding and modifying stairs and retaining walls to the park and pier repair including additional structural support. (RE: LSM20-06180)

Contacts

Type	Name	Address	Phone
Owner	CITY OF KIRKLAND	123 5TH AVE KIRKLAND, WA 98033	B: 425-587-3000 C:
Primary Contact	BRIAN BAKER	6475 NE 135TH PL KIRKLAND, WA 98034	B: C: 425-820-7989
Applicant	MBP.COM MBP CONTACT 2020 V2	ONLINE PAYMENT ,	B: C:
Owner is Contractor	OWNER IS CONTRACTOR		B: C:

ELECTRONIC

General Conditions

1. The issuance of this permit shall not be construed to be a permit for, or an approval of, any violation of any of the provisions of this code or of any other ordinances of the jurisdiction.
2. The approved plans shall not be changed, modified, or altered without authorization from the building official.
3. This permit, inspection record and approved plans are required to be on the job site at all times.
4. All development activity and heavy equipment operation is restricted to 7:00 a.m. to 8:00 p.m., Monday through Friday, and 9:00 a.m. to 6:00 on Saturdays. No development activity or heavy equipment operation may occur on Sundays or holidays observed by the City.
5. All work is subject to field inspection. Do not cover any work until approved by a City inspector.
6. Inspection(s) required - Schedule on **http://MyBuildingPermit.com**
7. Contact the Building Division at 425-587-3600 with any questions.

555 LAKE ST S, 1, NONE

SEE ATTACHED SHEET FOR SPECIFIC CONDITIONS

The City approved plans, permit and inspection record must remain on the job site for use by City inspection personnel.
Any sales tax reported to the State in association with this project should be coded to the City of Kirkland tax location code 1716.
I certify that the information furnished by me is true and correct to the best of my knowledge and the applicable City of Kirkland requirements will be met.

☐ Owner or ☐ Agent _____ _____
(Check one) (Print Name) Date

_____
(Signature)

City of Kirkland
123 5th Avenue
Kirkland, WA 98033
425-587-3600

SPECIFIC PERMIT CONDITIONS

BUILDING ADDRESS	PERMIT NUMBER	PERMIT TYPE / WORK CLASS	DATE PRINTED
555 LAKE ST S, #none	BNR20-06182	Building Non Residential - BNR / Repair	2/11/2021

DESCRIPTION OF WORK:
DAVID BRINK PARK - Ground work such as adding and modifying stairs and retaining walls to the park and pier repair including additional structural support.
(RE: LSM20-06180)

Building Department Conditions:

BLDG. DEPT. CONDITIONS
Related to LSM20-06180
SEE APPROVED PLANS - See approved plans for balance of Building Department comments.

SCOPE OF WORK - Changes to the scope of work, design, materials or method of construction will require revised plans to be submitted. The plans must be reviewed and approved by City of Kirkland review staff prior to being implemented in the field. Additional review fees will be charges as applicable.

INSPECTIONS REQUIRED; WHEN TO COVER - See permit for how to schedule inspections. All building elements and each layer of construction must be inspected prior to cover. Photos are not a substitute for inspections. It is possible that un-needed inspections are listed on your permit. Please call only for the inspections you need and ask your inspector which apply if you are not sure.

SEPARATE PERMITS - Separate permits are required for any work in the following categories:

Additions, repairs or modifications beyond original scope
Electrical
Plumbing
Signs

Fire Department Conditions:

Fire has no comments.

Planning Department Conditions:

PLANNING CONDITIONS - Contact: Jennifer Anderer, 425.587.3239

PCD 1. REVISED SITE PLAN - Any proposed changes to the approved site plan must be submitted as a revision to the building permit for review and approval prior to implementation.
PCD 2. ALL - HOURS OF CONSTRUCTION - All development activity and heavy equipment operation is restricted to 7:00 a.m. to 8:00 p.m. Monday through Friday, and 9:00 a.m. to 6:00 p.m. Saturday. Other restrictions on Saturday include: no working in the right-of-way, no work requiring inspection, and no trucking into or out of the site; however, light grading work on-site on Saturday is allowed. NO development activity or heavy equipment operation may occur on Sundays or the following holidays: New Year's Day, Memorial Day, Independence Day, Labor Day, Thanksgiving Day, and Christmas Day.
PCD 3. MAXIMUM NOISE LEVELS - All mechanical units shall comply with the maximum environmental noise levels established pursuant to the Noise Control Act of 1974, Revised Code of Washington (RCW) 70.107. See Chapter 173-60 Washington Administrative Code (WAC). A link to the WAC and RCW is available at www.kirklandpermits.net.

Public Works Department Conditions:

SEE LSM20-06180 FOR CONDITIONS

City of Kirkland
123 5th Avenue
Kirkland, WA 98033

INSPECTION RECORD - THIS CARD MUST BE POSTED ON SITE

Schedule an inspection by 6:00 PM for next day inspections
Schedule online at: **www.MyBuildingPermit.com**

Permit #: **BNR20-06182**

How to request an inspection:
1) Go to **http://www.MyBuildingPermit.com**
2) Select Kirkland as the Jurisdiction.
3) Select Permit Number or Address.
4) Follow the on-screen instructions.

BUILDING ADDRESS	PARCEL NUMBER	DATE PRINTED	PERMIT TYPE	WORKCLASS	SQ FT	VALUATION
555 LAKE STS , NONE	0825059133	2/11/21	Building Non Residential - BNR	Repair	0	$100,000.00

REQUIRED INSPECTIONS - DO NOT COVER ANY WORK PRIOR TO INSPECTION

	Inspection	IVR	Date	Insp	Inspection	IVR	Date	Insp
1	BLD - Piles	202						
2	BLD - Footings/Setback/UFER	210						
3	BLD - Foundation Walls	212						
4	BLD - Footing Perimeter Drains	209						
5	BLD - Framing	250						
6	BLD - Inspection	293						
7	BLD - Other	201						
8	BLD - Final	295						

* Note: 1st erosion control inspection is required prior to any excavation. * 2nd erosion control inspection is required after foundation backfill.
(These erosion control inspections only apply if they are listed on the above checklist)

Departmental staff: BLD is Building Dept, PW is Public Works Dept, PCD is Planning Dept, and FIR is Fire Dept

NOTE: THIS INSPECTION RECORD IS THE CERTIFICATE OF OCCUPANCY WHEN THE BUILDING FINAL INSPECTION HAS BEEN APPROVED

Inspector's Comments

City of Kirkland
Reviewed by T Elder
02/10/2021

THIS APPROVED PLAN SET MUST REMAIN ON SITE.

Special Inspections required.

PCD APPROVED SITE PLAN

Any proposed changes to the approved site plan, such as but not limited to added hard surfaces, HVAC units, tree removals and accessory structures, must be submitted to the Building Department as a revision to the building permit for review and approval, and conformance prior to implementation.

WORK MUST MATCH APPROVED SHR20-00202 PLANS. ANY CHANGES MUST BE RESUBMITTED TO THE PLANNING DEPARTMENT FOR REVIEW.

Composite Site Plan taken from LSM20-06180 for reference only.

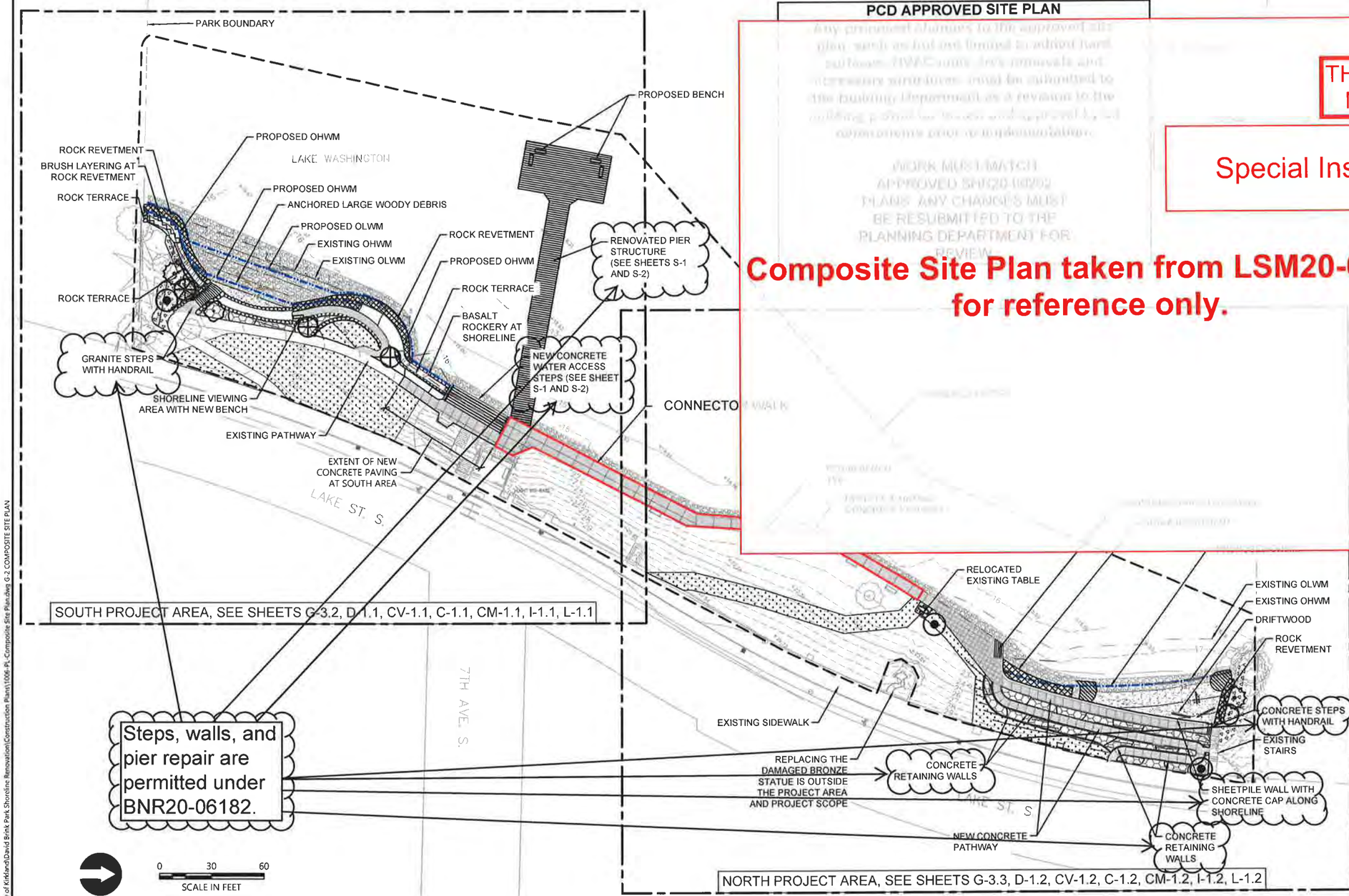

LEGEND:

- PARK BOUNDARY
- PROJECT LIMITS
- EXISTING TREE
- PROPOSED CONCRETE PATHWAY
- PROPOSED CONCRETE PATHWAY WITH DECORATIVE PAVING
- EXISTING CONCRETE PATHWAY SURFACE REPAIR AREA
- CONCRETE SEATWALL
- PIER GRATING
- BEACH SAND
- HABITAT GRAVEL
- COBBLE UNDERLAYMENT
- BASALT ROCKERY AT SHORELINE
- BASALT ROCK TERRACE (MAX 29" EXPOSED HEIGHT)
- ROCK REVETMENT (2:1 SLOPE MAX)
- BRUSH LAYERING AT ROCK REVETMENT
- NATIVE GROUNDCOVERS AND LOW SHRUBS - SHADE
- NATIVE GROUNDCOVERS AND LOW SHRUBS - SUN
- ORNAMENTAL GROUNDCOVERS AND PERENNIALS
- TREES
- LAWN RESTORATION AREA
- PROPOSED BENCH
- EXISTING BENCH TO REMAIN
- EXISTING PICNIC TABLE SALVAGED AND RELOCATED ON-SITE
- DRIFTWOOD WITH ROOTWADS
- DRIFTWOOD
- CONNECTOR WALK

NOTES:

1. HORIZONTAL DATUM: WASHINGTON STATE PLANE NORTH ZONE, NORTH AMERICAN DATUM OF 1983 (NAD83), U.S. SURVEY FEET
2. VERTICAL DATUM: NAVD 88
3. SURVEY PROVIDED BY STANTEC, INC IN MARCH 2019

ONE INCH
AT FULL SIZE, IF NOT ONE INCH SCALE ACCORDINGLY

PERMIT SET

K:\Projects\1006-City of Kirkland\David Brink Park Shoreline Renovation\Construction Plans\1006-PL-Composite Site Plan.dwg G-2 COMPOSITE SITE PLAN
Sep 01, 2020 3:12pm cwee

ANCHOR QEA

CITY OF KIRKLAND WASHINGTON
123 Fifth Ave
Kirkland, WA 98033
(425) 587-3300

STATE OF WASHINGTON ANNA HOOK SPOONER NO. 545 EXP. 06/ 6/2021 LICENSED LANDSCAPE ARCHITECT

REVISIONS				
REV	DATE	BY	APP'D	DESCRIPTION

DESIGNED BY: A. SPOONER
DRAWN BY: C. WEE/C. HEWETT
CHECKED BY: P. HUMMEL
APPROVED BY: P. HUMMEL
SCALE: AS SHOWN
DATE: JUNE 2020

DAVID E. BRINK PARK SHORELINE RENOVATION

COMPOSITE SITE PLAN

G-2
BNR20-06182
Page 1 of 12
SHEET # 2 OF 37

City of Kirkland
Reviewed by T Elder
02/10/2021

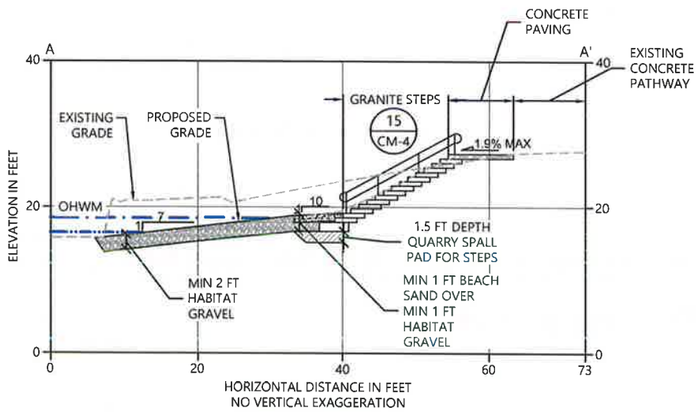

A C-1.1 SECTION A
SCALE: 1" = 10'

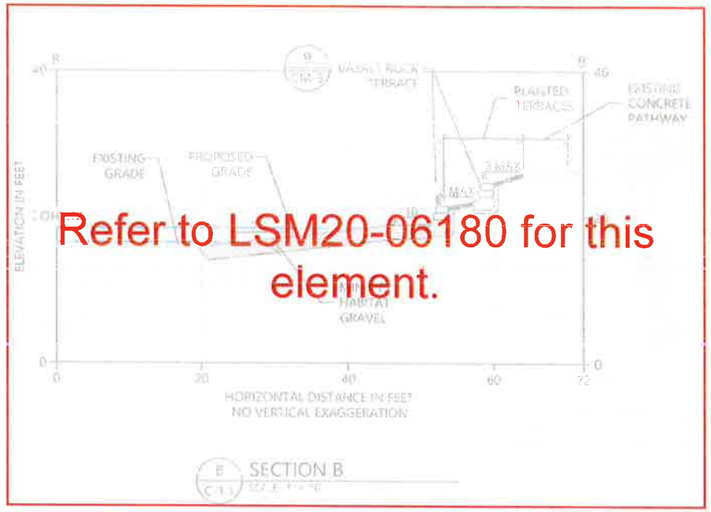

E C-1.1 SECTION B

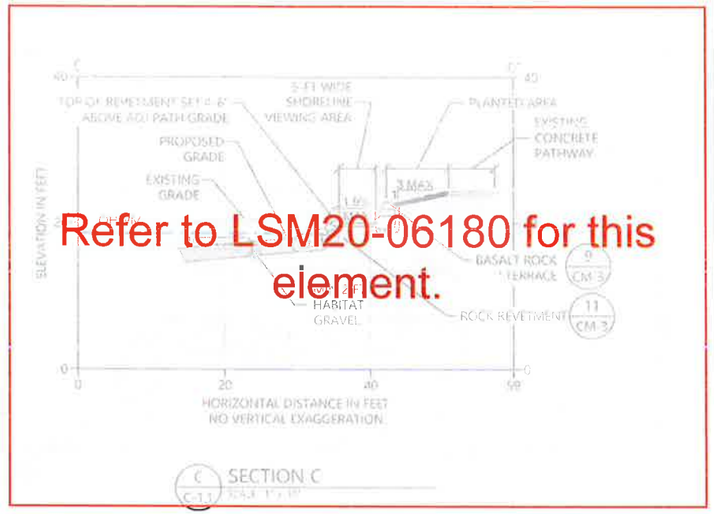

C C-1.1 SECTION C

Refer to LSM20-06180 for this element.

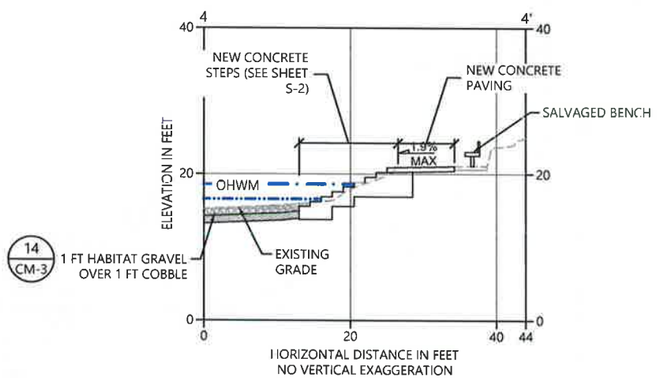

E C-1.1 SECTION E
SCALE: 1" = 10'

LEGEND:
- EXISTING GRADE
- PROPOSED GRADE
- OHWM 18.67 NAVD88
- OLWM 16.67 NAVD88
- HABITAT GRAVEL
- COBBLE
- BEACH SAND
- FILTER LAYER

0 10 20
SCALE IN FEET

NOTES:

1. HORIZONTAL DATUM: WASHINGTON STATE PLANE NORTH ZONE, NORTH AMERICAN DATUM OF 1983 (NAD83), U.S. SURVEY FEET
2. VERTICAL DATUM: NAVD 88
3. SURVEY PROVIDED BY STANTEC, INC IN MARCH 2019

Please reference LSM20-06180 for the total drawing set. The attached details/sheets are for review under BNR20-06182

ONE INCH
AT FULL SIZE, IF NOT ONE INCH SCALE ACCORDINGLY

PERMIT SET

ANCHOR QEA

CITY OF KIRKLAND WASHINGTON
123 Fifth Ave
Kirkland, WA 98033
(425) 587-3300

DAVID W. RICE STATE OF WASHINGTON 40265 REGISTERED PROFESSIONAL ENGINEER

REVISIONS				
REV	DATE	BY	APP'D	DESCRIPTION

DESIGNED BY: A. SPOONER
DRAWN BY: C. WEE/C. HEWETT
CHECKED BY: P. HUMMEL
APPROVED BY: P. HUMMEL
SCALE: AS SHOWN
DATE: JUNE 2020

DAVID E. BRINK PARK SHORELINE RENOVATION

GRADING AND MATERIALS SECTIONS (1 OF 2)

C-2
BNR20-06182
Page 2 of 12
SHEET # 17 OF 37

K:\Projects\1006-City of Kirkland\David Brink Park Shoreline Renovation\Construction Plans\1006-PL-Grading Plan.dwg C-2 GRADING AND MATERIALS SECTIONS
Sep 01, 2020 3:16pm cwee

City of Kirkland
Reviewed by T Elder
02/10/2021

LEGEND:
- EXISTING
- PROPOSED GRADE
- OHWM 18 67 NAVD88
- OLWM 16 67 NAVD88
- HABITAT GRAVEL
- COBBLE
- BEACH SAND
- FILTER LAYER
- TOPSOIL

0 10 20
SCALE IN FEET

Refer to LSM20-06180 for this element.

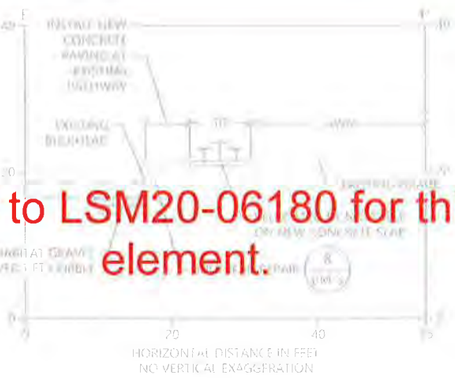

F C-1.2 SECTION F

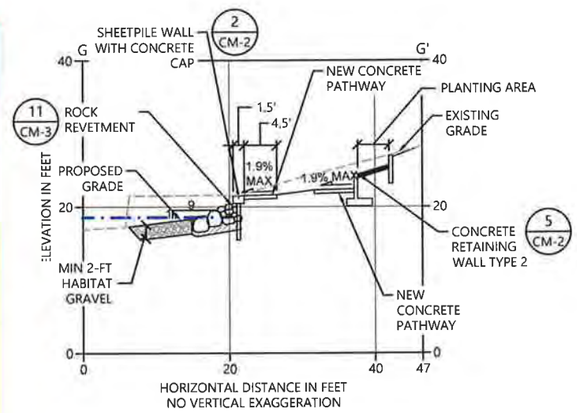

G C-1.2 SECTION G
SCALE: 1" = 10'

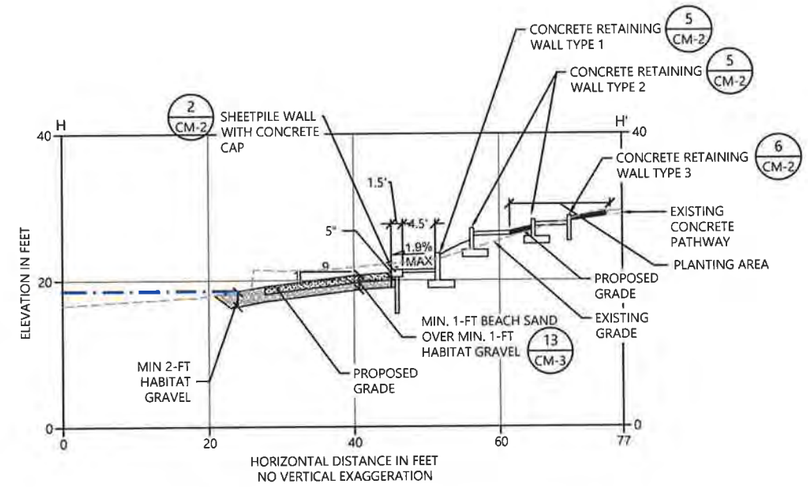

H C-1.2 SECTION H
SCALE: 1" = 10'

NOTES:

1. HORIZONTAL DATUM: WASHINGTON STATE PLANE NORTH ZONE, NORTH AMERICAN DATUM OF 1983 (NAD83), U.S. SURVEY FEET
2. VERTICAL DATUM: NAVD 88
3. SURVEY PROVIDED BY STANTEC, INC IN MARCH 2019

ONE INCH
AT FULL SIZE, IF NOT ONE INCH SCALE ACCORDINGLY

PERMIT SET

ANCHOR QEA

CITY OF KIRKLAND WASHINGTON
123 Fifth Ave
Kirkland, WA 98033
(425) 587-3300

DAVID W. RICE
STATE OF WASHINGTON
40265
REGISTERED PROFESSIONAL ENGINEER

REVISIONS				
REV	DATE	BY	APP'D	DESCRIPTION

DESIGNED BY: A. SPOONER
DRAWN BY: C. WEE/C. HEWETT
CHECKED BY: P. HUMMEL
APPROVED BY: P. HUMMEL
SCALE: AS SHOWN
DATE: JUNE 2020

DAVID E. BRINK PARK SHORELINE RENOVATION

GRADING AND MATERIALS SECTIONS (2 OF 2)

C-3
BNR20-06182
Page 3 of 12
SHEET # 18 OF 37

K:\Projects\1006-City of Kirkland\David Brink Park Shoreline Renovation\Construction Plans\1006-PL-Grading Plan.dwg C-3 GRADING AND MATERIALS SECTIONS
Sep 01, 2020 3:16pm cwee

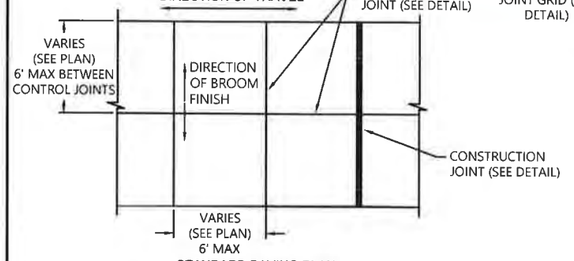

STANDARD PAVING PLAN

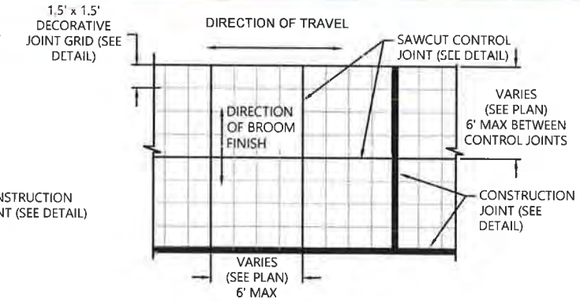

DECORATIVE PAVING PLAN

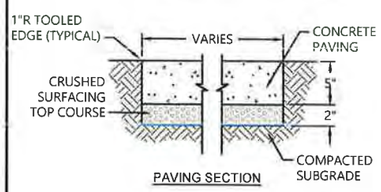

PAVING SECTION

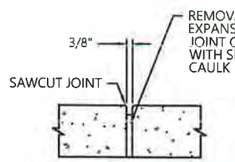

CONSTRUCTION JOINT DETAIL

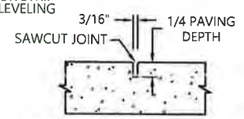

SAWCUT CONTROL JOINT DETAIL

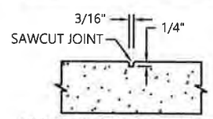

SAWCUT DECORATIVE JOINT DETAIL

NOTE: CONCRETE PAVING SHALL INCLUDE FIBERMESH PER SPECIFICATIONS.

1 CM-1.1 CONCRETE PAVING
SCALE: NOT TO SCALE

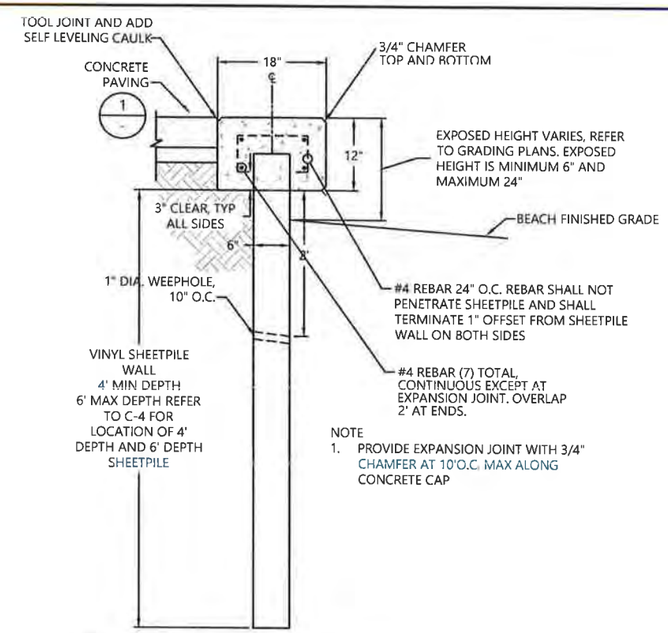

NOTE
1. PROVIDE EXPANSION JOINT WITH 3/4" CHAMFER AT 10'O.C. MAX ALONG CONCRETE CAP

2 CM-1.2 SHEETPILE WALL WITH CONCRETE CAP
SCALE: 1" = 1.0'

City of Kirkland
Reviewed by T Elder
02/10/2021

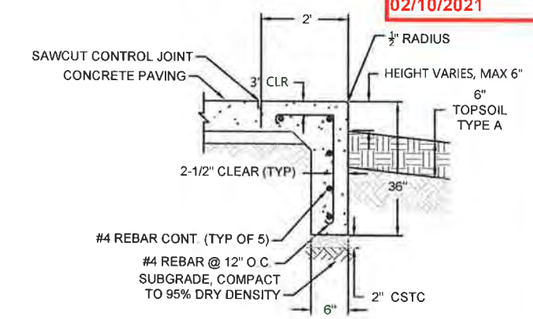

3 CM-1.1 CONCRETE PATHWAY WITH THICKENED EDGE
SCALE: 1" = 1.0'

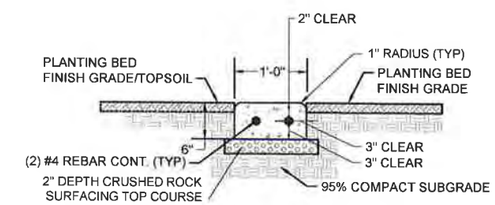

4 CM-1.2 CONCRETE MOW STRIP
SCALE: 1" = 1.0'

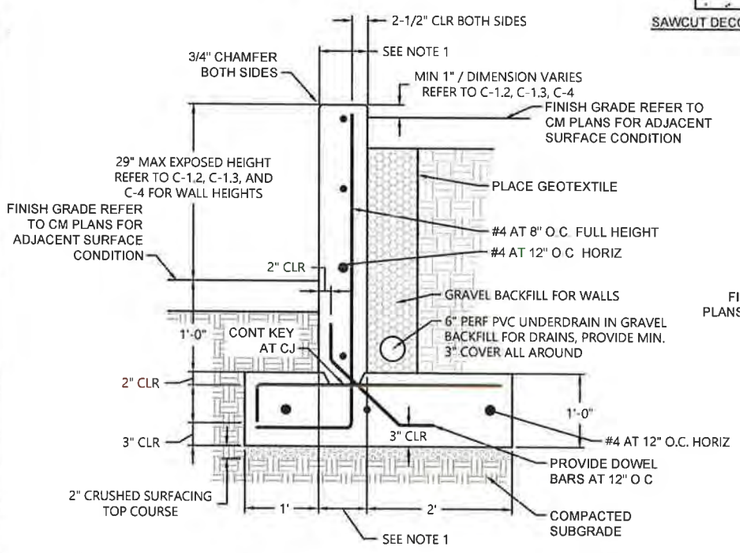

NOTES
1. TYPE 1 WALL WIDTH IS 8". TYPE 2 WALL WIDTH IS 6". REFER TO C-1.3 FOR WALL TYPE LOCATIONS.
2. PROVIDE EXPANSION JOINT WITH 3/4" CHAMFER AT 10'O.C. MAX.
3. WHEN CONCRETE RETAINING WALL IS ADJACENT TO CONCRETE PAVING, INSTALL PRE-MOLDED JOINT FILLER AT INTERFACE, USE SNAP LOCK FILLED WITH SIKA FLEX SELF-LEVELING CAULK.

5 C-1.2 CONCRETE RETAINING WALL TYPES 1 AND 2
SCALE: 1" = 1.0'

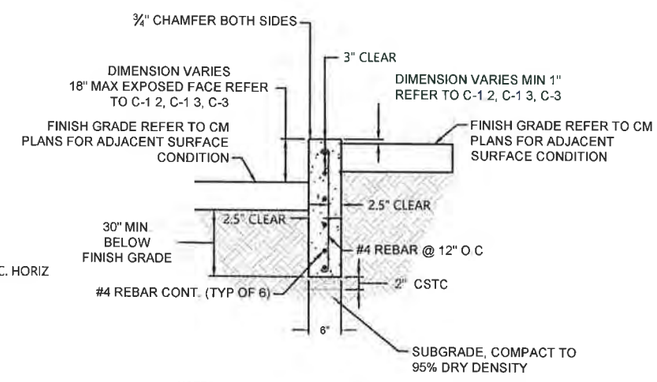

NOTES:
WHEN CONCRETE RETAINING WALL IS ADJACENT TO CONCRETE PAVING, INSTALL PRE-MOLDED JOINT FILLER AT INTERFACE, USE SNAP LOCK FILLED WITH SIKA FLEX SELF-LEVELING CAULK

6 C-1.3 CONCRETE RETAINING WALL TYPE 3
SCALE: 1" = 1.0'

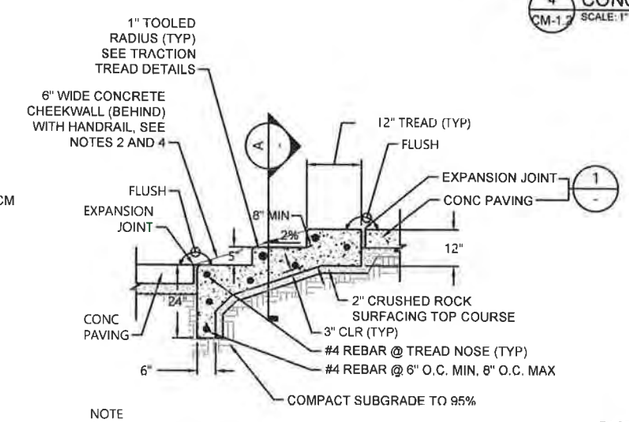

NOTE
1. REFER TO S-2 AND S-3 FOR BEACH ACCESS CONCRETE STEPS
2. SEE DETAIL 16 ON CM-4 FOR HANDRAIL AT STEPS.
3. LIGHT BROOM FINISH ON TREADS, SACK FACE OF RISERS.
4. 6" WIDE CHEEKWALL FOOTING SHALL EXTEND TO SAME DEPTH OF STAIRS AND SHALL HAVE SAME REBAR LAYOUT DESIGN AS STAIRS.

7 C-1.2 NORTH BEACH CONCRETE STEPS AT PATHWAY
SCALE: NTS

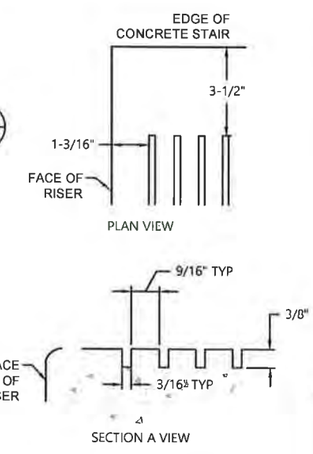

TYP TRACTION TREAD DETAILS

PERMIT SET

ONE INCH
AT FULL SIZE, IF NOT ONE INCH SCALE ACCORDINGLY

ANCHOR QEA

CITY OF KIRKLAND WASHINGTON

123 Fifth Ave
Kirkland, WA 98033
(425) 587-3300

STATE OF WASHINGTON — ANN HOOK SPOONER — NO. 645 EXP. 06/ 19/2021 — LICENSED LANDSCAPE ARCHITECT

REVISIONS

REV	DATE	BY	APP'D	DESCRIPTION

DESIGNED BY: A. SPOONER
DRAWN BY: C. WEE/C. HEWETT
CHECKED BY: P. HUMMEL
APPROVED BY: P. HUMMEL
SCALE: AS SHOWN
DATE: JUNE 2020

DAVID E. BRINK PARK SHORELINE RENOVATION

CONSTRUCTION MATERIALS DETAILS (1 OF 3)

CM-2
BNR20-06182
Page 4 of 12

SHEET # 22 OF 37

K:\Projects\1006-City of Kirkland\David Brink Park Shoreline Renovation\Construction Plans\1006-PL-CM Details.dwg CM-2 CONSTRUCTION MATERIALS DETAILS (1 OF 3)
Sep 01, 2020 3:17pm cwee

City of Kirkland
Reviewed by T Elder
02/10/2021

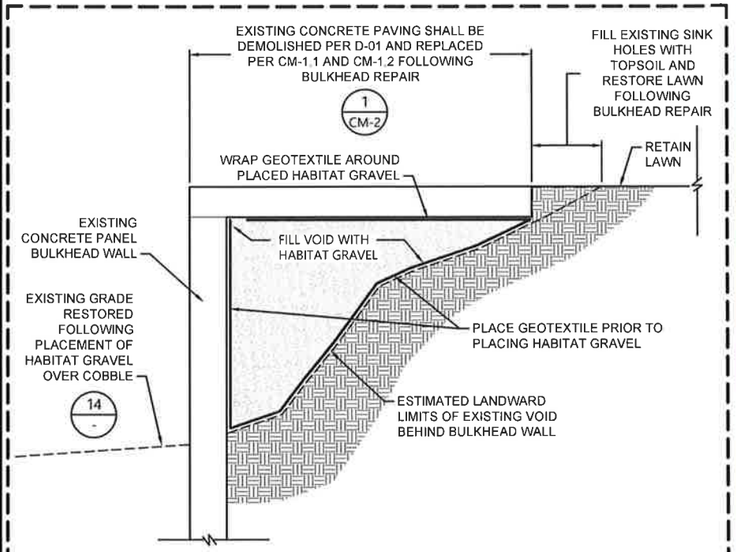

8 C-3 BULKHEAD REPAIR
SCALE: NOT TO SCALE

CONNECTOR WALK

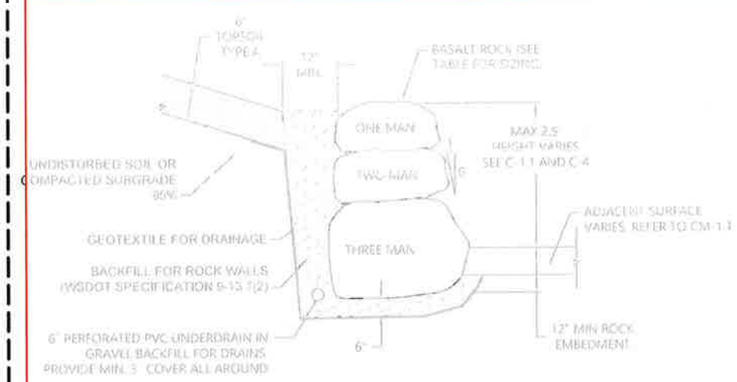

9 C-1.1 BASALT ROCK TERRACE
SCALE: NOT TO SCALE

BASALT ROCK TABLE		
ROCK SIZE	ROCK WEIGHT (LBS)	AVERAGE DIMENSION (IN)
ONE MAN	50-200	12 TO 18
TWO MAN	200 TO 700	18 TO 28
THREE MAN	700 TO 2,000	28 TO 36
FOUR MAN	2,000 TO 4,000	36 TO 48

ROCK SHALL BE ROCK FOR ROCK WALL (WSDOT SPECIFICATION 9-13.2)

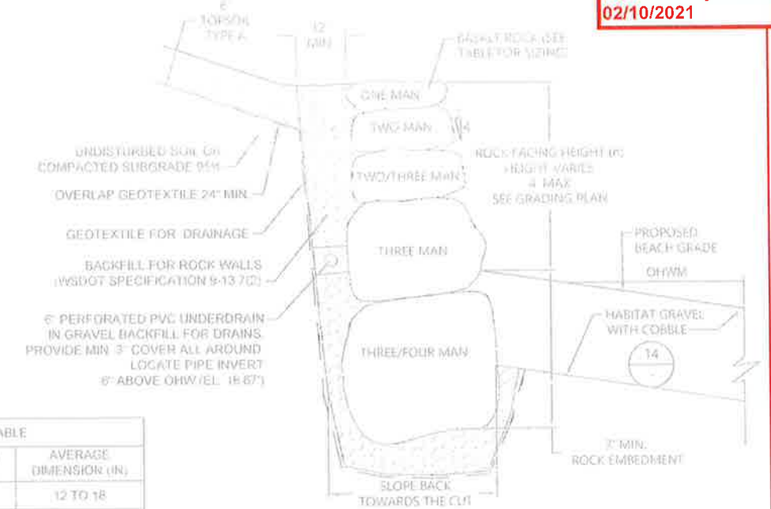

10 C-1.1 BASALT ROCKERY AT SHORELINE
SCALE: NOT TO SCALE

Refer to LSM20-06180 for these elements.

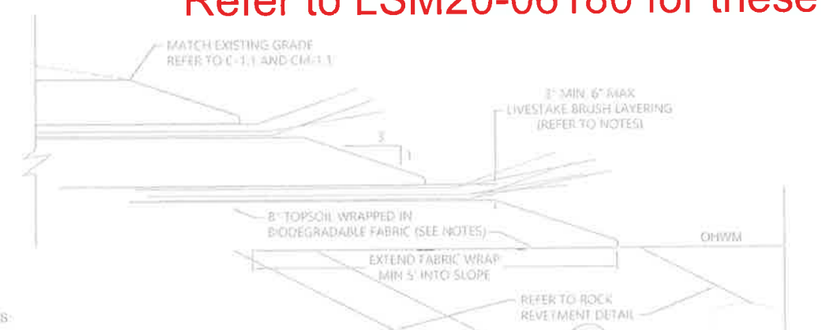

NOTES:

1. BIODEGRADABLE FABRIC SHALL BE BIODEGRADABLE EROSION CONTROL BLANKET FOR SLOPES STEEPER THAN 3:1 (H:V) PER WSDOT SPECIFICATION 9-14.6(2)A
2. EACH LIVESTAKE SHALL BE MINIMUM 48" IN LENGTH. PLANT 80% OF STAKE LENGTH INTO GROUND
3. REFER TO L-1.1 FOR SPECIES AND QUANTITY. USE EQUAL NUMBER AND EVEN DISTRIBUTION OF EACH SPECIES
4. HARVEST AND PLANT STAKES DURING THE DORMANT SEASON
5. TRIM BRANCHES CLOSE ALONG LIVESTAKE. CUT TOP OF STAKE SQUARE. MAKE ANGLED CUT AT BUTT-END OF LIVESTAKE AND PLANT BUTT-END DOWN. MAKE CLEAN CUTS AND DO NOT DAMAGE STAKES OR SPLIT END DURING INSTALLATION
6. SOAK CUTTINGS CONTINOUSLY PRIOR TO INSTALLATION
7. 2 TO 6 BUD SCARS SHALL BE ABOVE GROUND FOR EACH LIVESTAKE FOLLOWING INSTALLATION
8. LIVESTAKE SHALL BE MIN 1" AND MAX 3" IN DIAMETER
9. BUNDLE MINIMUM 3 LIVESTAKES TOGETHER AND PLANT CONTINUOUSLY ALONG TOP OF COIR WRAP

12 CM-1.1 BRUSH LAYERING AT ROCK REVETMENT
SCALE: 1" = 1'-0"

13 C-2 BEACH TYPICAL DETAIL
SCALE: NOT TO SCALE

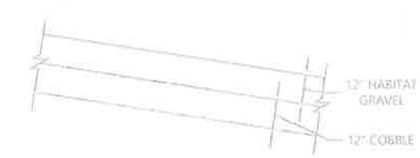

14 C-2 HABITAT GRAVEL OVER COBBLE
SCALE: NOT TO SCALE

REFER TO WSDOT SPECIFICATION SPECIAL PROVISION 9-13.6(1) FOR HABITAT GRAVEL AND 9-13.6(2) BEACH SAND. COBBLE SHALL BE 8" STREAMBED COBBLE PER WSDOT SPECIFICATION 9-03.11(2)

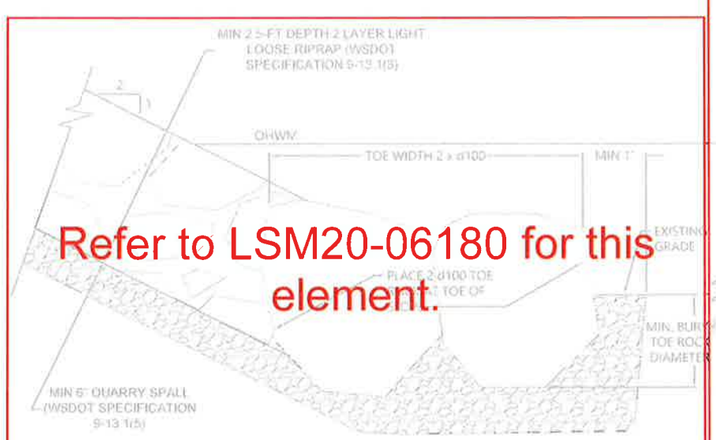

Refer to LSM20-06180 for this element.

11 CM-1.1 ROCK REVETMENT
SCALE: 1" = 1'-0"

PERMIT SET

AT FULL SCALE THIS DRAWING IS 1 INCH SCALE ACCORDINGLY

ANCHOR QEA

CITY OF KIRKLAND WASHINGTON
123 Fifth Ave
Kirkland, WA 98033
(425) 587-3300

STATE OF WASHINGTON
ANNA HOOK SPOONER
NO. 645 EXP. 06/18/2021
LICENSED LANDSCAPE ARCHITECT

REVISIONS				
REV	DATE	BY	APP'D	DESCRIPTION

DESIGNED BY: A. SPOONER
DRAWN BY: C. WEE/C. HEWETT
CHECKED BY: P. HUMMEL
APPROVED BY: P. HUMMEL
SCALE: AS SHOWN
DATE: JUNE 2020

DAVID E. BRINK PARK SHORELINE RENOVATION

CONSTRUCTION MATERIALS DETAILS (2 OF 3)

CM-3
BNR20-06182
Page 5 of 12
SHEET # 23 OF 37

K:\Projects\1006-City of Kirkland\David Brink Park Shoreline Renovation\Construction Plans\1006-PL-CM Details.dwg CM-3 CONSTRUCTION MATERIALS DETAILS (2 OF 3)
Sep 01, 2020 3:17pm cwee

City of Kirkland
Reviewed by T Elder
02/10/2021

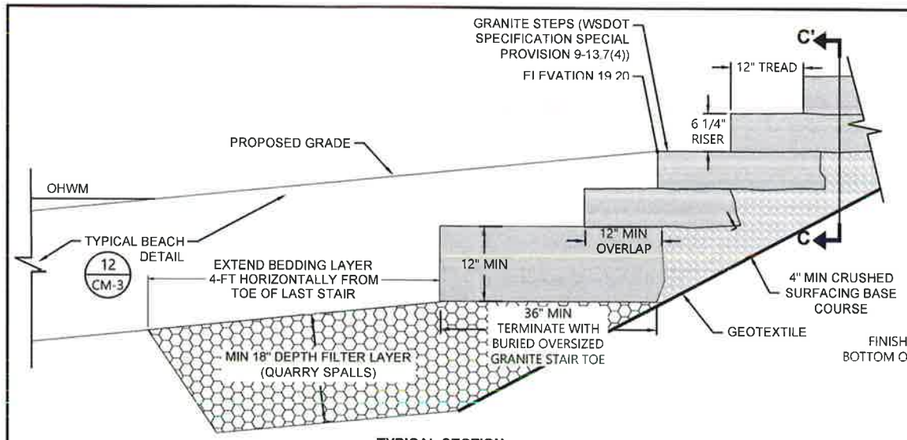

TYPICAL SECTION

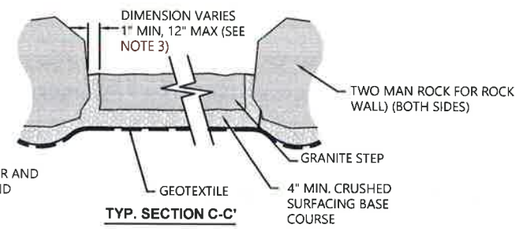

TYP. SECTION C-C'

NOTES:
1. SEE SHEET C-1.1 FOR TOP OF STAIR AND BOTTOM OF STAIR ELEVATION AND TREAD AND RISER COUNT
2. SEE DETAIL 16, THIS SHEET FOR HANDRAIL DETAIL
3. PLACE TWO MAN ROCK 12" MAX DISTANCE FROM GRANITE STEP TO ACCOMMODATE HANDRAIL FOOTING ONLY. PLACE TWO MAN ROCK AT 1" MIN AND 4" MAX ALONG GRANITE STEPS IN ALL OTHER AREAS.

15 C-1.1 GRANITE STEPS
SCALE: NOT TO SCALE

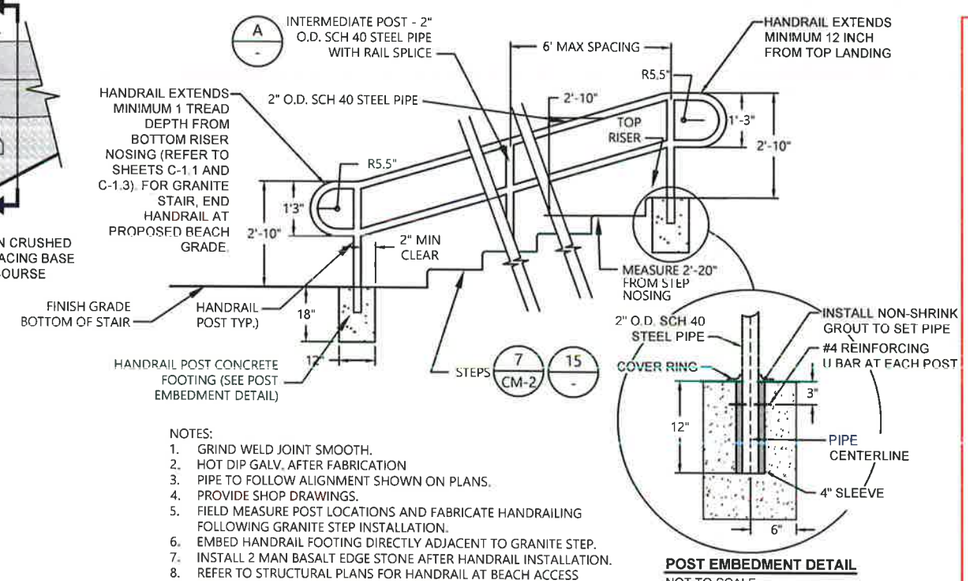

NOTES:
1. GRIND WELD JOINT SMOOTH.
2. HOT DIP GALV. AFTER FABRICATION
3. PIPE TO FOLLOW ALIGNMENT SHOWN ON PLANS.
4. PROVIDE SHOP DRAWINGS.
5. FIELD MEASURE POST LOCATIONS AND FABRICATE HANDRAILING FOLLOWING GRANITE STEP INSTALLATION.
6. EMBED HANDRAIL FOOTING DIRECTLY ADJACENT TO GRANITE STEP.
7. INSTALL 2 MAN BASALT EDGE STONE AFTER HANDRAIL INSTALLATION.
8. REFER TO STRUCTURAL PLANS FOR HANDRAIL AT BEACH ACCESS STEPS (SOUTH BEACH).

POST EMBEDMENT DETAIL
NOT TO SCALE

16 CM-1.1 HANDRAIL AT GRANITE STEPS AND NORTH BEACH CONCRETE STEPS
SCALE: NOT TO SCALE

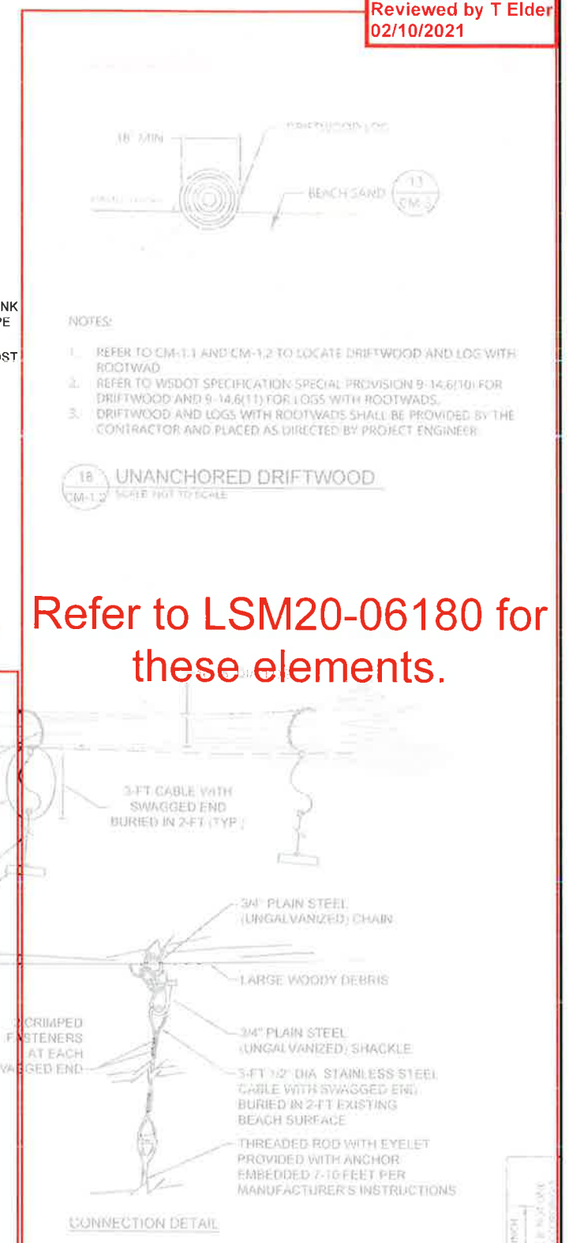

Refer to LSM20-06180 for these elements.

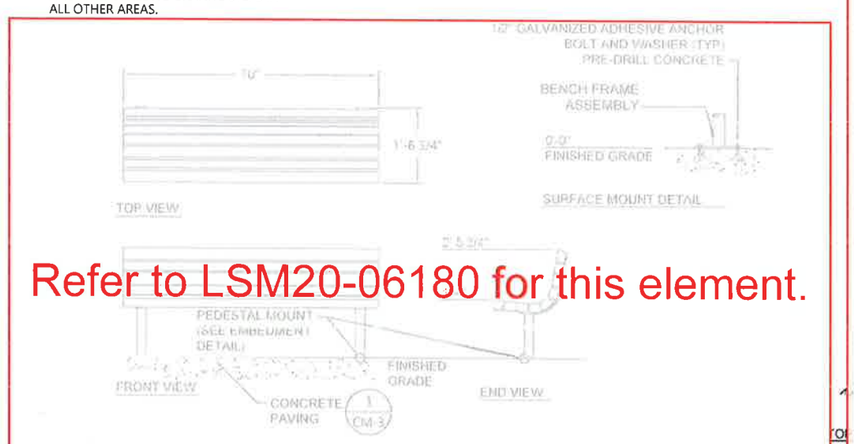

Refer to LSM20-06180 for this element.

NOTES:
EMBEDMENT DETAIL IS FOR BENCHES LOCATED WITHIN UPLAND PARK ONLY. REFER TO STRUCTURAL DETAILS FOR SURFACE MOUNT DETAIL FOR BENCHES ON PIER.

17 CM-1 BENCH
SCALE: NOT TO SCALE

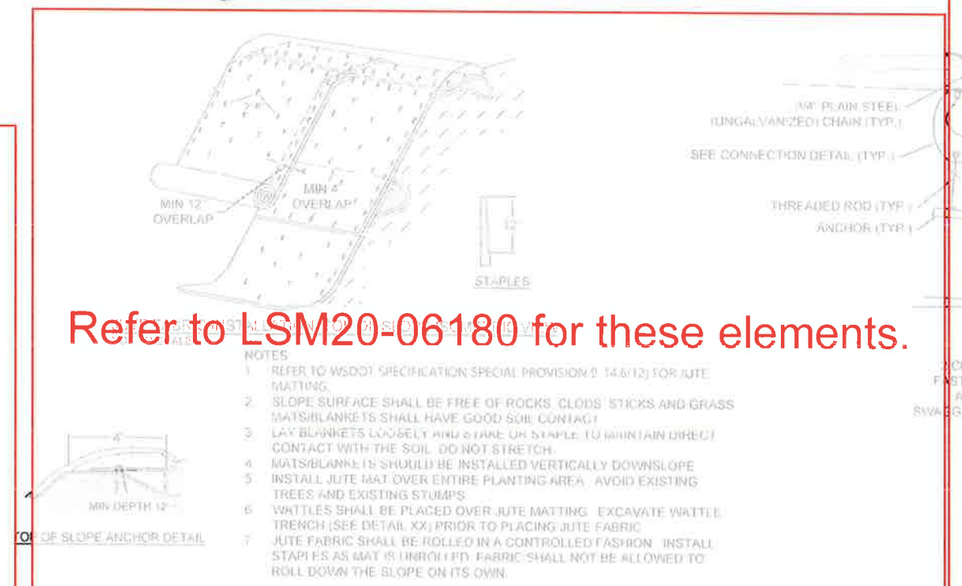

Refer to LSM20-06180 for these elements.

NOTES:
1. REFER TO WSDOT SPECIFICATION SPECIAL PROVISION 9-14.6(12) FOR JUTE MATTING.
2. SLOPE SURFACE SHALL BE FREE OF ROCKS, CLODS, STICKS AND GRASS
3. MATS/BLANKETS SHALL HAVE GOOD SOIL CONTACT
4. LAY BLANKETS LOOSELY AND STAKE OR STAPLE TO MAINTAIN DIRECT CONTACT WITH THE SOIL. DO NOT STRETCH.
5. MATS/BLANKETS SHOULD BE INSTALLED VERTICALLY DOWNSLOPE
6. INSTALL JUTE MAT OVER ENTIRE PLANTING AREA. AVOID EXISTING TREES AND EXISTING STUMPS
7. WATTLES SHALL BE PLACED OVER JUTE MATTING. EXCAVATE WATTLE TRENCH (SEE DETAIL XX) PRIOR TO PLACING JUTE FABRIC
8. JUTE FABRIC SHALL BE ROLLED IN A CONTROLLED FASHION. INSTALL STAPLES AS MAT IS UNROLLED. FABRIC SHALL NOT BE ALLOWED TO ROLL DOWN THE SLOPE ON ITS OWN.

19 CM-1.1 JUTE FABRIC SLOPE PROTECTION
SCALE: NTS

PERMIT SET

ANCHOR QEA

CITY OF KIRKLAND WASHINGTON
123 Fifth Ave
Kirkland, WA 98033
(425) 587-3300

STATE OF WASHINGTON ANNA HOOK SPOONER NO. 2415 EXP. 06/19/2021 LICENSED LANDSCAPE ARCHITECT

REVISIONS

REV	DATE	BY	APP'D	DESCRIPTION

DESIGNED BY: A. SPOONER
DRAWN BY: C. WEE/C. HEWETT
CHECKED BY: P. HUMMEL
APPROVED BY: P. HUMMEL
SCALE: AS SHOWN
DATE: JUNE 2020

DAVID E. BRINK PARK SHORELINE RENOVATION

CONSTRUCTION MATERIALS DETAILS (3 OF 3)

CM-4
BNR20-06182
Page 6 of 12
SHEET # 24 OF 37

K:\Projects\1006-City of Kirkland\David Brink Park Shoreline Renovation\Construction Plans\1006-PL-CM Details.dwg CM-3 CONSTRUCT ON MATERIALS DETAILS (3 OF 3)
Sep 01, 2020 3:17pm owee

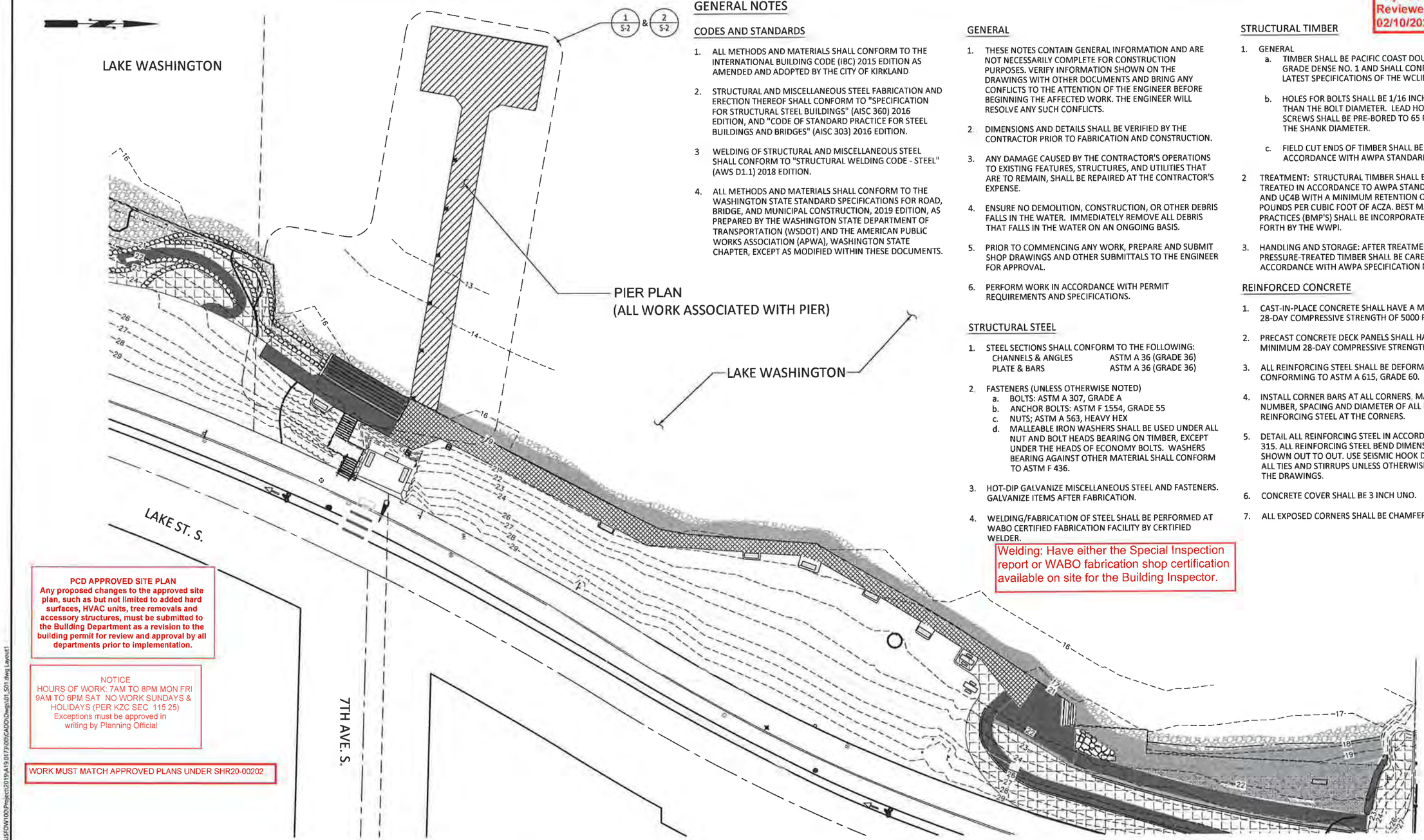

City of Kirkland
Reviewed by T Elder
02/10/2021

GENERAL NOTES

CODES AND STANDARDS

1. ALL METHODS AND MATERIALS SHALL CONFORM TO THE INTERNATIONAL BUILDING CODE (IBC) 2015 EDITION AS AMENDED AND ADOPTED BY THE CITY OF KIRKLAND.
2. STRUCTURAL AND MISCELLANEOUS STEEL FABRICATION AND ERECTION THEREOF SHALL CONFORM TO "SPECIFICATION FOR STRUCTURAL STEEL BUILDINGS" (AISC 360) 2016 EDITION, AND "CODE OF STANDARD PRACTICE FOR STEEL BUILDINGS AND BRIDGES" (AISC 303) 2016 EDITION.
3. WELDING OF STRUCTURAL AND MISCELLANEOUS STEEL SHALL CONFORM TO "STRUCTURAL WELDING CODE - STEEL" (AWS D1.1) 2018 EDITION.
4. ALL METHODS AND MATERIALS SHALL CONFORM TO THE WASHINGTON STATE STANDARD SPECIFICATIONS FOR ROAD, BRIDGE, AND MUNICIPAL CONSTRUCTION, 2019 EDITION, AS PREPARED BY THE WASHINGTON STATE DEPARTMENT OF TRANSPORTATION (WSDOT) AND THE AMERICAN PUBLIC WORKS ASSOCIATION (APWA), WASHINGTON STATE CHAPTER, EXCEPT AS MODIFIED WITHIN THESE DOCUMENTS.

GENERAL

1. THESE NOTES CONTAIN GENERAL INFORMATION AND ARE NOT NECESSARILY COMPLETE FOR CONSTRUCTION PURPOSES. VERIFY INFORMATION SHOWN ON THE DRAWINGS WITH OTHER DOCUMENTS AND BRING ANY CONFLICTS TO THE ATTENTION OF THE ENGINEER BEFORE BEGINNING THE AFFECTED WORK. THE ENGINEER WILL RESOLVE ANY SUCH CONFLICTS.
2. DIMENSIONS AND DETAILS SHALL BE VERIFIED BY THE CONTRACTOR PRIOR TO FABRICATION AND CONSTRUCTION.
3. ANY DAMAGE CAUSED BY THE CONTRACTOR'S OPERATIONS TO EXISTING FEATURES, STRUCTURES, AND UTILITIES THAT ARE TO REMAIN, SHALL BE REPAIRED AT THE CONTRACTOR'S EXPENSE.
4. ENSURE NO DEMOLITION, CONSTRUCTION, OR OTHER DEBRIS FALLS IN THE WATER. IMMEDIATELY REMOVE ALL DEBRIS THAT FALLS IN THE WATER ON AN ONGOING BASIS.
5. PRIOR TO COMMENCING ANY WORK, PREPARE AND SUBMIT SHOP DRAWINGS AND OTHER SUBMITTALS TO THE ENGINEER FOR APPROVAL.
6. PERFORM WORK IN ACCORDANCE WITH PERMIT REQUIREMENTS AND SPECIFICATIONS.

STRUCTURAL STEEL

1. STEEL SECTIONS SHALL CONFORM TO THE FOLLOWING:
   CHANNELS & ANGLES — ASTM A 36 (GRADE 36)
   PLATE & BARS — ASTM A 36 (GRADE 36)
2. FASTENERS (UNLESS OTHERWISE NOTED)
   a. BOLTS: ASTM A 307, GRADE A
   b. ANCHOR BOLTS: ASTM F 1554, GRADE 55
   c. NUTS; ASTM A 563, HEAVY HEX
   d. MALLEABLE IRON WASHERS SHALL BE USED UNDER ALL NUT AND BOLT HEADS BEARING ON TIMBER, EXCEPT UNDER THE HEADS OF ECONOMY BOLTS. WASHERS BEARING AGAINST OTHER MATERIAL SHALL CONFORM TO ASTM F 436.
3. HOT-DIP GALVANIZE MISCELLANEOUS STEEL AND FASTENERS. GALVANIZE ITEMS AFTER FABRICATION.
4. WELDING/FABRICATION OF STEEL SHALL BE PERFORMED AT WABO CERTIFIED FABRICATION FACILITY BY CERTIFIED WELDER.

Welding: Have either the Special Inspection report or WABO fabrication shop certification available on site for the Building Inspector.

STRUCTURAL TIMBER

1. GENERAL
   a. TIMBER SHALL BE PACIFIC COAST DOUGLAS FIR, GRADE DENSE NO. 1 AND SHALL CONFORM TO THE LATEST SPECIFICATIONS OF THE WCLIB.
   b. HOLES FOR BOLTS SHALL BE 1/16 INCH LARGER THAN THE BOLT DIAMETER. LEAD HOLES FOR LAG SCREWS SHALL BE PRE-BORED TO 65 PERCENT OF THE SHANK DIAMETER.
   c. FIELD CUT ENDS OF TIMBER SHALL BE TREATED IN ACCORDANCE WITH AWPA STANDARD M4.
2. TREATMENT: STRUCTURAL TIMBER SHALL BE PRESSURE TREATED IN ACCORDANCE TO AWPA STANDARDS T1, U1 AND UC4B WITH A MINIMUM RETENTION OF 0.60 POUNDS PER CUBIC FOOT OF ACZA. BEST MANAGEMENT PRACTICES (BMP'S) SHALL BE INCORPORATED AS SET FORTH BY THE WWPI.
3. HANDLING AND STORAGE: AFTER TREATMENT, PRESSURE-TREATED TIMBER SHALL BE CARED FOR IN ACCORDANCE WITH AWPA SPECIFICATION M4.

REINFORCED CONCRETE

1. CAST-IN-PLACE CONCRETE SHALL HAVE A MINIMUM 28-DAY COMPRESSIVE STRENGTH OF 5000 PSI.
2. PRECAST CONCRETE DECK PANELS SHALL HAVE A MINIMUM 28-DAY COMPRESSIVE STRENGTH OF 6000 PSI.
3. ALL REINFORCING STEEL SHALL BE DEFORMED STEEL BARS CONFORMING TO ASTM A 615, GRADE 60.
4. INSTALL CORNER BARS AT ALL CORNERS, MATCH THE NUMBER, SPACING AND DIAMETER OF ALL HORIZONTAL REINFORCING STEEL AT THE CORNERS.
5. DETAIL ALL REINFORCING STEEL IN ACCORDANCE WITH ACI 315. ALL REINFORCING STEEL BEND DIMENSIONS ARE SHOWN OUT TO OUT. USE SEISMIC HOOK DETAILS FOR ALL TIES AND STIRRUPS UNLESS OTHERWISE SHOWN ON THE DRAWINGS.
6. CONCRETE COVER SHALL BE 3 INCH UNO.
7. ALL EXPOSED CORNERS SHALL BE CHAMFERED 3/4" INCH

PCD APPROVED SITE PLAN
Any proposed changes to the approved site plan, such as but not limited to added hard surfaces, HVAC units, tree removals and accessory structures, must be submitted to the Building Department as a revision to the building permit for review and approval by all departments prior to implementation.

NOTICE
HOURS OF WORK: 7AM TO 8PM MON FRI
9AM TO 6PM SAT NO WORK SUNDAYS & HOLIDAYS (PER KZC SEC 115 25)
Exceptions must be approved in writing by Planning Official

WORK MUST MATCH APPROVED PLANS UNDER SHR20-00202

PERMIT SET

ONE INCH — AT FULL SIZE, IF NOT ONE INCH SCALE ACCORDINGLY

R:\USFOW100\Project\2019\A19\0173\00\CADD\Dwgs\01_S01.dwg Layout1
Sep 01, 2020 2:06pm USJM67547

ANCHOR QEA

CITY OF KIRKLAND WASHINGTON
123 Fifth Ave
Kirkland, WA 98033
(425) 587-3300

WSP USA Inc.
33301 9th Avenue South
Suite 300
Federal Way, WA 98003-2600
TEL: (206) 431-2300
FAX: (206) 431-2250

JOSEPH R. GALLOWAY — STATE OF WASHINGTON — 32908 — REGISTERED PROFESSIONAL ENGINEER

REVISIONS				
REV	DATE	BY	APP'D	DESCRIPTION

DESIGNED BY: C ENG
DRAWN BY: J MENDENHALL
CHECKED BY: C ENG
APPROVED BY: J GALLOWAY
SCALE: AS NOTED
DATE: September 2020

DAVID E. BRINK PARK SHORELINE RENOVATION
90% DESIGN

STRUCTURAL PLAN

S-1
BNR20-06182
Page 7 of 12
SHEET NO 18 OF 23

City of Kirkland
Reviewed by T Elder
02/10/2021

GRID SCHEDULE		
GRID	x'-xx" from	GRID
A.6	6'-5 1/2"	'A'
A.8	10'-4"	'A'
B.9	6'-2"	'B'
C.4	2'-9 3/4"	'C'
C.6	6'-9 3/4"	'C'
D.2	1'-0 3/4"	'D'
E.2	1'-8 1/2"	'E'
E.4	5'-7"	'E'

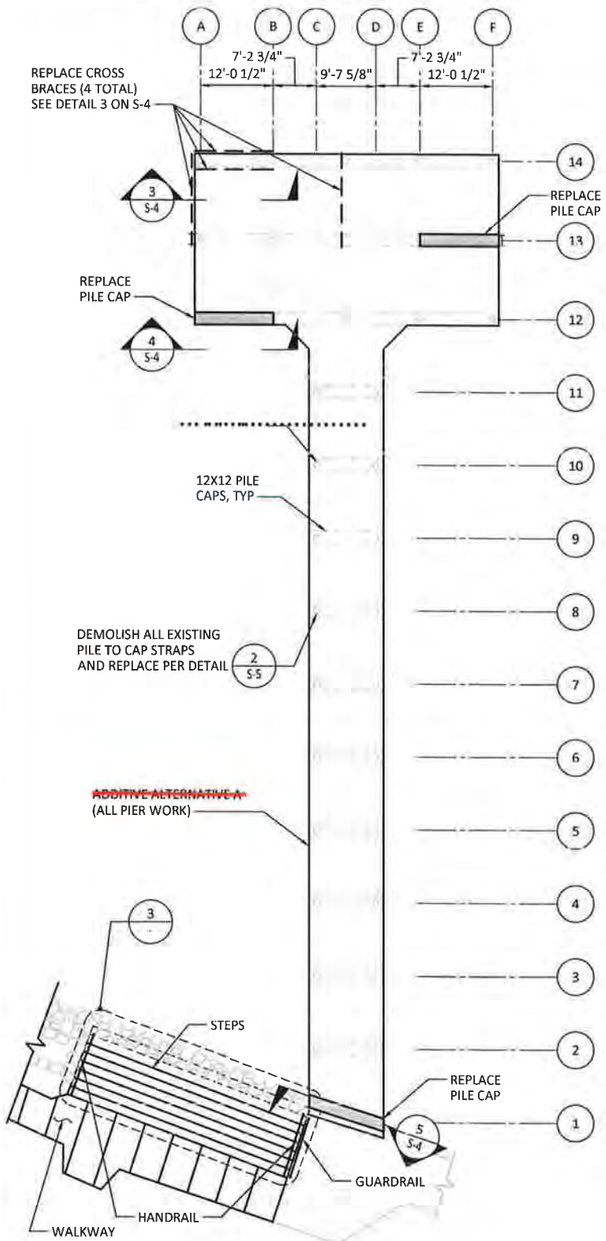

1 S-1 **PILE & CAP PLAN - PIER**
SCALE: 1' = 12'-0"

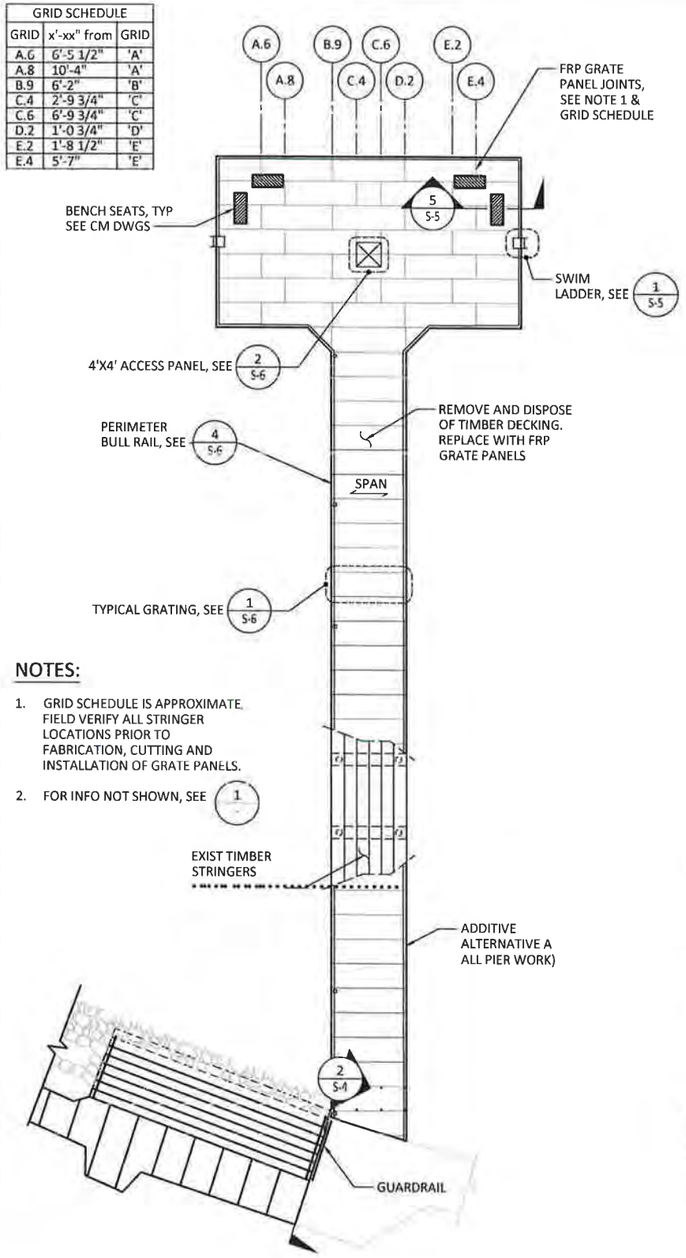

NOTES:

1. GRID SCHEDULE IS APPROXIMATE. FIELD VERIFY ALL STRINGER LOCATIONS PRIOR TO FABRICATION, CUTTING AND INSTALLATION OF GRATE PANELS.
2. FOR INFO NOT SHOWN, SEE 1

2 S-1 **SURFACE PLAN - PIER**
SCALE: 1' = 12'-0"

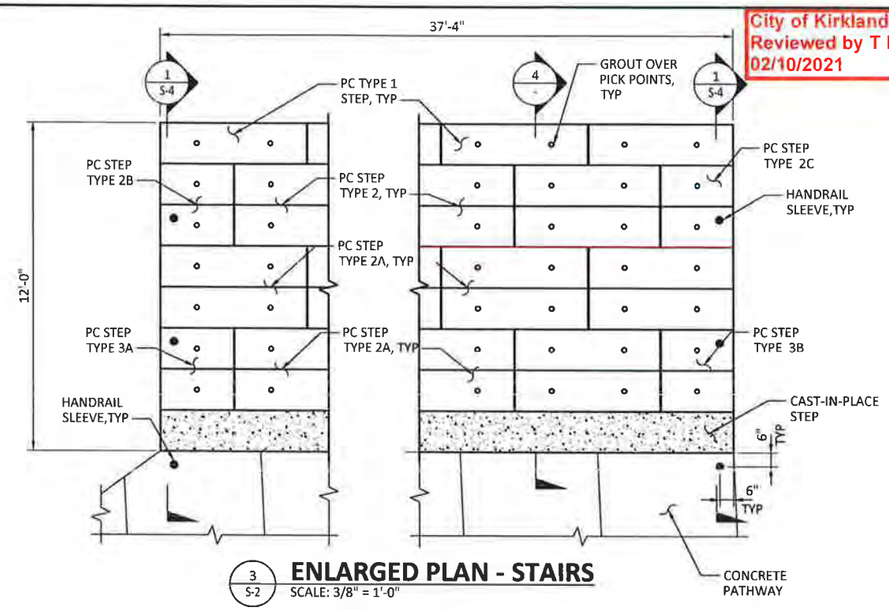

3 S-2 **ENLARGED PLAN - STAIRS**
SCALE: 3/8" = 1'-0"

NOTE:
HANDRAILS
NOT SHOWN

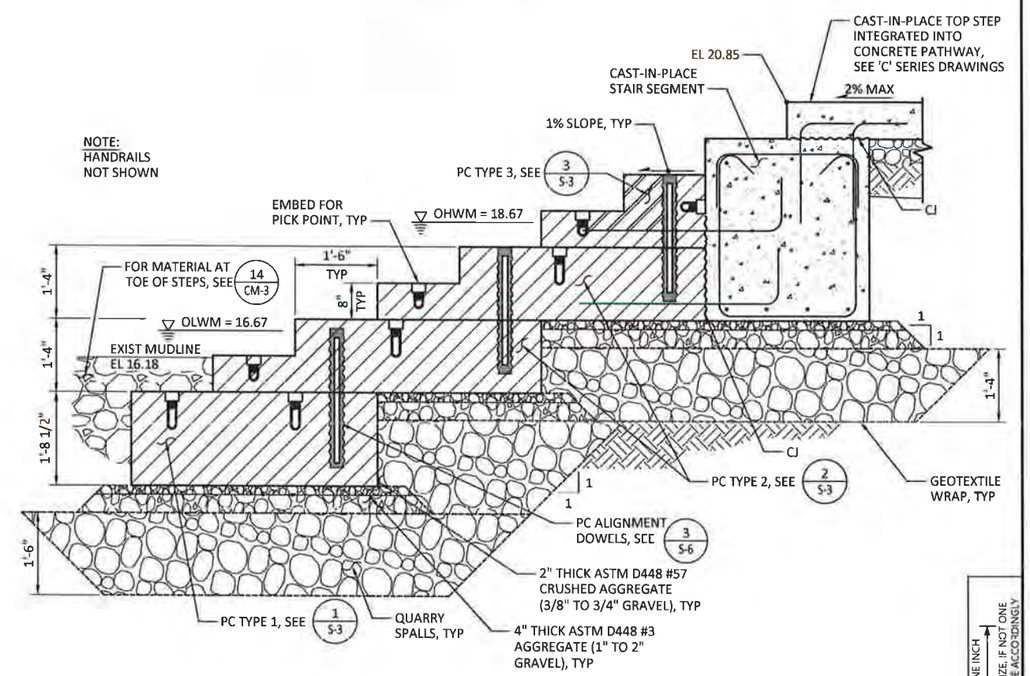

4 - **SECTION**
SCALE: 3/4" = 1'-0"

PERMIT SET

ONE INCH
AT FULL SIZE, IF NOT ONE INCH SCALE ACCORDINGLY

R:\USFSW100\Projects\2019\A19.0173\00\CADD\Dwgs\01_S02.dwg Layout1
Sep 01, 2020 2:07pm USJM67547

ANCHOR QEA

CITY OF KIRKLAND WASHINGTON
123 Fifth Ave
Kirkland, WA 98033
(425) 587-3300

WSP
WSP USA Inc.
33301 9th Avenue South
Suite 300
Federal Way, WA 98003-2600
TEL: (206) 431-2300
FAX: (206) 431-2250

JOSEPH R. GALLOWAY
STATE OF WASHINGTON
52908
REGISTERED PROFESSIONAL ENGINEER

REVISIONS				
REV	DATE	BY	APP'D	DESCRIPTION

DESIGNED BY: C ENG
DRAWN BY: J MENDENHALL
CHECKED BY: C ENG
APPROVED BY: J GALLOWAY
SCALE: AS NOTED
DATE: September 2020

DAVID E. BRINK PARK SHORELINE RENOVATION
90% DESIGN

PIER AND STEPS PLAN

S-2
BNR20-06182
Page 8 of 12

SHEET NO 19 OF 23

City of Kirkland
Reviewed by T Elder
02/10/2021

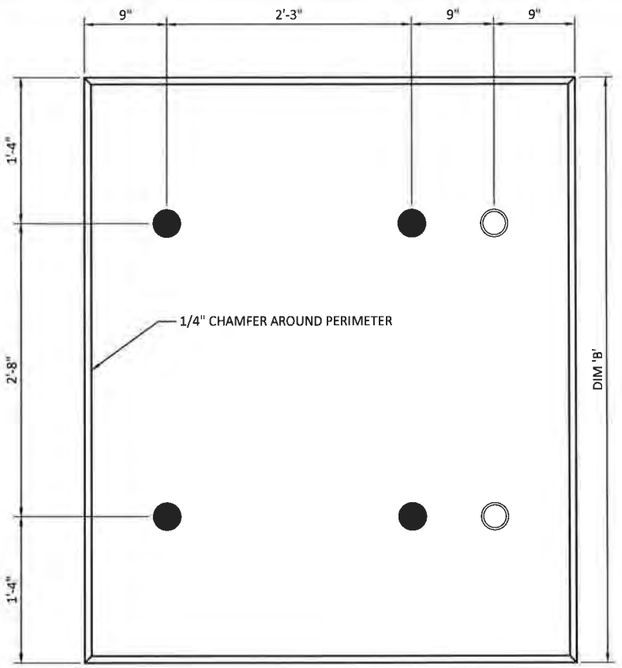

ENLARGED PLAN - PC STEP TYPE 1

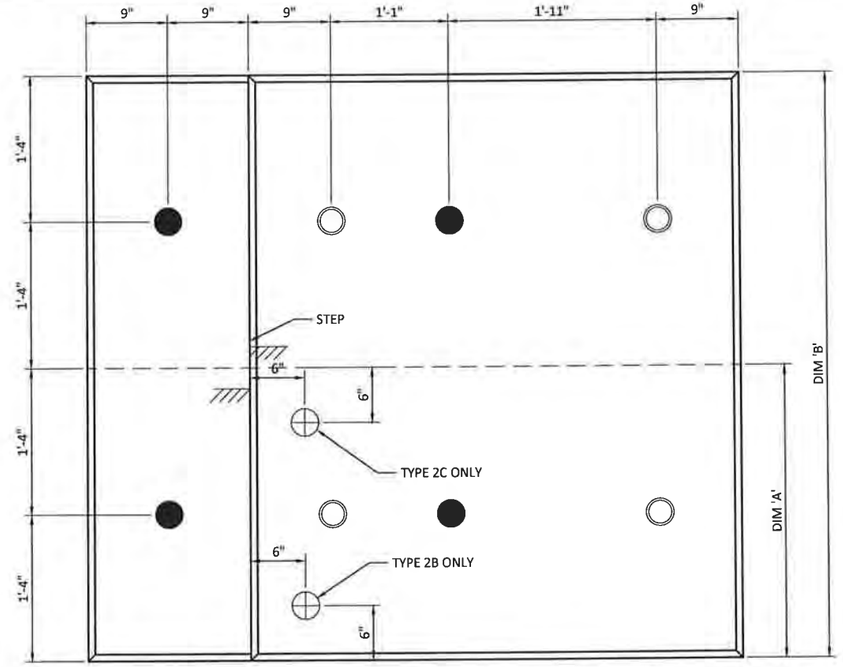

ENLARGED PLAN - PC STEP TYPE 2

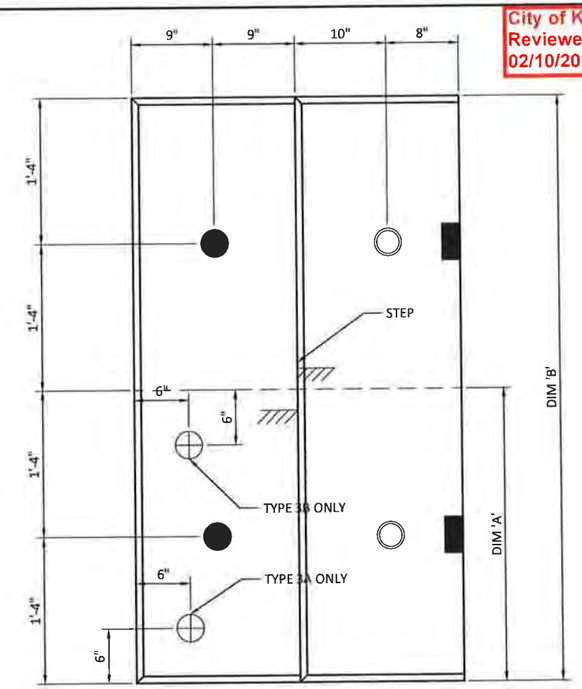

ENLARGED PLAN - PC STEP TYPE 3

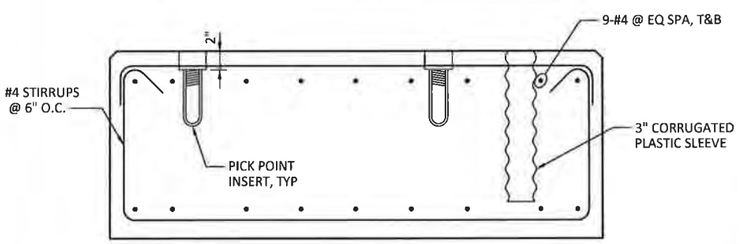

1/S-2 DETAIL - PC STEP TYPE 1

SCALE: 1 1/2" = 1'-0"

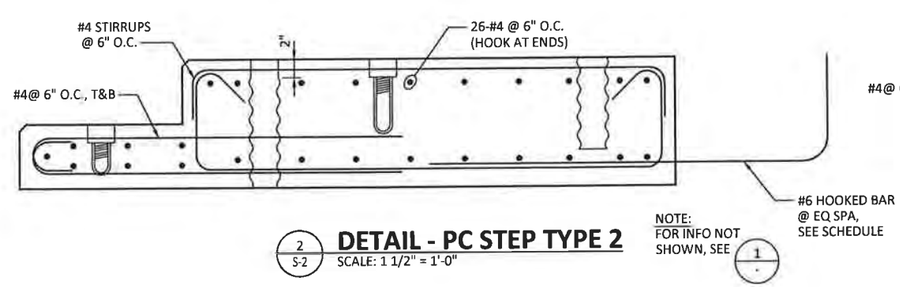

NOTE:
FOR INFO NOT SHOWN, SEE 1/-

2/S-2 DETAIL - PC STEP TYPE 2

SCALE: 1 1/2" = 1'-0"

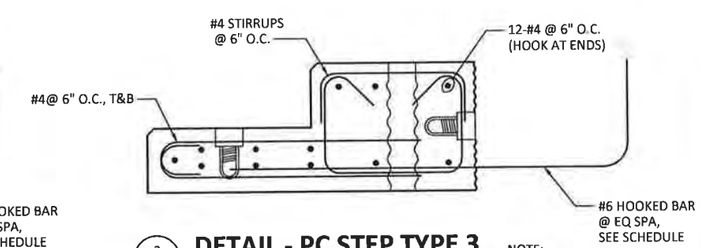

NOTE:
FOR INFO NOT SHOWN, SEE 1/-

3/S-2 DETAIL - PC STEP TYPE 3

SCALE: 1 1/2" = 1'-0"

LEGEND:

- ● PICK POINT INSERT (VERT FACE)
- ○ RAIL SLEEVE
- ⊕ RAIL SLEEVE

SCHEDULE

STEP TYPE	STEP QTY	DIM	QTY OF #6 HOOKED BARS (PER STEP)
1	7	B	N/A
2	6	B	N/A
2A	7	B	6
2B	1	A	N/A
2C	1	A	N/A
3	6	B	6
3A	1	A	4
3B	1	A	4

PERMIT SET

ONE INCH
AT FULL SIZE, IF NOT ONE INCH SCALE ACCORDINGLY

ANCHOR QEA

CITY OF KIRKLAND WASHINGTON
123 Fifth Ave
Kirkland, WA 98033
(425) 587-3300

WSP USA Inc.
33301 9th Avenue South
Suite 300
Federal Way, WA 98003-2600
TEL: (206) 431-2300
FAX: (206) 431-2250

JOSEPH R. GALLOWAY — STATE OF WASHINGTON — 32808 — REGISTERED PROFESSIONAL ENGINEER

REVISIONS				
REV	DATE	BY	APP'D	DESCRIPTION

DESIGNED BY: C. ENG
DRAWN BY: J. MENDENHALL
CHECKED BY: C. ENG
APPROVED BY: J. GALLOWAY
SCALE: AS NOTED
DATE: September 2020

DAVID E. BRINK PARK SHORELINE RENOVATION
90% DESIGN

STRUCTURAL DETAILS

S-3
BNR20-06182
Page 9 of 12
SHEET NO 20 OF 23

R:\USFDW100\Projects\2019\A19.0173\00\CADD\Dwgs\01_S03.dwg Layout1
Sep 01, 2020 2:07pm USJM675411

City of Kirkland
Reviewed by T Elder
02/10/2021

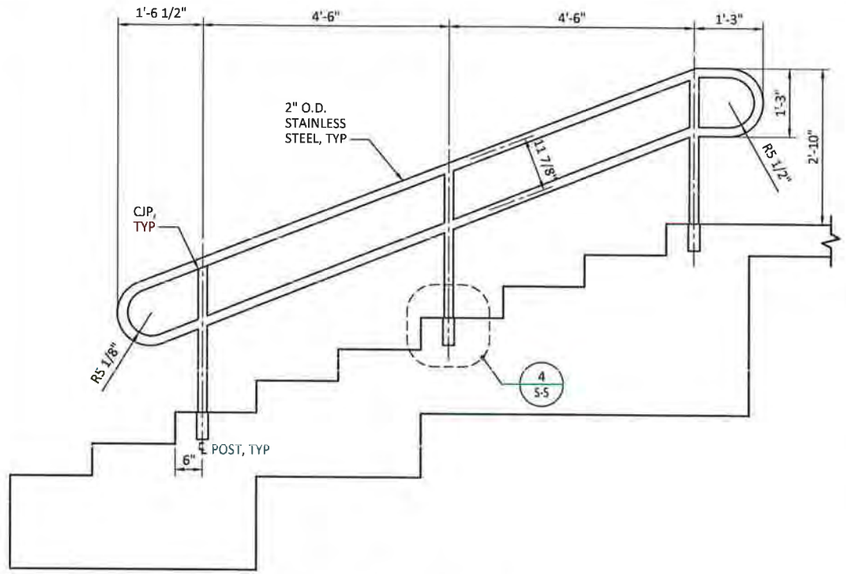

1 S-2 **DETAIL - HANDRAIL**
SCALE: 3/4" = 1'-0"

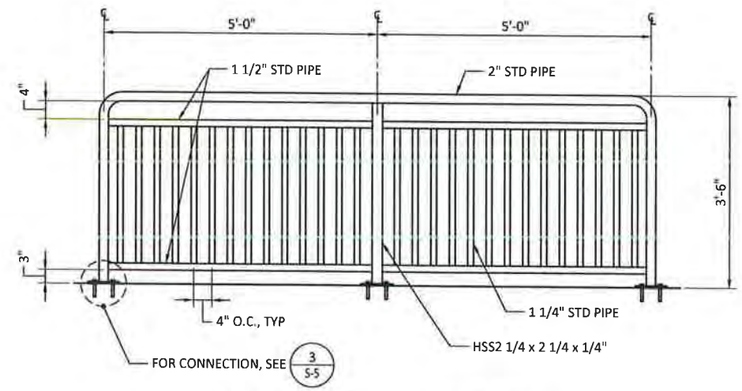

2 S-2 **DETAIL - GUARDRAIL**
SCALE: 3/4" = 1'-0"

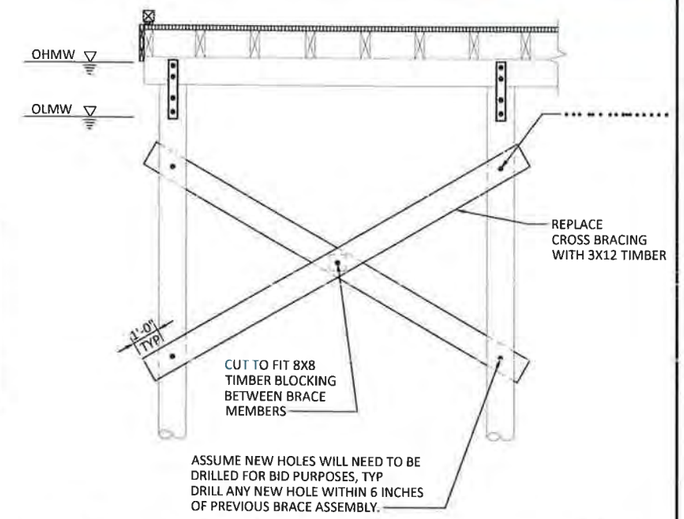

3 S-2 **ELEVATION - CROSS BRACE REPLACEMENT**
SCALE: 3/8" = 1'-0"
(ADDITIVE ALTERNATIVE A)

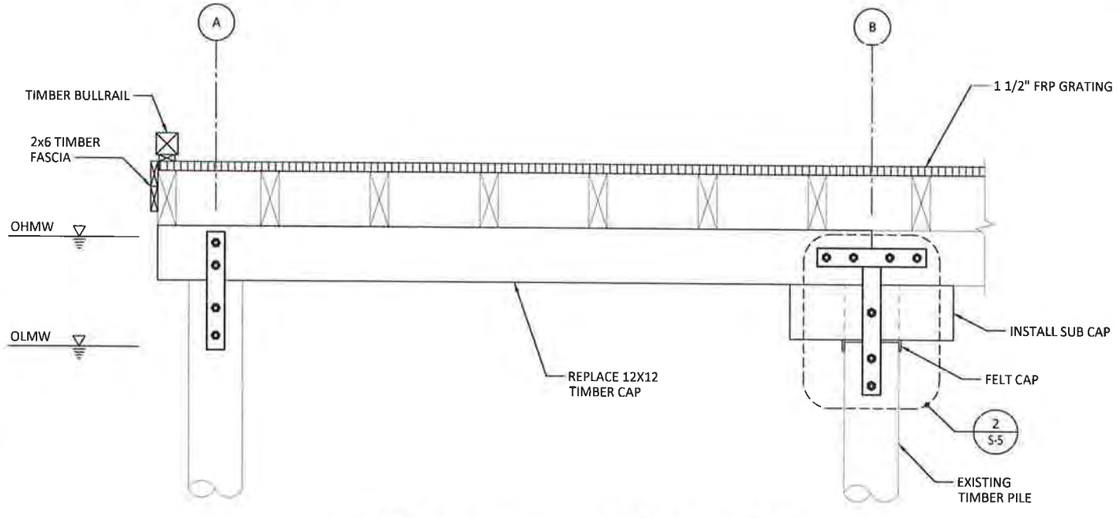

4 S-2 **ELEVATION - PILE CAP REPLACEMENT**
SCALE: 3/4" = 1'-0"
(ADDITIVE ALTERNATIVE A)

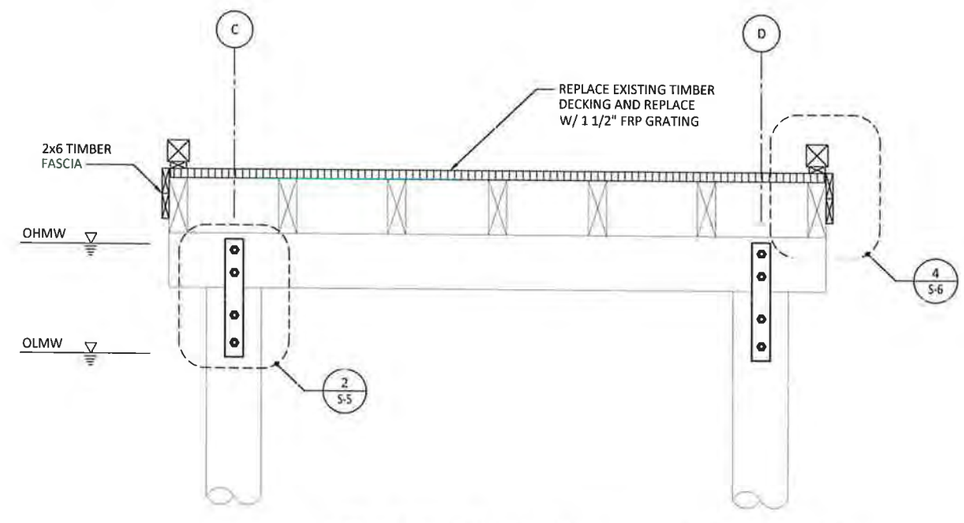

5 S-2 **ELEVATION - PILE CAP REPLACEMENT**
SCALE: 3/4" = 1'-0"
(ADDITIVE ALTERNATIVE A)

PERMIT SET

ONE INCH
AT FULL SIZE, IF NOT ONE INCH SCALE ACCORDINGLY

ANCHOR QEA

CITY OF KIRKLAND WASHINGTON
123 Fifth Ave
Kirkland, WA 98033
(425) 587-3300

WSP
WSP USA Inc.
33301 9th Avenue South
Suite 300
Federal Way, WA 98003-2600
TEL: (206) 431-2300
FAX: (206) 431-2250

JOSEPH R. GALLOWAY
STATE OF WASHINGTON
52808
REGISTERED
PROFESSIONAL ENGINEER

REVISIONS				
REV	DATE	BY	APP'D	DESCRIPTION

DESIGNED BY: C ENG
DRAWN BY: J. MENDENHALL
CHECKED BY: C ENG
APPROVED BY: J. GALLOWAY
SCALE: AS NOTED
DATE: September 2020

DAVID E. BRINK PARK SHORELINE RENOVATION
90% DESIGN

STRUCTURAL SECTIONS
SHEET 1

S-4
BNR20-06182
Page 10 of 12
SHEET NO. 21 OF 23

R:\USEFDW100\Projects\2019\A19.0173\09-ADD\Dwgs\01_S04.dwg Layout1
Sep 01, 2020 2:07pm USIM675471

Special Inspection required for epoxy grouted anchors.

City of Kirkland
Reviewed by T Elder
02/10/2021

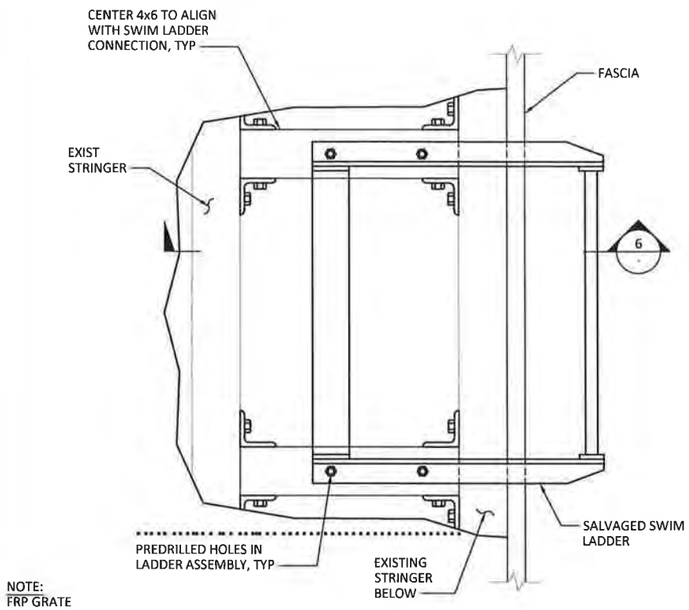

NOTE:
FRP GRATE NOT SHOWN

1 S-2 **ENLARGED PLAN - SWIM LADDER**
SCALE: 2" = 1'-0" (ADDITIVE ALTERNATIVE A)

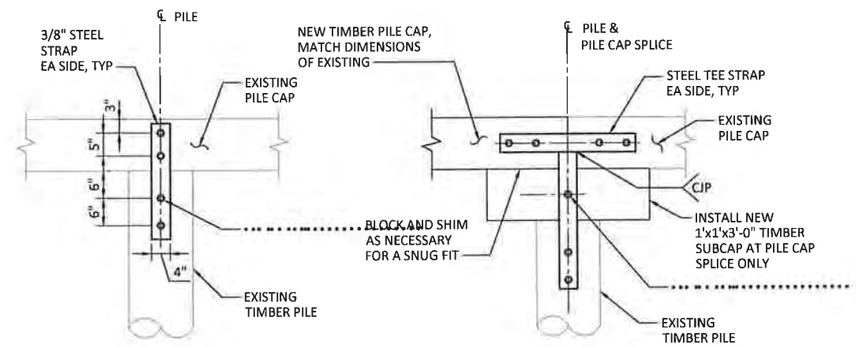

AT PILE

AT PILE CAP SPLICE

2 S-4 **DETAIL - PILE STRAP REPLACEMENT**
SCALE: 3/4" = 1'-0" (ADDITIVE ALTERNATIVE A)

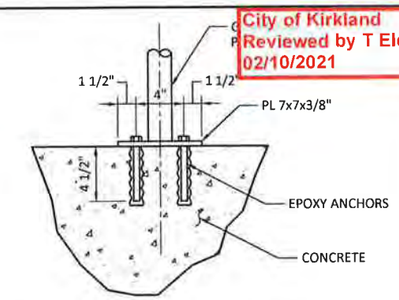

3 S-3 **DETAIL - GUARDRAIL POST**
SCALE: 2" = 1'-0"

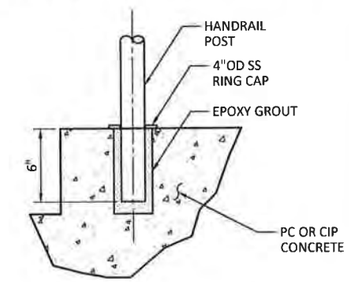

4 S-3 **DETAIL - HANDRAIL POST**
SCALE: 2" = 1'-0"

ALL Welding:

1. Is required to be done by a WABO certified welder and have Special Inspections by a WABO certified Inspection Agency
or
Be done in a WABO certified fabrication shop.

AND

2. Have either the Special Inspection report or WABO fabrication shop certification available on site for the Building Inspector.

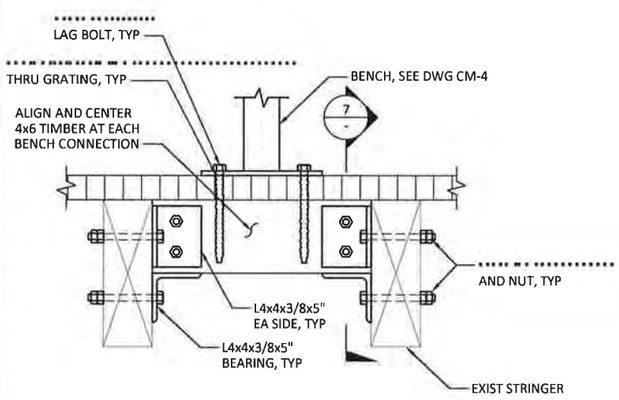

5 - **DETAIL - BENCH ANCHOR**
SCALE: 2" = 1'-0" (ADDITIVE ALTERNATIVE A)

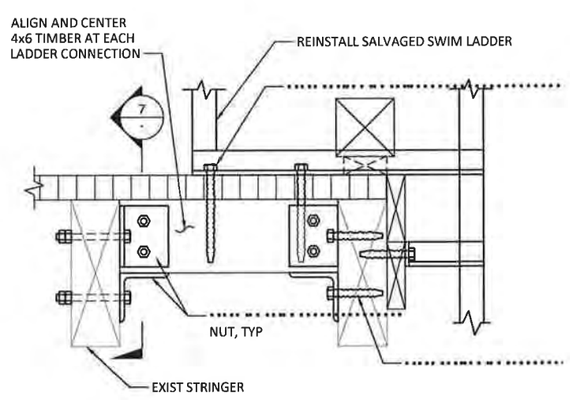

6 - **DETAIL - SWIM LADDER**
SCALE: 2" = 1'-0" (ADDITIVE ALTERNATIVE A)

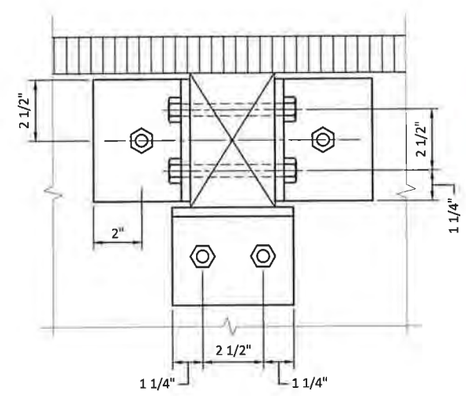

7 - **DETAIL - CONNECTION**
SCALE: 3" = 1'-0" (ADDITIVE ALTERNATIVE A)

PERMIT SET

ONE INCH
AT FULL SIZE, IF NOT ONE INCH SCALE ACCORDINGLY

ANCHOR QEA

CITY OF KIRKLAND WASHINGTON
123 Fifth Ave
Kirkland, WA 98033
(425) 587-3300

WSP
WSP USA Inc.
33301 9th Avenue South
Suite 300
Federal Way, WA 98003-2600
TEL: (206) 431-2300
FAX: (206) 431-2250

JOSEPH R. GALLOWAY, STATE OF WASHINGTON, 32898, REGISTERED PROFESSIONAL ENGINEER

REVISIONS

REV	DATE	BY	APP'D	DESCRIPTION

DESIGNED BY: C. ENG
DRAWN BY: J. MENDENHALL
CHECKED BY: C. ENG
APPROVED BY: J. GALLOWAY
SCALE: AS NOTED
DATE: September 2020

DAVID E. BRINK PARK SHORELINE RENOVATION
90% DESIGN

STRUCTURAL SECTIONS
SHEET 2

S-5
BNR20-06182
Page 11 of 12
SHEET NO 22 OF 23

R:\USFOW1100\Projects\2019\A19.0173.00\CADD\Dwgs\01_S05.dwg Layout1
Sep 01, 2020 2:08pm USMA75421

City of Kirkland
Reviewed by T Elder
02/10/2021

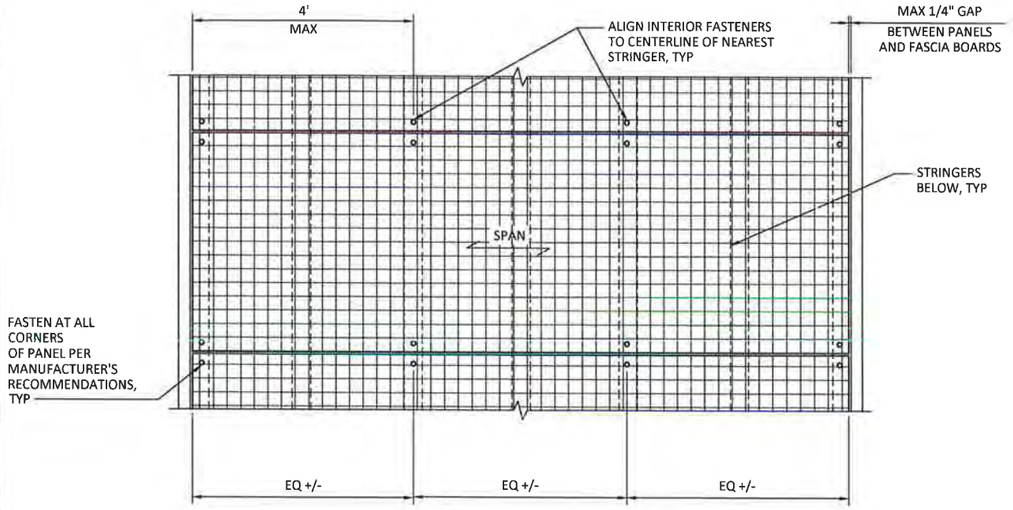

1 S-2 **DETAIL - TYPICAL GRATING**
SCALE: 3/4" = 1'-0" (ADDITIVE ALTERNATIVE A)

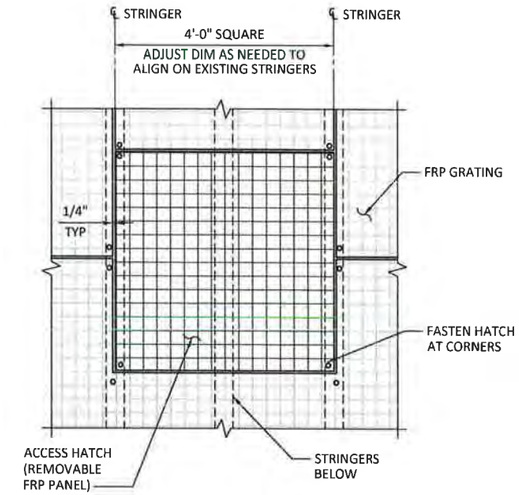

2 S-2 **DETAIL - ACCESS HATCH GRATING**
SCALE: 3/4" = 1'-0" (ADDITIVE ALTERNATIVE A)

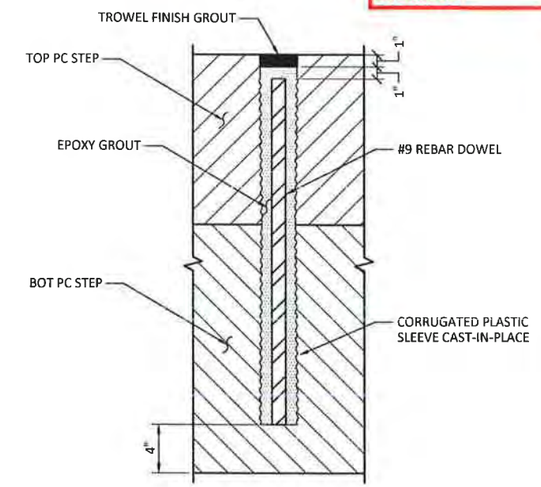

3 S-3 **DETAIL - PC ALIGNMENT DOWEL**
SCALE: 2" = 1'-0"

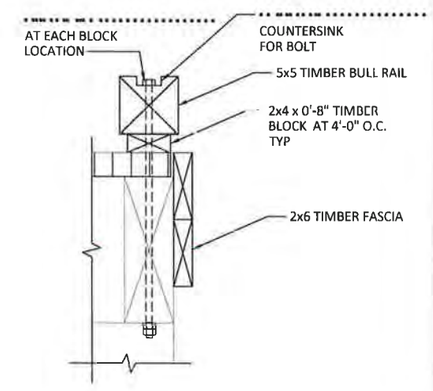

4 S-4 **DETAIL - BULL RAIL**
SCALE: 2" = 1'-0" (ADDITIVE ALTERNATIVE A)

ONE INCH
AT FULL SIZE, IF NOT ONE INCH SCALE ACCORDINGLY

PERMIT SET

ANCHOR QEA

CITY OF KIRKLAND WASHINGTON
123 Fifth Ave
Kirkland, WA 98033
(425) 587-3300

WSP USA Inc.
33301 9th Avenue South
Suite 300
Federal Way, WA 98003-2600
TEL: (206) 431-2300
FAX: (206) 431-2250

JOSEPH R. GALLOWAY — STATE OF WASHINGTON — 32808 — REGISTERED PROFESSIONAL ENGINEER

REVISIONS				
REV	DATE	BY	APP'D	DESCRIPTION

DESIGNED BY: C ENG
DRAWN BY: J MENDENHALL
CHECKED BY: C ENG
APPROVED BY: J GALLOWAY
SCALE: AS NOTED
DATE: September 2020

DAVID E. BRINK PARK SHORELINE RENOVATION
90% DESIGN

STRUCTURAL SECTIONS
SHEET 3

S-6
BNR20-06182
Page 12 of 12

SHEET NO 23 OF 23

Sep 01, 2020 2:08pm USJMC75471 R:\USFCW1001\Projects\2019\A19.0173.00\CADD\Dwgs\01_S\S-6.dwg Layout1

APPENDIX B:
GEOTECHNICAL REPORT

City of Kirkland

1201 3rd Avenue, Suite 2600
Seattle, Washington 98101
206.287.9130

ANCHOR QEA

Memorandum

June 29, 2020

To: Brian Baker, Public Works Capital Projects Coordinator, City of Kirkland

From: John Laplante, PE, and Sam Giannakos, EIT, Anchor QEA

cc: Anna Spooner, PLA, Anchor QEA

Re: David E. Brink Park Shoreline Renovation
Geotechnical Engineering Evaluation Memorandum: Slope Stability

Introduction

David E. Brink Park is located on the eastern shoreline of Lake Washington in Kirkland, Washington (Figure 1). The park is located on a slope that grades upward from the edge of the lake to the western side of Lake Street South. The toe of the slope in the park is separated from Lake Washington by a concrete bulkhead that is failing in several areas, resulting in erosion of the landward subsurface and causing the sidewalk to crack and settle. The park is to be renovated and the damaged portions of the bulkhead replaced.

This memorandum summarizes the geotechnical investigations performed by Anchor QEA at David E. Brink Park and the geotechnical engineering analyses that were conducted to assess the stability of slope grades following construction of the renovated shoreline.

This memorandum includes the following:

- Subsurface conditions observed from soil boring explorations
- Discussion and interpretation of laboratory results
- Geotechnical engineering evaluations and recommendations for shoreline renovation

Geotechnical Investigation

Subsurface Investigations

Subsurface conditions were investigated by Anchor QEA on March 16 and May 22, 2020. The exploration and testing involved the following:

- Drill two hollow-stem auger borings at the top of the slope adjacent to Lake Street South (Figure 2).
- Advance four hand auger borings within the extents of the southern excavation footprint to collect soils for chemistry testing, as described in the supplemental *Geotechnical Engineering Evaluation Memorandum* (Anchor QEA [forthcoming]).
- Visually classify soils within each exploration.
- Collect representative soil samples and submit for geotechnical laboratory testing.

The specific number, location, and depth of explorations were selected by Anchor QEA based upon the proposed project limits, site access, and approved scope of work. The boring locations are depicted in Figure 2. These borings were used to develop soil profiles and provided samples for laboratory testing. The soil boring logs are provided in Attachment 1. Laboratory results for geotechnical testing are provided in Attachment 2.

Investigations performed in March 2020 involved drilling two boreholes (designated DB-B-01 and DB-B-02) using a hollow-stem auger drill rig to a minimum depth of 40 feet. For seismic consideration, one borehole was advanced to a depth of 75 feet. Standard Penetration Tests (SPTs) were performed at 5-foot depth intervals at each of the two borings. Representative samples were collected from unique soil lithologies within each boring and submitted to Materials Testing & Consulting, Inc for further geotechnical classification. The standard penetration resistance (N-value) was recorded for each sample interval and was calculated as the total number of blows needed (using a 140-pound hammer falling a distance of 30 inches) for the sampler to penetrate the final 12 inches of an 18-inch sampling interval.

The investigation performed in May 2020 involved the advancement of four hand auger borings (designated DB-HA), following the cardinal direction within the proposed footprint of the excavation for a sand beach at the south side of the park. Each boring was advanced until refusal, with final depth ranging between 2.5 and 4.5 feet. Samples were collected from each hand auger boring for further analysis as detailed in the *Geotechnical Engineering Evaluation Memorandum*.

Subsurface Soil Profile

The following is a description of the generalized subsurface soil profile at the locations where geotechnical borings were performed. The key characteristics of the major soil units encountered during the investigation are described from the ground surface downward.

Surface Soil. The surface layer consists of topsoil (fill), ranging in thickness from 0 to 1.6 feet thick. Typically, this layer consists of damp, dark brown, sandy silt with moderate organic material, overlaid with sod.

Silt. The major subsurface lithological unit discovered was silt beneath the topsoil. The silt ranged from very stiff to hard, brown to gray, and ranged in moisture content from 13.9% to 23.5%. Atterberg limits for samples collected within the silt had an average liquid limit of 30% and an average plastic limit of 22%. The average N-value in this silt was 32. Based on measured blow counts, this unit is interpreted to be glacially overridden.

Silty Sand. Silty sand was encountered in large layers within silt. The sand was very dense, light brown to gray, and ranged in moisture content from 9.1% to 18.7%.

Table 1 summarizes the geologic profile observed in the explorations performed in March 2020 and May 2020.

Table 1
Subsurface Soil Profiles

Boring	Total Depth of Boring (feet)	Depth Range of Soil Units (feet)		
		Surface Soil (Fill)	Silt	Sandy Silt
DB-B-01	76.5	0–1.0	1.0–6.0, 16.5–26, 30.3–76.5	6.0–16.5, 26–30.3
DB-B-02	41.5	0–1.0	1.0–6.2, 10.0–41.5	6.2–10.0
DB-HA-NE	3.0	0–1.0	1.0–3.0	NA
DB-HA-NW	2.5	0–1.5	1.5–2.5	NA
DB-HA-SE	4.5	0–2.0	2.5–4.5	NA
DB-HA-SW	2.5	0–1.0	1.0–2.5	NA

Note:
NA: not applicable; unit not observed

Groundwater

The depth to groundwater was not directly observed during the exploration program, and piezometers were not installed. Soils observed in hand auger samples appeared to be wetter at approximately 3 feet below ground surface, which corresponds with the water elevation in Lake Washington at the time of exploration. It is presumed that this groundwater level fluctuates and is influenced by the lake elevation.

Historical geotechnical borings housed in the Washington Department of Natural Resources online geologic library indicate that groundwater was observed in the upland at a range of 2 to 5 feet below ground surface.

Geotechnical Engineering Evaluation

The following subsections provide a summary of Anchor QEA's geotechnical engineering evaluations and recommendations.

Slope Stability

Geotechnical evaluations were performed to assess whether the proposed park renovations could affect the stability of Lake Street South. Slope stability modeling was performed using Rocscience Slide2 9.0© software, which uses limit equilibrium methods of analysis.

The target factors of safety consider the intended use of the site or structure, the potential consequences of failure, and the limitations and understanding of the anticipated subgrade soils.

Target factors of safety of 1.5 for the long-term (drained) condition and 1.1 for seismic conditions were considered appropriate for use in this analysis based on U.S. Army Corps of Engineers-recommended slope stability guidelines (USACE 2003).

Geologic cross sections were developed using soil classifications and depth intervals as recorded during the field investigation and modified where appropriate by laboratory data. These cross sections are shown in Figures 3a and 3b. Model input soil parameters displayed in Table 2 were estimated from correlations to data obtained during the field investigation and laboratory results.

Table 2
David E. Brink Park Model Soil Properties

Soil Type	Total Unit Weight γ (pcf)	Undrained Condition		Drained Condition	
		Cohesion (psf)	Internal Friction Angle ϕ (°)	Cohesion (psf)	Internal Friction Angle ϕ (°)
Silt (ML)	95	2200	--	--	30
Silty Sand (SM)	110	--	34	--	34
Sand Fill	120	--	32	--	32
Habitat Gravel	140	--	35	--	35

Notes:
--: Not applicable to model condition
pcf: pound per cubic foot
psf: pound per square foot

Both the Spencer (1967) and GLE Morgenstern and Price (1965) analysis methods were used to compute the factor of safety. These methods satisfy both force and moment equilibrium for the slip surface being evaluated. The limit equilibrium method calculates the factors of safety by comparing the "driving" forces for an assumed failure wedge with the "resisting" forces provided by the shear strength of the soils along the assumed failure surface.

Seismic Evaluation

Anchor QEA's seismic evaluation was conducted using the American Society of Civil Engineers Hazard Assessment Tool (ASCE 2017), as documented in Standard ASCE 7-16, *Minimum Design Loads and Associated Criteria for Buildings and Other Structures* (ASCE 2016).

The Hazard Assessment Tool provides the Maximum Considered Earthquake (MCE) peak ground acceleration (PGA) corresponding to the site class for a given location. For inputs to the Hazard Assessment Tool, the site soil classification was determined, based on recently obtained site investigations, to be a Class D for stiff soils having average SPT blow counts of 15 to 30. In addition,

an occupancy category of 'I' was selected, representing structures with no human occupancy (ASCE 2016).

Attachment 3 provides the output from the Hazard Assessment Tool's calculated seismic response of the site. From this report, the applicable PGA for site design use was determined to be 0.597 gravity (g).

Slope Stability Modeling Results

Slope stability was modeled for two conditions: long-term (drained) soil conditions, and seismic. Modeling was conducted for both the existing shoreline and post-construction (renovated) shoreline. Results of stability modeling for the both the existing shoreline and the proposed renovated shoreline are shown in Table 3.

Table 3
Shoreline Slope Stability Results

Boring Reference	Slope	Long-Term Factor of Safety	Long-Term Factor of Safety		Seismic Factor of Safety	
			Existing Slope	Renovated Shoreline	Existing Slope	Renovated Shoreline
DB-B-01	South	2.3	2.3	2.2	1.6	1.6
DB-B-02	North	2.6	2.6	2.7	2.4	2.4

Discussion of Results

Overall, the proposed renovation design was determined to exceed the target factors of safety. Renovations are not anticipated to affect the overall global stability of the site, and the stability of Lake Street is not expected to be materially affected by the proposed changes to the park shoreline.

References

Anchor QEA [forthcoming]. Geotechnical Engineering Evaluation Memorandum, David E. Brink Park Shoreline Renovation.

ASCE (American Society of Civil Engineers), 2016. *Minimum Design Loads and Associated Criteria for Buildings and Other Structures (ASCE/SEI 7-16)*.

ASCE, 2017. ASCE 7 Hazard Loads Tool. Online resource available at https://asce7hazardtool.online/

Morgenstern, N.R., and V.E. Price, 1965. "The analysis of the stability of general slip surfaces." *Geotechnique* 15(1):79–93.

Rocscience, 2020. SLIDE2 2020 software Version 9.0: 2-D Limit Equilibrium Slope Stability for Soil and Rock Slopes, User's Guide. Rocscience Software, Inc., Toronto, Ontario, Canada.

Spencer, E., 1967. "A method of analysis of the stability of embankments assuming parallel inter-slice forces." *Geotechnique* 17(1):11–26.

USACE (U.S. Army Corps of Engineers), 2003. *Slope Stability*. EM 1110-2-1902. October 2003.

Figures

SOURCE: Aerial from ESRI
HORIZONTAL DATUM: Washington State Plane North Zone, North American Datum of 1983 (NAD83), U.S. Survey Feet

0 2000
Feet

Publish Date: 2020/06/11 4:42 PM | User: cyard
Filepath: K:\Projects\1006-City of Kirkland\David Brink Park Shoreline Renovation\1006-RP-007 (Vicinity).dwg Figure 1

ANCHOR QEA

Figure 1
Vicinity Map

David Brink Park Shoreline Renovation - Geotechnical Memorandum
City of Kirkland Parks and Community Services and Public Works Departments

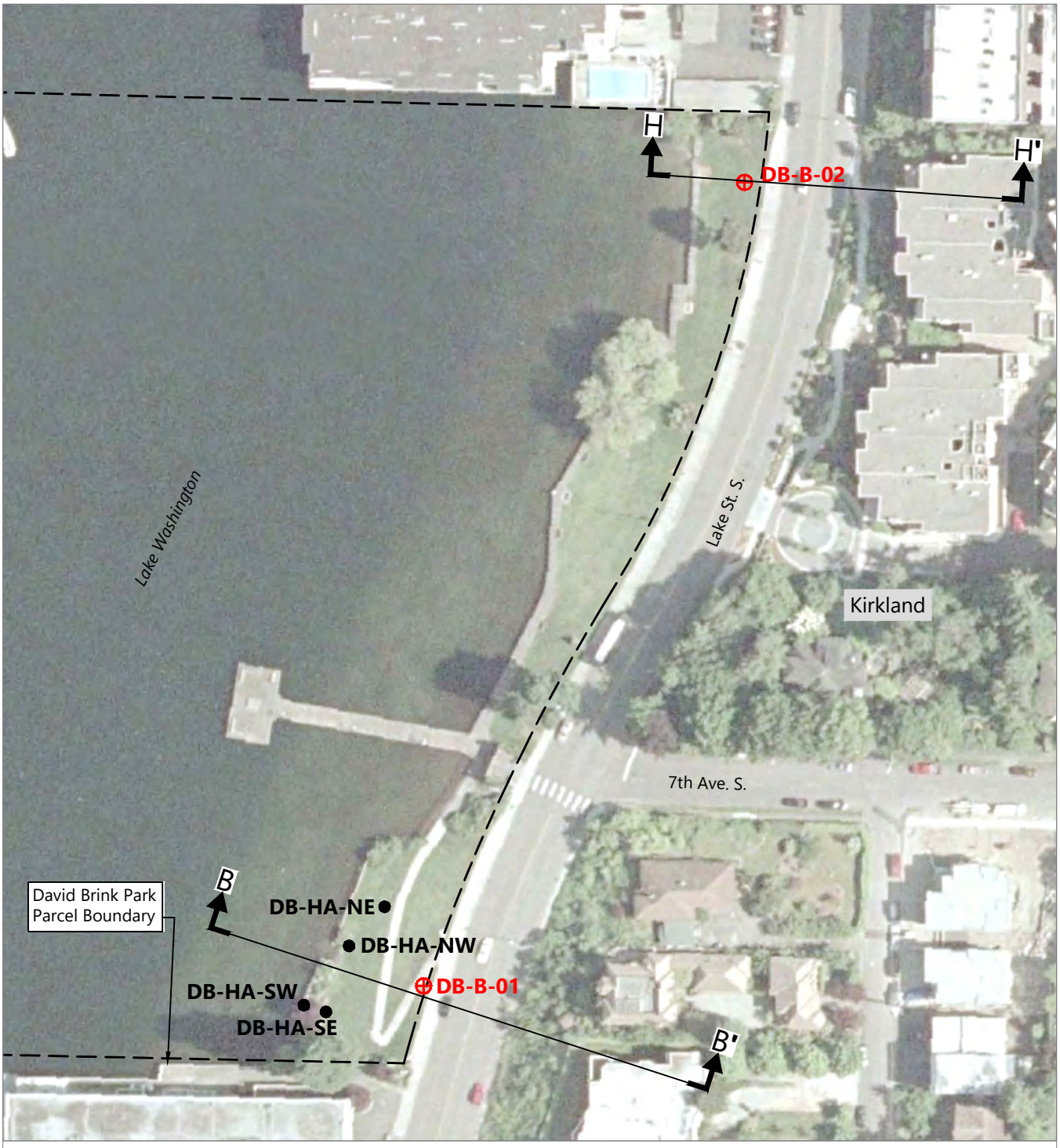

SOURCE: Esri et al.
HORIZONTAL DATUM: Washington State Plane North Zone, North American Datum of 1983 (NAD83), U.S. Survey Feet
LEGEND:

- **DB-HA-NW** Hand Auger Boring Locations (May 2020)
- **DB-B-01** Hollow Stem Auger Boring Locations (March 2020)

0 100
Feet

Publish Date: 2020/06/11 4:50 PM | User: cyard
Filepath: K:\Projects\1006-City of Kirkland\David Brink Park Shoreline Renovation\1006-RP-008 (Site).dwg Figure 2

ANCHOR QEA

Figure 2
Site Map

David Brink Park Shoreline Renovation - Geotechnical Memorandum
City of Kirkland Parks and Community Services and Public Works Departments

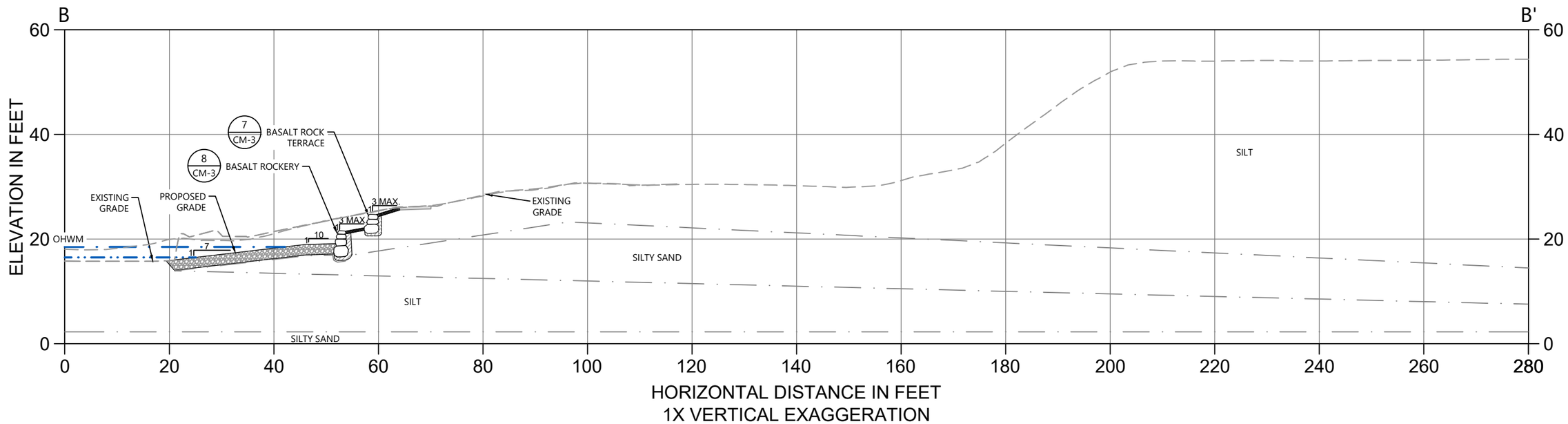

SOURCE: Esri et al.
HORIZONTAL DATUM: Washington State Plane North Zone, North American Datum of 1983 (NAD83), U.S. Survey Feet

0 20
Feet

Publish Date: 2020/06/11 5:12 PM | User: cyard
Filepath: K:\Projects\1006-City of Kirkland\David Brink Park Shoreline Renovation\1006-RP-008 (Site).dwg Figure 3A

ANCHOR QEA

Figure 3A
Cross Section B-B'

David Brink Park Shoreline Renovation - Geotechnical Memorandum
City of Kirkland Parks and Community Services and Public Works Departments

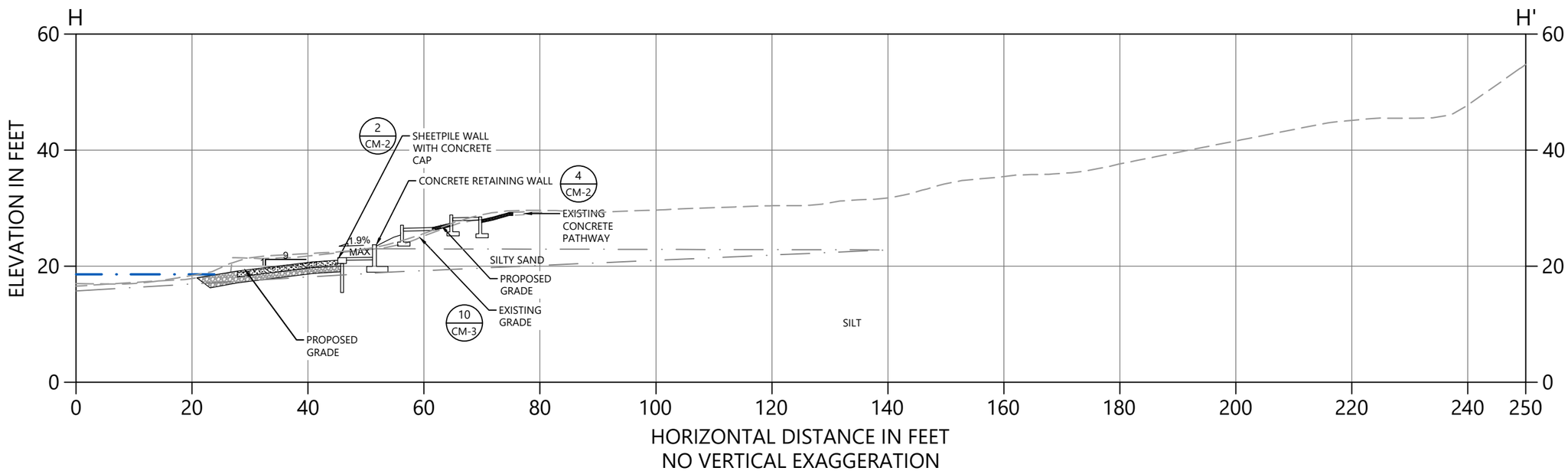

SOURCE: Esri et al.
HORIZONTAL DATUM: Washington State Plane North Zone, North American Datum of 1983 (NAD83), U.S. Survey Feet

0 20
Feet

Publish Date: 2020/06/11 5:14 PM | User: cyard
Filepath: K:\Projects\1006-City of Kirkland\David Brink Park Shoreline Renovation\1006-RP-008 (Site).dwg Figure 3B

ANCHOR QEA

Figure 3B
Cross Section H-H'

David Brink Park Shoreline Renovation - Geotechnical Memorandum
City of Kirkland Parks and Community Services and Public Works Departments

Attachment 1
Boring Logs

Soil Boring Log
DB-B-01

Project: David Brink Park Shoreline Renovation	Location: Kirkland, Washington	Collection Date: 03/16/2020
Project #: 191006-01.02	N/LAT: N/A E/LONG: N/A	Total Depth (ft): **76.5**
Client: City of Kirkland	Observed GW (bgs): N/A	Hammer: 140-lb Auto Hammer
Method: Hollow Stem Auger	Ground Surface Elevation (ft): N/A	Hammer Efficiency: Unknown
Contractor: Holt Services Inc.	Sampler(s): 1.375 ID x 1.5 OD Split Spoon/ 2 foot Shelby Tube	Logged By: Sam Giannakos

Depth (ft)	Samples	Values Less than 1	Uncorrected Standard Penetration Resistance (blows per foot) and Moisture Content (%) (1 2 5 10 20 50 100)	Lithology	Soil Description Samples and descriptions are in recovered depths. Classification scheme: USCS	Pocket Pen. (TSF)	Mini Vane (TSF)
0					ML: 0.0-6.0 ft: Moist, very stiff, brown, slightly sandy, SILT (ML).		
5	DB-B-01-5-6.5				SM: 6.2-10 ft: Dry to damp, medium dense, light brown, poorly graded, silty SAND (SM). Occasional gravel pieces (subrounded).		
10	DB-B-01-10-20				SM: 10-16.5 ft: Dry, very dense, gray, fine, silty SAND (SM). Trace gravel pieces (subrounded).		
15					ML: 16.5-26 ft: Dry, hard, dark gray, SILT (ML).		
20							

ANCHOR QEA
1201 3rd Avenue, Suite #2600
Seattle, WA 98101
206-287-3347

▲ SPT N-Value
● Moisture Content (%)

Notes:

Soil Boring Log
DB-B-01

Project: David Brink Park Shoreline Renovation	Location: Kirkland, Washington	Collection Date: 03/16/2020
Project #: 191006-01.02	N/LAT: N/A E/LONG: N/A	Total Depth (ft): **76.5**
Client: City of Kirkland	Observed GW (bgs): N/A	Hammer: 140-lb Auto Hammer
Method: Hollow Stem Auger	Ground Surface Elevation (ft): N/A	Hammer Efficiency: Unknown
Contractor: Holt Services Inc.	Sampler(s): 1.375 ID x 1.5 OD Split Spoon/ 2 foot Shelby Tube	Logged By: Sam Giannakos

Depth (ft)	Samples	Values Less than 1	Uncorrected Standard Penetration Resistance (blows per foot) and Moisture Content (%) (1 2 5 10 20 50 100)	Lithology	Soil Description Samples and descriptions are in recovered depths. Classification scheme: USCS	Pocket Pen. (TSF)	Mini Vane (TSF)
20	DB-B-01-20-26				ML: 16.5-26 ft: Dry, hard, dark gray, SILT (ML). @20.6-20.9 ft: Lense of damp, very dense, dark gray, poorly graded SAND with SILT (SP-SM)		
25	DB-B-01-26-30.3				SM: 26-30.3 ft: Damp to moist, dense, dark gray, poorly graded, silty SAND (SM).		
30	DB-B-01-30.3-76.5				ML: 30.3-76.5 ft: Damp, hard, gray clayey SILT (ML).		
35							
40							

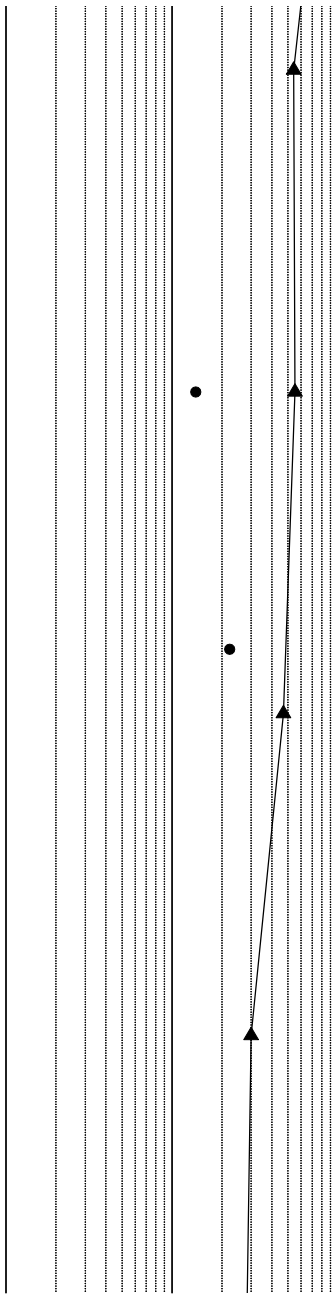

ANCHOR QEA
1201 3rd Avenue, Suite #2600
Seattle, WA 98101
206-287-3347

▲ SPT N-Value
● Moisture Content (%)

Notes:

Soil Boring Log
DB-B-01

Project: David Brink Park Shoreline Renovation	Location: Kirkland, Washington	Collection Date: 03/16/2020
Project #: 191006-01.02	N/LAT: N/A E/LONG: N/A	Total Depth (ft): **76.5**
Client: City of Kirkland	Observed GW (bgs): N/A	Hammer: 140-lb Auto Hammer
Method: Hollow Stem Auger	Ground Surface Elevation (ft): N/A	Hammer Efficiency: Unknown
Contractor: Holt Services Inc.	Sampler(s): 1.375 ID x 1.5 OD Split Spoon/ 2 foot Shelby Tube	Logged By: Sam Giannakos

Depth (ft)	Samples	Values Less than 1	Uncorrected Standard Penetration Resistance (blows per foot) and Moisture Content (%) (1 2 5 10 20 50 100)	Lithology	Soil Description Samples and descriptions are in recovered depths. Classification scheme: USCS	Pocket Pen. (TSF)	Mini Vane (TSF)
40					ML: 30.3-76.5 ft: Damp, very stiff, gray clayey SILT (ML).		
45							
50							
55						4	1
60							

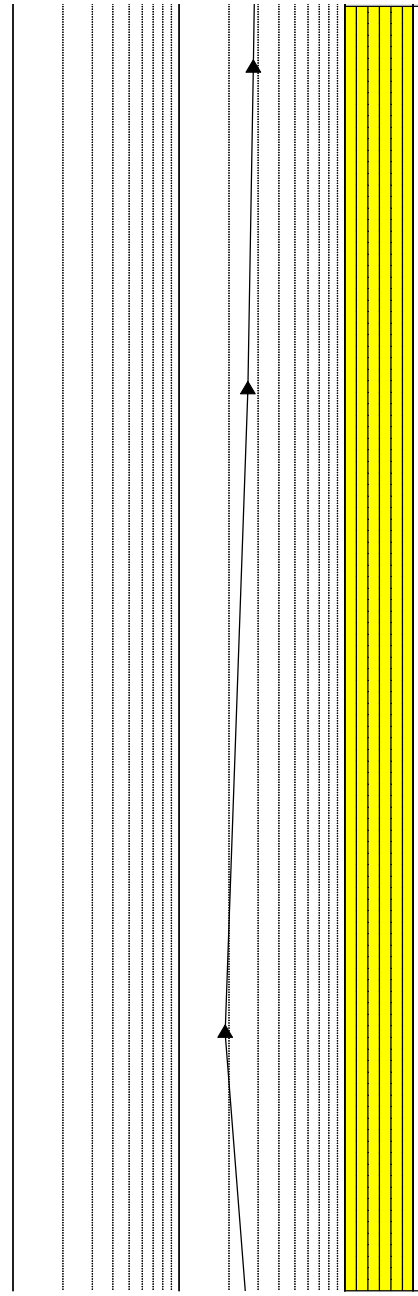

ANCHOR QEA
1201 3rd Avenue, Suite #2600
Seattle, WA 98101
206-287-3347

▲ SPT N-Value
● Moisture Content (%)

Notes:

Soil Boring Log
DB-B-01

Project: David Brink Park Shoreline Renovation	Location: Kirkland, Washington	Collection Date: 03/16/2020
Project #: 191006-01.02	N/LAT: N/A E/LONG: N/A	Total Depth (ft): **76.5**
Client: City of Kirkland	Observed GW (bgs): N/A	Hammer: 140-lb Auto Hammer
Method: Hollow Stem Auger	Ground Surface Elevation (ft): N/A	Hammer Efficiency: Unknown
Contractor: Holt Services Inc.	Sampler(s): 1.375 ID x 1.5 OD Split Spoon/ 2 foot Shelby Tube	Logged By: Sam Giannakos

Depth (ft)	Samples	Values Less than 1	Uncorrected Standard Penetration Resistance (blows per foot) and Moisture Content (%) 1 2 5 10 20 50 100	Lithology	Soil Description Samples and descriptions are in recovered depths. Classification scheme: USCS	Pocket Pen. (TSF)	Mini Vane (TSF)
60					ML: 30.3-76.5 ft: Damp, very stiff, gray clayey SILT (ML).		
65							
70							
75					End of boring @76.5 ft.		
80							

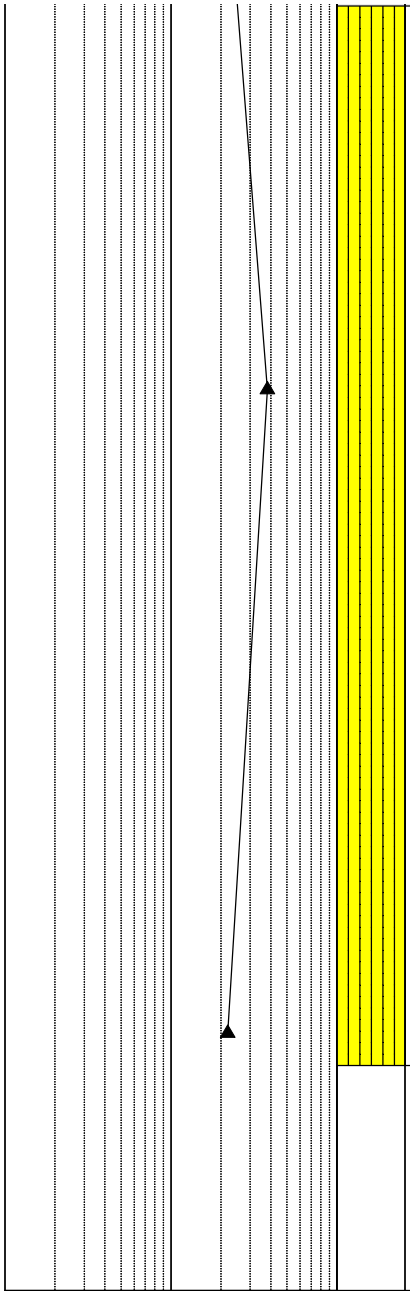

ANCHOR QEA
1201 3rd Avenue, Suite #2600
Seattle, WA 98101
206-287-3347

△ SPT N-Value
● Moisture Content (%)

Notes:

Soil Boring Log
DB-B-02

Project: David Brink Park Shoreline Renovation	Location: Kirkland, Washington	Collection Date: 03/16/2020
Project #: 191006-01.02	N/LAT: N/A E/LONG: N/A	Total Depth (ft): **41.5**
Client: City of Kirkland	Observed GW (bgs): N/A	Hammer: 140-lb Auto Hammer
Method: Hollow Stem Auger	Ground Surface Elevation (ft): N/A	Hammer Efficiency: Unknown
Contractor: Holt Services Inc.	Sampler(s): 1.375 ID x 1.5 OD Split Spoon/ 2 foot Shelby Tube	Logged By: Sam Giannakos

Depth (ft)	Samples	Values Less than 1	Uncorrected Standard Penetration Resistance (blows per foot) and Moisture Content (%) (1 2 5 10 20 50 100)	Lithology	Soil Description Samples and descriptions are in recovered depths. Classification scheme: USCS	Pocket Pen. (TSF)	Mini Vane (TSF)
0					ML: 0-6.2 ft: Damp, very stiff, brown, slightly sandy, SILT (ML).		
5	DB-B-02-5-6.5						
					SM: 6.2-10 ft: Dry to damp, medium dense, light brown, poorly graded, silty SAND (SM). Occasional gravel pieces.		
10	DB-B-02-10-41.5				ML: 10-41.5 ft: Dry, very stiff, dark gray, clayey SILT (ML).		
15							
20	DB-B-02-20-21.5						
25							

ANCHOR QEA
1201 3rd Avenue, Suite #2600
Seattle, WA 98101
206-287-3347

▲ SPT N-Value
● Moisture Content (%)

Notes:

Soil Boring Log
DB-B-02

Project: David Brink Park Shoreline Renovation	Location: Kirkland, Washington	Collection Date: 03/16/2020
Project #: 191006-01.02	N/LAT: N/A E/LONG: N/A	Total Depth (ft): **41.5**
Client: City of Kirkland	Observed GW (bgs): N/A	Hammer: 140-lb Auto Hammer
Method: Hollow Stem Auger	Ground Surface Elevation (ft): N/A	Hammer Efficiency: Unknown
Contractor: Holt Services Inc.	Sampler(s): 1.375 ID x 1.5 OD Split Spoon/ 2 foot Shelby Tube	Logged By: Sam Giannakos

Depth (ft)	Samples	Values Less than 1	Uncorrected Standard Penetration Resistance (blows per foot) and Moisture Content (%) 1 2 5 10 20 50 100	Lithology	Soil Description Samples and descriptions are in recovered depths. Classification scheme: USCS	Pocket Pen. (TSF)	Mini Vane (TSF)
25					ML: 10-41.5 ft: Dry, very stiff, dark gray, clayey SILT (ML).		
30							
35							
40							
					End of boring @ 41.5 feet.		
45							
50							

ANCHOR QEA
1201 3rd Avenue, Suite #2600
Seattle, WA 98101
206-287-3347

▲ SPT N-Value
● Moisture Content (%)

Notes:

Boring Location:	Hand Auger DB-HA-NW Date 5/22/20 Sheet 1 of 1
North West within proporsed excavation on south end of park. One foot up-slope from blown out pocket beach at south end of the park	Job David Brink Park Shoreline Reno. Job No. 191006-01.02
	Logged By Sam Giannakos Weather Sunny
	Excavated By Anchor QEA
	Excavation Method Hand Auger
	Sampling Method Grab
	Bottom of Test Pit 2.5 feet GW (ATD)
Elevation: Datum:	

SIZE (%) G Max.	S Range	F Att. Limits	PID or other	SAMPLE Type	Number	SAMPLE RECOVERY	DESCRIPTION: Den., moist., color, minor, MAJOR CONSTITUENT, NON-SOIL SUBSTANCES: Odor, staining, sheen, scrag, slag, etc.
						0	0 feet: Damp, brown sod/topsoil, silt with sand.
						1	
							1.6 feet: Moist, light brown sandy SILT.
						2	2.0 feet: Grades to moist to wet, gray, sandy SILT.
							End of Boring at 2.5 feet.
						3	
						4	
						5	
						6	
						7	
						8	
						9	
						10	

Notes:

ANCHOR QEA

Boring Location:	Hand Auger DB-HA-NE	Date 5/22/20	Sheet 1 of 1
Approximately 25 feet upslope from the bulkhead, just west of the conrete pathway to the northern extent of the southern exacation.	Job David Brink Park Shoreline Reno.		Job No. 191006-01.02
	Logged By Sam Giannakos		Weather Sunny
	Excavated By Anchor QEA		
	Excavation Method Hand Auger		
	Sampling Method Grab		
Elevation: Datum:	Bottom of Test Pit 3.0 Feet	GW (ATD)	

SIZE (%) G Max.	S Range	F Att. Limits	PID or other	SAMPLE Type	Number	SAMPLE RECOVERY	DESCRIPTION: Den., moist., color, minor, MAJOR CONSTITUENT, NON-SOIL SUBSTANCES: Odor, staining, sheen, scrag, slag, etc.
						0	0 feet: Damp, brown sod/topsoil, silt with sand.
						1	
						2	1.5 feet: Moist, light brown, sandy SILT.
						3	@2.9 feet: Dark black staining of material End of boring at 3.0 feet. Suspected gravel encountered
						4	
						5	
						6	
						7	
						8	
						9	
						10	

Notes:

ANCHOR QEA

Boring Location:	Hand Auger DB-HA-SW	Date 5/22/20	Sheet 1 of 1
South west within proporsed excavation on south end of park. Three feet landward of bulkhead within mulch/vegitated area at south boundary of park.	Job David Brink Park Shoreline Reno.		Job No. 191006-01.02
	Logged By Sam Giannakos		Weather Sunny
	Excavated By Anchor QEA		
	Excavation Method Hand Auger		
	Sampling Method Grab		
Elevation: Datum:	Bottom of Test Pit 2.5 Feet	GW (ATD)	

SIZE (%) G Max.	SIZE (%) S Range	SIZE (%) F Att. Limits	PID or other	SAMPLE Type	SAMPLE Number	SAMPLE RECOVERY	DESCRIPTION: Den., moist., color, minor, MAJOR CONSTITUENT, NON-SOIL SUBSTANCES: Odor, staining, sheen, scrag, slag, etc.
						0	0 feet: Damp, brown sod/topsoil, silt with sand.
						1	1 foot: damp,brown, SILT with gravel. Gravel is fine, rounded.
						2	@2.0 feet: Grade to silt, no gravel.
							End of boring at 2.5 feet. Suspected layer of gravel encountered.
						3	
						4	
						5	
						6	
						7	
						8	
						9	
						10	

Notes:

ANCHOR QEA

Boring Location:	Hand Auger DB-HA-SE	Date 5/22/20	Sheet 1 of 1
South East of proporsed excavation on south end of park. One foot upslope from mulch/vegitated area at south boundary of park.	Job David Brink Park Shoreline Reno.		Job No. 191006-01.02
	Logged By Sam Giannakos		Weather Sunny
	Excavated By Anchor QEA		
	Excavation Method Hand Auger		
	Sampling Method Grab		
	Bottom of Test Pit 4.0 feet	GW (ATD)	
Elevation:	Datum:		

SIZE (%) G Max.	SIZE (%) S Range	SIZE (%) F Att. Limits	PID or other	SAMPLE Type	SAMPLE Number	SAMPLE RECOVERY	DESCRIPTION: Den., moist., color, minor, MAJOR CONSTITUENT, NON-SOIL SUBSTANCES: Odor, staining, sheen, scrag, slag, etc.
						0	0 feet: Damp, dark brown organic SILT. 0.3 feet of mulch overlaying silt.
						1	
						2	2.0 feet: Wet, gray, SILT. @2.4 feet: Water table encountered.
						3	
						4	
						5	End of boring at 4.5 feet.
						6	
						7	
						8	
						9	
						10	

Notes: Just beneath water table, hand auger was esily forced to a depth of about 4 feet. Suspected pocket in subsurface.

ANCHOR QEA

Attachment 2
Laboratory Report

Materials Testing & Consulting, Inc.

Geotechnical Engineering • Special Inspection • Materials Testing • Environmental Consulting

Client:	Anchor QEA	**Date:**	April 6, 2020
Address:	720 Olive Way, Suite 1900	**Project:**	Q.C. - David Brink Park Shoreline 2020
	Seattle, WA 98101	**Project #:**	20S051-01
Attn:	Casey Janisch	**Sample #:**	B20-0334
Date Revised:		**Date Sampled:**	March 16, 2020

As requested MTC, Inc. has performed the following test(s) on the sample referenced above. The testing was performed in accordance with current applicable AASHTO or ASTM standards as indicated below. The results obtained in our laboratory were as follows below or on the attached pages:

	Test(s) Performed:	Test Results		Test(s) Performed:	Test Results
X	Sieve Analysis	Please See Attached Reports		Sulfate Soundness	
	Proctor			Bulk Density & Voids	
	Sand Equivalent			WSDOT Degradation	
	Fracture Count		**X**	Specific Gravity, Soils	Please See Attached Reports
X	Moisture Content	Please See Attached Report			
	Specific Gravity, Coarse				
	Specific Gravity, Fine				
	Hydrometer Analysis				
X	Atterberg Limits	Please See Attached Reports			
	Asphalt Extraction/Gradation				
	Rice Density				

If you have any questions concerning the test results, the procedures used, or if we can be of any further assistance please call on us at the number below.

Respectfully Submitted,
Meghan Blodgett-Carrillo
WABO Supervising Laboratory Technician

Materials Testing & Consulting, Inc.

Geotechnical Engineering • Special Inspection • Materials Testing • Environmental Consulting

Project: Q.C. - David Brink Park Shoteline 2020
Project #: 20S051-01
Date Received: March 31, 2020
Date Tested: April 2, 2020

Client: Anchor QEA
Sampled by: Client
Tested by: A. Eifrig

Moisture Content - ASTM C-566, ASTM D-2216 & AASHTO T-265

Sample #	Location	Tare	Wet + Tare	Dry + Tare	Wgt. Of Moisture	Wgt. Of Soil	% Moisture
B20-0333	DB-B-01-5-6.5	415.4	743.7	711.6	32.1	296.2	10.8%
B20-0334	DB-B-01-10-16.5	718.8	2603.8	2446.8	157.0	1728.0	9.1%
B20-0335	DB-B-01-20-26	415.3	2120.7	1852.6	268.1	1437.3	18.7%
B20-0336	DB-B-01-26-30.3	694.4	1093.6	1045.0	48.6	350.6	13.9%
B20-0337	DB-B-01-30.3-76.5	379.6	1363.9	1184.1	179.8	804.5	22.3%
B20-0338	DB-B-02-5-6.5	414.3	752.9	708.7	44.2	294.4	15.0%
B20-0339	DB-B-02-10-41.5	378.2	1085.0	950.3	134.7	572.1	23.5%

All results apply only to actual locations and materials tested. As a mutual protection to clients, the public and ourselves, all reports are submitted as the confidential property of clients, and authorization for publication of statements, conclusions or extracts from or regarding our reports is reserved pending our written approval.

Reviewed by: Meghan Blodgett-Carrillo

Corporate ~ 777 Chrysler Drive • Burlington, WA 98233 • Phone (360) 755-1990 • Fax (360) 755-1980

Regional Offices: Olympia ~ 360.534.9777 Bellingham ~ 360.647.6111 Silverdale ~ 360.698.6787 Tukwila ~ 206.241.1974

Visit our website: www.mtc-inc.net

Materials Testing & Consulting, Inc.

Geotechnical Engineering • Special Inspection • Materials Testing • Environmental Consulting

Sieve Report

Project: Q.C. - David Brink Park Shoreline 2020
Project #: 20S051-01
Client: Anchor QEA
Source: DB-B-01-10-16.5
Sample#: B20-0334

Date Received: 31-Mar-20
Sampled By: Client
Date Tested: 2-Apr-20
Tested By: A. Eifrig

ASTM D-2487 Unified Soils Classification System
SM, Silty Sand
Sample Color:
Gray

ACCREDITED
Certificate #: 1366.01, 1366.02 & 1366.04

ASTM D-2216, ASTM D-2419, ASTM D-4318, ASTM D-5821

Specifications
No Specs
Sample Meets Specs ? N/A

$D_{(5)}$ = 0.012 mm	% Gravel = 11.6%	Coeff. of Curvature, C_C = 0.63
$D_{(10)}$ = 0.024 mm	% Sand = 56.7%	Coeff. of Uniformity, C_U = 14.34
$D_{(15)}$ = 0.035 mm	% Silt & Clay = 31.7%	Fineness Modulus = 1.94
$D_{(30)}$ = 0.071 mm	Liquid Limit = n/a	Plastic Limit = n/a
$D_{(50)}$ = 0.238 mm	Plasticity Index = n/a	Moisture %, as sampled = 9.1%
$D_{(60)}$ = 0.339 mm	Sand Equivalent = n/a	Req'd Sand Equivalent =
$D_{(90)}$ = 7.440 mm	Fracture %, 1 Face = n/a	Req'd Fracture %, 1 Face =
Dust Ratio = 25/54	Fracture %, 2+ Faces = n/a	Req'd Fracture %, 2+ Faces =

ASTM C-136, ASTM D-6913

Sieve Size US	Sieve Size Metric	Actual Cumulative Percent Passing	Interpolated Cumulative Percent Passing	Specs Max	Specs Min
12.00"	300.00		100%	100.0%	0.0%
10.00"	250.00		100%	100.0%	0.0%
8.00"	200.00		100%	100.0%	0.0%
6.00"	150.00		100%	100.0%	0.0%
4.00"	100.00		100%	100.0%	0.0%
3.00"	75.00		100%	100.0%	0.0%
2.50"	63.00		100%	100.0%	0.0%
2.00"	50.00	100%	100%	100.0%	0.0%
1.75"	45.00		100%	100.0%	0.0%
1.50"	37.50		99%	100.0%	0.0%
1.25"	31.50		98%	100.0%	0.0%
1.00"	25.00	98%	98%	100.0%	0.0%
3/4"	19.00	96%	96%	100.0%	0.0%
5/8"	16.00		95%	100.0%	0.0%
1/2"	12.50	93%	93%	100.0%	0.0%
3/8"	9.50	91%	91%	100.0%	0.0%
1/4"	6.30		89%	100.0%	0.0%
#4	4.75	88%	88%	100.0%	0.0%
#8	2.36		86%	100.0%	0.0%
#10	2.00	85%	85%	100.0%	0.0%
#16	1.18		76%	100.0%	0.0%
#20	0.850		73%	100.0%	0.0%
#30	0.600		70%	100.0%	0.0%
#40	0.425	69%	69%	100.0%	0.0%
#50	0.300		56%	100.0%	0.0%
#60	0.250		51%	100.0%	0.0%
#80	0.180		44%	100.0%	0.0%
#100	0.150	41%	41%	100.0%	0.0%
#140	0.106		36%	100.0%	0.0%
#170	0.090		34%	100.0%	0.0%
#200	0.075	31.7%	31.7%	100.0%	0.0%

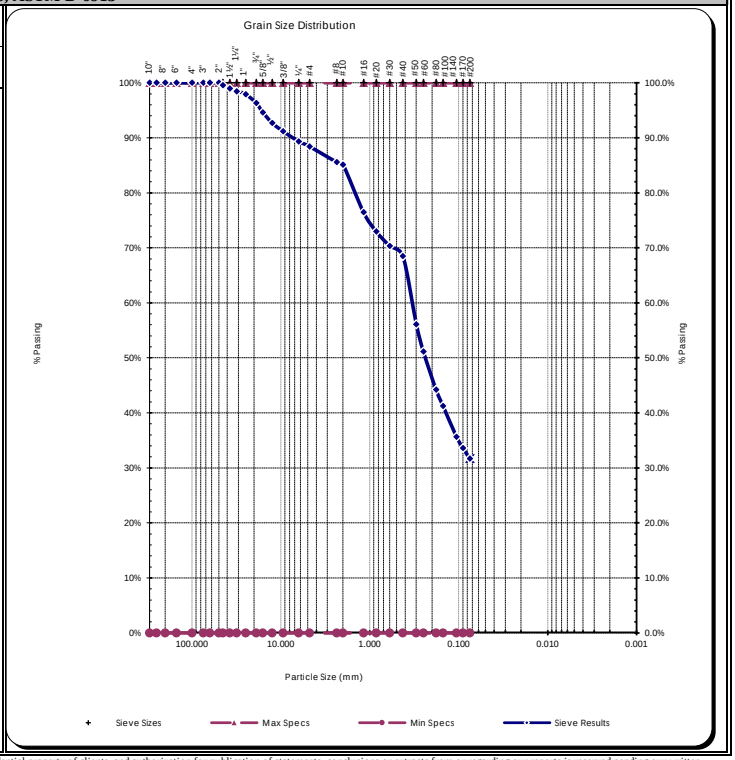

Copyright Spears Engineering & Technical Services PS, 1996-98

All results apply only to actual locations and materials tested. As a mutual protection to clients, the public and ourselves, all reports are submitted as the confidential property of clients, and authorization for publication of statements, conclusions or extracts from or regarding our reports is reserved pending our written approval.

Comments:

Reviewed by:

Meghan Blodgett-Carrillo

Corporate ~ 777 Chrysler Drive • Burlington, WA 98233 • Phone (360) 755-1990 • Fax (360) 755-1980

Regional Offices: Olympia ~ 360.534.9777 Bellingham ~ 360.647.6111 Silverdale ~ 360.698.6787 Tukwila ~ 206.241.1974

Visit our website: www.mtc-inc.net

Materials Testing & Consulting, Inc.

Geotechnical Engineering • Special Inspection • Materials Testing • Environmental Consulting

Sieve Report

Project: Q.C. - David Brink Park Shoreline 2020
Project #: 20S051-01
Client: Anchor QEA
Source: DB-B-01-26-30.3
Sample#: B20-0336

Date Received: 31-Mar-20
Sampled By: Client
Date Tested: 2-Apr-20
Tested By: A. Eifrig

ASTM D-2487 Unified Soils Classification System
SM, Silty Sand
Sample Color:
Gray

ACCREDITED
Certificate #: 1366.01, 1366.02 & 1366.04

ASTM D-2216, ASTM D-2419, ASTM D-4318, ASTM D-5821

Specifications
No Specs
Sample Meets Specs ? N/A

$D_{(5)}$ = 0.015 mm	% Gravel = 14.5%	Coeff. of Curvature, C_C = 1.30
$D_{(10)}$ = 0.030 mm	% Sand = 60.9%	Coeff. of Uniformity, C_U = 12.33
$D_{(15)}$ = 0.046 mm	% Silt & Clay = 24.6%	Fineness Modulus = 2.27
$D_{(30)}$ = 0.122 mm	Liquid Limit = n/a	Plastic Limit = n/a
$D_{(50)}$ = 0.291 mm	Plasticity Index = n/a	Moisture %, as sampled = 13.9%
$D_{(60)}$ = 0.376 mm	Sand Equivalent = n/a	Req'd Sand Equivalent =
$D_{(90)}$ = 15.801 mm	Fracture %, 1 Face = n/a	Req'd Fracture %, 1 Face =
Dust Ratio = 3/8	Fracture %, 2+ Faces = n/a	Req'd Fracture %, 2+ Faces =

ASTM C-136, ASTM D-6913

Sieve Size US	Sieve Size Metric	Actual Cumulative Percent Passing	Interpolated Cumulative Percent Passing	Specs Max	Specs Min
12.00"	300.00		100%	100.0%	0.0%
10.00"	250.00		100%	100.0%	0.0%
8.00"	200.00		100%	100.0%	0.0%
6.00"	150.00		100%	100.0%	0.0%
4.00"	100.00		100%	100.0%	0.0%
3.00"	75.00		100%	100.0%	0.0%
2.50"	63.00		100%	100.0%	0.0%
2.00"	50.00	100%	100%	100.0%	0.0%
1.75"	45.00		98%	100.0%	0.0%
1.50"	37.50		96%	100.0%	0.0%
1.25"	31.50		94%	100.0%	0.0%
1.00"	25.00	92%	92%	100.0%	0.0%
3/4"	19.00	92%	92%	100.0%	0.0%
5/8"	16.00		90%	100.0%	0.0%
1/2"	12.50	88%	88%	100.0%	0.0%
3/8"	9.50	88%	88%	100.0%	0.0%
1/4"	6.30		86%	100.0%	0.0%
#4	4.75	86%	86%	100.0%	0.0%
#8	2.36		83%	100.0%	0.0%
#10	2.00	82%	82%	100.0%	0.0%
#16	1.18		74%	100.0%	0.0%
#20	0.850		70%	100.0%	0.0%
#30	0.600		68%	100.0%	0.0%
#40	0.425	66%	66%	100.0%	0.0%
#50	0.300		51%	100.0%	0.0%
#60	0.250		45%	100.0%	0.0%
#80	0.180		37%	100.0%	0.0%
#100	0.150	33%	33%	100.0%	0.0%
#140	0.106		28%	100.0%	0.0%
#170	0.090		26%	100.0%	0.0%
#200	0.075	24.6%	24.6%	100.0%	0.0%

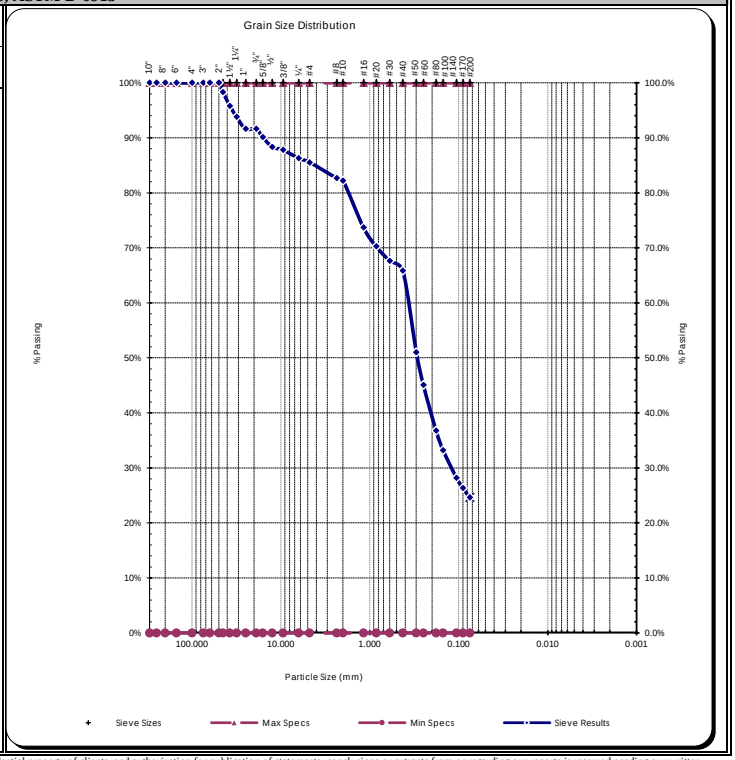

Copyright Spears Engineering & Technical Services PS, 1996-98

All results apply only to actual locations and materials tested. As a mutual protection to clients, the public and ourselves, all reports are submitted as the confidential property of clients, and authorization for publication of statements, conclusions or extracts from or regarding our reports is reserved pending our written approval.

Comments:

Reviewed by:

Meghan Blodgett-Carrillo

Materials Testing & Consulting, Inc.

Remember…. One test is worth a thousand expert opinions

Geotechnical Engineering • Special Inspection • Materials Testing

SOILS SPECIFIC GRAVITY ASTM D-854

Project:	Q.C. – David Brink Shoreline 2020	Client:	Anchor QEA
Project #:	20S051-01	Sampled by:	Client
Lab #:	B20-0336	Date Sampled:	3-16-20
Location/Source:	DB-B-01-26-30.3	Tested by:	M. Carrillo
Description:	SM, Silty Sand	Date Tested:	4-3-20
Equipment Used:	CA-017, SA-050, MI-007, SA-028		

Procedures:

1.) Place at least 25 to 50 grams of the wet soils into the 100mL volumetric flask. Fill the flask about 75% full with water. Place the flask with soils and water under a vacuum (maximum 100 mm Hg) for at least 10 minutes. Fill the flask to the 100 mL mark. Weigh and record as item (**E**) below. Record the temperature of the water as item (**E**) below.

2.) Pour the water and soils from the flask into a pan to be oven dried. Be careful not to lose any of the sample. Rinse the contents of the flask into the pan.

3.) Fill the flask with water at the same temperature as in item (**1**) above. Weight the 100 mL volumetric flask flask filled with water and record as item (**D**) below.

4.) When the sample is oven dry weigh and record items (**A, B, & C**) below.

Record the following weights to the nearest 0.01 grams.

A	Weight of Pan	415.52
B	Oven Dry Weight of Soils & Pan	466.01
C	Oven Dry Weight of Soils **(B-A)**	50.49
D	Weight of Pycnometer filled with water	340.91
E	Weight of Pycnometer filled with water & soils	372.86
F	Temperature of water in Item "E"	74.4*F

Technicians Record values to 3 decimal places & Clerical Report values to 2 decimal places

G	Specific Gravity **C/(C+D-E)**	2.723
H	Temperature Correction Factor	0.9974332
I	Corrected Specific Gravity **(H*G)**	2.72

Reviewed by: Meghan Blodgett-Carrillo

Meghan Blodgett-Carrillo

All results apply only to actual locations and materials tested. As a mutual protection to clients, the public and ourselves, all reports are submitted as the confidential property of clients, and authorization for publication of statements, conclusions or extracts from or regarding our reports is reserved pending our written approval. © 2008-2009 Materials Testing & Consulting, Inc. All rights reserved.

Corporate Office ~ 777 Chrysler Drive • Burlington, WA 98233 • Phone (360) 755-1990 • Fax (360) 755-1980
2118 Black Lake Blvd, S.W. • Olympia, WA 98512 • Phone (360) 534-9777 • Fax (360) 534-9779
2126 East Bakerview Road, Suite #101 • Bellingham, WA 98226 • Phone (360) 647-6061 • Fax (360) 647-8111
Website Address: www.mtc-inc.net

Materials Testing & Consulting, Inc.

Geotechnical Engineering • Special Inspections • Materials Testing • Environmental Consulting

ASTM D4318 - Liquid Limit, Plastic Limit and Plasticity Index of Soils

Project:	Q.C. - David Brink Park Shorelin	**Date Received:**	31-Mar-20	**Visual Identification**	
Project #:	20S051-01	**Sampled By:**	Client	Clayey Silt	
Client:	Anchor QEA	**Date Tested:**	2-Apr-20	**Sample Color**	
Source:	DB-B-01-30.3-76.5	**Tested By:**	A. Eifrig	Gray	
Sample #:	B20-0337				

Liquid Limit Determination

	#1	#2	#3	#4	#5	#6
Weight of Wet Soils + Pan:	31.96	35.35	35.61			
Weight of Dry Soils + Pan:	28.09	30.59	31.74			
Weight of Pan:	14.94	14.95	19.35			
Weight of Dry Soils:	13.15	15.64	12.39			
Weight of Moisture:	3.87	4.76	3.87			
% Moisture:	29.4 %	30.4 %	31.2 %			
Number of Blows:	25	18	15			

Liquid Limit @ 25 Blows:	29.4 %
Plastic Limit:	21.8 %
Plasticity Index, I_P:	7.6 %

Plastic Limit Determination

	#1	#2	#3	#4	#5	#6
Weight of Wet Soils + Pan:	35.81	35.54				
Weight of Dry Soils + Pan:	34.44	34.30				
Weight of Pan:	28.11	28.63				
Weight of Dry Soils:	6.33	5.67				
Weight of Moisture:	1.37	1.24				
% Moisture:	21.6 %	21.9 %				

ACCREDITED
Certificate #: 1366.01, 1366.02 & 1366.04

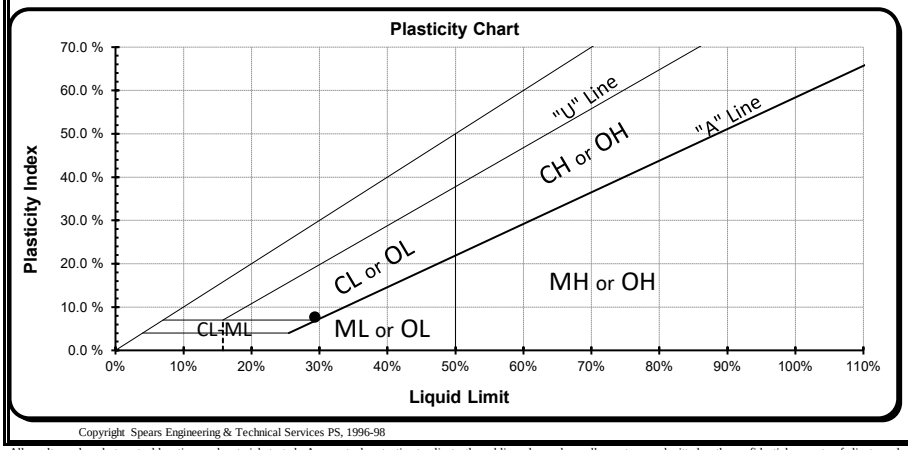

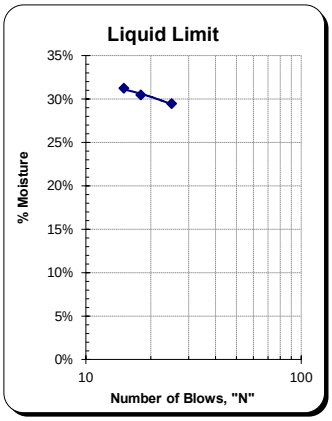

Copyright Spears Engineering & Technical Services PS, 1996-98

All results apply only to actual locations and materials tested. As a mutual protection to clients, the public and ourselves, all reports are submitted as the confidential property of clients, and authorization for publication of statements, conclusions or extracts from or regarding our reports is reserved pending our written approval.

Comments:

Reviewed by:

Meghan Blodgett-Carrillo

Corporate ~ 777 Chrysler Drive • Burlington, WA 98233 • Phone (360) 755-1990 • Fax (360) 755-1980

Regional Offices: Olympia ~ 360.534.9777 Bellingham ~ 360.647.6111 Silverdale ~ 360.698.6787 Tukwila ~ 206.241.1974

Visit our website: www.mtc-inc.net

Materials Testing & Consulting, Inc.

Geotechnical Engineering • Special Inspections • Materials Testing • Environmental Consulting

ASTM D4318 - Liquid Limit, Plastic Limit and Plasticity Index of Soils

Project:	Q.C. - David Brink Park Shorelin	**Date Received:**	31-Mar-20	**Visual Identification**	
Project #:	20S051-01	**Sampled By:**	Client	Silty Clay	
Client:	Anchor QEA	**Date Tested:**	2-Apr-20	**Sample Color**	
Source:	DB-B-02-10-41.5	**Tested By:**	A. Eifrig	Gray	
Sample #:	B20-0339				

Liquid Limit Determination

	#1	#2	#3	#4	#5	#6
Weight of Wet Soils + Pan:	27.73	34.78	32.93			
Weight of Dry Soils + Pan:	24.62	30.92	28.18			
Weight of Pan:	14.70	19.65	14.90			
Weight of Dry Soils:	9.92	11.27	13.28			
Weight of Moisture:	3.11	3.86	4.75			
% Moisture:	31.4 %	34.3 %	35.8 %			
Number of Blows:	25	19	15			

Liquid Limit @ 25 Blows:	31.4 %
Plastic Limit:	22.2 %
Plasticity Index, I_P:	9.2 %

Plastic Limit Determination

	#1	#2	#3	#4	#5	#6
Weight of Wet Soils + Pan:	34.36	35.41				
Weight of Dry Soils + Pan:	33.24	34.08				
Weight of Pan:	28.20	28.09				
Weight of Dry Soils:	5.04	5.99				
Weight of Moisture:	1.12	1.33				
% Moisture:	22.2 %	22.2 %				

ACCREDITED
Certificate #: 1366.01, 1366.02 & 1366.04

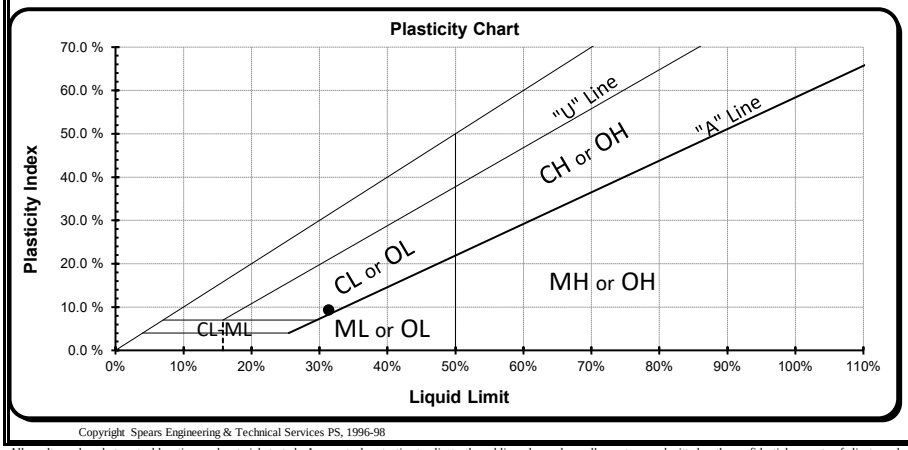

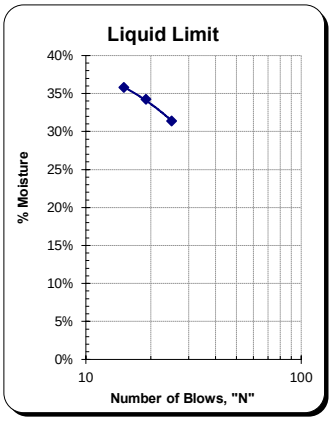

Copyright Spears Engineering & Technical Services PS, 1996-98

All results apply only to actual locations and materials tested. As a mutual protection to clients, the public and ourselves, all reports are submitted as the confidential property of clients, and authorization for publication of statements, conclusions or extracts from or regarding our reports is reserved pending our written approval.

Comments:

Reviewed by:

Meghan Blodgett-Carrillo

Corporate ~ 777 Chrysler Drive • Burlington, WA 98233 • Phone (360) 755-1990 • Fax (360) 755-1980

Regional Offices: Olympia ~ 360.534.9777 Bellingham ~ 360.647.6111 Silverdale ~ 360.698.6787 Tukwila ~ 206.241.1974

Visit our website: www.mtc-inc.net

Materials Testing & Consulting, Inc.

Remember…. One test is worth a thousand expert opinions

Geotechnical Engineering • Special Inspection • Materials Testing

SOILS SPECIFIC GRAVITY ASTM D-854

Project:	Q.C. – David Brink Shoreline 2020	Client:	Anchor QEA
Project #:	20S051-01	Sampled by:	Client
Lab #:	B20-0339	Date Sampled:	3-16-20
Location/Source:	DB-B-02-10-41.5	Tested by:	M. Carrillo
Description:	Silty Clay	Date Tested:	4-3-20
Equipment Used:	CA-017, SA-050, MI-007, SA-028		

Procedures:

1.) Place at least 25 to 50 grams of the wet soils into the 100mL volumetric flask. Fill the flask about 75% full with water. Place the flask with soils and water under a vacuum (maximum 100 mm Hg) for at least 10 minutes. Fill the flask to the 100 mL mark. Weigh and record as item (**E**) below. Record the temperature of the water as item (**E**) below.

2.) Pour the water and soils from the flask into a pan to be oven dried. Be careful not to lose any of the sample. Rinse the contents of the flask into the pan.

3.) Fill the flask with water at the same temperature as in item (**1**) above. Weight the 100 mL volumetric flask flask filled with water and record as item (**D**) below.

4.) When the sample is oven dry weigh and record items (**A, B, & C**) below.

Record the following weights to the nearest 0.01 grams.

A	Weight of Pan	414.33
B	Oven Dry Weight of Soils & Pan	440.01
C	Oven Dry Weight of Soils **(B-A)**	25.68
D	Weight of Pycnometer filled with water	340.87
E	Weight of Pycnometer filled with water & soils	357.19
F	Temperature of water in Item "E"	74.4*F

Technicians Record values to 3 decimal places & Clerical Report values to 2 decimal places

G	Specific Gravity **C/(C+D-E)**	2.744
H	Temperature Correction Factor	0.9974332
I	Corrected Specific Gravity **(H*G)**	2.74

Reviewed by: Meghan Blodgett-Carrillo

Meghan Blodgett-Carrillo

All results apply only to actual locations and materials tested. As a mutual protection to clients, the public and ourselves, all reports are submitted as the confidential property of clients, and authorization for publication of statements, conclusions or extracts from or regarding our reports is reserved pending our written approval. © 2008-2009 Materials Testing & Consulting, Inc. All rights reserved.

Corporate Office ~ 777 Chrysler Drive • Burlington, WA 98233 • Phone (360) 755-1990 • Fax (360) 755-1980
2118 Black Lake Blvd, S.W. • Olympia, WA 98512 • Phone (360) 534-9777 • Fax (360) 534-9779
2126 East Bakerview Road, Suite #101 • Bellingham, WA 98226 • Phone (360) 647-6061 • Fax (360) 647-8111
Website Address: www.mtc-inc.net

Materials Testing & Consulting, Inc.

Geotechnical Engineering • Special Inspection • Materials Testing • Environmental Consulting

Client:	Anchor QEA, LLC	**Date:**	April 16, 2020
Address:	720 Olive Way, Suite 1900	**Project:**	David Brink Shoreline 2020
	Seattle, WA 98101	**Project #:**	20S051-01
Attn:	Casey Janisch	**Sample #:**	S20-0222

As requested MTC, Inc. has performed the following test(s) on the sample referenced above. The testing was performed in accordance with current applicable AASHTO or ASTM standards as indicated below. The results obtained in our laboratory were as follows below or on the attached pages:

	Test(s) Performed:	Test Results		Test(s) Performed:	Test Results
	Sieve Analysis			Sulfate Soundness	
	Proctor			Bulk Density & Voids	
	Sand Equivalent			WSDOT Degradation	
	Fracture Count			CEC	
	Moisture Content			Organic Content	
	Specific Gravity, Coarse		X	Unconfined Compressive Streng	See Attached
	Specific Gravity, Fine				
	Hydrometer Analysis				
	Atterberg Limits				
	Asphalt Extraction/Gradation				
	Rice Density				

If you have any questions concerning the test results, the procedures used, or if we can be of any further assistance please call on us at the number below.

Respectfully Submitted,

Beth Goble
Senior Laboratory Technician

Materials Testing & Consulting, Inc.

Geotechnical Engineering • Special Inspection • Materials Testing • Environmental Consulting

Unconfined Compressive Strength

Project: David Brink Shoreline 2020
Project #: 20S051-01
Client: Anchor QEA, LLC
Source: DB-B-02-20-22.5
Sample #: S20-0222

Date Received: 31-Mar-20
Sampled By: Others
Date Tested: 6-Apr-20
Tested By: B. Goble

ASTM D-2166

Strength/Strain Plot

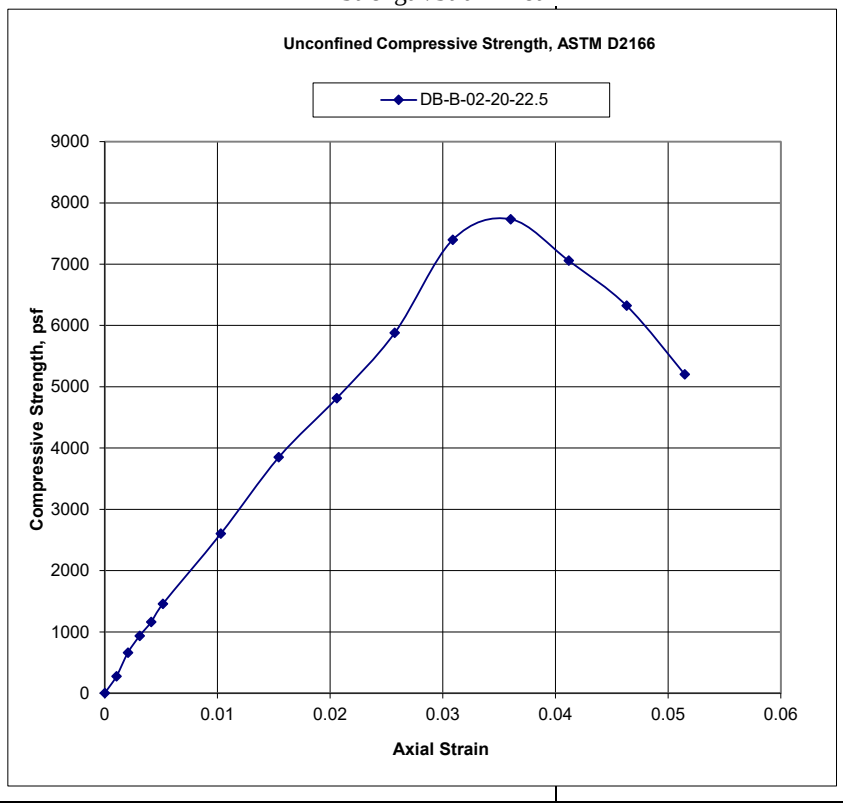

Wet Density, pcf	Moisture Content, %	Dry Density, pcf	Average Height, in.	Average Diameter, in.	H/D Ratio, %	Rate of Strain, %
122.6	25.1%	98.0	4.86	2.83	1.71	1

All results apply only to actual locations and materials tested. As a mutual protection to clients, the public and ourselves, all reports are submitted as the confidential property of clients, and authorization for publication of statements, conclusions or extracts from or regarding our reports is reserved pending our written approval.

Comments: Due to the fragile nature of the sample, this sample did not meet the required 2:1 height to diameter ratio.

Reviewed by: Elizabeth Goble

Corporate ~ 777 Chrysler Drive • Burlington, WA 98233 • Phone (360) 755-1990 • Fax (360) 755-1980
NW Region ~ 805 Dupont Street, Suite 5 • Bellingham, WA 98225 • Phone (360) 647-6061 • Fax (360) 647-8111
SW Region ~ 2118 Black Lake Blvd. SW • Olympia, WA 98512 • Phone (360) 534-9777 • Fax (360) 534-9779
Kitsap Region ~ 5451 NW Newberry Hill Road, Suite 101 • Silverdale, WA 98383 • Phone (360) 698-6787 • Fax (360) 692-1919
Visit our website: www.mtc-inc.net

Attachment 3
ASCE Design Hazards Report

ASCE 7 Hazards Report

Address:
No Address at This Location

Standard: ASCE/SEI 7-16
Risk Category: I
Soil Class: D - Stiff Soil

Elevation: 16.71 ft (NAVD 88)
Latitude: 47.67
Longitude: -122.207

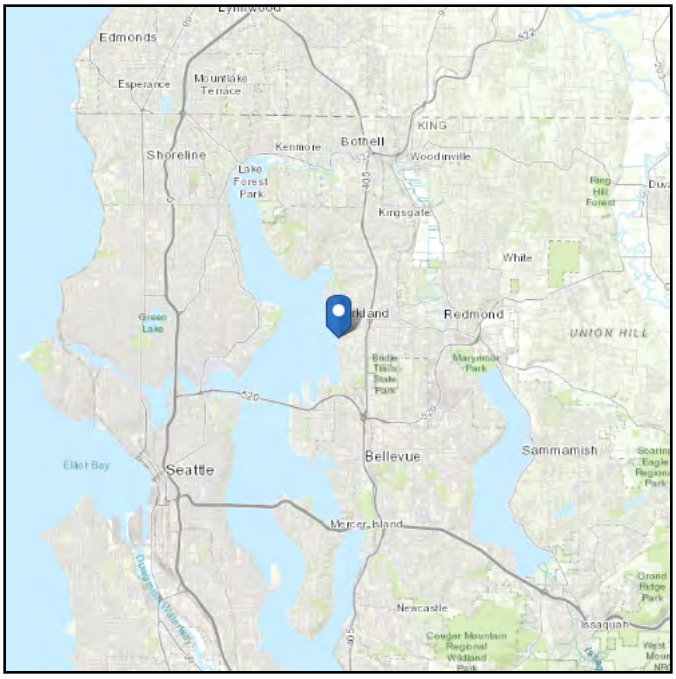

Seismic

Site Soil Class: D - Stiff Soil

Results:

S_S :	1.275	S_{D1} :	N/A
S_1 :	0.444	T_L :	6
F_a :	1	PGA :	0.542
F_v :	N/A	PGA_M :	0.597
S_{MS} :	1.275	F_{PGA} :	1.1
S_{M1} :	N/A	I_e :	1
S_{DS} :	0.85	C_v :	1.355

Ground motion hazard analysis may be required. See ASCE/SEI 7-16 Section 11.4.8.

Data Accessed: Thu May 07 2020

Date Source: USGS Seismic Design Maps

The ASCE 7 Hazard Tool is provided for your convenience, for informational purposes only, and is provided “as is” and without warranties of any kind. The location data included herein has been obtained from information developed, produced, and maintained by third party providers; or has been extrapolated from maps incorporated in the ASCE 7 standard. While ASCE has made every effort to use data obtained from reliable sources or methodologies, ASCE does not make any representations or warranties as to the accuracy, completeness, reliability, currency, or quality of any data provided herein. Any third-party links provided by this Tool should not be construed as an endorsement, affiliation, relationship, or sponsorship of such third-party content by or from ASCE.

ASCE does not intend, nor should anyone interpret, the results provided by this Tool to replace the sound judgment of a competent professional, having knowledge and experience in the appropriate field(s) of practice, nor to substitute for the standard of care required of such professionals in interpreting and applying the contents of this Tool or the ASCE 7 standard.

In using this Tool, you expressly assume all risks associated with your use. Under no circumstances shall ASCE or its officers, directors, employees, members, affiliates, or agents be liable to you or any other person for any direct, indirect, special, incidental, or consequential damages arising from or related to your use of, or reliance on, the Tool or any information obtained therein. To the fullest extent permitted by law, you agree to release and hold harmless ASCE from any and all liability of any nature arising out of or resulting from any use of data provided by the ASCE 7 Hazard Tool.

APPENDIX D:
STORMWATER TIR

City of Kirkland

September 2020
David E. Brink Park Shoreline Renovation

Drainage Technical Information Report

Prepared for City of Kirkland Parks and Community Services Department

September 2020
David E. Brink Park Shoreline Renovation

Drainage Technical Information Report

Prepared for
City of Kirkland
Parks and Community Services Department
505 Market Street, Suite A
Kirkland, Washington 98033

Prepared by
Anchor QEA, LLC
1201 3rd Avenue, Suite 2600
Seattle, Washington 98101

Project Number: 191006-01.02

This Drainage Technical Information Report was prepared under the supervision of the following registered Professional Engineers.

David W. Rice, P.E. (WA License No. 40265)
Anchor QEA, LLC

Joshua T. Sexton, P.E. (WA License No. 57013)
Anchor QEA, LLC

TABLE OF CONTENTS

1 Introduction 1

2 Project Overview 2

2.1 Existing Stormwater Facilities and Drainage 2

2.2 Other On-Site Utilities 3

2.3 Proposed Stormwater Facilities and Drainage 3

2.3.1 Proposed Drainage Area 4

3 Conditions and Core Requirements Summary 5

3.1 Core Requirement No. 1 – Discharge at the Natural Location 5

3.2 Core Requirement No. 2 – Off-Site Analysis 5

3.3 Core Requirement No. 3 – Flow Control 5

3.4 Core Requirement No. 4 – Conveyance System 6

3.5 Core Requirement No. 5 – Erosion and Sediment Control 6

3.6 Core Requirement No. 6 – Maintenance and Operations 6

3.7 Core Requirement No. 7 – Financial Guarantees and Liability 7

3.8 Core Requirement No. 8 – Water Quality 7

3.9 Special Requirements 7

3.9.1 Special Requirement No. 1 – Other Adopted Area-Specific Requirements 7

3.9.2 Special Requirement No. 2 – Flood Hazard Delineation 8

3.9.3 Special Requirement No. 3 – Flood Protection Facilities 8

3.9.4 Special Requirement No. 4 – Source Controls 8

3.9.5 Special Requirement No. 5 – Oil Control 8

4 Drainage Analysis and Design 10

4.1 Hydrologic Analyses 10

4.2 BMP Identification 11

4.2.1 Sheet Flow to Lake Washington 11

5 Operations and Maintenance Manual 12

6 Conclusions and Recommendations 13

7 References 14

TABLES

Table 2-1 Existing Stormwater Drainage Area 3
Table 2-2 Proposed Stormwater Drainage Area 4
Table 4-1 Existing and Proposed Runoff Conditions – Preliminary Flow Rate Estimates 10

FIGURES

Figure 1 Vicinity Map
Figure 2 Existing Drainage Area
Figure 3 Existing Drainage Facilities
Figure 4 Proposed Drainage Improvements

APPENDICES

Appendix A City of Kirkland Drainage Review Flow Chart for Capital Improvements
Appendix B Stormwater Analysis – Existing and Proposed Land Cover and Drainage Areas
Appendix C Hydrologic Model Input and Results
Appendix D Construction SWPPP
Appendix E TIR Worksheet

ABBREVIATIONS

ADA	Americans with Disabilities Act
ADT	average daily traffic
BMP	best management practice
City	City of Kirkland
cf	cubic foot
cfs	cubic foot per second
CMP	corrugated metal pipe
Kirkland Addendum	*City of Kirkland Addendum to the 2016 King County Surface Water Design Manual*
Park	David E. Brink Park
PGIS	pollution-generating impervious surface
PGPS	pollution-generating pervious surface
Project	David E. Brink Park Shoreline Renovation Project
sf	square foot
SWPPP	Stormwater Pollution Prevention Plan
TESC	Temporary Erosion and Sediment Control

1 Introduction

This report was prepared by Anchor QEA for the City of Kirkland (City) Parks and Community Services Department to identify minimum drainage design requirements and present proposed drainage improvements for the David E. Brink Park (Park) Shoreline Renovation Project (Project). Anchor QEA is developing detailed design drawings for the Park improvements.

Improvements will be designed to meet the requirements of the *King County Surface Water Design Manual* (King County 2016) and the *City of Kirkland Addendum to the 2016 King County Surface Water Design Manual* (Kirkland Addendum; City of Kirkland 2017). Improvements will also be designed to satisfy the *2020 Pre-approved Plans* (City of Kirkland 2020) and applicable utility management policies.

2 Project Overview

The City is proposing to repair aging shoreline infrastructure and provide habitat enhancements at David E. Brink Park on Lake Washington at 555 Lake Street South in Kirkland, Washington (Figure 1). The Project will address safety issues along the shoreline through a combination of repair, replacement, and removal of existing shoreline protection features as recommended in the *David E. Brink Park Shoreline Renovation Existing Information Summary Report* (Anchor QEA 2019). The Project will also enhance user experience by providing new access pathways that meet Americans with Disabilities Act (ADA) requirements. Proposed activities include the following:

- Removing and replacing a portion of the concrete bulkhead with a vinyl sheetpile wall with concrete cap at the north end and basalt rockery at the south end of the Park
- Removing and replacing the shoreline water access stairs south of the existing pier with a shorter stair feature
- Replacing the existing pier timber decking with a new grated decking
- Installing terraced rock walls and vegetated areas behind the south end rockery with native low shoreline plantings
- Removing existing derelict piling near the shoreline
- Creating two new pocket beaches with native shoreline plantings
- Placing habitat gravel waterward of the shoreline protection features and pocket beaches
- Constructing ADA-compliant public access pathways

The approximately 1-acre Park is located south of downtown Kirkland in Kirkland's Moss Bay neighborhood. The Park is along a popular pedestrian and bike corridor that runs along Lake Street and Lake Washington Boulevard Northeast and links multiple City shoreline parks. The Park is a popular waterfront destination for visitors seeking to experience the expansive views of Lake Washington and Seattle. In 2014, the City conducted a shoreline structure assessment of the Kirkland shoreline parks. The study found portions of the Park's shoreline to be in "poor" to "very poor" condition (AESI 2014). Maintaining and improving the shoreline infrastructure to address safety and environmental concerns was identified as a high priority by the City.

2.1 Existing Stormwater Facilities and Drainage

The drainage area associated with the Park, shown in Figure 2, is approximately 0.92 acre and drains directly to Lake Washington. Existing stormwater facilities at or near the site are shown in Figure 3. Existing stormwater facilities adjacent to the site include storm drains and catch basins in Lake Street and adjacent properties. Two outfalls discharge stormwater from the adjacent storm drain systems to Lake Washington within the Project site. The locations of outfalls and infrastructure within the Project site are based on a topographic survey completed as part of the design. The locations of off-site

storm drains and facilities are based on the City's GIS database of stormwater facilities, accessed February 19, 2020.

No drainage from the Park is collected or conveyed through the outfalls that convey runoff under the park from off-site areas. There are no storm drains or catch basins that collect and convey runoff within the Park. Stormwater runoff from the Park drains directly to Lake Washington via sheet flow or through shallow groundwater interflow. These areas include sidewalks, lawn areas, and beach areas along the Lake Washington shoreline. Table 2-1 summarizes the existing drainage area within the Park, characterized by pervious and impervious land cover based on topographic survey.

Table 2-1
Existing Stormwater Drainage Area

Location	Surface Type	Project Area Draining Directly to Lake	
		square feet	acres
On-site	PGIS	0	0
On-site	Non PGIS	7,849	0.18
On-site	PGPS	0	0
On-site	Non PGPS	32,018	0.74
Subtotal	**Impervious**	**7,849**	**0.18**
Subtotal	**Pervious**	**32,018**	**0.74**
Total On-site	**All Surfaces**	**39,867**	**0.92**

2.2 Other On-Site Utilities

Other utilities at or near the Park include potable water, sanitary sewer, power, natural gas, and communications. Sanitary sewer, water, and natural gas lines are located in Lake Street. Communication lines run along the sidewalk adjoining the Park and extend into the Park, running adjacent to the sidewalk near the pier. Potable water supplies a drinking fountain and water feature near the sidewalk. A water meter located adjacent to the sidewalk south of the water feature is connected to a water main that runs along Lake Street, adjacent to the Project site. Power is supplied to lighting within the Park and on the pier. The design of Park improvements will avoid or minimize impacts on existing utilities.

2.3 Proposed Stormwater Facilities and Drainage

Stormwater runoff from the Project site will continue to drain to Lake Washington via sheet flow. Drainage improvements are limited to grading new and replaced impervious surfaces to allow sheet flow to adjacent vegetation and lawn areas, and constructing wall drains behind proposed retaining walls.

2.3.1 Proposed Drainage Area

Improved areas of the Park will continue to drain directly to Lake Washington. The proposed improvements will not affect the drainage area boundary shown in Figure 2. Flows from impervious surfaces, including mostly paved pathways, will sheet flow to adjacent lawn or landscaped areas. Flows that do not fully infiltrate will sheet flow to Lake Washington. The renovated lawn area will be improved by adding topsoil and hydroseeding or planting.

The proposed drainage area within the Park is characterized in Table 2-2 by pervious and impervious land cover. Off-site areas that discharge through outfalls that pass under the Park will not be impacted by the Project. After the Project improvements are complete, the Park will include an estimated 9,072 square feet of impervious surface, which is approximately 1,223 square feet more impervious surface than the existing condition. Improvements will include installation of approximately 3,109 square feet of new impervious surface and replacement of approximately 3,489 square feet of impervious surface. Approximately 2,475 square feet of existing impervious surface within the Park will remain and will not be impacted by the Project. All new, replaced, and existing impervious surfaces will be non-pollution-generating impervious surface (NPGIS) including the paved pathway, stairs, and retaining walls.

Table 2-2
Proposed Stormwater Drainage Area

Location	Surface Type	Project Area Draining Directly to Lake	
		square feet	acres
On-site	PGIS	0	0
On-site	Non PGIS, Existing (Remain)	2,475	0.06
On-site	Non PGIS, Replaced	3,489	0.08
On-site	Non PGIS, New	3,109	0.07
On-site	PGPS	0	0
On-site	Non PGPS	30,795	0.71
Subtotal	**Impervious**	**9,073**	**0.21**
Subtotal	**Pervious**	**30,795**	**0.71**
Total On-site	**All Surfaces**	**39,868**	**0.92**

3 Conditions and Core Requirements Summary

The site is considered as a single-threshold discharge area for the purpose of determining minimum stormwater requirements because the discharges combine in Lake Washington less than 0.25 mile downstream of the Project site. The Project is a redevelopment project and is subject to the core requirements for redevelopment outlined in both the *King County Surface Water Design Manual* and the Kirkland Addendum. Appendix A includes markups of the City's Drainage Review Flow Chart and Figure 1.1.2.1 from the *King County Surface Water Design Manual*. The Project will include more than 2,000 square feet of new or replaced impervious surfaces and disturb more than 7,000 square feet, and it is therefore subject to a full drainage review.

3.1 Core Requirement No. 1 – Discharge at the Natural Location

Core Requirement No. 1 requires that runoff from a project must be discharged from the site at the natural location, to the maximum extent practicable. Runoff from the completed Project will be infiltrated or will drain to Lake Washington via sheet flow. Off-site areas will continue to discharge to Lake Washington via two existing concrete outfalls. Proposed drainage improvements will be designed to preserve the existing outfalls and other sheet flow discharge locations.

3.2 Core Requirement No. 2 – Off-Site Analysis

Core Requirement No. 2 requires completion of an off-site analysis for proposed projects, to assess potential off-site drainage and water quality impacts. The Project is located adjacent to Lake Washington and will discharge runoff directly to the lake. Project site areas that drain to Lake Washington are characterized in Appendix B. The Project site does not receive run-on from off-site areas. Storm drain systems adjacent to the site discharge runoff via outfalls that run completely under the site and discharge directly to Lake Washington. The off-site drainage areas and the outfalls that convey water to Lake Washington under the Park will not be impacted by the proposed Project.

3.3 Core Requirement No. 3 – Flow Control

Core Requirement No. 3 requires that projects meeting certain thresholds provide flow control to reduce the impacts of stormwater runoff from impervious surfaces and land cover conversions. The Project will result in more than 5,000 square feet of new and replaced impervious surface and is located in a Basic Flow Control Area requiring Level 1 flow control, as defined in the *King County Surface Water Design Manual*. However, Basic Exception No. 1 (outlined in Section 1.2.3 of the *King County Surface Water Design Manual*) waives the requirement for flow control for any threshold discharge area in which the target surfaces generate no more than a 0.15-cubic foot per second (cfs) increase in the 100-year, 24-hour runoff (when modeled using 15-minute time steps) over existing conditions. The hydrologic analysis presented in Section 4 of this report demonstrates that the Project area will generate less than a 0.15-cfs increase in stormwater runoff over existing conditions,

and therefore the Project falls under this exception. Therefore, the direct discharge exemption criteria are met, and no flow-control best management practices (BMPs) are required for the Project.

3.4 Core Requirement No. 4 – Conveyance System

Core Requirement No. 4 requires that all engineered conveyance systems must be "analyzed, designed, and constructed to provide a minimum level of protection against overtopping, flooding, erosion, and structural failure." No new engineered stormwater conveyance systems will be constructed as part of the Project; therefore, no hydraulic analysis is required.

3.5 Core Requirement No. 5 – Erosion and Sediment Control

Core Requirement No. 5 requires that all projects that clear, grade, or otherwise disturb a site "provide erosion and sediment controls to prevent, to the maximum extent practicable, the transport of sediment from the Project site to downstream drainage facilities, water resources, and adjacent properties." A Temporary Erosion and Sediment Control (TESC) Plan has been developed as part of the detailed Project design. A construction Stormwater Pollution Prevention Plan (SWPPP) has also been prepared for the Project, consistent with the elements and BMPs recommended on the TESC drawings, using the Washington Department of Ecology template. The construction SWPPP is incorporated as Appendix D to this report. The TESC design, specifications, and SWPPP outline requirements for BMPs are designed to address the following elements:

- Clearing Limits
- Cover Measures
- Perimeter Protection
- Traffic Area Stabilization
- Sediment Retention
- Surface Water Collection
- Dewatering Control
- Dust Control
- Flow Control

3.6 Core Requirement No. 6 – Maintenance and Operations

Core Requirement No. 6 requires that the project owner or party responsible for operations and maintenance of drainage facilities must have an operations and maintenance manual that describes the operation and maintenance of the BMPs installed. We anticipate that the existing drainage system and proposed improvements will be operated and maintained by the City, in accordance with its established operating procedures and management practices; a project-specific manual will therefore not be prepared for this Project. Any manufacturer-supplied operation and maintenance

information specific to the facilities installed as part of the Project will be submitted to the City for inclusion with its drainage system operations and maintenance documentation.

3.7 Core Requirement No. 7 – Financial Guarantees and Liability

Core Requirement No. 7 requires two types of financial guarantees for projects constructing or modifying drainage facilities. These include a drainage facilities restoration and site-stabilization guarantee and a drainage defect and maintenance guarantee. Because the Project owner (the City) also owns and maintains existing drainage facilities that will be affected by the Project, this requirement is not applicable.

3.8 Core Requirement No. 8 – Water Quality

Core Requirement No. 8 requires that runoff treatment BMPs must be incorporated into the Project to treat runoff from PGIS and pollution-generating pervious surface (PGPS) prior to discharge to Lake Washington or to groundwater. The *King County Surface Water Design Manual* includes a surface-area exemption, which indicates that a proposed project or any threshold discharge area within the site of a project is exempt if it meets all of the following criteria:

- Less than 5,000 square feet of new PGIS that is not fully dispersed will be added, and
- Less than 5,000 square feet of new plus replaced PGIS that is not fully dispersed will be created as part of a redevelopment project, and
- Less than 35,000 square feet of new PGPS that is not fully dispersed will be added.

As noted earlier, the Project will result in approximately 6,320 square feet of new or replaced impervious surface (sidewalk, concrete steps, and walls), but these will be non-PGIS surfaces and so runoff from these surfaces will not require treatment. To the extent possible, runoff from impervious surfaces will be conveyed to adjacent lawn and landscaped areas, where amended soils will provide some treatment for runoff.

3.9 Special Requirements

The *King County Surface Water Design Manual* also lists five special requirements that may apply based on site-specific characteristics, including the following:

3.9.1 Special Requirement No. 1 – Other Adopted Area-Specific Requirements

The Project area is in the City of Kirkland Shoreline Management Area (SMA) designated Urban Conservancy (UC) and therefore has area-specific, drainage-related zoning regulations. The Project will be designed to comply with any specific requirements identified during the permit review process.

3.9.2 Special Requirement No. 2 – Flood Hazard Delineation

The proposed Project and drainage improvements are not within a flood hazard area, so this requirement will not be triggered.

3.9.3 Special Requirement No. 3 – Flood Protection Facilities

The Project will not rely on existing flood protection facilities or construct new flood protection facilities, so this requirement will not be triggered.

3.9.4 Special Requirement No. 4 – Source Controls

Source controls will be implemented to reduce or prevent the risk of pollution entering the storm drain system or the receiving water (Lake Washington). Source controls during construction will be addressed in the construction SWPPP.

Post-construction source control BMPs include operational and structural BMPs. Operational BMPs are practices or procedures that prevent or reduce pollutants from entering stormwater. Structural BMPs are physical or mechanical devices that prevent or reduce pollutants from entering stormwater or that remove pollutants through treatment after entrainment in stormwater. Post-construction BMPs proposed for the Project are described in Section 4.

Because the Project involves the construction of a city park, no industrial activities will be conducted on site. Operational BMPs will consist of those applicable to landscaping and lawn or vegetation management, management of waste during public gatherings, and management of waste from recreational facilities. The City will be responsible for landscape management consistent with established maintenance procedures regarding the use of pesticides, herbicides, and fertilizers adjacent to a freshwater environment. The City will be responsible for management of waste from public gatherings so that waste does not enter the stormwater system or Lake Washington. Finally, the City will be responsible for management of waste from recreational facilities consistent with City maintenance procedures to prevent waste or untreated sewage from entering the stormwater system or Lake Washington. Because this is a jurisdiction-owned public facility, a formal source-control plan is not required.

3.9.5 Special Requirement No. 5 – Oil Control

Facilities that will have high-use site characteristics or will improve an existing high-use site require oil-control facilities. A high-use site is defined as a "commercial or industrial site that (1) has an expected average daily traffic (ADT) count equal to 100 vehicles per 1,000 sf of gross building area; (2) is subject to petroleum storage or transfer in excess of 1,500 gallons per year, not including delivered heating oil; or (3) is subject to use, storage, or maintenance of a fleet of 25 or more diesel vehicles that are over 10 tons net weight," as well as "any intersection with a measured ADT count of

25,000 vehicles or more on the main roadway and 15,000 vehicles or more on any intersecting roadway… .” No parking areas exist on the site and the other criteria do not apply, so no oil-control facilities will be required.

4 Drainage Analysis and Design

4.1 Hydrologic Analyses

MGS Flood (version 4.07) hydrologic modeling software was used to estimate preliminary peak runoff flow rates from the Park drainage area for the design of improvements that will discharge stormwater runoff to Lake Washington through or from the site under developed Project conditions. MGS Flood was developed by MGS Engineering Consultants for the Washington State Department of Transportation to facilitate design of stormwater facilities, primarily storage and treatment, for roadway projects in western Washington. MGS Flood is approved by the Washington Department of Ecology for hydrologic analysis of stormwater improvements. It uses the HSPF algorithm to simulate runoff from long-term precipitation records. The model features extended precipitation and evaporation time-series 120 to 158 years in length. All three runoff components (surface flow, interflow, and recharge to groundwater) are evaluated by the model. Hydrologic analysis results are presented in Appendix C.

As noted in Section 2, stormwater runoff from the site will sheet flow directly to Lake Washington. Table 2-1 includes a summary of existing pervious and impervious surface areas at the site. Table 2-2 includes a summary of proposed pervious and impervious areas at the site. A more detailed breakdown of existing and post-development land cover is included in Appendix B.

The Project area was evaluated to estimate peak recurrence interval runoff rates. Pervious surfaces were modeled using till-grass land cover parameters. Sidewalks, stairs, and other concrete pads were modeled as impervious surface. MGS Flood model results for this analysis, including computed peak discharge rates and runoff volumes for the storm events, are summarized in Table 4-1. As was noted previously in the summary of Core Requirement No. 3 (Flow Control), the exceptions outlined in Section 1.2.3 of the *King County Surface Water Design Manual* for flow control from Basic Flow Control Areas waive the flow control requirement for any threshold discharge area in which the target surfaces generate no more than a 0.15-cfs increase in the 100-year, 24-hour runoff (when modeled using 15-minute time steps) over existing conditions. The results summarized in Table 4-1 demonstrate that the Project area will generate less than a 0.15-cfs increase in runoff.

Table 4-1
Existing and Proposed Runoff Conditions – Preliminary Flow Rate Estimates

Area	Drainage Area Description	$Q_{2\text{-year}}$ (cfs)	$Q_{25\text{-year}}$ (cfs)	$Q_{100\text{-year}}$ (cfs)
1	Existing On-site Area Sheet Flow to Lake Washington	0.12	0.30	0.38
1	Proposed On-site Area Sheet Flow to Lake Washington	0.13	0.32	0.40

4.2 BMP Identification

4.2.1 Sheet Flow to Lake Washington

All proposed improvements will be completed in areas of the site that are not tributary to the existing outfalls. These areas have been designed to sheet flow surface runoff to landscaping or grass areas, or directly to Lake Washington. Any excess runoff not infiltrated will sheet flow to the shoreline. These areas do not include PGIS and will not require installation of water quality treatment BMPs. The lawn area will also be graded to promote effective sheet flow drainage and will be amended with topsoil, where disturbed, to meet soil depth and quality requirements.

5 Operations and Maintenance Manual

The existing drainage system and proposed improvements will be operated and maintained by the City, in accordance with established operations and maintenance procedures, so a project-specific manual will not be prepared for this Project.

6 Conclusions and Recommendations

The proposed Project will include the following improvements:

- Removing and replacing a portion of the concrete bulkhead with a vinyl sheetpile wall with concrete cap at the north end and basalt rockery at the south end of the Park
- Removing and replacing the shoreline water access stairs south of the existing pier with a shorter stair feature
- Replacing the existing pier timber decking with a new grated decking
- Installing terraced rock walls and vegetated areas behind the south end rockery with native low shoreline plantings
- Removing existing derelict piling near the shoreline
- Creating two new pocket beaches with native shoreline plantings
- Placing habitat gravel waterward of the shoreline protection features and pocket beaches
- Constructing ADA-compliant public access pathways

Because the Project will create more than 2,000 square feet of new impervious surface, a full drainage review is required for the site. This report outlines the core stormwater requirements that apply to the Project. The following drainage improvement concepts are proposed to meet the core requirements:

- Improvements will be designed to sheet flow runoff to adjacent landscaping or grass areas. Excess runoff will sheet flow to the shoreline of Lake Washington. Lawn areas will be graded to promote efficient drainage, and disturbed lawn and landscaped areas will be amended with topsoil to meet soil depth and quality requirements.
- Because the site is within a Basic Flow Control Area and will not result in an increase in the 100-year, 24-hour flow rate of 0.15 cfs or more over existing conditions, Basic Exception No. 1 from Section 1.2.3 of the *King County Surface Water Design Manual* applies and no flow control BMPs are required.
- Since the Park does not have any areas of PGIS that will be added or replaced by the Project, installation of new stormwater treatment facilities is not required.
- No improvements will be made that will impact the drainage patterns or discharge of off-site runoff through two outfalls at the site that drain off-site areas adjacent (east of) the Project site.

7 References

AESI (Associated Earth Sciences, Inc.), 2014. *Kirkland Parks Shoreline Structures Assessment.* Prepared for City of Kirkland Parks and Community Services Department. January 9, 2014.

Anchor QEA, 2019. *David E. Brink Park Shoreline Renovation Existing Information Summary*. Prepared for City of Kirkland Parks and Community Services Department. May 2019.

City of Kirkland, 2017. *City of Kirkland Addendum to the 2016 King County Surface Water Design Manual.* Effective date: January 1, 2017.

City of Kirkland, 2020. *2020 Pre-Approved Plans.* Available from: https://www.kirklandwa.gov/Assets/Public+Works/Public+Works+PDFs/Pre-Approved+Plans/General/Pre-Approved+Plans+(Entire+Doc).pdf

King County, 2016. *King County Surface Water Design Manual.* King County Department of Natural Resources and Parks. April 24, 2016.

Figures

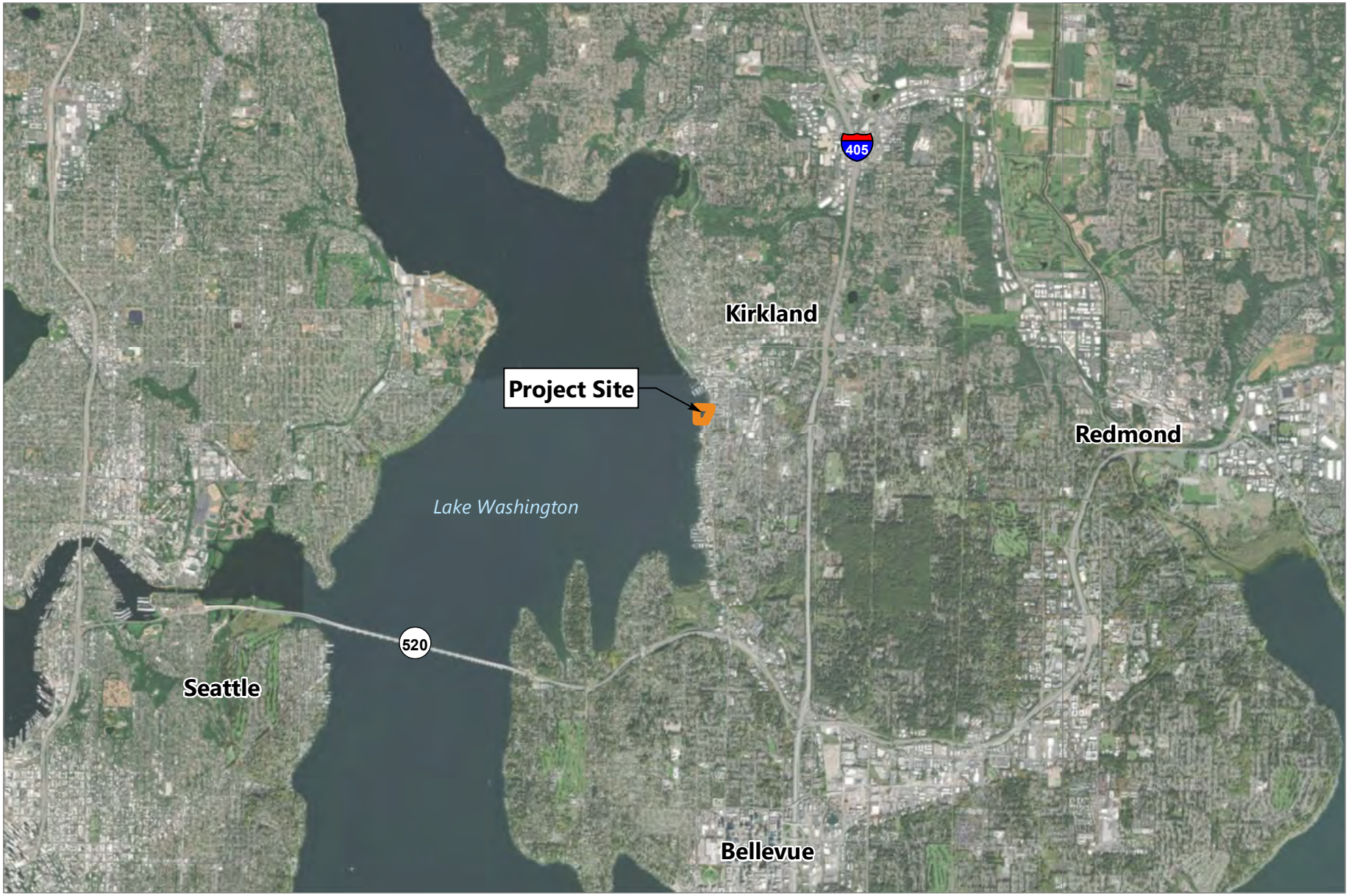

Publish Date: 2020/03/16, 5:09 PM | User: jsexton
Filepath: Q:\Jobs\City_of_Kirkland_1006\Maps\David_Brink_Park_Critical_Areas_Report\AQ_DavidBrink_fig1_Vicinity_Map.mxd

ANCHOR QEA

0 2
Miles

Figure 1
Vicinity Map
Drainage Technical Information Report
David E. Brink Park Shoreline Renovation Project

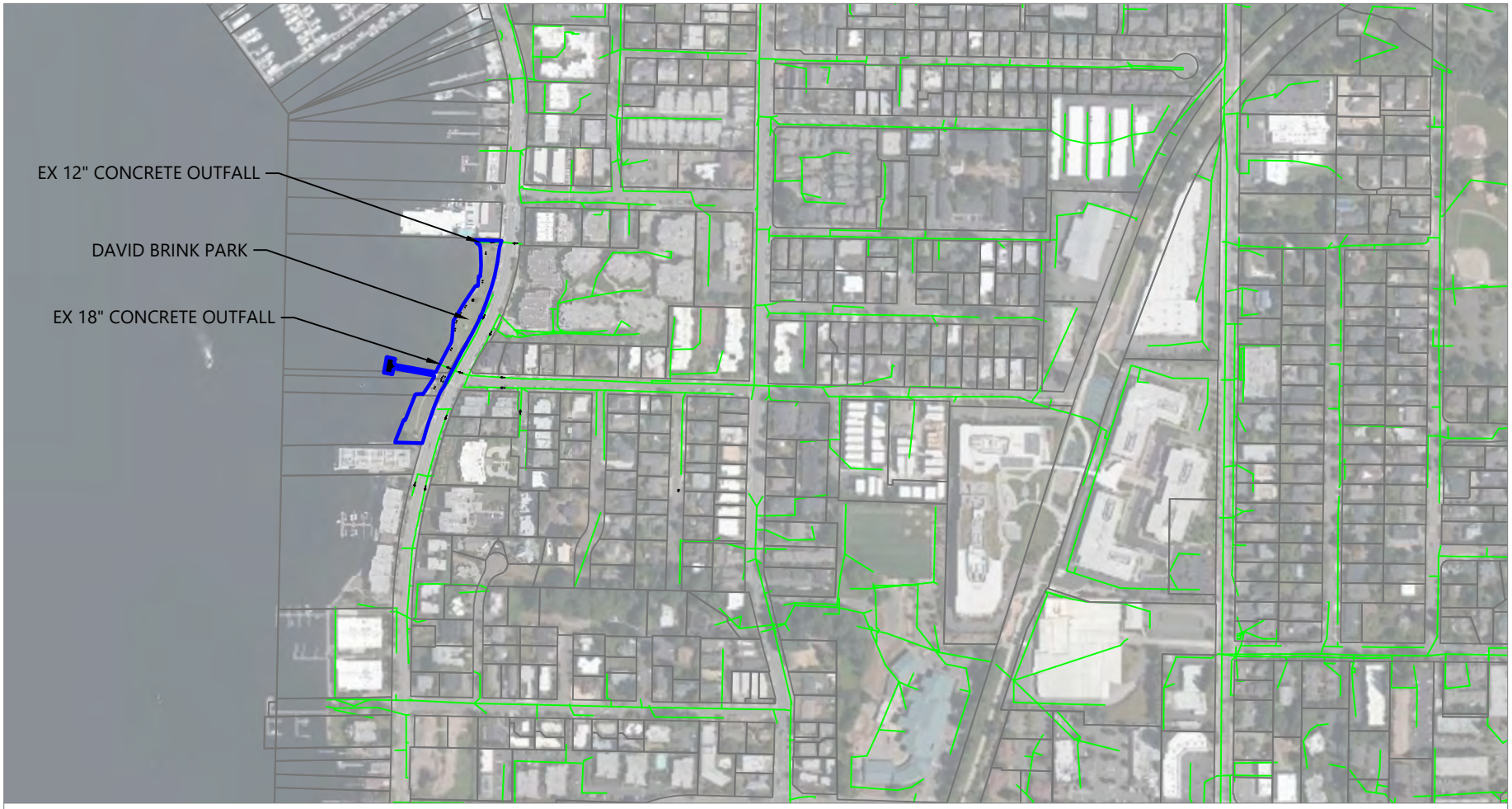

AERIAL SOURCE: Microsoft Corporation
HORIZONTAL DATUM: Washington State Plane North Zone, North American Datum of 1983 (NAD83), U.S. Survey Feet

LEGEND:

- Parcel Boundary
- David E. Brink Park Project Boundary/Drainage Area
- Existing Storm Drain

0 500
Feet

Publish Date: 2020/09/09 3:53 PM | User: jsexton
Filepath: K:\Projects\1006-City of Kirkland\David Brink Park Shoreline Renovation\Working\1006-WK-BrinkPark-DrainageAreasEX.dwg FIGURE 2

ANCHOR QEA

Figure 2
Existing Drainage Area

Drainage Technical Information Report
David E. Brink Park Shoreline Renovation Project

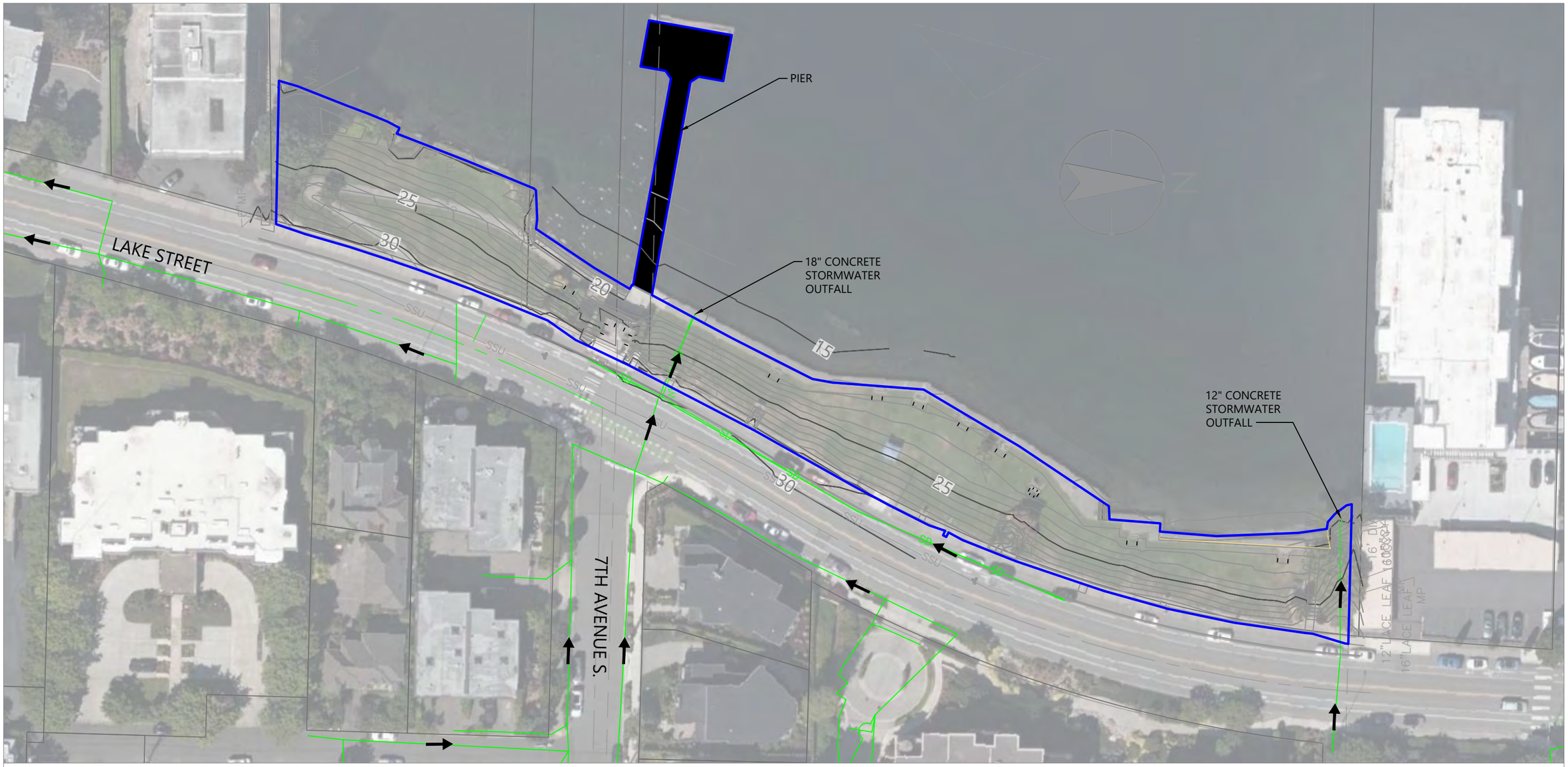

AERIAL SOURCE: Microsoft Corporation
HORIZONTAL DATUM: Washington State Plane North Zone, North American Datum of 1983 (NAD83), U.S. Survey Feet

LEGEND:

- Parcel Boundary
- Project Boundary/Drainage Area
- Flow Direction
- Existing Tree
- Existing Storm Drain
- 20 Existing Major Contour
- Existing Minor Contour
- Existing Gas
- Existing Sanitary Sewer
- Existing Underground Power
- Existing Communications

0 60
Feet

Publish Date: 2020/09/09 4:16 PM | User: jsexton
Filepath: K:\Projects\1006-City of Kirkland\David Brink Park Shoreline Renovation\Working\1006-WK-BrinkPark-DrainageAreasEX.dwg Figure 3

ANCHOR QEA

Figure 3
Existing Drainage Facilities

Drainage Technical Information Report
David E. Brink Park Shoreline Renovation Project

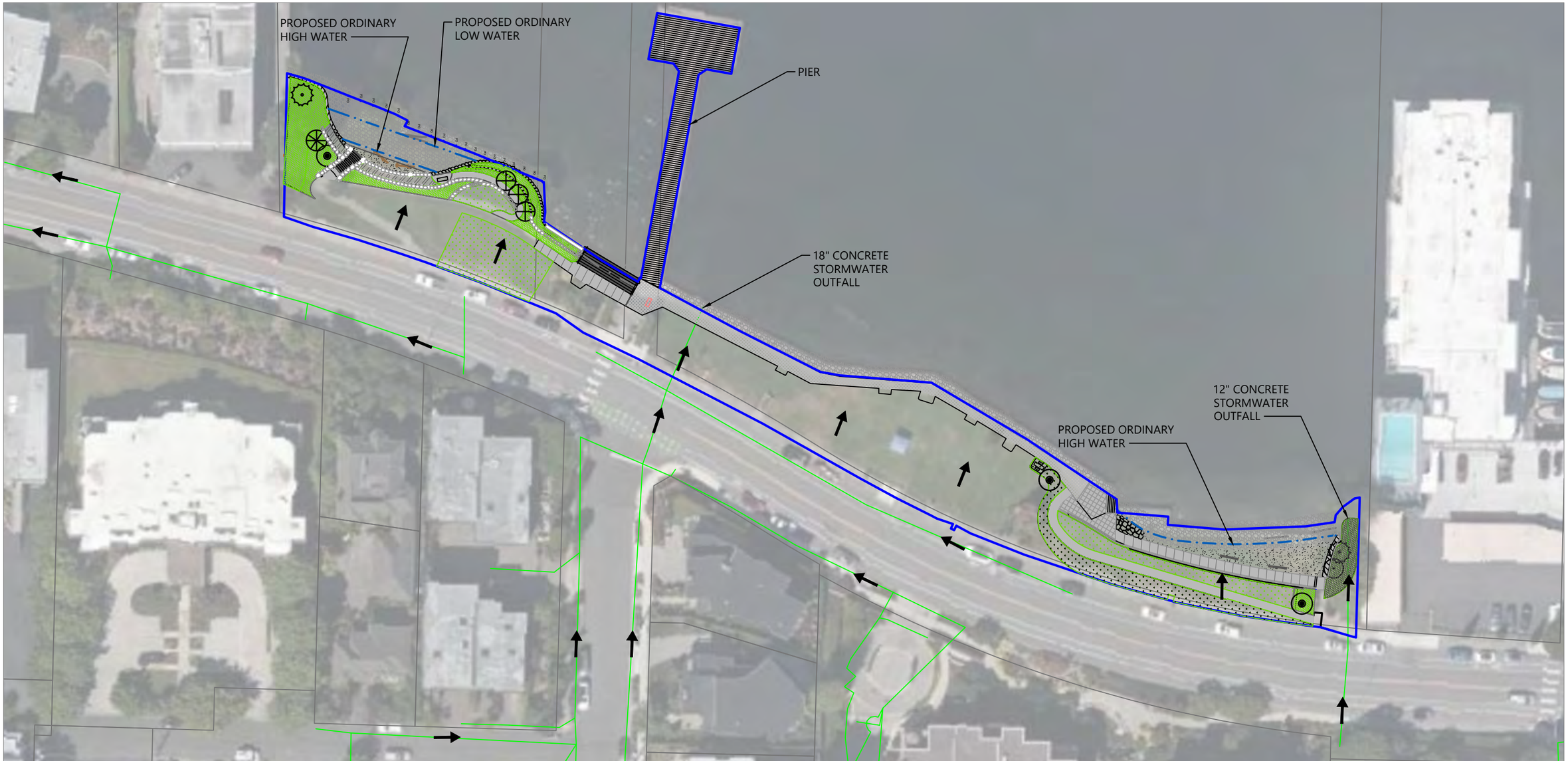

AERIAL SOURCE: Microsoft Corporation
HORIZONTAL DATUM: Washington State Plane North Zone, North American Datum of 1983 (NAD83), U.S. Survey Feet

LEGEND:

- Parcel Boundary
- Project Boundary/Drainage Basin 1
- Flow Direction
- Existing Tree
- Existing Storm Drain
- Existing Major Contour (20)
- Existing Minor Contour
- Existing Gas
- Existing Sanitary Sewer
- Existing Underground Power
- Existing Communications
- Proposed Sidewalk
- Project Boundary/Drainage Basin 1
- Proposed Lawn Area
- Proposed Landscaping
- Proposed Rockery
- Proposed Beach Sand
- Proposed Habitat Gravel
- Proposed Tree

0 60
Feet

Publish Date: 2020/09/09 4:21 PM | User: jsexton
Filepath: K:\Projects\1006-City of Kirkland\David Brink Park Shoreline Renovation\Working\1006-WK-BrinkPark-DrainageAreasPROP.dwg Figure 4

ANCHOR QEA

Figure 4
Proposed Drainage Improvements

Drainage Technical Information Report
David E. Brink Park Shoreline Renovation Project

Appendix A
City of Kirkland Drainage Review Flow Chart for Capital Improvements

City of Kirkland Drainage Review Flow Chart

for **CAPITAL IMPROVEMENT PROJECTS**

Note: If the project site is greater than one acre, a notice of intent form must be submitted and a Construction Stormwater Permit must be obtained from Department of Ecology prior to construction.

Is this a stream restoration project?

- Yes → **Route to Surface Water (SW) Group.**
- No → Does your project add more than 2,000 sq ft of a combination of new impervious area[1] and replaced impervious area[2]?
  - Yes → Does your project add more than 5,000 sq ft of **new** impervious area?
    - Yes → **Route to SW Group.** See Full Drainage Review on back of sheet for the submittal requirements.
    - No → Does your project add more than 10,000 sq ft or more of a combination of new and replaced impervious plus impervious area added since 01/08/01 *(per Endangered Species Act)*?
      - Yes → **Route to SW Group.** See Full Drainage Review on back of sheet for the submittal requirements.
      - No → Does your project add more than 35,000 sq ft of new pervious area[3] *(ex: converting forest area to lawn)*?
        - Yes → **Route to SW Group.** See Full Drainage Review on back of sheet for the submittal requirements.
        - No → Is your project within or adjacent to a:
          - Flood area *(FEMA mapped 100-year floodplain areas)*
          - Erosion area *(soils having severe to very severe erosion hazard per USDA Soil Conservation Service)*
          - Steep slope *(areas on a slope of 40% or more within a vertical elevation change of at least 10 feet)*
          - Landslide hazard area *(geotechnical report may be needed)*
          - Sensitive drainage area *(lakes, streams, wetlands)*
          - Yes → **Route to SW Group** See Targeted Drainage Review on back of sheet for the submittal requirements.
          - No → **No SW Group Drainage Review Necessary** However, if there is an opportunity to install water quality or flow control facilities (even though not required), please contact SW group.
  - No → Does your project propose to construct, modify, or receive stormwater runoff from a drainage pipe or ditch that is 12 inches or more in size or depth?
    - No → **No SW Group Drainage Review Necessary.**
    - Yes → **Route to SW Group** See Targeted Drainage Review on back of sheet for the submittal requirements.

DEFINITIONS:

1. New Impervious Area: the addition of a hard or compacted surface like roofs, pavement, or gravel; or the addition of a more compacted surface like paving over pre-existing dirt or gravel.
2. Replaced Impervious Area: Any existing impervious area on the project site that is proposed to be removed (meaning removal of buildings down to bare soil, or entire layer of concrete pavement) and re-established as impervious surface, excluding impervious removed for sole purpose of installing utilities or performing maintenance.
3. New Pervious Area: The conversion of native vegetated surface or other surface to a non-native pervious surface (i.e. conversion of forest to lawn or bare soil) or any alteration of existing non-pervious surface that significantly increases surface and storm water runoff.

FIGURE 1.1.2.A FLOW CHART FOR DETERMINING TYPE OF DRAINAGE REVIEW REQUIRED

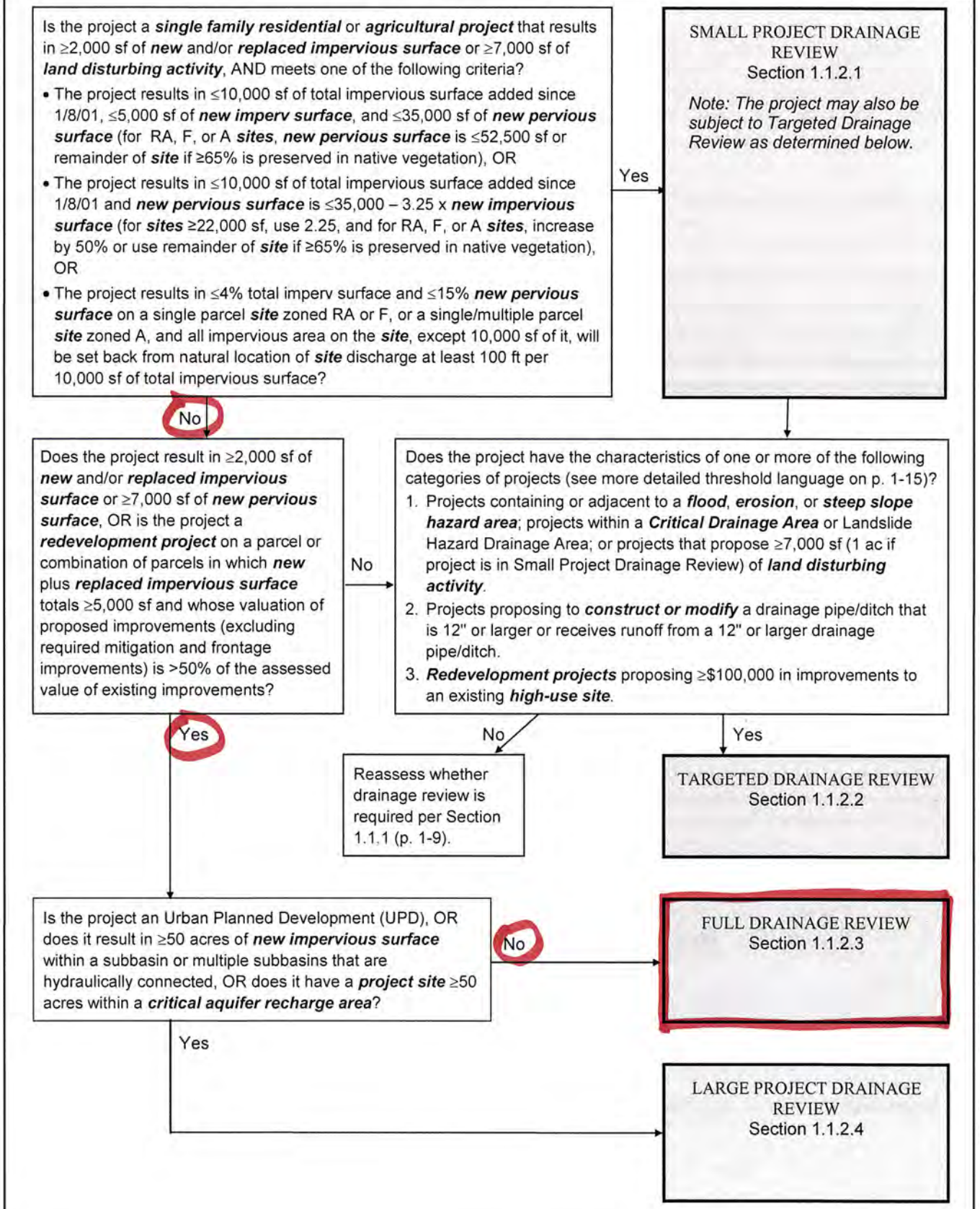

Appendix B
Stormwater Analysis – Existing and Proposed Land Cover and Drainage Areas

David Brink Park
Stormwater Analysis - Existing Land Cover and Drainage Areas

Surface Description	Designation	TDA 1	
		AREA 1	
		Park Interior Area from Face of Curb, Drains to Lake Washington	
		(SF)	(AC)
Sidewalks/Stairs	Non PGIS	7,088	0.16
Concrete Pads/Walls	Non PGIS	761	0.02
SUBTOTAL	**Non PGIS**	**7,849**	**0.18**
Roadways	PGIS	0	0
SUBTOTAL	**PGIS**	**0**	**0**
SUBTOTAL	**Impervious**	**7,849**	**0.18**
Landscaping	Non PGPS	31,405	0.72
Beach	Non PGPS	613	0.01
SUBTOTAL	**Non PGPS**	**32,018**	**0.74**
SUBTOTAL	**Pervious**	**32,018**	**0.74**
TOTAL	**All**	**39,867**	**0.92**

Notes:
PGIS: Pollution Generating Impervious Surface
PGPS: Pollution Generating Pervious Surface

David Brink Park

Stormwater Analysis - Proposed Land Cover and Drainage Areas

Surface Description	Designation	TDA 1 AREA 1 Park Interior Area from Face of Curb, Drains to Puget Sound (SF)	(AC)
Sidewalks/Stairs	***Non PGIS***	***8,270***	***0.19***
Existing (Remain)	Non PGIS	2,046	0.05
Replaced	Non PGIS	3,439	0.08
New	Non PGIS	2,785	0.06
Concrete Pads/Walls	***Non PGIS***	***803***	***0.02***
Existing (Remain)	Non PGIS	428	0.01
Replaced	Non PGIS	51	0.00
New	Non PGIS	324	0.01
SUBTOTAL	**Non PGIS**	**9,072**	**0.21**
Roadways	***PGIS***	***0***	***0***
Existing (Remain)	PGIS	0	0
Replaced	PGIS	0	0
New	PGIS	0	0
SUBTOTAL	**PGIS**	**0**	**0**
SUBTOTAL	**Impervious**	**9,072**	**0.21**
Existing (Remain)	**Non PGIS**	**2,475**	**0.06**
Replaced	**Non PGIS**	**3,489**	**0.08**
New	**Non PGIS**	**3,109**	**0.07**
Landscaping	***Non PGPS***	*29,634*	0.68
Beach	***Non PGPS***	*1,161*	0.03
SUBTOTAL	**Non PGPS**	**30,795**	**0.71**
SUBTOTAL	**Pervious**	**30,795**	**0.71**
TOTAL	**All**	**39,867**	**0.92**

Notes:

PGIS: Pollution Generating Impervious Surface

PGPS: Pollution Generating Pervious Surface

Appendix C
Hydrologic Model Input and Results

MGS FLOOD
PROJECT REPORT

Program Version: MGSFlood 4.46
Program License Number: 200510001
Project Simulation Performed on: 08/25/2020 2:21 PM
Report Generation Date: 08/25/2020 2:24 PM

Input File Name: David Brink Park_90pct.fld
Project Name: David Brink Park
Analysis Title: Drainage Model - 90%
Comments:

PRECIPITATION INPUT

Computational Time Step (Minutes): 15

Extended Precipitation Time Series Selected
Climatic Region Number: 32

Full Period of Record Available used for Routing
Precipitation Station : 99003805 Seattle 38 in_5min 10/01/1939-10/01/2097
Evaporation Station : 991038 Seattle 38 in MAP
Evaporation Scale Factor : 0.750

HSPF Parameter Region Number: 1
HSPF Parameter Region Name : USGS Default

********** Default HSPF Parameters Used (Not Modified by User) **********

********** **WATERSHED DEFINITION** **********

Predevelopment/Post Development Tributary Area Summary

	Predeveloped	Post Developed
Total Subbasin Area (acres)	0.920	0.920
Area of Links that Include Precip/Evap (acres)	0.000	0.000
Total (acres)	0.920	0.920

----------SCENARIO: PREDEVELOPED
Number of Subbasins: 1

---------- Subbasin : Subbasin 1 ----------

	-------Area (Acres) --------
Till Grass	0.740
Impervious	0.180
Subbasin Total	0.920

----------SCENARIO: POSTDEVELOPED
Number of Subbasins: 1

---------- Subbasin : Subbasin 1 ----------

	-------Area (Acres) --------
Till Grass	0.710
Impervious	0.210
Subbasin Total	0.920

********** **LINK DATA** **********

----------SCENARIO: PREDEVELOPED
Number of Links: 1

Link Name: New Copy Lnk1
Link Type: Copy
Downstream Link: None

********** **LINK DATA** **********

----------SCENARIO: POSTDEVELOPED
Number of Links: 1

Link Name: New Copy Lnk1
Link Type: Copy
Downstream Link: None

**********FLOOD FREQUENCY AND DURATION STATISTICS**********

----------SCENARIO: PREDEVELOPED
Number of Subbasins: 1
Number of Links: 1

----------SCENARIO: POSTDEVELOPED
Number of Subbasins: 1
Number of Links: 1

**********Groundwater Recharge Summary **********
Recharge is computed as input to Perlnd Groundwater Plus Infiltration in Structures

Total Predeveloped Recharge During Simulation

Model Element	Recharge Amount (ac-ft)
Subbasin: Subbasin 1	86.200
Link: New Copy Lnk1	Not Applicable
Total:	86.200

Total Post Developed Recharge During Simulation

Model Element	Recharge Amount (ac-ft)
Subbasin: Subbasin 1	82.706
Link: New Copy Lnk1	Not Applicable
Total:	82.706

Total Predevelopment Recharge is Greater than Post Developed
Average Recharge Per Year, (Number of Years= 158)
Predeveloped: 0.546 ac-ft/year, Post Developed: 0.523 ac-ft/year

**********Water Quality Facility Data **********

----------SCENARIO: PREDEVELOPED

Number of Links: 1

----------SCENARIO: POSTDEVELOPED

Number of Links: 1

**********Compliance Point Results **********

Scenario Predeveloped Compliance Subbasin: Subbasin 1

Scenario Postdeveloped Compliance Subbasin: Subbasin 1

***** Point of Compliance Flow Frequency Data *****

Recurrence Interval Computed Using Gringorten Plotting Position

Predevelopment Runoff		Postdevelopment Runoff	
Tr (Years)	Discharge (cfs)	Tr (Years)	Discharge (cfs)
2-Year	0.116	2-Year	0.126
5-Year	0.188	5-Year	0.195
10-Year	0.258	10-Year	0.266
25-Year	0.301	25-Year	0.315
50-Year	0.360	50-Year	0.369
100-Year	0.376	100-Year	0.396
200-Year	0.438	200-Year	0.452

** Record too Short to Compute Peak Discharge for These Recurrence Intervals

****** Flow Duration Performance ******

Excursion at Predeveloped 50%Q2 (Must be Less Than or Equal to 0%):	28.5%	FAIL
Maximum Excursion from 50%Q2 to Q2 (Must be Less Than or Equal to 0%):	30.9%	FAIL
Maximum Excursion from Q2 to Q50 (Must be less than 10%):	99999.0%	FAIL
Percent Excursion from Q2 to Q50 (Must be less than 50%):	90.4%	FAIL

FLOW DURATION DESIGN CRITERIA: FAIL

****** LID Duration Performance ******

Excursion at Predeveloped 8%Q2 (Must be Less Than 0%):	3.9%	FAIL
Maximum Excursion from 8%Q2 to 50%Q2 (Must be Less Than 0%):	31.8%	FAIL

LID DURATION DESIGN CRITERIA: FAIL

Appendix D
Construction SWPPP

July 2020
David E. Brink Park Shoreline Renovation

Stormwater Pollution Prevention Plan

Prepared for City of Kirkland Parks and Community Services Department

July 2020
David E. Brink Park Shoreline Renovation

Stormwater Pollution Prevention Plan

Prepared for
City of Kirkland
Parks and Community Services Department
505 Market Street, Suite A
Kirkland, Washington 98033

Prepared by
Anchor QEA, LLC
1201 3rd Avenue, Suite 2600
Seattle, Washington 98101

Project Number: 191006-01.02

Stormwater Pollution Prevention Plan

For

David E. Brink Park Shoreline Renovation

Prepared For

Department of Ecology – Northwest Regional Office
3190 – 160th Avenue SE
Bellevue, WA 98008-5452
425-649-7000

Owner, Developer, and Operator/Contractor

City of Kirkland: Brian Baker, Public Works
123 5th Avenue
Kirkland, WA 98033

Project Site Location

555 Lake Street South
Kirkland, WA 98033

Certified Erosion and Sediment Control Lead

Adam Carlson, P.E., CESCL

SWPPP Prepared By

Anchor QEA, LLC
1201 3rd Avenue Suite 2600
Seattle, WA 98101
206-287-9130
Joshua Sexton, P.E., Water Resources Engineer
David Rice, P.E., Senior Managing Water Resources Engineer

SWPPP Preparation Date

July 8, 2020

Approximate Project Construction Dates

Summer/Fall 2021
Winter 2022

TABLE OF CONTENTS

1 Introduction 1

2 Site Description 4

2.1 Existing Conditions 4

2.2 Proposed Construction Activities 4

3 Construction Stormwater BMPs 6

3.1 The 13 BMP Elements 6

3.1.1 Element 1 – Preserve Vegetation/Mark Clearing Limits 6

3.1.2 Element 2 – Establish Construction Access 6

3.1.3 Element 3 – Control Flow Rates 7

3.1.4 Element 4 – Install Sediment Controls 7

3.1.5 Element 5 – Stabilize Soils 8

3.1.6 Element 6 – Protect Slopes 9

3.1.7 Element 7 – Protect Drain Inlets 9

3.1.8 Element 8 – Stabilize Channels and Outlets 10

3.1.9 Element 9 – Control Pollutants 11

3.1.10 Element 10 – Control Dewatering 14

3.1.11 Element 11 – Maintain BMPs 15

3.1.12 Element 12 – Manage the Project 15

3.1.13 Element 13 – Protect Low Impact Development 17

3.2 Site-Specific BMPs 17

4 Construction Phasing and BMP Implementation 18

5 Pollution Prevention Team 19

5.1 Roles and Responsibilities 19

5.2 Team Members 19

6 Monitoring and Sampling Requirements 21

6.1 Site Inspection 21

6.1.1 Site Inspection Frequency 21

6.1.2 Site Inspection Documentation 21

6.2 Stormwater Quality Monitoring 22

6.2.1 Turbidity Sampling 22

6.2.2 pH Sampling 23

7 Discharges to 303(d) or Total Maximum Daily Load Waterbodies 24
7.1 303(d) Listed Waterbodies 24
7.2 TMDL Waterbodies 24
8 Recordkeeping and Reporting 25
8.1 Recordkeeping 25
8.1.1 Site Log Book 25
8.1.2 Records Retention 25
8.1.3 Access to Plans and Records 25
8.1.4 Updating the SWPPP 25
8.2 Reporting 26
8.2.1 Discharge Monitoring Reports 26
8.2.2 Notification of Noncompliance 26
9 References 27

TABLES

Table 2-1 Drainage Areas and Stormwater Runoff Flows 5
Table 4-1 BMP Implementation Schedule 18
Table 5-1 Pollution Prevention Team Contact Information 20

ATTACHMENTS

Attachment A Exhibits and TESC Plans
Attachment B Construction BMPs
Attachment C Alternative Construction BMPs
Attachment D Site Inspection Forms and Site Log
Attachment E 303(d) List Waterbodies and TMDL Waterbodies Information

ABBREVIATIONS

ADA	Americans with Disabilities Act
BMP	best management practice
CESCL	Certified Erosion and Sediment Control Lead
cm	Centimeter
CO_2	carbon dioxide
CSWGP	Construction Stormwater General Permit
DMR	Discharge Monitoring Report
Ecology	Washington Department of Ecology
KCSWDM	*King County Surface Water Design Manual*
KMC	City of Kirkland Municipal Code
MSDS	Material Safety Data Sheet
NPDES	National Pollutant Discharge Elimination System
NTU	nephelometric turbidity unit
OWH	ordinary high water
Project	David E. Brink Park Shoreline Renovation Project
SPCC	Spill Prevention, Control, and Countermeasure
SWPPP	Stormwater Pollution Prevention Plan
TESC	temporary erosion and sediment control
TIR	Technical Information Report
TMDL	Total Maximum Daily Load

1 Introduction

This Stormwater Pollution Prevention Plan (SWPPP) has been prepared as part of the National Pollutant Discharge Elimination System (NPDES) stormwater permit requirements for the David E. Brink Park Shoreline Renovation Project (Project) in Kirkland, Washington. The Project is located at 555 Lake Street South in Kirkland, King County, Washington (see Exhibit 1, Attachment A). The Project includes the following:

- Removing and replacing a portion of the concrete bulkhead with a vinyl sheetpile wall with concrete cap at the north end and basalt rockery at the south end of the Park
- Removing and replacing the shoreline water access stairs south of the existing pier with a shorter stair feature
- Replacing the existing pier timber decking with a new grated decking
- Installing terraced rock walls and vegetated areas behind the south end rockery with native low shoreline plantings
- Removing existing derelict piling near the shoreline
- Creating two new pocket beaches with native shoreline plantings
- Placing habitat gravel waterward of the shoreline protection features and pocket beaches
- Constructing Americans with Disabilities Act (ADA)-compliant public access pathways

The purpose of this SWPPP is to describe the proposed construction activities and the temporary and permanent erosion and sediment control measures, pollution prevention measures, inspection/monitoring activities, and recordkeeping that shall be implemented during the proposed construction project.

This SWPPP is intended to be reviewed with construction documentation to support final Project permitting for construction and to provide guidance for selection and implementation of required construction stormwater pollution prevention measures.

A Drainage Technical Information Report (TIR) has been prepared and submitted with this SWPPP for the Project. The TIR is the comprehensive report containing the technical information and analyses to demonstrate compliance with stormwater requirements. The TIR incorporates the SWPPP as Appendix D of the TIR. The TIR supports the stormwater design as shown on the Project construction plans.

The Project construction plans include temporary erosion and sediment control (TESC) drawings. The TESC drawings are included in Attachment A of this document and specifically address work to be undertaken in areas above the ordinary high water (OHW) line. Work to be undertaken below the OHW line shall comply with the Section 404 permit issued by the U.S. Army Corps of Engineers, the Hydraulic Project Approval issued by the Washington Department of Fish and Wildlife, the

Section 401 Certificate issued by the Washington Department of Ecology (Ecology), and other applicable permit requirements.

The following are the objectives of the SWPPP:

1. Implement best management practices (BMPs) to minimize the potential for erosion and sedimentation, and to identify, reduce, eliminate, or control stormwater contamination and water pollution from construction activity.
2. Prevent violations of surface water quality, groundwater quality, or sediment management standards.
3. Prevent adverse water quality impacts during the construction phase, including impacts on beneficial uses of the receiving water, by controlling peak flow rates and volumes of stormwater runoff at the City of Kirkland's outfalls and downstream of the outfalls.

This SWPPP was prepared using the Ecology SWPPP template downloaded from the Ecology website on February 14, 2020. The proposed Project will disturb less than 1 acre, so coverage is not required under the Washington State Construction Stormwater General Permit (CSWGP). However, preparation of a SWPPP consistent with what would be required for CSWGP compliance and implementation of temporary erosion control measures are required by the Kirkland Municipal Code (KMC). This SWPPP was prepared based on the requirements set forth in the CSWGP, which can be found on the Ecology website,[1] the *2016 King County Surface Water Design Manual* (KCSWDM), the KMC, and the *City of Kirkland Addendum to the 2016 King County Surface Water Design Manual*.

The SWPPP will be incorporated as an appendix to the construction specifications for the proposed project, and the Contractor will be required to maintain a copy of the SWPPP on site at all times. The SWPPP will be considered a living document; the Contractor will be required to update the SWPPP to address site conditions and reflect Contractor-proposed modifications to the BMPs proposed herein. The Contractor will be fully responsible for implementing the measures outlined in the SWPPP. Once under contract, the Contractor's Certified Erosion and Sediment Control Lead (CESCL) will replace the temporary CESCL list on the cover of the SWPPP.

The SWPPP is divided into main sections with attachments that include stormwater-related reference materials. The following are the topics presented in each of the main sections:

- Section 1 – Introduction. This section provides a summary description of the Project and the organization of the SWPPP document.

[1] https://ecology.wa.gov/Regulations-Permits/Permits-certifications/Stormwater-general-permits/Construction-stormwater-permit

- Section 2 – Site Description. This section provides a detailed description of the existing site conditions, proposed construction activities, and calculated stormwater flow rates for existing and post–construction conditions.
- Section 3 – Construction Stormwater BMPs. This section provides a detailed description of the BMPs to be implemented based on the 13 required elements of the SWPPP.
- Section 4 – Construction Phasing and BMP Implementation. This section provides a description of the timing of the BMP implementation in relation to the Project schedule.
- Section 5 – Pollution Prevention Team. This section identifies the appropriate contact names (emergency and non-emergency), monitoring personnel, and the on-site TESC inspector.
- Section 6 – Monitoring and Sampling Requirements. This section provides a description of the inspection and monitoring requirements such as the parameters of concern to be monitored, sample locations, sample frequencies, and sampling methods for stormwater discharge locations from the site.
- Section 7 – Discharges to 303(d) or Total Maximum Daily Load Waterbodies. This section provides information on the 303(d) listed impairments and Total Maximum Daily Load requirements.
- Section 8 – Recordkeeping and Reporting. This section describes the requirements for documentation of the BMP implementation, site inspections, monitoring results, reporting, and changes to the implementation of certain BMPs due to site factors experienced during construction.
- Section 9 – References.

Supporting documentation and standard forms are provided in the following attachments:

- Attachment A – Exhibits and TESC Plans
- Attachment B – Construction BMPs
- Attachment C – Alternative Construction BMPs
- Attachment D – Site Inspection Forms and Site Log
- Attachment E – 303(d) List Waterbodies and TMDL Waterbodies Information

2 Site Description

2.1 Existing Conditions

The approximately 1-acre Park is owned and maintained by the City of Kirkland. It is bordered by condominiums to the south and north, Lake Street South to the east, and Lake Washington to the west. The Park includes 660 linear feet of Lake Washington shoreline.

The Park gently slopes immediately landward of the bulkhead along the Lake Washington shoreline. The slope steepens as it approaches Lake Street South. The Park includes a pathway loop that begins in the north with a 5-foot-wide concrete stairway connecting Lake Street to the multiuse concrete path at the shoreline. The stairway does not provide ADA-compliant universal access. The path follows the shoreline adjacent to the existing bulkhead toward the pier. The path continues to the south and up toward an ADA-compliant pathway that switchbacks up the hill to the Lake Street sidewalk.

An existing 15-foot by 20-foot concrete building, approximately 10 feet high, is located upland of the pier with an accessible door at the bottom of the sloped lawn area. The building is not currently used. The building is built into the slope and the rooftop is on grade with the adjacent Lake Street sidewalk. The rooftop is a publicly accessible viewing area with a perimeter guardrail and three benches. North of the rooftop deck along the Lake Street sidewalk, there is another overlook with a public art piece consisting of three cast bronze sculptures and a small water feature with low plantings.

The shoreline consists almost entirely of concrete bulkhead and rockeries. A 2014 shoreline structures assessment found that the shoreline structures at the Park range from “good” to “poor” and “very poor” condition (AESI 2014).

2.2 Proposed Construction Activities

The Project will include the following improvements:

- Removing and replacing a portion of the concrete bulkhead with a vinyl sheetpile wall with concrete cap at the north end and basalt rockery at the south end of the Park
- Removing and replacing the shoreline water access stairs south of the existing pier with a shorter stair feature
- Replacing the existing pier timber decking with a new grated decking
- Installing terraced rock walls and vegetated areas behind the south end rockery with native low shoreline plantings
- Removing existing derelict piling near the shoreline
- Creating two new pocket beaches with native shoreline plantings

- Placing habitat gravel waterward of the shoreline protection features and pocket beaches
- Constructing ADA-compliant public access pathways

Table 2-1 summarizes details regarding Project site drainage areas and computed stormwater runoff flows. Off-site areas and flows are not anticipated to change from existing conditions. All stormwater flow calculations are provided in the TIR for the Project.

Table 2-1
Drainage Areas and Stormwater Runoff Flows

Drainage Area or Stormwater Flow	Quantity
Total site area	0.92 acre (above OHW line)
Percent impervious area before construction	19.7%
Percent impervious area after construction	22.8%
Disturbed area during construction	0.33 acre
Disturbed area that is characterized as impervious (i.e., access roads, staging, parking)	0.11 acre
2-year stormwater runoff peak flow prior to construction (existing, from Project site)	0.12 cfs
10-year stormwater runoff peak flow prior to construction (existing, from Project site)	0.26 cfs
2-year stormwater runoff peak flow prior to construction (existing, off-site areas draining to 12-inch outfall at Project site)	0.13 cfs
10-year stormwater runoff peak flow prior to construction (existing, off-site areas draining to 12-inch outfall at Project site)	0.23 cfs
2-year stormwater runoff peak flow prior to construction (existing, off-site areas draining to 18-inch outfall at Project site)	6.83 cfs
10-year stormwater runoff peak flow prior to construction (existing, off-site areas draining to 18-inch outfall at Project site)	12.22 cfs
2-year stormwater runoff peak flow during and after construction (existing, from Project site)	0.13 cfs
10-year stormwater runoff peak flow during and after construction (existing, from Project site)	0.27 cfs

3 Construction Stormwater BMPs

3.1 The 13 BMP Elements

3.1.1 Element 1 – Preserve Vegetation/Mark Clearing Limits

To protect adjacent properties and to reduce the area of soil exposed to construction, the limits of construction shall be clearly marked before land-disturbing activities begin. Trees that are to be preserved, as well as all sensitive areas and their buffers, shall be clearly delineated, as shown on the design drawings. In general, natural vegetation and native topsoil shall be retained in an undisturbed state to the maximum extent possible. The BMPs relevant to marking the clearing limits that will be applied for this Project include the following:

- High-Visibility Plastic or Metal Fence

High-Visibility Plastic or Metal Fence shall be used to mark clearing limits for the Project and shall be placed prior to construction. Fences shall be maintained throughout the construction period. Natural vegetation shall be preserved for any areas beyond the clearing limits; no disturbance or removal of ground cover beyond the clearing limits shall be permitted. Where a silt fence is placed along the clearing limits, marking using High-Visibility Plastic or Metal Fence is not required. Additional details are provided on the TESC drawings in Attachment A and Attachment B.

Alternate BMPs for marking clearing limits are included in Attachment C as a quick reference tool for the on-site inspector in the event the BMP(s) listed above are deemed ineffective or inappropriate during construction to satisfy the requirements set forth in the CSWGP and the KMC. To avoid potential erosion and sediment control issues that may cause a violation(s) of the NPDES CSWGP, or the KMC, the CESCL shall promptly initiate the implementation of one or more of the alternative BMPs listed in Attachment C if the primary clearing limit BMPs are found to be ineffective.

3.1.2 Element 2 – Establish Construction Access

Construction access or activities occurring on unpaved areas shall be minimized. Where necessary, access points shall be stabilized to minimize the tracking of sediment onto public roads. Wheel washing, street sweeping, and street cleaning shall be employed, as needed, to prevent sediment from entering state waters. All wash wastewater shall be controlled on site. The specific BMPs related to establishing construction access that shall be used on this Project include the following:

- Stabilized Construction Entrance

The Stabilized Construction Entrance shall be implemented at the beginning of the Project and remain throughout the full period of construction. The entrance shall be located north of the planter box that is adjacent to the sidewalk. The entrance shall consist of geotextile beneath 4-inch to 8-inch

quarry spalls a minimum of 12 inches thick. The entrance pad shall be a minimum of 15 feet wide and 100 feet long. Additional details are provided on the TESC drawings in Attachment A and in the BMP description in Attachment B.

Alternate construction access BMPs are included in Attachment C as a quick reference tool for the on-site inspector in the event the BMP(s) listed above are deemed ineffective or inappropriate during construction to satisfy the requirements set forth in the CSWGP and the KMC. To avoid potential erosion and sediment control issues that may cause a violation(s) of the CSWGP and the KMC, the CESCL shall promptly initiate the implementation of one or more of the alternative BMPs listed in Attachment C if existing BMPs are determined to be ineffective.

3.1.3 Element 3 – Control Flow Rates

In order to protect the properties and waterways downstream of the Project site, stormwater discharges from the site shall be controlled. The specific BMPs for flow control that shall be used on this Project include the following:

- No BMPs are required to be implemented.

No properties or waterways downstream of the Project site require flow control protection. Stormwater runoff discharges from the site directly to Lake Washington. Because Lake Washington is listed in the KCSWDM as a major receiving body and meets the criteria for flow control exemption, no permanent flow controls are required.

3.1.4 Element 4 – Install Sediment Controls

All stormwater runoff from disturbed areas shall pass through an appropriate sediment removal BMP before leaving the construction site or prior to being discharged to an infiltration facility. The specific BMP to be used for controlling sediment on this Project is as follows:

- Silt Fence
- In-Water Turbidity Curtain
- Sediment Traps
- Temporary Stormwater Swales

Silt Fences shall be installed downslope of the grading areas. Silt Fences shall be installed after the Stabilized Construction Entrance is installed and prior to initiating other grading work. Silt Fences shall remain during the duration of the Project. Silt Fence shall consist of steel or wood posts no more than 8 feet apart with welded wire backing and filter fabric material (Mirafi 100X or equivalent) no less than 2 feet high. Additional details are provided on the TESC drawings in Attachment A and in the BMP description in Attachment B.

An In-Water Turbidity Curtain shall be installed and maintained in Lake Washington. The In-Water Turbidity Curtain shall consist of a continuous top floating tube and a continuous bottom pocket that can hold ballast weight (provided by a chain or metal bars inside the pocket). The curtain material shall be a permeable, woven geotextile material. The height of the curtain shall be at least 1 foot greater than the total height of the water column during high water stage along its entire length.

Temporary Stormwater Swales and Sediment Traps shall be installed downslope of the grading areas and just upslope from the Silt Fences. Temporary Stormwater Swales and Sediment Traps shall be installed after Silt Fences and prior to initiating other grading work. Additional details are provided on the TESC drawings in Attachment A and in the BMP description in Attachment B.

Alternate sediment control BMPs are included in Attachment C as a quick reference tool for the on-site inspector in the event the BMP(s) listed above are deemed ineffective or inappropriate during construction to satisfy the requirements set forth in the CSWGP and the KMC. To avoid potential erosion and sediment control issues that may cause a violation(s) of the CSWGP or the KMC, the CESCL shall promptly initiate the implementation of one or more of the alternative BMPs listed in Attachment C after the first sign that existing BMPs are ineffective or failing.

In addition, sediment shall be removed from paved areas in and adjacent to construction work areas manually or using mechanical sweepers, as needed, to minimize tracking of sediments on vehicle tires away from the site and to minimize wash off of sediments from adjacent streets in runoff.

3.1.5 Element 5 – Stabilize Soils

Exposed and unworked soils shall be stabilized with the application of effective BMPs to prevent erosion throughout the life of the Project. The specific BMPs for soil stabilization that shall be used on this Project include the following:

- Seeding
- Mulching
- Nets and Blankets
- Plastic Covering

Nets and Blankets or Plastic Covering shall be provided as temporary cover for exposed soils during construction. Additional details are provided on the TESC drawings in Attachment A and in the BMP description in Attachment B.

Alternate soil stabilization BMPs are included in Attachment C as a quick reference tool for the on-site inspector in the event the BMP(s) listed above are deemed ineffective or inappropriate during construction to satisfy the requirements set forth in the CSWGP and the KMC. To avoid potential

erosion and sediment control issues that may cause a violation(s) of the CSWGP or the KMC, the CESCL shall promptly initiate the implementation of one or more of the alternative BMPs listed in Attachment C after the first sign that existing BMPs are ineffective or failing.

The Project site is located west of the Cascade Mountain crest. As such, no soils shall remain exposed and unworked for more than 7 days during the dry season (May 1 to September 30) and 2 days during the wet season (October 1 to April 30). Regardless of the time of year, all soils shall be stabilized at the end of the shift before a holiday or weekend if needed based on weather forecasts.

In general, cut and fill slopes shall be stabilized as soon as possible, and soil stockpiles shall be temporarily covered with plastic sheeting. All stockpiled soils shall be stabilized from erosion, protected with a silt fence or other sediment controls, and where possible, shall be located away from storm drain inlets, waterways, and drainage channels.

3.1.6 Element 6 – Protect Slopes

All cut and fill slopes shall be designed, constructed, and protected in a manner that minimizes erosion. The following specific BMPs shall be used to protect slopes for this Project:

- Seeding
- Mulching
- Nets and Blankets
- Plastic Covering

Nets and Blankets shall be provided as temporary cover for exposed slopes during construction. Additional details are provided on the TESC drawings in Attachment A and in the BMP description in Attachment B.

Alternate slope protection BMPs are included in Attachment C as a quick reference tool for the on-site inspector in the event the BMP(s) listed above are deemed ineffective or inappropriate during construction to satisfy the requirements set forth in the CSWGP and the KMC. To avoid potential erosion and sediment control issues that may cause a violation(s) of the CSWGP or the KMC, the CESCL shall promptly initiate the implementation of one or more of the alternative BMPs listed in Attachment C after the first sign that existing BMPs are ineffective or failing.

3.1.7 Element 7 – Protect Drain Inlets

All existing storm drain inlets, or any new storm drain inlets and culverts made operable during construction, shall be protected to prevent unfiltered or untreated water from entering the drainage conveyance system. However, the first priority is to keep all access roads clean of sediment and prevent sediment-laden water from entering storm drains until treatment can be provided. A Storm

Drain Inlet Protection (catch basin insert) shall be implemented for all drainage inlets and culverts that could potentially be impacted by sediment-laden runoff on and near the Project site. The following drain inlet protection measures shall be applied on this Project:

- Storm Drain Inlet Protection

The Storm Drain Inlet Protection shall consist of catch basin filters located at all catch basin inlets within the Project area and adjacent to the Project site in Lake Street. They shall consist of a geotextile fabric that captures sediment for removal. Each insert shall have a built-in overflow or runoff that will allow water to pass through to the storm drain system during a storm event when the catch basin filter is full or plugged. Additional details are provided on the TESC drawings in Attachment A and in the BMP description in Attachment B.

If the BMP options listed above are deemed ineffective or inappropriate during construction to satisfy the requirements set forth in the CSWGP and the KMC, or if no BMPs are listed above but deemed necessary during construction, the CESCL shall implement one or more of the alternative BMP inlet protection options listed in Attachment C after the first sign that existing BMPs are ineffective or failing.

3.1.8 Element 8 – Stabilize Channels and Outlets

Where site runoff is to be conveyed in channels, or discharged to a stream or other natural drainage point, efforts shall be taken to prevent downstream erosion. The specific BMPs for channel and outlet stabilization that shall be used on this Project include the following:

- No BMPs are required to be implemented.

No channels or natural outlets are part of the existing drainage system at this Project site, and no temporary channels or outlets are anticipated or recommended; therefore, no BMPs from this element shall be implemented.

If channel and outlet stabilization is required, alternate channel and outlet stabilization BMPs are included in Attachment C as a quick reference tool for the on-site inspector in the event the BMP(s) listed above are deemed ineffective or inappropriate during construction to satisfy the requirements set forth in the CSWGP and the KMC. To avoid potential erosion and sediment control issues that may cause a violation(s) of the CSWGP or the KMC, the CESCL shall promptly initiate the implementation of one or more of the alternative BMPs listed in Attachment C after the first sign that existing BMPs are ineffective or failing.

The Project site is located west of the Cascade Mountain crest. As such, all temporary on-site conveyance facilities shall be designed, constructed, and stabilized to minimize erosion from the

expected peak flow from a Type 1A, 10-year, 24-hour recurrence interval storm for the developed condition. Alternatively, the 10-year, 1-hour peak flow rate indicated by an approved continuous runoff simulation model, increased by a factor of 1.6, shall be used. Stabilization, including armoring material, adequate to prevent erosion of outlets, adjacent streambanks, slopes, and downstream reaches shall be provided at the outlets of all conveyance systems.

3.1.9 Element 9 – Control Pollutants

All pollutants, including waste materials and demolition debris, that occur on site shall be handled and disposed of in a manner that does not cause contamination of stormwater. Good housekeeping and preventative measures shall be taken to ensure that the site shall be kept clean, well-organized, and free of debris. If required, BMPs noted below should be implemented to control specific sources of pollutants.

1. As per the federal regulations of the Clean Water Act, the KMC, and according to Final Rule 40 Code of Federal Regulations Part 112, a Spill Prevention, Control, and Countermeasure (SPCC) Plan is required for construction activities. The Contractor shall be responsible for preparing and maintaining an SPCC Plan per the requirements of the Contract Documents. This Plan shall list the City of Kirkland spill response hotline, (425) 587-3900, as the first point of contact and must include the following minimum requirements: All pollutants, including waste materials, demolition debris, and wash water, that occur on site shall be handled and disposed of in a manner that does not cause contamination of stormwater.
2. Cover, containment, and protection from vandalism shall be provided for all chemicals, liquid products, petroleum products, and non-inert wastes present on the site (see Washington Administrative Code Chapter 173-304 for the definition of inert waste). On-site fueling tanks shall include secondary containment.
3. Hazardous chemicals, such as cleaning agents and solvents, shall be stored in an approved chemical storage facility(ies), located in the equipment staging area. When using chemicals, care shall be taken to guard against spillage. In the event of a chemical release, the appropriate authorities shall be contacted, and the spill is to be cleaned up immediately.
4. All equipment shall be inspected regularly to detect any leaks or spills and to identify any necessary maintenance. Maintenance and repair of heavy equipment and vehicles involving oil changes, hydraulic system drain down, solvent and de-greasing cleaning operations, fuel tank drain down and removal, and other activities that may result in discharge or spillage of pollutants to the ground or into stormwater runoff must be conducted in a designated area using spill prevention measures, such as drip pans. Contaminated surfaces shall be cleaned immediately following any discharge or spill incident. Emergency repairs may be performed on site using temporary plastic placed beneath and, if raining, over the vehicle.

5. BMPs shall be used to prevent or treat contamination of stormwater runoff by pH-modifying sources. These sources include, but are not limited to, bulk cement, cement kiln dust, fly ash, new concrete washing and curing waters, waste streams generated from concrete grinding and sawing, exposed aggregate processes, and concrete pumping and mixer washout waters. Stormwater discharges shall not cause or contribute to a violation of the water quality standard for pH in the receiving water.

Concrete Handling

1. Concrete work can generate process water and slurry that contain fine particles and high pH, both of which can violate water quality standards in the receiving water. This BMP is intended to minimize and eliminate concrete process water and slurry from entering waters of the state.
2. Concrete truck chutes, pumps, and internals shall be washed out only into formed areas awaiting installation of concrete or asphalt.
3. Unused concrete remaining in the truck and pump shall be returned to the originating batch plant for recycling.
4. Hand tools including, but not limited to, screeds, shovels, rakes, floats, and trowels, shall be washed off only into formed areas awaiting installation of concrete or asphalt.
5. Equipment that cannot be easily moved, such as concrete pavers, shall only be washed in areas that do not directly drain to natural or constructed stormwater conveyances.
6. Washdown from areas such as concrete aggregate driveways shall not drain directly to natural or constructed stormwater conveyances.
7. When no formed areas are available, wash water and leftover product shall be contained in a lined container. Contained concrete shall be disposed of in a manner that does not violate groundwater or surface water quality standards.
8. Containers shall be checked for holes in the liner daily during concrete pours and repaired the same day.

Sawcutting and Surfacing Pollution Prevention

1. Sawcutting and surfacing operations generate slurry and process water that contains fine particles and high pH (concrete cutting), both of which can violate the water quality standards in the receiving water. This BMP is intended to minimize and eliminate process water and slurry from entering waters of the State.
2. Slurry and cuttings shall be vacuumed during cutting and surfacing operations.
3. Slurry and cuttings shall not remain on permanent concrete or asphalt pavement overnight.
4. Slurry and cuttings shall not drain to any natural or constructed drainage conveyance.

5. Collected slurry and cuttings shall be disposed of in a manner that does not violate groundwater or surface water quality standards.
6. Process water that is generated during hydro-demolition, surface roughening, or similar operations shall not drain to any natural or constructed drainage conveyance and shall be disposed of in a manner that does not violate groundwater or surface water quality standards.
7. Cleaning waste material and demolition debris shall be handled and disposed of in a manner that does not cause contamination of water. If the area is swept with a pick-up sweeper, the material must be hauled out of the area to an appropriate disposal site.
8. Continually monitor operations to determine whether slurry, cuttings, or process water could enter waters of the State. If inspections show that a violation of water quality standards could occur, stop operations and immediately implement preventive measures such as berms, barriers, secondary containment, and vacuum trucks.

Material Delivery, Storage and Containment

1. Prevent, reduce, or eliminate the discharge of pollutants from material delivery and storage to the stormwater system or watercourses by minimizing the storage of hazardous materials on site, storing materials in a designated area, and installing secondary containment.
2. Temporary storage areas should be located away from vehicular traffic, near the construction entrance(s), and away from waterways or storm drains.
3. Material Safety Data Sheets (MSDSs) should be supplied for all materials stored. Chemicals should be kept in their original labeled containers.
4. Hazardous material storage on site should be minimized.
5. Hazardous materials should be handled as infrequently as possible.
6. During the wet weather season (October 1 through April 30), consider storing materials in a covered area.
7. Materials should be stored in secondary containments, such as earthen dike, horse trough, or even a children's wading pool for non-reactive materials such as detergents, oil, grease, and paints. Small amounts of material may be secondarily contained in "bus boy" trays or concrete mixing trays.
8. Do not store chemicals, drums, or bagged materials directly on the ground. Place these items on a pallet and, when possible, in secondary containment.
9. If drums must be kept uncovered, store them at a slight angle to reduce ponding of rainwater on the lids to reduce corrosion. Domed plastic covers are inexpensive and snap to the top of drums, preventing water from collecting.

10. Liquids, petroleum products, and substances listed in 40 Code of Federal Regulations Parts 110, 117, or 302 shall be stored in approved containers and drums and shall not be overfilled. Containers and drums shall be stored in temporary secondary containment facilities.
11. Temporary secondary containment facilities shall provide for a spill containment volume able to contain precipitation from a 25-year, 24-hour storm event, plus 10% of the total enclosed container volume of all containers, or 110% of the capacity of the largest container within its boundary, whichever is greater.
12. Secondary containment facilities shall be impervious to the materials stored therein for a minimum contact time of 72 hours.
13. Secondary containment facilities shall be maintained free of accumulated rainwater and spills. In the event of spills or leaks, accumulated rainwater and spills shall be collected and placed into drums. These liquids shall be handled as hazardous waste unless testing determines them to be non-hazardous.
14. Sufficient separation should be provided between stored containers to allow for spill cleanup and emergency response access.
15. During the wet weather season (October 1 through April 30), each secondary containment facility shall be covered during non-working days, prior to and during rain events.
16. Keep material storage areas clean, organized, and equipped with an ample supply of appropriate spill cleanup material (spill kit). The spill kit should include the following, at a minimum:
    - 1 Water Resistant Nylon Bag
    - 3 Oil Absorbent Socks 3"x 4'
    - 2 Oil Absorbent Socks 3"x 10'
    - 12 Oil Absorbent Pads 17"x19"
    - 1 Pair Splash Resistant Goggles
    - 3 Pairs Nitrile Gloves
    - 10 Disposable Bags with Ties
    - Instructions

3.1.10 Element 10 – Control Dewatering

All dewatering water from open cut excavation, tunneling, foundation work, trench, or underground vaults shall be discharged into a controlled conveyance system prior to discharge to a sediment trap or sediment pond. Clean, non-turbid dewatering water shall not be routed through stormwater sediment ponds, and shall be dispersed or discharged to systems tributary to the receiving waters of the state in a manner that does not cause erosion, flooding, or a violation of state water quality standards in the receiving water. Highly turbid dewatering water from soils known or suspected to be contaminated, or from use of construction equipment, shall require additional monitoring and

treatment as required for the specific pollutants based on the receiving waters into which the discharge is occurring. Such monitoring is the responsibility of the Contractor. Dewatering of soils known to be free of contamination shall trigger BMPs to trap sediment and reduce turbidity.

3.1.11 Element 11 – Maintain BMPs

All temporary and permanent erosion and sediment control BMPs shall be maintained and repaired as needed to ensure continued performance of their intended function. Maintenance and repair shall be conducted in accordance with each particular BMP's specifications. Visual monitoring of the BMPs shall be conducted at least once every calendar week and within 24 hours of any rainfall event that causes a discharge from the site. If the site becomes inactive, and is temporarily stabilized, the inspection frequency shall be reduced to once every month.

All TESC BMPs shall be removed within 30 days after the final site stabilization is achieved or after the temporary BMPs are no longer needed. Trapped sediment shall be removed or stabilized on site. Disturbed soil resulting from removal of BMPs or vegetation shall be permanently stabilized.

3.1.12 Element 12 – Manage the Project

Erosion and sediment control BMPs for this Project have been designed based on the following principles:

- Design the Project to fit the existing topography, soils, and drainage patterns.
- Emphasize erosion control rather than sediment control.
- Minimize the extent and duration of the area exposed.
- Keep runoff velocities low.
- Retain sediment on site.
- Thoroughly monitor the site and maintain all erosion and sediment control measures.
- Schedule major earthwork, when possible, during dry weather.

Because this Project site is located west of the Cascade Mountain crest, the Project shall be managed according to the following key Project components:

Phasing of Construction

- The construction is being phased to the extent practicable in order to prevent soil erosion, and, to the maximum extent possible, the transport of sediment from the site during construction.
- Revegetation of exposed areas and maintenance of that vegetation shall be an integral part of the clearing activities during each phase of construction.

Seasonal Work Limitations

- It is anticipated that construction shall occur during the wet season, from October 1 through April 30. From October 1 through April 30, clearing, grading, and other soil-disturbing activities shall be permitted with the approval of the City of Kirkland. The Contractor shall demonstrate that potential for sediment-laden runoff to leave the site is minimized through a combination of the following:
  - Assess site conditions including existing vegetative coverage, slope, soil type, and proximity to receiving waters
  - Limitations on activities and the extent of disturbed areas
  - Proposed erosion and sediment control measures
- Based on the information provided and/or local weather conditions, the City of Kirkland may expand or restrict the seasonal limitation on site disturbance.
- The following activities are exempt from the seasonal clearing and grading limitations:
  - Routine maintenance and necessary repair of erosion and sediment control BMPs
  - Routine maintenance of public facilities or existing utility structures that does not expose the soil or result in the removal of the vegetative cover to soil
  - Activities where there is 100% infiltration of surface water runoff within the site in approved and installed erosion and sediment control facilities

Coordination with Utilities and Other Jurisdictions

- Care has been taken to coordinate with utilities, other construction projects, and the local jurisdiction in preparing this SWPPP and scheduling the construction work.

Inspection and Monitoring

- All BMPs shall be inspected, maintained, and repaired as needed to ensure continued performance of their intended function. Site inspections shall be conducted by a person who is knowledgeable in the principles and practices of erosion and sediment control. This person has the necessary skills to perform the following:
  - Assess the site conditions and construction activities that could impact the quality of stormwater.
  - Assess the effectiveness of erosion and sediment control measures used to control the quality of stormwater discharges.
  - A CESCL shall be on site or on call at all times when work is occurring at the site.
  - Whenever inspection and/or monitoring reveals that the BMPs identified in this SWPPP are inadequate, due to the actual discharge of or potential to discharge a significant amount of any pollutant, appropriate BMPs or design changes shall be implemented as soon as possible.

Maintaining an Updated Construction SWPPP

- This SWPPP shall be retained on site or within reasonable access to the site.
- The SWPPP shall be modified whenever there is a change in the design, construction, operation, or maintenance at the construction site that has, or could have, a significant effect on the discharge of pollutants to waters of the state.
- The SWPPP shall be modified if, during inspections or investigations conducted by the owner/operator, or the applicable local or state regulatory authority, it is determined that the SWPPP is ineffective in eliminating or significantly minimizing pollutants in stormwater discharges from the site. The SWPPP shall be modified as necessary to include additional or modified BMPs designed to correct problems identified. Revisions to the SWPPP shall be completed within 7 days following the inspection.

3.1.13 Element 13 – Protect Low Impact Development

The Project does not include any Low Impact Development BMPs designed to infiltrate runoff into underlying soils. The Project will include the following permanent stormwater control BMPs:

- All impervious surfaces will sheet flow and be fully dispersed to vegetated areas or will sheet flow directly to Lake Washington.

The sheet flow dispersion areas shall be protected during construction through the use of silt fences and inlet protection. The Contractor shall monitor these areas to ensure that erosion does not occur and to prevent sediment-laden water from discharging across these areas from non-stabilized surfaces. These BMPs shall be constructed later during construction when adjacent surfaces have been stabilized. Following construction of these facilities, runoff from adjacent non-stabilized surfaces shall be controlled so that sediment is not transported to these facilities until adjacent surfaces are fully stabilized.

3.2 Site-Specific BMPs

Site-specific BMPs are shown on the TESC Plan Sheets and Details in Attachment A. These site-specific plan sheets shall be updated as needed.

4 Construction Phasing and BMP Implementation

The BMP implementation schedule shall be driven by the construction schedule. Table 4-1 provides a sequential list of the proposed construction schedule milestones and the corresponding BMP implementation schedule. The list contains key milestones such as when wet season construction BMPS are required.

The BMP implementation schedule in Table 4-1 is keyed to proposed phases of construction, and it reflects differences in BMP installations and inspections that relate to wet season construction. The Project site is located west of the Cascade Mountain crest. As such, the dry season is considered to be from May 1 to September 30 and the wet season is considered to be from October 1 to April 30.

Table 4-1
BMP Implementation Schedule

Schedule Item	Approximate Date
Estimate of construction start date	July 1, 2021
Conduct pre-construction meeting	July 1, 2021
Mobilize equipment on site	July 8, 2021
Mobilize and store all TESC and soil stabilization products	July 8, 2021
Install drainage inlet protection	July 8, 2021
Install stabilized construction entrance	July 8, 2021
Install silt fences and other perimeter controls	July 8, 2021
Install temporary stormwater swales and sediment traps	July 8, 2021
Install in-water turbidity curtain	July 8, 2021
Install other TESC measures	July 8, 2021
Begin maintaining erosion and sediment control measures	July 15, 2021
Begin managing site to minimize soil disturbance	July 15, 2021
Begin clearing and grubbing	July 21, 2021
Begin demolition	July 21, 2021
Begin grading and earthwork	August 16, 2021
Begin implementing soil stabilization (wet season)	October 1, 2021
Stabilize all areas that reach final grade within 7 days	November 1, 2021
Seed or mulch areas to remain unworked more than 30 days	November 15, 2021
Complete permanent seeding, planting, and stabilization	December 15, 2021
Remove TESC BMPs	January 1, 2022

Note:
In-water work window is July 16 through March 15.

5 Pollution Prevention Team

5.1 Roles and Responsibilities

The pollution prevention team consists of personnel responsible for implementation of the SWPPP, including, but not limited to, the following:

- Contractor CESCL: Primary Contractor contact, responsible for site inspections (BMPs, visual monitoring, sampling, etc.); to be called upon in case of failure of any erosion and sediment control measures. The CESCL listed in this SWPPP aided in the development of the SWPPP; however, the Primary Contractor shall be responsible for taking over CESCL duties and shall manage erosion and sediment control during construction. Contractor representatives to be determined at time of award of City contract.
- Project Engineer: For projects with engineered structures only (sediment ponds/traps, sand filters, etc.). Site representative for the owner who is the project's supervising engineer responsible for inspections and issuing instructions and drawings to the Contractor's site supervisor or representative.
- Emergency Ecology Contact: In case of spills to water, contact the Washington Emergency Management Division, National Response Center, and Department of Ecology Northwest Regional Office.
- Emergency Owner Contact: The Emergency Owner Contact for this Project will be the City of Kirkland Spill Hotline.
- Non-Emergency Owner Contact: Individual who is the site owner or representative of the site owner to be contacted in the case of non-emergency situations. The Non-Emergency Owner Contact for this Project will be the Project Engineer.
- Non-Emergency Ecology Contact: Department of Ecology Northwest Regional Office.
- City of Kirkland Monitoring Personnel: City of Kirkland personnel responsible for conducting water quality monitoring.

5.2 Team Members

Names and contact information for those identified as members of the pollution prevention team are provided in Table 5-1.

Table 5-1
Pollution Prevention Team Contact Information

Title	Name(s)	Phone Number
Contractor Superintendent	Placeholder	Placeholder
Contractor CESCL	Placeholder	Placeholder
Contractor Emergency Contact	Placeholder	Placeholder
Contractor Non-Emergency Contact	Placeholder	Placeholder
Contractor Monitoring Personnel	Placeholder	Placeholder
Project Engineer	Brian Baker, Project Engineer	425-587-3827
Spill Hotlines	Washington Emergency Management Division National Response Center	800-258-5990 800-424-8802
Emergency Owner Contact	City of Kirkland Spill Hotline	425-587-3900
Non-Emergency Ecology Contact	Northwest Regional Office	425-649-7000
City of Kirkland Monitoring Personnel	Place Holder	Placeholder

6 Monitoring and Sampling Requirements

Monitoring includes visual inspection, monitoring for water quality parameters of concern, and documentation of the inspection and monitoring findings in a site log book. A site log book shall be maintained for all on-site construction activities and shall include the following:

- A record of the implementation of the SWPPP and other permit requirements
- Site inspections
- Stormwater quality monitoring

For convenience, the inspection form and water quality monitoring forms included in Attachment D of this SWPPP include the required information for the site log book. This SWPPP may function as the site log book if desired, or the forms may be separated and included in a separate site log book. However, if separated, the site log book must be maintained on site or within reasonable access to the site and be made available upon request to Ecology or the local jurisdiction.

6.1 Site Inspection

All BMPs shall be inspected, maintained, and repaired as needed to ensure continued performance of their intended function. The inspector shall be a CESCL. The name and contact information for the CESCL shall be provided, or updated, as needed, in Section 5 of this SWPPP.

Site inspection shall occur in all areas disturbed by construction activities, at all stormwater discharge points, and along the entire perimeter of the in-water turbidity curtain. Stormwater shall be reviewed for the presence of suspended sediment, turbidity, discoloration, and oily sheen. The site inspector shall evaluate and document the effectiveness of the installed BMPs and determine if it is necessary to repair or replace any of the BMPs to improve the quality of stormwater discharges. All maintenance and repairs shall be documented in the site log book or forms provided in this document. All new BMPs or design changes shall be documented in the SWPPP as soon as possible.

6.1.1 Site Inspection Frequency

Site inspections shall be conducted at least once a week and within 24 hours following a significant storm event or any increase in discharge from the site.

6.1.2 Site Inspection Documentation

The site inspector shall record each site inspection using the site log inspection forms provided in Attachment D. The site inspection log forms may be separated from this SWPPP document, but shall be maintained on site or within reasonable access to the site and be made available upon request to Ecology or the local jurisdiction.

6.2 Stormwater Quality Monitoring

The Project has specific water quality requirements because the site discharges to a water body listed as impaired under Section 303(d) of the Clean Water Act. The following text describes the site-specific monitoring for the Project.

6.2.1 Turbidity Sampling

Monitoring requirements for the Project shall include either turbidity or water transparency sampling to monitor site discharges for water quality compliance with the CSWGP and the KMC. Sampling shall be conducted at all discharge points at least once per calendar week and within 24 hours following any discharge from the site.

Turbidity or transparency monitoring shall follow the analytical methodologies described in Section S4 of the CSWGP and as required by other permit approvals. The key benchmark values that require action are 25 nephelometric turbidity units (NTU) for turbidity (equivalent to 32 centimeters [cm] transparency) and 250 NTU for turbidity (equivalent to 6 cm transparency). If the 25 NTU benchmark for turbidity (equivalent to 32 cm transparency) is exceeded, the following steps shall be conducted:

- Ensure all BMPs specified in this SWPPP are installed and functioning as intended.
- Assess whether additional BMPs should be implemented, and document revisions to the SWPPP as necessary.
- Sample discharge location daily until the analysis results are less than 25 NTU (turbidity) or greater than 32 cm (transparency).

If the turbidity is greater than 25 NTU (or transparency is less than 32 cm) but less than 250 NTU (transparency greater than 6 cm) for more than 3 days, additional treatment BMPs shall be implemented within 24 hours of the third consecutive sample that exceeded the benchmark value. Additional treatment BMPs to be considered shall include, but are not limited to, off-site treatment, filtration, and chemical treatment.

If the 250 NTU benchmark for turbidity (or less than 6 cm transparency) is exceeded at any time, the following steps shall be conducted:

1. Notify Ecology by phone within 24 hours of analysis (see Section 5 of this SWPPP for contact information).
2. Continue daily sampling until the turbidity is less than 25 NTU (or transparency is greater than 32 cm).
3. Initiate additional treatment BMPs such as off-site treatment, infiltration, filtration, and chemical treatment within 24 hours of the first 250-NTU exceedance.

4. Implement additional treatment BMPs as soon as possible, but within 7 days of the first 250-NTU exceedance.
5. Describe inspection results and remedial actions taken in the site log book and in monthly discharge monitoring reports as described in Section 8 of this SWPPP.

6.2.2 pH Sampling

Stormwater runoff shall be monitored for pH starting on the first day of any activity that includes more than 40 yards of poured or recycled concrete, or after the application of "engineered soils" such as Portland cement treated base, cement kiln dust, or fly ash. This does not include fertilizers. For concrete work, pH monitoring shall start the first day concrete is poured and continue until 3 weeks after the last pour. For engineered soils, the pH monitoring period begins when engineered soils are first exposed to precipitation and continues until the area is fully stabilized.

Stormwater samples shall be collected daily from all points of discharge from the site and measured for pH using a calibrated pH meter, pH test kit, or wide-range pH indicator paper. If the measured pH is 8.5 or greater, the following steps shall be conducted:

1. Prevent the high pH water from entering storm drains or surface water.
2. Adjust or neutralize the high pH water if necessary, using appropriate technology such as carbon dioxide (CO_2) sparging (liquid or dry ice).
3. Contact Ecology if chemical treatment other than CO_2 sparging is planned.

7 Discharges to 303(d) or Total Maximum Daily Load Waterbodies

7.1 303(d) Listed Waterbodies

Is the receiving water 303(d) (Category 5) listed for turbidity, fine sediment, phosphorus, or pH?

☒ Yes ☐ No

List the impairment(s):

- Lake Washington at Project site is currently listed as Category 5 for bacteria.

If yes, discharges must comply with applicable effluent limitations in S8.C and S8.D of the CSWGP.

303(d) listing information is included in Appendix E.

7.2 TMDL Waterbodies

Waste Load Allocation for CWSGP discharges:

- N/A

Describe the method(s) for TMDL compliance:

- N/A

List and describe BMPs:

- N/A

8 Recordkeeping and Reporting

8.1 Recordkeeping

8.1.1 Site Log Book

A site log book shall be maintained for all on-site construction activities and shall include the following:

- A record of the implementation of the SWPPP and other permit requirements
- Site inspections
- Stormwater quality monitoring

For convenience, the inspection form and water quality monitoring forms included in Attachment D of this SWPPP include the required information for the site log book.

8.1.2 Records Retention

Records of all monitoring information (site log book, inspection reports/checklists, etc.), this SWPPP, and any other documentation of compliance with permit requirements shall be retained during the life of the construction project and for a minimum of 3 years following the termination of permit coverage in accordance with CSWGP condition S5.C and the KMC.

8.1.3 Access to Plans and Records

The SWPPP, Notice of Authorization letter, and site log book shall be retained on site or within reasonable access to the site and shall be made immediately available upon request to Ecology or the local jurisdiction. A copy of this SWPPP shall be provided to Ecology within 14 days of receipt of a written request for the SWPPP from Ecology. Any other information requested by Ecology shall be submitted within a reasonable time. A copy of the SWPPP or access to the SWPPP shall be provided to the public when requested in writing in accordance with the CSWGP.

8.1.4 Updating the SWPPP

In accordance with conditions S3, S4.B, and S9.B.3 of the CSWGP and the KMC, this SWPPP shall be modified if the SWPPP is ineffective in eliminating or significantly minimizing pollutants in stormwater discharges from the site or there has been a change in design, construction, operation, or maintenance at the site that has a significant effect on the discharge, or potential for discharge, of pollutants to waters of the state. The SWPPP shall be modified within 7 days of determination based on inspection(s) that additional or modified BMPs are necessary to correct problems identified, and an updated timeline for BMP implementation shall be prepared.

8.2 Reporting

8.2.1 Discharge Monitoring Reports

Discharge Monitoring Reports (DMRs) shall be submitted to the City Project Engineer monthly. If there was no discharge during a given monitoring period, the Permittee shall submit the form as required, with the words "No discharge" entered in the place of monitoring results. The DMR due date is 15 days following the end of each month.

8.2.2 Notification of Noncompliance

If any actions result in a threat to human health or the environment, the following steps shall be taken:

1. The City Project Engineer shall be immediately notified of the failure to comply.
2. Immediate action shall be taken to control the noncompliance issue and to correct the problem. If applicable, sampling and analysis of any noncompliance shall be repeated immediately and the results submitted to the City Project Engineer within 5 days of becoming aware of the violation.
3. A detailed written report describing the noncompliance shall be submitted to the City Project Engineer within 5 days, unless requested earlier.

9 References

AESI (Associated Earth Sciences, Inc.), 2014. *Kirkland Parks Shoreline Structures Assessment.* Prepared for City of Kirkland Parks and Community Services Department. January 9, 2014.

Attachment A
Exhibits and TESC Plans

K:\Projects\1006-City of Kirkland\David Brink Park Shoreline Renovation\Drainage Report Figures\1006-RP-001-DavidBrinkPark\VicinityMap.dwg F1

Feb 14, 2020 2:35pm jsexton

AERIAL SOURCE: Bing Maps.
HORIZONTAL DATUM: Washington State Plane North, NAD83, U.S. Feet.

0 1500
Scale in Feet

ANCHOR QEA

Exhibit 1
Location Map
David Brink Park Shoreline Renovation Construction SWPPP
City of Kirkland

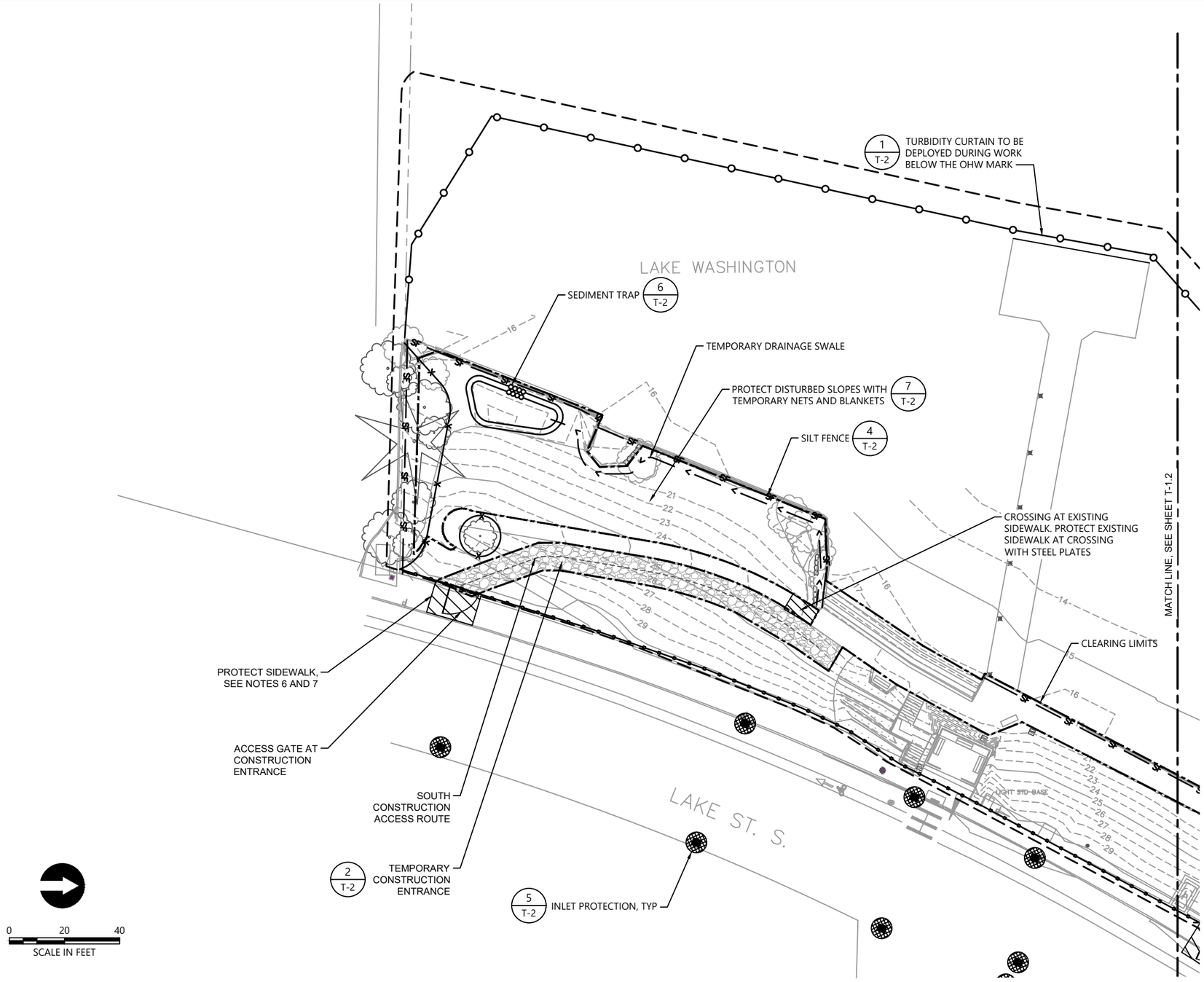

LEGEND:

- PARK BOUNDARY
- PROJECT LIMITS
- EXISTING CONTOUR
- EXISTING ORDINARY HIGH WATER MARK (OHWM)
- EXISTING ORDINARY LOW WATER MARK (OLWM)
- EXISTING ROCK BULKHEAD TO REMAIN
- PROTECT EXISTING TREES TO REMAIN
- TREE PROTECTION FENCING 3 T-2
- ACCESS GATE
- IN-WATER TURBIDITY CURTAIN SEE NOTE 5 1 T-2
- CLEARING, GRADING, AND DISTURBANCE LIMITS
- TEMPORARY CONSTRUCTION ENTRANCE 2 T-2
- SILT FENCE 4 T-2
- INLET PROTECTION 5 T-2
- TEMPORARY CONSTRUCTION FENCING
- TEMPORARY DRAINAGE SWALE
- SEDIMENT TRAP 6 T-2

NOTES:

1. HORIZONTAL DATUM: WASHINGTON STATE PLANE NORTH ZONE, NORTH AMERICAN DATUM OF 1983 (NAD83), U.S. SURVEY FEET
2. VERTICAL DATUM: NAVD 88
3. SURVEY PROVIDED BY STANTEC, INC IN MARCH 2019
4. SEE SHEET T-3 FOR TESC NOTES
5. TURBIDITY CURTAIN ALIGNMENT IS DIAGRAMMATIC. CONTRACTOR TO DEPLOY AND MAINTAIN A TURBIDITY CURTAIN AROUND WORK AREAS TO FULFILL ENVIRONMENTAL PERMIT CONDITIONS
6. THE CONTRACTOR SHALL PROTECT THE EXISTING SIDEWALK AT TEMPORARY CONSTRUCTION ACCESS LOCATIONS AND MAINTAIN SAFE PEDESTRIAN ACCESS ALONG THE SIDEWALK THROUGHOUT THE CONSTRUCTION PERIOD. THE CONTRACTOR SHALL USE STEEL PLATES, TIMBER MATS, OR ANOTHER APPROVED METHOD TO PROTECT THE SIDEWALK FROM DAMAGE AT TEMPORARY CONSTRUCTION ACCESS LOCATIONS.
7. THE CONTRACTOR SHALL BE RESPONSIBLE FOR REPAIR OF ANY DAMAGE TO THE CURB, GUTTER, SIDEWALK, OR THE INFRASTRUCTURE IN THE LAKE STREET RIGHT-OF-WAY CAUSED BY THE WORK.

ONE INCH
AT FULL SIZE, IF NOT ONE INCH SCALE ACCORDINGLY

90% DESIGN SUBMITTAL
NOT FOR CONSTRUCTION

ANCHOR QEA

CITY OF KIRKLAND WASHINGTON

123 Fifth Ave
Kirkland, WA 98033
(425) 587-3300

REVISIONS

REV	DATE	BY	APP'D	DESCRIPTION

DESIGNED BY: J. SEXTON
DRAWN BY: C. WEE/C. HEWETT
CHECKED BY: P. HUMMEL
APPROVED BY: P. HUMMEL
SCALE: AS SHOWN
DATE: JUNE 2020

DAVID E. BRINK PARK SHORELINE RENOVATION

TEMPORARY EROSION AND STORMWATER CONTROL (TESC) PLAN - SOUTH

T-1.1

SHEET # 6 OF 37

K:\Projects\1006-City of Kirkland\David Brink Park Shoreline Renovation\Construction Plans\1006-PL-TESC.dwg T-1.1 TESC PLAN
Jul 08, 2020 3:21pm cwee

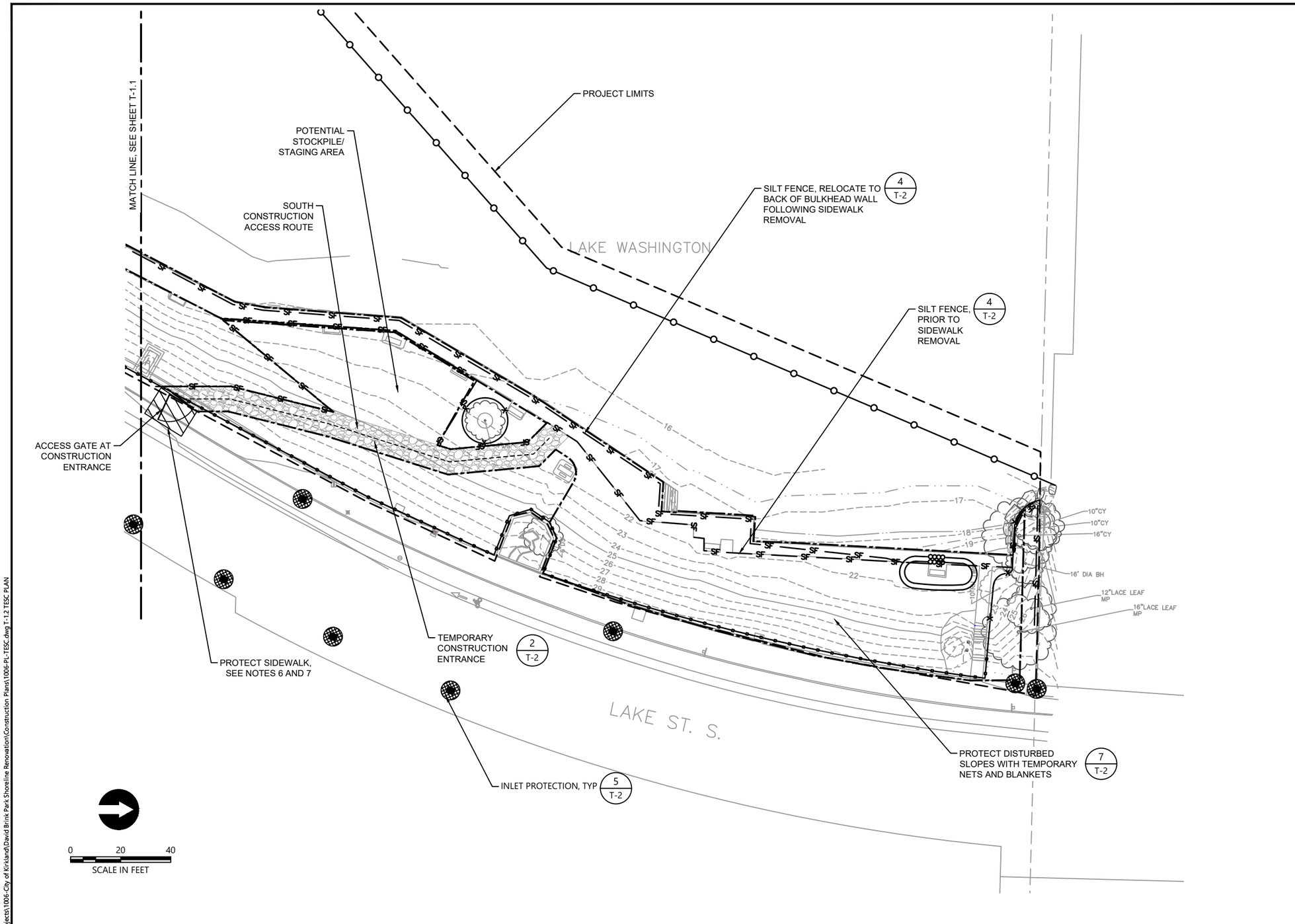

LEGEND:

- PROJECT LIMITS
- PROPERTY BOUNDARY
- CLEARING, GRADING, AND DISTURBANCE LIMITS
- EXISTING OHWM
- EXISTING OLWM
- EXISTING MAJOR CONTOUR
- EXISTING MINOR CONTOUR
- EXISTING TREE
- EXISTING STORM SEWER
- EXISTING ROCK BULKHEAD
- IN-WATER TURBIDITY CURTAIN 1/T-2
- TEMPORARY CONSTRUCTION ENTRANCE 2/T-2
- SILT FENCE 3/T-2
- INLET PROTECTION 4/T-2
- TEMPORARY DRAINAGE SWALE
- SEDIMENT TRAP 6/T-2

NOTES:

1. HORIZONTAL DATUM: WASHINGTON STATE PLANE NORTH ZONE, NORTH AMERICAN DATUM OF 1983 (NAD83), U.S. SURVEY FEET
2. VERTICAL DATUM: NAVD 88
3. SURVEY PROVIDED BY STANTEC, INC IN MARCH 2019
4. SEE SHEET T-3 FOR TESC NOTES
5. TURBIDITY CURTAIN ALIGNMENT IS DIAGRAMMATIC. CONTRACTOR TO DEPLOY AND MAINTAIN A TURBIDITY CURTAIN AROUND WORK AREAS TO FULFILL ENVIRONMENTAL PERMIT CONDITIONS
6. THE CONTRACTOR SHALL PROTECT THE EXISTING SIDEWALK AT TEMPORARY CONSTRUCTION ACCESS LOCATIONS AND MAINTAIN SAFE PEDESTRIAN ACCESS ALONG THE SIDEWALK THROUGHOUT THE CONSTRUCTION PERIOD. THE CONTRACTOR SHALL USE STEEL PLATES, TIMBER MATS, OR ANOTHER APPROVED METHOD TO PROTECT THE SIDEWALK FROM DAMAGE AT TEMPORARY CONSTRUCTION ACCESS LOCATIONS.
7. THE CONTRACTOR SHALL BE RESPONSIBLE FOR REPAIR OF ANY DAMAGE TO THE CURB, GUTTER, SIDEWALK, OR THE INFRASTRUCTURE IN THE LAKE STREET RIGHT-OF-WAY CAUSED BY THE WORK.

ONE INCH
AT FULL SIZE, IF NOT ONE INCH SCALE ACCORDINGLY

90% DESIGN SUBMITTAL
NOT FOR CONSTRUCTION

K:\Projects\1006-City of Kirkland\David Brink Park Shoreline Renovation\Construction Plans\1006-PL-TESC.dwg T-1.2 TESC PLAN
Jul 08, 2020 3:21pm cwee

ANCHOR QEA

CITY OF KIRKLAND WASHINGTON

123 Fifth Ave
Kirkland, WA 98033
(425) 587-3300

REVISIONS

REV	DATE	BY	APP'D	DESCRIPTION

DESIGNED BY: I. LASTNAME
DRAWN BY: C. WEE/C. HEWETT
CHECKED BY: P. HUMMEL
APPROVED BY: P. HUMMEL
SCALE: AS SHOWN
DATE: JUNE 2020

DAVID E. BRINK PARK SHORELINE RENOVATION

TEMPORARY EROSION AND STORMWATER CONTROL (TESC) PLAN - NORTH

T-1.2

SHEET # 7 OF 37

Attachment B
Construction BMPs

Significant sources of upstream surface water that drain onto disturbed areas shall be intercepted and conveyed to a stabilized discharge point downstream of the disturbed areas. Surface water collection measures shall be installed concurrently with or immediately following rough grading and shall be designed, constructed, and stabilized as needed to minimize erosion.

7. **Dewatering Control:** The water resulting from construction site de-watering activities must be treated prior to discharge or disposed of as specified.

8. **Dust Control:** Preventative measures to minimize wind transport of soil shall be implemented when a traffic hazard may be created or when sediment transported by wind is likely to be deposited in water resources.

9. **Flow Control:** Surface water from disturbed areas must be routed through the project's onsite flow control facility or other provisions must be made to prevent increases in the existing site conditions 2-year and 10-year runoff peaks discharging from the project site during construction (flow control BMP areas (existing or proposed) shall not be used for this purpose).

10. **Control Pollutants:** Stormwater pollution prevention (SWPPS) measures are required to prevent, reduce, or eliminate the discharge of pollutants to onsite or adjacent stormwater systems or watercourses from construction-related activities such as materials delivery and storage, onsite equipment fueling and maintenance, demolition of existing buildings and disposition of demolition materials and other waste, and concrete handling, washout and disposal. Section D.2.2 describes BMPs specific to this purpose; additionally, several of the ESC BMPs described herein are applicable.

11. **Protect Existing and Proposed Flow Control BMPs:** Sedimentation and soil compaction reduce the infiltration capacity of native and engineered soils. Protection measures shall be applied/installed and maintained so as to prevent adverse impacts to existing flow control BMPs and areas of proposed flow control BMPs for the project. Adverse impacts can prompt the requirement to restore or replace affected BMPs.

12. **Maintain BMPs:** Protection measures shall be maintained to assure continued performance of their intended function, to prevent adverse impacts to existing flow control BMPs and areas of proposed flow control BMPs, and protect other disturbed areas of the project.

13. **Manage the Project:** Coordination and timing of site development activities relative to ESC concerns, and timely inspection, maintenance and update of protective measures are necessary to effectively manage the project and assure the success of protective ESC and SWPPS design and implementation.

D.2.1.1 CLEARING LIMITS

Prior to any site clearing or grading, those areas that are to remain undisturbed during project construction shall be delineated. At a minimum, clearing limits shall be installed at the edges of all critical area buffers and any other areas required to be left uncleared such as portions of the site subject to clearing limits under KCC 16.82.150, areas around significant trees identified to be retained, flow control BMP areas to be protected, and other areas identified to be left undisturbed to protect sensitive features.

Purpose: The purpose of clearing limits is to prevent disturbance of those areas of the project site that are not designated for clearing or grading. This is important because limiting site disturbance is the single most effective method for reducing erosion. Clearing limits may also be used to control construction traffic, thus reducing the disturbance of soil and limiting the amount of sediment tracked off site.

When to Install: Clearing limits shall be installed prior to the clearing and/or grading of the site.

Measures to Use: Marking clearing limits by delineating the site with a continuous length of brightly colored survey tape is sometimes sufficient. The tape may be supported by vegetation or stakes, and it shall be 3 to 6 feet high and highly visible. Critical areas and their buffers require more substantial protection and shall be delineated with plastic or metal safety fences or stake and wire fences. Fencing may be required at the County's discretion to control construction traffic or at any location where greater

protection is warranted. Permanent fencing may also be used if desired by the applicant. Silt fence, in combination with survey flagging, is also an acceptable method of marking critical areas and their buffers.

D.2.1.1.1 PLASTIC OR METAL FENCE

Code: FE Symbol:

Purpose

Fencing is intended to (1) restrict clearing to approved limits; (2) prevent disturbance of critical areas, their buffers, and other areas required to be left undisturbed; (3) limit construction traffic to designated construction entrances or roads; and (4) protect areas where marking with survey tape may not provide adequate protection.

Conditions of Use

To establish clearing limits, plastic or metal fence may be used:

1. At the boundary of critical areas, their buffers, and other areas required to be left uncleared.
2. As necessary to control vehicle access to and on the site (see Sections D.2.1.4.1 and D.2.1.4.2).

Design and Installation Specifications

1. The fence shall be designed and installed according to the manufacturer's specifications.
2. The fence shall be at least 3 feet high and must be highly visible.
3. The fence shall not be wired or stapled to trees.

Maintenance Requirements

1. If the fence has been damaged or visibility reduced, it shall be repaired or replaced immediately and visibility restored.
2. Disturbance of a critical area, critical area buffer, native growth retention area, or any other area required to be left undisturbed shall be reported to the County for resolution.

D.2.1.2 COVER MEASURES

Temporary and permanent cover measures shall be provided to protect all disturbed areas, including the faces of cut and fill slopes. Temporary cover shall be installed if an area is to remain unworked for more than seven days during the dry season (May 1 to September 30) or for more than two consecutive working days during the wet season (October 1 to April 30). These time limits may be relaxed if an area poses a low risk of erosion due to soil type, slope gradient, anticipated weather conditions, or other factors. Conversely, the County may reduce these time limits if site conditions warrant greater protection (e.g., adjacent to significant aquatic resources or highly erosive soils) or if significant precipitation (see Section D.2.4.2) is expected. Any area to remain unworked for more than 30 days shall be seeded or sodded, unless the County determines that winter weather makes vegetation establishment infeasible. During the wet season, slopes and stockpiles at 3H:1V or steeper and with more than ten feet of vertical relief shall be covered if they are to remain unworked for more than 12 hours. Also during the wet season, the material necessary to cover all disturbed areas must be stockpiled on site. The intent of these cover requirements is to have as much area as possible covered during any period of precipitation.

Purpose: The purpose of covering exposed soils is to prevent erosion, thus reducing reliance on less effective methods that remove sediment after it is entrained in runoff. Cover is the only practical method of reducing turbidity in runoff. Structural measures, such as silt fences and sediment ponds, are only capable of removing coarse particles and in most circumstances have little to no effect on turbidity.

LAST REVISED:01/15/14

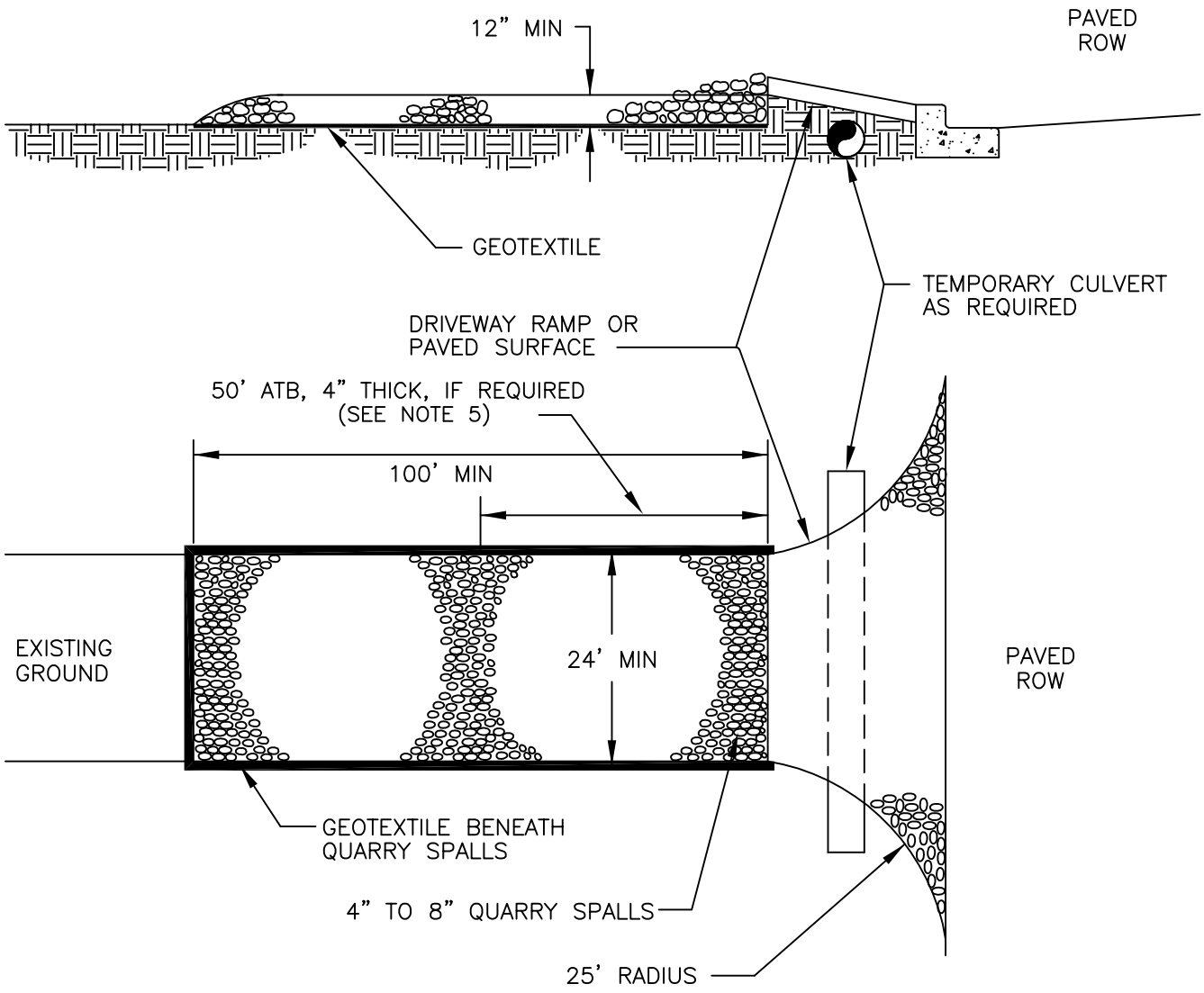

PLAT/COMMERCIAL

NOTES

1. PAD SHALL BE REMOVED AND REPLACED WHEN SOIL IS EVIDENT ON THE SURFACE OF THE PAD OR AS DIRECTED BY THE CITY CLEARING AND GRADING INSPECTOR.
2. PAD SHALL BE INSTALLED IN PLANTING STRIP AS APPROPRIATE.
3. PAD THICKNESS SHALL BE INCREASED IF SOIL CONDITIONS DICTATE AND/OR PER THE DIRECTION OF THE CITY CLEARING AND GRADING INSPECTOR.
4. CONTRACTOR RESPONSIBLE FOR CURB & GUTTER CONDITION.
5. ATB MAY BE REQUIRED PER PW INSPECTOR.
6. RECYCLED CONCRETE SHALL NOT BE USED FOR THE CONSTRUCTION ENTRANCE DUE TO HIGH LEVELS OF PH.

CITY OF KIRKLAND	
PLAN NO. CK-E.02	
CITY OF KIRKLAND WASHINGTON	TEMPORARY PLAT/COMMERCIAL CONST. ENTRANCE

LAST REVISED:04/15/12

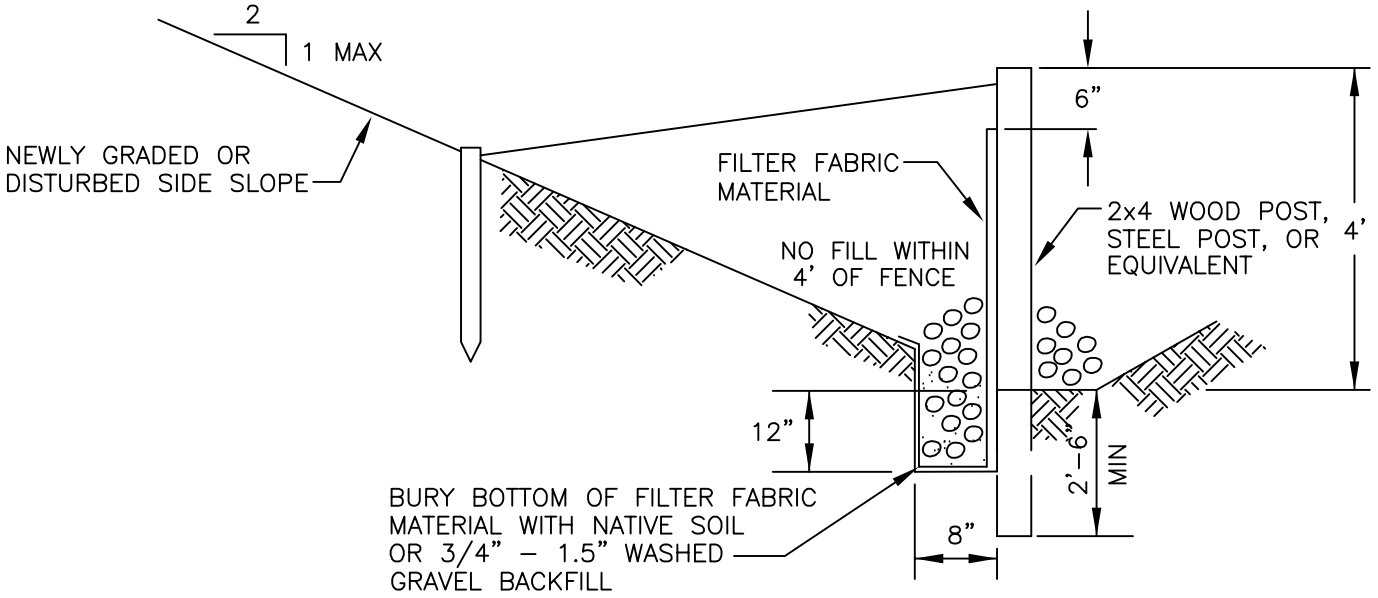

TYPICAL CROSS SECTION

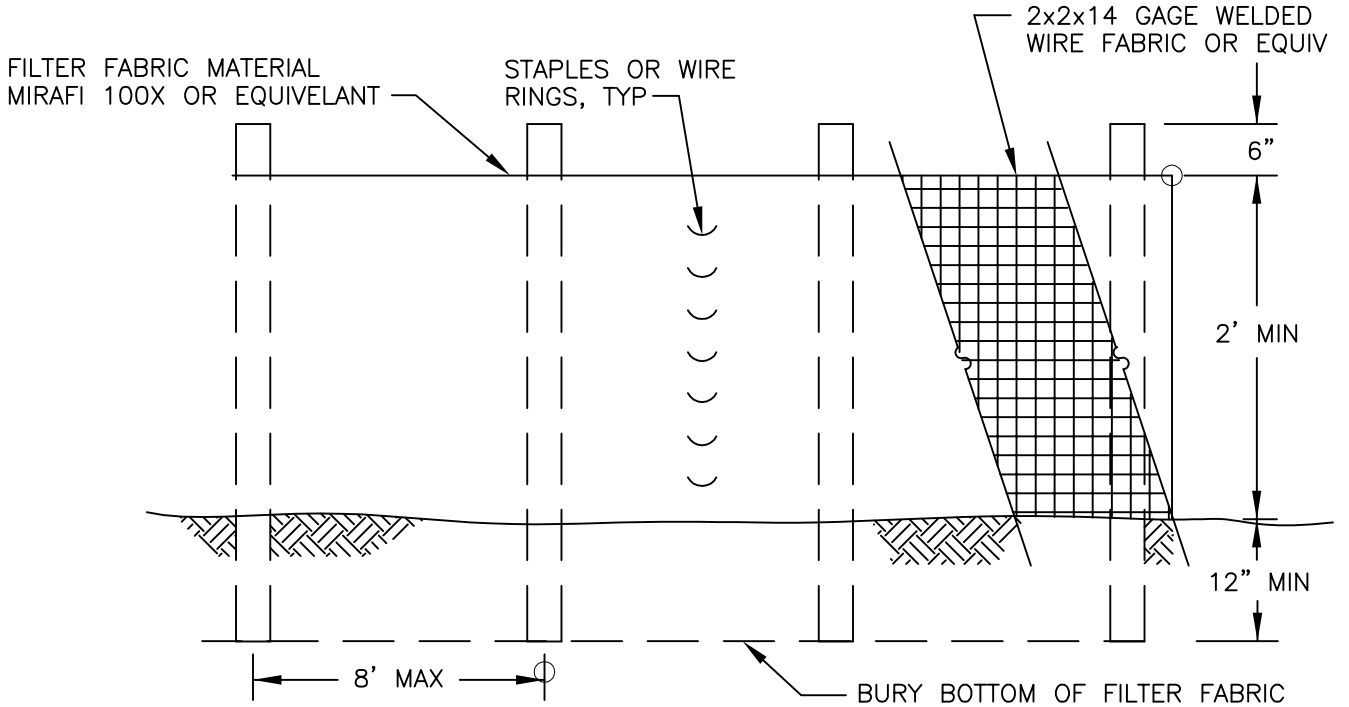

ELEVATION

NOTES

1. PREFAB FENCE ALLOWED IF REINFORCED AND APPROVED BY CITY INSPECTOR.
2. FENCE SHALL NOT BE INSTALLED ON SLOPES STEEPER THAN 2:1.
3. JOINTS IN FILTER FABRIC SHALL BE OVERLAPPED 6 INCHES AT POST.
4. USE STAPLES, WIRE RINGS, OR EQUIVALENT TO ATTACH FABRIC TO FENCE.
5. REMOVE SEDIMENT WHEN IT REACHES 1/3 FENCE HEIGHT.
6. LOCATION OF FENCING SHALL BE AS SHOWN ON APPROVED PLANS OR AS DIRECTED BY THE CITY.
7. MAXIMUM 100' SHEET OR OVERLAND FLOW PATH LENGTH TO SILT FENCE.
8. DO NOT DIRECT FLOWS GREATER THAN 0.5 CFS TO FENCE.
9. SILT FENCE SHOULD NOT BE INSTALLED IN STREAMS OR V-SHAPED DITCHES.

CITY OF KIRKLAND	
PLAN NO. CK-E.03	
CITY OF KIRKLAND WASHINGTON	SILT FENCE

D.2.1.2.6 TEMPORARY AND PERMANENT SEEDING

Code: SE Symbol:

Purpose

Seeding is intended to reduce erosion by stabilizing exposed soils. A well-established vegetative cover is one of the most effective methods of reducing erosion.

Conditions of Use

1. Seeding shall be used throughout the project on **disturbed areas** that have reached final grade or that will remain unworked for more than 30 days.
2. **Vegetation-lined channels** shall be seeded. Channels that will be vegetated should be installed before major earthwork and hydroseeded or covered with a Bonded Fiber Matrix (BFM).
3. **Retention/detention ponds** shall be seeded as required.
4. At the County's discretion, seeding without mulch during the **dry season** is allowed even though it will take more than seven days to develop an effective cover. Mulch is, however, recommended at all times because it protects seeds from heat, moisture loss, and transport due to runoff.
5. At the beginning of the **wet season**, all disturbed areas shall be reviewed to identify which ones can be seeded in preparation for the winter rains (see Section D.2.4.2). Disturbed areas shall be seeded within one week of the beginning of the wet season. A sketch map of those areas to be seeded and those areas to remain uncovered shall be submitted to the DPER inspector. The DPER inspector may require seeding of additional areas in order to protect surface waters, adjacent properties, or drainage facilities.
6. At final site stabilization, all disturbed areas not otherwise vegetated or stabilized shall be seeded and mulched (see Section D.2.4.5).

Design and Installation Specifications

1. The best **time to seed** is April 1 through June 30, and September 1 through October 15. Areas may be seeded between July 1 and August 31, but irrigation may be required in order to grow adequate cover. Areas may also be seeded during the winter months, but it may take several months to develop a dense groundcover due to cold temperatures. The application and maintenance of mulch is critical for winter seeding.
2. To prevent seed from being washed away, confirm that **all required surface water control measures** have been installed.
3. The **seedbed** should be firm but not compacted because soils that are well compacted will not vegetate as quickly or thoroughly. Slopes steeper than 3H:1V shall be surface roughened. Roughening can be accomplished in a variety of ways, but the typical method is track walking, or driving a crawling tractor up and down the slope, leaving cleat imprints parallel to the slope contours.
4. In general, 10-20-20 N-P-K (nitrogen-phosphorus-potassium) **fertilizer** may be used at a rate of 90 pounds per acre. Slow-release fertilizers are preferred because they are more efficient and have fewer environmental impacts. It is recommended that areas being seeded for final landscaping conduct soil tests to determine the exact type and quantity of fertilizer needed. This will prevent the over-application of fertilizer. Disturbed areas within 200 feet of water bodies and wetlands must use slow-release low-phosphorus fertilizer (typical proportions 3-1-2 N-P-K).
5. The following requirements apply to **mulching**:
   a) Mulch is always required for seeding slopes greater than 3H:1V (see Section D.2.1.2.2).

b) If seeding during the wet season, mulch is required.

c) The use of mulch may be required during the dry season at the County's discretion if grass growth is expected to be slow, the soils are highly erodible due to soil type or gradient, there is a water body close to the disturbed area, or significant precipitation (see Section D.2.4.2) is anticipated before the grass will provide effective cover.

d) Mulch may be applied on top of the seed or simultaneously by hydroseeding.

6. **Hydroseeding** is allowed as long as tackifier is included. Hydroseeding with wood fiber mulch is adequate during the dry season. During the wet season, the application rate shall be doubled because the mulch and tackifier used in hydroseeding break down fairly rapidly. It may be necessary in some applications to include straw with the wood fiber, but this can be detrimental to germination.

7. Areas to be permanently landscaped shall use **soil amendments**. Good quality topsoil shall be tilled into the top six inches to reduce the need for fertilizer and improve the overall soil quality. Most native soils will require the addition of four inches of well-rotted compost to be tilled into the soil to provide a good quality topsoil. Compost used should meet specifications provided in Reference 11-C of the *SWDM*.

8. The **seed mixes** listed below include recommended mixes for both temporary and permanent seeding. These mixes, with the exception of the wetland mix, shall be applied at a rate of 120 pounds per acre. This rate may be reduced if soil amendments or slow-release fertilizers are used. Local suppliers should be consulted for their recommendations because the appropriate mix depends on a variety of factors, including exposure, soil type, slope, and expected foot traffic. Alternative seed mixes approved by the County may be used.

Table D.2.1.2.B presents the standard mix for those areas where just a temporary vegetative cover is required.

TABLE D.2.1.2.B TEMPORARY EROSION CONTROL SEED MIX

	% Weight	% Purity	% Germination
Chewings or red fescue *Festuca rubra var. commutata* or *Festuca rubra*	40	98	90
Annual or perennial rye *Lolium multiflorum* or *Lolium perenne*	40	98	90
Redtop or colonial bentgrass *Agrostis alba* or *Agrostis tenuis*	10	92	85
White dutch clover *Trifolium repens*	10	98	90

Table D.2.1.2.C provides just one recommended possibility for landscaping seed.

TABLE D.2.1.2.C LANDSCAPING SEED MIX			
	% Weight	**% Purity**	**% Germination**
Perennial rye blend *Lolium perenne*	70	98	90
Chewings and red fescue blend *Festuca rubra var. commutata* or *Festuca rubra*	30	98	90

This turf seed mix in Table D.2.1.2.D is for dry situations where there is no need for much water. The advantage is that this mix requires very little maintenance.

TABLE D.2.1.2.D LOW-GROWING TURF SEED MIX			
	% Weight	**% Purity**	**% Germination**
Dwarf tall fescue (several varieties) *Festuca arundinacea var.*	45	98	90
Dwarf perennial rye (Barclay) *Lolium perenne var. barclay*	30	98	90
Red fescue *Festuca rubra*	20	98	90
Colonial bentgrass *Agrostis tenuis*	5	98	90

Table D.2.1.2.E presents a mix recommended for bioswales and other intermittently wet areas. Sod shall generally not be used for bioswales because the seed mix is inappropriate for this application. Sod may be used for lining ditches to prevent erosion, but it will provide little water quality benefit during the wet season.

TABLE D.2.1.2.E BIOSWALE SEED MIX*			
	% Weight	**% Purity**	**% Germination**
Tall or meadow fescue *Festuca arundinacea* or *Festuca elatior*	75-80	98	90
Seaside/Creeping bentgrass *Agrostis palustris*	10-15	92	85
Redtop bentgrass *Agrostis alba* or *Agrostis gigantea*	5-10	90	80
* Modified Briargreen, Inc. Hydroseeding Guide Wetlands Seed Mix			

The seed mix shown in Table D.2.1.2.F is a recommended low-growing, relatively non-invasive seed mix appropriate for very wet areas that are not regulated wetlands (if planting in wetland areas, see Section 6.3.1 of the King County *Surface Water Design Manual*). Other mixes may be appropriate, depending on the soil type and hydrology of the area. Apply this mixture at a rate of 60 pounds per acre.

TABLE D.2.1.2.F WET AREA SEED MIX*			
	% Weight	**% Purity**	**% Germination**
Tall or meadow fescue *Festuca arundinacea* or *Festuca elatior*	60-70	98	90
Seaside/Creeping bentgrass *Agrostis palustris*	10-15	98	85
Meadow foxtail *Alepocurus pratensis*	10-15	90	80
Alsike clover *Trifolium hybridum*	1-6	98	90
Redtop bentgrass *Agrostis alba*	1-6	92	85
* Modified Briargreen, Inc. Hydroseeding Guide Wetlands Seed Mix			

The meadow seed mix in Table D.2.1.2.G is recommended for areas that will be maintained infrequently or not at all and where colonization by native plants is desirable. Likely applications include rural road and utility right-of-way. Seeding should take place in September or very early October in order to obtain adequate establishment prior to the winter months. The appropriateness of clover in the mix may need to be considered as this can be a fairly invasive species. If the soil is amended, the addition of clover may not be necessary.

TABLE D.2.1.2.G MEADOW SEED MIX			
	% Weight	**% Purity**	**% Germination**
Redtop or Oregon bentgrass *Agrostis alba* or *Agrostis oregonensis*	40	92	85
Red fescue *Festuca rubra*	40	98	90
White dutch clover *Trifolium repens*	20	98	90

Maintenance Standards for Temporary and Permanent Seeding

1. Any seeded areas that fail to establish at least 80 percent cover within one month shall be reseeded. If reseeding is ineffective, an alternate method, such as sodding or nets/blankets, shall be used. If winter weather prevents adequate grass growth, this time limit may be relaxed at the discretion of the County when critical areas would otherwise be protected.

2. After adequate cover is achieved, any areas that experience erosion shall be re-seeded and protected by mulch. If the erosion problem is drainage related, the problem shall be fixed and the eroded area re-seeded and protected by mulch.
3. Seeded areas shall be supplied with adequate moisture, but not watered to the extent that it causes runoff.

D.2.1.2.7 SODDING

Code: SO Symbol:

Purpose

The purpose of sodding is to establish permanent turf for immediate erosion protection and to stabilize drainage ways where concentrated overland flow will occur.

Conditions of Use

Sodding may be used in the following areas:

1. Disturbed areas that require short-term or long-term cover
2. Disturbed areas that require immediate vegetative cover
3. All waterways that require vegetative lining (except biofiltration swales—the seed mix used in most sod is not appropriate for biofiltration swales). Waterways may also be seeded rather than sodded, and protected with a net or blanket (see Section D.2.1.2.5).

Design and Installation Specifications

Sod shall be free of weeds, of uniform thickness (approximately 1-inch thick), and shall have a dense root mat for mechanical strength.

The following steps are recommended for sod installation:

1. Shape and smooth the surface to final grade in accordance with the approved grading plan.
2. Amend four inches (minimum) of well-rotted compost into the top eight inches of the soil if the organic content of the soil is less than ten percent. Compost used shall meet compost specifications per *SWDM* Reference 11-C.
3. Fertilize according to the supplier's recommendations. Disturbed areas within 200 feet of water bodies and wetlands must use non-phosphorus fertilizer.
4. Work lime and fertilizer 1 to 2 inches into the soil, and smooth the surface.
5. Lay strips of sod beginning at the lowest area to be sodded and perpendicular to the direction of water flow. Wedge strips securely into place. Square the ends of each strip to provide for a close, tight fit. Stagger joints at least 12 inches. Staple on slopes steeper than 3H:1V.
6. Roll the sodded area and irrigate.
7. When sodding is carried out in alternating strips or other patterns, seed the areas between the sod immediately after sodding.

Maintenance Standards

If the grass is unhealthy, the cause shall be determined and appropriate action taken to reestablish a healthy groundcover. If it is impossible to establish a healthy groundcover due to frequent saturation, instability, or some other cause, the sod shall be removed, the area seeded with an appropriate mix, and protected with a net or blanket.

TABLE D.2.1.2.A MULCH STANDARDS AND GUIDELINES			
Mulch Material	**Quality Standards**	**Application Rates**	**Remarks**
Straw	Air-dried; free from undesirable seed and coarse material	2"-3" thick; 5 bales per 1000 sf or 2-3 tons per acre	Cost-effective protection when applied with adequate thickness. Hand-application generally requires greater thickness than blown straw. Straw should be crimped to avoid wind blow. The thickness of straw may be reduced by half when used in conjunction with seeding.
Wood Fiber Cellulose	No growth inhibiting factors	Approx. 25-30 lbs per 1000 sf or 1500-2000 lbs per acre	Shall be applied with hydromulcher. Shall not be used without seed and tackifier unless the application rate is at least doubled. Some wood fiber with very long fibers can be effective at lower application rates and without seed or tackifier.
Compost	No visible water or dust during handling. Must be purchased from supplier with Solid Waste Handling Permit.	2" thick min.; approx. 100 tons per acre (approx. 1.5 cubic feet per square yard)	More effective control can be obtained by increasing thickness to 3" (2.25 cubic feet per square yard). Excellent mulch for protecting final grades until landscaping because it can be directly seeded or tilled into soil as an amendment. Compost may not be used in Sensitive Lake[7] basins unless analysis of the compost shows no phosphorous release.
Hydraulic Matrices (Bonded Fiber Matrix)	This mulch category includes hydraulic slurries composed of wood fiber, paper fiber or a combination of the two held together by a binding system. The BFM shall be a mixture of long wood fibers and various bonding agents.	Apply at rates from 3,000 lbs per acre to 4,000 lbs per acre and based on manufacturers recommendations	The BFM shall not be applied immediately before, during or immediately after rainfall so that the matrix will have an opportunity to dry for 24 hours after installation. Application rates beyond 2,500 pounds may interfere with germination and are not usually recommended for turf establishment. BFM is generally a matrix where all fiber and binders are in one bag, rather than having to mix components from various manufacturers to create a matrix. BFMs can be installed via helicopter in remote areas. They are approximately $1,000 per acre cheaper to install.
Chipped Site Vegetation	Average size shall be several inches.	2" minimum thickness	This is a cost-effective way to dispose of debris from clearing and grubbing, and it eliminates the problems associated with burning. Generally, it should not be used on slopes above approx. 10% because of its tendency to be transported by runoff. It is not recommended within 200 feet of surface waters. If seeding is expected shortly after mulch, the decomposition of the chipped vegetation may tie up nutrients important to grass establishment.

[7] *Sensitive lake* means a lake that has proved to be particularly prone to eutrophication; the County gives this designation when an active input plan has been adopted to limit the amount of phosphorous entering the lake.

LAST REVISED: 03/5/13

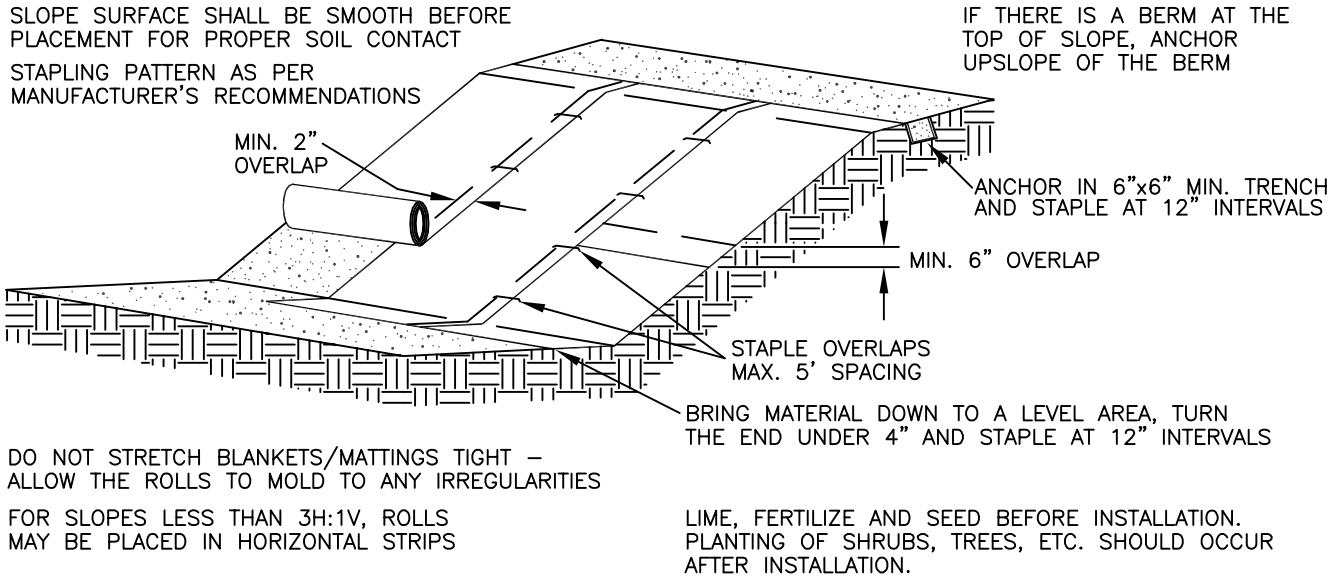

DO NOT STRETCH BLANKETS/MATTINGS TIGHT – ALLOW THE ROLLS TO MOLD TO ANY IRREGULARITIES

FOR SLOPES LESS THAN 3H:1V, ROLLS MAY BE PLACED IN HORIZONTAL STRIPS

LIME, FERTILIZE AND SEED BEFORE INSTALLATION. PLANTING OF SHRUBS, TREES, ETC. SHOULD OCCUR AFTER INSTALLATION.

NET & BLANKET INSTALLATION

NOT TO SCALE

NOTES:

1. IF BLANKET IS NOT LONG ENOUGH TO COVER THE ENTIRE SLOPE LENGTH, THE TRAILING EDGE OF THE UPPER BLANKET SHOULD OVERLAP THE LEADING EDGE OF THE LOWER BLANKET AND BE STAPLED.

2. MULCH IS REQUIRED FOR NETS, AND NOT REQUIRED FOR BLANKETS.

3. USE 100% BIODEGRADABLE BLANKETS IN SENSITIVE AREAS.

4. MAINTAIN GOOD CONTACT WITH THE GROUND. EROSION MUST NOT OCCUR BENEATH THE BLANKET.

5. INSPECT NETS AND BLANKETS AFTER EACH SIGNIFICANT STORM; MAINTAIN AND REPAIR PROMPTLY.

CITY OF KIRKLAND	
PLAN NO. CK– E.06	
CITY OF KIRKLAND WASHINGTON	NETS & BLANKETS

D.2.1.2.3 NETS AND BLANKETS

Code: NE Symbol:

Purpose

Erosion control nets and blankets are intended to prevent erosion and hold seed and mulch in place on steep slopes and in channels so that vegetation can become well established. In addition, some nets and blankets can be used to permanently reinforce turf to protect drainage ways during high flows. Nets are strands of material woven into an open, but high-tensile strength net (for example, jute matting). Blankets are strands of material that are not tightly woven, but instead form a layer of interlocking fibers, typically held together by a biodegradable or photodegradable netting (for example, excelsior or straw blankets). They generally have lower tensile strength than nets, but cover the ground more completely. Coir (coconut fiber) fabric comes as both nets and blankets.

Conditions of Use

Erosion control nets and blankets should be used:

1. For permanent stabilization of slopes 2H:1V or greater and with more than 10 feet of vertical relief.
2. In conjunction with seed for final stabilization of a slope, not for temporary cover. However, they may be used for temporary applications as long as the product is not damaged by repeated handling. In fact, this method of slope protection is superior to plastic sheeting, which generates high-velocity runoff (see Section D.2.1.2.4).
3. For drainage ditches and swales (highly recommended). The application of appropriate netting or blanket to drainage ditches and swales can protect bare soil from channelized runoff while vegetation is established. Nets and blankets also can capture a great deal of sediment due to their open, porous structure. Synthetic nets and blankets may be used to permanently stabilize channels and may provide a cost-effective, environmentally preferable alternative to riprap.

Design and Installation Specifications

1. See Figure D.2.1.2.B and Figure D.2.1.2.C for **typical orientation and installation** of nettings and blankets. *Note: Installation is critical to the effectiveness of these products. If good ground contact is not achieved, runoff can concentrate under the product, resulting in significant erosion.*
2. With the variety of products available, it is impossible to cover all the details of appropriate use and installation. Therefore, it is critical that the design engineer thoroughly consults the **manufacturer's information** and that a site visit takes place in order to insure that the product specified is appropriate.
3. Jute matting must be used in conjunction with mulch (Section D.2.1.2.2). Excelsior, woven straw blankets, and coir (coconut fiber) blankets may be installed without mulch. There are many other types of **erosion control nets and blankets** on the market that may be appropriate in certain circumstances. Other types of products will have to be evaluated individually. In general, most nets (e.g., jute matting) require mulch in order to prevent erosion because they have a fairly open structure. Blankets typically do not require mulch because they usually provide complete protection of the surface.
4. Purely synthetic blankets are allowed but shall only be used for long-term stabilization of waterways. The organic blankets authorized above are better for slope protection and short-term waterway protection because they retain moisture and provide organic matter to the soil, substantially improving the speed and success of re-vegetation.

Maintenance Standards

1. Good contact with the ground must be maintained, and there must not be erosion beneath the net or

blanket.

2. Any areas of the net or blanket that are damaged or not in close contact with the ground shall be repaired and stapled.
3. If erosion occurs due to poorly controlled drainage, the problem shall be fixed and the eroded area protected.

FIGURE D.2.1.2.B WATERWAY INSTALLATION

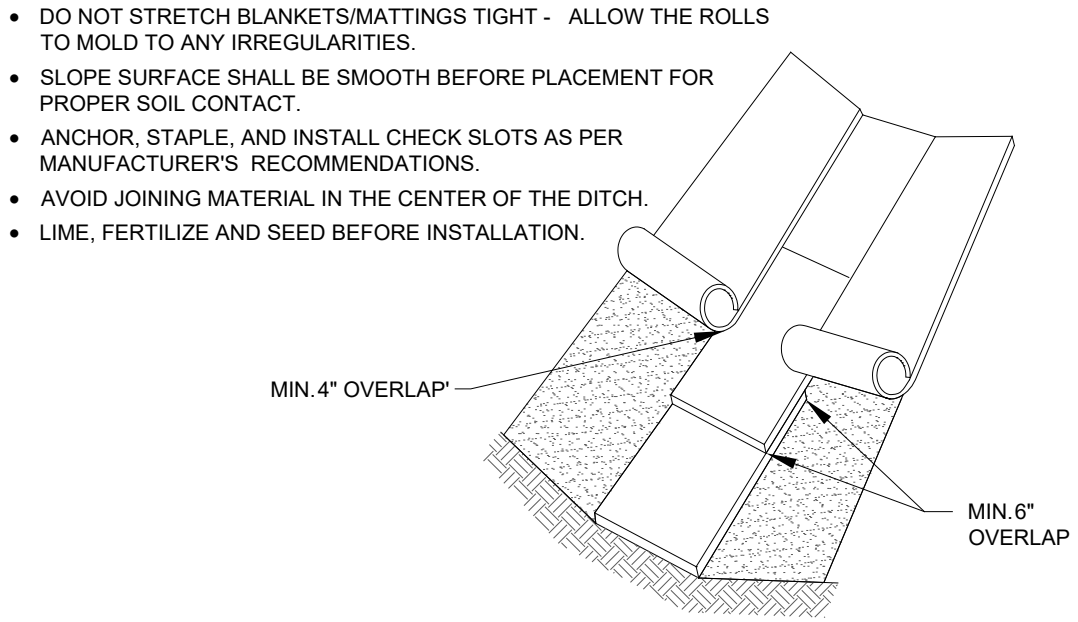

FIGURE D.2.1.2.C SLOPE INSTALLATION

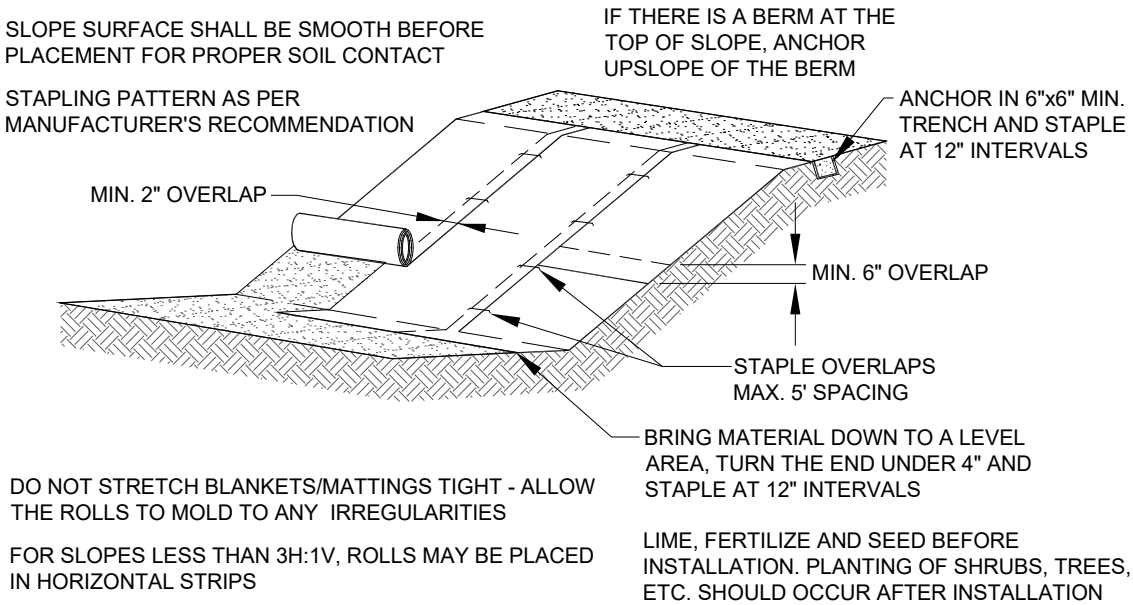

D.2.1.2.4 PLASTIC COVERING

Code: PC Symbol: PC

Purpose

Plastic covering provides immediate, short-term erosion protection to slopes and disturbed areas.

Conditions of Use

1. Plastic covering may be used on disturbed areas that require cover measures for less than 30 days.
2. Plastic is particularly useful for protecting cut and fill slopes and stockpiles. *Note: The relatively rapid breakdown of most polyethylene sheeting makes it unsuitable for long-term applications.*
3. Clear plastic sheeting may be used over newly-seeded areas to create a greenhouse effect and encourage grass growth. Clear plastic should not be used for this purpose during the summer months because the resulting high temperatures can kill the grass.
4. Due to rapid runoff caused by plastic sheeting, this method shall not be used upslope of areas that might be adversely impacted by concentrated runoff. Such areas include steep and/or unstable slopes.

Note: There have been many problems with plastic, usually attributable to poor installation and maintenance. However, the material itself can cause problems, even when correctly installed and maintained, because it generates high-velocity runoff and breaks down quickly due to ultraviolet radiation. In addition, if the plastic is not completely removed, it can clog drainage system inlets and outlets. It is highly recommended that alternatives to plastic sheeting be used whenever possible and that its use be limited.

Design and Installation Specifications

1. See Figure D.2.1.2.D for details.
2. Plastic sheeting shall have a minimum thickness of 0.06 millimeters.
3. If erosion at the toe of a slope is likely, a gravel berm, riprap, or other suitable protection shall be installed at the toe of the slope in order to reduce the velocity of runoff.

FIGURE D.2.1.2.D PLASTIC COVERING

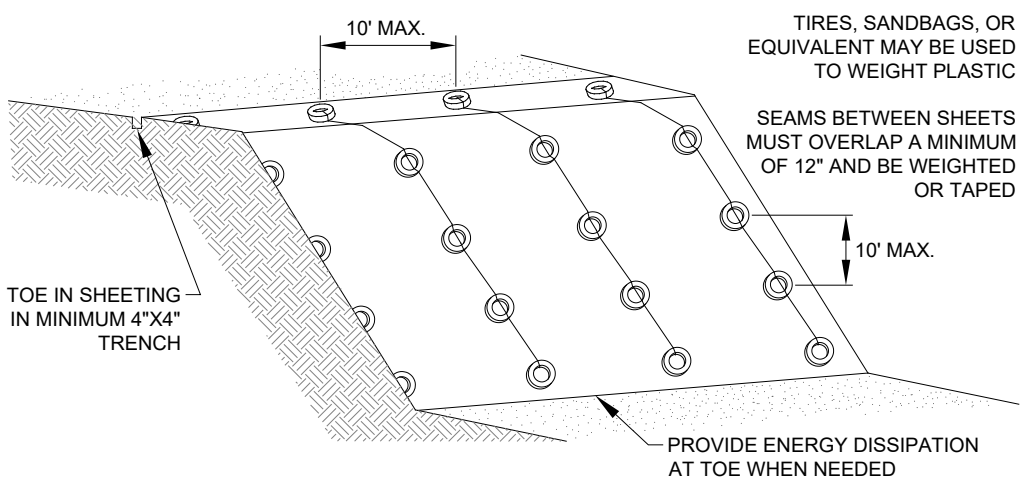

Maintenance Standards for Plastic Covering

1. Torn sheets must be replaced and open seams repaired.
2. If the plastic begins to deteriorate due to ultraviolet radiation, it must be completely removed and replaced.
3. When the plastic is no longer needed, it shall be completely removed.

D.2.1.2.5 STRAW WATTLES

Code: SW

Symbol:

Purpose

Wattles are erosion and sediment control barriers consisting of straw wrapped in biodegradable tubular plastic or similar encasing material. Wattles may reduce the velocity and can spread the flow of rill and sheet runoff, and can capture and retain sediment. Straw wattles are typically 8 to 10 inches in diameter and 25 to 30 feet in length. The wattles are placed in shallow trenches and staked along the contour of disturbed or newly constructed slopes.

Conditions of Use

1. Install on disturbed areas that require immediate erosion protection.
2. Use on slopes requiring stabilization until permanent vegetation can be established.
3. Can be used along the perimeter of a project, as a check dam in unlined ditches and around temporary stockpiles
4. Wattles can be staked to the ground using willow cuttings for added revegetation.
5. Rilling can occur beneath and between wattles if not properly entrenched, allowing water to pass below and between wattles

Design and Installation Specifications

1. It is critical that wattles are installed perpendicular to the flow direction and parallel to the slope contour.
2. Narrow trenches should be dug across the slope, on contour, to a depth of 3 to 5 inches on clay soils and soils with gradual slopes. On loose soils, steep slopes, and during high rainfall events, the trenches should be dug to a depth of 5 to 7 inches, or ½ to 2/3 of the thickness of the wattle.
3. Start construction of trenches and installing wattles from the base of the slope and work uphill. Excavated material should be spread evenly along the uphill slope and compacted using hand tamping or other method. Construct trenches at contour intervals of 3 to 30 feet apart depending on the steepness of the slope, soil type, and rainfall. The steeper the slope the closer together the trenches should be constructed.
4. Install the wattles snugly into the trenches and abut tightly end to end. Do not overlap the ends.
5. Install stakes at each end of the wattle, and at 4 foot centers along the entire length of the wattle.
6. If required, install pilot holes for the stakes using a straight bar to drive holes through the wattle and into the soil.
7. At a minimum, wooden stakes should be approximately ¾ x ¾ x 24 inches. Willow cuttings or 3/8 inch rebar can also be used for stakes.

LAST REVISED:04/15/12

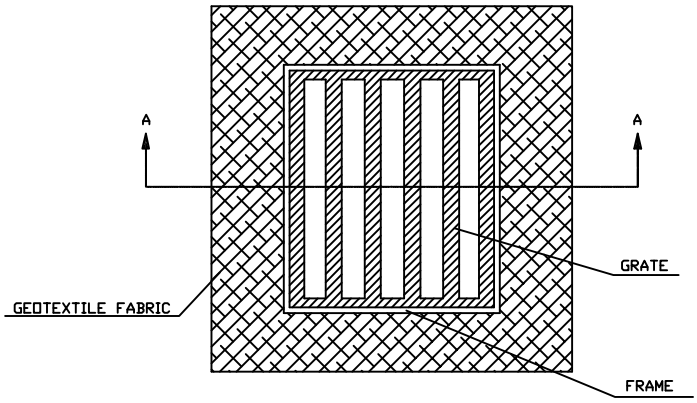

PLAN VIEW
NTS

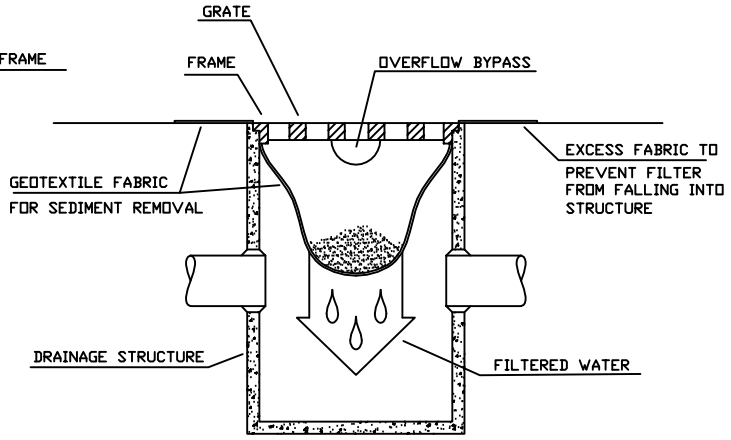

STORM DRAIN PROTECTION INSERT
SECTION A-A
NTS

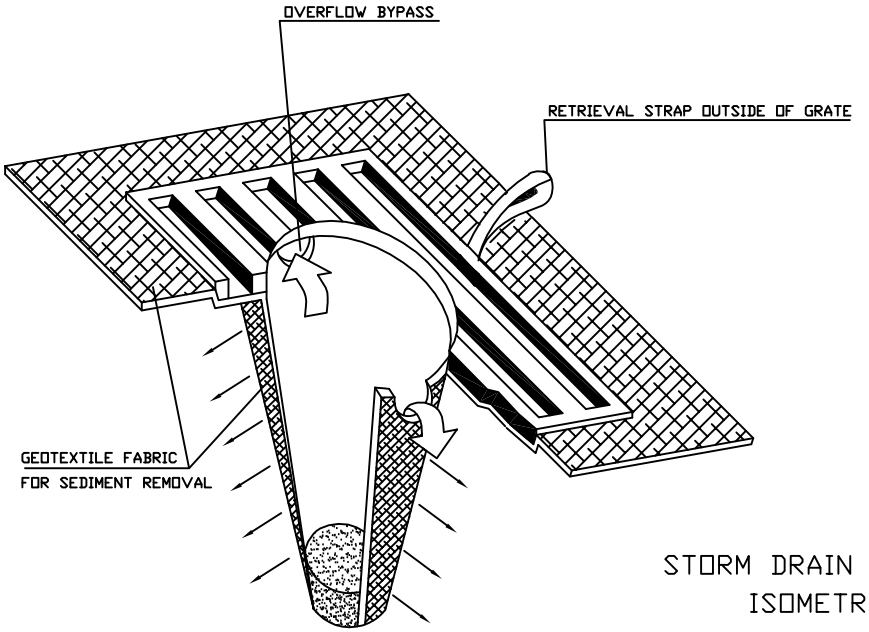

STORM DRAIN PROTECTION INSERT
ISOMETRIC VIEW (TYP.)
NTS

CITY OF KIRKLAND	
PLAN NO. CK-E.11	
CITY OF KIRKLAND WASHINGTON	STORM DRAIN PROTECTION INSERT

(Sections D.2.1.5 and D.2.1.6, respectively). In some circumstances, however, the approved model 10-year 15-minute peak flow should be used. Examples of such circumstances include the following:

- Sites that are within ¼ mile of salmonid streams, wetlands, and designated sensitive lakes such as Lake Sammamish
- Sites where significant clearing and grading is likely to occur during the wet season
- Sites with downstream erosion or sedimentation problems.

Natural Vegetation: Whenever possible, sediment-laden water shall be discharged into onsite, relatively level, vegetated areas. This is the only way to effectively remove fine particles from runoff. This can be particularly useful after initial treatment in a sediment retention facility. The areas of release must be evaluated on a site-by-site basis in order to determine appropriate locations for and methods of releasing runoff. Vegetated wetlands shall not be used for this purpose. Frequently, it may be possible to pump water from the collection point at the downhill end of the site to an upslope vegetated area. Pumping shall only augment the treatment system, not replace it because of the possibility of pump failure or runoff volume in excess of pump capacity.

D.2.1.5.1 SEDIMENT TRAP

Code: ST Symbol: 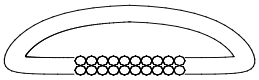

Purpose

Sediment traps remove sediment from runoff originating from disturbed areas of the site. Sediment traps are typically designed to only remove sediment as small as medium silt (0.02 mm). As a consequence, they usually only result in a small reduction in turbidity.

Conditions of Use

A sediment trap shall be used where the contributing drainage area is 3 acres or less.

Design and Installation Specifications

1. See Figure D.2.1.5.A for details.
2. If permanent runoff control facilities are part of the project, they should be used for sediment retention (see "**Use of Permanent Drainage Facilities**" on page D-47).
3. To determine the trap geometry, first calculate the design surface area (*SA*) of the trap, measured at the invert of the weir. Use the following equation:

$$SA = FS(Q_2/V_S)$$

where Q_2 = Design inflow (cfs) from the contributing drainage area based on the developed condition 2-year or 10-year peak discharge using the approved model with 15-minute time steps as computed in the hydrologic analysis. The approved model 10-year 15-minute peak flow shall be used if the project size, expected timing and duration of construction, or downstream conditions warrant a higher level of protection, or if the pond discharge path leaves the ***site*** (note provisions must made to prevent increases in the existing site conditions 2-year and 10-year runoff peaks discharging from the project ***site*** during construction, see Section D.3.9, Flow Control). If no hydrologic analysis is required, the Rational Method may be used (Section 3.2.1 of the King County *Surface Water Design Manual*).

V_S = The settling velocity (ft/sec) of the soil particle of interest. The 0.02 mm (medium silt) particle with an assumed density of 2.65 g/cm^3 has been selected as the particle of interest and has a settling velocity (V_S) of 0.00096 ft/sec.

FS = A safety factor of 2 to account for non-ideal settling.

Therefore, the equation for computing surface area becomes:

$$SA = 2 \times Q_2/0.00096 \quad \text{or} \quad 2080 \text{ square feet per cfs of inflow}$$

Note: Even if permanent facilities are used, they must still have a surface area that is at least as large as that derived from the above formula. If they do not, the pond must be enlarged.

4. To aid in determining sediment depth, all traps shall have a staff gage with a prominent mark one foot above the bottom of the trap.

Maintenance Standards

1. Sediment shall be removed from the trap when it reaches 1 foot in depth.
2. Any damage to the trap embankments or slopes shall be repaired.

FIGURE D.2.1.5.A SEDIMENT TRAP

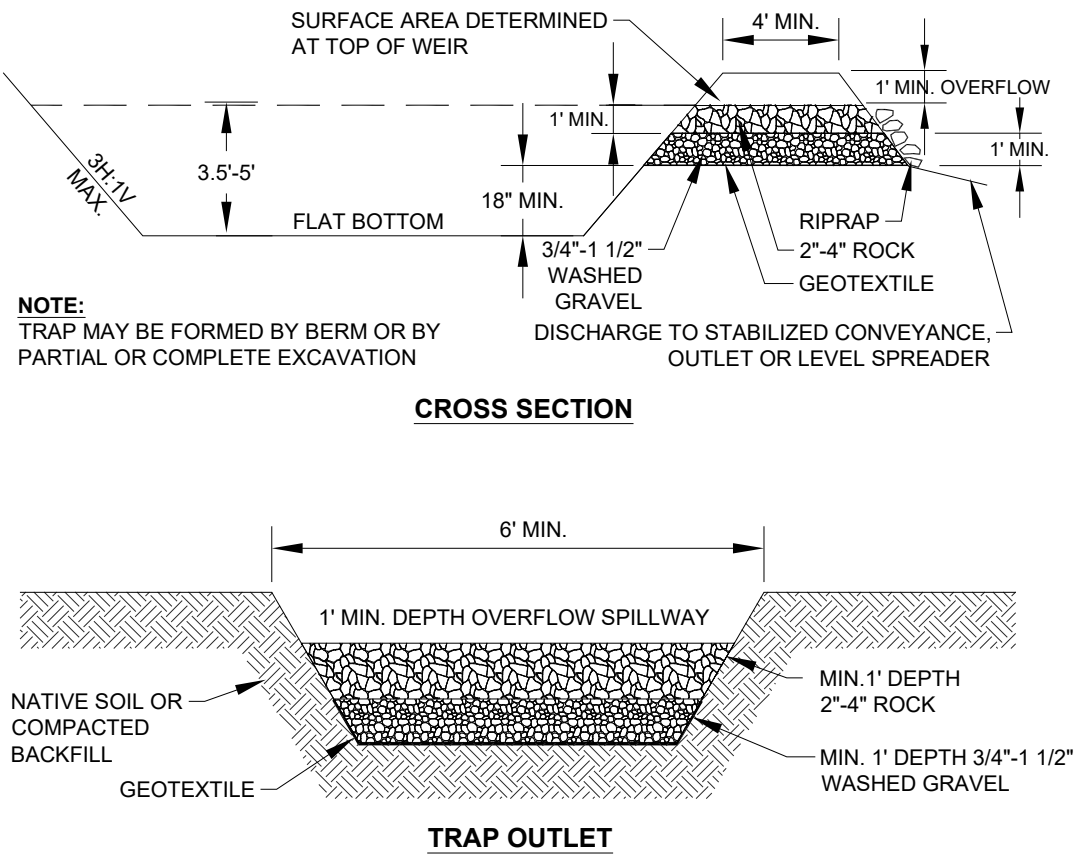

Attachment C
Alternative Construction BMPs

LAST REVISED: 04/15/12

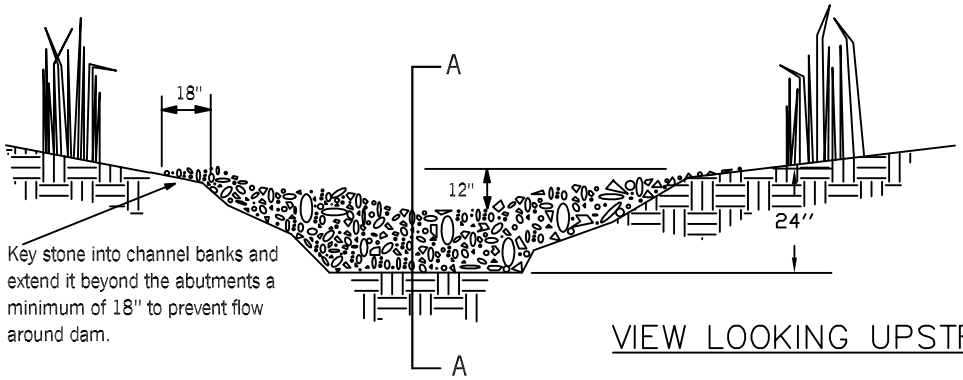

VIEW LOOKING UPSTREAM

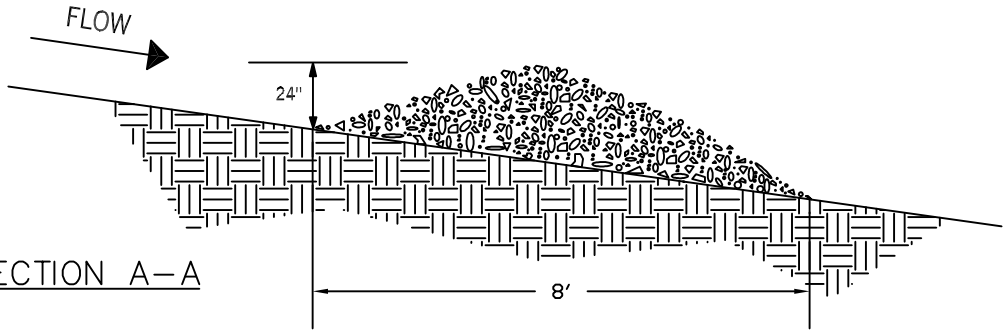

SECTION A–A

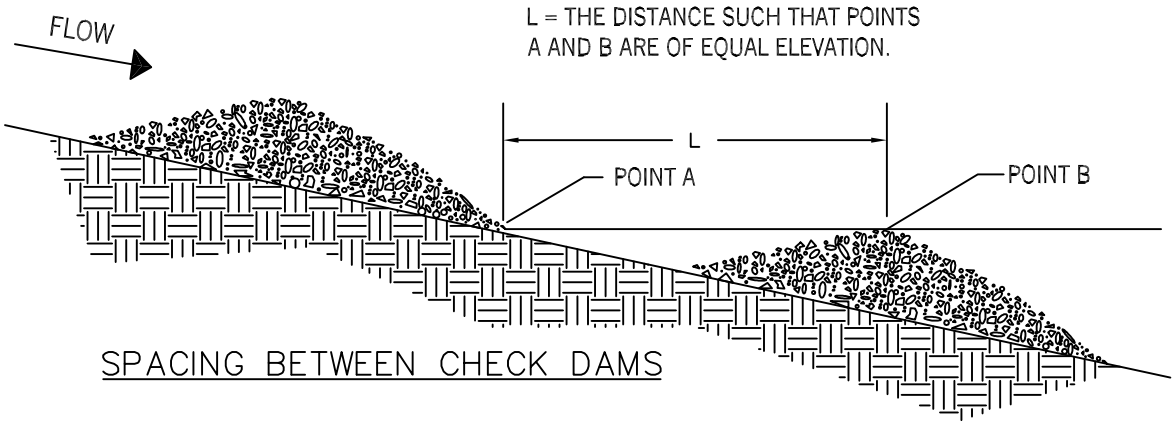

SPACING BETWEEN CHECK DAMS

NOTES:

1. CHECK DAMS TO BE CONSTRUCTED OF ROCK, PEA-GRAVEL FILLED BAGS, SAND BAGS, OR EQUIVALENT APPROVED BY PUBLIC WORKS.
2. PLACE CHECK DAMS PERPENDICULAR TO FLOW OF WATER.
3. SIDE SLOPES ARE 2:1 (H:V) OR FLATTER.
4. USE FILTER FABRIC FOUNDATION UNDER CHECK DAM.
5. ROCK CHECK DAMS SHALL BE CONSTRUCTED OF APPROPRIATELY SIZED ROCK, AND PLACED BY HAND OR MECHANICAL MEANS (NO DUMPING OF ROCK TO FORM DAM).
6. INSPECT DAM AFTER EACH SIGNIFICANT STORM; MAINTAIN AND REPAIR PROMPTLY.

NOT TO SCALE

CITY OF KIRKLAND	
PLAN NO. CK– E.07	
CITY OF KIRKLAND WASHINGTON	CHECK DAM

LAST REVISED:04/15/12

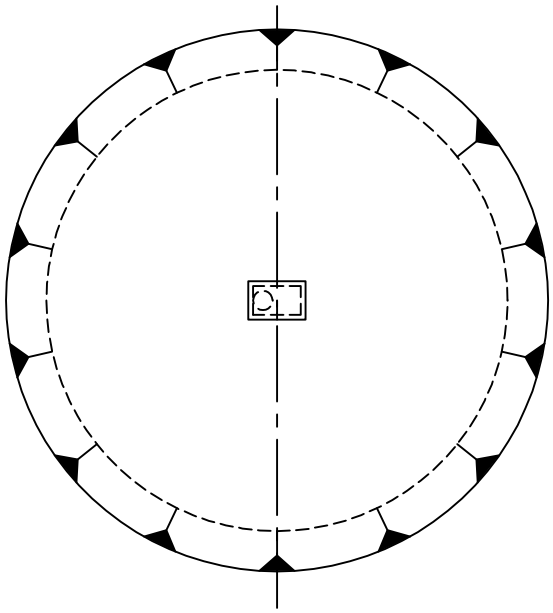

PLAN

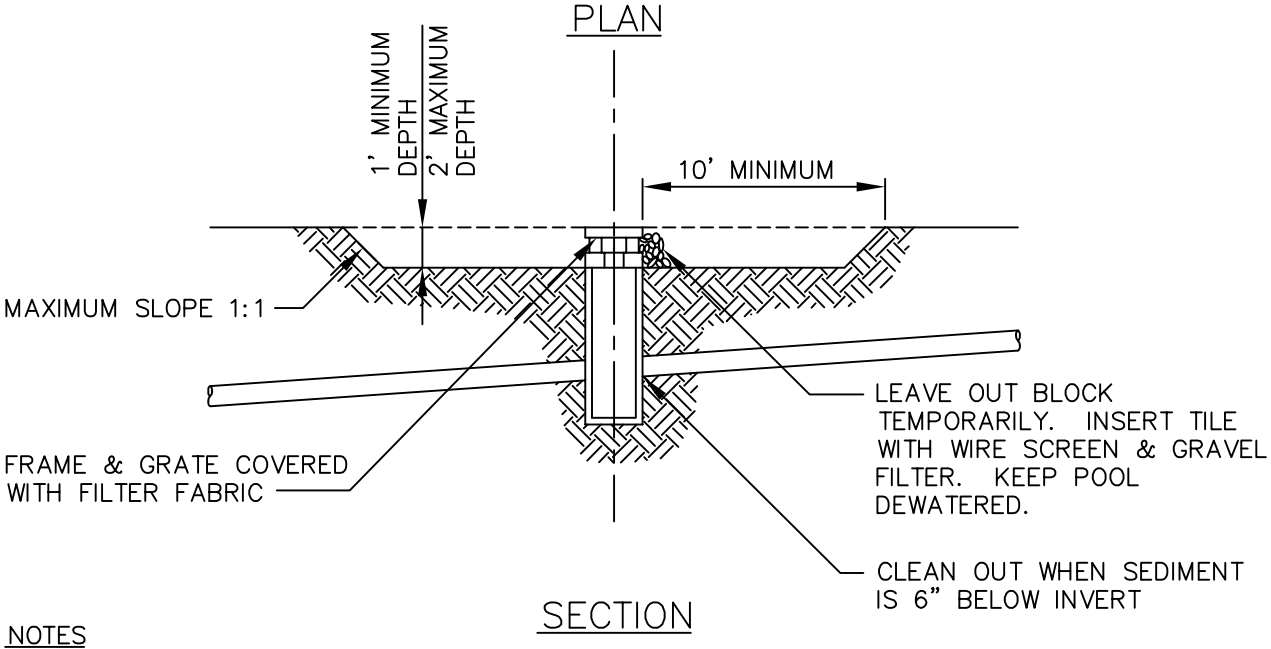

SECTION

NOTES

1. PROTECT INLETS DURING CONSTRUCTION. KEEP SEDIMENT OUT OF THE STORM DRAINAGE SYSTEM. USE HALF-CIRCLE BEHIND CURB INLETS DURING STREET CONSTRUCTION. MODIFY PROTECTION AS CONSTRUCTION PROGRESSES.

2. CIRCULAR SHAPE IS NOT ESSENTIAL; VARY SHAPE TO FIT DRAINAGE AREA AND TERRAIN. OBSERVE TO CHECK TRAP EFFICENCY AND MODIFY AS NECESSARY TO INSURE SATISFACTORY TRAPPING OF SEDIMENT. CAN BE ADAPTED TO THRU-CURB INLET.

3. ALLOW 2' MINIMUM OVERHANG OR FILTER FABRIC. FILTER FABRIC OVERHANG MUST BE COVERED WITH 1-1/4" CRUSHED ROCK.

4. FILTER FENCE MAY BE REQUIRED AROUND PERIMETER OF BASIN.

CITY OF KIRKLAND	
PLAN NO. CK-E.08	
CITY OF KIRKLAND WASHINGTON	CATCH BASIN/INLET SEDIMENTATION TRAP

LAST REVISED:04/15/12

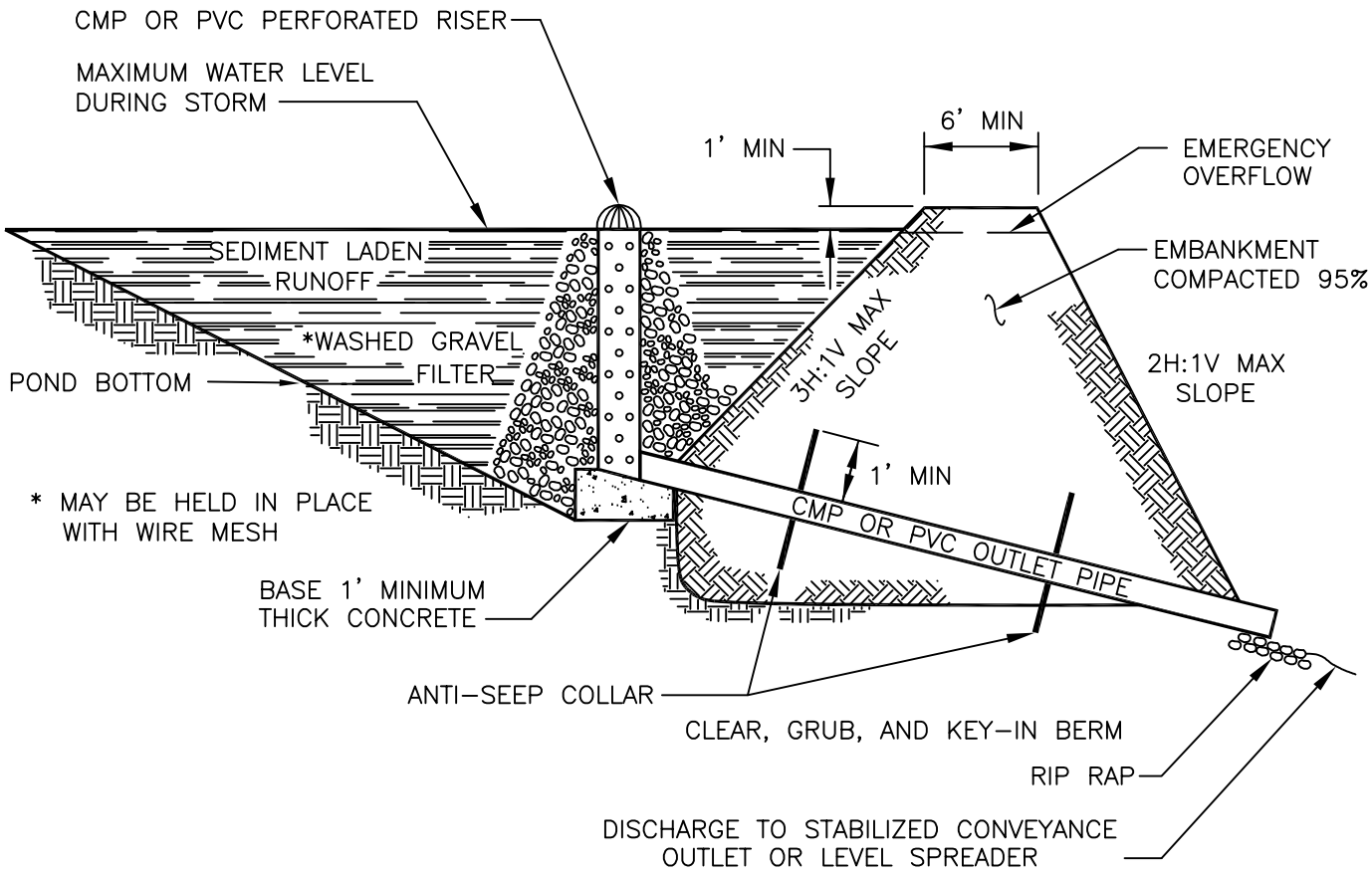

NOTES

1. VOLUME SHALL BE DETERMINED BY THE ECOLOGY STORMWATER MANAGEMENT MANUAL FOR W. WA OR KING COUNTY SURFACE WATER MANUAL.
2. REMOVE SEDIMENT FROM THE POND WHEN IT ACCUMULATES 1 FOOT DEPTH.
3. POND LENGTH SHALL BE 3 TIMES GREATER THAN THE WIDTH.

CITY OF KIRKLAND	
PLAN NO. CK-E.09	
CITY OF KIRKLAND WASHINGTON	TEMPORARY SEDIMENT POND

LAST REVISED:04/15/12

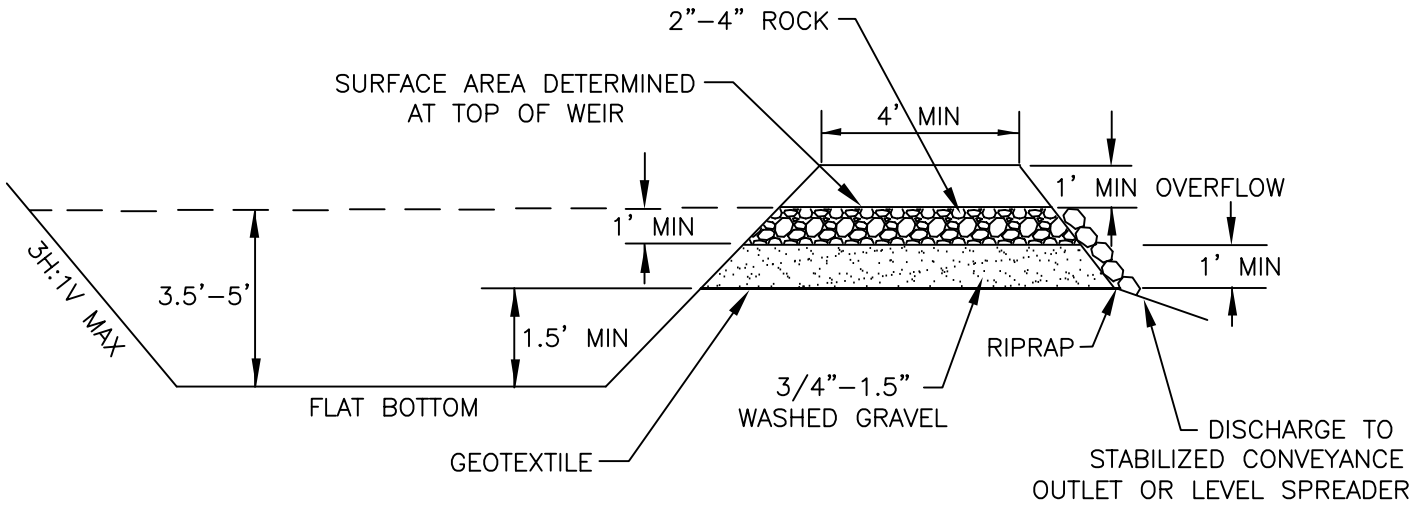

CROSS–SECTION

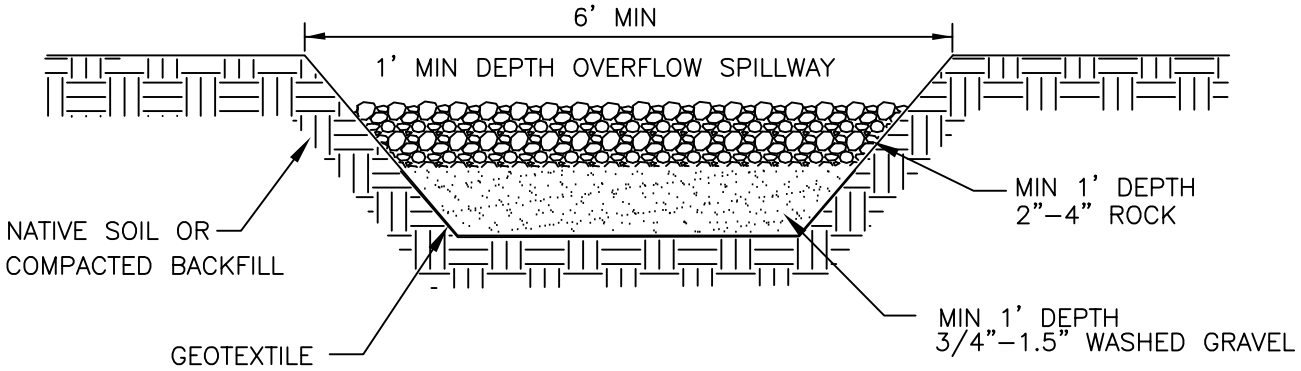

TRAP OUTLET

NOTES

1. VOLUME SHALL BE DETERMINED BY THE ECOLOGY STORMWATER MANAGEMENT MANUAL FOR W. WA OR KING COUNTY SURFACE WATER DESIGN MANUAL.

2. REMOVE SEDIMENT FROM THE TRAP WHEN IT ACCUMULATES 1 FOOT DEPTH.

CITY OF KIRKLAND	
PLAN NO. CK–E.09A	
CITY OF KIRKLAND WASHINGTON	TEMPORARY SEDIMENT TRAP

LAST REVISED: 02/28/14

SOIL AMENDMENT NOTES FOR BMP T5.13

REFERENCE: WA STATE DEPT. OF ECOLOGY'S STORMWATER MANAGEMENT MANUAL FOR W. WA

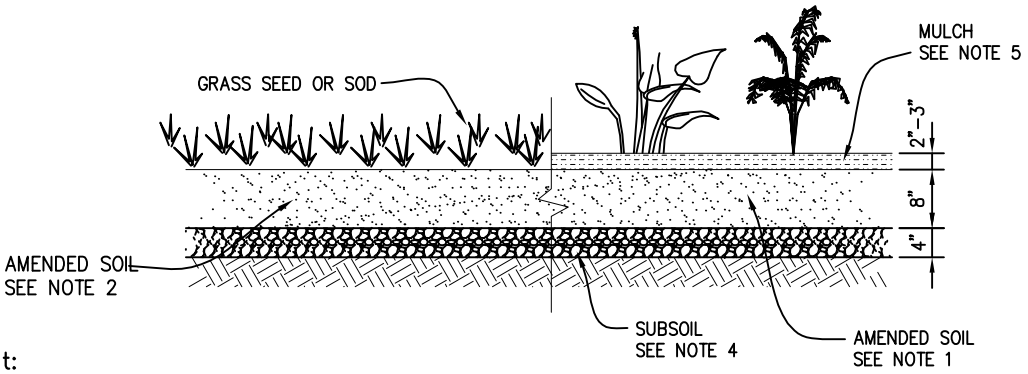

Notes for Soil Amendment:

General:

1. For planting areas, the minimum acceptable organic matter content by dry weight is 10% (loss–on–ignition testing).

2. For turf areas, the minimum acceptable organic matter content by dry weight is 5% (loss–on–ignition testing).

3. A minimum organic–amended depth of 8 inches (except in tree protection areas) is required.

4. Subsoil shall be scarified 4 inches below amended layer to produce 12–inch depth of un–compacted soil.

5. Planting beds should be mulched after planting with 2 to 3 inches of organic material such as arborist wood chip mulch.

6. Soil amendment cannot be placed in overly saturated soils. It is recommended that the soil amendment be placed between May 1 and October 1, when soils are typically driest and less subject to compaction.

7. Prior to soil installation, applicant will submit soil test verification, including tests from either supplier or contractor (depending on option chosen) to verify organic matter content and that compost meets WAC specifications. Soil verification test method must meet ASTM D2974. The verification shall clearly state the following (at a minimum): test date, test method used, testing company, and loss–on–ignition (LOI) results.

Soil Amendment Implementation Options

Option 1 – Imported Amended Soil:

1. For planting beds, a mix by volume of 40% compost (meeting WAC 173–350–220) with 60% mineral aggregate is pre–approved to meet the organic matter content by dry weight (loss–on–ignition test).

2. For turf areas, a mix by volume of 25% compost (meeting WAC 173–350–220) with 75% mineral aggregate is pre–approved to meet the organic matter content by dry weight (loss–on–ignition test).

Option 2 – Amending Existing Disturbed Topsoil:

1. For planting beds, 3 inches of compost (meeting WAC 173–350–220) incorporated into the top 8 inch depth is pre–approved to meet the organic matter content by dry weight (loss–on–ignition test).

2. For turf areas, 1.75 inches of compost (meeting WAC 173–350–220) incorporated into the top 8 inch depth is pre–approved to meet the organic matter content by dry weight (loss–on–ignition test).

Option 3 – Amending Stockpiled Topsoil from Cleared Areas:

1. Stockpile and cover soil with 3 inches of wood chips, weed barrier, or other breathable materials that sheds moisture yet allows air transmission.

2. Test stockpile material (prior to adding compost) for organic matter content to determine whether additional compost must be tilled into the stockpiled material to meet the required organic matter content by dry weight (loss–on–ignition test).

3. After the stockpiled material has been laid, a soil sample will be taken by applicant / contractor for every 5,000 sf or every lot (whichever is less) to test that the site meets the required organic matter content by dry weight (loss–on–ignition test).

CITY OF KIRKLAND	
PLAN NO. CK–E.12	
CITY OF KIRKLAND WASHINGTON	SOIL AMENDMENT

LAST REVISED:04/15/12

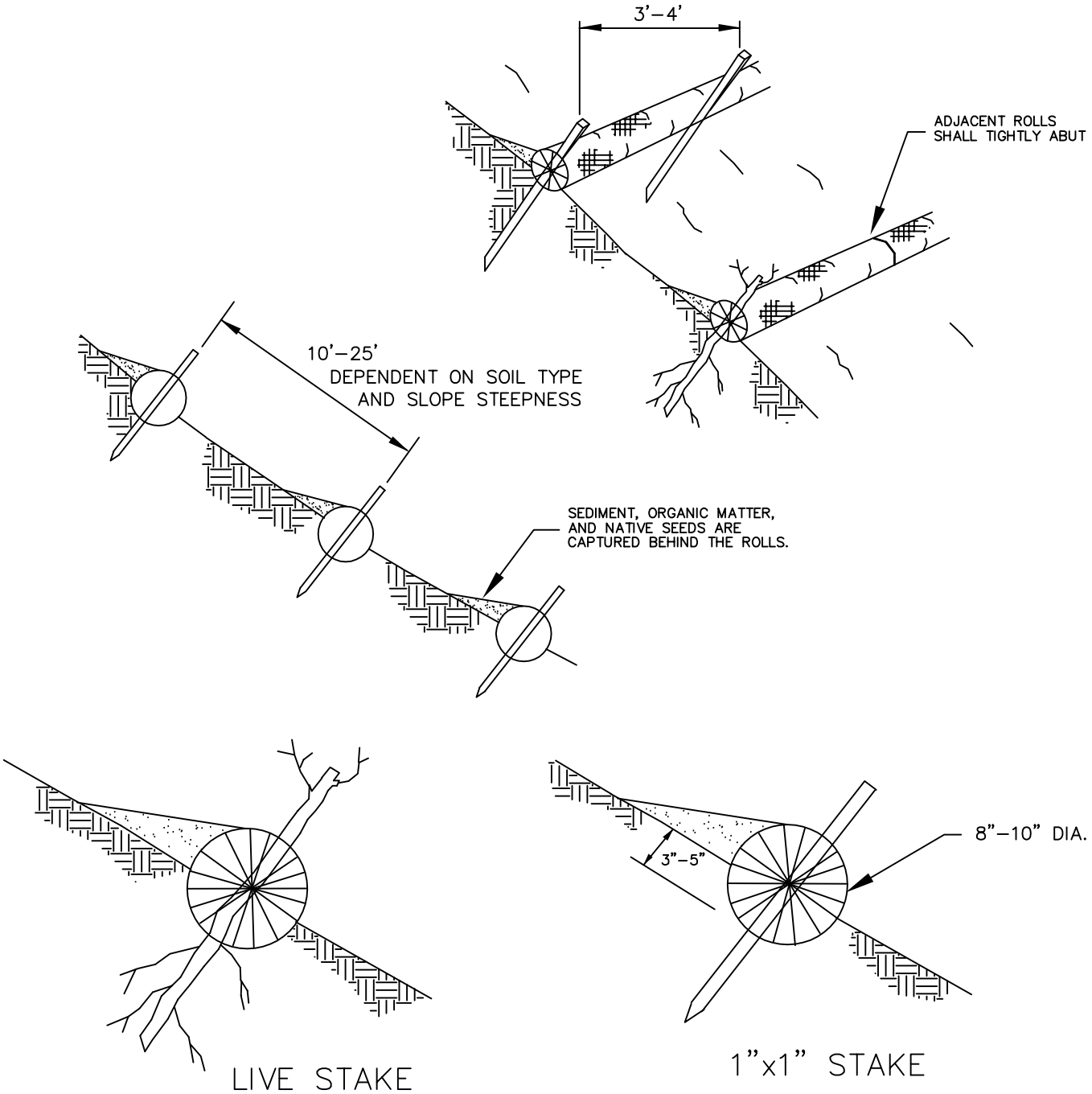

NOT TO SCALE

NOTES

1. STRAW ROLES SHALL BE PLACED ALONG SLOPE CONTOURS.

2. STRAW ROLL INSTALLATION REQUIRES THE PLACEMENT AND SECURE STAKING OF THE ROLL IN A TRENCH, 3"–5" DEEP, DUG ON CONTOUR. RUNOFF MUST NOT BE ALLOWED TO RUN UNDER OR AROUND ROLL.

3. DRIVE STAKE THROUGH MIDDLE OF WATTLE, LEAVING 2"–3" OF STAKE PORTRUDING ABOVE WATTLE.

CITY OF KIRKLAND	
PLAN NO. CK–E.10	
CITY OF KIRKLAND WASHINGTON	STRAW WATTLES

D.3.3.2 BRUSH BARRIER

Code: BB Symbol:

Purpose

The purpose of brush barriers is to reduce the transport of coarse sediment from a construction site by providing a temporary physical barrier to sediment and reducing the runoff velocities of overland flow.

Conditions of Use

1. Brush barriers may be used downslope of all disturbed areas.
2. Brush barriers are not intended to treat concentrated flows, nor are they intended to treat substantial amounts of overland flow. Any concentrated flows must be conveyed through the drainage system to a sediment trap or pond. The only circumstance in which overland flow may be treated solely by a barrier, rather than by a sediment trap or pond, is when the area draining to the barrier is small (see "Criteria for Use as Primary Treatment" on page D-30).

Design and Installation Specifications

1. See Figure D.3.3.C for details.
2. King County may require filter fabric (geotextile) anchored over the brush berm to enhance the filtration ability of the barrier.

Maintenance Standards

1. There shall be no signs of erosion or concentrated runoff under or around the barrier. If concentrated flows are bypassing the barrier, it must be expanded or augmented by toed-in filter fabric.
2. The dimensions of the barrier must be maintained.

FIGURE D.3.3.C BRUSH BARRIER

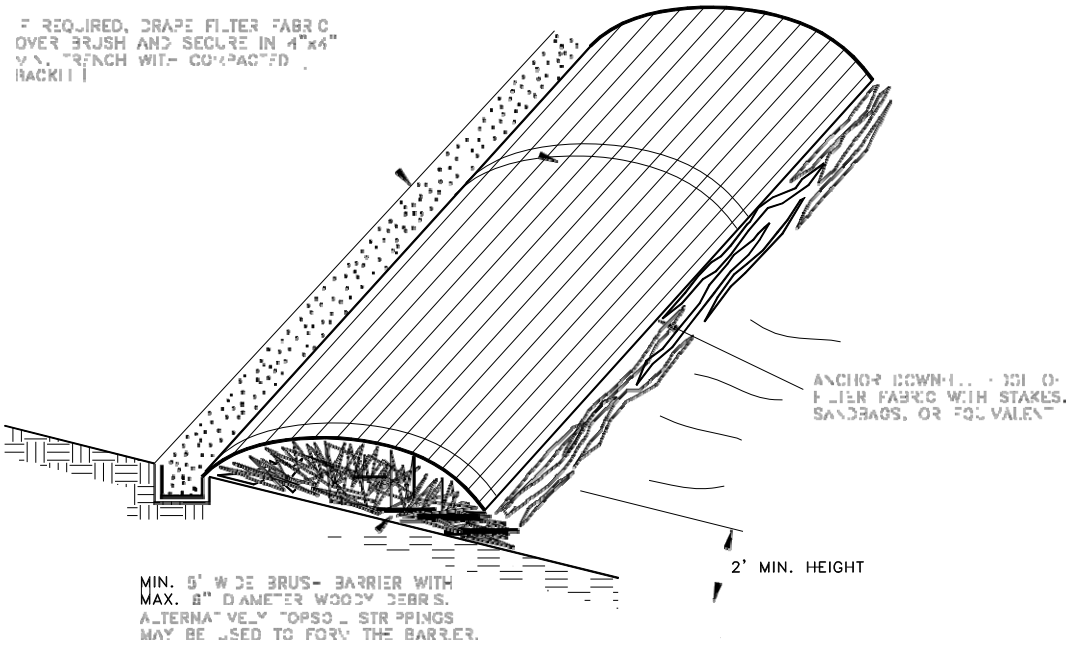

2. May be used on soil or pavement with adhesive or staples.
3. TSDs have been used to build temporary sediment ponds, diversion ditches, concrete washout facilities, curbing, water bars, level spreaders, and berms.

Design and Installation Specifications

1. TSDs must be made of urethane foam sewn into a woven geosynthetic fabric.
2. TSDs are triangular, 10 inches to 14 inches high in the center, with a 20-inch to 28-inch base. A 2-foot apron extends beyond both sides of the triangle along its standard section of 7 feet. A sleeve at one end allows attachment of additional sections as needed
3. Install TSDs with ends curved up to prevent water from flowing around the ends
4. Attach the TSDs and their fabric flaps to the ground with wire staples. Wire staples must be No. 11 gauge wire or stronger and shall be 200 mm to 300 mm in length.
5. When multiple units are installed, the sleeve of fabric at the end of the unit shall overlap the abutting unit and be stapled.
6. TSDs must be located and installed as soon as construction will allow.
7. TSDs must be placed perpendicular to the flow of water.
8. When used as check dams, the leading edge must be secured with rocks, sandbags, or a small key slot and staples.
9. When used in grass-lined ditches and swales, the TSD check dams and accumulated sediment shall be removed when the grass has matured sufficiently to protect the ditch or swale unless the slope of the swale is greater than 4 percent. The area beneath the TSD check dams shall be seeded and mulched immediately after dam removal.

Maintenance Standards

1. Triangular silt dikes shall be monitored for performance and sediment accumulation during and after each runoff producing rainfall event. Sediment shall be removed when it reaches one half the height of the silt dike.
2. Anticipate submergence and deposition above the triangular silt dike and erosion from high flows around the edges of the dike/dam. Immediately repair any damage or any undercutting of the dike/dam.

D.3.3.5 COMPOST BERMS

Code: COBE Symbol:

Purpose

Compost berms are an option to meet the requirements of perimeter protection. Compost berms may reduce the transport of sediment from a construction site by providing a temporary physical barrier to sediment and reducing the runoff velocities of overland flow. Compost berms trap sediment by filtering water passing through the berm and allowing water to pond, creating a settling area for solids behind the berm. Organic materials in the compost can also reduce concentrations of metals and petroleum hydrocarbons from construction runoff. Due to the increase in phosphorous seen in the effluent data from compost berms, they should be used with some cautions in areas that drain to phosphorus sensitive water bodies, and should only be used in Sensitive Lake watersheds, such as Lake Sammamish, with the approval from the County or the local jurisdiction.

Conditions of Use

1. Compost berms may be used in most areas requiring sediment or erosion control where runoff is in the form of sheet flow or in areas where silt fence is normally considered acceptable. Compost berms may be used in areas where migration of aquatic life such as turtles and salamanders are impeded by the use of silt fence.
2. Compost berms are not intended to treat concentrated flows, nor are they intended to treat substantial amounts of overland flow. Any concentrated flows must be conveyed via a drainage system to a sediment pond or trap.
3. For purposes of long-term sediment control objectives, berms may be seeded at the time of installation to create an additional vegetated filtering component.

Design and Installation Specifications

1. Compost berms shall be applied using a pneumatic blower device or equivalent, to produce a uniform cross-section and berm density.
2. Compost berms shall be triangular in cross-section. The ratio of base to height dimensions shall be 2:1.
3. The minimum size of a compost berm is a 2-foot base with a 1-foot height.
4. Compost berms shall be sized and spaced as indicated in the table below.

SLOPE	SLOPE	Maximum Slope Length or Berm Spacing (linear feet)	Berm Size Required (height x base width)
0% - 2%	Flatter than 50:1	250	1 ft x 2 ft
2% - 10%	50:1 – 10:1	125	1 ft x 2 ft
10% - 20%	10:1 – 5:1	100	1 ft x 2 ft
20% - 33%	5:1 – 3:1	75	1 ft x 2 ft
33% - 50%	3:1 – 2:1	50	1.5 ft x 3 ft

5. Compost berms shall not be used on slopes greater than 2H:1V
6. Compost shall meet criteria in WAC 173-350-220 (10) for Designation of Composted Materials
7. Compost shall be obtained from a supplier meeting the requirements of WAC 173-350-220.
8. Compost particle size distribution shall be as follows: 99% passing a 1 inch sieve, 90% passing a ¾ inch sieve and a minimum of 70% greater than the 3/8 inch sieve. A total of 98% shall not exceed 3 inches in length.
9. Berms shall be placed on level contours to assist in dissipating flow into sheet flow rather than concentrated flows. Berms shall not be constructed to concentrate runoff or channel water. Sheet flow of water shall be perpendicular to the berm at impact. No concentrated flow shall be directed towards compost berms.
10. Where possible, berms shall be placed 5 feet or more from the toe of slopes to allow space for sediment deposition and collection.
11. In order to prevent water from flowing around the ends of the berms, the ends of the berm shall be constructed pointing upslope so the ends are at a higher elevation than the rest of the berm.
12. A compost blanket extending 10 – 15 feet above the berm is recommended where the surface above the berm is rutted or uneven, to reduce concentrated flow and promote sheet flow into the berm.

Maintenance Standards

1. Compost berms shall be regularly inspected to make sure they retain their shape and allow adequate flow-through of stormwater.
2. When construction is completed on site, the berms shall be dispersed for incorporation into the soil or left on top of the site for final seeding to occur.
3. Any damage to berms must be repaired immediately. Damage includes flattening, compacting, rills, eroded areas due to overtopping.
4. If concentrated flows are evident uphill of the berm, the flows must be intercepted and conveyed to a sediment trap or pond.
5. The uphill side of the berm shall be inspected for signs of the berm clogging and acting as a barrier to flows and causing channelization of flows parallel to the berm. If this occurs, replace the berm or remove the trapped sediment.
6. Sediment that collects behind the berm must be removed when the sediment is more than 6 inches deep.

D.3.3.6 COMPOST SOCKS

Code: COSO Symbol:

Purpose

Compost socks reduce the transport of sediment from a construction site by providing a temporary physical barrier to sediment-laden water and reducing the runoff velocities of overland flow. Compost socks trap sediment by filtering water that passes through the sock and allows water to pond behind the sock, creating a settling area for solids. Organic materials in the compost also may reduce metal and petroleum hydrocarbon concentrations in construction runoff. Compost socks function similarly to compost berms; however, because the compost is contained in a mesh tube, they are appropriate for both concentrated flow and sheet flow. Compost socks may be used to channel concentrated flow on hard surfaces.

Conditions of Use

1. Compost socks may be used in areas requiring sediment or erosion control where runoff is in the form of sheet flow or in areas that silt fence is normally considered acceptable. Compost socks may also be used in sensitive environmental areas where migration of aquatic life, including turtles, salamanders and other aquatic life may be impeded by the used of silt fence.
2. Compost socks are not intended to treat substantial amounts of overland flow. However, compost socks may be subjected to some ponding and concentrated flows. If intended primarily as a filtration device, the socks should be sized and placed so that flows do not overtop the socks.
3. For purposes of long term sediment control objectives, compost socks may be seeded at the time of installation to create an additional vegetated filtering component.

Design and Installation Specifications

1. Compost socks shall be produced using a pneumatic blower hose or equivalent to fill a mesh tube with compost to create a uniform cross-section and berm density.
2. Socks shall be filled so they are firmly – packed yet flexible. Upon initial filling, the socks shall be filled to have a round cross-section. Once placed on the ground, it is recommended to apply weight to

4. Add PAM/Water mixture to the truck.
5. Completely fill the water truck to specified volume.
6. Spray PAM/Water mixture onto dry soil until the soil surface is uniformly and completely wetted.

Alternate Application Method

PAM may also be applied as a powder at the rate of 5 pounds per acre. This must be applied on a day that is dry. For areas less than 5-10 acres, a hand-held "organ grinder" fertilized spreader set to the smallest setting will work. Tractor mounted spreaders will work for larger areas.

Maintenance Standards

1. PAM may be reapplied on actively worked areas after a 48-hour period
2. Reapplication is not required unless PAM treated soil is disturbed or unless turbidity levels show the need for an additional application. If PAM treated soil is left undisturbed, a reapplication may be necessary after two months. More PAM applications may be required for steep slopes, silty and clay soils, (USDA classification Type "C" and "D" soils), long grades, and high precipitation areas. When PAM is applied first to bare soil and then covered with straw, a reapplication may not be necessary for several months.

D.3.2.9 COMPOST BLANKETS

Code: COBL Symbol:

Purpose

Compost blankets are intended to:

- Provide immediate temporary protection from erosion by protecting soil from rainfall and slowing flow velocity over the soil surface.
- Enhance temporary or permanent plant establishment by conserving moisture, holding seed and topsoil in place, providing nutrients and soil microorganisms, and moderating soil temperatures.
- Compost blankets, applied at the proper thickness and tilled into the soil, are also an option for amending soils for permanent landscaping.
- Compost generally releases and adds phosphorous to stormwater. Therefore, compost blankets are not recommended for use in watersheds where phosphorous sensitive water resources are located. Unless prior approval is given by the County, they should not be used in Sensitive Lake Watersheds.

Conditions of Use

1. Compost blankets may be used unseeded on disturbed areas that require temporary cover measures up to 1 year. Compost applied as temporary cover may be reclaimed and re-used for permanent cover.
2. Compost provides cover for protecting final grades until landscaping can be completed as it can be directly seeded or tilled into soil as an amendment.
3. Compost blankets meet mulch requirements for seed.
4. Seed may be applied to a compost blanket at any time for permanent or temporary stabilization of disturbed areas. Seed may be applied prior to blanket application, on top of blankets, or injected and mixed into the compost as it is applied.
5. Compost blankets may be applied on slopes up to 2H:1V.

Design and Installation Specifications

1. Compost shall be applied at a minimum of 2 inches thick, unless otherwise directed by an ESC supervisor or King County. At an application of 2 inches, this will equal approximately 100 tons per acre (compost generally weighs approximately 800 lbs per cubic yard). Thickness shall be increased at the direction of the design engineer for disturbed areas in or near critical areas or other areas highly susceptible to erosion.
2. Compost shall meet criteria in WAC 173-350-220 (10) for Designation of Composted Materials.
3. Compost shall be obtained from a supplier meeting the requirements of WAC 173-350-220.
4. Compost blankets shall be applied over the top of the slope to which it is applied, to prevent water from running under the blanket
5. Compost blankets shall not be used in areas exposed to concentrated flow (e.g. channels, ditches, dikes)

Maintenance Standards

1. The specified thickness of the blanket/cover must be maintained.
2. Any areas that show signs of erosion must be re-mulched. If the erosion problem is drainage related, then the drainage problem must first be remedied and then the eroded area re-mulched.

Maintenance Standards

1. Compost berms shall be regularly inspected to make sure they retain their shape and allow adequate flow-through of stormwater.
2. When construction is completed on site, the berms shall be dispersed for incorporation into the soil or left on top of the site for final seeding to occur.
3. Any damage to berms must be repaired immediately. Damage includes flattening, compacting, rills, eroded areas due to overtopping.
4. If concentrated flows are evident uphill of the berm, the flows must be intercepted and conveyed to a sediment trap or pond.
5. The uphill side of the berm shall be inspected for signs of the berm clogging and acting as a barrier to flows and causing channelization of flows parallel to the berm. If this occurs, replace the berm or remove the trapped sediment.
6. Sediment that collects behind the berm must be removed when the sediment is more than 6 inches deep.

D.3.3.6 COMPOST SOCKS

Code: COSO Symbol:

Purpose

Compost socks reduce the transport of sediment from a construction site by providing a temporary physical barrier to sediment-laden water and reducing the runoff velocities of overland flow. Compost socks trap sediment by filtering water that passes through the sock and allows water to pond behind the sock, creating a settling area for solids. Organic materials in the compost also may reduce metal and petroleum hydrocarbon concentrations in construction runoff. Compost socks function similarly to compost berms; however, because the compost is contained in a mesh tube, they are appropriate for both concentrated flow and sheet flow. Compost socks may be used to channel concentrated flow on hard surfaces.

Conditions of Use

1. Compost socks may be used in areas requiring sediment or erosion control where runoff is in the form of sheet flow or in areas that silt fence is normally considered acceptable. Compost socks may also be used in sensitive environmental areas where migration of aquatic life, including turtles, salamanders and other aquatic life may be impeded by the used of silt fence.
2. Compost socks are not intended to treat substantial amounts of overland flow. However, compost socks may be subjected to some ponding and concentrated flows. If intended primarily as a filtration device, the socks should be sized and placed so that flows do not overtop the socks.
3. For purposes of long term sediment control objectives, compost socks may be seeded at the time of installation to create an additional vegetated filtering component.

Design and Installation Specifications

1. Compost socks shall be produced using a pneumatic blower hose or equivalent to fill a mesh tube with compost to create a uniform cross-section and berm density.
2. Socks shall be filled so they are firmly – packed yet flexible. Upon initial filling, the socks shall be filled to have a round cross-section. Once placed on the ground, it is recommended to apply weight to

the sock to improve contact with the underlying surface. This may cause the sock to assume an oval shape.

3. Compost socks shall be a minimum of 8 inches in diameter. Larger diameter socks are recommended for areas where ponding is expected behind the sock.
4. Compost socks shall not be used on slopes greater than 2H:1V.
5. Compost shall meet criteria in WAC 173-350-220 (10) for Designation of Composted Materials.
6. Compost shall be obtained from a supplier meeting the requirements of WAC 173-350-220.
7. Compost particle size distribution shall be as follows: 99% passing a 1 inch sieve, 90% passing a ¾ inch sieve and a minimum of 70% greater than the 3/8 inch sieve. A total of 98% shall not exceed 3 inches in length.
8. In order to prevent water from flowing around the ends of compost socks, the ends must be pointed upslope so the ends of the socks are at a higher elevation than the remainder of the sock.

Maintenance Standards

1. Compost socks shall be regularly inspected to make sure the mesh tube remains undamaged, the socks retain their shape, and allow adequate flow through of surface water. If the mesh tube is torn, it shall be repaired using twine, zip-ties, or wire. Large sections of damaged socks must be replaced. Any damage must be repaired immediately upon discovery of damage.
2. When the sock is no longer needed, the socks shall be cut open and the compost dispersed to be incorporated into the soil or left on top of the soil for final seeding to occur. The mesh material must be disposed of properly as solid waste. If spills of oil, antifreeze, hydraulic fluid, or other equipment fluids have occurred that have saturated the sock, the compost must be disposed of properly as a waste.
3. Sediment must be removed when sediment accumulations are within 3 inches of the top of the sock.

D.3.4 TRAFFIC AREA STABILIZATION

Unsurfaced entrances, roads, and parking areas used by construction traffic shall be stabilized to minimize erosion and tracking of sediment off site. Stabilized construction entrances shall be installed as the first step in clearing and grading. At the County's discretion, road and parking area stabilization is not required during the dry season (unless dust is a concern) or if the site is underlain by coarse-grained soils. Roads and parking areas shall be stabilized immediately after initial grading.

Purpose: The purpose of traffic area stabilization is to reduce the amount of sediment transported off site by construction vehicles and to reduce the erosion of areas disturbed by vehicle traffic. Sediment transported off site onto paved streets is a significant problem because it is difficult to effectively remove, and any sediment not removed ends up in the drainage system. Additionally, sediment on public right-of-way can pose a serious traffic hazard. Construction road and parking area stabilization is important because the combination of wet soil and heavy equipment traffic typically forms a slurry of easily erodible mud. Finally, stabilization also is an excellent form of dust control in the summer months.

When to Install: The construction entrance is to be installed as the first step in clearing and grading. Construction road stabilization shall occur immediately after initial grading of the construction roads and parking areas.

Measures to Use: There are two types of traffic area stabilization: (1) a stabilized construction entrance and (2) construction road/parking area stabilization. Both measures must be used as specified under "Conditions of Use" for each measure.

D.3.2.8 POLYACRYLAMIDE FOR SOIL EROSION PROTECTION

Purpose

Polyacrylamide (PAM) is used on construction sites to prevent soil erosion. Applying PAM to bare soil in advance of a rain event significantly reduces erosion and controls sediment in two ways. First, PAM increases the soil's available pore volume, thus increasing infiltration through flocculation and reducing the quantity of stormwater runoff. Second, it increases flocculation of suspended particles and aids in their deposition, thus reducing stormwater runoff turbidity and improving water quality.

Conditions of Use

1. PAM shall not be directly applied to water or allowed to enter a water body.
2. PAM may be applied to wet soil, but dry soil is preferred due to less sediment loss.
3. PAM will work when applied to saturated soil but is not as effective as applications to dry or damp soil.
4. PAM may be applied only to the following types of bare soil areas that drain to a sediment trap or a sediment pond:
   - Staging areas
   - Stockpiles
   - Pit sites
   - Balanced cut and fill earthwork
   - Haul roads prior to placement of crushed rock surfacing
   - Compacted soil road base
5. PAM may be applied only during the following phases of construction:
   - During rough grading operations
   - After final grade and before paving or final seeding and planting
   - During a winter shut down of site work. In the case of winter shut down, or where soil will remain unworked for several months, PAM should be used together with mulch.
6. Do not use PAM on a slope that flows directly to a stream or wetland. The stormwater runoff shall pass through a sediment control measure prior to discharging to surface waters.

Design and Installation Specifications

1. PAM must be applied using one of two methods of application, "preferred" or "alternative." The specifications for these methods are described under separate headings below.
2. PAM may be applied in dissolved form with water, or it may be applied in dry, granular or powdered form. The preferred application method is the dissolved form.
3. PAM is to be applied at a maximum rate of ½ pound PAM per 1000 gallons of water per 1 acre of bare soil. Table D.3.2.H may be used to determine the PAM and water application rate for disturbed soil areas. Higher concentrations of PAM **do not** provide any additional effectiveness.
4. Do not add PAM to water discharging from the site.
5. PAM shall be used in conjunction with other ESC measures and not in place of them. When the total drainage area is greater than or equal to 3 acres, PAM treated areas shall drain to a sediment pond per Section D.3.5.2. For drainage areas less than 3 acres, PAM treated areas must drain to a sediment trap per Section D.3.5.1. Other normally required sediment control measures such as perimeter protection

measures (Section D.3.3) and surface water collection measures (Section D.3.6) shall be applied to PAM treated areas.

6. All areas not being actively worked shall be covered and protected from rainfall. PAM shall not be the only cover BMP used.
7. Keep the granular PAM supply out of the sun. Granular PAM loses its effectiveness in three months after exposure to sunlight and air.
8. Care must be taken to prevent spills of PAM powder onto paved surfaces. PAM, combined with water, is very slippery and can be a safety hazard. During an application of PAM, prevent over-spray from reaching pavement as the pavement will become slippery. If PAM powder gets on skin or clothing, wipe it off with a rough towel rather than washing with water. Washing with water only makes cleanup more difficult, messier, and time consuming.
9. The specific PAM copolymer formulation must be anionic. Cationic PAM shall not be used in any application because of known aquatic toxicity concerns. Only the highest drinking water grade PAM, certified for compliance with ANSI/NSF Standard 60 for drinking water treatment, may be used for soil applications. The Washington State Department of Transportation (WSDOT) lists approved PAM products on their web page. All PAM use shall be reviewed and approved by DDES.
10. The PAM anionic charge density may vary from 2 – 30 percent; a value of 18 percent is typical. Studies conducted by the United States department of Agriculture (USDA)/ARS demonstrated that soil stabilization was optimized by using very high molecular weight (12 – 15 mg/mole), highly anionic (>20% hydrolysis) PAM.
11. PAM must be "water soluble" or "linear" or "non-cross-linked." Cross-linked or water absorbent PAM, polymerized in highly acidic (pH<2) conditions, are used to maintain soil moisture content.

TABLE D.3.2.H PAM AND WATER APPLICATION RATES

Disturbed Area (ac)	PAM (lbs)	Water (gal)
0.50	0.25	500
1.00	0.50	1,000
1.50	0.75	1,500
2.00	1.00	2,000
2.50	1.25	2,500
3.00	1.50	3,000
3.50	1.75	3,500
4.00	2.00	4,000
4.50	2.25	4,500
5.00	2.50	5,000

Preferred Application Method

1. Pre-measure the area where PAM is to be applied and calculate the amount of product and water necessary to provide coverage at the specified application rate (1/2 pound PAM/1,000 gallons/acre).
2. Dissolve pre-measured dry granular PAM with a known quantity of clean water in a bucket several hours or overnight. PAM has infinite solubility in water, but dissolves very slowly. Mechanical mixing will help dissolve PAM. Always add PAM to water – not water to PAM.
3. Pre-fill the water truck about 1/8 full with water. The water does not have to be potable, but it must have relatively low turbidity – in the range of 20 NTU or less.

4. Add PAM/Water mixture to the truck.
5. Completely fill the water truck to specified volume.
6. Spray PAM/Water mixture onto dry soil until the soil surface is uniformly and completely wetted.

Alternate Application Method

PAM may also be applied as a powder at the rate of 5 pounds per acre. This must be applied on a day that is dry. For areas less than 5-10 acres, a hand-held "organ grinder" fertilized spreader set to the smallest setting will work. Tractor mounted spreaders will work for larger areas.

Maintenance Standards

1. PAM may be reapplied on actively worked areas after a 48-hour period
2. Reapplication is not required unless PAM treated soil is disturbed or unless turbidity levels show the need for an additional application. If PAM treated soil is left undisturbed, a reapplication may be necessary after two months. More PAM applications may be required for steep slopes, silty and clay soils, (USDA classification Type "C" and "D" soils), long grades, and high precipitation areas. When PAM is applied first to bare soil and then covered with straw, a reapplication may not be necessary for several months.

D.3.2.9 COMPOST BLANKETS

Code: COBL Symbol:

Purpose

Compost blankets are intended to:

- Provide immediate temporary protection from erosion by protecting soil from rainfall and slowing flow velocity over the soil surface.
- Enhance temporary or permanent plant establishment by conserving moisture, holding seed and topsoil in place, providing nutrients and soil microorganisms, and moderating soil temperatures.
- Compost blankets, applied at the proper thickness and tilled into the soil, are also an option for amending soils for permanent landscaping.
- Compost generally releases and adds phosphorous to stormwater. Therefore, compost blankets are not recommended for use in watersheds where phosphorous sensitive water resources are located. Unless prior approval is given by the County, they should not be used in Sensitive Lake Watersheds.

Conditions of Use

1. Compost blankets may be used unseeded on disturbed areas that require temporary cover measures up to 1 year. Compost applied as temporary cover may be reclaimed and re-used for permanent cover.
2. Compost provides cover for protecting final grades until landscaping can be completed as it can be directly seeded or tilled into soil as an amendment.
3. Compost blankets meet mulch requirements for seed.
4. Seed may be applied to a compost blanket at any time for permanent or temporary stabilization of disturbed areas. Seed may be applied prior to blanket application, on top of blankets, or injected and mixed into the compost as it is applied.
5. Compost blankets may be applied on slopes up to 2H:1V.

D.3.3.3 VEGETATED STRIP

Code: VS Symbol: 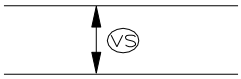

Purpose

Vegetated strips reduce the transport of coarse sediment from a construction site by providing a temporary physical barrier to sediment and reducing the runoff velocities of overland flow.

Conditions of Use

1. Vegetated strips may be used downslope of all disturbed areas.
2. Vegetated strips are not intended to treat concentrated flows, nor are they intended to treat substantial amounts of overland flow. Any concentrated flows must be conveyed through the drainage system to a sediment trap or pond. The only circumstance in which overland flow may be treated solely by a strip, rather than by a sediment trap or pond, is when the area draining to the strip is small (see "Criteria for Use as Primary Treatment" on page D-30).

Design and Installation Specifications

1. The vegetated strip shall consist of a 25-foot minimum width continuous strip of dense vegetation with a permeable topsoil. Grass-covered, landscaped areas are generally not adequate because the volume of sediment overwhelms the grass. Ideally, vegetated strips shall consist of undisturbed native growth with a well-developed soil that allows for infiltration of runoff.
2. The slope within the strip shall not exceed 4H:1V.
3. The uphill boundary of the vegetated strip shall be delineated with clearing limits as specified in Section D.3.1 (p. D-8).

Maintenance Standards

1. Any areas damaged by erosion or construction activity shall be seeded immediately and protected by mulch.
2. If more than 5 feet of the original vegetated strip width has had vegetation removed or is being eroded, sod must be installed using the standards for installation found in Section D.4.2.5.

If there are indications that concentrated flows are traveling across the buffer, surface water controls must be installed to reduce the flows entering the buffer, or additional perimeter protection must be installed.

D.3.3.4 TRIANGULAR SILT DIKE (GEOTEXTILE ENCASED CHECK DAM)

Code: TSD Symbol:

Purpose

Triangular silt dikes (TSDs) may be used as check dams, for perimeter protection, for temporary soil stockpile protection, for drop inlet protection, or as a temporary interceptor dike. Silt dikes, if attached to impervious surfaces with tack or other adhesive agent may also be used as temporary wheel wash areas, or concrete washout collection areas.

Conditions of Use

1. May be used for temporary check dams in ditches.

2. May be used on soil or pavement with adhesive or staples.
3. TSDs have been used to build temporary sediment ponds, diversion ditches, concrete washout facilities, curbing, water bars, level spreaders, and berms.

Design and Installation Specifications

1. TSDs must be made of urethane foam sewn into a woven geosynthetic fabric.
2. TSDs are triangular, 10 inches to 14 inches high in the center, with a 20-inch to 28-inch base. A 2-foot apron extends beyond both sides of the triangle along its standard section of 7 feet. A sleeve at one end allows attachment of additional sections as needed
3. Install TSDs with ends curved up to prevent water from flowing around the ends
4. Attach the TSDs and their fabric flaps to the ground with wire staples. Wire staples must be No. 11 gauge wire or stronger and shall be 200 mm to 300 mm in length.
5. When multiple units are installed, the sleeve of fabric at the end of the unit shall overlap the abutting unit and be stapled.
6. TSDs must be located and installed as soon as construction will allow.
7. TSDs must be placed perpendicular to the flow of water.
8. When used as check dams, the leading edge must be secured with rocks, sandbags, or a small key slot and staples.
9. When used in grass-lined ditches and swales, the TSD check dams and accumulated sediment shall be removed when the grass has matured sufficiently to protect the ditch or swale unless the slope of the swale is greater than 4 percent. The area beneath the TSD check dams shall be seeded and mulched immediately after dam removal.

Maintenance Standards

1. Triangular silt dikes shall be monitored for performance and sediment accumulation during and after each runoff producing rainfall event. Sediment shall be removed when it reaches one half the height of the silt dike.
2. Anticipate submergence and deposition above the triangular silt dike and erosion from high flows around the edges of the dike/dam. Immediately repair any damage or any undercutting of the dike/dam.

D.3.3.5 COMPOST BERMS

Code: COBE Symbol:

Purpose

Compost berms are an option to meet the requirements of perimeter protection. Compost berms may reduce the transport of sediment from a construction site by providing a temporary physical barrier to sediment and reducing the runoff velocities of overland flow. Compost berms trap sediment by filtering water passing through the berm and allowing water to pond, creating a settling area for solids behind the berm. Organic materials in the compost can also reduce concentrations of metals and petroleum hydrocarbons from construction runoff. Due to the increase in phosphorous seen in the effluent data from compost berms, they should be used with some cautions in areas that drain to phosphorus sensitive water bodies, and should only be used in Sensitive Lake watersheds, such as Lake Sammamish, with the approval from the County or the local jurisdiction.

2. After adequate cover is achieved, any areas that experience erosion shall be re-seeded and protected by mulch. If the erosion problem is drainage related, the problem shall be fixed and the eroded area re-seeded and protected by mulch.
3. Seeded areas shall be supplied with adequate moisture, but not watered to the extent that it causes runoff.

D.3.2.7 SODDING

Code: SO Symbol:

Purpose

The purpose of sodding is to establish permanent turf for immediate erosion protection and to stabilize drainage ways where concentrated overland flow will occur.

Conditions of Use

Sodding may be used in the following areas:

1. Disturbed areas that require short-term or long-term cover
2. Disturbed areas that require immediate vegetative cover
3. All waterways that require vegetative lining (except biofiltration swales—the seed mix used in most sod is not appropriate for biofiltration swales). Waterways may also be seeded rather than sodded, and protected with a net or blanket (see Section D.3.2.3).

Design and Installation Specifications

Sod shall be free of weeds, of uniform thickness (approximately 1-inch thick), and shall have a dense root mat for mechanical strength.

The following steps are recommended for sod installation:

1. Shape and smooth the surface to final grade in accordance with the approved grading plan.
2. Amend two inches (minimum) of well-rotted compost into the top six inches of the soil if the organic content of the soil is less than ten percent. Compost used should meet Ecology publication 98-38 specifications for Grade A quality compost.
3. Fertilize according to the supplier's recommendations. Disturbed areas within 200 feet of water bodies and wetlands must use non-phosphorus fertilizer.
4. Work lime and fertilizer 1 to 2 inches into the soil, and smooth the surface.
5. Lay strips of sod beginning at the lowest area to be sodded and perpendicular to the direction of water flow. Wedge strips securely into place. Square the ends of each strip to provide for a close, tight fit. Stagger joints at least 12 inches. Staple on slopes steeper than 3H:1V.
6. Roll the sodded area and irrigate.
7. When sodding is carried out in alternating strips or other patterns, seed the areas between the sod immediately after sodding.

Maintenance Standards

If the grass is unhealthy, the cause shall be determined and appropriate action taken to reestablish a healthy groundcover. If it is impossible to establish a healthy groundcover due to frequent saturation, instability, or some other cause, the sod shall be removed, the area seeded with an appropriate mix, and protected with a net or blanket.

Design and Installation Specifications

1. The fence shall be designed and installed according to the manufacturer's specifications.
2. The fence shall be at least 3 feet high and must be highly visible.
3. The fence shall not be wired or stapled to trees.

Maintenance Requirements

1. If the fence has been damaged or visibility reduced, it shall be repaired or replaced immediately and visibility restored.
2. Disturbance of a critical area, critical area buffer, native growth retention area, or any other area required to be left undisturbed shall be reported to the County for resolution.

D.3.1.2 STAKE AND WIRE FENCE

Code: SWF Symbol:

Purpose

Fencing is intended to (1) restrict clearing to approved limits; (2) prevent disturbance of critical areas, their buffers, and other areas required to be left undisturbed; (3) limit construction traffic to designated construction entrances or roads; and (4) protect any areas where marking with survey tape may not provide adequate protection.

Conditions of Use

To establish clearing limits, stake or wire fence may be used:

1. At the boundary of critical areas, their buffers, and other areas required to be left uncleared.
2. As necessary, to control vehicle access to and on the site (see Sections D.3.4.1 and D.3.4.2).

Design and Installation Specifications

See Figure D.3.1.A for details.

Maintenance Requirements

1. If the fence has been damaged or visibility reduced, it shall be repaired or replaced immediately and visibility restored.
2. Disturbance of a critical area, critical area buffer, native growth retention area, or other area required to be left undisturbed shall be reported to the County for resolution.
3. The County may require more substantial fencing if the fence does not prevent encroachment into those areas that are not to be disturbed.

FIGURE D.3.1.A STAKE AND WIRE FENCE

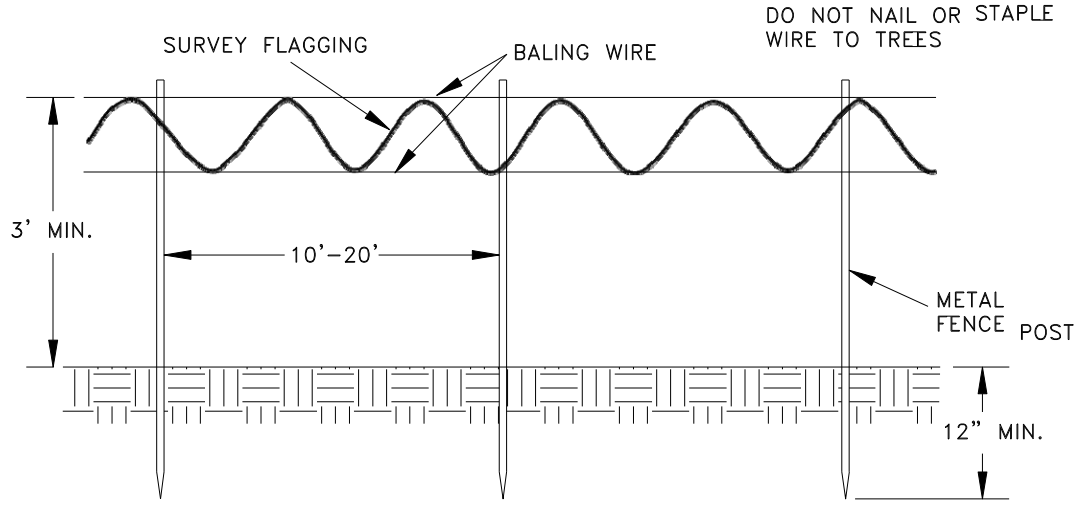

D.3.2 COVER MEASURES

Temporary and permanent cover measures shall be provided to protect all disturbed areas, including the faces of cut and fill slopes. Temporary cover shall be installed if an area is to remain unworked for more than seven days during the dry season (May 1 to September 30) or for more than two consecutive working days during the wet season (October 1 to April 30). These time limits may be relaxed if an area poses a low risk of erosion due to soil type, slope gradient, anticipated weather conditions, or other factors. Conversely, the County may reduce these time limits if site conditions warrant greater protection (e.g., adjacent to significant aquatic resources or highly erosive soils) or if significant precipitation (see Section D.5.2) is expected. Any area to remain unworked for more than 30 days shall be seeded or sodded, unless the County determines that winter weather makes vegetation establishment infeasible. During the wet season, slopes and stockpiles at 3H:1V or steeper and with more than ten feet of vertical relief shall be covered if they are to remain unworked for more than 12 hours. Also during the wet season, the material necessary to cover all disturbed areas must be stockpiled on site. The intent of these cover requirements is to have as much area as possible covered during any period of precipitation.

Purpose: The purpose of covering exposed soils is to prevent erosion, thus reducing reliance on less effective methods that remove sediment after it is entrained in runoff. Cover is the only practical method of reducing turbidity in runoff. Structural measures, such as silt fences and sediment ponds, are only capable of removing coarse particles and in most circumstances have little to no effect on turbidity.

When to Install: Any exposed soils that will remain unworked for more than the time limit set above shall be covered by the end of the working day. If the exposed area is to remain unworked for more than 30 days, the area shall be seeded with the temporary seed mix or an equivalent mix that will provide rapid protection (see Section D.3.2.5). If the disturbed area is to remain unworked for a year or more or if the area has reached final grade, permanent seed mix or an equivalent mix shall be applied.

Measures to Use: Cover methods include the use of surface roughening, mulch, erosion control nets and blankets, plastic covering, seeding, and sodding. Mulch and plastic sheeting are primarily intended to protect disturbed areas for a short period of time, typically days to a few months. Seeding and sodding are measures for areas that are to remain unworked for months. Erosion nets and blankets are to be used in conjunction with seeding steep slopes. The choice of measures is left to the designer; however, there are restrictions on the use of these methods, which are listed in the "Conditions of Use" and the "Design and Installation Specifications" sections for each measure.

The methods listed are by no means exhaustive. Variations on the standards presented here are encouraged if other cost-effective products or methods provide substantially equivalent or superior performance. Also, the details of installation can, and should, vary with the site conditions. A useful reference on the application of cover measures in the Puget Sound area is Horner, Guedrey, and Kortenhof (1990).

D.3.2.1 SURFACE ROUGHENING

Purpose

The purpose of surface roughening is to aid in the establishment of vegetative cover and to reduce runoff velocity, increase infiltration, and provide for sediment trapping through the provision of a rough soil surface. The rough soil surface may be created by operating a tiller or other equipment on the contour to form horizontal depressions or by leaving slopes in a roughened condition by not fine grading.

Conditions of Use

1. All slopes steeper than 3:1 and greater than 5 vertical feet require surface roughening.
2. Areas with grades steeper than 3:1 should be roughened to a depth of 2 to 4 inches prior to seeding.
3. Areas that will not be stabilized immediately may be roughened to reduce runoff velocity until seeding takes place.
4. Slopes with a stable rock face do not require roughening.
5. Slopes where mowing is planned should not be excessively roughened.

Design and Installation Specifications

There are different methods for achieving a roughened soil surface on a slope, and the selection of an appropriate method depends upon the type of slope. Roughening methods include stair-step grading, grooving, contour furrows, and tracking. See Figure D.3.2.A for information on tracking and contour furrows. Factors to be considered in choosing a method are slope steepness, mowing requirements, and whether the slope is formed by cutting or filling. Sole reliance on roughening for temporary erosion control is of limited effectiveness in intense rainfall events. Stair-step grading may not be practical for sandy, steep, or shallow soils.

1. Disturbed areas that will not require mowing may be stair-step graded, grooved, or left rough after filling
2. Stair Step grading is particularly appropriate in soils containing large amounts of soft rock. Each "step" catches material that sloughs from above, and provides a level site where vegetation can become established. Stairs should be wide enough to work with standard earth moving equipment. Stair steps must be on contour or gullies will form on the slope.
3. Areas that will be mowed (slopes less steep than 3:1) may have small furrows left by disking, harrowing, raking, or seed-planting machinery operated on the contour.
4. Graded areas with slopes greater than 3:1 but less than 2:1 should be roughened before seeding. This can be accomplished in a variety of ways, including "track walking" or driving a crawler tractor up and down the slope, leaving a pattern of cleat imprints parallel to slope contours.
5. Tracking is done by operating equipment up and down the slope to leave horizontal depressions in the soil.

Maintenance Standards

Periodically check roughened, seeded, planted, and mulched slopes for rills and gullies, particularly after a significant storm event. Fill these areas slightly above the original grade, then re-seed and mulch as soon as possible.

FIGURE D.3.2.A SURFACE ROUGHING

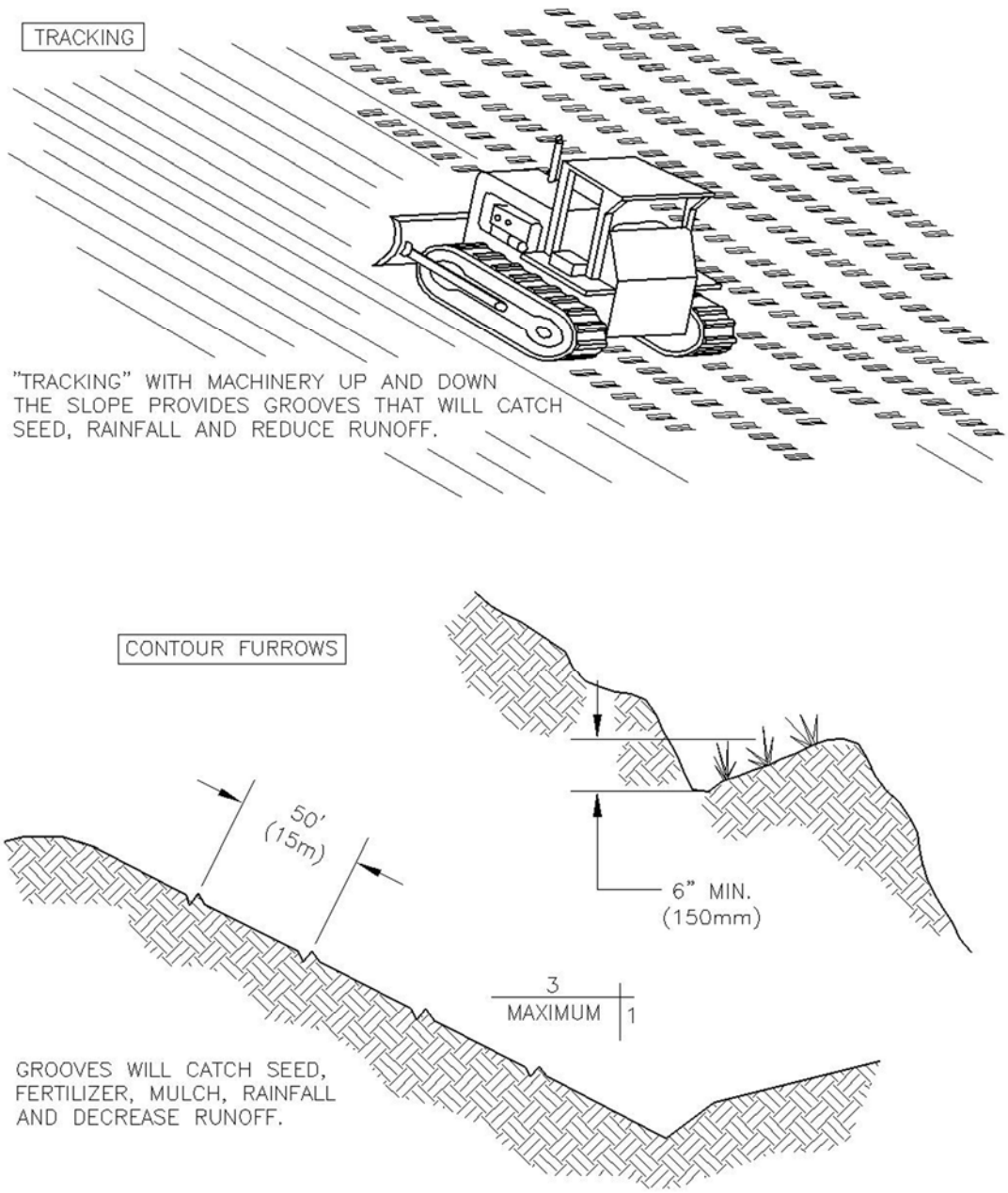

SURFACE ROUGHENING BY TRACKING AND CONTOUR FURROWS

D.3.3.3 VEGETATED STRIP

Code: VS Symbol: 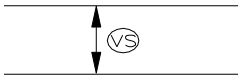

Purpose

Vegetated strips reduce the transport of coarse sediment from a construction site by providing a temporary physical barrier to sediment and reducing the runoff velocities of overland flow.

Conditions of Use

1. Vegetated strips may be used downslope of all disturbed areas.
2. Vegetated strips are not intended to treat concentrated flows, nor are they intended to treat substantial amounts of overland flow. Any concentrated flows must be conveyed through the drainage system to a sediment trap or pond. The only circumstance in which overland flow may be treated solely by a strip, rather than by a sediment trap or pond, is when the area draining to the strip is small (see "Criteria for Use as Primary Treatment" on page D-30).

Design and Installation Specifications

1. The vegetated strip shall consist of a 25-foot minimum width continuous strip of dense vegetation with a permeable topsoil. Grass-covered, landscaped areas are generally not adequate because the volume of sediment overwhelms the grass. Ideally, vegetated strips shall consist of undisturbed native growth with a well-developed soil that allows for infiltration of runoff.
2. The slope within the strip shall not exceed 4H:1V.
3. The uphill boundary of the vegetated strip shall be delineated with clearing limits as specified in Section D.3.1 (p. D-8).

Maintenance Standards

1. Any areas damaged by erosion or construction activity shall be seeded immediately and protected by mulch.
2. If more than 5 feet of the original vegetated strip width has had vegetation removed or is being eroded, sod must be installed using the standards for installation found in Section D.4.2.5.

If there are indications that concentrated flows are traveling across the buffer, surface water controls must be installed to reduce the flows entering the buffer, or additional perimeter protection must be installed.

D.3.3.4 TRIANGULAR SILT DIKE (GEOTEXTILE ENCASED CHECK DAM)

Code: TSD Symbol:

Purpose

Triangular silt dikes (TSDs) may be used as check dams, for perimeter protection, for temporary soil stockpile protection, for drop inlet protection, or as a temporary interceptor dike. Silt dikes, if attached to impervious surfaces with tack or other adhesive agent may also be used as temporary wheel wash areas, or concrete washout collection areas.

Conditions of Use

1. May be used for temporary check dams in ditches.

D.3.4.3 WHEEL WASH

Code: WW Symbol:

Purpose

Wheel wash systems reduce the amount of sediment transported onto paved roadways and into surface water systems by construction vehicles.

Conditions of Use

When a stabilized construction entrance is not preventing sediment from being tracked onto pavement:

- Wheel washing is generally an effective erosion and sediment control method and BMP when installed with careful attention to topography. For example, a wheel wash can be detrimental if installed at the top of a slope abutting a right-of-way where the water from the dripping truck wheels and undercarriage can run unimpeded into the street.
- Pressure washing combined with an adequately sized and properly surfaced wash pad with direct drainage discharge to a large 10 foot x 10-foot sump can be very effective.

Design and Installation Specifications

A suggested detail is shown in Figure D.3.4.B.

1. A minimum of 6inches of asphalt treated base (ATB) over crushed base material or 8 inches over a good subgrade is recommended to pave the wheel wash area.
2. Use a low clearance truck to test the wheel wash before paving. Either a belly dump or lowboy will work well to test clearance.
3. Keep the water level from 12 to 14 inches deep to avoid damage to truck hubs and filling the truck tongues with water.
4. Midpoint spray nozzles are only needed in very muddy conditions.
5. Wheel wash systems should be designed with a small grade change, 6 to 12 inches for a 10-foot wide pond, to allow sediment to flow to the low side of the pond and to help prevent re-suspension of sediment.
6. A drainpipe with a 2 to 3 foot riser should be installed on the low side of the wheel wash pond to allow for easy cleaning and refilling. Polymers may be used to promote coagulation and flocculation in a closed-loop system.
7. Polyacrylamide (PAM) added to the wheel washwater at a rate of 0.25 – 0.5 pounds per 1,000 gallons of water increases effectiveness and reduces cleanup time. If PAM is already being used for dust or erosion control and is being applied by a water truck, the same truck may be used to change the washwater.

Maintenance Standards

1. The wheel wash should start out each day with clean, fresh water.
2. The washwater should be changed a minimum of once per day. On large earthwork jobs where more than 10-20 trucks per hour are expected, the washwater will need to be changed more often.
3. Wheel wash or tire bath wastewater shall be discharged to a separate on-site treatment system, such as a closed-loop recirculation system or land application, or to the sanitary sewer system with proper local sewer district approval or permits.

FIGURE D.3.4.B WHEEL WASH AND PAVED CONSTRUCTION ENTRANCE

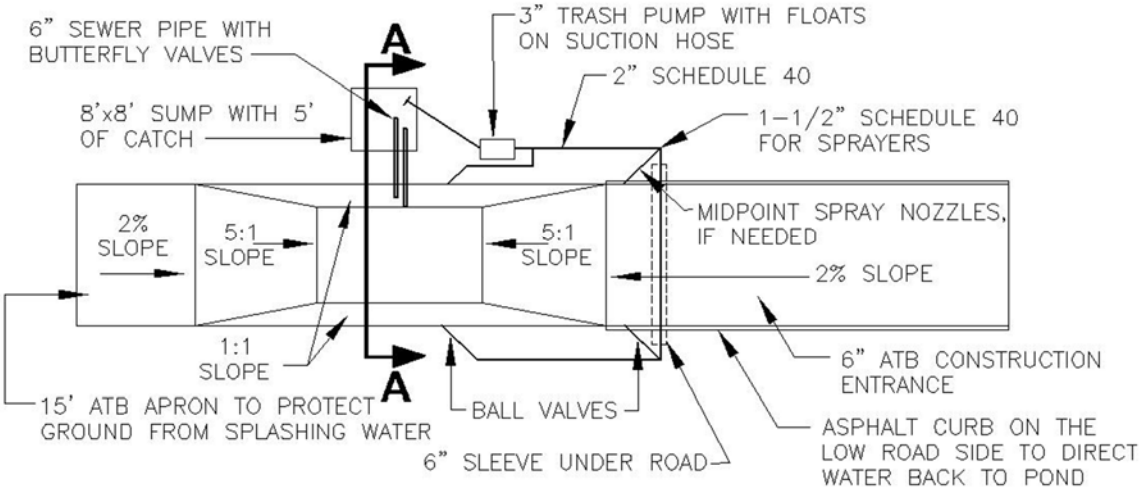

PLAN VIEW

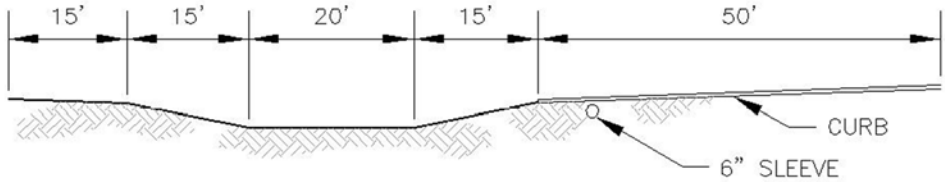

ELEVATION VIEW

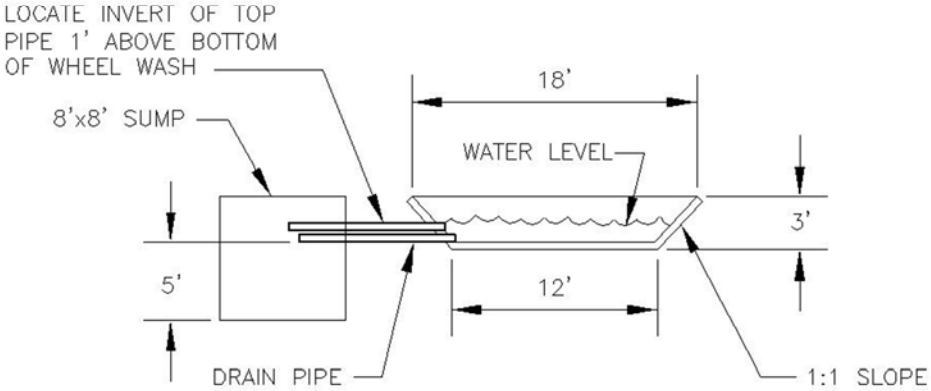

SECTION A–A

NOTES:

1. BUILD 8'x8' SUMP TO ACCOMODATE CLEANING BY TRACKHOE.

WHEEL WASH

Attachment D
Site Inspection Forms and Site Log

The results of each inspection shall be summarized in an inspection report or checklist that is entered into or attached to the site log book. It is suggested that the inspection report or checklist be included in this attachment to keep monitoring and inspection information in one document, but this is optional. However, it is mandatory that this SWPPP and the site inspection forms be kept on site at all times during construction, and that inspections be performed and documented as outlined below.

At a minimum, each inspection report or checklist shall include the following:

1. Inspection date/times
2. Weather information: general conditions during inspection, approximate amount of precipitation since the last inspection, and approximate amount of precipitation within the last 24 hours
3. A summary or list of all BMPs that have been implemented, including observations of all erosion/sediment control structures or practices
4. The following shall be noted:
    a. Locations of BMPs inspected
    b. Locations of BMPs that need maintenance
    c. The reason maintenance is needed
    d. Locations of BMPs that failed to operate as designed or intended
    e. Locations where additional or different BMPs are needed, and the reason(s) why
    f. A description of stormwater discharged from the site; the presence of suspended sediment, turbid water, discoloration, and/or oil sheen shall be noted, as applicable
    g. A description of any water quality monitoring performed during inspection, and the results of that monitoring
    h. General comments and notes, including a brief description of any BMP repairs, maintenance or installations made as a result of the inspection
    i. A statement that, in the judgment of the person conducting the site inspection, the site is either in compliance or out of compliance with the terms and conditions of the SWPPP and the NPDES permit. If the site inspection indicates that the site is out of compliance, the inspection report shall include a summary of the remedial actions required to bring the site back into compliance, as well as a schedule of implementation
    j. Name, title, and signature of person conducting the site inspection; and the following statement: "I certify under penalty of law that this report is true, accurate, and complete, to the best of my knowledge and belief"

When the site inspection indicates that the site is not in compliance with any terms and conditions of the NPDES permit, the Permittee shall take immediate action(s) to stop, contain, and clean up the

unauthorized discharges or otherwise stop the non-compliance; correct the problem(s); implement appropriate BMPs and/or conduct maintenance of existing BMPs; and achieve compliance with all applicable standards and permit conditions. In addition, if the non-compliance causes a threat to human health or the environment, the Permittee shall comply with the non-compliance notification requirements in Special Condition S5.F of the permit.

Construction Stormwater Site Inspection Form

Project Name: Brink Park Permit #_____ Inspection Date _____ Time _____

Name of Certified Erosion Sediment Control Lead (CESCL) or qualified inspector if *less than one acre*
Print Name: _____

Approximate rainfall amount since the last inspection (in inches): _____

Approximate rainfall amount in the last 24 hours (in inches): _____

Current Weather Clear ☐ Cloudy ☐ Mist ☐ Rain ☐ Wind ☐ Fog ☐

A. Type of inspection: Weekly ☐ Post Storm Event ☐ Other ☐

B. Phase of Active Construction (*check all that apply*):

Pre-Construction/installation of erosion/sediment controls	☐	Clearing/Demo/Grading	☐	Infrastructure/storm/roads	☐
Concrete pours	☐	Vertical Construction/buildings	☐	Utilities	☐
Offsite improvements	☐	Site temporary stabilized	☐	Final stabilization	☐

C. Questions:

1. Were all areas of construction and discharge points inspected? Yes __ No _
2. Was the in-water turbidity curtain perimeter inspected? Yes __ No _
3. Did you observe the presence of suspended sediment, turbidity, discoloration, or oil sheen Yes __ No _
4. Was a water quality sample taken during inspection? (*refer to permit conditions S4 & S5*) Yes __ No _
5. Was there a turbid discharge 250 NTU or greater, or Transparency 6 cm or less?* Yes __ No _
6. If yes to #4 was it reported to Ecology? Yes __ No _
7. Is pH sampling required? pH range required is 6.5 to 8.5. Yes __ No _

If answering yes to a discharge, describe the event. Include when, where, and why it happened; what action was taken, and when.

_____

_____

_____

*If answering yes to # 4 record NTU/Transparency with continual sampling daily until turbidity is 25 NTU or less/ transparency is 33 cm or greater.

Sampling Results: Date: _____

Parameter	Method (circle one)	Result			Other/Note
		NTU	cm	pH	
Turbidity	tube, meter, laboratory				
pH	Paper, kit, meter				

D. Check the observed status of all items. Provide "Action Required "details and dates.

Element #	Inspection	BMPs Inspected			BMP needs maintenance	BMP failed	Action required (describe in section F)
		yes	no	n/a			
1 Clearing Limits	Before beginning land disturbing activities are all clearing limits, natural resource areas (streams, wetlands, buffers, trees) protected with barriers or similar BMPs? (high visibility recommended)						
2 Construction Access	Construction access is stabilized with quarry spalls or equivalent BMP to prevent sediment from being tracked onto roads?						
	Sediment tracked onto the road way was cleaned thoroughly at the end of the day or more frequent as necessary.						
3 Control Flow Rates	Are flow control measures installed to control stormwater volumes and velocity during construction and do they protect downstream properties and waterways from erosion?						
	If permanent infiltration ponds are used for flow control during construction, are they protected from siltation?						
4 Sediment Controls	All perimeter sediment controls (e.g. silt fence, wattles, compost socks, berms, etc.) installed, and maintained in accordance with the Stormwater Pollution Prevention Plan (SWPPP).						
	Sediment control BMPs (sediment ponds, traps, filters etc.) have been constructed and functional as the first step of grading.						
	Stormwater runoff from disturbed areas is directed to sediment removal BMP.						
5 Stabilize Soils	Have exposed un-worked soils been stabilized with effective BMP to prevent erosion and sediment deposition?						

Construction Stormwater Site Inspection Form

Element #	Inspection	BMPs Inspected			BMP needs maintenance	BMP failed	Action required (describe in section F)
		yes	no	n/a			
5 Stabilize Soils Cont.	Are stockpiles stabilized from erosion, protected with sediment trapping measures and located away from drain inlet, waterways, and drainage channels?						
	Have soils been stabilized at the end of the shift, before a holiday or weekend if needed based on the weather forecast?						
6 Protect Slopes	Has stormwater and ground water been diverted away from slopes and disturbed areas with interceptor dikes, pipes and or swales?						
	Is excavated material placed on uphill side of trenches consistent with safety and space considerations?						
7 Drain Inlets	Are existing storm drains within the influence of the project protected?						
8 Stabilize Channel and Outlets	Have all on-site conveyance channels been designed, constructed and stabilized to prevent erosion from expected peak flows?						
	Is stabilization, including armoring material, adequate to prevent erosion of outlets, adjacent stream banks, slopes and downstream conveyance systems?						
9 Control Pollutants	Are waste materials and demolition debris handled and disposed of to prevent contamination of stormwater?						
	Has cover been provided for all chemicals, liquid products, petroleum products, and other material?						
	Has secondary containment been provided capable of containing 110% of the volume?						
	Were contaminated surfaces cleaned immediately after a spill incident?						
	Were BMPs used to prevent contamination of stormwater by a pH modifying sources?						

Construction Stormwater Site Inspection Form

Element #	Inspection	BMPs Inspected			BMP needs maintenance	BMP failed	Action required (describe in section F)
		yes	no	n/a			
9 Cont.	Wheel wash wastewater is handled and disposed of properly.						
10 Control Dewatering	Concrete washout in designated areas. No washout or excess concrete on the ground.						
	Dewatering has been done to an approved source and in compliance with the SWPPP.						
	Were there any clean non turbid dewatering discharges?						
11 Maintain BMP	Are all temporary and permanent erosion and sediment control BMPs maintained to perform as intended?						
12 Maintain In-Water Turbidity Curtain	Has the entire perimeter of the turbidity curtain been inspected and maintained to perform as intended?						
13 Manage the Project	Has the project been phased to the maximum degree practicable?						
	Has regular inspection, monitoring and maintenance been performed as required by the permit?						
	Has the SWPPP been updated, implemented and records maintained?						
14 Protect LID	No LID Facilities were identified on the Project site.						

E. Check all areas that have been inspected. ✔

All in place BMPs ☐ All disturbed soils ☐ All concrete wash out area ☐ All material storage areas ☐
All discharge locations ☐ All equipment storage areas ☐ All construction entrances/exits ☐

F. Elements checked "Action Required" (section D) describe corrective action to be taken. List the element number; be specific on location and work needed. Document, initial, and date when the corrective action has been completed and inspected.

Element #	Description and Location	Action Required	Completion Date	Initials

Attach additional page if needed

Sign the following certification:

"I certify that this report is true, accurate, and complete, to the best of my knowledge and belief"

Inspected by: (print) _____ (Signature) _____ Date: _____

Title/Qualification of Inspector: _

Attachment E
303(d) List Waterbodies and TMDL Waterbodies Information

Listing ID: 12206

Main Listing Information

Listing ID: 12206
Waterbody Name: WASHINGTON LAKE
Medium: Water
Parameter: Bacteria
WQI Project: None Assigned
Designated Use: None Assigned

2014 Category: 5
2012 Category: 5
2008 Category: 5
2004 Category: 5
On 1998 303(d) List?: Y
On 1996 303(d) List?: Y

Assessment Unit

Assessment Unit ID: 47122G2H0

Location Identification

Counties: King
WRIA: 8 - Cedar-Sammamish
Waterbody ID (WBID): WA-08-9350
Waterbody Class: LAK
Town/Range/Section (Legacy): None Assigned

Basis

King County unpublished data from station A422SB show a geometric mean of 74 cfu/100mL with 45% exceeding the percentile criterion during 1998. King County unpublished data from station A422SB show a geometric mean of 23 cfu/100mL with 0% exceeding the percentile criterion during 1999.

Remarks

No Remarks Entered

EIM

No EIM Records Entered

Appendix E
TIR Worksheet

TECHNICAL INFORMATION REPORT (TIR) WORKSHEET

Part 1 PROJECT OWNER AND PROJECT ENGINEER

Project Owner: City of Kirkland, Washington
Phone: 425-587-3827
Address: 123 5th Avenue
Kirkland, WA 98033
Project Engineer: David Rice, PE
Company: Anchor QEA, LLC
Phone: 206-287-9130

Part 2 PROJECT LOCATION AND DESCRIPTION

Project Name: David E. Brink Shoreline Renovation
DPER Permit #: _____
Location Township: 25N
Range: 5E
Section: 8
Site Address: 555 Lake Street South, Kirkland WA 98033

Part 3 TYPE OF PERMIT APPLICATION

- ☐ Landuse (e.g.,Subdivision / Short Subd. / UPD)
- ☐ Building (e.g.,M/F / Commercial / SFR)
- ☒ Clearing and Grading
- ☐ Right-of-Way Use
- ☐ Other _____

Part 4 OTHER REVIEWS AND PERMITS

- ☒ DFW HPA
- ☒ COE 404
- ☐ DOE Dam Safety
- ☐ FEMA Floodplain
- ☐ COE Wetlands
- ☐ Other _____
- ☒ Shoreline Management
- ☒ Structural Rockery/Vault/_____
- ☒ ESA Section 7

Part 5 PLAN AND REPORT INFORMATION

Technical Information Report

Type of Drainage Review (check one):
- ☒ Full
- ☐ Targeted
- ☐ Simplified
- ☐ Large Project
- ☐ Directed

Date (include revision dates): _____
Date of Final: _____

Site Improvement Plan (Engr. Plans)

Plan Type (check one):
- ☒ Full
- ☐ Modified
- ☐ Simplified

Date (include revision dates): _____
Date of Final: _____

Part 6 SWDM ADJUSTMENT APPROVALS

Type (circle one): Standard / Experimental / Blanket

Description: (include conditions in TIR Section 2)

N/A

Approved Adjustment No. _____ Date of Approval: _____

TECHNICAL INFORMATION REPORT (TIR) WORKSHEET

Part 7 MONITORING REQUIREMENTS

Monitoring Required: Yes / (No)

Start Date: _____

Completion Date: _____

Describe: _____

Re: KCSWDM Adjustment No. _____

Part 8 SITE COMMUNITY AND DRAINAGE BASIN

Community Plan : _____

Special District Overlays: _____

Drainage Basin: Moss Bay Drainage Basin

Stormwater Requirements: _____

Part 9 ONSITE AND ADJACENT SENSITIVE AREAS

- ☐ River/Stream _____
- ☒ Lake Lake Washington
- ☐ Wetlands _____
- ☐ Closed Depression _____
- ☐ Floodplain _____
- ☐ Other _____
- ☐ Steep Slope _____
- ☐ Erosion Hazard _____
- ☒ Landslide Hazard Moderate to high
- ☐ Coal Mine Hazard _____
- ☐ Seismic Hazard _____
- ☐ Habitat Protection _____
- ☐ _____

Part 10 SOILS

Soil Type	Slopes	Erosion Potential
Arents, Alderwood material	6 to 15 percent slopes	Average K Factor = 0.15

- ☐ High Groundwater Table (within 5 feet)
- ☐ Other _____
- ☐ Sole Source Aquifer
- ☐ Seeps/Springs

☐ Additional Sheets Attached

TECHNICAL INFORMATION REPORT (TIR) WORKSHEET

Part 11 DRAINAGE DESIGN LIMITATIONS	
REFERENCE	LIMITATION / SITE CONSTRAINT
☐ Core 2 – Offsite Analysis	
☐ Sensitive/Critical Areas	
☐ SEPA	
☐ LID Infeasibility	
☐ Other	
☒ NO NEW WATER QUALITY OR FLOW CONTROL BMPs ARE REQUIRED FOR THIS PROJECT.	
☐ Additional Sheets Attached	

Part 12 TIR SUMMARY SHEET (provide one TIR Summary Sheet per Threshold Discharge Area)	
Threshold Discharge Area: (name or description) 1	
Core Requirements (all 8 apply):	
Discharge at Natural Location	Number of Natural Discharge Locations: 2
Offsite Analysis	Level: 1 / 2 / 3 dated:
Flow Control (include facility summary sheet)	Level: 1 / 2 / 3 or Exemption Number Flow Control BMPs NONE REQUIRED
Conveyance System	Spill containment located at: NONE REQUIRED
Erosion and Sediment Control / Construction Stormwater Pollution Prevention	CSWPP/CESCL/ESC Site Supervisor: TBD Contact Phone: After Hours Phone:
Maintenance and Operation	Responsibility (circle one): Private / (Public) If Private, Maintenance Log Required: Yes / No
Financial Guarantees and Liability	Provided: Yes / (No)
Water Quality (include facility summary sheet)	Type (circle one): Basic / Sens. Lake / Enhanced Basic / Bog or Exemption No. Landscape Management Plan: Yes / No
Special Requirements (as applicable):	
Area Specific Drainage Requirements	Type: CDA / SDO / MDP / BP / LMP / Shared Fac. / (None) Name:
Floodplain/Floodway Delineation	Type (circle one): Major / Minor / Exemption / (None) 100-year Base Flood Elevation (or range): Datum:
Flood Protection Facilities	Describe: N/A

TECHNICAL INFORMATION REPORT (TIR) WORKSHEET

Part 12 TIR SUMMARY SHEET (provide one TIR Summary Sheet per Threshold Discharge Area)	
Source Control (commercial / industrial land use)	Describe land use: Park/Recreation Describe any structural controls: None
Oil Control	High-use Site: Yes / (No) Treatment BMP: _____ Maintenance Agreement: Yes / No with whom? _____
Other Drainage Structures	
Describe:	

Part 13 EROSION AND SEDIMENT CONTROL REQUIREMENTS		
MINIMUM ESC REQUIREMENTS DURING CONSTRUCTION		MINIMUM ESC REQUIREMENTS AFTER CONSTRUCTION
☒ Clearing Limits		☒ Stabilize exposed surfaces
☒ Cover Measures		☒ Remove and restore Temporary ESC Facilities
☒ Perimeter Protection		☒ Clean and remove all silt and debris, ensure operation of Permanent Facilities, restore operation of Flow Control BMP Facilities as necessary
☒ Traffic Area Stabilization		☐ Flag limits of SAO and open space preservation areas
☒ Sediment Retention		☐ Other _____
☐ Surface Water Collection		
☐ Dewatering Control		
☒ Dust Control		
☐ Flow Control		
☐ Protection of Flow Control BMP Facilities (existing and proposed)		
☒ Maintain BMPs / Manage Project		

Part 14 STORMWATER FACILITY DESCRIPTIONS (Note: Include Facility Summary and Sketch)				
Flow Control	Type/Description		Water Quality	Type/Description
☐ Detention	_____		☐ Vegetated Flowpath	_____
☐ Infiltration	_____		☐ Wetpool	_____
☐ Regional Facility	_____		☐ Filtration	_____
☐ Shared Facility	_____		☐ Oil Control	_____
☐ Flow Control BMPs	_____		☐ Spill Control	_____
NO NEW STORMWATER FACILITIES REQUIRED, PROJECT WILL NOT INCREASE DISCHARGE MORE THAN 0.15 CFS AND NO POLLUTION GENERATING SURFACES ARE BEING ADDED.				

TECHNICAL INFORMATION REPORT (TIR) WORKSHEET

Part 15 EASEMENTS/TRACTS		Part 16 STRUCTURAL ANALYSIS
❑ Drainage Easement		❑ Cast in Place Vault
❑ Covenant		❑ Retaining Wall
❑ Native Growth Protection Covenant		❑ Rockery > 4' High
❑ Tract		❑ Structural on Steep Slope
❑ Other N/A		❑ Other N/A

Part 17 SIGNATURE OF PROFESSIONAL ENGINEER
I, or a civil engineer under my supervision, have visited the site. Actual site conditions as observed were incorporated into this worksheet and the attached Technical Information Report. To the best of my knowledge the information provided here is accurate.
Signed/Date

APPENDIX E:
SWPPP

City of Kirkland

July 2020
David E. Brink Park Shoreline Renovation

Stormwater Pollution Prevention Plan

Prepared for City of Kirkland Parks and Community Services Department

July 2020
David E. Brink Park Shoreline Renovation

Stormwater Pollution Prevention Plan

Prepared for
City of Kirkland
Parks and Community Services Department
505 Market Street, Suite A
Kirkland, Washington 98033

Prepared by
Anchor QEA, LLC
1201 3rd Avenue, Suite 2600
Seattle, Washington 98101

Project Number: 191006-01.02

Stormwater Pollution Prevention Plan

For

David E. Brink Park Shoreline Renovation

Prepared For

Department of Ecology – Northwest Regional Office
3190 – 160th Avenue SE
Bellevue, WA 98008-5452
425-649-7000

Owner, Developer, and Operator/Contractor

City of Kirkland: Brian Baker, Public Works
123 5th Avenue
Kirkland, WA 98033

Project Site Location

555 Lake Street South
Kirkland, WA 98033

Certified Erosion and Sediment Control Lead

Adam Carlson, P.E., CESCL

SWPPP Prepared By

Anchor QEA, LLC
1201 3rd Avenue Suite 2600
Seattle, WA 98101
206-287-9130
Joshua Sexton, P.E., Water Resources Engineer
David Rice, P.E., Senior Managing Water Resources Engineer

SWPPP Preparation Date

July 8, 2020

Approximate Project Construction Dates

Summer/Fall 2021
Winter 2022

TABLE OF CONTENTS

1 Introduction 1

2 Site Description 4

2.1 Existing Conditions 4

2.2 Proposed Construction Activities 4

3 Construction Stormwater BMPs 6

3.1 The 13 BMP Elements 6

3.1.1 Element 1 – Preserve Vegetation/Mark Clearing Limits 6

3.1.2 Element 2 – Establish Construction Access 6

3.1.3 Element 3 – Control Flow Rates 7

3.1.4 Element 4 – Install Sediment Controls 7

3.1.5 Element 5 – Stabilize Soils 8

3.1.6 Element 6 – Protect Slopes 9

3.1.7 Element 7 – Protect Drain Inlets 9

3.1.8 Element 8 – Stabilize Channels and Outlets 10

3.1.9 Element 9 – Control Pollutants 11

3.1.10 Element 10 – Control Dewatering 14

3.1.11 Element 11 – Maintain BMPs 15

3.1.12 Element 12 – Manage the Project 15

3.1.13 Element 13 – Protect Low Impact Development 17

3.2 Site-Specific BMPs 17

4 Construction Phasing and BMP Implementation 18

5 Pollution Prevention Team 19

5.1 Roles and Responsibilities 19

5.2 Team Members 19

6 Monitoring and Sampling Requirements 21

6.1 Site Inspection 21

6.1.1 Site Inspection Frequency 21

6.1.2 Site Inspection Documentation 21

6.2 Stormwater Quality Monitoring 22

6.2.1 Turbidity Sampling 22

6.2.2 pH Sampling 23

7 Discharges to 303(d) or Total Maximum Daily Load Waterbodies 24
7.1 303(d) Listed Waterbodies 24
7.2 TMDL Waterbodies 24
8 Recordkeeping and Reporting 25
8.1 Recordkeeping 25
8.1.1 Site Log Book 25
8.1.2 Records Retention 25
8.1.3 Access to Plans and Records 25
8.1.4 Updating the SWPPP 25
8.2 Reporting 26
8.2.1 Discharge Monitoring Reports 26
8.2.2 Notification of Noncompliance 26
9 References 27

TABLES

Table 2-1 Drainage Areas and Stormwater Runoff Flows 5
Table 4-1 BMP Implementation Schedule 18
Table 5-1 Pollution Prevention Team Contact Information 20

ATTACHMENTS

Attachment A Exhibits and TESC Plans
Attachment B Construction BMPs
Attachment C Alternative Construction BMPs
Attachment D Site Inspection Forms and Site Log
Attachment E 303(d) List Waterbodies and TMDL Waterbodies Information

ABBREVIATIONS

ADA	Americans with Disabilities Act
BMP	best management practice
CESCL	Certified Erosion and Sediment Control Lead
cm	Centimeter
CO_2	carbon dioxide
CSWGP	Construction Stormwater General Permit
DMR	Discharge Monitoring Report
Ecology	Washington Department of Ecology
KCSWDM	*King County Surface Water Design Manual*
KMC	City of Kirkland Municipal Code
MSDS	Material Safety Data Sheet
NPDES	National Pollutant Discharge Elimination System
NTU	nephelometric turbidity unit
OWH	ordinary high water
Project	David E. Brink Park Shoreline Renovation Project
SPCC	Spill Prevention, Control, and Countermeasure
SWPPP	Stormwater Pollution Prevention Plan
TESC	temporary erosion and sediment control
TIR	Technical Information Report
TMDL	Total Maximum Daily Load

1 Introduction

This Stormwater Pollution Prevention Plan (SWPPP) has been prepared as part of the National Pollutant Discharge Elimination System (NPDES) stormwater permit requirements for the David E. Brink Park Shoreline Renovation Project (Project) in Kirkland, Washington. The Project is located at 555 Lake Street South in Kirkland, King County, Washington (see Exhibit 1, Attachment A). The Project includes the following:

- Removing and replacing a portion of the concrete bulkhead with a vinyl sheetpile wall with concrete cap at the north end and basalt rockery at the south end of the Park
- Removing and replacing the shoreline water access stairs south of the existing pier with a shorter stair feature
- Replacing the existing pier timber decking with a new grated decking
- Installing terraced rock walls and vegetated areas behind the south end rockery with native low shoreline plantings
- Removing existing derelict piling near the shoreline
- Creating two new pocket beaches with native shoreline plantings
- Placing habitat gravel waterward of the shoreline protection features and pocket beaches
- Constructing Americans with Disabilities Act (ADA)-compliant public access pathways

The purpose of this SWPPP is to describe the proposed construction activities and the temporary and permanent erosion and sediment control measures, pollution prevention measures, inspection/monitoring activities, and recordkeeping that shall be implemented during the proposed construction project.

This SWPPP is intended to be reviewed with construction documentation to support final Project permitting for construction and to provide guidance for selection and implementation of required construction stormwater pollution prevention measures.

A Drainage Technical Information Report (TIR) has been prepared and submitted with this SWPPP for the Project. The TIR is the comprehensive report containing the technical information and analyses to demonstrate compliance with stormwater requirements. The TIR incorporates the SWPPP as Appendix D of the TIR. The TIR supports the stormwater design as shown on the Project construction plans.

The Project construction plans include temporary erosion and sediment control (TESC) drawings. The TESC drawings are included in Attachment A of this document and specifically address work to be undertaken in areas above the ordinary high water (OHW) line. Work to be undertaken below the OHW line shall comply with the Section 404 permit issued by the U.S. Army Corps of Engineers, the Hydraulic Project Approval issued by the Washington Department of Fish and Wildlife, the

Section 401 Certificate issued by the Washington Department of Ecology (Ecology), and other applicable permit requirements.

The following are the objectives of the SWPPP:

1. Implement best management practices (BMPs) to minimize the potential for erosion and sedimentation, and to identify, reduce, eliminate, or control stormwater contamination and water pollution from construction activity.
2. Prevent violations of surface water quality, groundwater quality, or sediment management standards.
3. Prevent adverse water quality impacts during the construction phase, including impacts on beneficial uses of the receiving water, by controlling peak flow rates and volumes of stormwater runoff at the City of Kirkland's outfalls and downstream of the outfalls.

This SWPPP was prepared using the Ecology SWPPP template downloaded from the Ecology website on February 14, 2020. The proposed Project will disturb less than 1 acre, so coverage is not required under the Washington State Construction Stormwater General Permit (CSWGP). However, preparation of a SWPPP consistent with what would be required for CSWGP compliance and implementation of temporary erosion control measures are required by the Kirkland Municipal Code (KMC). This SWPPP was prepared based on the requirements set forth in the CSWGP, which can be found on the Ecology website,[1] the *2016 King County Surface Water Design Manual* (KCSWDM), the KMC, and the *City of Kirkland Addendum to the 2016 King County Surface Water Design Manual*.

The SWPPP will be incorporated as an appendix to the construction specifications for the proposed project, and the Contractor will be required to maintain a copy of the SWPPP on site at all times. The SWPPP will be considered a living document; the Contractor will be required to update the SWPPP to address site conditions and reflect Contractor-proposed modifications to the BMPs proposed herein. The Contractor will be fully responsible for implementing the measures outlined in the SWPPP. Once under contract, the Contractor's Certified Erosion and Sediment Control Lead (CESCL) will replace the temporary CESCL list on the cover of the SWPPP.

The SWPPP is divided into main sections with attachments that include stormwater-related reference materials. The following are the topics presented in each of the main sections:

- Section 1 – Introduction. This section provides a summary description of the Project and the organization of the SWPPP document.

[1] https://ecology.wa.gov/Regulations-Permits/Permits-certifications/Stormwater-general-permits/Construction-stormwater-permit

- Section 2 – Site Description. This section provides a detailed description of the existing site conditions, proposed construction activities, and calculated stormwater flow rates for existing and post–construction conditions.
- Section 3 – Construction Stormwater BMPs. This section provides a detailed description of the BMPs to be implemented based on the 13 required elements of the SWPPP.
- Section 4 – Construction Phasing and BMP Implementation. This section provides a description of the timing of the BMP implementation in relation to the Project schedule.
- Section 5 – Pollution Prevention Team. This section identifies the appropriate contact names (emergency and non-emergency), monitoring personnel, and the on-site TESC inspector.
- Section 6 – Monitoring and Sampling Requirements. This section provides a description of the inspection and monitoring requirements such as the parameters of concern to be monitored, sample locations, sample frequencies, and sampling methods for stormwater discharge locations from the site.
- Section 7 – Discharges to 303(d) or Total Maximum Daily Load Waterbodies. This section provides information on the 303(d) listed impairments and Total Maximum Daily Load requirements.
- Section 8 – Recordkeeping and Reporting. This section describes the requirements for documentation of the BMP implementation, site inspections, monitoring results, reporting, and changes to the implementation of certain BMPs due to site factors experienced during construction.
- Section 9 – References.

Supporting documentation and standard forms are provided in the following attachments:

- Attachment A – Exhibits and TESC Plans
- Attachment B – Construction BMPs
- Attachment C – Alternative Construction BMPs
- Attachment D – Site Inspection Forms and Site Log
- Attachment E – 303(d) List Waterbodies and TMDL Waterbodies Information

2 Site Description

2.1 Existing Conditions

The approximately 1-acre Park is owned and maintained by the City of Kirkland. It is bordered by condominiums to the south and north, Lake Street South to the east, and Lake Washington to the west. The Park includes 660 linear feet of Lake Washington shoreline.

The Park gently slopes immediately landward of the bulkhead along the Lake Washington shoreline. The slope steepens as it approaches Lake Street South. The Park includes a pathway loop that begins in the north with a 5-foot-wide concrete stairway connecting Lake Street to the multiuse concrete path at the shoreline. The stairway does not provide ADA-compliant universal access. The path follows the shoreline adjacent to the existing bulkhead toward the pier. The path continues to the south and up toward an ADA-compliant pathway that switchbacks up the hill to the Lake Street sidewalk.

An existing 15-foot by 20-foot concrete building, approximately 10 feet high, is located upland of the pier with an accessible door at the bottom of the sloped lawn area. The building is not currently used. The building is built into the slope and the rooftop is on grade with the adjacent Lake Street sidewalk. The rooftop is a publicly accessible viewing area with a perimeter guardrail and three benches. North of the rooftop deck along the Lake Street sidewalk, there is another overlook with a public art piece consisting of three cast bronze sculptures and a small water feature with low plantings.

The shoreline consists almost entirely of concrete bulkhead and rockeries. A 2014 shoreline structures assessment found that the shoreline structures at the Park range from “good” to “poor” and “very poor” condition (AESI 2014).

2.2 Proposed Construction Activities

The Project will include the following improvements:

- Removing and replacing a portion of the concrete bulkhead with a vinyl sheetpile wall with concrete cap at the north end and basalt rockery at the south end of the Park
- Removing and replacing the shoreline water access stairs south of the existing pier with a shorter stair feature
- Replacing the existing pier timber decking with a new grated decking
- Installing terraced rock walls and vegetated areas behind the south end rockery with native low shoreline plantings
- Removing existing derelict piling near the shoreline
- Creating two new pocket beaches with native shoreline plantings

- Placing habitat gravel waterward of the shoreline protection features and pocket beaches
- Constructing ADA-compliant public access pathways

Table 2-1 summarizes details regarding Project site drainage areas and computed stormwater runoff flows. Off-site areas and flows are not anticipated to change from existing conditions. All stormwater flow calculations are provided in the TIR for the Project.

Table 2-1
Drainage Areas and Stormwater Runoff Flows

Drainage Area or Stormwater Flow	Quantity
Total site area	0.92 acre (above OHW line)
Percent impervious area before construction	19.7%
Percent impervious area after construction	22.8%
Disturbed area during construction	0.33 acre
Disturbed area that is characterized as impervious (i.e., access roads, staging, parking)	0.11 acre
2-year stormwater runoff peak flow prior to construction (existing, from Project site)	0.12 cfs
10-year stormwater runoff peak flow prior to construction (existing, from Project site)	0.26 cfs
2-year stormwater runoff peak flow prior to construction (existing, off-site areas draining to 12-inch outfall at Project site)	0.13 cfs
10-year stormwater runoff peak flow prior to construction (existing, off-site areas draining to 12-inch outfall at Project site)	0.23 cfs
2-year stormwater runoff peak flow prior to construction (existing, off-site areas draining to 18-inch outfall at Project site)	6.83 cfs
10-year stormwater runoff peak flow prior to construction (existing, off-site areas draining to 18-inch outfall at Project site)	12.22 cfs
2-year stormwater runoff peak flow during and after construction (existing, from Project site)	0.13 cfs
10-year stormwater runoff peak flow during and after construction (existing, from Project site)	0.27 cfs

3 Construction Stormwater BMPs

3.1 The 13 BMP Elements

3.1.1 Element 1 – Preserve Vegetation/Mark Clearing Limits

To protect adjacent properties and to reduce the area of soil exposed to construction, the limits of construction shall be clearly marked before land-disturbing activities begin. Trees that are to be preserved, as well as all sensitive areas and their buffers, shall be clearly delineated, as shown on the design drawings. In general, natural vegetation and native topsoil shall be retained in an undisturbed state to the maximum extent possible. The BMPs relevant to marking the clearing limits that will be applied for this Project include the following:

- High-Visibility Plastic or Metal Fence

High-Visibility Plastic or Metal Fence shall be used to mark clearing limits for the Project and shall be placed prior to construction. Fences shall be maintained throughout the construction period. Natural vegetation shall be preserved for any areas beyond the clearing limits; no disturbance or removal of ground cover beyond the clearing limits shall be permitted. Where a silt fence is placed along the clearing limits, marking using High-Visibility Plastic or Metal Fence is not required. Additional details are provided on the TESC drawings in Attachment A and Attachment B.

Alternate BMPs for marking clearing limits are included in Attachment C as a quick reference tool for the on-site inspector in the event the BMP(s) listed above are deemed ineffective or inappropriate during construction to satisfy the requirements set forth in the CSWGP and the KMC. To avoid potential erosion and sediment control issues that may cause a violation(s) of the NPDES CSWGP, or the KMC, the CESCL shall promptly initiate the implementation of one or more of the alternative BMPs listed in Attachment C if the primary clearing limit BMPs are found to be ineffective.

3.1.2 Element 2 – Establish Construction Access

Construction access or activities occurring on unpaved areas shall be minimized. Where necessary, access points shall be stabilized to minimize the tracking of sediment onto public roads. Wheel washing, street sweeping, and street cleaning shall be employed, as needed, to prevent sediment from entering state waters. All wash wastewater shall be controlled on site. The specific BMPs related to establishing construction access that shall be used on this Project include the following:

- Stabilized Construction Entrance

The Stabilized Construction Entrance shall be implemented at the beginning of the Project and remain throughout the full period of construction. The entrance shall be located north of the planter box that is adjacent to the sidewalk. The entrance shall consist of geotextile beneath 4-inch to 8-inch

quarry spalls a minimum of 12 inches thick. The entrance pad shall be a minimum of 15 feet wide and 100 feet long. Additional details are provided on the TESC drawings in Attachment A and in the BMP description in Attachment B.

Alternate construction access BMPs are included in Attachment C as a quick reference tool for the on-site inspector in the event the BMP(s) listed above are deemed ineffective or inappropriate during construction to satisfy the requirements set forth in the CSWGP and the KMC. To avoid potential erosion and sediment control issues that may cause a violation(s) of the CSWGP and the KMC, the CESCL shall promptly initiate the implementation of one or more of the alternative BMPs listed in Attachment C if existing BMPs are determined to be ineffective.

3.1.3 Element 3 – Control Flow Rates

In order to protect the properties and waterways downstream of the Project site, stormwater discharges from the site shall be controlled. The specific BMPs for flow control that shall be used on this Project include the following:

- No BMPs are required to be implemented.

No properties or waterways downstream of the Project site require flow control protection. Stormwater runoff discharges from the site directly to Lake Washington. Because Lake Washington is listed in the KCSWDM as a major receiving body and meets the criteria for flow control exemption, no permanent flow controls are required.

3.1.4 Element 4 – Install Sediment Controls

All stormwater runoff from disturbed areas shall pass through an appropriate sediment removal BMP before leaving the construction site or prior to being discharged to an infiltration facility. The specific BMP to be used for controlling sediment on this Project is as follows:

- Silt Fence
- In-Water Turbidity Curtain
- Sediment Traps
- Temporary Stormwater Swales

Silt Fences shall be installed downslope of the grading areas. Silt Fences shall be installed after the Stabilized Construction Entrance is installed and prior to initiating other grading work. Silt Fences shall remain during the duration of the Project. Silt Fence shall consist of steel or wood posts no more than 8 feet apart with welded wire backing and filter fabric material (Mirafi 100X or equivalent) no less than 2 feet high. Additional details are provided on the TESC drawings in Attachment A and in the BMP description in Attachment B.

An In-Water Turbidity Curtain shall be installed and maintained in Lake Washington. The In-Water Turbidity Curtain shall consist of a continuous top floating tube and a continuous bottom pocket that can hold ballast weight (provided by a chain or metal bars inside the pocket). The curtain material shall be a permeable, woven geotextile material. The height of the curtain shall be at least 1 foot greater than the total height of the water column during high water stage along its entire length.

Temporary Stormwater Swales and Sediment Traps shall be installed downslope of the grading areas and just upslope from the Silt Fences. Temporary Stormwater Swales and Sediment Traps shall be installed after Silt Fences and prior to initiating other grading work. Additional details are provided on the TESC drawings in Attachment A and in the BMP description in Attachment B.

Alternate sediment control BMPs are included in Attachment C as a quick reference tool for the on-site inspector in the event the BMP(s) listed above are deemed ineffective or inappropriate during construction to satisfy the requirements set forth in the CSWGP and the KMC. To avoid potential erosion and sediment control issues that may cause a violation(s) of the CSWGP or the KMC, the CESCL shall promptly initiate the implementation of one or more of the alternative BMPs listed in Attachment C after the first sign that existing BMPs are ineffective or failing.

In addition, sediment shall be removed from paved areas in and adjacent to construction work areas manually or using mechanical sweepers, as needed, to minimize tracking of sediments on vehicle tires away from the site and to minimize wash off of sediments from adjacent streets in runoff.

3.1.5 Element 5 – Stabilize Soils

Exposed and unworked soils shall be stabilized with the application of effective BMPs to prevent erosion throughout the life of the Project. The specific BMPs for soil stabilization that shall be used on this Project include the following:

- Seeding
- Mulching
- Nets and Blankets
- Plastic Covering

Nets and Blankets or Plastic Covering shall be provided as temporary cover for exposed soils during construction. Additional details are provided on the TESC drawings in Attachment A and in the BMP description in Attachment B.

Alternate soil stabilization BMPs are included in Attachment C as a quick reference tool for the on-site inspector in the event the BMP(s) listed above are deemed ineffective or inappropriate during construction to satisfy the requirements set forth in the CSWGP and the KMC. To avoid potential

erosion and sediment control issues that may cause a violation(s) of the CSWGP or the KMC, the CESCL shall promptly initiate the implementation of one or more of the alternative BMPs listed in Attachment C after the first sign that existing BMPs are ineffective or failing.

The Project site is located west of the Cascade Mountain crest. As such, no soils shall remain exposed and unworked for more than 7 days during the dry season (May 1 to September 30) and 2 days during the wet season (October 1 to April 30). Regardless of the time of year, all soils shall be stabilized at the end of the shift before a holiday or weekend if needed based on weather forecasts.

In general, cut and fill slopes shall be stabilized as soon as possible, and soil stockpiles shall be temporarily covered with plastic sheeting. All stockpiled soils shall be stabilized from erosion, protected with a silt fence or other sediment controls, and where possible, shall be located away from storm drain inlets, waterways, and drainage channels.

3.1.6 Element 6 – Protect Slopes

All cut and fill slopes shall be designed, constructed, and protected in a manner that minimizes erosion. The following specific BMPs shall be used to protect slopes for this Project:

- Seeding
- Mulching
- Nets and Blankets
- Plastic Covering

Nets and Blankets shall be provided as temporary cover for exposed slopes during construction. Additional details are provided on the TESC drawings in Attachment A and in the BMP description in Attachment B.

Alternate slope protection BMPs are included in Attachment C as a quick reference tool for the on-site inspector in the event the BMP(s) listed above are deemed ineffective or inappropriate during construction to satisfy the requirements set forth in the CSWGP and the KMC. To avoid potential erosion and sediment control issues that may cause a violation(s) of the CSWGP or the KMC, the CESCL shall promptly initiate the implementation of one or more of the alternative BMPs listed in Attachment C after the first sign that existing BMPs are ineffective or failing.

3.1.7 Element 7 – Protect Drain Inlets

All existing storm drain inlets, or any new storm drain inlets and culverts made operable during construction, shall be protected to prevent unfiltered or untreated water from entering the drainage conveyance system. However, the first priority is to keep all access roads clean of sediment and prevent sediment-laden water from entering storm drains until treatment can be provided. A Storm

Drain Inlet Protection (catch basin insert) shall be implemented for all drainage inlets and culverts that could potentially be impacted by sediment-laden runoff on and near the Project site. The following drain inlet protection measures shall be applied on this Project:

- Storm Drain Inlet Protection

The Storm Drain Inlet Protection shall consist of catch basin filters located at all catch basin inlets within the Project area and adjacent to the Project site in Lake Street. They shall consist of a geotextile fabric that captures sediment for removal. Each insert shall have a built-in overflow or runoff that will allow water to pass through to the storm drain system during a storm event when the catch basin filter is full or plugged. Additional details are provided on the TESC drawings in Attachment A and in the BMP description in Attachment B.

If the BMP options listed above are deemed ineffective or inappropriate during construction to satisfy the requirements set forth in the CSWGP and the KMC, or if no BMPs are listed above but deemed necessary during construction, the CESCL shall implement one or more of the alternative BMP inlet protection options listed in Attachment C after the first sign that existing BMPs are ineffective or failing.

3.1.8 Element 8 – Stabilize Channels and Outlets

Where site runoff is to be conveyed in channels, or discharged to a stream or other natural drainage point, efforts shall be taken to prevent downstream erosion. The specific BMPs for channel and outlet stabilization that shall be used on this Project include the following:

- No BMPs are required to be implemented.

No channels or natural outlets are part of the existing drainage system at this Project site, and no temporary channels or outlets are anticipated or recommended; therefore, no BMPs from this element shall be implemented.

If channel and outlet stabilization is required, alternate channel and outlet stabilization BMPs are included in Attachment C as a quick reference tool for the on-site inspector in the event the BMP(s) listed above are deemed ineffective or inappropriate during construction to satisfy the requirements set forth in the CSWGP and the KMC. To avoid potential erosion and sediment control issues that may cause a violation(s) of the CSWGP or the KMC, the CESCL shall promptly initiate the implementation of one or more of the alternative BMPs listed in Attachment C after the first sign that existing BMPs are ineffective or failing.

The Project site is located west of the Cascade Mountain crest. As such, all temporary on-site conveyance facilities shall be designed, constructed, and stabilized to minimize erosion from the

expected peak flow from a Type 1A, 10-year, 24-hour recurrence interval storm for the developed condition. Alternatively, the 10-year, 1-hour peak flow rate indicated by an approved continuous runoff simulation model, increased by a factor of 1.6, shall be used. Stabilization, including armoring material, adequate to prevent erosion of outlets, adjacent streambanks, slopes, and downstream reaches shall be provided at the outlets of all conveyance systems.

3.1.9 Element 9 – Control Pollutants

All pollutants, including waste materials and demolition debris, that occur on site shall be handled and disposed of in a manner that does not cause contamination of stormwater. Good housekeeping and preventative measures shall be taken to ensure that the site shall be kept clean, well-organized, and free of debris. If required, BMPs noted below should be implemented to control specific sources of pollutants.

1. As per the federal regulations of the Clean Water Act, the KMC, and according to Final Rule 40 Code of Federal Regulations Part 112, a Spill Prevention, Control, and Countermeasure (SPCC) Plan is required for construction activities. The Contractor shall be responsible for preparing and maintaining an SPCC Plan per the requirements of the Contract Documents. This Plan shall list the City of Kirkland spill response hotline, (425) 587-3900, as the first point of contact and must include the following minimum requirements: All pollutants, including waste materials, demolition debris, and wash water, that occur on site shall be handled and disposed of in a manner that does not cause contamination of stormwater.
2. Cover, containment, and protection from vandalism shall be provided for all chemicals, liquid products, petroleum products, and non-inert wastes present on the site (see Washington Administrative Code Chapter 173-304 for the definition of inert waste). On-site fueling tanks shall include secondary containment.
3. Hazardous chemicals, such as cleaning agents and solvents, shall be stored in an approved chemical storage facility(ies), located in the equipment staging area. When using chemicals, care shall be taken to guard against spillage. In the event of a chemical release, the appropriate authorities shall be contacted, and the spill is to be cleaned up immediately.
4. All equipment shall be inspected regularly to detect any leaks or spills and to identify any necessary maintenance. Maintenance and repair of heavy equipment and vehicles involving oil changes, hydraulic system drain down, solvent and de-greasing cleaning operations, fuel tank drain down and removal, and other activities that may result in discharge or spillage of pollutants to the ground or into stormwater runoff must be conducted in a designated area using spill prevention measures, such as drip pans. Contaminated surfaces shall be cleaned immediately following any discharge or spill incident. Emergency repairs may be performed on site using temporary plastic placed beneath and, if raining, over the vehicle.

5. BMPs shall be used to prevent or treat contamination of stormwater runoff by pH-modifying sources. These sources include, but are not limited to, bulk cement, cement kiln dust, fly ash, new concrete washing and curing waters, waste streams generated from concrete grinding and sawing, exposed aggregate processes, and concrete pumping and mixer washout waters. Stormwater discharges shall not cause or contribute to a violation of the water quality standard for pH in the receiving water.

Concrete Handling

1. Concrete work can generate process water and slurry that contain fine particles and high pH, both of which can violate water quality standards in the receiving water. This BMP is intended to minimize and eliminate concrete process water and slurry from entering waters of the state.
2. Concrete truck chutes, pumps, and internals shall be washed out only into formed areas awaiting installation of concrete or asphalt.
3. Unused concrete remaining in the truck and pump shall be returned to the originating batch plant for recycling.
4. Hand tools including, but not limited to, screeds, shovels, rakes, floats, and trowels, shall be washed off only into formed areas awaiting installation of concrete or asphalt.
5. Equipment that cannot be easily moved, such as concrete pavers, shall only be washed in areas that do not directly drain to natural or constructed stormwater conveyances.
6. Washdown from areas such as concrete aggregate driveways shall not drain directly to natural or constructed stormwater conveyances.
7. When no formed areas are available, wash water and leftover product shall be contained in a lined container. Contained concrete shall be disposed of in a manner that does not violate groundwater or surface water quality standards.
8. Containers shall be checked for holes in the liner daily during concrete pours and repaired the same day.

Sawcutting and Surfacing Pollution Prevention

1. Sawcutting and surfacing operations generate slurry and process water that contains fine particles and high pH (concrete cutting), both of which can violate the water quality standards in the receiving water. This BMP is intended to minimize and eliminate process water and slurry from entering waters of the State.
2. Slurry and cuttings shall be vacuumed during cutting and surfacing operations.
3. Slurry and cuttings shall not remain on permanent concrete or asphalt pavement overnight.
4. Slurry and cuttings shall not drain to any natural or constructed drainage conveyance.

5. Collected slurry and cuttings shall be disposed of in a manner that does not violate groundwater or surface water quality standards.
6. Process water that is generated during hydro-demolition, surface roughening, or similar operations shall not drain to any natural or constructed drainage conveyance and shall be disposed of in a manner that does not violate groundwater or surface water quality standards.
7. Cleaning waste material and demolition debris shall be handled and disposed of in a manner that does not cause contamination of water. If the area is swept with a pick-up sweeper, the material must be hauled out of the area to an appropriate disposal site.
8. Continually monitor operations to determine whether slurry, cuttings, or process water could enter waters of the State. If inspections show that a violation of water quality standards could occur, stop operations and immediately implement preventive measures such as berms, barriers, secondary containment, and vacuum trucks.

Material Delivery, Storage and Containment

1. Prevent, reduce, or eliminate the discharge of pollutants from material delivery and storage to the stormwater system or watercourses by minimizing the storage of hazardous materials on site, storing materials in a designated area, and installing secondary containment.
2. Temporary storage areas should be located away from vehicular traffic, near the construction entrance(s), and away from waterways or storm drains.
3. Material Safety Data Sheets (MSDSs) should be supplied for all materials stored. Chemicals should be kept in their original labeled containers.
4. Hazardous material storage on site should be minimized.
5. Hazardous materials should be handled as infrequently as possible.
6. During the wet weather season (October 1 through April 30), consider storing materials in a covered area.
7. Materials should be stored in secondary containments, such as earthen dike, horse trough, or even a children's wading pool for non-reactive materials such as detergents, oil, grease, and paints. Small amounts of material may be secondarily contained in "bus boy" trays or concrete mixing trays.
8. Do not store chemicals, drums, or bagged materials directly on the ground. Place these items on a pallet and, when possible, in secondary containment.
9. If drums must be kept uncovered, store them at a slight angle to reduce ponding of rainwater on the lids to reduce corrosion. Domed plastic covers are inexpensive and snap to the top of drums, preventing water from collecting.

10. Liquids, petroleum products, and substances listed in 40 Code of Federal Regulations Parts 110, 117, or 302 shall be stored in approved containers and drums and shall not be overfilled. Containers and drums shall be stored in temporary secondary containment facilities.
11. Temporary secondary containment facilities shall provide for a spill containment volume able to contain precipitation from a 25-year, 24-hour storm event, plus 10% of the total enclosed container volume of all containers, or 110% of the capacity of the largest container within its boundary, whichever is greater.
12. Secondary containment facilities shall be impervious to the materials stored therein for a minimum contact time of 72 hours.
13. Secondary containment facilities shall be maintained free of accumulated rainwater and spills. In the event of spills or leaks, accumulated rainwater and spills shall be collected and placed into drums. These liquids shall be handled as hazardous waste unless testing determines them to be non-hazardous.
14. Sufficient separation should be provided between stored containers to allow for spill cleanup and emergency response access.
15. During the wet weather season (October 1 through April 30), each secondary containment facility shall be covered during non-working days, prior to and during rain events.
16. Keep material storage areas clean, organized, and equipped with an ample supply of appropriate spill cleanup material (spill kit). The spill kit should include the following, at a minimum:
    - 1 Water Resistant Nylon Bag
    - 3 Oil Absorbent Socks 3"x 4'
    - 2 Oil Absorbent Socks 3"x 10'
    - 12 Oil Absorbent Pads 17"x19"
    - 1 Pair Splash Resistant Goggles
    - 3 Pairs Nitrile Gloves
    - 10 Disposable Bags with Ties
    - Instructions

3.1.10 Element 10 – Control Dewatering

All dewatering water from open cut excavation, tunneling, foundation work, trench, or underground vaults shall be discharged into a controlled conveyance system prior to discharge to a sediment trap or sediment pond. Clean, non-turbid dewatering water shall not be routed through stormwater sediment ponds, and shall be dispersed or discharged to systems tributary to the receiving waters of the state in a manner that does not cause erosion, flooding, or a violation of state water quality standards in the receiving water. Highly turbid dewatering water from soils known or suspected to be contaminated, or from use of construction equipment, shall require additional monitoring and

treatment as required for the specific pollutants based on the receiving waters into which the discharge is occurring. Such monitoring is the responsibility of the Contractor. Dewatering of soils known to be free of contamination shall trigger BMPs to trap sediment and reduce turbidity.

3.1.11 Element 11 – Maintain BMPs

All temporary and permanent erosion and sediment control BMPs shall be maintained and repaired as needed to ensure continued performance of their intended function. Maintenance and repair shall be conducted in accordance with each particular BMP's specifications. Visual monitoring of the BMPs shall be conducted at least once every calendar week and within 24 hours of any rainfall event that causes a discharge from the site. If the site becomes inactive, and is temporarily stabilized, the inspection frequency shall be reduced to once every month.

All TESC BMPs shall be removed within 30 days after the final site stabilization is achieved or after the temporary BMPs are no longer needed. Trapped sediment shall be removed or stabilized on site. Disturbed soil resulting from removal of BMPs or vegetation shall be permanently stabilized.

3.1.12 Element 12 – Manage the Project

Erosion and sediment control BMPs for this Project have been designed based on the following principles:

- Design the Project to fit the existing topography, soils, and drainage patterns.
- Emphasize erosion control rather than sediment control.
- Minimize the extent and duration of the area exposed.
- Keep runoff velocities low.
- Retain sediment on site.
- Thoroughly monitor the site and maintain all erosion and sediment control measures.
- Schedule major earthwork, when possible, during dry weather.

Because this Project site is located west of the Cascade Mountain crest, the Project shall be managed according to the following key Project components:

Phasing of Construction

- The construction is being phased to the extent practicable in order to prevent soil erosion, and, to the maximum extent possible, the transport of sediment from the site during construction.
- Revegetation of exposed areas and maintenance of that vegetation shall be an integral part of the clearing activities during each phase of construction.

Seasonal Work Limitations

- It is anticipated that construction shall occur during the wet season, from October 1 through April 30. From October 1 through April 30, clearing, grading, and other soil-disturbing activities shall be permitted with the approval of the City of Kirkland. The Contractor shall demonstrate that potential for sediment-laden runoff to leave the site is minimized through a combination of the following:
  - Assess site conditions including existing vegetative coverage, slope, soil type, and proximity to receiving waters
  - Limitations on activities and the extent of disturbed areas
  - Proposed erosion and sediment control measures
- Based on the information provided and/or local weather conditions, the City of Kirkland may expand or restrict the seasonal limitation on site disturbance.
- The following activities are exempt from the seasonal clearing and grading limitations:
  - Routine maintenance and necessary repair of erosion and sediment control BMPs
  - Routine maintenance of public facilities or existing utility structures that does not expose the soil or result in the removal of the vegetative cover to soil
  - Activities where there is 100% infiltration of surface water runoff within the site in approved and installed erosion and sediment control facilities

Coordination with Utilities and Other Jurisdictions

- Care has been taken to coordinate with utilities, other construction projects, and the local jurisdiction in preparing this SWPPP and scheduling the construction work.

Inspection and Monitoring

- All BMPs shall be inspected, maintained, and repaired as needed to ensure continued performance of their intended function. Site inspections shall be conducted by a person who is knowledgeable in the principles and practices of erosion and sediment control. This person has the necessary skills to perform the following:
  - Assess the site conditions and construction activities that could impact the quality of stormwater.
  - Assess the effectiveness of erosion and sediment control measures used to control the quality of stormwater discharges.
  - A CESCL shall be on site or on call at all times when work is occurring at the site.
  - Whenever inspection and/or monitoring reveals that the BMPs identified in this SWPPP are inadequate, due to the actual discharge of or potential to discharge a significant amount of any pollutant, appropriate BMPs or design changes shall be implemented as soon as possible.

Maintaining an Updated Construction SWPPP

- This SWPPP shall be retained on site or within reasonable access to the site.
- The SWPPP shall be modified whenever there is a change in the design, construction, operation, or maintenance at the construction site that has, or could have, a significant effect on the discharge of pollutants to waters of the state.
- The SWPPP shall be modified if, during inspections or investigations conducted by the owner/operator, or the applicable local or state regulatory authority, it is determined that the SWPPP is ineffective in eliminating or significantly minimizing pollutants in stormwater discharges from the site. The SWPPP shall be modified as necessary to include additional or modified BMPs designed to correct problems identified. Revisions to the SWPPP shall be completed within 7 days following the inspection.

3.1.13 Element 13 – Protect Low Impact Development

The Project does not include any Low Impact Development BMPs designed to infiltrate runoff into underlying soils. The Project will include the following permanent stormwater control BMPs:

- All impervious surfaces will sheet flow and be fully dispersed to vegetated areas or will sheet flow directly to Lake Washington.

The sheet flow dispersion areas shall be protected during construction through the use of silt fences and inlet protection. The Contractor shall monitor these areas to ensure that erosion does not occur and to prevent sediment-laden water from discharging across these areas from non-stabilized surfaces. These BMPs shall be constructed later during construction when adjacent surfaces have been stabilized. Following construction of these facilities, runoff from adjacent non-stabilized surfaces shall be controlled so that sediment is not transported to these facilities until adjacent surfaces are fully stabilized.

3.2 Site-Specific BMPs

Site-specific BMPs are shown on the TESC Plan Sheets and Details in Attachment A. These site-specific plan sheets shall be updated as needed.

4 Construction Phasing and BMP Implementation

The BMP implementation schedule shall be driven by the construction schedule. Table 4-1 provides a sequential list of the proposed construction schedule milestones and the corresponding BMP implementation schedule. The list contains key milestones such as when wet season construction BMPS are required.

The BMP implementation schedule in Table 4-1 is keyed to proposed phases of construction, and it reflects differences in BMP installations and inspections that relate to wet season construction. The Project site is located west of the Cascade Mountain crest. As such, the dry season is considered to be from May 1 to September 30 and the wet season is considered to be from October 1 to April 30.

Table 4-1
BMP Implementation Schedule

Schedule Item	Approximate Date
Estimate of construction start date	July 1, 2021
Conduct pre-construction meeting	July 1, 2021
Mobilize equipment on site	July 8, 2021
Mobilize and store all TESC and soil stabilization products	July 8, 2021
Install drainage inlet protection	July 8, 2021
Install stabilized construction entrance	July 8, 2021
Install silt fences and other perimeter controls	July 8, 2021
Install temporary stormwater swales and sediment traps	July 8, 2021
Install in-water turbidity curtain	July 8, 2021
Install other TESC measures	July 8, 2021
Begin maintaining erosion and sediment control measures	July 15, 2021
Begin managing site to minimize soil disturbance	July 15, 2021
Begin clearing and grubbing	July 21, 2021
Begin demolition	July 21, 2021
Begin grading and earthwork	August 16, 2021
Begin implementing soil stabilization (wet season)	October 1, 2021
Stabilize all areas that reach final grade within 7 days	November 1, 2021
Seed or mulch areas to remain unworked more than 30 days	November 15, 2021
Complete permanent seeding, planting, and stabilization	December 15, 2021
Remove TESC BMPs	January 1, 2022

Note:
In-water work window is July 16 through March 15.

5 Pollution Prevention Team

5.1 Roles and Responsibilities

The pollution prevention team consists of personnel responsible for implementation of the SWPPP, including, but not limited to, the following:

- Contractor CESCL: Primary Contractor contact, responsible for site inspections (BMPs, visual monitoring, sampling, etc.); to be called upon in case of failure of any erosion and sediment control measures. The CESCL listed in this SWPPP aided in the development of the SWPPP; however, the Primary Contractor shall be responsible for taking over CESCL duties and shall manage erosion and sediment control during construction. Contractor representatives to be determined at time of award of City contract.
- Project Engineer: For projects with engineered structures only (sediment ponds/traps, sand filters, etc.). Site representative for the owner who is the project's supervising engineer responsible for inspections and issuing instructions and drawings to the Contractor's site supervisor or representative.
- Emergency Ecology Contact: In case of spills to water, contact the Washington Emergency Management Division, National Response Center, and Department of Ecology Northwest Regional Office.
- Emergency Owner Contact: The Emergency Owner Contact for this Project will be the City of Kirkland Spill Hotline.
- Non-Emergency Owner Contact: Individual who is the site owner or representative of the site owner to be contacted in the case of non-emergency situations. The Non-Emergency Owner Contact for this Project will be the Project Engineer.
- Non-Emergency Ecology Contact: Department of Ecology Northwest Regional Office.
- City of Kirkland Monitoring Personnel: City of Kirkland personnel responsible for conducting water quality monitoring.

5.2 Team Members

Names and contact information for those identified as members of the pollution prevention team are provided in Table 5-1.

Table 5-1
Pollution Prevention Team Contact Information

Title	Name(s)	Phone Number
Contractor Superintendent	Placeholder	Placeholder
Contractor CESCL	Placeholder	Placeholder
Contractor Emergency Contact	Placeholder	Placeholder
Contractor Non-Emergency Contact	Placeholder	Placeholder
Contractor Monitoring Personnel	Placeholder	Placeholder
Project Engineer	Brian Baker, Project Engineer	425-587-3827
Spill Hotlines	Washington Emergency Management Division National Response Center	800-258-5990 800-424-8802
Emergency Owner Contact	City of Kirkland Spill Hotline	425-587-3900
Non-Emergency Ecology Contact	Northwest Regional Office	425-649-7000
City of Kirkland Monitoring Personnel	Place Holder	Placeholder

6 Monitoring and Sampling Requirements

Monitoring includes visual inspection, monitoring for water quality parameters of concern, and documentation of the inspection and monitoring findings in a site log book. A site log book shall be maintained for all on-site construction activities and shall include the following:

- A record of the implementation of the SWPPP and other permit requirements
- Site inspections
- Stormwater quality monitoring

For convenience, the inspection form and water quality monitoring forms included in Attachment D of this SWPPP include the required information for the site log book. This SWPPP may function as the site log book if desired, or the forms may be separated and included in a separate site log book. However, if separated, the site log book must be maintained on site or within reasonable access to the site and be made available upon request to Ecology or the local jurisdiction.

6.1 Site Inspection

All BMPs shall be inspected, maintained, and repaired as needed to ensure continued performance of their intended function. The inspector shall be a CESCL. The name and contact information for the CESCL shall be provided, or updated, as needed, in Section 5 of this SWPPP.

Site inspection shall occur in all areas disturbed by construction activities, at all stormwater discharge points, and along the entire perimeter of the in-water turbidity curtain. Stormwater shall be reviewed for the presence of suspended sediment, turbidity, discoloration, and oily sheen. The site inspector shall evaluate and document the effectiveness of the installed BMPs and determine if it is necessary to repair or replace any of the BMPs to improve the quality of stormwater discharges. All maintenance and repairs shall be documented in the site log book or forms provided in this document. All new BMPs or design changes shall be documented in the SWPPP as soon as possible.

6.1.1 Site Inspection Frequency

Site inspections shall be conducted at least once a week and within 24 hours following a significant storm event or any increase in discharge from the site.

6.1.2 Site Inspection Documentation

The site inspector shall record each site inspection using the site log inspection forms provided in Attachment D. The site inspection log forms may be separated from this SWPPP document, but shall be maintained on site or within reasonable access to the site and be made available upon request to Ecology or the local jurisdiction.

6.2 Stormwater Quality Monitoring

The Project has specific water quality requirements because the site discharges to a water body listed as impaired under Section 303(d) of the Clean Water Act. The following text describes the site-specific monitoring for the Project.

6.2.1 Turbidity Sampling

Monitoring requirements for the Project shall include either turbidity or water transparency sampling to monitor site discharges for water quality compliance with the CSWGP and the KMC. Sampling shall be conducted at all discharge points at least once per calendar week and within 24 hours following any discharge from the site.

Turbidity or transparency monitoring shall follow the analytical methodologies described in Section S4 of the CSWGP and as required by other permit approvals. The key benchmark values that require action are 25 nephelometric turbidity units (NTU) for turbidity (equivalent to 32 centimeters [cm] transparency) and 250 NTU for turbidity (equivalent to 6 cm transparency). If the 25 NTU benchmark for turbidity (equivalent to 32 cm transparency) is exceeded, the following steps shall be conducted:

- Ensure all BMPs specified in this SWPPP are installed and functioning as intended.
- Assess whether additional BMPs should be implemented, and document revisions to the SWPPP as necessary.
- Sample discharge location daily until the analysis results are less than 25 NTU (turbidity) or greater than 32 cm (transparency).

If the turbidity is greater than 25 NTU (or transparency is less than 32 cm) but less than 250 NTU (transparency greater than 6 cm) for more than 3 days, additional treatment BMPs shall be implemented within 24 hours of the third consecutive sample that exceeded the benchmark value. Additional treatment BMPs to be considered shall include, but are not limited to, off-site treatment, filtration, and chemical treatment.

If the 250 NTU benchmark for turbidity (or less than 6 cm transparency) is exceeded at any time, the following steps shall be conducted:

1. Notify Ecology by phone within 24 hours of analysis (see Section 5 of this SWPPP for contact information).
2. Continue daily sampling until the turbidity is less than 25 NTU (or transparency is greater than 32 cm).
3. Initiate additional treatment BMPs such as off-site treatment, infiltration, filtration, and chemical treatment within 24 hours of the first 250-NTU exceedance.

4. Implement additional treatment BMPs as soon as possible, but within 7 days of the first 250-NTU exceedance.
5. Describe inspection results and remedial actions taken in the site log book and in monthly discharge monitoring reports as described in Section 8 of this SWPPP.

6.2.2 pH Sampling

Stormwater runoff shall be monitored for pH starting on the first day of any activity that includes more than 40 yards of poured or recycled concrete, or after the application of "engineered soils" such as Portland cement treated base, cement kiln dust, or fly ash. This does not include fertilizers. For concrete work, pH monitoring shall start the first day concrete is poured and continue until 3 weeks after the last pour. For engineered soils, the pH monitoring period begins when engineered soils are first exposed to precipitation and continues until the area is fully stabilized.

Stormwater samples shall be collected daily from all points of discharge from the site and measured for pH using a calibrated pH meter, pH test kit, or wide-range pH indicator paper. If the measured pH is 8.5 or greater, the following steps shall be conducted:

1. Prevent the high pH water from entering storm drains or surface water.
2. Adjust or neutralize the high pH water if necessary, using appropriate technology such as carbon dioxide (CO_2) sparging (liquid or dry ice).
3. Contact Ecology if chemical treatment other than CO_2 sparging is planned.

7 Discharges to 303(d) or Total Maximum Daily Load Waterbodies

7.1 303(d) Listed Waterbodies

Is the receiving water 303(d) (Category 5) listed for turbidity, fine sediment, phosphorus, or pH?

☒ Yes ☐ No

List the impairment(s):

- Lake Washington at Project site is currently listed as Category 5 for bacteria.

If yes, discharges must comply with applicable effluent limitations in S8.C and S8.D of the CSWGP.

303(d) listing information is included in Appendix E.

7.2 TMDL Waterbodies

Waste Load Allocation for CWSGP discharges:

- N/A

Describe the method(s) for TMDL compliance:

- N/A

List and describe BMPs:

- N/A

8 Recordkeeping and Reporting

8.1 Recordkeeping

8.1.1 Site Log Book

A site log book shall be maintained for all on-site construction activities and shall include the following:

- A record of the implementation of the SWPPP and other permit requirements
- Site inspections
- Stormwater quality monitoring

For convenience, the inspection form and water quality monitoring forms included in Attachment D of this SWPPP include the required information for the site log book.

8.1.2 Records Retention

Records of all monitoring information (site log book, inspection reports/checklists, etc.), this SWPPP, and any other documentation of compliance with permit requirements shall be retained during the life of the construction project and for a minimum of 3 years following the termination of permit coverage in accordance with CSWGP condition S5.C and the KMC.

8.1.3 Access to Plans and Records

The SWPPP, Notice of Authorization letter, and site log book shall be retained on site or within reasonable access to the site and shall be made immediately available upon request to Ecology or the local jurisdiction. A copy of this SWPPP shall be provided to Ecology within 14 days of receipt of a written request for the SWPPP from Ecology. Any other information requested by Ecology shall be submitted within a reasonable time. A copy of the SWPPP or access to the SWPPP shall be provided to the public when requested in writing in accordance with the CSWGP.

8.1.4 Updating the SWPPP

In accordance with conditions S3, S4.B, and S9.B.3 of the CSWGP and the KMC, this SWPPP shall be modified if the SWPPP is ineffective in eliminating or significantly minimizing pollutants in stormwater discharges from the site or there has been a change in design, construction, operation, or maintenance at the site that has a significant effect on the discharge, or potential for discharge, of pollutants to waters of the state. The SWPPP shall be modified within 7 days of determination based on inspection(s) that additional or modified BMPs are necessary to correct problems identified, and an updated timeline for BMP implementation shall be prepared.

8.2 Reporting

8.2.1 Discharge Monitoring Reports

Discharge Monitoring Reports (DMRs) shall be submitted to the City Project Engineer monthly. If there was no discharge during a given monitoring period, the Permittee shall submit the form as required, with the words "No discharge" entered in the place of monitoring results. The DMR due date is 15 days following the end of each month.

8.2.2 Notification of Noncompliance

If any actions result in a threat to human health or the environment, the following steps shall be taken:

1. The City Project Engineer shall be immediately notified of the failure to comply.
2. Immediate action shall be taken to control the noncompliance issue and to correct the problem. If applicable, sampling and analysis of any noncompliance shall be repeated immediately and the results submitted to the City Project Engineer within 5 days of becoming aware of the violation.
3. A detailed written report describing the noncompliance shall be submitted to the City Project Engineer within 5 days, unless requested earlier.

9 References

AESI (Associated Earth Sciences, Inc.), 2014. *Kirkland Parks Shoreline Structures Assessment.* Prepared for City of Kirkland Parks and Community Services Department. January 9, 2014.

Attachment A
Exhibits and TESC Plans

K:\Projects\1006-City of Kirkland\David Brink Park Shoreline Renovation\Drainage Report Figures\1006-RP-001-DavidBrinkParkVicinityMap.dwg F1

Feb 14, 2020 2:35pm jsexton

AERIAL SOURCE: Bing Maps.
HORIZONTAL DATUM: Washington State Plane North, NAD83, U.S. Feet.

0 1500
Scale in Feet

ANCHOR QEA

Exhibit 1
Location Map
David Brink Park Shoreline Renovation Construction SWPPP
City of Kirkland

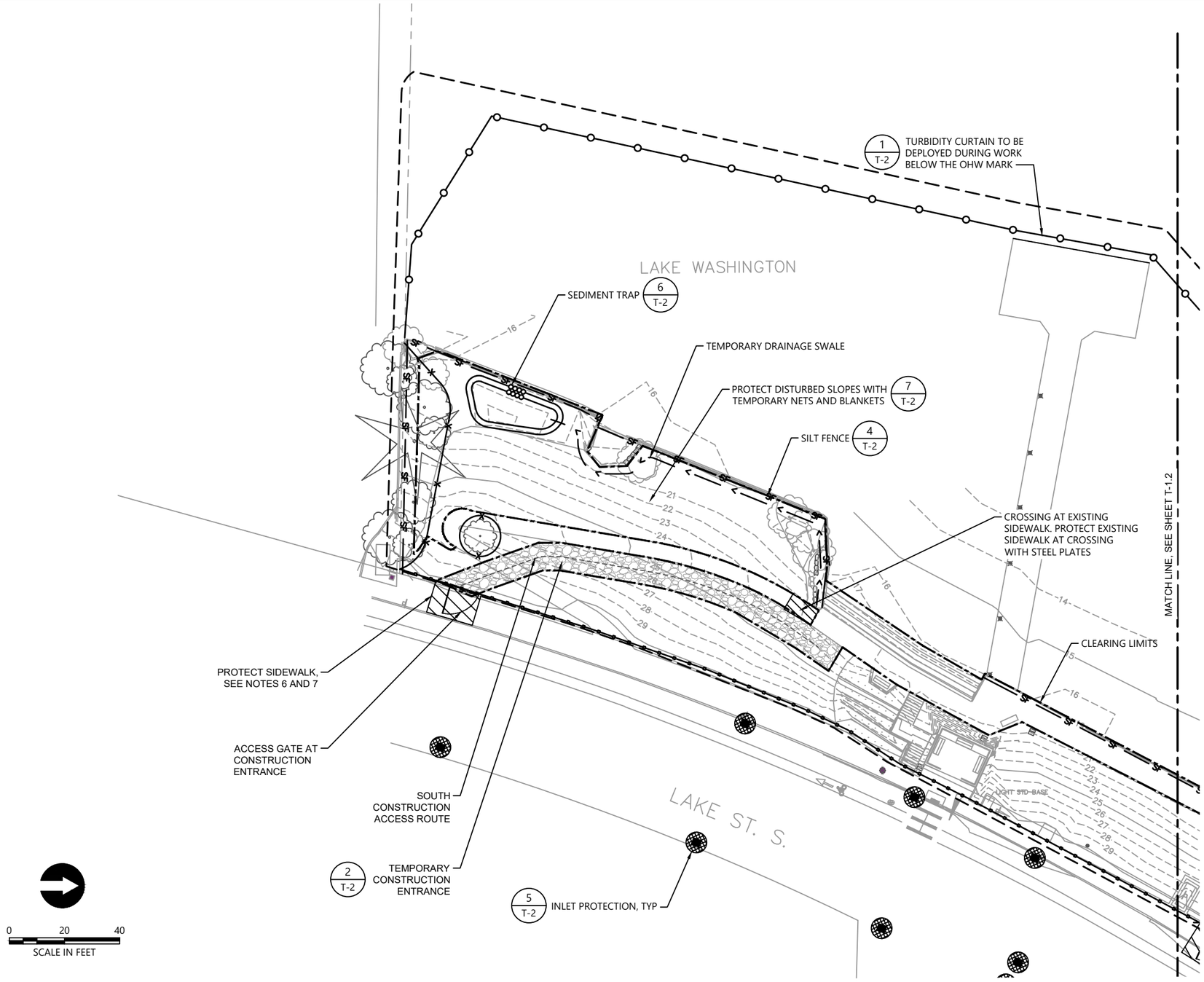

LEGEND:

- PARK BOUNDARY
- PROJECT LIMITS
- EXISTING CONTOUR
- EXISTING ORDINARY HIGH WATER MARK (OHWM)
- EXISTING ORDINARY LOW WATER MARK (OLWM)
- EXISTING ROCK BULKHEAD TO REMAIN
- PROTECT EXISTING TREES TO REMAIN
- TREE PROTECTION FENCING 3 T-2
- ACCESS GATE
- IN-WATER TURBIDITY CURTAIN SEE NOTE 5 1 T-2
- CLEARING, GRADING, AND DISTURBANCE LIMITS
- TEMPORARY CONSTRUCTION ENTRANCE 2 T-2
- SILT FENCE 4 T-2
- INLET PROTECTION 5 T-2
- TEMPORARY CONSTRUCTION FENCING
- TEMPORARY DRAINAGE SWALE
- SEDIMENT TRAP 6 T-2

NOTES:

1. HORIZONTAL DATUM: WASHINGTON STATE PLANE NORTH ZONE, NORTH AMERICAN DATUM OF 1983 (NAD83), U.S. SURVEY FEET
2. VERTICAL DATUM: NAVD 88
3. SURVEY PROVIDED BY STANTEC, INC IN MARCH 2019
4. SEE SHEET T-3 FOR TESC NOTES
5. TURBIDITY CURTAIN ALIGNMENT IS DIAGRAMMATIC. CONTRACTOR TO DEPLOY AND MAINTAIN A TURBIDITY CURTAIN AROUND WORK AREAS TO FULFILL ENVIRONMENTAL PERMIT CONDITIONS
6. THE CONTRACTOR SHALL PROTECT THE EXISTING SIDEWALK AT TEMPORARY CONSTRUCTION ACCESS LOCATIONS AND MAINTAIN SAFE PEDESTRIAN ACCESS ALONG THE SIDEWALK THROUGHOUT THE CONSTRUCTION PERIOD. THE CONTRACTOR SHALL USE STEEL PLATES, TIMBER MATS, OR ANOTHER APPROVED METHOD TO PROTECT THE SIDEWALK FROM DAMAGE AT TEMPORARY CONSTRUCTION ACCESS LOCATIONS.
7. THE CONTRACTOR SHALL BE RESPONSIBLE FOR REPAIR OF ANY DAMAGE TO THE CURB, GUTTER, SIDEWALK, OR THE INFRASTRUCTURE IN THE LAKE STREET RIGHT-OF-WAY CAUSED BY THE WORK.

ONE INCH
AT FULL SIZE, IF NOT ONE INCH SCALE ACCORDINGLY

90% DESIGN SUBMITTAL
NOT FOR CONSTRUCTION

ANCHOR QEA

CITY OF KIRKLAND WASHINGTON

123 Fifth Ave
Kirkland, WA 98033
(425) 587-3300

REVISIONS

REV	DATE	BY	APP'D	DESCRIPTION

DESIGNED BY: J. SEXTON
DRAWN BY: C. WEE/C. HEWETT
CHECKED BY: P. HUMMEL
APPROVED BY: P. HUMMEL
SCALE: AS SHOWN
DATE: JUNE 2020

DAVID E. BRINK PARK SHORELINE RENOVATION

TEMPORARY EROSION AND STORMWATER CONTROL (TESC) PLAN - SOUTH

T-1.1

SHEET # 6 OF 37

K:\Projects\1006-City of Kirkland\David Brink Park Shoreline Renovation\Construction Plans\1006-PL-TESC.dwg T-1.1 TESC PLAN
Jul 08, 2020 3:21pm cwee

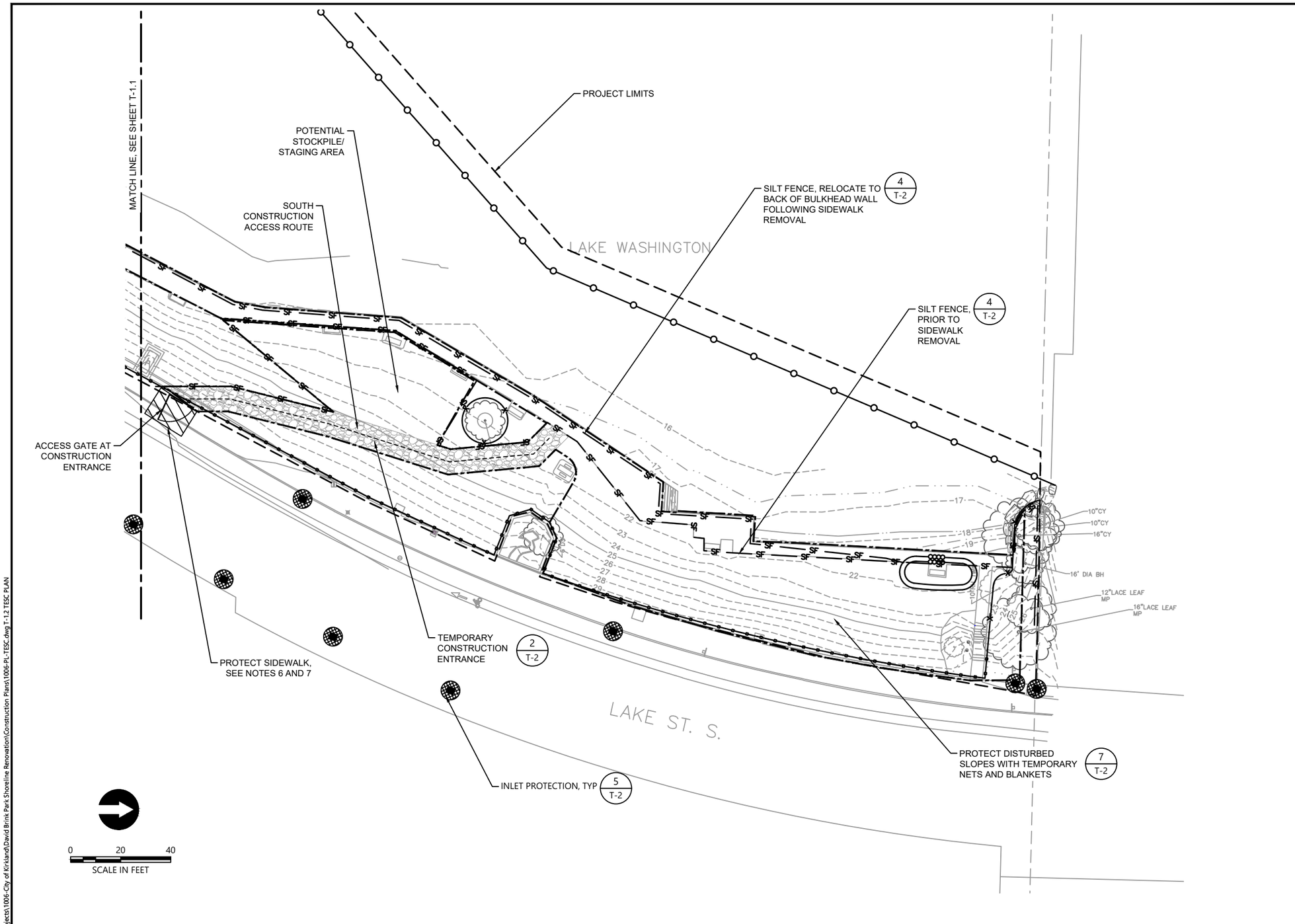

LEGEND:

- PROJECT LIMITS
- PROPERTY BOUNDARY
- CLEARING, GRADING, AND DISTURBANCE LIMITS
- EXISTING OHWM
- EXISTING OLWM
- EXISTING MAJOR CONTOUR
- EXISTING MINOR CONTOUR
- EXISTING TREE
- EXISTING STORM SEWER
- EXISTING ROCK BULKHEAD
- IN-WATER TURBIDITY CURTAIN 1 T-2
- TEMPORARY CONSTRUCTION ENTRANCE 2 T-2
- SILT FENCE 3 T-2
- INLET PROTECTION 4 T-2
- TEMPORARY DRAINAGE SWALE
- SEDIMENT TRAP 6 T-2

NOTES:

1. HORIZONTAL DATUM: WASHINGTON STATE PLANE NORTH ZONE, NORTH AMERICAN DATUM OF 1983 (NAD83), U.S. SURVEY FEET
2. VERTICAL DATUM: NAVD 88
3. SURVEY PROVIDED BY STANTEC, INC IN MARCH 2019
4. SEE SHEET T-3 FOR TESC NOTES
5. TURBIDITY CURTAIN ALIGNMENT IS DIAGRAMMATIC. CONTRACTOR TO DEPLOY AND MAINTAIN A TURBIDITY CURTAIN AROUND WORK AREAS TO FULFILL ENVIRONMENTAL PERMIT CONDITIONS
6. THE CONTRACTOR SHALL PROTECT THE EXISTING SIDEWALK AT TEMPORARY CONSTRUCTION ACCESS LOCATIONS AND MAINTAIN SAFE PEDESTRIAN ACCESS ALONG THE SIDEWALK THROUGHOUT THE CONSTRUCTION PERIOD. THE CONTRACTOR SHALL USE STEEL PLATES, TIMBER MATS, OR ANOTHER APPROVED METHOD TO PROTECT THE SIDEWALK FROM DAMAGE AT TEMPORARY CONSTRUCTION ACCESS LOCATIONS.
7. THE CONTRACTOR SHALL BE RESPONSIBLE FOR REPAIR OF ANY DAMAGE TO THE CURB, GUTTER, SIDEWALK, OR THE INFRASTRUCTURE IN THE LAKE STREET RIGHT-OF-WAY CAUSED BY THE WORK.

ONE INCH
AT FULL SIZE, IF NOT ONE INCH SCALE ACCORDINGLY

90% DESIGN SUBMITTAL
NOT FOR CONSTRUCTION

K:\Projects\1006-City of Kirkland\David Brink Park Shoreline Renovation\Construction Plans\1006-PL-TESC.dwg T-1.2 TESC PLAN
Jul 08, 2020 3:21pm cwee

ANCHOR QEA

CITY OF KIRKLAND WASHINGTON

123 Fifth Ave
Kirkland, WA 98033
(425) 587-3300

REVISIONS

REV	DATE	BY	APP'D	DESCRIPTION

DESIGNED BY: I. LASTNAME
DRAWN BY: C. WEE/C. HEWETT
CHECKED BY: P. HUMMEL
APPROVED BY: P. HUMMEL
SCALE: AS SHOWN
DATE: JUNE 2020

DAVID E. BRINK PARK SHORELINE RENOVATION

TEMPORARY EROSION AND STORMWATER CONTROL (TESC) PLAN - NORTH

T-1.2

SHEET # 7 OF 37

Attachment B
Construction BMPs

Significant sources of upstream surface water that drain onto disturbed areas shall be intercepted and conveyed to a stabilized discharge point downstream of the disturbed areas. Surface water collection measures shall be installed concurrently with or immediately following rough grading and shall be designed, constructed, and stabilized as needed to minimize erosion.

7. **Dewatering Control:** The water resulting from construction site de-watering activities must be treated prior to discharge or disposed of as specified.

8. **Dust Control:** Preventative measures to minimize wind transport of soil shall be implemented when a traffic hazard may be created or when sediment transported by wind is likely to be deposited in water resources.

9. **Flow Control:** Surface water from disturbed areas must be routed through the project's onsite flow control facility or other provisions must be made to prevent increases in the existing site conditions 2-year and 10-year runoff peaks discharging from the project site during construction (flow control BMP areas (existing or proposed) shall not be used for this purpose).

10. **Control Pollutants:** Stormwater pollution prevention (SWPPS) measures are required to prevent, reduce, or eliminate the discharge of pollutants to onsite or adjacent stormwater systems or watercourses from construction-related activities such as materials delivery and storage, onsite equipment fueling and maintenance, demolition of existing buildings and disposition of demolition materials and other waste, and concrete handling, washout and disposal. Section D.2.2 describes BMPs specific to this purpose; additionally, several of the ESC BMPs described herein are applicable.

11. **Protect Existing and Proposed Flow Control BMPs:** Sedimentation and soil compaction reduce the infiltration capacity of native and engineered soils. Protection measures shall be applied/installed and maintained so as to prevent adverse impacts to existing flow control BMPs and areas of proposed flow control BMPs for the project. Adverse impacts can prompt the requirement to restore or replace affected BMPs.

12. **Maintain BMPs:** Protection measures shall be maintained to assure continued performance of their intended function, to prevent adverse impacts to existing flow control BMPs and areas of proposed flow control BMPs, and protect other disturbed areas of the project.

13. **Manage the Project:** Coordination and timing of site development activities relative to ESC concerns, and timely inspection, maintenance and update of protective measures are necessary to effectively manage the project and assure the success of protective ESC and SWPPS design and implementation.

D.2.1.1 CLEARING LIMITS

Prior to any site clearing or grading, those areas that are to remain undisturbed during project construction shall be delineated. At a minimum, clearing limits shall be installed at the edges of all critical area buffers and any other areas required to be left uncleared such as portions of the site subject to clearing limits under KCC 16.82.150, areas around significant trees identified to be retained, flow control BMP areas to be protected, and other areas identified to be left undisturbed to protect sensitive features.

Purpose: The purpose of clearing limits is to prevent disturbance of those areas of the project site that are not designated for clearing or grading. This is important because limiting site disturbance is the single most effective method for reducing erosion. Clearing limits may also be used to control construction traffic, thus reducing the disturbance of soil and limiting the amount of sediment tracked off site.

When to Install: Clearing limits shall be installed prior to the clearing and/or grading of the site.

Measures to Use: Marking clearing limits by delineating the site with a continuous length of brightly colored survey tape is sometimes sufficient. The tape may be supported by vegetation or stakes, and it shall be 3 to 6 feet high and highly visible. Critical areas and their buffers require more substantial protection and shall be delineated with plastic or metal safety fences or stake and wire fences. Fencing may be required at the County's discretion to control construction traffic or at any location where greater

protection is warranted. Permanent fencing may also be used if desired by the applicant. Silt fence, in combination with survey flagging, is also an acceptable method of marking critical areas and their buffers.

D.2.1.1.1 PLASTIC OR METAL FENCE

Code: FE Symbol:

Purpose

Fencing is intended to (1) restrict clearing to approved limits; (2) prevent disturbance of critical areas, their buffers, and other areas required to be left undisturbed; (3) limit construction traffic to designated construction entrances or roads; and (4) protect areas where marking with survey tape may not provide adequate protection.

Conditions of Use

To establish clearing limits, plastic or metal fence may be used:

1. At the boundary of critical areas, their buffers, and other areas required to be left uncleared.
2. As necessary to control vehicle access to and on the site (see Sections D.2.1.4.1 and D.2.1.4.2).

Design and Installation Specifications

1. The fence shall be designed and installed according to the manufacturer's specifications.
2. The fence shall be at least 3 feet high and must be highly visible.
3. The fence shall not be wired or stapled to trees.

Maintenance Requirements

1. If the fence has been damaged or visibility reduced, it shall be repaired or replaced immediately and visibility restored.
2. Disturbance of a critical area, critical area buffer, native growth retention area, or any other area required to be left undisturbed shall be reported to the County for resolution.

D.2.1.2 COVER MEASURES

Temporary and permanent cover measures shall be provided to protect all disturbed areas, including the faces of cut and fill slopes. Temporary cover shall be installed if an area is to remain unworked for more than seven days during the dry season (May 1 to September 30) or for more than two consecutive working days during the wet season (October 1 to April 30). These time limits may be relaxed if an area poses a low risk of erosion due to soil type, slope gradient, anticipated weather conditions, or other factors. Conversely, the County may reduce these time limits if site conditions warrant greater protection (e.g., adjacent to significant aquatic resources or highly erosive soils) or if significant precipitation (see Section D.2.4.2) is expected. Any area to remain unworked for more than 30 days shall be seeded or sodded, unless the County determines that winter weather makes vegetation establishment infeasible. During the wet season, slopes and stockpiles at 3H:1V or steeper and with more than ten feet of vertical relief shall be covered if they are to remain unworked for more than 12 hours. Also during the wet season, the material necessary to cover all disturbed areas must be stockpiled on site. The intent of these cover requirements is to have as much area as possible covered during any period of precipitation.

Purpose: The purpose of covering exposed soils is to prevent erosion, thus reducing reliance on less effective methods that remove sediment after it is entrained in runoff. Cover is the only practical method of reducing turbidity in runoff. Structural measures, such as silt fences and sediment ponds, are only capable of removing coarse particles and in most circumstances have little to no effect on turbidity.

LAST REVISED:01/15/14

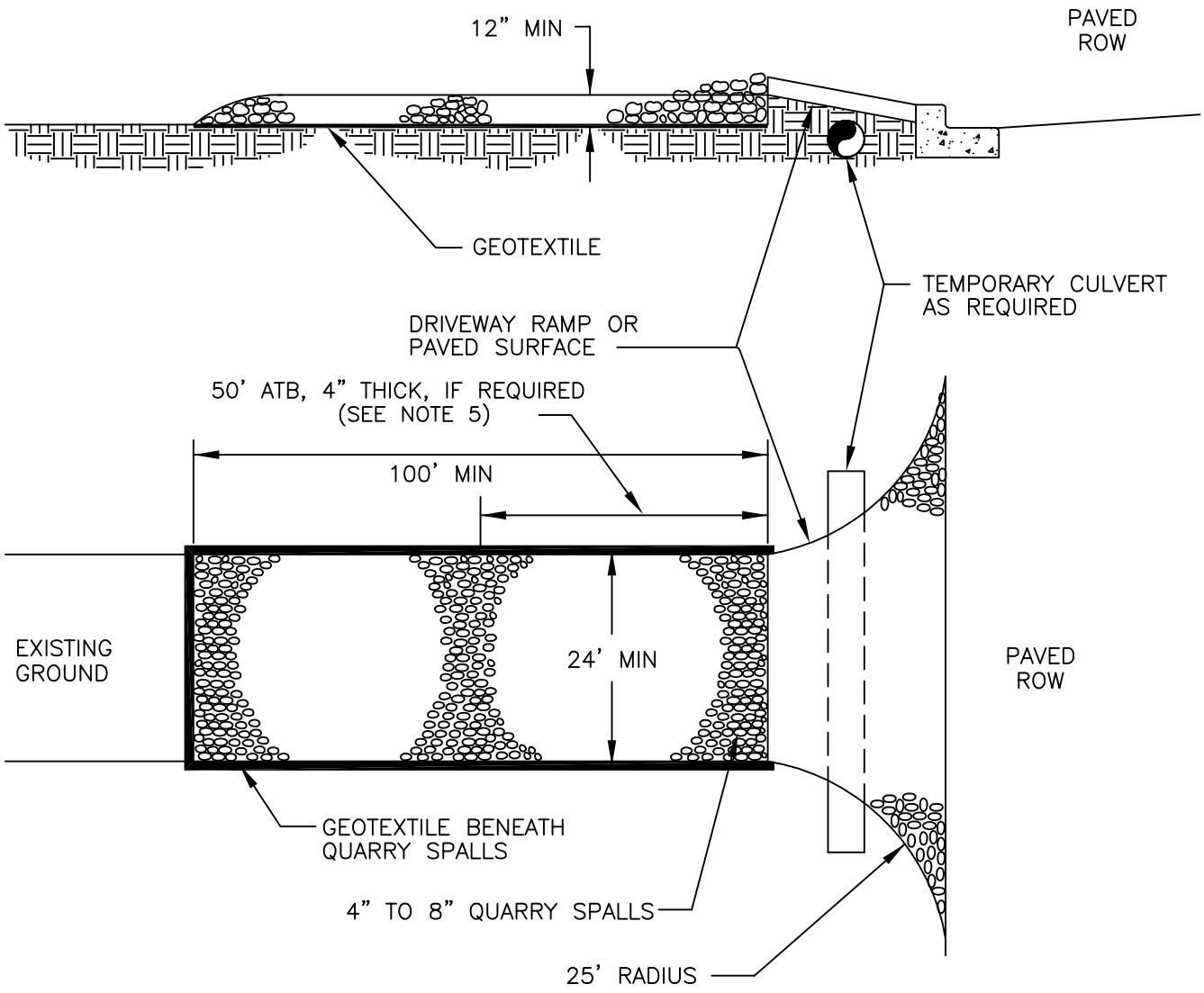

PLAT/COMMERCIAL

NOTES

1. PAD SHALL BE REMOVED AND REPLACED WHEN SOIL IS EVIDENT ON THE SURFACE OF THE PAD OR AS DIRECTED BY THE CITY CLEARING AND GRADING INSPECTOR.
2. PAD SHALL BE INSTALLED IN PLANTING STRIP AS APPROPRIATE.
3. PAD THICKNESS SHALL BE INCREASED IF SOIL CONDITIONS DICTATE AND/OR PER THE DIRECTION OF THE CITY CLEARING AND GRADING INSPECTOR.
4. CONTRACTOR RESPONSIBLE FOR CURB & GUTTER CONDITION.
5. ATB MAY BE REQUIRED PER PW INSPECTOR.
6. RECYCLED CONCRETE SHALL NOT BE USED FOR THE CONSTRUCTION ENTRANCE DUE TO HIGH LEVELS OF PH.

CITY OF KIRKLAND	
PLAN NO. CK-E.02	
CITY OF KIRKLAND WASHINGTON	TEMPORARY PLAT/COMMERCIAL CONST. ENTRANCE

LAST REVISED:04/15/12

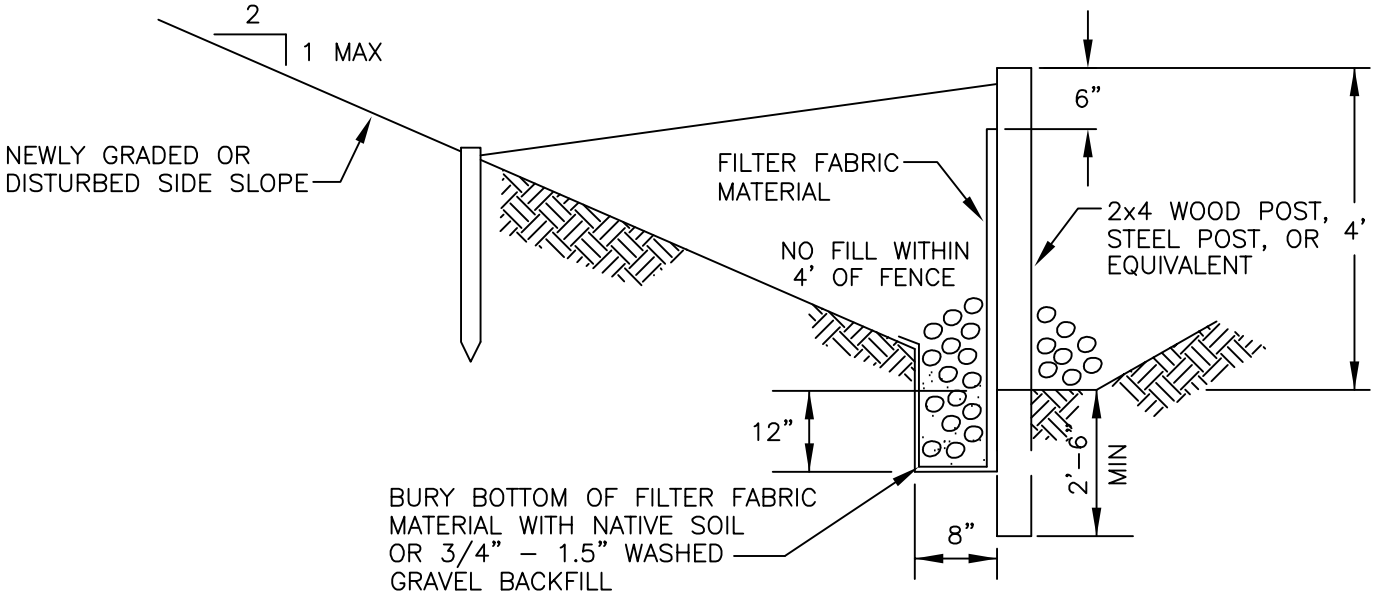

TYPICAL CROSS SECTION

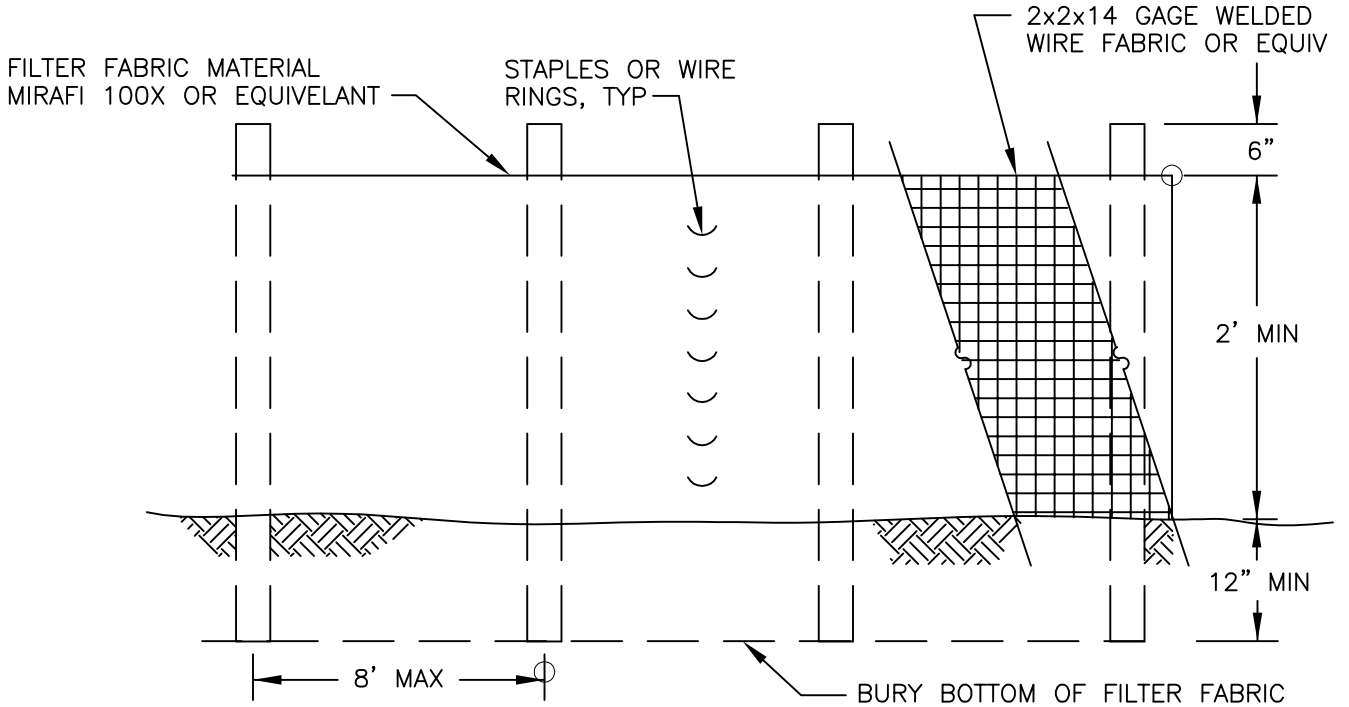

ELEVATION

NOTES

1. PREFAB FENCE ALLOWED IF REINFORCED AND APPROVED BY CITY INSPECTOR.
2. FENCE SHALL NOT BE INSTALLED ON SLOPES STEEPER THAN 2:1.
3. JOINTS IN FILTER FABRIC SHALL BE OVERLAPPED 6 INCHES AT POST.
4. USE STAPLES, WIRE RINGS, OR EQUIVALENT TO ATTACH FABRIC TO FENCE.
5. REMOVE SEDIMENT WHEN IT REACHES 1/3 FENCE HEIGHT.
6. LOCATION OF FENCING SHALL BE AS SHOWN ON APPROVED PLANS OR AS DIRECTED BY THE CITY.
7. MAXIMUM 100' SHEET OR OVERLAND FLOW PATH LENGTH TO SILT FENCE.
8. DO NOT DIRECT FLOWS GREATER THAN 0.5 CFS TO FENCE.
9. SILT FENCE SHOULD NOT BE INSTALLED IN STREAMS OR V-SHAPED DITCHES.

CITY OF KIRKLAND	
PLAN NO. CK-E.03	
CITY OF KIRKLAND WASHINGTON	SILT FENCE

D.2.1.2.6 TEMPORARY AND PERMANENT SEEDING

Code: SE Symbol:

Purpose

Seeding is intended to reduce erosion by stabilizing exposed soils. A well-established vegetative cover is one of the most effective methods of reducing erosion.

Conditions of Use

1. Seeding shall be used throughout the project on **disturbed areas** that have reached final grade or that will remain unworked for more than 30 days.
2. **Vegetation-lined channels** shall be seeded. Channels that will be vegetated should be installed before major earthwork and hydroseeded or covered with a Bonded Fiber Matrix (BFM).
3. **Retention/detention ponds** shall be seeded as required.
4. At the County's discretion, seeding without mulch during the **dry season** is allowed even though it will take more than seven days to develop an effective cover. Mulch is, however, recommended at all times because it protects seeds from heat, moisture loss, and transport due to runoff.
5. At the beginning of the **wet season**, all disturbed areas shall be reviewed to identify which ones can be seeded in preparation for the winter rains (see Section D.2.4.2). Disturbed areas shall be seeded within one week of the beginning of the wet season. A sketch map of those areas to be seeded and those areas to remain uncovered shall be submitted to the DPER inspector. The DPER inspector may require seeding of additional areas in order to protect surface waters, adjacent properties, or drainage facilities.
6. At final site stabilization, all disturbed areas not otherwise vegetated or stabilized shall be seeded and mulched (see Section D.2.4.5).

Design and Installation Specifications

1. The best **time to seed** is April 1 through June 30, and September 1 through October 15. Areas may be seeded between July 1 and August 31, but irrigation may be required in order to grow adequate cover. Areas may also be seeded during the winter months, but it may take several months to develop a dense groundcover due to cold temperatures. The application and maintenance of mulch is critical for winter seeding.
2. To prevent seed from being washed away, confirm that **all required surface water control measures** have been installed.
3. The **seedbed** should be firm but not compacted because soils that are well compacted will not vegetate as quickly or thoroughly. Slopes steeper than 3H:1V shall be surface roughened. Roughening can be accomplished in a variety of ways, but the typical method is track walking, or driving a crawling tractor up and down the slope, leaving cleat imprints parallel to the slope contours.
4. In general, 10-20-20 N-P-K (nitrogen-phosphorus-potassium) **fertilizer** may be used at a rate of 90 pounds per acre. Slow-release fertilizers are preferred because they are more efficient and have fewer environmental impacts. It is recommended that areas being seeded for final landscaping conduct soil tests to determine the exact type and quantity of fertilizer needed. This will prevent the over-application of fertilizer. Disturbed areas within 200 feet of water bodies and wetlands must use slow-release low-phosphorus fertilizer (typical proportions 3-1-2 N-P-K).
5. The following requirements apply to **mulching**:
   a) Mulch is always required for seeding slopes greater than 3H:1V (see Section D.2.1.2.2).

b) If seeding during the wet season, mulch is required.

c) The use of mulch may be required during the dry season at the County's discretion if grass growth is expected to be slow, the soils are highly erodible due to soil type or gradient, there is a water body close to the disturbed area, or significant precipitation (see Section D.2.4.2) is anticipated before the grass will provide effective cover.

d) Mulch may be applied on top of the seed or simultaneously by hydroseeding.

6. **Hydroseeding** is allowed as long as tackifier is included. Hydroseeding with wood fiber mulch is adequate during the dry season. During the wet season, the application rate shall be doubled because the mulch and tackifier used in hydroseeding break down fairly rapidly. It may be necessary in some applications to include straw with the wood fiber, but this can be detrimental to germination.

7. Areas to be permanently landscaped shall use **soil amendments**. Good quality topsoil shall be tilled into the top six inches to reduce the need for fertilizer and improve the overall soil quality. Most native soils will require the addition of four inches of well-rotted compost to be tilled into the soil to provide a good quality topsoil. Compost used should meet specifications provided in Reference 11-C of the *SWDM*.

8. The **seed mixes** listed below include recommended mixes for both temporary and permanent seeding. These mixes, with the exception of the wetland mix, shall be applied at a rate of 120 pounds per acre. This rate may be reduced if soil amendments or slow-release fertilizers are used. Local suppliers should be consulted for their recommendations because the appropriate mix depends on a variety of factors, including exposure, soil type, slope, and expected foot traffic. Alternative seed mixes approved by the County may be used.

Table D.2.1.2.B presents the standard mix for those areas where just a temporary vegetative cover is required.

TABLE D.2.1.2.B TEMPORARY EROSION CONTROL SEED MIX

	% Weight	% Purity	% Germination
Chewings or red fescue *Festuca rubra var. commutata* or *Festuca rubra*	40	98	90
Annual or perennial rye *Lolium multiflorum* or *Lolium perenne*	40	98	90
Redtop or colonial bentgrass *Agrostis alba* or *Agrostis tenuis*	10	92	85
White dutch clover *Trifolium repens*	10	98	90

Table D.2.1.2.C provides just one recommended possibility for landscaping seed.

TABLE D.2.1.2.C LANDSCAPING SEED MIX			
	% Weight	**% Purity**	**% Germination**
Perennial rye blend *Lolium perenne*	70	98	90
Chewings and red fescue blend *Festuca rubra var. commutata* or *Festuca rubra*	30	98	90

This turf seed mix in Table D.2.1.2.D is for dry situations where there is no need for much water. The advantage is that this mix requires very little maintenance.

TABLE D.2.1.2.D LOW-GROWING TURF SEED MIX			
	% Weight	**% Purity**	**% Germination**
Dwarf tall fescue (several varieties) *Festuca arundinacea var.*	45	98	90
Dwarf perennial rye (Barclay) *Lolium perenne var. barclay*	30	98	90
Red fescue *Festuca rubra*	20	98	90
Colonial bentgrass *Agrostis tenuis*	5	98	90

Table D.2.1.2.E presents a mix recommended for bioswales and other intermittently wet areas. Sod shall generally not be used for bioswales because the seed mix is inappropriate for this application. Sod may be used for lining ditches to prevent erosion, but it will provide little water quality benefit during the wet season.

TABLE D.2.1.2.E BIOSWALE SEED MIX*			
	% Weight	**% Purity**	**% Germination**
Tall or meadow fescue *Festuca arundinacea* or *Festuca elatior*	75-80	98	90
Seaside/Creeping bentgrass *Agrostis palustris*	10-15	92	85
Redtop bentgrass *Agrostis alba* or *Agrostis gigantea*	5-10	90	80
* Modified Briargreen, Inc. Hydroseeding Guide Wetlands Seed Mix			

The seed mix shown in Table D.2.1.2.F is a recommended low-growing, relatively non-invasive seed mix appropriate for very wet areas that are not regulated wetlands (if planting in wetland areas, see Section 6.3.1 of the King County *Surface Water Design Manual*). Other mixes may be appropriate, depending on the soil type and hydrology of the area. Apply this mixture at a rate of 60 pounds per acre.

TABLE D.2.1.2.F WET AREA SEED MIX*			
	% Weight	**% Purity**	**% Germination**
Tall or meadow fescue *Festuca arundinacea* or *Festuca elatior*	60-70	98	90
Seaside/Creeping bentgrass *Agrostis palustris*	10-15	98	85
Meadow foxtail *Alepocurus pratensis*	10-15	90	80
Alsike clover *Trifolium hybridum*	1-6	98	90
Redtop bentgrass *Agrostis alba*	1-6	92	85
* Modified Briargreen, Inc. Hydroseeding Guide Wetlands Seed Mix			

The meadow seed mix in Table D.2.1.2.G is recommended for areas that will be maintained infrequently or not at all and where colonization by native plants is desirable. Likely applications include rural road and utility right-of-way. Seeding should take place in September or very early October in order to obtain adequate establishment prior to the winter months. The appropriateness of clover in the mix may need to be considered as this can be a fairly invasive species. If the soil is amended, the addition of clover may not be necessary.

TABLE D.2.1.2.G MEADOW SEED MIX			
	% Weight	**% Purity**	**% Germination**
Redtop or Oregon bentgrass *Agrostis alba* or *Agrostis oregonensis*	40	92	85
Red fescue *Festuca rubra*	40	98	90
White dutch clover *Trifolium repens*	20	98	90

Maintenance Standards for Temporary and Permanent Seeding

1. Any seeded areas that fail to establish at least 80 percent cover within one month shall be reseeded. If reseeding is ineffective, an alternate method, such as sodding or nets/blankets, shall be used. If winter weather prevents adequate grass growth, this time limit may be relaxed at the discretion of the County when critical areas would otherwise be protected.

2. After adequate cover is achieved, any areas that experience erosion shall be re-seeded and protected by mulch. If the erosion problem is drainage related, the problem shall be fixed and the eroded area re-seeded and protected by mulch.
3. Seeded areas shall be supplied with adequate moisture, but not watered to the extent that it causes runoff.

D.2.1.2.7 SODDING

Code: SO Symbol:

Purpose

The purpose of sodding is to establish permanent turf for immediate erosion protection and to stabilize drainage ways where concentrated overland flow will occur.

Conditions of Use

Sodding may be used in the following areas:

1. Disturbed areas that require short-term or long-term cover
2. Disturbed areas that require immediate vegetative cover
3. All waterways that require vegetative lining (except biofiltration swales—the seed mix used in most sod is not appropriate for biofiltration swales). Waterways may also be seeded rather than sodded, and protected with a net or blanket (see Section D.2.1.2.5).

Design and Installation Specifications

Sod shall be free of weeds, of uniform thickness (approximately 1-inch thick), and shall have a dense root mat for mechanical strength.

The following steps are recommended for sod installation:

1. Shape and smooth the surface to final grade in accordance with the approved grading plan.
2. Amend four inches (minimum) of well-rotted compost into the top eight inches of the soil if the organic content of the soil is less than ten percent. Compost used shall meet compost specifications per *SWDM* Reference 11-C.
3. Fertilize according to the supplier's recommendations. Disturbed areas within 200 feet of water bodies and wetlands must use non-phosphorus fertilizer.
4. Work lime and fertilizer 1 to 2 inches into the soil, and smooth the surface.
5. Lay strips of sod beginning at the lowest area to be sodded and perpendicular to the direction of water flow. Wedge strips securely into place. Square the ends of each strip to provide for a close, tight fit. Stagger joints at least 12 inches. Staple on slopes steeper than 3H:1V.
6. Roll the sodded area and irrigate.
7. When sodding is carried out in alternating strips or other patterns, seed the areas between the sod immediately after sodding.

Maintenance Standards

If the grass is unhealthy, the cause shall be determined and appropriate action taken to reestablish a healthy groundcover. If it is impossible to establish a healthy groundcover due to frequent saturation, instability, or some other cause, the sod shall be removed, the area seeded with an appropriate mix, and protected with a net or blanket.

TABLE D.2.1.2.A MULCH STANDARDS AND GUIDELINES			
Mulch Material	**Quality Standards**	**Application Rates**	**Remarks**
Straw	Air-dried; free from undesirable seed and coarse material	2"-3" thick; 5 bales per 1000 sf or 2-3 tons per acre	Cost-effective protection when applied with adequate thickness. Hand-application generally requires greater thickness than blown straw. Straw should be crimped to avoid wind blow. The thickness of straw may be reduced by half when used in conjunction with seeding.
Wood Fiber Cellulose	No growth inhibiting factors	Approx. 25-30 lbs per 1000 sf or 1500-2000 lbs per acre	Shall be applied with hydromulcher. Shall not be used without seed and tackifier unless the application rate is at least doubled. Some wood fiber with very long fibers can be effective at lower application rates and without seed or tackifier.
Compost	No visible water or dust during handling. Must be purchased from supplier with Solid Waste Handling Permit.	2" thick min.; approx. 100 tons per acre (approx. 1.5 cubic feet per square yard)	More effective control can be obtained by increasing thickness to 3" (2.25 cubic feet per square yard). Excellent mulch for protecting final grades until landscaping because it can be directly seeded or tilled into soil as an amendment. Compost may not be used in Sensitive Lake[7] basins unless analysis of the compost shows no phosphorous release.
Hydraulic Matrices (Bonded Fiber Matrix)	This mulch category includes hydraulic slurries composed of wood fiber, paper fiber or a combination of the two held together by a binding system. The BFM shall be a mixture of long wood fibers and various bonding agents.	Apply at rates from 3,000 lbs per acre to 4,000 lbs per acre and based on manufacturers recommendations	The BFM shall not be applied immediately before, during or immediately after rainfall so that the matrix will have an opportunity to dry for 24 hours after installation. Application rates beyond 2,500 pounds may interfere with germination and are not usually recommended for turf establishment. BFM is generally a matrix where all fiber and binders are in one bag, rather than having to mix components from various manufacturers to create a matrix. BFMs can be installed via helicopter in remote areas. They are approximately $1,000 per acre cheaper to install.
Chipped Site Vegetation	Average size shall be several inches.	2" minimum thickness	This is a cost-effective way to dispose of debris from clearing and grubbing, and it eliminates the problems associated with burning. Generally, it should not be used on slopes above approx. 10% because of its tendency to be transported by runoff. It is not recommended within 200 feet of surface waters. If seeding is expected shortly after mulch, the decomposition of the chipped vegetation may tie up nutrients important to grass establishment.

[7] *Sensitive lake* means a lake that has proved to be particularly prone to eutrophication; the County gives this designation when an active input plan has been adopted to limit the amount of phosphorous entering the lake.

LAST REVISED: 03/5/13

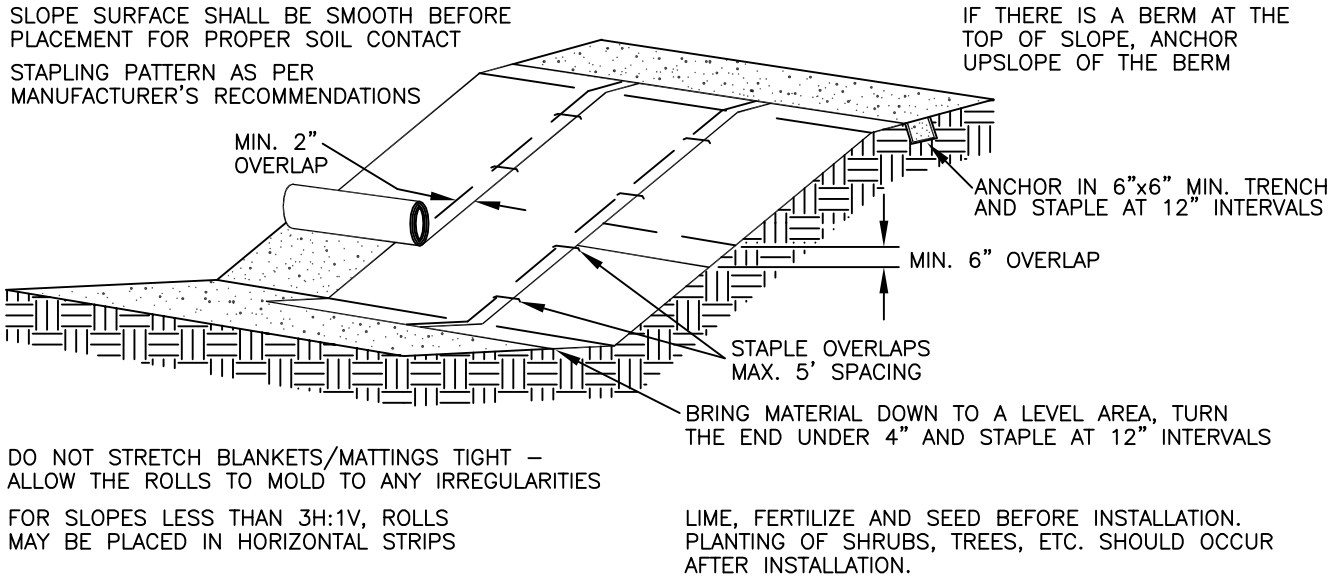

DO NOT STRETCH BLANKETS/MATTINGS TIGHT – ALLOW THE ROLLS TO MOLD TO ANY IRREGULARITIES

FOR SLOPES LESS THAN 3H:1V, ROLLS MAY BE PLACED IN HORIZONTAL STRIPS

LIME, FERTILIZE AND SEED BEFORE INSTALLATION. PLANTING OF SHRUBS, TREES, ETC. SHOULD OCCUR AFTER INSTALLATION.

NET & BLANKET INSTALLATION

NOT TO SCALE

NOTES:

1. IF BLANKET IS NOT LONG ENOUGH TO COVER THE ENTIRE SLOPE LENGTH, THE TRAILING EDGE OF THE UPPER BLANKET SHOULD OVERLAP THE LEADING EDGE OF THE LOWER BLANKET AND BE STAPLED.

2. MULCH IS REQUIRED FOR NETS, AND NOT REQUIRED FOR BLANKETS.

3. USE 100% BIODEGRADABLE BLANKETS IN SENSITIVE AREAS.

4. MAINTAIN GOOD CONTACT WITH THE GROUND. EROSION MUST NOT OCCUR BENEATH THE BLANKET.

5. INSPECT NETS AND BLANKETS AFTER EACH SIGNIFICANT STORM; MAINTAIN AND REPAIR PROMPTLY.

CITY OF KIRKLAND	
PLAN NO. CK– E.06	
CITY OF KIRKLAND WASHINGTON	NETS & BLANKETS

D.2.1.2.3 NETS AND BLANKETS

Code: NE Symbol:

Purpose

Erosion control nets and blankets are intended to prevent erosion and hold seed and mulch in place on steep slopes and in channels so that vegetation can become well established. In addition, some nets and blankets can be used to permanently reinforce turf to protect drainage ways during high flows. Nets are strands of material woven into an open, but high-tensile strength net (for example, jute matting). Blankets are strands of material that are not tightly woven, but instead form a layer of interlocking fibers, typically held together by a biodegradable or photodegradable netting (for example, excelsior or straw blankets). They generally have lower tensile strength than nets, but cover the ground more completely. Coir (coconut fiber) fabric comes as both nets and blankets.

Conditions of Use

Erosion control nets and blankets should be used:

1. For permanent stabilization of slopes 2H:1V or greater and with more than 10 feet of vertical relief.
2. In conjunction with seed for final stabilization of a slope, not for temporary cover. However, they may be used for temporary applications as long as the product is not damaged by repeated handling. In fact, this method of slope protection is superior to plastic sheeting, which generates high-velocity runoff (see Section D.2.1.2.4).
3. For drainage ditches and swales (highly recommended). The application of appropriate netting or blanket to drainage ditches and swales can protect bare soil from channelized runoff while vegetation is established. Nets and blankets also can capture a great deal of sediment due to their open, porous structure. Synthetic nets and blankets may be used to permanently stabilize channels and may provide a cost-effective, environmentally preferable alternative to riprap.

Design and Installation Specifications

1. See Figure D.2.1.2.B and Figure D.2.1.2.C for **typical orientation and installation** of nettings and blankets. *Note: Installation is critical to the effectiveness of these products. If good ground contact is not achieved, runoff can concentrate under the product, resulting in significant erosion.*
2. With the variety of products available, it is impossible to cover all the details of appropriate use and installation. Therefore, it is critical that the design engineer thoroughly consults the **manufacturer's information** and that a site visit takes place in order to insure that the product specified is appropriate.
3. Jute matting must be used in conjunction with mulch (Section D.2.1.2.2). Excelsior, woven straw blankets, and coir (coconut fiber) blankets may be installed without mulch. There are many other types of **erosion control nets and blankets** on the market that may be appropriate in certain circumstances. Other types of products will have to be evaluated individually. In general, most nets (e.g., jute matting) require mulch in order to prevent erosion because they have a fairly open structure. Blankets typically do not require mulch because they usually provide complete protection of the surface.
4. Purely synthetic blankets are allowed but shall only be used for long-term stabilization of waterways. The organic blankets authorized above are better for slope protection and short-term waterway protection because they retain moisture and provide organic matter to the soil, substantially improving the speed and success of re-vegetation.

Maintenance Standards

1. Good contact with the ground must be maintained, and there must not be erosion beneath the net or

blanket.

2. Any areas of the net or blanket that are damaged or not in close contact with the ground shall be repaired and stapled.
3. If erosion occurs due to poorly controlled drainage, the problem shall be fixed and the eroded area protected.

FIGURE D.2.1.2.B WATERWAY INSTALLATION

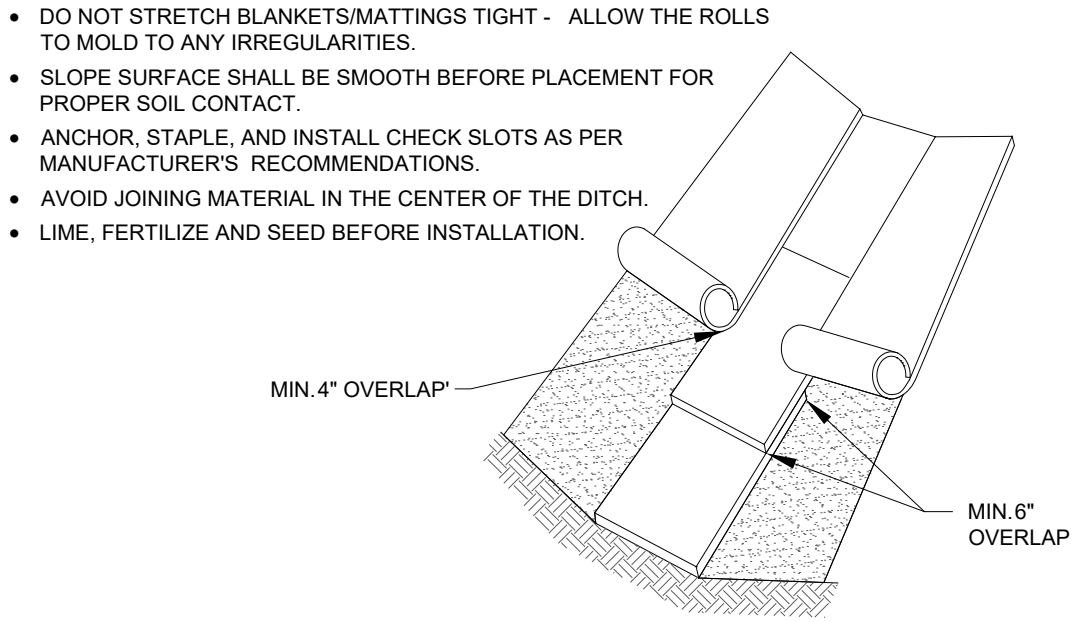

FIGURE D.2.1.2.C SLOPE INSTALLATION

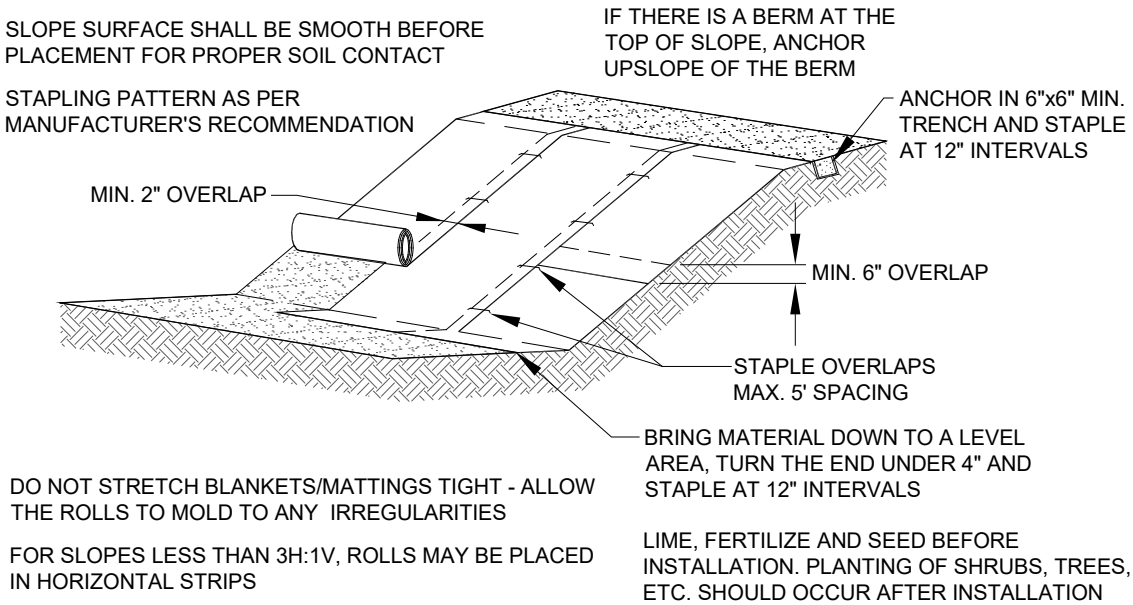

D.2.1.2.4 PLASTIC COVERING

Code: PC Symbol: PC

Purpose

Plastic covering provides immediate, short-term erosion protection to slopes and disturbed areas.

Conditions of Use

1. Plastic covering may be used on disturbed areas that require cover measures for less than 30 days.
2. Plastic is particularly useful for protecting cut and fill slopes and stockpiles. *Note: The relatively rapid breakdown of most polyethylene sheeting makes it unsuitable for long-term applications.*
3. Clear plastic sheeting may be used over newly-seeded areas to create a greenhouse effect and encourage grass growth. Clear plastic should not be used for this purpose during the summer months because the resulting high temperatures can kill the grass.
4. Due to rapid runoff caused by plastic sheeting, this method shall not be used upslope of areas that might be adversely impacted by concentrated runoff. Such areas include steep and/or unstable slopes.

Note: There have been many problems with plastic, usually attributable to poor installation and maintenance. However, the material itself can cause problems, even when correctly installed and maintained, because it generates high-velocity runoff and breaks down quickly due to ultraviolet radiation. In addition, if the plastic is not completely removed, it can clog drainage system inlets and outlets. It is highly recommended that alternatives to plastic sheeting be used whenever possible and that its use be limited.

Design and Installation Specifications

1. See Figure D.2.1.2.D for details.
2. Plastic sheeting shall have a minimum thickness of 0.06 millimeters.
3. If erosion at the toe of a slope is likely, a gravel berm, riprap, or other suitable protection shall be installed at the toe of the slope in order to reduce the velocity of runoff.

FIGURE D.2.1.2.D PLASTIC COVERING

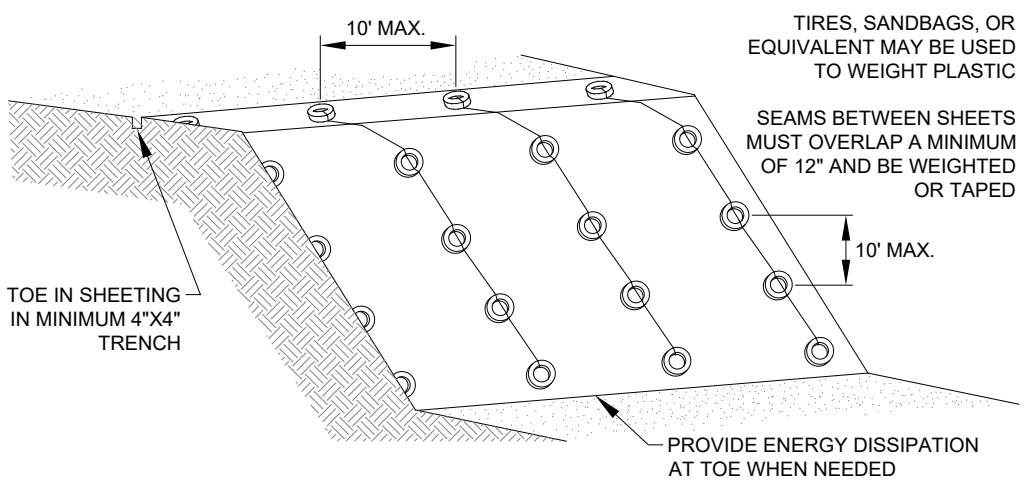

Maintenance Standards for Plastic Covering

1. Torn sheets must be replaced and open seams repaired.
2. If the plastic begins to deteriorate due to ultraviolet radiation, it must be completely removed and replaced.
3. When the plastic is no longer needed, it shall be completely removed.

D.2.1.2.5 STRAW WATTLES

Code: SW

Symbol:

Purpose

Wattles are erosion and sediment control barriers consisting of straw wrapped in biodegradable tubular plastic or similar encasing material. Wattles may reduce the velocity and can spread the flow of rill and sheet runoff, and can capture and retain sediment. Straw wattles are typically 8 to 10 inches in diameter and 25 to 30 feet in length. The wattles are placed in shallow trenches and staked along the contour of disturbed or newly constructed slopes.

Conditions of Use

1. Install on disturbed areas that require immediate erosion protection.
2. Use on slopes requiring stabilization until permanent vegetation can be established.
3. Can be used along the perimeter of a project, as a check dam in unlined ditches and around temporary stockpiles
4. Wattles can be staked to the ground using willow cuttings for added revegetation.
5. Rilling can occur beneath and between wattles if not properly entrenched, allowing water to pass below and between wattles

Design and Installation Specifications

1. It is critical that wattles are installed perpendicular to the flow direction and parallel to the slope contour.
2. Narrow trenches should be dug across the slope, on contour, to a depth of 3 to 5 inches on clay soils and soils with gradual slopes. On loose soils, steep slopes, and during high rainfall events, the trenches should be dug to a depth of 5 to 7 inches, or ½ to 2/3 of the thickness of the wattle.
3. Start construction of trenches and installing wattles from the base of the slope and work uphill. Excavated material should be spread evenly along the uphill slope and compacted using hand tamping or other method. Construct trenches at contour intervals of 3 to 30 feet apart depending on the steepness of the slope, soil type, and rainfall. The steeper the slope the closer together the trenches should be constructed.
4. Install the wattles snugly into the trenches and abut tightly end to end. Do not overlap the ends.
5. Install stakes at each end of the wattle, and at 4 foot centers along the entire length of the wattle.
6. If required, install pilot holes for the stakes using a straight bar to drive holes through the wattle and into the soil.
7. At a minimum, wooden stakes should be approximately ¾ x ¾ x 24 inches. Willow cuttings or 3/8 inch rebar can also be used for stakes.

LAST REVISED:04/15/12

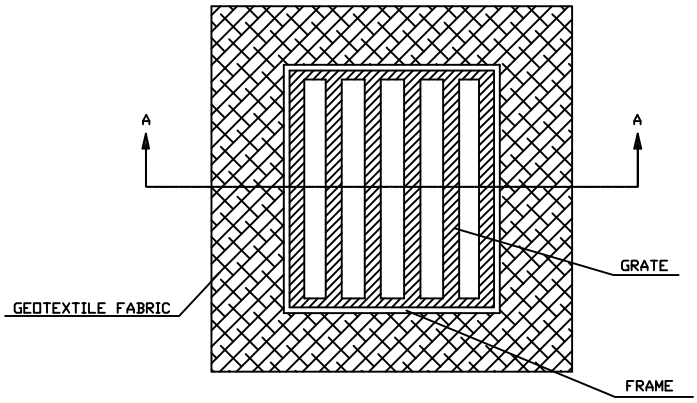

PLAN VIEW
NTS

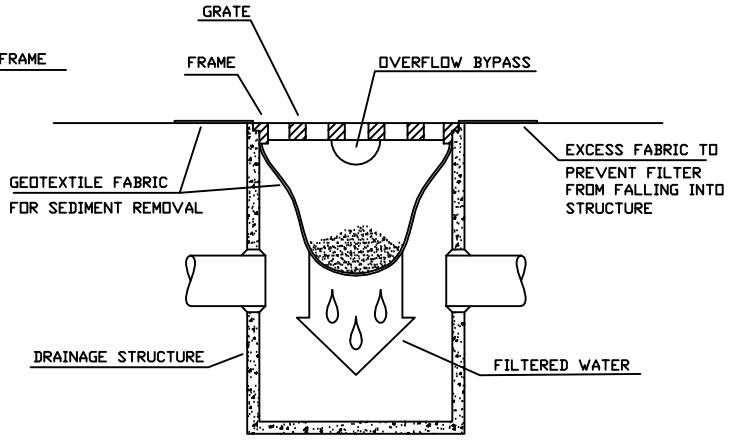

STORM DRAIN PROTECTION INSERT
SECTION A-A
NTS

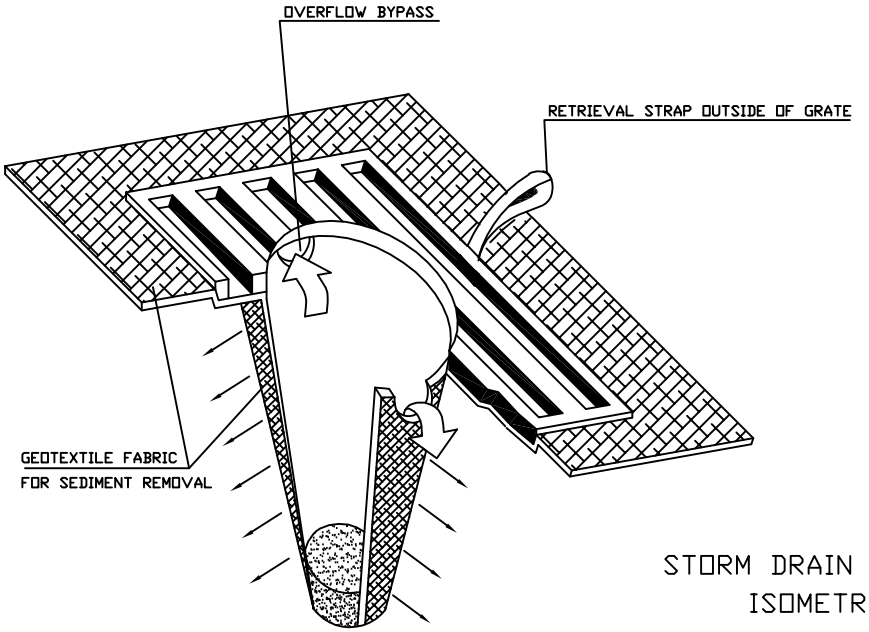

STORM DRAIN PROTECTION INSERT
ISOMETRIC VIEW (TYP.)
NTS

CITY OF KIRKLAND	
PLAN NO. CK-E.11	
CITY OF KIRKLAND WASHINGTON	STORM DRAIN PROTECTION INSERT

(Sections D.2.1.5 and D.2.1.6, respectively). In some circumstances, however, the approved model 10-year 15-minute peak flow should be used. Examples of such circumstances include the following:

- Sites that are within ¼ mile of salmonid streams, wetlands, and designated sensitive lakes such as Lake Sammamish
- Sites where significant clearing and grading is likely to occur during the wet season
- Sites with downstream erosion or sedimentation problems.

Natural Vegetation: Whenever possible, sediment-laden water shall be discharged into onsite, relatively level, vegetated areas. This is the only way to effectively remove fine particles from runoff. This can be particularly useful after initial treatment in a sediment retention facility. The areas of release must be evaluated on a site-by-site basis in order to determine appropriate locations for and methods of releasing runoff. Vegetated wetlands shall not be used for this purpose. Frequently, it may be possible to pump water from the collection point at the downhill end of the site to an upslope vegetated area. Pumping shall only augment the treatment system, not replace it because of the possibility of pump failure or runoff volume in excess of pump capacity.

D.2.1.5.1 SEDIMENT TRAP

Code: ST Symbol: 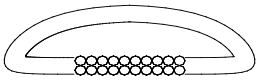

Purpose

Sediment traps remove sediment from runoff originating from disturbed areas of the site. Sediment traps are typically designed to only remove sediment as small as medium silt (0.02 mm). As a consequence, they usually only result in a small reduction in turbidity.

Conditions of Use

A sediment trap shall be used where the contributing drainage area is 3 acres or less.

Design and Installation Specifications

1. See Figure D.2.1.5.A for details.
2. If permanent runoff control facilities are part of the project, they should be used for sediment retention (see "**Use of Permanent Drainage Facilities**" on page D-47).
3. To determine the trap geometry, first calculate the design surface area (*SA*) of the trap, measured at the invert of the weir. Use the following equation:

$$SA = FS(Q_2/V_S)$$

where Q_2 = Design inflow (cfs) from the contributing drainage area based on the developed condition 2-year or 10-year peak discharge using the approved model with 15-minute time steps as computed in the hydrologic analysis. The approved model 10-year 15-minute peak flow shall be used if the project size, expected timing and duration of construction, or downstream conditions warrant a higher level of protection, or if the pond discharge path leaves the ***site*** (note provisions must made to prevent increases in the existing site conditions 2-year and 10-year runoff peaks discharging from the project ***site*** during construction, see Section D.3.9, Flow Control). If no hydrologic analysis is required, the Rational Method may be used (Section 3.2.1 of the King County *Surface Water Design Manual*).

V_S = The settling velocity (ft/sec) of the soil particle of interest. The 0.02 mm (medium silt) particle with an assumed density of 2.65 g/cm^3 has been selected as the particle of interest and has a settling velocity (V_S) of 0.00096 ft/sec.

FS = A safety factor of 2 to account for non-ideal settling.

Therefore, the equation for computing surface area becomes:

$$SA = 2 \times Q_2/0.00096 \quad \text{or} \quad 2080 \text{ square feet per cfs of inflow}$$

Note: Even if permanent facilities are used, they must still have a surface area that is at least as large as that derived from the above formula. If they do not, the pond must be enlarged.

4. To aid in determining sediment depth, all traps shall have a staff gage with a prominent mark one foot above the bottom of the trap.

Maintenance Standards

1. Sediment shall be removed from the trap when it reaches 1 foot in depth.
2. Any damage to the trap embankments or slopes shall be repaired.

FIGURE D.2.1.5.A SEDIMENT TRAP

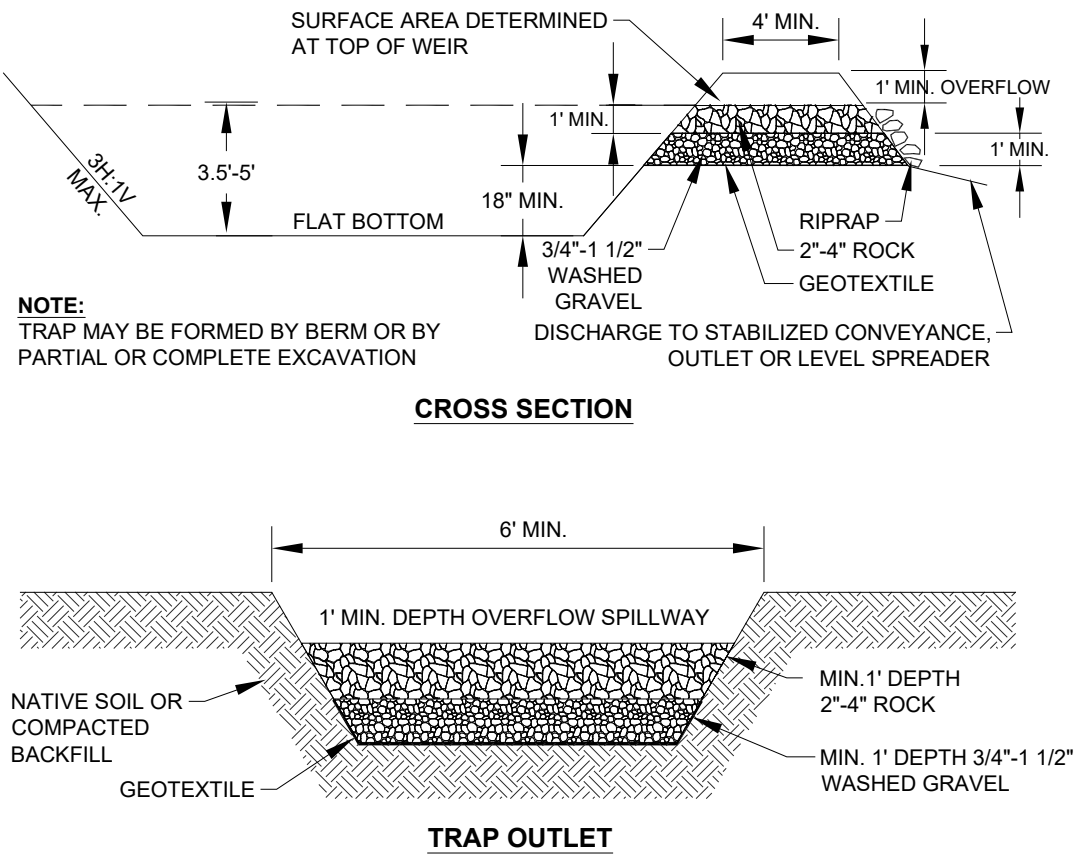

Attachment C
Alternative Construction BMPs

LAST REVISED: 04/15/12

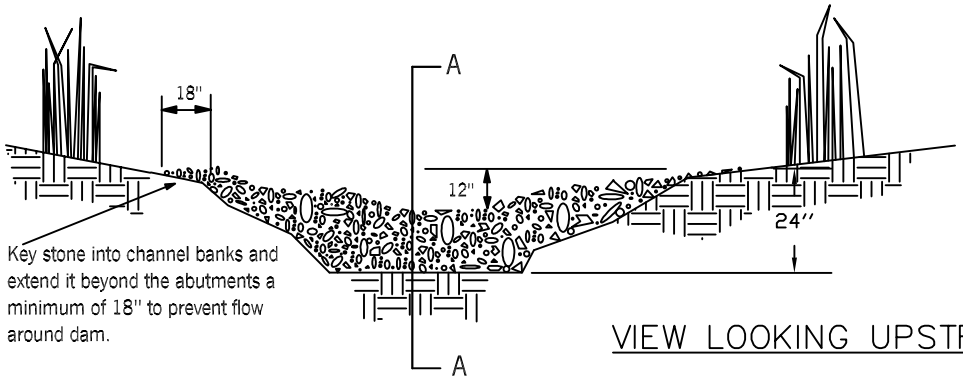

VIEW LOOKING UPSTREAM

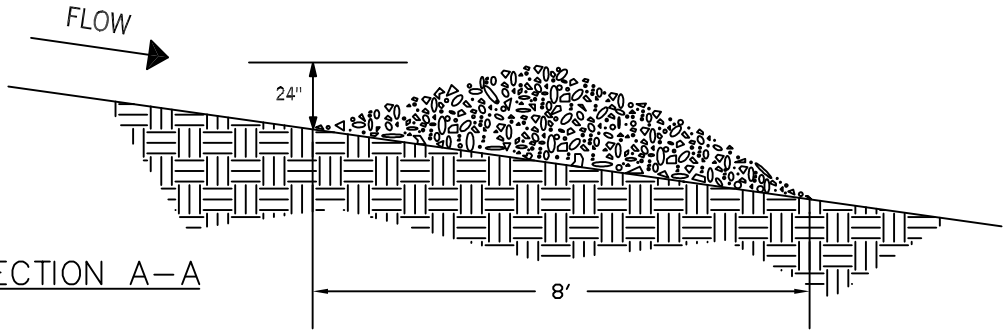

SECTION A–A

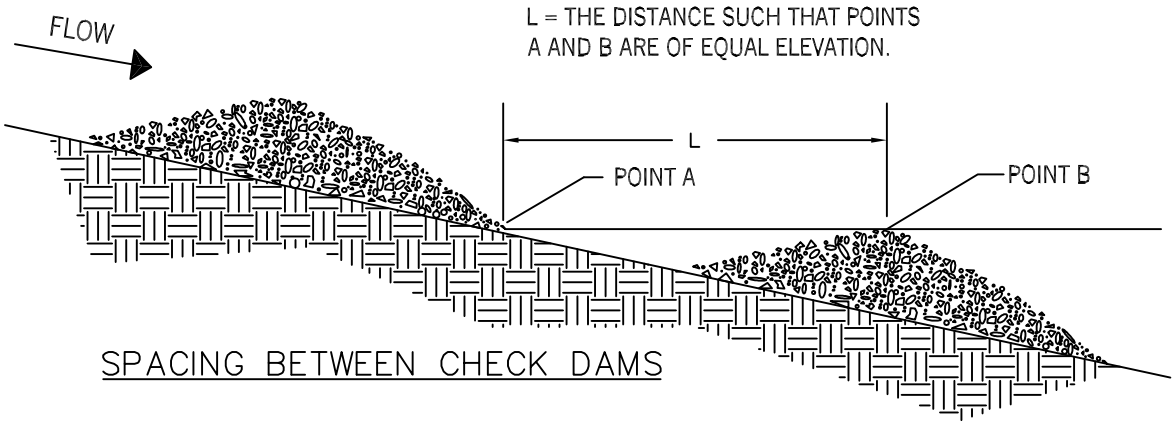

SPACING BETWEEN CHECK DAMS

NOTES:

1. CHECK DAMS TO BE CONSTRUCTED OF ROCK, PEA-GRAVEL FILLED BAGS, SAND BAGS, OR EQUIVALENT APPROVED BY PUBLIC WORKS.
2. PLACE CHECK DAMS PERPENDICULAR TO FLOW OF WATER.
3. SIDE SLOPES ARE 2:1 (H:V) OR FLATTER.
4. USE FILTER FABRIC FOUNDATION UNDER CHECK DAM.
5. ROCK CHECK DAMS SHALL BE CONSTRUCTED OF APPROPRIATELY SIZED ROCK, AND PLACED BY HAND OR MECHANICAL MEANS (NO DUMPING OF ROCK TO FORM DAM).
6. INSPECT DAM AFTER EACH SIGNIFICANT STORM; MAINTAIN AND REPAIR PROMPTLY.

NOT TO SCALE

CITY OF KIRKLAND	
PLAN NO. CK– E.07	
CITY OF KIRKLAND WASHINGTON	CHECK DAM

LAST REVISED:04/15/12

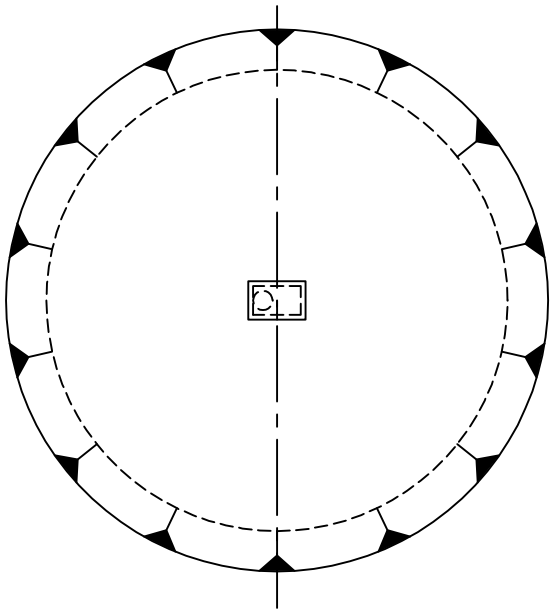

PLAN

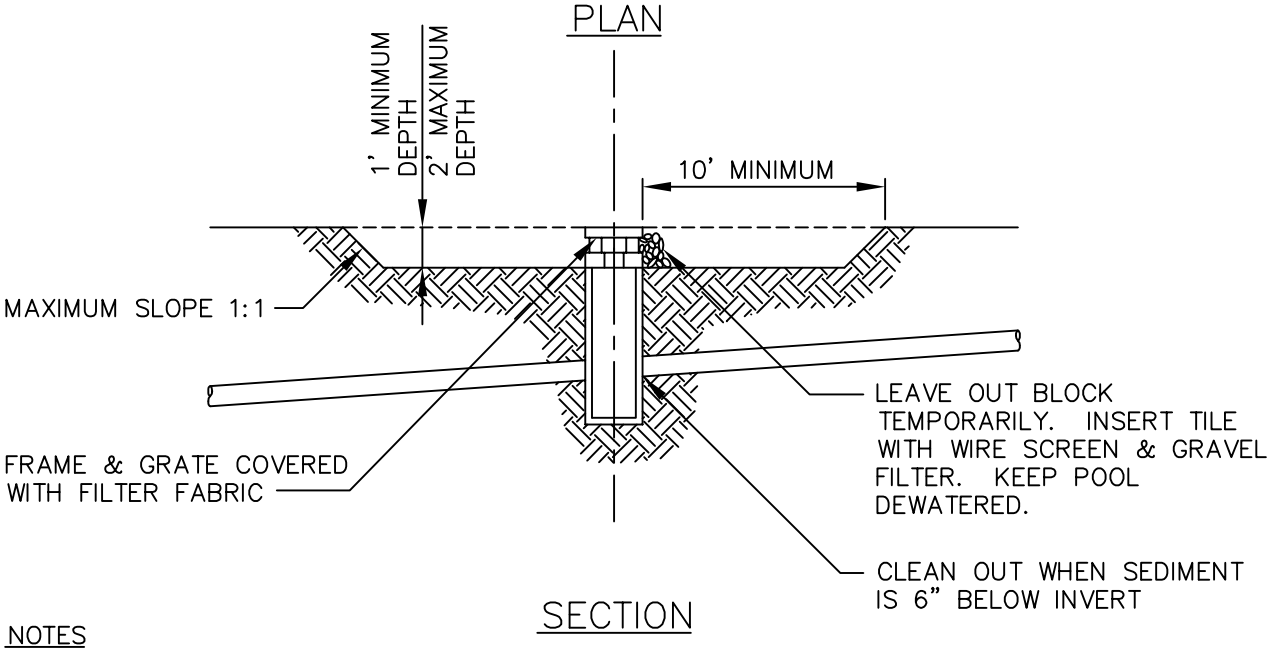

SECTION

NOTES

1. PROTECT INLETS DURING CONSTRUCTION. KEEP SEDIMENT OUT OF THE STORM DRAINAGE SYSTEM. USE HALF-CIRCLE BEHIND CURB INLETS DURING STREET CONSTRUCTION. MODIFY PROTECTION AS CONSTRUCTION PROGRESSES.

2. CIRCULAR SHAPE IS NOT ESSENTIAL; VARY SHAPE TO FIT DRAINAGE AREA AND TERRAIN. OBSERVE TO CHECK TRAP EFFICENCY AND MODIFY AS NECESSARY TO INSURE SATISFACTORY TRAPPING OF SEDIMENT. CAN BE ADAPTED TO THRU-CURB INLET.

3. ALLOW 2' MINIMUM OVERHANG OR FILTER FABRIC. FILTER FABRIC OVERHANG MUST BE COVERED WITH 1-1/4" CRUSHED ROCK.

4. FILTER FENCE MAY BE REQUIRED AROUND PERIMETER OF BASIN.

CITY OF KIRKLAND	
PLAN NO. CK-E.08	
CITY OF KIRKLAND WASHINGTON	CATCH BASIN/INLET SEDIMENTATION TRAP

LAST REVISED:04/15/12

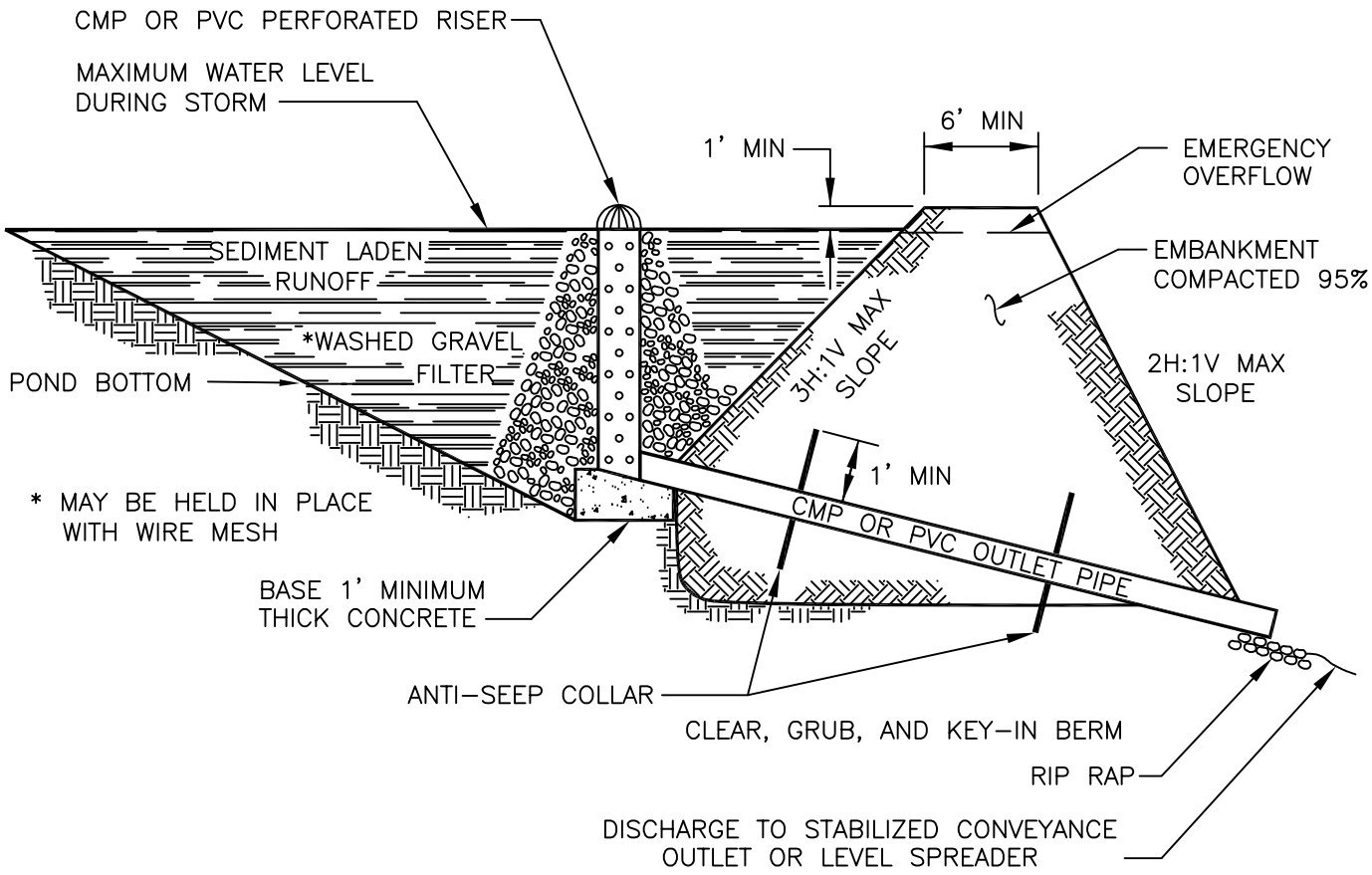

NOTES

1. VOLUME SHALL BE DETERMINED BY THE ECOLOGY STORMWATER MANAGEMENT MANUAL FOR W. WA OR KING COUNTY SURFACE WATER MANUAL.
2. REMOVE SEDIMENT FROM THE POND WHEN IT ACCUMULATES 1 FOOT DEPTH.
3. POND LENGTH SHALL BE 3 TIMES GREATER THAN THE WIDTH.

CITY OF KIRKLAND	
PLAN NO. CK-E.09	
CITY OF KIRKLAND WASHINGTON	TEMPORARY SEDIMENT POND

LAST REVISED:04/15/12

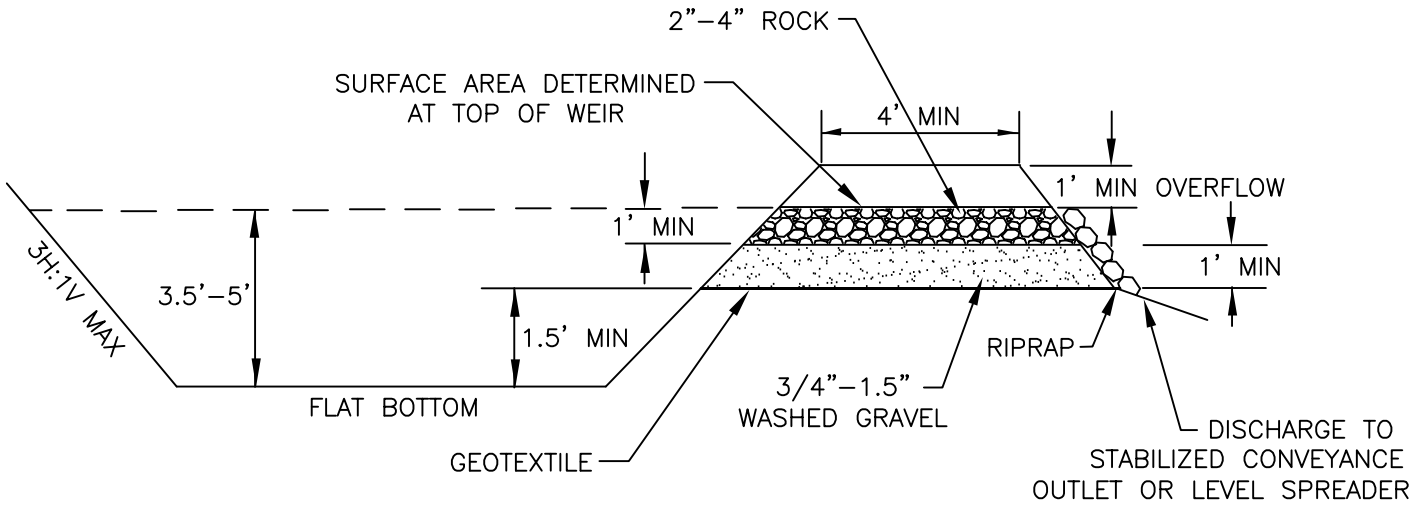

CROSS–SECTION

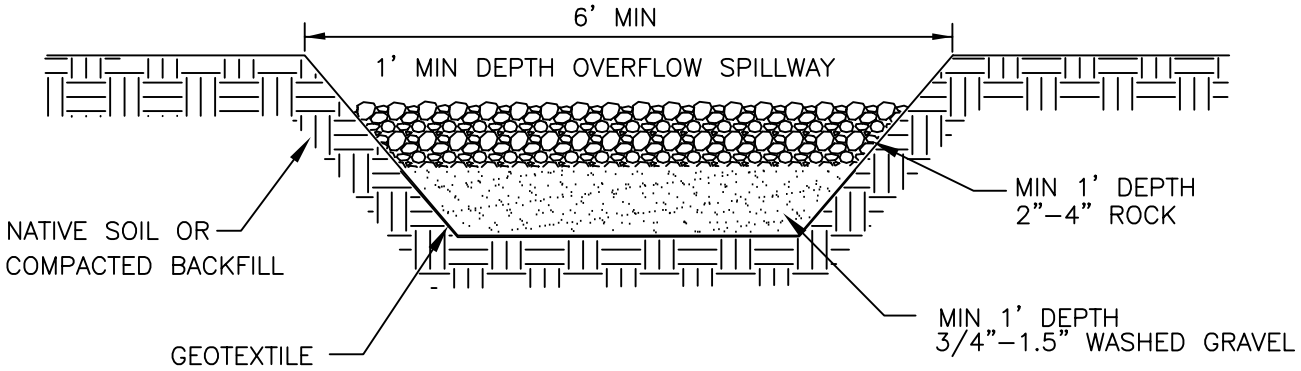

TRAP OUTLET

NOTES

1. VOLUME SHALL BE DETERMINED BY THE ECOLOGY STORMWATER MANAGEMENT MANUAL FOR W. WA OR KING COUNTY SURFACE WATER DESIGN MANUAL.

2. REMOVE SEDIMENT FROM THE TRAP WHEN IT ACCUMULATES 1 FOOT DEPTH.

CITY OF KIRKLAND	
PLAN NO. CK–E.09A	
CITY OF KIRKLAND WASHINGTON	TEMPORARY SEDIMENT TRAP

LAST REVISED: 02/28/14

SOIL AMENDMENT NOTES FOR BMP T5.13

REFERENCE: WA STATE DEPT. OF ECOLOGY'S STORMWATER MANAGEMENT MANUAL FOR W. WA

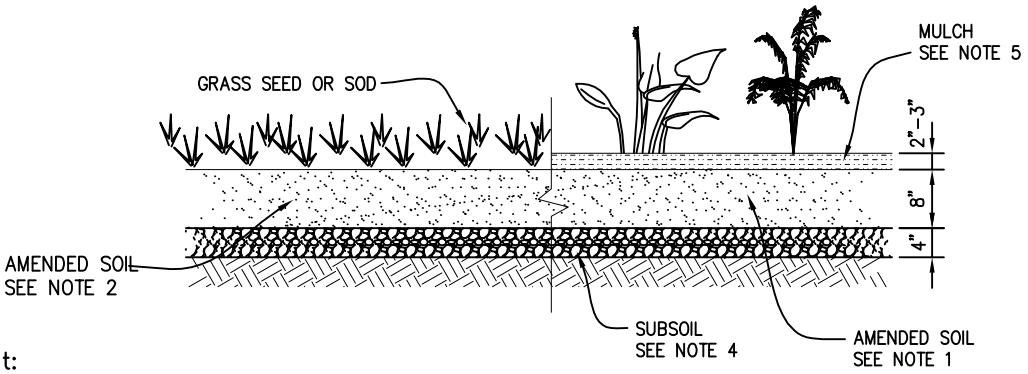

Notes for Soil Amendment:

General:

1. For planting areas, the minimum acceptable organic matter content by dry weight is 10% (loss–on–ignition testing).

2. For turf areas, the minimum acceptable organic matter content by dry weight is 5% (loss–on–ignition testing).

3. A minimum organic–amended depth of 8 inches (except in tree protection areas) is required.

4. Subsoil shall be scarified 4 inches below amended layer to produce 12–inch depth of un–compacted soil.

5. Planting beds should be mulched after planting with 2 to 3 inches of organic material such as arborist wood chip mulch.

6. Soil amendment cannot be placed in overly saturated soils. It is recommended that the soil amendment be placed between May 1 and October 1, when soils are typically driest and less subject to compaction.

7. Prior to soil installation, applicant will submit soil test verification, including tests from either supplier or contractor (depending on option chosen) to verify organic matter content and that compost meets WAC specifications. Soil verification test method must meet ASTM D2974. The verification shall clearly state the following (at a minimum): test date, test method used, testing company, and loss–on–ignition (LOI) results.

Soil Amendment Implementation Options

Option 1 – Imported Amended Soil:

1. For planting beds, a mix by volume of 40% compost (meeting WAC 173–350–220) with 60% mineral aggregate is pre–approved to meet the organic matter content by dry weight (loss–on–ignition test).

2. For turf areas, a mix by volume of 25% compost (meeting WAC 173–350–220) with 75% mineral aggregate is pre–approved to meet the organic matter content by dry weight (loss–on–ignition test).

Option 2 – Amending Existing Disturbed Topsoil:

1. For planting beds, 3 inches of compost (meeting WAC 173–350–220) incorporated into the top 8 inch depth is pre–approved to meet the organic matter content by dry weight (loss–on–ignition test).

2. For turf areas, 1.75 inches of compost (meeting WAC 173–350–220) incorporated into the top 8 inch depth is pre–approved to meet the organic matter content by dry weight (loss–on–ignition test).

Option 3 – Amending Stockpiled Topsoil from Cleared Areas:

1. Stockpile and cover soil with 3 inches of wood chips, weed barrier, or other breathable materials that sheds moisture yet allows air transmission.

2. Test stockpile material (prior to adding compost) for organic matter content to determine whether additional compost must be tilled into the stockpiled material to meet the required organic matter content by dry weight (loss–on–ignition test).

3. After the stockpiled material has been laid, a soil sample will be taken by applicant / contractor for every 5,000 sf or every lot (whichever is less) to test that the site meets the required organic matter content by dry weight (loss–on–ignition test).

CITY OF KIRKLAND	
PLAN NO. CK–E.12	
CITY OF KIRKLAND WASHINGTON	SOIL AMENDMENT

LAST REVISED:04/15/12

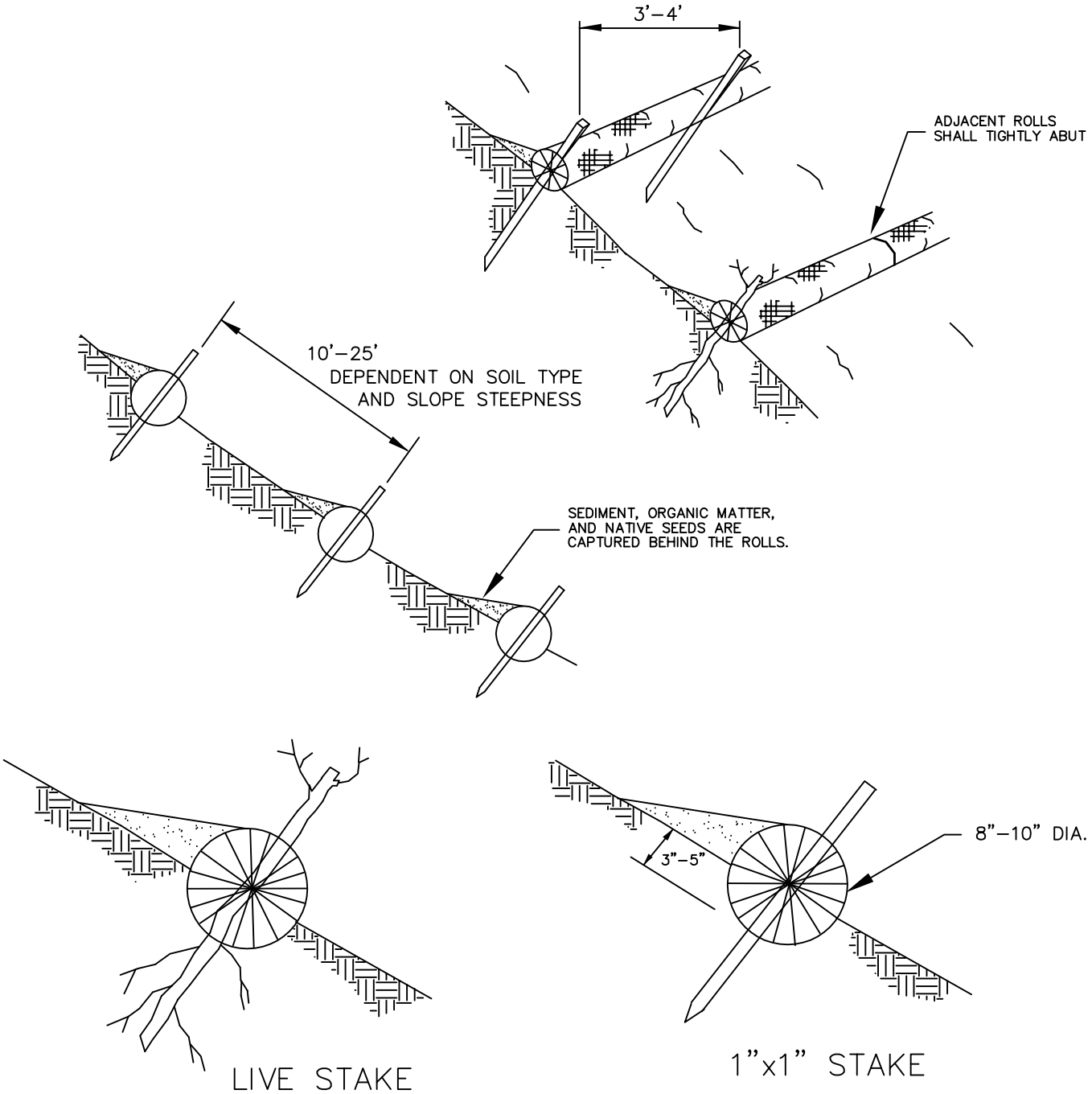

NOT TO SCALE

NOTES

1. STRAW ROLES SHALL BE PLACED ALONG SLOPE CONTOURS.

2. STRAW ROLL INSTALLATION REQUIRES THE PLACEMENT AND SECURE STAKING OF THE ROLL IN A TRENCH, 3"–5" DEEP, DUG ON CONTOUR. RUNOFF MUST NOT BE ALLOWED TO RUN UNDER OR AROUND ROLL.

3. DRIVE STAKE THROUGH MIDDLE OF WATTLE, LEAVING 2"–3" OF STAKE PORTRUDING ABOVE WATTLE.

CITY OF KIRKLAND	
PLAN NO. CK–E.10	
CITY OF KIRKLAND WASHINGTON	STRAW WATTLES

D.3.3.2 BRUSH BARRIER

Code: BB Symbol:

Purpose

The purpose of brush barriers is to reduce the transport of coarse sediment from a construction site by providing a temporary physical barrier to sediment and reducing the runoff velocities of overland flow.

Conditions of Use

1. Brush barriers may be used downslope of all disturbed areas.
2. Brush barriers are not intended to treat concentrated flows, nor are they intended to treat substantial amounts of overland flow. Any concentrated flows must be conveyed through the drainage system to a sediment trap or pond. The only circumstance in which overland flow may be treated solely by a barrier, rather than by a sediment trap or pond, is when the area draining to the barrier is small (see "Criteria for Use as Primary Treatment" on page D-30).

Design and Installation Specifications

1. See Figure D.3.3.C for details.
2. King County may require filter fabric (geotextile) anchored over the brush berm to enhance the filtration ability of the barrier.

Maintenance Standards

1. There shall be no signs of erosion or concentrated runoff under or around the barrier. If concentrated flows are bypassing the barrier, it must be expanded or augmented by toed-in filter fabric.
2. The dimensions of the barrier must be maintained.

FIGURE D.3.3.C BRUSH BARRIER

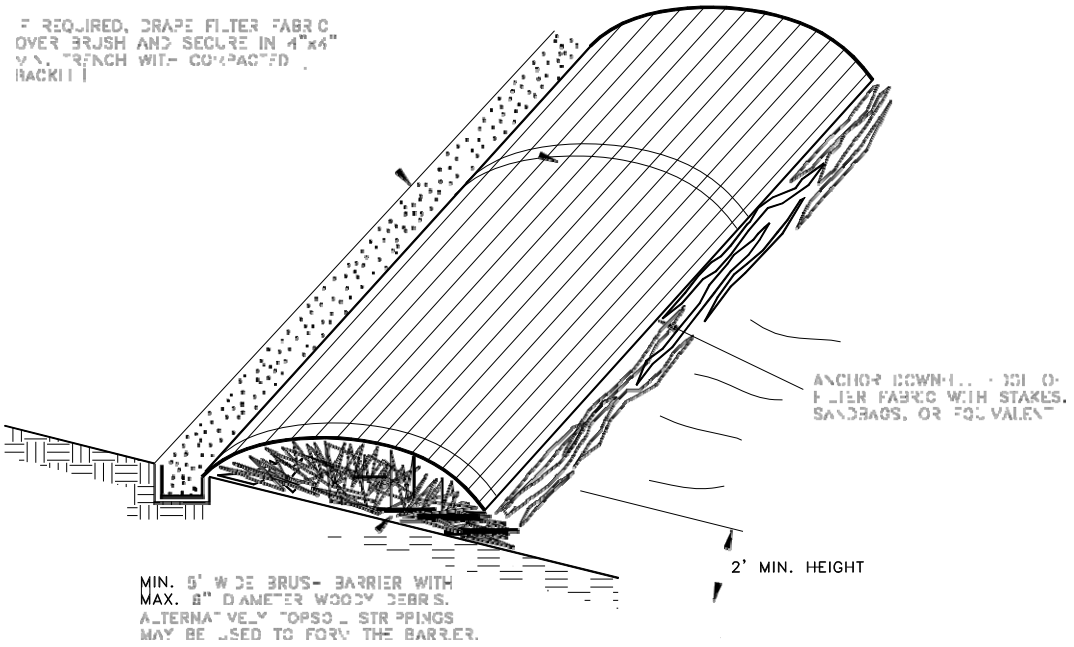

2. May be used on soil or pavement with adhesive or staples.
3. TSDs have been used to build temporary sediment ponds, diversion ditches, concrete washout facilities, curbing, water bars, level spreaders, and berms.

Design and Installation Specifications

1. TSDs must be made of urethane foam sewn into a woven geosynthetic fabric.
2. TSDs are triangular, 10 inches to 14 inches high in the center, with a 20-inch to 28-inch base. A 2-foot apron extends beyond both sides of the triangle along its standard section of 7 feet. A sleeve at one end allows attachment of additional sections as needed
3. Install TSDs with ends curved up to prevent water from flowing around the ends
4. Attach the TSDs and their fabric flaps to the ground with wire staples. Wire staples must be No. 11 gauge wire or stronger and shall be 200 mm to 300 mm in length.
5. When multiple units are installed, the sleeve of fabric at the end of the unit shall overlap the abutting unit and be stapled.
6. TSDs must be located and installed as soon as construction will allow.
7. TSDs must be placed perpendicular to the flow of water.
8. When used as check dams, the leading edge must be secured with rocks, sandbags, or a small key slot and staples.
9. When used in grass-lined ditches and swales, the TSD check dams and accumulated sediment shall be removed when the grass has matured sufficiently to protect the ditch or swale unless the slope of the swale is greater than 4 percent. The area beneath the TSD check dams shall be seeded and mulched immediately after dam removal.

Maintenance Standards

1. Triangular silt dikes shall be monitored for performance and sediment accumulation during and after each runoff producing rainfall event. Sediment shall be removed when it reaches one half the height of the silt dike.
2. Anticipate submergence and deposition above the triangular silt dike and erosion from high flows around the edges of the dike/dam. Immediately repair any damage or any undercutting of the dike/dam.

D.3.3.5 COMPOST BERMS

Code: COBE Symbol:

Purpose

Compost berms are an option to meet the requirements of perimeter protection. Compost berms may reduce the transport of sediment from a construction site by providing a temporary physical barrier to sediment and reducing the runoff velocities of overland flow. Compost berms trap sediment by filtering water passing through the berm and allowing water to pond, creating a settling area for solids behind the berm. Organic materials in the compost can also reduce concentrations of metals and petroleum hydrocarbons from construction runoff. Due to the increase in phosphorous seen in the effluent data from compost berms, they should be used with some cautions in areas that drain to phosphorus sensitive water bodies, and should only be used in Sensitive Lake watersheds, such as Lake Sammamish, with the approval from the County or the local jurisdiction.

Conditions of Use

1. Compost berms may be used in most areas requiring sediment or erosion control where runoff is in the form of sheet flow or in areas where silt fence is normally considered acceptable. Compost berms may be used in areas where migration of aquatic life such as turtles and salamanders are impeded by the use of silt fence.
2. Compost berms are not intended to treat concentrated flows, nor are they intended to treat substantial amounts of overland flow. Any concentrated flows must be conveyed via a drainage system to a sediment pond or trap.
3. For purposes of long-term sediment control objectives, berms may be seeded at the time of installation to create an additional vegetated filtering component.

Design and Installation Specifications

1. Compost berms shall be applied using a pneumatic blower device or equivalent, to produce a uniform cross-section and berm density.
2. Compost berms shall be triangular in cross-section. The ratio of base to height dimensions shall be 2:1.
3. The minimum size of a compost berm is a 2-foot base with a 1-foot height.
4. Compost berms shall be sized and spaced as indicated in the table below.

SLOPE	SLOPE	Maximum Slope Length or Berm Spacing (linear feet)	Berm Size Required (height x base width)
0% - 2%	Flatter than 50:1	250	1 ft x 2 ft
2% - 10%	50:1 – 10:1	125	1 ft x 2 ft
10% - 20%	10:1 – 5:1	100	1 ft x 2 ft
20% - 33%	5:1 – 3:1	75	1 ft x 2 ft
33% - 50%	3:1 – 2:1	50	1.5 ft x 3 ft

5. Compost berms shall not be used on slopes greater than 2H:1V
6. Compost shall meet criteria in WAC 173-350-220 (10) for Designation of Composted Materials
7. Compost shall be obtained from a supplier meeting the requirements of WAC 173-350-220.
8. Compost particle size distribution shall be as follows: 99% passing a 1 inch sieve, 90% passing a ¾ inch sieve and a minimum of 70% greater than the 3/8 inch sieve. A total of 98% shall not exceed 3 inches in length.
9. Berms shall be placed on level contours to assist in dissipating flow into sheet flow rather than concentrated flows. Berms shall not be constructed to concentrate runoff or channel water. Sheet flow of water shall be perpendicular to the berm at impact. No concentrated flow shall be directed towards compost berms.
10. Where possible, berms shall be placed 5 feet or more from the toe of slopes to allow space for sediment deposition and collection.
11. In order to prevent water from flowing around the ends of the berms, the ends of the berm shall be constructed pointing upslope so the ends are at a higher elevation than the rest of the berm.
12. A compost blanket extending 10 – 15 feet above the berm is recommended where the surface above the berm is rutted or uneven, to reduce concentrated flow and promote sheet flow into the berm.

Maintenance Standards

1. Compost berms shall be regularly inspected to make sure they retain their shape and allow adequate flow-through of stormwater.
2. When construction is completed on site, the berms shall be dispersed for incorporation into the soil or left on top of the site for final seeding to occur.
3. Any damage to berms must be repaired immediately. Damage includes flattening, compacting, rills, eroded areas due to overtopping.
4. If concentrated flows are evident uphill of the berm, the flows must be intercepted and conveyed to a sediment trap or pond.
5. The uphill side of the berm shall be inspected for signs of the berm clogging and acting as a barrier to flows and causing channelization of flows parallel to the berm. If this occurs, replace the berm or remove the trapped sediment.
6. Sediment that collects behind the berm must be removed when the sediment is more than 6 inches deep.

D.3.3.6 COMPOST SOCKS

Code: COSO Symbol:

Purpose

Compost socks reduce the transport of sediment from a construction site by providing a temporary physical barrier to sediment-laden water and reducing the runoff velocities of overland flow. Compost socks trap sediment by filtering water that passes through the sock and allows water to pond behind the sock, creating a settling area for solids. Organic materials in the compost also may reduce metal and petroleum hydrocarbon concentrations in construction runoff. Compost socks function similarly to compost berms; however, because the compost is contained in a mesh tube, they are appropriate for both concentrated flow and sheet flow. Compost socks may be used to channel concentrated flow on hard surfaces.

Conditions of Use

1. Compost socks may be used in areas requiring sediment or erosion control where runoff is in the form of sheet flow or in areas that silt fence is normally considered acceptable. Compost socks may also be used in sensitive environmental areas where migration of aquatic life, including turtles, salamanders and other aquatic life may be impeded by the used of silt fence.
2. Compost socks are not intended to treat substantial amounts of overland flow. However, compost socks may be subjected to some ponding and concentrated flows. If intended primarily as a filtration device, the socks should be sized and placed so that flows do not overtop the socks.
3. For purposes of long term sediment control objectives, compost socks may be seeded at the time of installation to create an additional vegetated filtering component.

Design and Installation Specifications

1. Compost socks shall be produced using a pneumatic blower hose or equivalent to fill a mesh tube with compost to create a uniform cross-section and berm density.
2. Socks shall be filled so they are firmly – packed yet flexible. Upon initial filling, the socks shall be filled to have a round cross-section. Once placed on the ground, it is recommended to apply weight to

4. Add PAM/Water mixture to the truck.
5. Completely fill the water truck to specified volume.
6. Spray PAM/Water mixture onto dry soil until the soil surface is uniformly and completely wetted.

Alternate Application Method

PAM may also be applied as a powder at the rate of 5 pounds per acre. This must be applied on a day that is dry. For areas less than 5-10 acres, a hand-held "organ grinder" fertilized spreader set to the smallest setting will work. Tractor mounted spreaders will work for larger areas.

Maintenance Standards

1. PAM may be reapplied on actively worked areas after a 48-hour period
2. Reapplication is not required unless PAM treated soil is disturbed or unless turbidity levels show the need for an additional application. If PAM treated soil is left undisturbed, a reapplication may be necessary after two months. More PAM applications may be required for steep slopes, silty and clay soils, (USDA classification Type "C" and "D" soils), long grades, and high precipitation areas. When PAM is applied first to bare soil and then covered with straw, a reapplication may not be necessary for several months.

D.3.2.9 COMPOST BLANKETS

Code: COBL Symbol:

Purpose

Compost blankets are intended to:

- Provide immediate temporary protection from erosion by protecting soil from rainfall and slowing flow velocity over the soil surface.
- Enhance temporary or permanent plant establishment by conserving moisture, holding seed and topsoil in place, providing nutrients and soil microorganisms, and moderating soil temperatures.
- Compost blankets, applied at the proper thickness and tilled into the soil, are also an option for amending soils for permanent landscaping.
- Compost generally releases and adds phosphorous to stormwater. Therefore, compost blankets are not recommended for use in watersheds where phosphorous sensitive water resources are located. Unless prior approval is given by the County, they should not be used in Sensitive Lake Watersheds.

Conditions of Use

1. Compost blankets may be used unseeded on disturbed areas that require temporary cover measures up to 1 year. Compost applied as temporary cover may be reclaimed and re-used for permanent cover.
2. Compost provides cover for protecting final grades until landscaping can be completed as it can be directly seeded or tilled into soil as an amendment.
3. Compost blankets meet mulch requirements for seed.
4. Seed may be applied to a compost blanket at any time for permanent or temporary stabilization of disturbed areas. Seed may be applied prior to blanket application, on top of blankets, or injected and mixed into the compost as it is applied.
5. Compost blankets may be applied on slopes up to 2H:1V.

Design and Installation Specifications

1. Compost shall be applied at a minimum of 2 inches thick, unless otherwise directed by an ESC supervisor or King County. At an application of 2 inches, this will equal approximately 100 tons per acre (compost generally weighs approximately 800 lbs per cubic yard). Thickness shall be increased at the direction of the design engineer for disturbed areas in or near critical areas or other areas highly susceptible to erosion.
2. Compost shall meet criteria in WAC 173-350-220 (10) for Designation of Composted Materials.
3. Compost shall be obtained from a supplier meeting the requirements of WAC 173-350-220.
4. Compost blankets shall be applied over the top of the slope to which it is applied, to prevent water from running under the blanket
5. Compost blankets shall not be used in areas exposed to concentrated flow (e.g. channels, ditches, dikes)

Maintenance Standards

1. The specified thickness of the blanket/cover must be maintained.
2. Any areas that show signs of erosion must be re-mulched. If the erosion problem is drainage related, then the drainage problem must first be remedied and then the eroded area re-mulched.

Maintenance Standards

1. Compost berms shall be regularly inspected to make sure they retain their shape and allow adequate flow-through of stormwater.
2. When construction is completed on site, the berms shall be dispersed for incorporation into the soil or left on top of the site for final seeding to occur.
3. Any damage to berms must be repaired immediately. Damage includes flattening, compacting, rills, eroded areas due to overtopping.
4. If concentrated flows are evident uphill of the berm, the flows must be intercepted and conveyed to a sediment trap or pond.
5. The uphill side of the berm shall be inspected for signs of the berm clogging and acting as a barrier to flows and causing channelization of flows parallel to the berm. If this occurs, replace the berm or remove the trapped sediment.
6. Sediment that collects behind the berm must be removed when the sediment is more than 6 inches deep.

D.3.3.6 COMPOST SOCKS

Code: COSO Symbol:

Purpose

Compost socks reduce the transport of sediment from a construction site by providing a temporary physical barrier to sediment-laden water and reducing the runoff velocities of overland flow. Compost socks trap sediment by filtering water that passes through the sock and allows water to pond behind the sock, creating a settling area for solids. Organic materials in the compost also may reduce metal and petroleum hydrocarbon concentrations in construction runoff. Compost socks function similarly to compost berms; however, because the compost is contained in a mesh tube, they are appropriate for both concentrated flow and sheet flow. Compost socks may be used to channel concentrated flow on hard surfaces.

Conditions of Use

1. Compost socks may be used in areas requiring sediment or erosion control where runoff is in the form of sheet flow or in areas that silt fence is normally considered acceptable. Compost socks may also be used in sensitive environmental areas where migration of aquatic life, including turtles, salamanders and other aquatic life may be impeded by the used of silt fence.
2. Compost socks are not intended to treat substantial amounts of overland flow. However, compost socks may be subjected to some ponding and concentrated flows. If intended primarily as a filtration device, the socks should be sized and placed so that flows do not overtop the socks.
3. For purposes of long term sediment control objectives, compost socks may be seeded at the time of installation to create an additional vegetated filtering component.

Design and Installation Specifications

1. Compost socks shall be produced using a pneumatic blower hose or equivalent to fill a mesh tube with compost to create a uniform cross-section and berm density.
2. Socks shall be filled so they are firmly – packed yet flexible. Upon initial filling, the socks shall be filled to have a round cross-section. Once placed on the ground, it is recommended to apply weight to

the sock to improve contact with the underlying surface. This may cause the sock to assume an oval shape.

3. Compost socks shall be a minimum of 8 inches in diameter. Larger diameter socks are recommended for areas where ponding is expected behind the sock.
4. Compost socks shall not be used on slopes greater than 2H:1V.
5. Compost shall meet criteria in WAC 173-350-220 (10) for Designation of Composted Materials.
6. Compost shall be obtained from a supplier meeting the requirements of WAC 173-350-220.
7. Compost particle size distribution shall be as follows: 99% passing a 1 inch sieve, 90% passing a ¾ inch sieve and a minimum of 70% greater than the 3/8 inch sieve. A total of 98% shall not exceed 3 inches in length.
8. In order to prevent water from flowing around the ends of compost socks, the ends must be pointed upslope so the ends of the socks are at a higher elevation than the remainder of the sock.

Maintenance Standards

1. Compost socks shall be regularly inspected to make sure the mesh tube remains undamaged, the socks retain their shape, and allow adequate flow through of surface water. If the mesh tube is torn, it shall be repaired using twine, zip-ties, or wire. Large sections of damaged socks must be replaced. Any damage must be repaired immediately upon discovery of damage.
2. When the sock is no longer needed, the socks shall be cut open and the compost dispersed to be incorporated into the soil or left on top of the soil for final seeding to occur. The mesh material must be disposed of properly as solid waste. If spills of oil, antifreeze, hydraulic fluid, or other equipment fluids have occurred that have saturated the sock, the compost must be disposed of properly as a waste.
3. Sediment must be removed when sediment accumulations are within 3 inches of the top of the sock.

D.3.4 TRAFFIC AREA STABILIZATION

Unsurfaced entrances, roads, and parking areas used by construction traffic shall be stabilized to minimize erosion and tracking of sediment off site. Stabilized construction entrances shall be installed as the first step in clearing and grading. At the County's discretion, road and parking area stabilization is not required during the dry season (unless dust is a concern) or if the site is underlain by coarse-grained soils. Roads and parking areas shall be stabilized immediately after initial grading.

Purpose: The purpose of traffic area stabilization is to reduce the amount of sediment transported off site by construction vehicles and to reduce the erosion of areas disturbed by vehicle traffic. Sediment transported off site onto paved streets is a significant problem because it is difficult to effectively remove, and any sediment not removed ends up in the drainage system. Additionally, sediment on public right-of-way can pose a serious traffic hazard. Construction road and parking area stabilization is important because the combination of wet soil and heavy equipment traffic typically forms a slurry of easily erodible mud. Finally, stabilization also is an excellent form of dust control in the summer months.

When to Install: The construction entrance is to be installed as the first step in clearing and grading. Construction road stabilization shall occur immediately after initial grading of the construction roads and parking areas.

Measures to Use: There are two types of traffic area stabilization: (1) a stabilized construction entrance and (2) construction road/parking area stabilization. Both measures must be used as specified under "Conditions of Use" for each measure.

D.3.2.8 POLYACRYLAMIDE FOR SOIL EROSION PROTECTION

Purpose

Polyacrylamide (PAM) is used on construction sites to prevent soil erosion. Applying PAM to bare soil in advance of a rain event significantly reduces erosion and controls sediment in two ways. First, PAM increases the soil's available pore volume, thus increasing infiltration through flocculation and reducing the quantity of stormwater runoff. Second, it increases flocculation of suspended particles and aids in their deposition, thus reducing stormwater runoff turbidity and improving water quality.

Conditions of Use

1. PAM shall not be directly applied to water or allowed to enter a water body.
2. PAM may be applied to wet soil, but dry soil is preferred due to less sediment loss.
3. PAM will work when applied to saturated soil but is not as effective as applications to dry or damp soil.
4. PAM may be applied only to the following types of bare soil areas that drain to a sediment trap or a sediment pond:
   - Staging areas
   - Stockpiles
   - Pit sites
   - Balanced cut and fill earthwork
   - Haul roads prior to placement of crushed rock surfacing
   - Compacted soil road base
5. PAM may be applied only during the following phases of construction:
   - During rough grading operations
   - After final grade and before paving or final seeding and planting
   - During a winter shut down of site work. In the case of winter shut down, or where soil will remain unworked for several months, PAM should be used together with mulch.
6. Do not use PAM on a slope that flows directly to a stream or wetland. The stormwater runoff shall pass through a sediment control measure prior to discharging to surface waters.

Design and Installation Specifications

1. PAM must be applied using one of two methods of application, "preferred" or "alternative." The specifications for these methods are described under separate headings below.
2. PAM may be applied in dissolved form with water, or it may be applied in dry, granular or powdered form. The preferred application method is the dissolved form.
3. PAM is to be applied at a maximum rate of ½ pound PAM per 1000 gallons of water per 1 acre of bare soil. Table D.3.2.H may be used to determine the PAM and water application rate for disturbed soil areas. Higher concentrations of PAM **do not** provide any additional effectiveness.
4. Do not add PAM to water discharging from the site.
5. PAM shall be used in conjunction with other ESC measures and not in place of them. When the total drainage area is greater than or equal to 3 acres, PAM treated areas shall drain to a sediment pond per Section D.3.5.2. For drainage areas less than 3 acres, PAM treated areas must drain to a sediment trap per Section D.3.5.1. Other normally required sediment control measures such as perimeter protection

measures (Section D.3.3) and surface water collection measures (Section D.3.6) shall be applied to PAM treated areas.

6. All areas not being actively worked shall be covered and protected from rainfall. PAM shall not be the only cover BMP used.
7. Keep the granular PAM supply out of the sun. Granular PAM loses its effectiveness in three months after exposure to sunlight and air.
8. Care must be taken to prevent spills of PAM powder onto paved surfaces. PAM, combined with water, is very slippery and can be a safety hazard. During an application of PAM, prevent over-spray from reaching pavement as the pavement will become slippery. If PAM powder gets on skin or clothing, wipe it off with a rough towel rather than washing with water. Washing with water only makes cleanup more difficult, messier, and time consuming.
9. The specific PAM copolymer formulation must be anionic. Cationic PAM shall not be used in any application because of known aquatic toxicity concerns. Only the highest drinking water grade PAM, certified for compliance with ANSI/NSF Standard 60 for drinking water treatment, may be used for soil applications. The Washington State Department of Transportation (WSDOT) lists approved PAM products on their web page. All PAM use shall be reviewed and approved by DDES.
10. The PAM anionic charge density may vary from 2 – 30 percent; a value of 18 percent is typical. Studies conducted by the United States department of Agriculture (USDA)/ARS demonstrated that soil stabilization was optimized by using very high molecular weight (12 – 15 mg/mole), highly anionic (>20% hydrolysis) PAM.
11. PAM must be "water soluble" or "linear" or "non-cross-linked." Cross-linked or water absorbent PAM, polymerized in highly acidic (pH<2) conditions, are used to maintain soil moisture content.

TABLE D.3.2.H PAM AND WATER APPLICATION RATES

Disturbed Area (ac)	PAM (lbs)	Water (gal)
0.50	0.25	500
1.00	0.50	1,000
1.50	0.75	1,500
2.00	1.00	2,000
2.50	1.25	2,500
3.00	1.50	3,000
3.50	1.75	3,500
4.00	2.00	4,000
4.50	2.25	4,500
5.00	2.50	5,000

Preferred Application Method

1. Pre-measure the area where PAM is to be applied and calculate the amount of product and water necessary to provide coverage at the specified application rate (1/2 pound PAM/1,000 gallons/acre).
2. Dissolve pre-measured dry granular PAM with a known quantity of clean water in a bucket several hours or overnight. PAM has infinite solubility in water, but dissolves very slowly. Mechanical mixing will help dissolve PAM. Always add PAM to water – not water to PAM.
3. Pre-fill the water truck about 1/8 full with water. The water does not have to be potable, but it must have relatively low turbidity – in the range of 20 NTU or less.

4. Add PAM/Water mixture to the truck.
5. Completely fill the water truck to specified volume.
6. Spray PAM/Water mixture onto dry soil until the soil surface is uniformly and completely wetted.

Alternate Application Method

PAM may also be applied as a powder at the rate of 5 pounds per acre. This must be applied on a day that is dry. For areas less than 5-10 acres, a hand-held "organ grinder" fertilized spreader set to the smallest setting will work. Tractor mounted spreaders will work for larger areas.

Maintenance Standards

1. PAM may be reapplied on actively worked areas after a 48-hour period
2. Reapplication is not required unless PAM treated soil is disturbed or unless turbidity levels show the need for an additional application. If PAM treated soil is left undisturbed, a reapplication may be necessary after two months. More PAM applications may be required for steep slopes, silty and clay soils, (USDA classification Type "C" and "D" soils), long grades, and high precipitation areas. When PAM is applied first to bare soil and then covered with straw, a reapplication may not be necessary for several months.

D.3.2.9 COMPOST BLANKETS

Code: COBL Symbol:

Purpose

Compost blankets are intended to:

- Provide immediate temporary protection from erosion by protecting soil from rainfall and slowing flow velocity over the soil surface.
- Enhance temporary or permanent plant establishment by conserving moisture, holding seed and topsoil in place, providing nutrients and soil microorganisms, and moderating soil temperatures.
- Compost blankets, applied at the proper thickness and tilled into the soil, are also an option for amending soils for permanent landscaping.
- Compost generally releases and adds phosphorous to stormwater. Therefore, compost blankets are not recommended for use in watersheds where phosphorous sensitive water resources are located. Unless prior approval is given by the County, they should not be used in Sensitive Lake Watersheds.

Conditions of Use

1. Compost blankets may be used unseeded on disturbed areas that require temporary cover measures up to 1 year. Compost applied as temporary cover may be reclaimed and re-used for permanent cover.
2. Compost provides cover for protecting final grades until landscaping can be completed as it can be directly seeded or tilled into soil as an amendment.
3. Compost blankets meet mulch requirements for seed.
4. Seed may be applied to a compost blanket at any time for permanent or temporary stabilization of disturbed areas. Seed may be applied prior to blanket application, on top of blankets, or injected and mixed into the compost as it is applied.
5. Compost blankets may be applied on slopes up to 2H:1V.

D.3.3.3 VEGETATED STRIP

Code: VS Symbol: 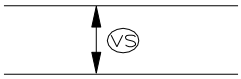

Purpose

Vegetated strips reduce the transport of coarse sediment from a construction site by providing a temporary physical barrier to sediment and reducing the runoff velocities of overland flow.

Conditions of Use

1. Vegetated strips may be used downslope of all disturbed areas.
2. Vegetated strips are not intended to treat concentrated flows, nor are they intended to treat substantial amounts of overland flow. Any concentrated flows must be conveyed through the drainage system to a sediment trap or pond. The only circumstance in which overland flow may be treated solely by a strip, rather than by a sediment trap or pond, is when the area draining to the strip is small (see "Criteria for Use as Primary Treatment" on page D-30).

Design and Installation Specifications

1. The vegetated strip shall consist of a 25-foot minimum width continuous strip of dense vegetation with a permeable topsoil. Grass-covered, landscaped areas are generally not adequate because the volume of sediment overwhelms the grass. Ideally, vegetated strips shall consist of undisturbed native growth with a well-developed soil that allows for infiltration of runoff.
2. The slope within the strip shall not exceed 4H:1V.
3. The uphill boundary of the vegetated strip shall be delineated with clearing limits as specified in Section D.3.1 (p. D-8).

Maintenance Standards

1. Any areas damaged by erosion or construction activity shall be seeded immediately and protected by mulch.
2. If more than 5 feet of the original vegetated strip width has had vegetation removed or is being eroded, sod must be installed using the standards for installation found in Section D.4.2.5.

If there are indications that concentrated flows are traveling across the buffer, surface water controls must be installed to reduce the flows entering the buffer, or additional perimeter protection must be installed.

D.3.3.4 TRIANGULAR SILT DIKE (GEOTEXTILE ENCASED CHECK DAM)

Code: TSD Symbol:

Purpose

Triangular silt dikes (TSDs) may be used as check dams, for perimeter protection, for temporary soil stockpile protection, for drop inlet protection, or as a temporary interceptor dike. Silt dikes, if attached to impervious surfaces with tack or other adhesive agent may also be used as temporary wheel wash areas, or concrete washout collection areas.

Conditions of Use

1. May be used for temporary check dams in ditches.

2. May be used on soil or pavement with adhesive or staples.
3. TSDs have been used to build temporary sediment ponds, diversion ditches, concrete washout facilities, curbing, water bars, level spreaders, and berms.

Design and Installation Specifications

1. TSDs must be made of urethane foam sewn into a woven geosynthetic fabric.
2. TSDs are triangular, 10 inches to 14 inches high in the center, with a 20-inch to 28-inch base. A 2-foot apron extends beyond both sides of the triangle along its standard section of 7 feet. A sleeve at one end allows attachment of additional sections as needed
3. Install TSDs with ends curved up to prevent water from flowing around the ends
4. Attach the TSDs and their fabric flaps to the ground with wire staples. Wire staples must be No. 11 gauge wire or stronger and shall be 200 mm to 300 mm in length.
5. When multiple units are installed, the sleeve of fabric at the end of the unit shall overlap the abutting unit and be stapled.
6. TSDs must be located and installed as soon as construction will allow.
7. TSDs must be placed perpendicular to the flow of water.
8. When used as check dams, the leading edge must be secured with rocks, sandbags, or a small key slot and staples.
9. When used in grass-lined ditches and swales, the TSD check dams and accumulated sediment shall be removed when the grass has matured sufficiently to protect the ditch or swale unless the slope of the swale is greater than 4 percent. The area beneath the TSD check dams shall be seeded and mulched immediately after dam removal.

Maintenance Standards

1. Triangular silt dikes shall be monitored for performance and sediment accumulation during and after each runoff producing rainfall event. Sediment shall be removed when it reaches one half the height of the silt dike.
2. Anticipate submergence and deposition above the triangular silt dike and erosion from high flows around the edges of the dike/dam. Immediately repair any damage or any undercutting of the dike/dam.

D.3.3.5 COMPOST BERMS

Code: COBE Symbol:

Purpose

Compost berms are an option to meet the requirements of perimeter protection. Compost berms may reduce the transport of sediment from a construction site by providing a temporary physical barrier to sediment and reducing the runoff velocities of overland flow. Compost berms trap sediment by filtering water passing through the berm and allowing water to pond, creating a settling area for solids behind the berm. Organic materials in the compost can also reduce concentrations of metals and petroleum hydrocarbons from construction runoff. Due to the increase in phosphorous seen in the effluent data from compost berms, they should be used with some cautions in areas that drain to phosphorus sensitive water bodies, and should only be used in Sensitive Lake watersheds, such as Lake Sammamish, with the approval from the County or the local jurisdiction.

2. After adequate cover is achieved, any areas that experience erosion shall be re-seeded and protected by mulch. If the erosion problem is drainage related, the problem shall be fixed and the eroded area re-seeded and protected by mulch.
3. Seeded areas shall be supplied with adequate moisture, but not watered to the extent that it causes runoff.

D.3.2.7 SODDING

Code: SO Symbol:

Purpose

The purpose of sodding is to establish permanent turf for immediate erosion protection and to stabilize drainage ways where concentrated overland flow will occur.

Conditions of Use

Sodding may be used in the following areas:

1. Disturbed areas that require short-term or long-term cover
2. Disturbed areas that require immediate vegetative cover
3. All waterways that require vegetative lining (except biofiltration swales—the seed mix used in most sod is not appropriate for biofiltration swales). Waterways may also be seeded rather than sodded, and protected with a net or blanket (see Section D.3.2.3).

Design and Installation Specifications

Sod shall be free of weeds, of uniform thickness (approximately 1-inch thick), and shall have a dense root mat for mechanical strength.

The following steps are recommended for sod installation:

1. Shape and smooth the surface to final grade in accordance with the approved grading plan.
2. Amend two inches (minimum) of well-rotted compost into the top six inches of the soil if the organic content of the soil is less than ten percent. Compost used should meet Ecology publication 98-38 specifications for Grade A quality compost.
3. Fertilize according to the supplier's recommendations. Disturbed areas within 200 feet of water bodies and wetlands must use non-phosphorus fertilizer.
4. Work lime and fertilizer 1 to 2 inches into the soil, and smooth the surface.
5. Lay strips of sod beginning at the lowest area to be sodded and perpendicular to the direction of water flow. Wedge strips securely into place. Square the ends of each strip to provide for a close, tight fit. Stagger joints at least 12 inches. Staple on slopes steeper than 3H:1V.
6. Roll the sodded area and irrigate.
7. When sodding is carried out in alternating strips or other patterns, seed the areas between the sod immediately after sodding.

Maintenance Standards

If the grass is unhealthy, the cause shall be determined and appropriate action taken to reestablish a healthy groundcover. If it is impossible to establish a healthy groundcover due to frequent saturation, instability, or some other cause, the sod shall be removed, the area seeded with an appropriate mix, and protected with a net or blanket.

Design and Installation Specifications

1. The fence shall be designed and installed according to the manufacturer's specifications.
2. The fence shall be at least 3 feet high and must be highly visible.
3. The fence shall not be wired or stapled to trees.

Maintenance Requirements

1. If the fence has been damaged or visibility reduced, it shall be repaired or replaced immediately and visibility restored.
2. Disturbance of a critical area, critical area buffer, native growth retention area, or any other area required to be left undisturbed shall be reported to the County for resolution.

D.3.1.2 STAKE AND WIRE FENCE

Code: SWF Symbol:

Purpose

Fencing is intended to (1) restrict clearing to approved limits; (2) prevent disturbance of critical areas, their buffers, and other areas required to be left undisturbed; (3) limit construction traffic to designated construction entrances or roads; and (4) protect any areas where marking with survey tape may not provide adequate protection.

Conditions of Use

To establish clearing limits, stake or wire fence may be used:

1. At the boundary of critical areas, their buffers, and other areas required to be left uncleared.
2. As necessary, to control vehicle access to and on the site (see Sections D.3.4.1 and D.3.4.2).

Design and Installation Specifications

See Figure D.3.1.A for details.

Maintenance Requirements

1. If the fence has been damaged or visibility reduced, it shall be repaired or replaced immediately and visibility restored.
2. Disturbance of a critical area, critical area buffer, native growth retention area, or other area required to be left undisturbed shall be reported to the County for resolution.
3. The County may require more substantial fencing if the fence does not prevent encroachment into those areas that are not to be disturbed.

FIGURE D.3.1.A STAKE AND WIRE FENCE

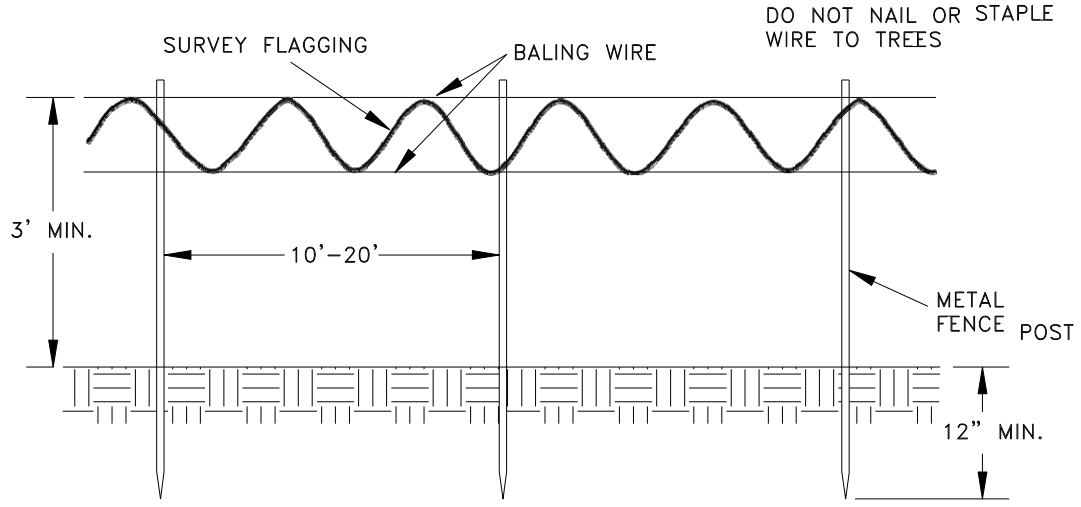

D.3.2 COVER MEASURES

Temporary and permanent cover measures shall be provided to protect all disturbed areas, including the faces of cut and fill slopes. Temporary cover shall be installed if an area is to remain unworked for more than seven days during the dry season (May 1 to September 30) or for more than two consecutive working days during the wet season (October 1 to April 30). These time limits may be relaxed if an area poses a low risk of erosion due to soil type, slope gradient, anticipated weather conditions, or other factors. Conversely, the County may reduce these time limits if site conditions warrant greater protection (e.g., adjacent to significant aquatic resources or highly erosive soils) or if significant precipitation (see Section D.5.2) is expected. Any area to remain unworked for more than 30 days shall be seeded or sodded, unless the County determines that winter weather makes vegetation establishment infeasible. During the wet season, slopes and stockpiles at 3H:1V or steeper and with more than ten feet of vertical relief shall be covered if they are to remain unworked for more than 12 hours. Also during the wet season, the material necessary to cover all disturbed areas must be stockpiled on site. The intent of these cover requirements is to have as much area as possible covered during any period of precipitation.

Purpose: The purpose of covering exposed soils is to prevent erosion, thus reducing reliance on less effective methods that remove sediment after it is entrained in runoff. Cover is the only practical method of reducing turbidity in runoff. Structural measures, such as silt fences and sediment ponds, are only capable of removing coarse particles and in most circumstances have little to no effect on turbidity.

When to Install: Any exposed soils that will remain unworked for more than the time limit set above shall be covered by the end of the working day. If the exposed area is to remain unworked for more than 30 days, the area shall be seeded with the temporary seed mix or an equivalent mix that will provide rapid protection (see Section D.3.2.5). If the disturbed area is to remain unworked for a year or more or if the area has reached final grade, permanent seed mix or an equivalent mix shall be applied.

Measures to Use: Cover methods include the use of surface roughening, mulch, erosion control nets and blankets, plastic covering, seeding, and sodding. Mulch and plastic sheeting are primarily intended to protect disturbed areas for a short period of time, typically days to a few months. Seeding and sodding are measures for areas that are to remain unworked for months. Erosion nets and blankets are to be used in conjunction with seeding steep slopes. The choice of measures is left to the designer; however, there are restrictions on the use of these methods, which are listed in the "Conditions of Use" and the "Design and Installation Specifications" sections for each measure.

The methods listed are by no means exhaustive. Variations on the standards presented here are encouraged if other cost-effective products or methods provide substantially equivalent or superior performance. Also, the details of installation can, and should, vary with the site conditions. A useful reference on the application of cover measures in the Puget Sound area is Horner, Guedrey, and Kortenhof (1990).

D.3.2.1 SURFACE ROUGHENING

Purpose

The purpose of surface roughening is to aid in the establishment of vegetative cover and to reduce runoff velocity, increase infiltration, and provide for sediment trapping through the provision of a rough soil surface. The rough soil surface may be created by operating a tiller or other equipment on the contour to form horizontal depressions or by leaving slopes in a roughened condition by not fine grading.

Conditions of Use

1. All slopes steeper than 3:1 and greater than 5 vertical feet require surface roughening.
2. Areas with grades steeper than 3:1 should be roughened to a depth of 2 to 4 inches prior to seeding.
3. Areas that will not be stabilized immediately may be roughened to reduce runoff velocity until seeding takes place.
4. Slopes with a stable rock face do not require roughening.
5. Slopes where mowing is planned should not be excessively roughened.

Design and Installation Specifications

There are different methods for achieving a roughened soil surface on a slope, and the selection of an appropriate method depends upon the type of slope. Roughening methods include stair-step grading, grooving, contour furrows, and tracking. See Figure D.3.2.A for information on tracking and contour furrows. Factors to be considered in choosing a method are slope steepness, mowing requirements, and whether the slope is formed by cutting or filling. Sole reliance on roughening for temporary erosion control is of limited effectiveness in intense rainfall events. Stair-step grading may not be practical for sandy, steep, or shallow soils.

1. Disturbed areas that will not require mowing may be stair-step graded, grooved, or left rough after filling
2. Stair Step grading is particularly appropriate in soils containing large amounts of soft rock. Each "step" catches material that sloughs from above, and provides a level site where vegetation can become established. Stairs should be wide enough to work with standard earth moving equipment. Stair steps must be on contour or gullies will form on the slope.
3. Areas that will be mowed (slopes less steep than 3:1) may have small furrows left by disking, harrowing, raking, or seed-planting machinery operated on the contour.
4. Graded areas with slopes greater than 3:1 but less than 2:1 should be roughened before seeding. This can be accomplished in a variety of ways, including "track walking" or driving a crawler tractor up and down the slope, leaving a pattern of cleat imprints parallel to slope contours.
5. Tracking is done by operating equipment up and down the slope to leave horizontal depressions in the soil.

Maintenance Standards

Periodically check roughened, seeded, planted, and mulched slopes for rills and gullies, particularly after a significant storm event. Fill these areas slightly above the original grade, then re-seed and mulch as soon as possible.

FIGURE D.3.2.A SURFACE ROUGHING

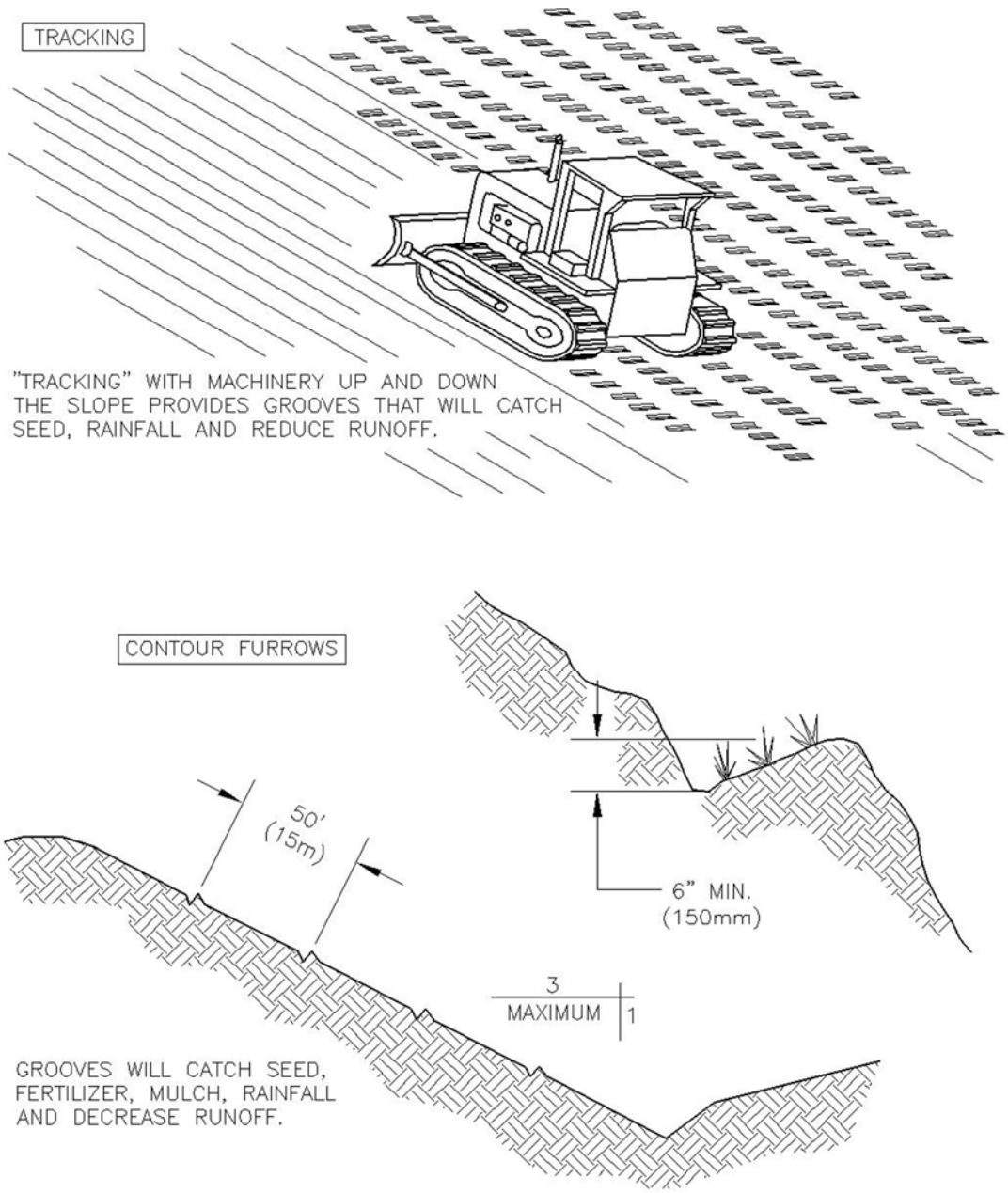

SURFACE ROUGHENING BY TRACKING AND CONTOUR FURROWS

D.3.3.3 VEGETATED STRIP

Code: VS Symbol: 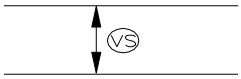

Purpose

Vegetated strips reduce the transport of coarse sediment from a construction site by providing a temporary physical barrier to sediment and reducing the runoff velocities of overland flow.

Conditions of Use

1. Vegetated strips may be used downslope of all disturbed areas.
2. Vegetated strips are not intended to treat concentrated flows, nor are they intended to treat substantial amounts of overland flow. Any concentrated flows must be conveyed through the drainage system to a sediment trap or pond. The only circumstance in which overland flow may be treated solely by a strip, rather than by a sediment trap or pond, is when the area draining to the strip is small (see "Criteria for Use as Primary Treatment" on page D-30).

Design and Installation Specifications

1. The vegetated strip shall consist of a 25-foot minimum width continuous strip of dense vegetation with a permeable topsoil. Grass-covered, landscaped areas are generally not adequate because the volume of sediment overwhelms the grass. Ideally, vegetated strips shall consist of undisturbed native growth with a well-developed soil that allows for infiltration of runoff.
2. The slope within the strip shall not exceed 4H:1V.
3. The uphill boundary of the vegetated strip shall be delineated with clearing limits as specified in Section D.3.1 (p. D-8).

Maintenance Standards

1. Any areas damaged by erosion or construction activity shall be seeded immediately and protected by mulch.
2. If more than 5 feet of the original vegetated strip width has had vegetation removed or is being eroded, sod must be installed using the standards for installation found in Section D.4.2.5.

If there are indications that concentrated flows are traveling across the buffer, surface water controls must be installed to reduce the flows entering the buffer, or additional perimeter protection must be installed.

D.3.3.4 TRIANGULAR SILT DIKE (GEOTEXTILE ENCASED CHECK DAM)

Code: TSD Symbol:

Purpose

Triangular silt dikes (TSDs) may be used as check dams, for perimeter protection, for temporary soil stockpile protection, for drop inlet protection, or as a temporary interceptor dike. Silt dikes, if attached to impervious surfaces with tack or other adhesive agent may also be used as temporary wheel wash areas, or concrete washout collection areas.

Conditions of Use

1. May be used for temporary check dams in ditches.

D.3.4.3 WHEEL WASH

Code: WW Symbol:

Purpose

Wheel wash systems reduce the amount of sediment transported onto paved roadways and into surface water systems by construction vehicles.

Conditions of Use

When a stabilized construction entrance is not preventing sediment from being tracked onto pavement:

- Wheel washing is generally an effective erosion and sediment control method and BMP when installed with careful attention to topography. For example, a wheel wash can be detrimental if installed at the top of a slope abutting a right-of-way where the water from the dripping truck wheels and undercarriage can run unimpeded into the street.
- Pressure washing combined with an adequately sized and properly surfaced wash pad with direct drainage discharge to a large 10 foot x 10-foot sump can be very effective.

Design and Installation Specifications

A suggested detail is shown in Figure D.3.4.B.

1. A minimum of 6inches of asphalt treated base (ATB) over crushed base material or 8 inches over a good subgrade is recommended to pave the wheel wash area.
2. Use a low clearance truck to test the wheel wash before paving. Either a belly dump or lowboy will work well to test clearance.
3. Keep the water level from 12 to 14 inches deep to avoid damage to truck hubs and filling the truck tongues with water.
4. Midpoint spray nozzles are only needed in very muddy conditions.
5. Wheel wash systems should be designed with a small grade change, 6 to 12 inches for a 10-foot wide pond, to allow sediment to flow to the low side of the pond and to help prevent re-suspension of sediment.
6. A drainpipe with a 2 to 3 foot riser should be installed on the low side of the wheel wash pond to allow for easy cleaning and refilling. Polymers may be used to promote coagulation and flocculation in a closed-loop system.
7. Polyacrylamide (PAM) added to the wheel washwater at a rate of 0.25 – 0.5 pounds per 1,000 gallons of water increases effectiveness and reduces cleanup time. If PAM is already being used for dust or erosion control and is being applied by a water truck, the same truck may be used to change the washwater.

Maintenance Standards

1. The wheel wash should start out each day with clean, fresh water.
2. The washwater should be changed a minimum of once per day. On large earthwork jobs where more than 10-20 trucks per hour are expected, the washwater will need to be changed more often.
3. Wheel wash or tire bath wastewater shall be discharged to a separate on-site treatment system, such as a closed-loop recirculation system or land application, or to the sanitary sewer system with proper local sewer district approval or permits.

FIGURE D.3.4.B WHEEL WASH AND PAVED CONSTRUCTION ENTRANCE

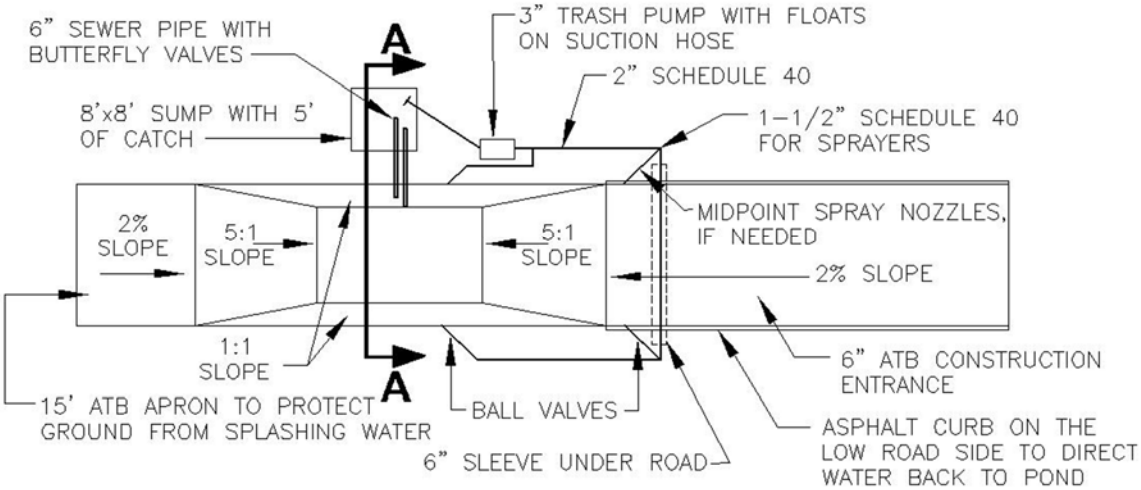

PLAN VIEW

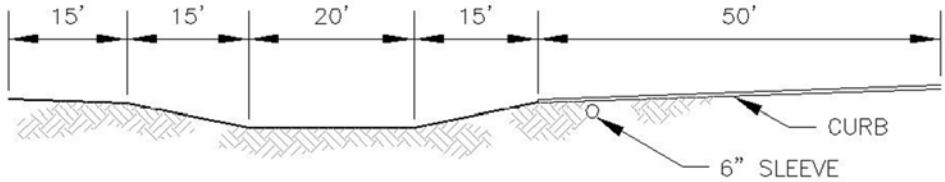

ELEVATION VIEW

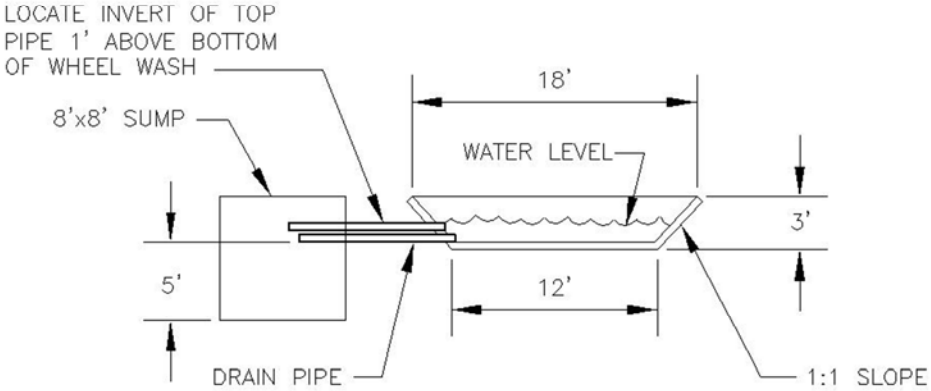

SECTION A–A

NOTES:

1. BUILD 8'x8' SUMP TO ACCOMODATE CLEANING BY TRACKHOE.

WHEEL WASH

Attachment D
Site Inspection Forms and Site Log

The results of each inspection shall be summarized in an inspection report or checklist that is entered into or attached to the site log book. It is suggested that the inspection report or checklist be included in this attachment to keep monitoring and inspection information in one document, but this is optional. However, it is mandatory that this SWPPP and the site inspection forms be kept on site at all times during construction, and that inspections be performed and documented as outlined below.

At a minimum, each inspection report or checklist shall include the following:

1. Inspection date/times
2. Weather information: general conditions during inspection, approximate amount of precipitation since the last inspection, and approximate amount of precipitation within the last 24 hours
3. A summary or list of all BMPs that have been implemented, including observations of all erosion/sediment control structures or practices
4. The following shall be noted:
    a. Locations of BMPs inspected
    b. Locations of BMPs that need maintenance
    c. The reason maintenance is needed
    d. Locations of BMPs that failed to operate as designed or intended
    e. Locations where additional or different BMPs are needed, and the reason(s) why
    f. A description of stormwater discharged from the site; the presence of suspended sediment, turbid water, discoloration, and/or oil sheen shall be noted, as applicable
    g. A description of any water quality monitoring performed during inspection, and the results of that monitoring
    h. General comments and notes, including a brief description of any BMP repairs, maintenance or installations made as a result of the inspection
    i. A statement that, in the judgment of the person conducting the site inspection, the site is either in compliance or out of compliance with the terms and conditions of the SWPPP and the NPDES permit. If the site inspection indicates that the site is out of compliance, the inspection report shall include a summary of the remedial actions required to bring the site back into compliance, as well as a schedule of implementation
    j. Name, title, and signature of person conducting the site inspection; and the following statement: "I certify under penalty of law that this report is true, accurate, and complete, to the best of my knowledge and belief"

When the site inspection indicates that the site is not in compliance with any terms and conditions of the NPDES permit, the Permittee shall take immediate action(s) to stop, contain, and clean up the

unauthorized discharges or otherwise stop the non-compliance; correct the problem(s); implement appropriate BMPs and/or conduct maintenance of existing BMPs; and achieve compliance with all applicable standards and permit conditions. In addition, if the non-compliance causes a threat to human health or the environment, the Permittee shall comply with the non-compliance notification requirements in Special Condition S5.F of the permit.

Construction Stormwater Site Inspection Form

Project Name: Brink Park Permit #_____ Inspection Date _____ Time _____

Name of Certified Erosion Sediment Control Lead (CESCL) or qualified inspector if *less than one acre*
Print Name: _____

Approximate rainfall amount since the last inspection (in inches): _____

Approximate rainfall amount in the last 24 hours (in inches): _____

Current Weather Clear ☐ Cloudy ☐ Mist ☐ Rain ☐ Wind ☐ Fog ☐

A. Type of inspection: Weekly ☐ Post Storm Event ☐ Other ☐

B. Phase of Active Construction (*check all that apply*):

Pre-Construction/installation of erosion/sediment controls	☐	Clearing/Demo/Grading	☐	Infrastructure/storm/roads	☐
Concrete pours	☐	Vertical Construction/buildings	☐	Utilities	☐
Offsite improvements	☐	Site temporary stabilized	☐	Final stabilization	☐

C. Questions:

1. Were all areas of construction and discharge points inspected? Yes __ No _
2. Was the in-water turbidity curtain perimeter inspected? Yes __ No _
3. Did you observe the presence of suspended sediment, turbidity, discoloration, or oil sheen Yes __ No _
4. Was a water quality sample taken during inspection? (*refer to permit conditions S4 & S5*) Yes __ No _
5. Was there a turbid discharge 250 NTU or greater, or Transparency 6 cm or less?* Yes __ No _
6. If yes to #4 was it reported to Ecology? Yes __ No _
7. Is pH sampling required? pH range required is 6.5 to 8.5. Yes __ No _

If answering yes to a discharge, describe the event. Include when, where, and why it happened; what action was taken, and when.

_____

_____

_____

*If answering yes to # 4 record NTU/Transparency with continual sampling daily until turbidity is 25 NTU or less/ transparency is 33 cm or greater.

Sampling Results: Date: _____

Parameter	Method (circle one)	Result			Other/Note
		NTU	cm	pH	
Turbidity	tube, meter, laboratory				
pH	Paper, kit, meter				

D. Check the observed status of all items. Provide "Action Required "details and dates.

Element #	Inspection	BMPs Inspected			BMP needs maintenance	BMP failed	Action required (describe in section F)
		yes	no	n/a			
1 Clearing Limits	Before beginning land disturbing activities are all clearing limits, natural resource areas (streams, wetlands, buffers, trees) protected with barriers or similar BMPs? (high visibility recommended)						
2 Construction Access	Construction access is stabilized with quarry spalls or equivalent BMP to prevent sediment from being tracked onto roads?						
	Sediment tracked onto the road way was cleaned thoroughly at the end of the day or more frequent as necessary.						
3 Control Flow Rates	Are flow control measures installed to control stormwater volumes and velocity during construction and do they protect downstream properties and waterways from erosion?						
	If permanent infiltration ponds are used for flow control during construction, are they protected from siltation?						
4 Sediment Controls	All perimeter sediment controls (e.g. silt fence, wattles, compost socks, berms, etc.) installed, and maintained in accordance with the Stormwater Pollution Prevention Plan (SWPPP).						
	Sediment control BMPs (sediment ponds, traps, filters etc.) have been constructed and functional as the first step of grading.						
	Stormwater runoff from disturbed areas is directed to sediment removal BMP.						
5 Stabilize Soils	Have exposed un-worked soils been stabilized with effective BMP to prevent erosion and sediment deposition?						

Construction Stormwater Site Inspection Form

Element #	Inspection	BMPs Inspected			BMP needs maintenance	BMP failed	Action required (describe in section F)
		yes	no	n/a			
5 Stabilize Soils Cont.	Are stockpiles stabilized from erosion, protected with sediment trapping measures and located away from drain inlet, waterways, and drainage channels?						
	Have soils been stabilized at the end of the shift, before a holiday or weekend if needed based on the weather forecast?						
6 Protect Slopes	Has stormwater and ground water been diverted away from slopes and disturbed areas with interceptor dikes, pipes and or swales?						
	Is excavated material placed on uphill side of trenches consistent with safety and space considerations?						
7 Drain Inlets	Are existing storm drains within the influence of the project protected?						
8 Stabilize Channel and Outlets	Have all on-site conveyance channels been designed, constructed and stabilized to prevent erosion from expected peak flows?						
	Is stabilization, including armoring material, adequate to prevent erosion of outlets, adjacent stream banks, slopes and downstream conveyance systems?						
9 Control Pollutants	Are waste materials and demolition debris handled and disposed of to prevent contamination of stormwater?						
	Has cover been provided for all chemicals, liquid products, petroleum products, and other material?						
	Has secondary containment been provided capable of containing 110% of the volume?						
	Were contaminated surfaces cleaned immediately after a spill incident?						
	Were BMPs used to prevent contamination of stormwater by a pH modifying sources?						

Construction Stormwater Site Inspection Form

Element #	Inspection	BMPs Inspected			BMP needs maintenance	BMP failed	Action required (describe in section F)
		yes	no	n/a			
9 Cont.	Wheel wash wastewater is handled and disposed of properly.						
10 Control Dewatering	Concrete washout in designated areas. No washout or excess concrete on the ground.						
	Dewatering has been done to an approved source and in compliance with the SWPPP.						
	Were there any clean non turbid dewatering discharges?						
11 Maintain BMP	Are all temporary and permanent erosion and sediment control BMPs maintained to perform as intended?						
12 Maintain In-Water Turbidity Curtain	Has the entire perimeter of the turbidity curtain been inspected and maintained to perform as intended?						
13 Manage the Project	Has the project been phased to the maximum degree practicable?						
	Has regular inspection, monitoring and maintenance been performed as required by the permit?						
	Has the SWPPP been updated, implemented and records maintained?						
14 Protect LID	No LID Facilities were identified on the Project site.						

E. Check all areas that have been inspected. ✔

All in place BMPs ☐ All disturbed soils ☐ All concrete wash out area ☐ All material storage areas ☐
All discharge locations ☐ All equipment storage areas ☐ All construction entrances/exits ☐

F. Elements checked "Action Required" (section D) describe corrective action to be taken. List the element number; be specific on location and work needed. Document, initial, and date when the corrective action has been completed and inspected.

Element #	Description and Location	Action Required	Completion Date	Initials

Attach additional page if needed

Sign the following certification:

"I certify that this report is true, accurate, and complete, to the best of my knowledge and belief"

Inspected by: (print) _____ (Signature) _____ Date: _____

Title/Qualification of Inspector: _

Attachment E
303(d) List Waterbodies and TMDL Waterbodies Information

Listing ID: 12206

Main Listing Information

Listing ID: 12206
Waterbody Name: WASHINGTON LAKE
Medium: Water
Parameter: Bacteria
WQI Project: None Assigned
Designated Use: None Assigned

2014 Category: 5
2012 Category: 5
2008 Category: 5
2004 Category: 5
On 1998 303(d) List?: Y
On 1996 303(d) List?: Y

Assessment Unit

Assessment Unit ID: 47122G2H0

Location Identification

Counties: King
WRIA: 8 - Cedar-Sammamish
Waterbody ID (WBID): WA-08-9350
Waterbody Class: LAK
Town/Range/Section (Legacy): None Assigned

Basis

King County unpublished data from station A422SB show a geometric mean of 74 cfu/100mL with 45% exceeding the percentile criterion during 1998. King County unpublished data from station A422SB show a geometric mean of 23 cfu/100mL with 0% exceeding the percentile criterion during 1999.

Remarks

No Remarks Entered

EIM

No EIM Records Entered

APPENDIX F:
CRITICAL AREAS REPORT

City of Kirkland

April 2020
David E. Brink Park Shoreline Renovation Project

Critical Areas Report

Prepared for City of Kirkland Parks and Community Services and Public Works Departments

April 2020
David E. Brink Park Shoreline Renovation Project

Critical Areas Report

Prepared for
City of Kirkland Parks and Community Services and Public Works Departments
123 5th Avenue
Kirkland, Washington 98033-6189

Prepared by
Anchor QEA, LLC
1201 3rd Avenue, Suite 2600
Seattle, Washington 98101

Project Number: 191006-01.02

TABLE OF CONTENTS

1 Introduction 1

1.1 Statement of Accuracy 2

1.2 Review of Existing Information 2

2 Study Area Description 4

2.1 Topography 4

2.2 Soils 4

2.3 Hydrology 4

2.1 Plant Communities 5

3 Critical Areas Assessment 6

3.1 Methods 6

3.2 Wetlands 6

3.3 Streams 6

3.4 Fish and Wildlife Habitat Conservation Areas 7

3.4.1 Vegetation 7

3.4.2 Wildlife and Habitat 8

3.4.3 Lake Washington 8

3.4.4 Priority Species and Habitats 8

3.4.5 ESA-Listed Species and Critical Habitat 9

3.5 Frequently Flooded Areas 11

4 Critical Areas Impact Assessment 12

4.1 Fish and Wildlife Habitat Conservation Areas Assessment 12

5 References 14

TABLES

Table 1 Federally Listed Species that May Occur in the Study Area, with their ESA and Critical Habitat Status 10

Table 2 Federally Listed Species with Life History and Habitat Requirements that Do Not Occur in the Study Area, with their ESA and Critical Habitat Status 11

FIGURES

Figure 1 Vicinity Map
Figure 2 Aerial Photograph of Study Area
Figure 3 USDA NRCS Soils
Figure 4 National Wetlands Inventory

APPENDICES

Appendix A Project Description and Plan Set
Appendix B Restoration and Permitting Program Documentation

ABBREVIATIONS

ADA	Americans with Disabilities Act
CAR	Critical Areas Report
City	City of Kirkland
DPS	distinct population segment
ESA	Endangered Species Act
ESU	evolutionarily significant unit
FEMA	Federal Emergency Management Agency
KZC	Kirkland Zoning Code
NAVD88	North American Vertical Datum of 1988
NMFS	National Marine Fisheries Service
NRCS	Natural Resources Conservation Service
OHWM	ordinary high water mark
Park	David E. Brink Park
PHS	Priority Habitats and Species
Project	David E. Brink Park Shoreline Renovation Project
RAP	Restoration and Permitting
USACE	U.S. Army Corps of Engineers
USFWS	U.S. Fish and Wildlife Service
WDFW	Washington Department of Fish and Wildlife

1 Introduction

The City of Kirkland (City) Parks and Community Services Department is proposing to repair aging shoreline infrastructure and provide habitat enhancements as part of the David E. Brink Park Shoreline Renovation Project (Project). The Project is located at David E. Brink Park (Park) on Lake Washington at 555 Lake Street South in Kirkland, King County, Washington (Township 25 North, Range 5 East, Section 8). The Project will address safety issues along the shoreline through a combination of repair, replacement, and removal of existing shoreline protection features as recommended in the *David Brink Park Shoreline Renovation Existing Information Summary Report* (Anchor QEA 2019). The project will also enhance user experience by providing new access pathways that meet Americans with Disabilities Act (ADA) requirements. A vicinity map is shown in Figure 1 and an aerial photograph of the Project area is shown in Figure 2.

Proposed activities include the following:

- Removing and replacing a portion of the concrete bulkhead with a vinyl sheetpile wall with concrete cap at the north end and basalt rockery at the south end of the Park
- Removing and replacing the shoreline water access stairs south of the existing pier with a shorter stair feature
- Replacing the existing pier timber decking with a new grated decking
- Installing terraced rock walls, rock revetment, and vegetated areas behind the south end rockery with native low shoreline plantings
- Removing existing derelict piling near the shoreline
- Creating two new pocket beaches with native shoreline plantings
- Placing habitat gravel waterward of the shoreline protection features and pocket beaches
- Constructing ADA-compliant public access pathways

The Project Description and plan set, included in Appendix A, provide additional detail about the proposed Project activities.

This Critical Areas Report (CAR) has been prepared by Anchor QEA ecologists to support the local permitting and land use review of the Project. The CAR evaluates the presence of critical areas within the Project area and potential impacts to existing critical areas and associated regulated buffers as defined in the City of Kirkland Zoning Code (KZC) Chapter 90 (City of Kirkland 2020a). The format of this report has been prepared consistent with KZC 90.110. Critical areas regulated under KZC Chapter 90 include wetlands, streams, fish and wildlife habitat conservation areas, frequently flooded areas, and minor lakes.

Project ecologists gathered and reviewed existing information consistent with KZC Chapter 90 to identify and assess existing critical areas. To support this review, Anchor QEA ecologists performed a critical areas site visit at the Park on March 11, 2019. In addition to this CAR, several Project

documents have been prepared that describe the Project area and proposed Project elements and evaluate potential Project impacts. As described in Section 3, the assessment for Endangered Species Act (ESA)-listed species and critical habitats for this Project was performed under the Restoration and Permitting (RAP) program. Information from these companion documents is summarized or included by reference in this CAR. The companion documents include the following:

- *David Brink Park Shoreline Renovation Existing Information Summary Report* (Anchor QEA 2019)
- Project Description and plan set (Appendix A)
- Project RAP program documentation for ESA compliance (Appendix B)

A State Environmental Policy Act Checklist has also been prepared for the Project and is included with this CAR. This CAR is organized as follows:

- Section 1: Introduction
- Section 2: Study Area Description
- Section 3: Critical Areas Assessment
- Section 4: Critical Areas Impact Assessment
- Section 5: References

1.1 Statement of Accuracy

The information provided in this CAR has been prepared by professional ecologists using the best available science to provide an accurate evaluation of critical areas and potential impacts. This CAR documents that there are no wetlands or streams present at or nearby the Project area, and that Lake Washington does not qualify as a minor lake per KZC Chapter 90. Geologically hazardous areas will be evaluated in a geotechnical report prepared consistent with KZC Chapter 85 and provided under separate cover for City review.

1.2 Review of Existing Information

As part of the analysis to identify critical areas, Anchor QEA ecologists reviewed the following sources of information to support field observations:

- KZC (City of Kirkland 2020a)
- City of Kirkland public GIS mapping (City of Kirkland 2020b)
- *David Brink Park Shoreline Renovation Project Existing Information Summary Report* (Anchor QEA 2019)
- Federal Emergency Management Agency (FEMA) Flood Insurance Rate Maps for King County, Washington (FEMA 1995)
- King County iMap Interactive Mapping Tool (King County 2020)
- U.S. Department of Agriculture Natural Resources Conservation Service (NRCS) Web Soil Survey (NRCS 2020)

- National Marine Fisheries Service (NMFS) ESA status reviews and listing information (NMFS 2020)
- U.S. Fish and Wildlife Service (USFWS) Wetlands Mapper for National Wetlands Inventory (USFWS 2020a)
- USFWS ESA status reviews and listing information (USFWS 2020b)
- Washington Department of Fish and Wildlife (WDFW) Priority Habitats and Species Maps (WDFW 2020a)
- WDFW SalmonScape Mapper (WDFW 2020b)
- Aerial photographs publicly available via Google Earth

2 Study Area Description

The Study Area for this CAR includes the entire Park property where the Project is located. The Park encompasses 1.5 acres along the shoreline of Lake Washington (Figure 2). The Park consists of open lawn areas and paved walking trails with small patches of ornamental trees and shrubs. The shoreline of Lake Washington forms the west boundary of the Park. The east boundary of the Park is bounded by Lake Street South. Residential property is located north, south, and east of the Park. Photographs of the Study Area are included in the Project Description in Appendix A. No wetlands or streams are located in or adjacent to the Park, and therefore no on-site or off-site buffers are included as part of the Study Area per KZC 90.110(4).

The Project area, as described in the Project Description in Appendix A, is defined by the entire Lake Washington shoreline within the Park, the footprint of the existing pier, and the lawn and pathway areas at the north and south ends of the Park where pathway improvements are proposed.

2.1 Topography

The topography of the Study Area slopes from Lake Street South to the Lake Washington shoreline. There are steep slopes at the face of the bulkheads where they are perpendicular to the shoreline. Otherwise, slopes in the Study Area range from 6% to 15%, according to NRCS soil data (NRCS 2020). Topographic maps identify the elevation in the Study Area as between 16 and 29 feet, as shown on the plan set in Appendix A.

2.2 Soils

The underlying soils in the Study Area consist of Arents, Alderwood material, which is a gravelly sandy loam (NRCS 2020). NRCS mapped soils are shown in Figure 3.

2.3 Hydrology

The Study Area is located within the Cedar-Sammamish Basin, Water Resource Inventory Area 8 (Ecology 2020). Hydrologic characteristics in the Study Area are influenced by regional groundwater, direct precipitation, surface water runoff, and Lake Washington.

No stream channels, areas of inundation, or seeps were identified in Study Area during the existing conditions investigation (Anchor QEA 2019). WDFW Priority Habitats and Species (PHS) and SalmonScape data do not identify any freshwater surface stream channels to Lake Washington within the Study Area (WDFW 2020a, 2020b). Lake Washington does not qualify as a minor lake under KZC Chapter 90. Because Lake Washington is hydraulically controlled by the U.S. Army Corps of Engineers (USACE), the Study Area is not located within a FEMA-designated floodplain (FEMA 1995) and does not qualify as a frequently flooded area under KZC Chapter 90.

2.1 Plant Communities

There are no undisturbed native vegetation communities located within the Study Area. The Study Area is composed of open lawn areas and paved walking trails, with small patches of planted native and ornamental trees and shrubs. The majority of the plantings are shrubs and ground cover species. All areas with trees and shrubs have a ground cover of mulch several inches thick, and it appears that regular maintenance is performed because no grass or herbaceous vegetation was growing within the mulch. Photographs of the Study Area are included in the Project Description in Appendix A. Existing plant species within the Study Area are described in Section 3.4.1.

The USFWS National Wetlands Inventory (USFWS 2020a), WDFW PHS data (WDFW 2020a), King County critical area maps (2020), and City sensitive areas maps (City of Kirkland 2020b) do not identify any freshwater wetland habitat within the Study Area (see Figure 4 for National Wetlands Inventory results). Anchor QEA ecologists did not identify any freshwater wetlands in the study area during the field investigation in March 2019.

3 Critical Areas Assessment

This section describes and assesses critical areas within and near the Study Area as defined per KZC Chapter 90 (City of Kirkland 2020a), including wetlands, streams, fish and wildlife habitat conservation areas, and frequently flooded areas. Lake Washington does not qualify as a minor lake per KZC Chapter 90, and therefore minor lakes are not evaluated further in this CAR.

3.1 Methods

To document and describe wetlands, streams, fish and wildlife habitat conservation areas, and frequently flooded areas within the Study Area, Anchor QEA reviewed existing information (Section 1.2) and performed an aerial photograph assessment. Anchor QEA ecologists performed a critical areas site visit at the Study Area on March 11, 2019, as part of the analysis for the Project *Existing Information Summary Report* (Anchor QEA 2019). The entire Study Area was accessible during the investigation. During the 2019 site visit, Anchor QEA ecologists documented general information regarding habitats and dominant plant species and communities. Potential wetland features were evaluated based on KZC wetland delineation criteria; however, no wetland conditions were observed.

The ordinary high water mark (OHWM) of Lake Washington was not delineated during the site visit because Lake Washington is hydraulically controlled, and the low- and high-water elevations are established. All wildlife species, tracks, and other signs observed during the site visit were documented. All observations were qualitative; no quantitative wildlife surveys were performed. Photographs taken to document vegetation and habitat conditions are included in Appendix A.

This CAR evaluates terrestrial and aquatic habitats and plant communities based on physical observations and using the existing information described in Section 1.2. WDFW-documented species and priority habitats and ESA-listed species and critical habitats within and near the Study Area are also evaluated.

3.2 Wetlands

No wetland conditions were observed by ecologists within the Study Area during the 2019 site visit (Anchor QEA 2019). Additionally, USFWS National Wetland Inventory data (Figure 4; USFWS 2020a), WDFW PHS data (WDFW 2020a), King County (2020) critical area maps, and City sensitive areas maps (City of Kirkland 2020b) do not identify wetland areas within at least 1,500 feet of the Study Area. No further evaluation of wetlands is provided in this CAR.

3.3 Streams

No streams, drainage channels, areas of inundation, seeps, or associated riparian habitat were observed by ecologists within the Study Area during the March 2019 site visit (Anchor QEA 2019). Additionally, WDFW PHS data (WDFW 2020a), SalmonScape data (WDFW 2020b), and City sensitive

areas maps (City of Kirkland 2020b) do not identify any stream channels within 2,000 feet of the Study Area. King County critical area maps (King County 2020) identify unclassified stream channels about 1,000 feet north and 1,000 feet south of the Study Area, but they are not located within the Study Area and will not be affected by the Project. No further evaluation of streams is provided in this CAR.

3.4 Fish and Wildlife Habitat Conservation Areas

Per KZC 90.95, fish and wildlife habitat conservation areas are areas that provide important nesting territory as well as spawning and protection areas for state and federally listed endangered, threatened, and sensitive species that have a primary association with that habitat area and state priority habitats that include species of local importance. Lake Washington is a fish and wildlife habitat conservation area under the KZC. No fish and wildlife habitat conservation areas are located within the Study Area inland of the lake shoreline.

3.4.1 Vegetation

There are no undisturbed native vegetation communities located within the Study Area. The Study Area is composed of open lawn and paved walking trails with small patches of ornamental trees and shrubs planted in some areas of the Park. The majority of the plantings are shrubs and ground cover species. A 16-inch-diameter southern magnolia (*Magnolia grandiflora*) is located at the Park's northern boundary; it is surrounded by smaller, deciduous trees and shrubs and mulched planting beds along the boundary and concrete stairs. The north-central portion of the Park has one small, 4-inch-diameter deciduous tree. Upland of the small deciduous tree and along Lake Street, there are low and deciduous shrub and tree plantings associated with the artist sculptures and overlook. There are shrubs and small trees including arborvitae adjacent to the Park's building and stairs in the central portion of the site.

The southern shoreline has several landscaped planting beds with small, deciduous trees, shrubs, and perennials in three groupings. One grouping is located south of the concrete stairs and includes two large strawberry trees (*Arbutus unedo*). A second grouping is located along the naturally forming pocket beach and includes vine maple (*Acer circinatum*), dawn redwood (*Metasequoia glyptostroboides*), and a purple-leafed plum. The third and largest grouping of vegetation is along the southern property boundary and includes a large, 72-inch-diameter cluster of Lombardy poplar trees (*Populus nigra* var. *italica*). Other native species observed included Nootka rose (*Rosa nutkana*) and sword fern (*Polystichum munitum*). Photographs of vegetation in the Project area are included in Appendix A.

3.4.2 Wildlife and Habitat

The entire Study Area includes a managed landscape with mowed grass and ornamental vegetation. Potential habitat is limited to the small patches of mostly ornamental vegetation located throughout the Park, mostly near the shoreline. Wildlife use of the terrestrial habitat is likely dominated by disturbance-tolerant species typical of urban areas. Habitat surrounding the Park includes fragmented and disturbed areas associated with residential and commercial development. Wildlife species observed during the March 2019 site visit included bird species common in urban areas of King County, including crows (*Corvus brachyrhynchos*), house sparrows (*Passer domesticus*), and gull species (*Larus* spp.). No amphibian, reptile, or mammal species, tracks, or signs were observed during the March 2019 site visit.

The aquatic habitat of Lake Washington provides quality habitat for aquatic species, as described in Section 3.4.3, but in general, lake shoreline riparian habitat is of low quality within and in the vicinity of the Study Area.

3.4.3 Lake Washington

Lake Washington is a fish and wildlife habitat conservation area and a shoreline of statewide significance per KZC Chapters 83 (Shoreline Management) and 90 (Critical Areas). The OHWM of Lake Washington was not delineated during the March 2019 site visit because the lake is hydraulically controlled by the U.S. Army Corps of Engineers (USACE) at the Hiram M. Chittenden Ballard Locks. USACE lowers the lake in the winter months (typically in December) to a low-water elevation of 16.67 feet North American Vertical Datum of 1988 (NAVD88) to allow for flood storage. In the summer (typically in June), the lake level is raised to a high-water elevation of 18.67 feet NAVD88. Therefore, the Project defines the OHWM as 18.67 feet NAVD88 and the ordinary low water mark as 16.67 feet NAVD88. The KZC Chapter 83.80 identifies the high-water elevation of Lake Washington as 18.5 feet NAVD 88 (City of Kirkland 2020a).

Lake Washington provides habitat for a variety of aquatic species. Fish species occurrence and migration documented in Lake Washington according to the WDFW PHS and SalmonScape websites (WDFW 2020a, 2020b) include bull trout (*Salvelinus confluentus*), Chinook salmon (*Oncorhynchus tshawytscha*), Puget Sound steelhead (*O. mykiss*), sockeye salmon (*O. nerka*), and coho salmon (*O. kisutch*). Other fish species that are present in Lake Washington include coastal cutthroat trout (*O. clarkii clarkii*), largemouth and smallmouth bass (*Micropterus salmoides* and *M. dolomieu*), yellow perch (*Perca flavescens*), and black crappie (*Pomoxis nigromaculatus*).

3.4.4 Priority Species and Habitats

The WDFW PHS data (WDFW 2020a) do not document occurrences of any terrestrial species or priority habitats in the Study Area or within 3,000 feet of the Park. Fish species documented in Lake

Washington according to the WDFW PHS and SalmonScape websites are described in Section 3.4.3. Analysis of federally listed species and critical habitats protected under the ESA, as identified by USFWS and NMFS, is described in Section 3.4.5, and associated ESA documentation is included in Appendix B.

3.4.5 ESA-Listed Species and Critical Habitat

The assessment for ESA-listed species and critical habitats for this Project was performed under the NMFS RAP program. The RAP program was developed by NMFS to streamline ESA Section 7 compliance for pier and shoreline projects in Lake Washington and Lake Sammamish. RAP is a voluntary program that promotes shoreline habitat restoration and environmentally friendly pier and shoreline designs. The Project is consistent with the requirements identified in the RAP program for activities on the lake shoreline, in the lake nearshore, and below the OHWM, as described in the RAP Implementation Guide (NMFS 2019).

The following subsections describe ESA-listed species and critical habitats that may occur in the vicinity of the Study Area. The ESA-listed species and critical habitats impact assessment in Section 4.1 provides a summary of the RAP analysis and results. The RAP analysis forms and tables are included in Appendix B.

ESA-listed species and critical habitats under NMFS and USFWS jurisdiction in western Washington are referenced on the agencies' websites. The NMFS identifies ESA-listed species that occur or may occur within a broad geographic area, such as an evolutionarily significant unit (ESU) or a distinct population segment (DPS), rather than a project-specific location (NMFS 2020). The USFWS identifies ESA-listed species that occur or may occur within a specific location where a project is proposed (USFWS 2020b).

3.4.5.1 Federally Listed Species that May Occur in the Study Area

The February 2020 status of federally listed species and critical habitats protected under the ESA that occur or may occur within the Study Area is presented in Table 1. As shown in Table 1, four ESA-listed species occur or may occur within the Study Area, primarily in Lake Washington. Of these species, three are aquatic (fish) and one is terrestrial (bird). No ESA-listed plant or insect species are identified as potentially occurring within the Study Area. Designated critical habitat for all four species is present within King County. However, critical habitat for marbled murrelet (*Brachyramphus marmoratus*) does not occur within the Study Area due to lack of suitable habitat.

Table 1
Federally Listed Species that May Occur in the Study Area, with their ESA and Critical Habitat Status

Species	Status	Agency	Critical Habitat
Salmonids			
Chinook salmon (*Oncorhynchus tshawytscha*)	Threatened (Puget Sound ESU)	NMFS	Designated
Puget Sound steelhead trout (*Oncorhynchus mykiss)*	Threatened (Puget Sound ESU)	NMFS	Designated
Bull trout (*Salvelinus confluentus*)	Threatened (Puget Sound DPS)	USFWS	Designated
Birds			
Marbled murrelet *(Brachyramphus marmoratus*)	Threatened	USFWS	Designated (does not include Study Area)

The following discussion provides an assessment of the potential presence of ESA-listed species and habitats within the Study Area.

3.4.5.1.1 ESA-Listed Fish Species

All three of the ESA-listed fish species identified in Table 1 are documented in Lake Washington and are known to occur or potentially occur in the vicinity of the Study Area. The freshwater habitat of Lake Washington is within designated critical habitat for Chinook salmon, steelhead, and bull trout. Chinook salmon spawning habitat is not documented to occur along the stretch of shoreline adjacent to the Park (Rohloff 2019).

3.4.5.1.2 ESA-Listed Terrestrial Species

Marbled murrelets are more commonly associated with marine habitat instead of the freshwater habitat in the Study Area. The urbanized Kirkland shoreline and recreational boat traffic on Lake Washington are unfavorable to marbled murrelets.

3.4.5.2 Federally Listed Species that Do Not Occur in the Study Area

There are four ESA-listed or proposed species identified by the USFWS as potentially occurring in the Study Area; however, these species do not occur in the vicinity of the Study Area based on the species' life history and habitat requirements. These species are identified in Table 2.

Table 2
Federally Listed Species with Life History and Habitat Requirements that Do Not Occur in the Study Area, with their ESA and Critical Habitat Status

Species	Status	Agency	Critical Habitat
Mammals			
Gray wolf (Canis *lupus*)	Proposed Endangered	USFWS	None designated or proposed
Wolverine (*Gulo gulo luscus*)	Proposed Threatened	USFWS	None designated or proposed
Birds			
Streaked horned lark (*Eremophila alpestris strigata)*	Threatened	USFWS	Designated (does not include Study Area)
Yellow-billed cuckoo (*Coccyzus americanus)*	Threatened	USFWS	Proposed (does not include Study Area)

Potential habitat for the four ESA-listed terrestrial species identified in Table 2 (gray wolf, wolverine, streaked horned lark, and yellow-billed cuckoo) is not located within many miles of the Study Area due to urban development. Additionally, these species are not typically associated with areas of human activity except in rare, usually temporary, circumstances.

3.5 Frequently Flooded Areas

As described in Section 3.4.3, Lake Washington water levels are managed and maintained by the USACE at the Ballard Locks in the winter months to a low-water elevation of 16.67 feet NAVD88. In the summer, the lake level is raised to a high-water elevation of 18.67 feet NAVD88. Since Lake Washington is hydraulically controlled by the USACE, the Park does not qualify as a frequently flooded area and no further evaluation is provided in this CAR.

4 Critical Areas Impact Assessment

This section provides a summary of potential impacts to fish and wildlife habitat conservation areas, which are identified as the sole type of critical area within the Study Area and potentially affected by the Project per KZC Chapter 90.

4.1 Fish and Wildlife Habitat Conservation Areas Assessment

The primary potential construction impact on fish and wildlife species and associated habitat is temporary removal and loss of habitat. Project construction activities will not occur in areas with undisturbed native vegetation communities or sensitive resources (streams or wetlands). Ten trees will be planted to replace the up to 10 trees that would be removed during construction. The Project is not expected to impact undisturbed wildlife habitat and will not have measurable short-term or long-term impacts on wildlife species.

Noise associated with construction activities could result in avoidance behavior by some wildlife species, if they are present. However, the Study Area is a popular park that experiences ongoing human disturbance, and it is expected that wildlife would resume use of the Park once construction is complete. Noise levels associated with operation of the Park after construction are expected to be consistent with current ambient noise levels.

The Project includes several habitat enhancement measures including creation of pocket beaches, placement of habitat gravel waterward of the shoreline protection features, removal of creosote-treated timber piles, and replacement of the existing pier's solid timber decking with grated, light-transmitting decking. These measures will improve Lake Washington shoreline habitat and water quality conditions for fish and wildlife species compared to existing conditions. All in-water work will be completed during the approved in-water work window for Lake Washington to reduce potential impacts on fish species.

Overall, the Project will not result in measurable potential impacts on ESA-listed species or critical habitats, and the restoration activities will improve shoreline and aquatic habitat and water quality conditions compared to existing conditions. The Project will result in long-term habitat improvements in the freshwater aquatic habitat of Lake Washington. The proposed Project elements meet the RAP guidelines for the assessment for ESA-listed species and critical habitats. As presented in the RAP analysis, only one tree species from the RAP plant list will be planted as part of the Project due to neighborhood concerns about tree heights in the Park. Five shrub species from the RAP plant list will be planted as part of the Project design. The RAP analysis is presented in Appendix B.

Based on the proposed Project elements, if an ESA biological evaluation was performed for this Project instead of the RAP analysis, the effect determination for Chinook salmon, steelhead, and bull

trout species and critical habitats would likely be “may affect, not likely to adversely affect.” The effect determination for marbled murrelet would likely be “no effect.”

In summary, the Project is located within an urban Park with no undisturbed native vegetation communities or associated wildlife habitat, and therefore impacts to those features are not anticipated. The Project proposes habitat enhancement features along the Lake Washington shoreline (including pocket beach installation, placing shoreline habitat gravel, and native riparian planting), removal of creosote-treated timber piles, and replacement of the existing pier’s solid timber decking with grated, light-transmitting decking. These measures will improve habitat conditions for fish and wildlife species compared to existing conditions. Best management practices that will be employed during construction to avoid or minimize potential adverse impacts on the aquatic environment are described in the Project Description in Appendix A.

5 References

Anchor QEA, 2019. *David Brink Park Shoreline Renovation Existing Information Summary Report*. Prepared for City of Kirkland Parks and Community Services and Public Works Departments. March 2019.

City of Kirkland, 2020a. "City of Kirkland Zoning Code." Accessed February 18, 2020. Available at: https://www.codepublishing.com/WA/Kirkland/.

City of Kirkland, 2020b. "City of Kirkland GIS Maps Sensitive Areas." Accessed February 18, 2020. Available at: https://www.kirklandwa.gov/Assets/IT/GIS/Sensitive+Areas+Map.pdf.

Ecology (Washington State Department of Ecology), 2020. "Environmental Information; Water Resource Inventory Area Maps, Cedar-Sammamish Basin WRIA 8." Accessed February 18, 2020. Available at: https://fortress.wa.gov/dfw/score/score/maps/map_details.jsp?geocode=wria&geoarea=WRIA08_Cedar_Sammamish.

FEMA (Federal Emergency Management Agency), 1995. FEMA Federal Insurance Rate Map for King County, Washington and Unincorporated Areas. Map Number 53033C0365F; Panel 365 of 1,725. May 16, 1995.

King County, 2020. "King County iMap Interactive Mapping Tool." Accessed February 18, 2020. Available at: https://gismaps.kingcounty.gov/iMap/.

NMFS (National Marine Fisheries Service), 2019. *Implementation Guide for Restoration and Permitting (RAP) for Lake Washington and Lake Sammamish Instructions for Applicants*. July 2019.

NMFS, 2020. "Endangered Species Act Status Reviews and Listing Information." Accessed February 18, 2020. Available at: http://www.westcoast.fisheries.noaa.gov/protected_species/salmon_steelhead/salmon_and_steelhead.html.

NRCS (U.S. Department of Agriculture Natural Resources Conservation Service), 2020. "Natural Resources Conservation Service (NRCS) Web Soil Survey." Accessed February 18, 2020. Available at: http://websoilsurvey.nrcs.usda.gov/app.

Rohloff, Ezekiel (Washington Department of Fish and Wildlife), 2019. Personal communication with City of Kirkland and Anchor QEA staff. June 17, 2019.

USFWS (U.S. Fish and Wildlife Service), 2020a. "Wetlands Mapper for National Wetlands Inventory." Accessed March 2, 2020. Available at: https://www.fws.gov/wetlands/

USFWS, 2020b. "Endangered Species Act Status Reviews and Listing Information." Accessed February 18, 2020. Available at: https://ecos.fws.gov/ipac/.

WDFW (Washington Department of Fish and Wildlife), 2020a. "Priority Habitats and Species Maps." Accessed February 18, 2020. Available at: http://wdfw.wa.gov/mapping/phs/.

WDFW, 2020b. "SalmonScape." Accessed February 18, 2020. Available at: http://apps.wdfw.wa.gov/salmonscape/.

Critical Areas Report Figures

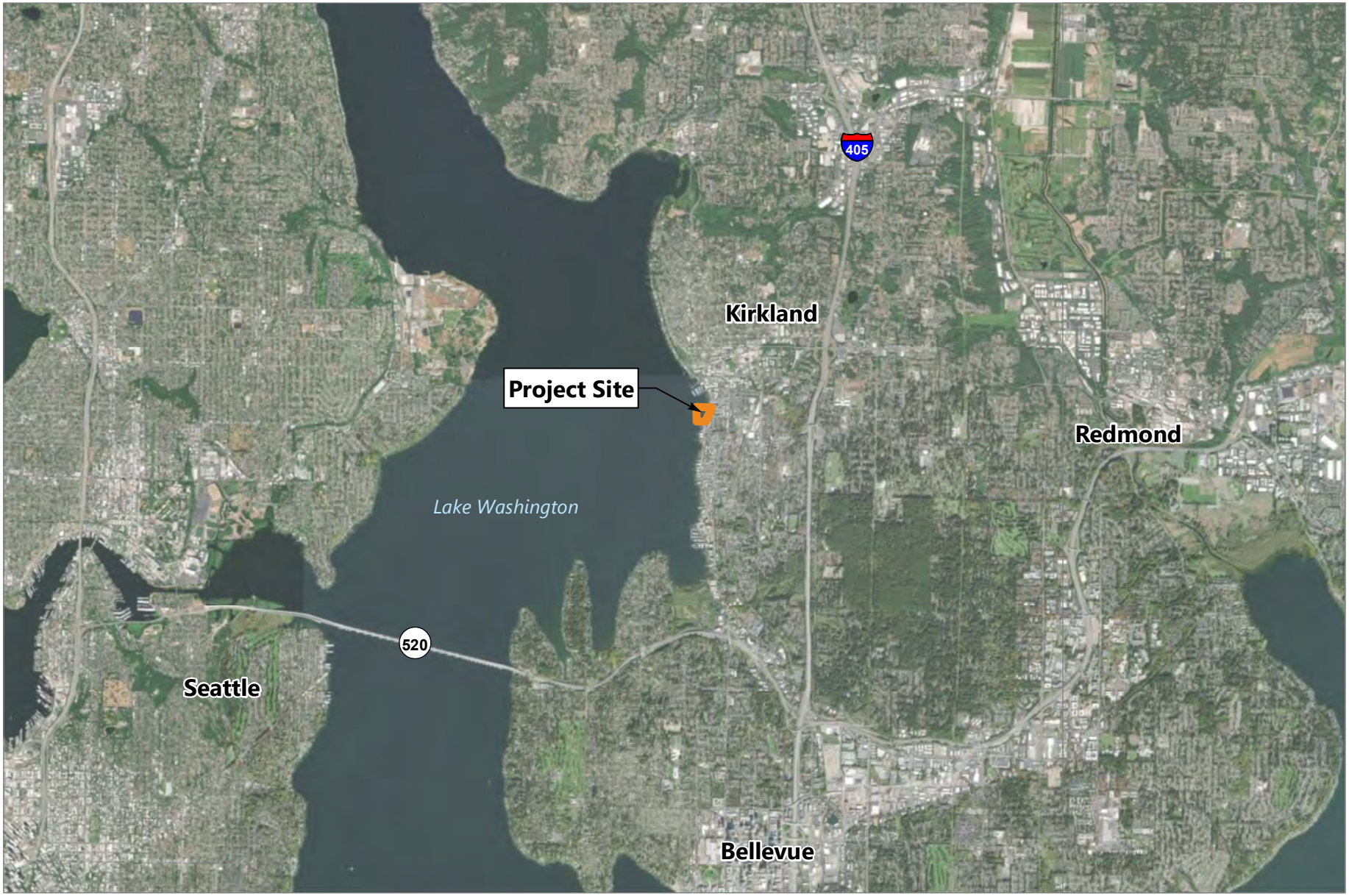

Publish Date: 2020/03/11, 4:02 PM | User: adowell
Filepath: \\orcas\gis\Jobs\City_of_Kirkland_1006\Maps\David_Brink_Park_Critical_Areas_Report\AQ_DavidBrink_fig1_Vicinity_Map.mxd

ANCHOR QEA

0 2
Miles

Figure 1
Vicinity Map
Critical Areas Report
David E. Brink Park Shoreline Renovation Project

Publish Date: 2020/03/11, 4:02 PM | User: adowell
Filepath: \\orcas\gis\Jobs\City_of_Kirkland_1006\Maps\David_Brink_Park_Critical_Areas_Report\AQ_DavidBrink_fig2_Site_Aerial.mxd

ANCHOR QEA

Figure 2
Aerial Photograph of Study Area
Critical Areas Report
David E. Brink Park Shoreline Renovation Project

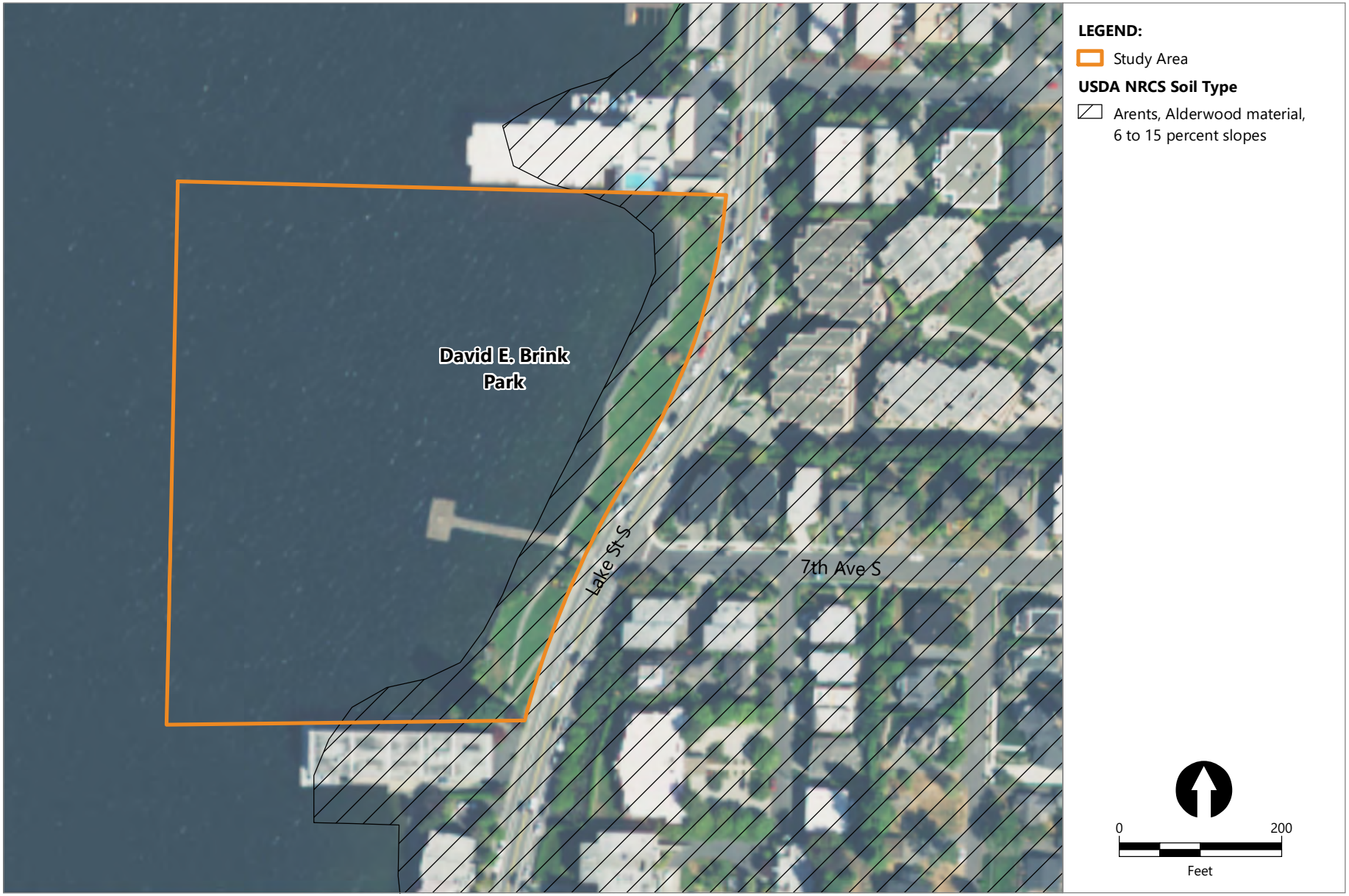

Publish Date: 2020/03/11, 4:03 PM | User: adowell
Filepath: \\orcas\gis\Jobs\City_of_Kirkland_1006\Maps\David_Brink_Park_Critical_Areas_Report\AQ_DavidBrink_fig3_USDA_NRCS_Soils.mxd

ANCHOR QEA

Figure 3
USDA NRCS Soils
Critical Areas Report
David E. Brink Park Shoreline Renovation Project

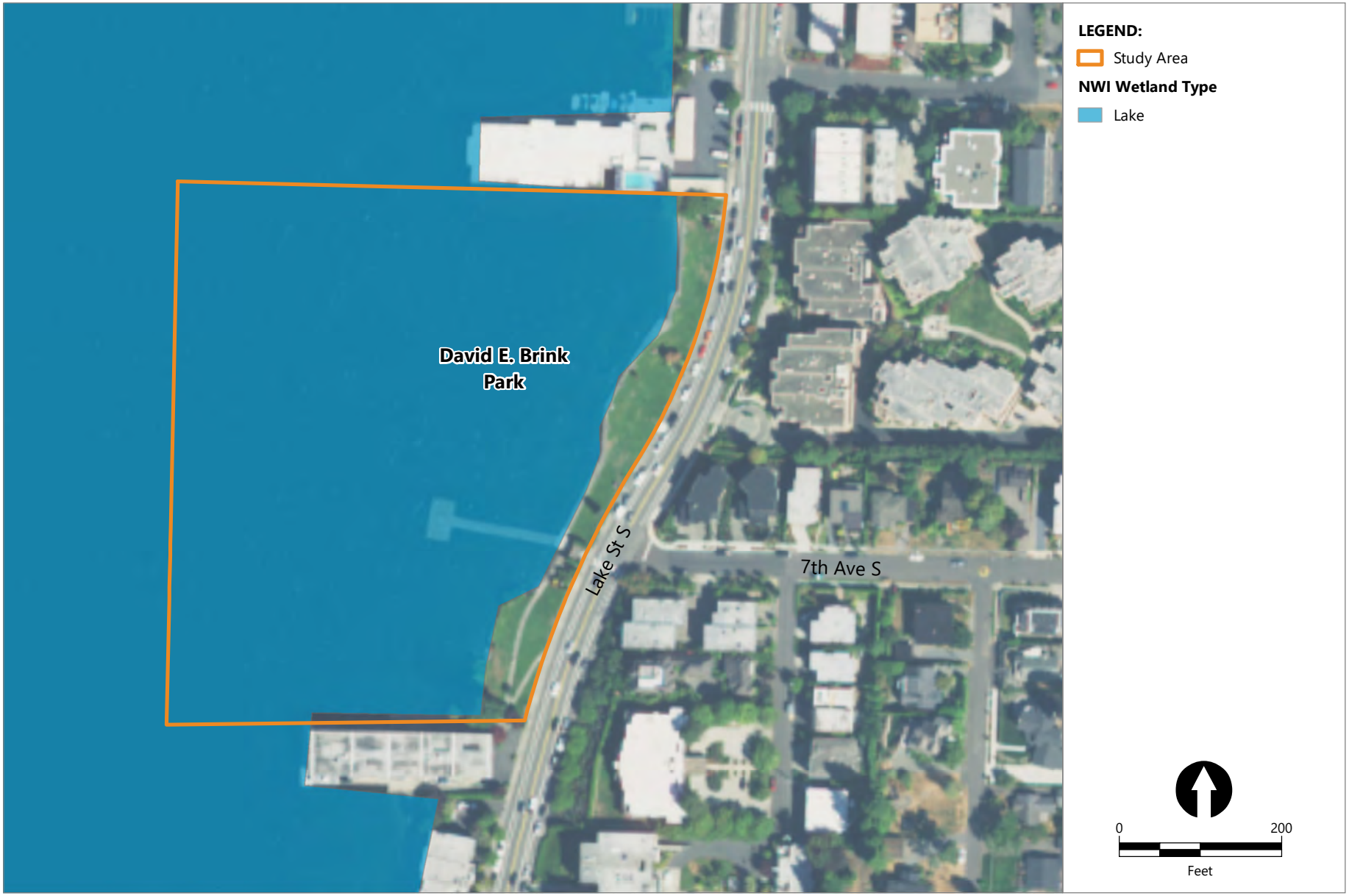

Publish Date: 2020/03/11, 4:03 PM | User: adowell
Filepath: \\orcas\gis\Jobs\City_of_Kirkland_1006\Maps\David_Brink_Park_Critical_Areas_Report\AQ_DavidBrink_fig4_USFWS_NWI.mxd

ANCHOR QEA

Figure 4
USFWS National Wetlands Inventory
Critical Areas Report
David E. Brink Park Shoreline Renovation Project

Appendix A
Project Description and Plan Set

Provided as separate PDF and Excel files

Attachment 3
Restoration and Permitting Program Documentation

Provided as separate PDF and Excel files

May 2020
David E. Brink Park Shoreline Renovation Project

Project Description

Prepared for City of Kirkland Parks and Community Services and Public Works Departments

May 2020
David E. Brink Park Shoreline Renovation Project

Project Description

Prepared for
City of Kirkland Parks and Community Services and Public Works Departments
123 5th Avenue
Kirkland, Washington 98033-6189

Prepared by
Anchor QEA, LLC
1201 3rd Avenue, Suite 2600
Seattle, Washington 98101

Project Number: 191006-01.02

TABLE OF CONTENTS

1 Introduction 1

2 Purpose 1

3 Location and Background 1

4 Existing Conditions 2

4.1 Reach 1 3

4.2 Reach 2 3

4.3 Pier 3

4.4 Reach 3 3

4.5 Reach 4 3

4.6 Habitat Conditions 7

5 Project Elements and Construction Methods 8

5.1 Bulkhead Replacement and Installation 8

5.2 Habitat Enhancement 10

5.3 Upland Activities 11

5.4 Project Timing and Schedule 13

5.5 Best Management Practices 13

6 References 14

TABLES

Table 1 Bulkhead Repair and Replacement Summary 10

Table 2 Impervious Surfaces Summary (square feet) 12

PHOTOGRAPHS

Photograph 1 View of sloped lawn area at Park's north end, viewed from the Lake Street sidewalk 4
Photograph 2 View of existing concrete building from the bottom of the sloped lawn area 4
Photograph 3 Naturally accumulating beach area at Reach 1 4
Photograph 4 Spalling concrete pathway along Reach 2 5
Photograph 5 Timber pier decking with lights and swim ladders 5
Photograph 6 Concrete stairs showing signs of differential settlement at Reach 3 6
Photograph 7 Collapsed portion of concrete bulkhead at Reach 4 6
Photograph 8 Naturally forming pocket beach at Reach 4 7

ATTACHMENTS

Plan Sheets

ABBREVIATIONS

ADA	Americans with Disabilities Act
BMP	best management practice
City	City of Kirkland
OHWM	ordinary high water mark
Park	David E. Brink Park
Project	David E. Brink Park Shoreline Renovation Project

1 Introduction

The City of Kirkland (City) is proposing to repair aging shoreline infrastructure and provide habitat enhancements as part of the David E. Brink Park Shoreline Renovation Project (Project). The Project is located at David E. Brink Park (Park) on Lake Washington at 555 Lake Street South in Kirkland, Washington (Sheet 1). The Project will address safety issues along the shoreline through a combination of repair, replacement, and removal of existing shoreline protection features as recommended in the *David E. Brink Park Shoreline Renovation Existing Information Summary Report* (Anchor QEA 2019). The Project will also enhance user experience by providing new access pathways that meet Americans with Disabilities Act (ADA) requirements. Proposed activities include the following:

- Removing and replacing a portion of the concrete bulkhead with a vinyl sheetpile wall with concrete cap at the north end and basalt rockery at the south end of the Park
- Removing and replacing the shoreline water access stairs south of the existing pier with a shorter stair feature
- Replacing the existing pier timber decking with a new grated decking
- Installing terraced rock walls, rock revetment, and vegetated areas behind the south end rockery with native low shoreline plantings
- Removing existing derelict piling near the shoreline
- Creating two new pocket beaches with native shoreline plantings
- Placing habitat gravel waterward of the shoreline protection features and pocket beaches
- Constructing ADA-compliant public access pathways

2 Purpose

The Park is located on Lake Washington and is one of the waterfront parks open year-round in Kirkland. The Park is a highly utilized green space with panoramic views to Lake Washington and Seattle. A 2019 shoreline structural assessment found the shoreline structures at the Park to be in critical condition in some areas along the existing bulkhead (BergerABAM 2019). The purpose of the Project is to address failing shoreline infrastructure, improve public access along the shoreline, and enhance nearshore habitat.

3 Location and Background

The 1.5-acre Park is located south of downtown Kirkland in Kirkland's Moss Bay neighborhood. The Park is along a popular pedestrian and bike corridor that runs along Lake Street and then Lake Washington Boulevard Northeast and links multiple City shoreline parks, including Marina Park to the north and Settler's Landing, Marsh Park, Houghton Beach Park, and Yarrow Bay wetlands to the south. The Cross Kirkland Corridor multiuse trail is located approximately 0.3 mile east of the Park.

The Park is a popular waterfront destination for visitors seeking to experience the expansive views of Lake Washington and Seattle. In 2014, the City conducted a shoreline structure assessment of the Kirkland shoreline parks. The study found portions of the Park's shoreline to be in "poor" to "very poor" condition (AES 2014). Therefore, maintaining the shoreline infrastructure to address safety and environmental concerns was identified as a high priority by the City.

The City conducted stakeholder and public engagement processes through the early design phases to support the Project and obtain feedback on the design. The City published an online open house for the Project in May 2019 to introduce the Project to the public and to receive feedback through the online forum. Early regulatory agency input was also obtained during a multiagency site visit in June 2019 to discuss the Project. The Project has also been presented to the City of Kirkland Park Board for initial comments and feedback. The primary feedback during the public process was to enhance ADA-compliant access with the provision of new ADA-compliant pathways, and to maintain views to the lake from the Park and neighbors by carefully designing planting locations and species. The City integrated public comments into the Project's final 30% design.

4 Existing Conditions

The Park is owned and maintained by the City. It is bordered by condominiums to the south and north, Lake Street South to the east, and Lake Washington to the west (Sheet 2). The Park includes 660 linear feet of Lake Washington shoreline.

The Park is characterized by its gentle slope immediately landward of the bulkhead along the Lake Washington shoreline. The slope steepens as it approaches Lake Street South (Photograph 1; Sheet 3; Sheet 4). The Park includes a pathway loop that begins in the north with a 5-foot-wide concrete stair connecting Lake Street to the multiuse concrete path down to the shoreline. The stair does not provide ADA-compliant universal access. The path follows the shoreline adjacent to the existing bulkhead toward the pier. The path continues to the south and up toward an ADA-compliant pathway switchback connecting to the Lake Street sidewalk.

An existing 15-foot by 20-foot concrete building, approximately 10 feet high, is located upland of the pier with an accessible door at the bottom of the sloped lawn area (Photograph 2). The building was historically used by lifeguards for storage but is not currently used. The building is built into the slope and the rooftop is on grade with the adjacent Lake Street sidewalk. The rooftop is a publicly accessible viewing area with a perimeter guardrail and three benches. North of the rooftop deck along the Lake Street sidewalk, there is another overlook with a public art piece consisting of three cast bronze sculptures and a small water feature with low plantings.

The shoreline consists almost entirely of concrete bulkhead and rockeries. A 2014 shoreline structures assessment found that the shoreline structures at the Park range from "good" to "poor"

and “very poor” condition (AES 2014). The assessment characterized the shoreline in four reaches and the pier, as described below. Refer to Sheets 3 and 4 for reach locations.

4.1 Reach 1

A cast-in-place concrete panel bulkhead extends 142 linear feet south from the northern property boundary, north of the existing pier (Photograph 3). This bulkhead was determined to be in “poor” condition due to large cracks and displaced concrete panels. Gravel and sand are naturally accreting waterward of the bulkhead, forming a pocket beach on the north end with rockery retaining a landscaped area along the north boundary.

4.2 Reach 2

Reach 1 ends and Reach 2 begins at a small offset of beach access stairs that extend into the water. An ecology block bulkhead in “good” condition runs 318 linear feet from the concrete stair structure at the north to the pier. The concrete surface pathway adjacent to the bulkhead face has a rough, exposed aggregate with spalling concrete in several areas and is in “moderate” condition (Photograph 4). City parks maintenance staff noted during a site visit that they perform maintenance on the bulkhead by replacing backfill material that pipes out of the bulkhead’s toe over time.

4.3 Pier

A 12-foot-wide timber public pier extends approximately 160 feet into the lake and terminates at an expanded 1,400-square-foot platform that provides fishing access, informal bench seating for respite and viewing, and a swim ladder (Photograph 5). The pier structure is in good condition with portions of the timber decking appearing moderately weathered. The pier is supported by timber piles and the solid timber decking along the entirety of the pier does not currently allow for light penetration to the underlying aquatic environment.

4.4 Reach 3

South of the pier, Reach 3 includes a beach access stair that extends 65 linear feet along the shoreline and is supported by a concrete stepped bulkhead. The stepped bulkhead and stairs are showing signs of severe undermining and severe differential settlement, causing stair risers and treads to separate, and exhibiting flanking (erosion at the south end of the hard structure where the stairs end; Photograph 6).

4.5 Reach 4

The remaining 190 linear feet of shoreline south of the concrete stairs contains a failing concrete soldier pile bulkhead and is in “poor” condition. The southernmost section failed completely in winter 2019 and fell into the lake (Photograph 7). A small pocket beach has naturally formed behind a section of failed bulkhead in the middle section (Photograph 8).

Photograph 1
View of sloped lawn area at Park's north end, viewed from the Lake Street sidewalk

Photograph 2
View of existing concrete building from the bottom of the sloped lawn area

Photograph 3
Naturally accumulating beach area at Reach 1

Photograph 4
Spalling concrete pathway along Reach 2

Photograph 5
Timber pier decking with lights and swim ladders

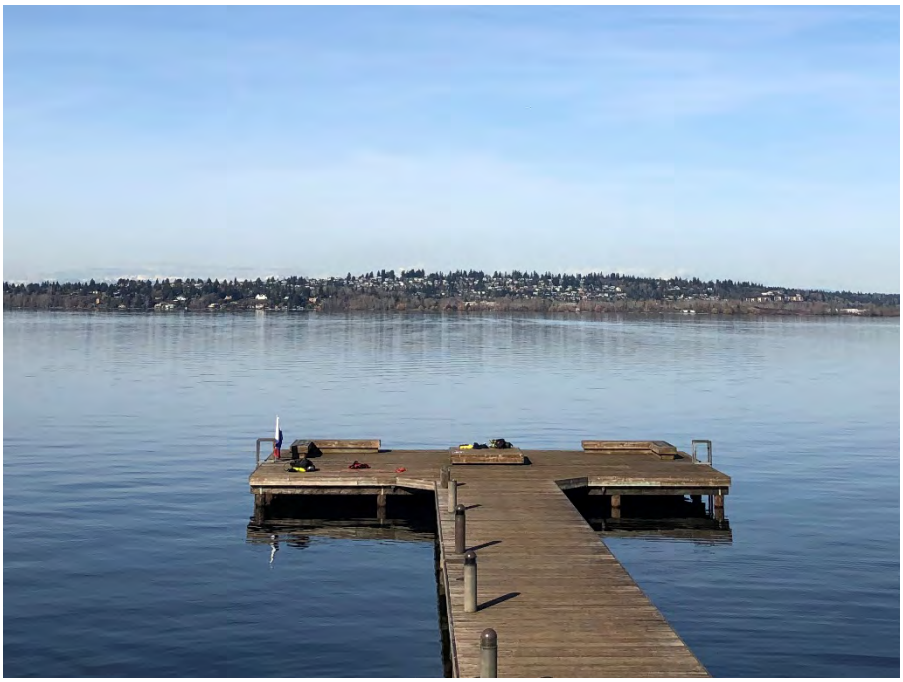

Photograph 6
Concrete stairs showing signs of differential settlement at Reach 3

Photograph 7
Collapsed portion of concrete bulkhead at Reach 4

Photograph 8
Naturally forming pocket beach at Reach 4

4.6 Habitat Conditions

The Park includes maintained grass lawn and planted shrubs and trees, primarily located along the shoreline. A 16-inch-diameter southern magnolia (*Magnolia grandiflora*) located at the site's northern boundary is surrounded by smaller, deciduous trees and shrubs and mulched planting beds along the boundary and concrete stairs. The north-central portion of the Park has one small, 4-inch-diameter deciduous tree. Upland of the small deciduous tree and along Lake Street, there are low and deciduous shrub and tree plantings associated with the artist sculptures and overlook. There are shrubs and small trees, including arborvitae, adjacent to the Park's building and stairs in the central portion of the site.

The southern shoreline has several landscaped planting beds with small, deciduous trees, shrubs, and perennials in three groupings. One grouping is located south of the concrete stairs and includes two large strawberry trees (*Arbutus unedo*). A second grouping is located along the naturally forming pocket beach (Photograph 8) and includes vine maple (*Acer circinatum*), dawn redwood (*Metasequoia glyptostroboides*), and a purple-leafed plum. The third and largest grouping of vegetation is along the southern property boundary and includes a large, 72-inch-diameter cluster of Lombardy poplar trees (*Populus nigra* var. *italica*).

Wildlife species observed during a site visit included bird species common in urban areas of King County: crows (*Corvus brachyrhynchos*), house sparrows (*Passer domesticus*), and gull species (*Larus* spp.). A dwarf maple tree was partially chewed, providing evidence of beaver (*Castor canadensis*) activity on the shoreline. No amphibian or reptile species, tracks, or signs were observed during the site visit (Anchor QEA 2019). Overall, the Park is completely managed with mowed grass and ornamental vegetation. Potential habitat is limited to the small patches of mostly ornamental vegetation. Wildlife use of the terrestrial habitat is likely dominated by disturbance-tolerant species typical of urban areas. Habitat surrounding the Park includes fragmented and disturbed areas associated with residential and commercial development.

Concrete bulkheads and stairs extend along the entire Lake Washington shoreline within the Park as described previously. Lake Washington is a large, freshwater lake that occupies approximately 34 square miles between the metropolitan cities of Seattle and Kirkland. The water levels in Lake Washington are seasonally managed by the U.S. Army Corps of Engineers to accommodate water usage, navigation, fish passage, and salinity control. Lake Washington is an important natural resource for fish and wildlife habitat. The lake shoreline serves as an important rearing area for threatened juvenile Chinook salmon *(Oncorhynchus tshawytscha)*, as well as supporting many other aquatic and wildlife species. The size, quality, and low elevation of Lake Washington are critical for providing excellent habitat for fish, particularly sockeye salmon *(O. nerka)*, which rear in lakes rather than rivers and which grow to unusually large size in Lake Washington.

In addition to Chinook and sockeye salmon, the Washington Department of Fish and Wildlife Priority Habitats and Species database documents the occurrence and migration of the following species in Lake Washington: coho salmon *(O. kisutch)*, Puget Sound steelhead *(O. mykiss)*, and Coastal Puget Sound bull trout *(Salvelinus confluentus;* WDFW 2020a, 2020b). Other fish species that are present in Lake Washington include coastal cutthroat trout (*O. clarkii clarkii*), largemouth and smallmouth bass (*Micropterus salmoides* and *M. dolomieu*), yellow perch (*Perca flavescens*), and black crappie (*Pomoxis nigromaculatus*).

5 Project Elements and Construction Methods

The following describes the proposed Project elements and anticipated construction methods, including best management practices (BMPs) to avoid or minimize potential environmental impacts during construction.

5.1 Bulkhead Replacement and Installation

The Project includes removing approximately 356 linear feet of existing concrete bulkhead to the north and the south of the existing pier (Sheets 11 and 12). This includes approximately 142 linear feet of existing concrete panel bulkhead and adjacent shoreline pathway within Reach 1 (the north

end), which will be removed to create approximately 110 linear feet of pocket beach area (measured along the ordinary high water mark [OHWM]; Sheet 11). In this location, the removed bulkhead will be replaced with 140 linear feet of vinyl sheetpile wall with a concrete cap that will abut the new shoreline pathway and connect to the existing shoreline pathway. The north portion of the pocket beach will also include approximately 30 linear feet of rock slope that will transition to the existing stairs and Reach 2 ecology block bulkhead, which is in good condition and will remain. Installation of the vinyl sheetpile wall will be through excavation and backfill. Backfill materials will then be compacted and prepared for the shoreline pathway and Park improvements.

The spalling concrete pathway in Reach 2 will be repaired with a new concrete surface. The associated Reach 2 concrete bulkhead is in a good location, but to reduce the loss of backfill material from piping out from this bulkhead, habitat gravel will be placed waterward of the bulkhead toe.

The existing concrete water access stairs in Reach 3, located south of the existing pier, will be removed and replaced. The new concrete stairs will be reduced from approximately 65 feet to 38 feet long. The removed concrete stair will be replaced with rockery to stabilize the shoreline (Sheets 16 and 17).

Approximately 187 linear feet of the concrete soldier pile bulkhead will be removed from Reach 4 to create the southern pocket beach (Sheet 12). The southern pocket beach will be accessible from the existing shoreline pathway loop with the installation of new steps (granite, pre-cast, or cast-in-place concrete) and a new ADA-compliant pathway spur. The southern pocket beach will be approximately 60 linear feet (measured along OHWM) and will be situated between rock revetment and rockery at the shoreline. Rockery will extend approximately 30 linear feet to the south of the new steps and rock revetment will be installed from the rockery to the south property boundary. Approximately 55 linear feet of rockery will extend to the north of the new steps, followed by 70 linear feet of rock revetment and 25 linear feet of rockery. Note that the new steps will be installed above OHWM.

Proposed work will primarily occur from the land; some barge-based work may also occur. Concrete will be removed using concrete saws, jackhammers, or similar equipment. Grading work will be performed using typical equipment, including dump trucks, front-end loaders, backhoes, and/or tracked excavators. Concrete will be installed using standard heavy equipment such as cement mixers, pavers, and dump trucks. Imported rock, woody debris, and habitat gravel or other substrate materials used for the pocket beaches will be brought to the site using dump trucks. Rock will be placed using either a backhoe or a tracked excavator.

Table 1 summarizes the proposed bulkhead removal and replacement activities, including fill quantities for proposed work above and below the OHWM.

Table 1
Bulkhead Repair and Replacement Summary

Element	Location	Approximate Amount of Fill Removed/Installed	
		Below OHWM	Above OHWM
Concrete panel bulkhead removal	Reach 1	32 cubic yards removal	n/a
Bulkhead rockery removal	Reaches 1 and 4	10 cubic yards removal	n/a
Concrete water access stair removal	Reach 3	42 cubic yards removal	6 cubic yards removal
Concrete soldier pile wall bulkhead removal	Reach 4	40 cubic yards removal	n/a
Pocket beach installation: excavation behind bulkheads	Reaches 1 and 4	n/a	485 cubic yards removal
Vinyl sheetpile wall with concrete cap installation	Reach 1, new pocket beach	n/a	12 cubic yards installation
Rock revetment installation	Reaches 1 and 4, new pocket beach	50 cubic yards installation	67 cubic yards installation
Shoreline cobble underlayment	Reaches 1, 2, 3, and 4	125 cubic yards installation	n/a
Shoreline habitat gravel installation	Reaches 1, 2, 3, and 4	125 cubic yards installation	n/a
Concrete water access stair replacement	Reach 3	50 cubic yards installation	6 cubic yards installation
Rockery installation at shoreline	Reaches 1 and 4	11 cubic yards installation	18 cubic yards installation
Rock terrace installation	Reach 4	n/a	43 cubic yards installation
Pocket beach installation: habitat gravel	Reaches 1 and 4	186 cubic yards installation	15 cubic yards installation
Pocket beach installation: beach sand	Reaches 1 and 4	n/a	50 cubic yards installation
	Total Removal	**124 cubic yards**	**491 cubic yards**
	Total Installation	**547 cubic yards**	**211 cubic yards**

5.2 Habitat Enhancement

The Project includes several habitat enhancement features including installing pocket beaches, placing habitat gravel and cobble underlayment (to support the habitat gravel layer) along the shoreline waterward of the shoreline protection features, replacing the existing pier solid timber decking with grated decking, and removing creosote-treated timber piles located on the south end of the Park.

The pocket beaches (described earlier) will include approximately 2,517 square feet of aquatic habitat and approximately 1,540 square feet of new shoreline native planting at the south pocket beach.

Beach sand will be placed on top of the habitat gravel above OHWM, and two logs will be placed to provide seating at the north and south pocket beaches.

The gravel substrate placement activities will occur at the proposed pocket beaches. This includes placing approximately 186 cubic yards of 1-inch-minus gravel waterward of OHWM consistent with Washington Department of Fish and Wildlife requirements. Material will be placed using a tracked excavator or a front-end loader and bulldozer for beach gravel. Materials will be placed in the "dry," during low Lake Washington water-level periods of the year.

The Project also includes replacing approximately 3,000 square feet of solid timber pier decking with grated, light-transmitting decking (minimum 43% light transmission). This will allow light to be transmitted to the underlying aquatic habitat, improving conditions under and around the existing pier. Components will be delivered to the site by truck and installed from the upland with a land-based crane.

Other habitat and water quality considerations include removing up to 31 approximately 10-inch-diameter, derelict, creosote-treated timber piles associated with an old pier structure on the south end of the Park. Existing piles to be removed will be extracted according to the BMP standards provided by the Washington Department of Natural Resources (WDNR 2017). Piles will be removed by wrapping the pile with a chain and removing it with a crane or similar equipment. If a pile were to break above the mudline during removal, then an attempt would be made to pull the remainder of the pile in a way that minimizes disturbance of sediments; otherwise, it would be cut at or below the mudline.

5.3 Upland Activities

The Project proposes additional Park upland improvements including planting native vegetation along the shoreline, constructing ADA-compliant pathways, and maximizing view corridors by retaining lawn areas and adding a new viewpoint and lawn areas. Details of proposed upland Project elements are described as follows:

- Remove up to 10 shoreline trees and replace with 10 shoreline trees (refer to Sheets 5 and 6; Sheets 13 through 15).
- Install approximately 620 square feet of upland ornamental plantings.
- Place approximately 43 cubic yards (over 195 linear feet) of rock terrace.
- Place approximately 67 cubic yards (over 600 square feet) of rock revetment.
- Install new steps (granite, pre-cast, or cast-in-place) above OHWM to access the south pocket beach.
- Construct a new ADA-compliant pathway to the new viewpoint area at the south beach.
- Install a stepped concrete seatwall at the north beach.
- Replace the existing shoreline pathway at the north beach with a new concrete pathway.
- Construct a new ADA-compliant pathway to Lake Street.

- Repair approximately 2,320 square feet of existing concrete pathway along the existing concrete bulkhead.
- Create a new lawn area by the south pocket beach.

The Project includes replacing the shoreline pathway at the Park's north end, creating a new ADA-compliant pathway spur at the south end pocket beach, and creating a new ADA-compliant pathway up the Park's slope. The new ADA-compliant pathway loop connection will retain existing open lawn space for picnicking and open view corridors.

In order to construct the proposed pocket beaches and shoreline protection features, up to 10 trees located along the shoreline will be removed and replaced with 10 new trees. All trees planted within 10 horizontal feet of OHWM will be species native to the region (Sheet 15). At the southern pocket beach, approximately 43 cubic yards of terraced rock wall will be placed landward of the beach, and approximately 1,540 square feet of shoreline native low-growing vegetation will be planted between and behind the rock walls. New steps will be installed or cast-in-place above OHWM to connect the existing shoreline pathway to the new pocket beach. North of the new steps, a new approximately 65-foot ADA-compliant concrete pathway will lead to a new viewpoint overlooking the southern pocket beach. A new lawn will be located in the area between the new path and the existing pathway. Table 2 shows the total impervious surface area associated with each upland Project element.

Table 2
Impervious Surfaces Summary (square feet)

Project Element	Impervious Surface Removed	Impervious Surface Area Replaced	Impervious Surface Installed
Install new steps and path to steps	n/a	n/a	197
Construct new shoreline concrete pathway at north beach	-1,400	n/a	1,084
Construct new ADA-compliant pathway from north beach to Lake Street to create Park loop	n/a	n/a	953
Construct concrete retaining walls at north end of the Park	n/a	n/a	324
Repair concrete pathway along the existing concrete bulkhead along the northern shoreline	-2,320	2,320	n/a
Construct new pathway spur at south beach	n/a	n/a	275
Construct concrete water access stair and repair adjacent pathway	-1,121	863	n/a
Total Proposed Impervious Surface Removed, Replaced, or Installed	**-4,841**	**3,183**	**2,833**
Total Proposed Impervious Surface Net Change	**-1,175**		

5.4 Project Timing and Schedule

Project construction is anticipated to occur over a 3-month period beginning in or around fall 2021, once all permits and approvals are secured. All in-water work will be completed during the approved in-water work window for Lake Washington occurring between July 16 and March 15, or during an approved extension if requested. Overwater or upland activities may occur outside of the in-water work window.

5.5 Best Management Practices

To avoid or minimize potential adverse impacts to the aquatic environment, the following BMPs will be employed during construction:

- Applicable permits for the Project will be obtained prior to construction. Work will be performed according to the requirements and conditions of these permits.
- In-water activities will be conducted during low water levels to the extent practicable to avoid or minimize in-water work.
- In-water work (not including mobilization) will occur during the approved regulatory work window, or an approved extension of the work window, for Lake Washington in the Project area. The expected work window for listed/protected species at David E. Brink Park, Lake Washington, is July 16 through March 15.
- Construction of the proposed Project will comply with water quality requirements imposed by the Washington State Department of Ecology (Washington Administrative Code Chapter 173-201A).
- The contractor will be responsible for the preparation and implementation of a Spill Prevention, Control, and Countermeasures Plan to be used for the duration of the Project, which will include spill prevention, control, and response BMPs.
- The contractor will supply a Temporary Erosion and Sediment Control Plan (and/or a Construction Stormwater Pollution Prevention Plan that will use BMPs to prevent erosion and sediment-laden runoff from leaving the site) to the Project Engineer. The plan will be implemented prior to the start of ground-disturbing construction activities.
- Excess or waste materials will not be disposed of or abandoned waterward of the OHWM or allowed to enter nearby surface waters.
- Barges, if used for construction, will not be allowed to ground out during construction.
- The contractor will be required to retrieve any floating debris generated during construction using a skiff and a net. Debris will be disposed of at an appropriate upland facility.
- Demolition and construction materials will not be stored where upland runoff can cause materials to enter surface waters.
- No uncured concrete will be in contact with surface waters.

- No petroleum products, chemicals, or other toxic or deleterious materials will be allowed to enter surface waters.
- Existing piles will be removed as practicable, using best efforts, equipment preferences, and BMPs identified in the Washington Department of Natural Resources *Derelict Creosote Piling Removal Best Management Practices for Pile Removal & Disposal* (WDNR 2017).
- All creosote-treated materials will be disposed of in a landfill or recycling facility approved to accept these types of materials.

6 References

AES (Associated Earth Sciences, Inc.), 2014. *Kirkland Parks Shoreline Structures Assessment.* Prepared for City of Kirkland Parks and Community Services Department. January 9, 2014.

Anchor QEA, 2019. *David E. Brink Park Shoreline Renovation Existing Information Summary*. Prepared for City of Kirkland Parks and Community Services Department. May 2019.

BergerABAM, 2019. *David Brink Park – Waterfront Condition Assessment*. Prepared for Anchor QEA. March 2019.

WDFW (Washington Department of Fish and Wildlife), 2020a. "Priority Habitats and Species Maps." Accessed February 18, 2020. Available at: http://wdfw.wa.gov/mapping/phs/.

WDFW, 2020b. "SalmonScape." Accessed February 18, 2020. Available at: http://apps.wdfw.wa.gov/salmonscape/.

WDNR (Washington State Department of Natural Resources), 2017. *WDNR Derelict Creosote Piling Removal Best Management Practices for Pile Removal & Disposal.* January 25, 2017.

Plan Sheets

APPENDIX G: STRUCTURAL ENGINEERING CALCS.

City of Kirkland

STRUCTURAL ENGINEERING CALCULATIONS

CITY OF KIRKLAND

KIRKLAND, WA

DAVID BRINK PARK
SHORELINE RENNOVATIONS

9/15/2020

STRUCTURAL NARRATIVE

A. PROJECT DESCRIPTION

The David Brink Park pier is a timber-framed pedestrian pier located towards the south end of the park. The "T" shaped pier, oriented perpendicular to the shoreline, is approximately 12 feet wide and extends approximately 161 feet offshore. The outboard end of the pier widens to 50 feet for the last 28 feet of the pier. The pier is founded on treated timber plumb piles, with timber pile caps, and timber cross bracing between some of the piles. The deck is framed with treated timber 4x12 stringers spaced at approximately 2 feet on center. Pier decking is composed of treated timber 3x12 planks laid flat. Four firewalls are located equal distance along the pier length. Additional features include two swimming ladders and a group of benches at the outboard end of the pier. Four light fixtures are evenly spaced along the length of the south side of the pier.

A structural assessment was conducted during preliminary stages of the shoreline renovation project and concluded that the pier, overall, is in good condition. Dive inspection indicated a few broken or missing cross brace members and a few deteriorated pile cap sections are identified for replacement. Overall the structural integrity of the timber decking is satisfactory condition however, decking is worn and scheduled to be replace by ADA fiberglass grating during the renovation.

B. CODES AND STANDARDS

Codes and Standards for this project conforms to the International Building Code (IBC) and International Existing Building Code (IEBC) 2015 Edition per the requirements of Kirkland Municipal Code and State Law RCW 19.27. Other design references include

- Minimum Design Loads for Buildings and Other Structures, ASCE 7-10
- American Institute of Steel Construction Manual (AISC Manual) 14th edition
- Building Code Requirements for Structural Concrete, ACI 318-14
- National Design Specification (NDS 2012)

C. DESIGN LOADS

Gravity Loads

Dead loads: Weight of all materials of construction (new and existing) incorporated in the renovated pier structure.

Note: weight of new FRP grating will be less than existing timber deck boards to be replaced. Overall distribution of weight for the new grating will be similar to existing conditions.

Live loads

There is some ambiguity of the appropriate occupancy or use of the pier and bulkhead steps, therefore the highest load for pedestrian areas was chosen per Table 1607.1, IBC 2015 (Assembly Area, Recreation Uses, Yards and Terraces, Pedestrians) In all occupancy or use classifications, the largest uniform load is 100 psf (with the exception of skating rinks which clearly does not apply.)

D. MATERIAL PROPERTIES

a. CONCRETE

- f'c = 5,000PSI
- Reinforcement - A706, Fy = 60KSI

b. STEEL

- Pipe – A53 Gr. B, Fy = 35KSI
- Angles Bars and Plates – A36, Fy = 36 KSI
- Tubular Sections – A500 Gr B, Fy = 46 KSI

c. TIMBER

- Douglas Fir- Larch, No. 1 and Better
  - F_b = 1,200 psi
  - F_v = 180 psi
  - $F_{c\ perp}$ = 625 psi
  - F_c = 1,550

TABLE OF CONTENTS

1. **Timber Deck Replacement with Fiber Reinforced Grating**
2. **Guard Rail Calculations**

Sheet No ..... of .....
Project # .....

Project DAVID BRINK PARK Computed by CRE Date 6/23/20
Subject DECKING REPLACEMENT Checked by ..... Date .....

DECKING REPLACEMENT

TYPICAL STRINGER SPACING IS 2'-0" O.C. OR LESS THROUGHOUT STRUCTURE

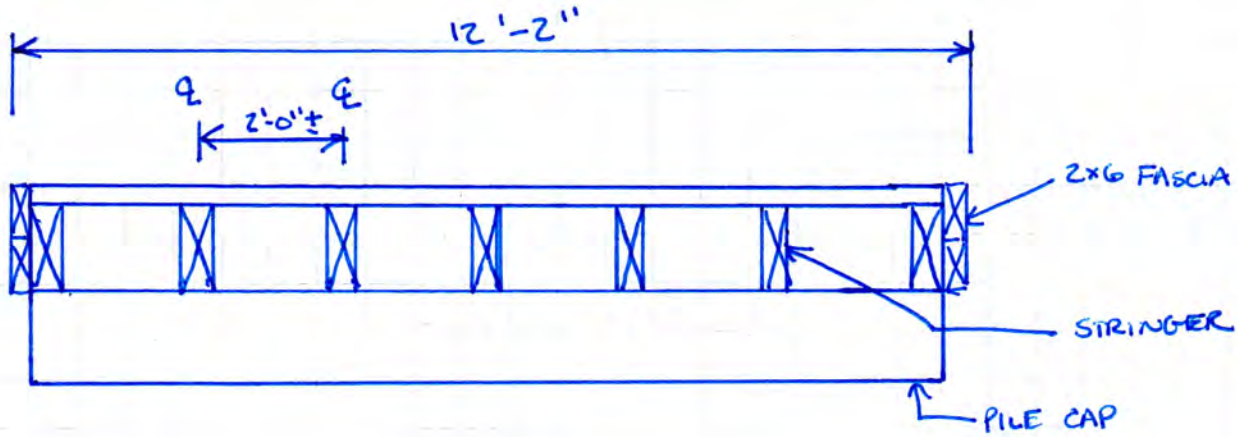

CONSERVATIVELY ASSUME $\boxed{2'\text{-}0''}$ FOR MAX NOMINAL CLR SPAN

FOR DECKING REPLACEMENT, USE FIBERGRATE MOLDED GRATING "MICRO MESH"

MAX ALLOWABLE DEFLECTION $= \frac{L}{360} = \frac{24''}{360} = .0667''$

PER LOAD TABLE (ATTACHED) MAX Δ @ 100PSF $= .04''$ OF 1½" GRATE

$.04'' < .0667''$ $\boxed{\text{OK}}$ FOR SIMPLE SPAN

Sheet No ..... of .....
Project # .....

Project DAVID BRINK PARK | Computed by CRE | Date 6/23/20
Subject DECKING REPLACEMENT | Checked by | Date

DECKING REPLACEMENT CONTINUED

CONFIRM Δ UNDER MULTISPAN

DETERMINE EI OF 1½" GRATE

Δ @ 24" L = .04"

FOR SIMPLE SUPPORT

$$\Delta = \frac{5wl^4}{384\,EI} \Rightarrow .04'' = \frac{5((100\,PSF + 4.5\,PSF)/144\,(24\,in)^4}{384\,EI}$$

$$EI = 78{,}375\ psi\ (in^4)$$

FOR MULTISPAN ⇒ 3 SUPPORTS + 1 SPAN LOADED

$$\Delta = \frac{0.0092\,wl^4}{EI}$$

$$\Delta = \frac{.0092((104.5)/144)\,(24in)^4}{78{,}375} = .0283\,in$$

$$\Delta_{max} = \frac{24''}{360} = .0667 > .0283\,in \quad \boxed{OKAY}$$

Load Tables - Fibergrate® Molded Gratings

MOLDED GRATING UNIFORM LOAD TABLES - DEFLECTION IN INCHES													
CLEAR SPAN (in)	STYLE		LOAD (psf)									MAX RECOM. LOAD (psf)	ULTIMATE CAPACITY (psf)
	DEPTH (in)	MESH (in x in)	50	65	100	150	200	300	500	1000	2000		
12	5/8	1 x 4	0.01	0.02	0.03	0.04	0.05	0.08	--	--	--	1540	7720
	3/4	1 x 4	<.01	<.01	0.01	0.01	0.02	0.02	0.04	0.08	0.15	1350	8130
	3/4	1-1/2 x 1-1/2	<.01	<.01	0.01	0.02	0.02	0.04	0.06	0.12	--	1000	6000
	1	3/4 x 3/4	<.01	<.01	<.01	<.01	0.01	0.02	0.03	0.06	0.12	1770	8880
	1	3/4 x 4	<.01	<.01	<.01	<.01	<.01	0.01	0.02	0.04	0.08	2800	14040
	1	1 x 4	<.01	<.01	<.01	<.01	<.01	0.01	0.02	0.05	0.09	2140	10700
	1	1-1/2 x 1-1/2	<.01	<.01	<.01	<.01	<.01	0.02	0.04	0.08	0.16	1420	7120
	1	2 x 2	<.01	0.01	0.02	0.03	0.04	0.06	--	--	--	1020	5140
	1-1/4	1-1/2 x 1-1/2	<.01	<.01	<.01	<.01	<.01	0.01	0.02	0.04	--	1110	6660
	1-1/2*	1-1/2 x 1-1/2	<.01	<.01	<.01	<.01	<.01	0.01	0.02	0.04	0.07	3200	16000
	2	2 x 2	<.01	<.01	<.01	<.01	<.01	<.01	0.01	0.02	0.04	3840	19240
18	5/8	1 x 4	0.05	0.07	0.11	0.16	0.22	--	--	--	--	680	3410
	3/4	1 x 4	0.02	0.02	0.04	0.06	0.08	0.11	0.19	--	--	600	3610
	3/4	1-1/2 x 1-1/2	0.03	0.04	0.06	0.09	0.12	0.18	0.30	--	--	440	2660
	1	3/4 x 3/4	0.01	0.02	0.03	0.04	0.06	0.08	0.14	0.28	--	780	3940
	1	3/4 x 4	0.01	0.01	0.02	0.03	0.04	0.06	0.10	0.20	0.40	1240	6200
	1	1 x 4	0.01	0.01	0.02	0.03	0.04	0.07	0.11	0.22	0.44	950	4750
	1	1-1/2 x 1-1/2	0.02	0.02	0.04	0.06	0.08	0.11	0.2	0.38	--	630	3170
	1	2 x 2	0.04	0.05	0.08	0.11	--	--	--	--	--	450	2290
	1-1/4	1-1/2 x 1-1/2	0.01	0.01	0.02	0.03	0.04	0.06	0.09	0.19	--	740	4440
	1-1/2*	1-1/2 x 1-1/2	<.01	<.01	0.01	0.02	0.03	0.04	0.07	0.14	0.28	1420	7100
	2	2 x 2	<.01	<.01	0.01	0.01	0.02	0.03	0.04	0.09	0.17	1850	9280
24	5/8	1 x 4	0.15	0.19	0.3	0.45	--	--	--	--	--	380	1920
	3/4	1 x 4	0.06	0.08	0.12	0.18	0.24	0.36	--	--	--	330	2030
	3/4	1-1/2 x 1-1/2	0.09	0.12	0.18	0.28	0.37	--	--	--	--	250	1500
	1	3/4 x 3/4	0.04	0.05	0.08	0.12	0.16	0.24	0.41	--	--	440	2220
	1	3/4 x 4	0.03	0.04	0.06	0.09	0.12	0.18	0.30	--	--	700	3500
	1	1 x 4	0.04	0.05	0.07	0.11	0.15	0.22	0.37	--	--	530	2670
	1	1-1/2 x 1-1/2	0.06	0.08	0.12	0.19	0.25	0.37	--	--	--	350	1780
	1	2 x 2	0.11	0.14	0.21	0.32	--	--	--	--	--	250	1280
	1-1/4	1-1/2 x 1-1/2	0.03	0.04	0.06	0.09	0.11	0.17	0.29	--	--	440	2660
	1-1/2*	1-1/2 x 1-1/2	0.02	0.03	0.04	0.06	0.08	0.12	0.21	0.42	--	800	4000
	2	2 x 2	0.01	0.01	0.02	0.03	0.04	0.06	0.10	0.20	--	1040	5220
30	5/8	1 x 4	0.32	0.41	--	--	--	--	--	--	--	240	1230
	3/4	1 x 4	0.13	0.17	0.26	0.40	--	--	--	--	--	210	1300
	3/4	1-1/2 x 1-1/2	0.17	0.23	0.35	--	--	--	--	--	--	160	960
	1	3/4 x 3/4	0.10	0.13	0.20	0.29	0.39	--	--	--	--	280	1400
	1	3/4 x 4	0.07	0.10	0.15	0.22	0.30	0.44	--	--	--	440	2200
	1	1 x 4	0.08	0.11	0.17	0.26	0.34	--	--	--	--	340	1710
	1	1-1/2 x 1-1/2	0.14	0.18	0.27	0.41	--	--	--	--	--	220	1140
	1	2 x 2	0.24	0.31	0.48	--	--	--	--	--	--	160	820
	1-1/4	1-1/2 x 1-1/2	0.08	0.10	0.15	0.23	0.30	0.46	--	--	--	280	1700
	1-1/2*	1-1/2 x 1-1/2	0.05	0.06	0.09	0.14	0.18	0.27	0.46	--	--	510	2560
	2	2 x 2	0.02	0.03	0.05	0.07	0.09	0.14	0.26	0.45	--	660	3340
36	3/4	1 x 4	0.25	0.33		--	--	--	--	--	--	150	900
	3/4	1-1/2 x 1-1/2	0.39	--	--	--	--	--	--	--	--	110	660
	1	3/4 x 3/4	0.20	0.26	0.40	--	--	--	--	--	--	190	990
	1	3/4 x 4	0.15	0.20	0.31	0.46	--	--	--	--	--	310	1500
	1	1 x 4	0.16	0.21	0.32	0.49	--	--	--	--	--	230	1180
	1	1-1/2 x 1-1/2	0.31	0.40	--	--	--	--	--	--	--	150	790
	1	2 x 2	0.46	--	--	--	--	--	--	--	--	110	570
	1-1/4	1-1/2 x 1-1/2	0.14	0.18	0.28	0.42	--	--	--	--	--	190	1180
	1-1/2*	1-1/2 x 1-1/2	0.1	0.13	0.20	0.30	0.40	--	--	--	--	350	1770
	2	2 x 2	0.04	0.06	0.09	0.13	0.18	0.26	0.44	--	--	460	2320
42	1	3/4 x 3/4	0.37	0.48	--	--	--	--	--	--	--	140	720
	1	3/4 x 4	0.28	0.37	--	--	--	--	--	--	--	220	1100
	1	1 x 4	0.33	0.43	--	--	--	--	--	--	--	170	870
	1	1-1/2 x 1-1/2	0.49	--	--	--	--	--	--	--	--	110	580
	1-1/4	1-1/2 x 1-1/2	0.26	0.34	--	--	--	--	--	--	--	140	870
	1-1/2*	1-1/2 x 1-1/2	0.17	0.22	0.34	--	--	--	--	--	--	260	1300
	2	2 x 2	0.08	0.10	0.16	0.24	0.32	0.47	--	--	--	340	1700
46	1	1 x 4	0.48	--	--	--	--	--	--	--	--	140	720
	1-1/4	1-1/2 x 1-1/2	0.37	0.49	--	--	--	--	--	--	--	120	720
48	1	3/4 x 4	0.48	--	--	--	--	--	--	--	--	170	800
	1-1/2*	1-1/2 x 1-1/2	0.28	0.37	--	--	--	--	--	--	--	200	1000
	2	2 x 2	0.14	0.18	0.28	0.42	--	--	--	--	--	260	1300
54	1-1/2*	1-1/2 x 1-1/2	0.42	--	--	--	--	--	--	--	--	150	790
	2	2 x 2	0.21	0.27	0.42	--	--	--	--	--	--	200	1030
60	2	2 x 2	0.37	0.47	--	--	--	--	--	--	--	160	830

***Also represents load data for Micro-Mesh 1-1/2" deep x 3/4" square top mesh grating (4' x 12') panel.**

NOTES:

1. All gratings were tested in accordance with the ANSI Standard: FRP Composites Grating Manual for Pultruded and Molded Grating and Stair Treads.
2. Maximum Recommended Load represents a 5:1 factor of safety on Ultimate Capacity.
3. For covered grating use a multiplier of 0.5. This is limited to gratings of 1" - 2" depths. It is not recommended covering 3/4" or 1/2" gratings.
4. Max recommended and ultimate loads do not change as a result of adding a 1/8" deep covered plate.

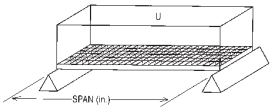

Load Tables - Fibergrate® Molded Gratings

MOLDED GRATING CONCENTRATED POINT LOAD TABLES - DEFLECTION IN INCHES									
CLEAR SPAN (in)	STYLE		LOAD (lb)						
	DEPTH (in)	MESH (in x in)	50	100	200	300	500	1000	2000
18	5/8	1 x 4	0.08	0.16	0.32	0.48	--	--	--
	1	1 x 4	<.01	0.01	0.02	0.03	0.06	0.11	0.22
	1	1-1/2 x 1-1/2	<.01	0.01	0.03	0.04	0.07	0.14	0.27
	1	2 x 2	0.04	0.08	0.16	0.24	0.40	--	--
	1-1/2*	1-1/2 x 1-1/2	<.01	<.01	0.01	0.02	0.03	0.06	0.13
	2	2 x 2	<.01	<.01	0.01	0.02	0.03	0.05	0.1
24	5/8	1 x 4	0.19	0.38	--	--	--	--	--
	1	1 x 4	0.01	0.02	0.05	0.07	0.12	0.24	0.49
	1	1-1/2 x 1-1/2	0.01	0.03	0.05	0.08	0.13	0.26	--
	1	2 x 2	0.1	0.19	0.38	--	--	--	--
	1-1/4	1-1/2 x 1-1/2	<.01	0.01	0.03	0.04	0.07	--	--
	1-1/2*	1-1/2 x 1-1/2	<.01	0.01	0.02	0.03	0.06	0.12	0.23
	2	2 x 2	<.01	<.01	0.01	0.02	0.04	0.07	0.14
30	5/8	1 x 4	0.37	--	--	--	--	--	--
	1	1 x 4	0.02	0.05	0.09	0.14	0.23	0.45	--
	1	1-1/2 x 1-1/2	0.03	0.05	0.1	0.15	0.26	--	--
	1	2 x 2	0.19	0.37	--	--	--	--	--
	1-1/4	1-1/2 x 1-1/2	0.01	0.03	0.05	0.08	0.13	--	--
	1-1/2*	1-1/2 x 1-1/2	0.01	0.02	0.04	0.06	0.1	0.2	--
	2	2 x 2	<.01	0.01	0.02	0.03	0.06	0.12	0.23
36	1	1 x 4	0.04	0.07	0.14	0.21	0.35	--	--
	1	1-1/2 x 1-1/2	0.03	0.07	0.14	0.2	0.34	--	--
	1	2 x 2	0.32	--	--	--	--	--	--
	1-1/4	1-1/2 x 1-1/2	0.02	0.03	0.07	0.10	0.16	--	--
	1-1/2*	1-1/2 x 1-1/2	0.02	0.03	0.06	0.09	0.15	0.3	--
	2	2 x 2	<.01	0.01	0.03	0.04	0.07	0.15	0.29
42	1	1 x 4	0.05	0.11	0.21	0.32	--	--	--
	1	1-1/2 x 1-1/2	0.06	0.12	0.23	0.35	--	--	--
	1-1/4	1-1/2 x 1-1/2	0.03	0.06	0.11	0.17	0.28	--	--
	1-1/2*	1-1/2 x 1-1/2	0.02	0.04	0.09	0.13	0.22	0.44	--
	2	2 x 2	0.01	0.02	0.05	0.08	0.12	0.25	0.5
46	1	1 x 4	0.07	0.13	0.26	0.39	--	--	--
	1	1-1/2 x 1-1/2	0.07	0.14	0.28	0.42	--	--	--
	1-1/4	1-1/2 x 1-1/2	0.04	0.07	0.15	0.22	0.37	--	--
48	1-1/2*	1-1/2 x 1-1/2	0.03	0.06	0.12	0.18	0.29	--	--
	2	2 x 2	0.01	0.03	0.06	0.09	0.15	0.3	--
54	1-1/2*	1-1/2 x 1-1/2	0.04	0.07	0.15	0.22	0.37	--	--
58	1-1/2*	1-1/2 x 1-1/2	0.04	0.08	0.17	0.25	0.42	--	--

*** Also represents load data for Micro-Mesh 1-1/2" deep x 3/4" square top mesh grating (4' x 12') panel.**

NOTES:

1. All gratings were tested in accordance with the ANSI Standard: FRP Composites Grating Manual for Pultruded and Molded Grating and Stair Treads.
2. For covered grating use a multiplier of 0.5. This is limited to gratings of 1" - 2" depths. It is not recommended covering 3/4" or 1/2" gratings.
3. Max recommended and ultimate loads do not change as a result of adding a 1/8" deep covered plate.

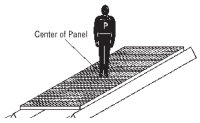

Load Tables - Fibergrate® Molded Gratings

MOLDED GRATING CONCENTRATED LINE LOAD TABLES - DEFLECTION IN INCHES											
CLEAR SPAN (in)	STYLE		LOAD (lb/ft of width)							MAX RECOM. LOAD (lb/ft of width)	ULTIMATE CAPACITY (lb/ft of width)
	DEPTH (in)	MESH (in x in)	50	100	200	300	500	1000	2000		
12	5/8	1 x 4	0.02	0.04	0.09	0.13	--	--	--	770	3860
	3/4	1 x 4	<.01	.01	0.02	0.04	0.06	0.12	--	670	4060
	3/4	1-1/2 x 1-1/2	0.01	0.02	0.04	0.06	0.10	--	--	500	3000
	1	<.01	<.01	<.01	0.02	0.03	0.05	0.1	0.2	880	4440
	1	<.01	<.01	<.01	0.01	0.02	0.03	0.07	0.13	1400	7020
	1	<.01	<.01	0.01	0.02	0.02	0.04	0.08	--	1070	5350
	1	<.01	<.01	0.01	0.03	0.04	0.06	0.13	--	710	3560
	1	0.02	0.02	0.03	0.06	0.09	--	--	--	510	2570
	1-1/4	1-1/2 x 1-1/2	<.01	<.01	0.01	0.02	0.03	0.06	--	110	6660
	1-1/2*	1-1/2 x 1-1/2	<.01	<.01	0.01	0.02	0.03	0.05	0.11	1600	8000
	2	2 x 2	<.01	<.01	<.01	0.01	0.02	0.03	0.06	1920	9620
18	5/8	1 x 4	0.06	0.12	0.23	0.35	--	--	--	510	2560
	3/4	1 x 4	0.02	0.04	0.08	0.12	0.20	--	--	450	2710
	3/4	1-1/2 x 1-1/2	0.03	0.06	0.13	0.19	0.32	--	--	330	2000
	1	3/4 x 3/4	0.01	0.03	0.06	0.09	0.15	0.29	--	590	2960
	1	3/4 x 4	0.01	0.02	0.04	0.06	0.11	0.21	0.43	930	4680
	1	1 x 4	0.01	0.02	0.05	0.07	0.12	0.23	--	710	3560
	1	1-1/2 x 1-1/2	0.02	0.04	0.08	0.12	0.2	0.41	--	470	2370
	1	2 x 2	0.04	0.08	0.16	--	--	--	--	340	1710
	1-1/4	1-1/2 x 1-1/2	0.01	0.02	0.04	0.06	0.10	--	--	540	3240
	1-1/2*	1-1/2 x 1-1/2	0.01	0.02	0.03	0.05	0.08	0.15	0.3	1060	5330
	2	2 x 2	<.01	0.01	0.02	0.03	0.05	0.09	0.18	1390	6960
24	5/8	1 x 4	0.12	0.24	0.48	--	--	--	--	380	1920
	3/4	1 x 4	0.05	0.09	0.19	0.28	0.47	--	--	330	2030
	3/4	1-1/2 x 1-1/2	0.07	0.15	0.30	044	--	--	--	250	1500
	1	3/4 x 3/4	0.03	0.07	0.13	0.2	0.33	--	--	440	2220
	1	3/4 x 4	0.02	0.05	0.10	0.15	0.24	0.48	--	700	3510
	1	1 x 4	0.03	0.06	0.12	0.18	0.3	--	--	530	2670
	1	1-1/2 x 1-1/2	0.05	0.1	0.2	0.3	0.49	--	--	350	1780
	1	2 x 2	0.09	0.17	--	--	--	--	--	250	1280
	1-1/4	1-1/2 x 1-1/2	0.02	0.05	0.09	0.14	0.23	--	--	460	2760
	1-1/2*	1-1/2 x 1-1/2	0.02	0.03	0.07	0.1	0.17	0.33	--	800	4000
	2	2 x 2	0.01	0.02	0.03	0.05	0.08	0.16	--	1040	5220
30	5/8	1 x 4	0.2	0.41	--	--	--	--	--	300	1530
	3/4	1 x 4	0.08	0.17	0.34	--	--	--	--	270	1620
	3/4	1-1/2 x 1-1/2	0.11	0.22	0.45	--	--	--	--	200	1200
	1	3/4 x 3/4	0.06	0.13	0.25	0.38	--	--	--	350	1770
	1	3/4 x 4	0.05	0.09	0.19	0.28	0.47	--	--	560	2800
	1	1 x 4	0.05	0.11	0.22	0.32	--	--	--	420	2140
	1	1-1/2 x 1-1/2	0.09	0.18	0.35	--	--	--	--	280	1420
	1	2 x 2	0.15	0.31	--	--	--	--	--	200	1020
	1-1/4	1-1/2 x 1-1/2	0.05	0.10	0.19	0.29	0.49	--	--	350	2130
	1-1/2*	1-1/2 x 1-1/2	0.03	0.06	0.12	0.18	0.29	--	--	640	3200
	2	2 x 2	0.01	0.03	0.06	0.09	0.14	0.29	--	830	4180
36	5/8	1 x 4	0.32	--	--	--	--	--	--	250	1270
	3/4	1 x 4	0.13	0.27	--	--	--	--	--	220	1350
	3/4	1-1/2 x 1-1/2	0.21	0.42	--	--	--	--	--	160	1000
	1	3/4 x 3/4	0.11	0.21	0.42	--	--	--	--	290	1480
	1	3/4 x 4	0.08	0.16	0.33	0.49	--	--	--	460	2340
	1	1 x 4	0.09	0.17	0.34	--	--	--	--	350	1780
	1	1-1/2 x 1-1/2	0.16	0.33	--	--	--	--	--	230	1180
	1	2 x 2	0.25	0.49	--	--	--	--	--	170	850
	1-1/4	1-1/2 x 1-1/2	0.07	0.15	0.30	0.45	--	--	--	290	1770
	1-1/2*	1-1/2 x 1-1/2	0.05	0.11	0.21	0.32	--	--	--	530	2660
	2	2 x 2	0.02	0.05	0.09	0.14	0.23	0.47	--	690	3480
42	1	3/4 x 3/4	0.17	0.34	--	--	--	--	--	250	1260
	1	3/4 x 4	0.13	0.26	--	--	--	--	--	400	2000
	1	1 x 4	0.15	0.3	--	--	--	--	--	300	1520
	1	1-1/2 x 1-1/2	0.26	0.45	--	--	--	--	--	200	1010
	1	2 x 2	0.38	--	--	--	--	--	--	140	730
	1-1/4	1-1/2 x 1-1/2	0.12	0.24	0.48	--	--	--	--	250	1520
	1-1/2*	1-1/2 x 1-1/2	0.08	0.16	0.32	0.47	--	--	--	450	2280
	2	2 x 2	0.04	0.07	0.14	0.22	0.36	--	--	590	2980
46	1	1 x 4	0.20	0.40	--	--	--	--	--	270	1390
	1	1-1/2 x 1-1/2	0.32	--	--	--	--	--	--	180	900
	1-1/4	1-1/2 x 1-1/2	0.16	0.31	--	--	--	--	--	230	1390
48	1	3/4 x 3/4	0.25	--	--	--	--	--	--	220	1110
	1	3/4 x 4	0.19	0.39	--	--	--	--	--	350	1750
	1-1/2*	1-1/2 x 1-1/2	0.11	0.23	0.45	--	--	--	--	400	2000
	2	2 x 2	0.06	0.11	0.22	0.33	--	--	--	520	2610
54	1-1/2*	1-1/2 x 1-1/2	0.15	0.3	--	--	--	--	--	350	1770
	2	2 x 2	0.07	0.15	0.3	0.45	--	--	--	460	2320
60	2	2 x 2	0.12	0.23	0.47	--	--	--	--	410	2090

*** Also represents load data for Micro-Mesh 1-1/2" deep x 3/4" square top mesh grating (4' x 12') panel.**

NOTES:

1. All gratings were tested in accordance with the ANSI Standard: FRP Composites Grating Manual for Pultruded and Molded Grating and Stair Treads.
2. Maximum Recommended Load represents a 5:1 factor of safety on Ultimate Capacity.
3. For covered grating use a multiplier of 0.5. This is limited to gratings of 1" - 2" depths. It is not recommended covering 3/4" or 1/2" gratings.
4. Max recommended and ultimate loads do not change as a result of adding a 1/8" deep covered plate.

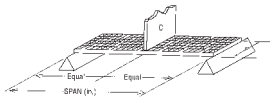

Sheet No 1 of 2

Project # WA19.0173.00

Project DAVID BRINK PARK | Computed by BAH | Date 6/11/20

Subject HANDRAIL CALCULATIONS | Checked by | Date

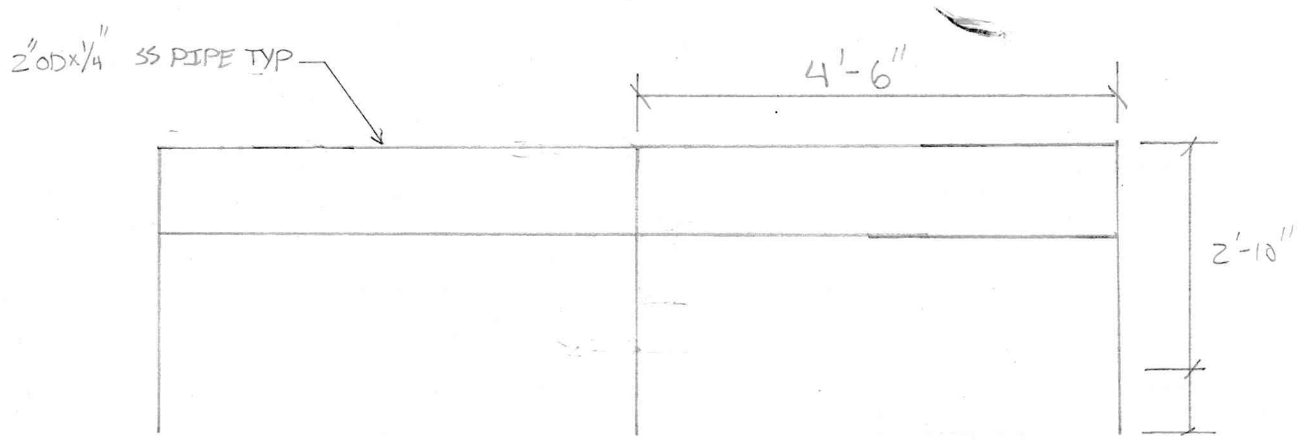

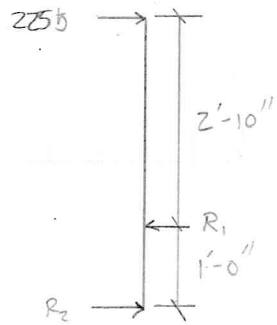

$R_1 = \frac{225\#}{12in}(12in + 34in) = 863\#$

$R_2 = 225\# \cdot 34in / 12in = 637\#$

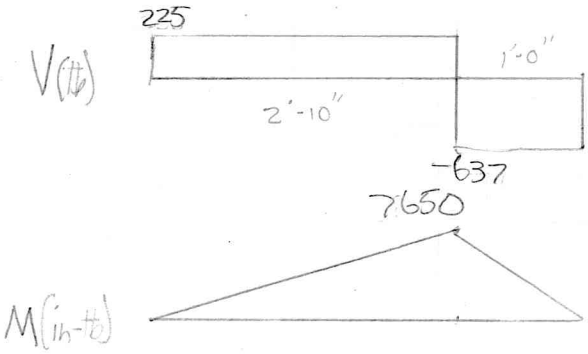

$M_U = \frac{M}{S} = \frac{7.7\ K\text{-}in}{0.0945875\ d^3} = 9.8\ ksi$

Project DAVID BRINK PARK Computed by BAH Date 6/11/20
Subject HANDRAIL CALCULATIONS Checked by Date

Capacity:

- Yielding

$$M_n = F_y Z$$

$$F_y = 36 ksi$$

$$Z_x = \frac{2 in^3}{6} = 1.3 in^3$$

$$M_n = 46.8 ksi$$

$$\phi M_n = 0.9(46.8 ksi) = 42.12 ksi$$

- Local Buckling

$$M_n = \left[\frac{0.021 E}{\left(\frac{D}{t}\right)} + F_y\right] S$$

$E = 29000$ ksi
$D = 2$ in
$t = 1/2$ in
$F_y = 36$ ksi

$$S = 0.098175 d^3 = 0.7854$$

$$= 88.06 ksi$$

$$\phi M_n = 0.9(88.06 ksi) = 79.26 ksi$$

$\phi M_n \gg M_u \therefore$ ok ✓

Company:		Page:	1
Address:		Specifier:	
Phone I Fax:	|	E-Mail:	
Design:	Concrete - Jun 11, 2020	Date:	9/10/2020
Fastening point:			

Specifier's comments:

1 Input data

Anchor type and diameter:	**HIT-HY 200 + HIT-Z 3/8**
Item number:	2018440 HIT-Z 3/8" x 4 3/8" (element) / 2022793 HIT-HY 200-R (adhesive)
Effective embedment depth:	$h_{ef,opti}$ = 2.375 in. ($h_{ef,limit}$ = 3.750 in.)
Material:	DIN EN ISO 4042
Evaluation Service Report:	ESR-3187
Issued I Valid:	4/1/2020 | 3/1/2022
Proof:	Design Method ACI 318-14 / Chem
Stand-off installation:	e_b = 0.000 in. (no stand-off); t = 0.500 in.
Anchor plate[R] :	l_x x l_y x t = 8.000 in. x 8.000 in. x 0.500 in.; (Recommended plate thickness: not calculated)
Profile:	Steel pipe, PIPE2STD; (L x W x T) = 2.380 in. x 2.380 in. x 0.154 in.
Base material:	cracked concrete, 2500, f_c' = 2,500 psi; h = 6.000 in., Temp. short/long: 32/32 °F
Installation:	**hammer drilled hole, Installation condition: Dry**
Reinforcement:	tension: condition B, shear: condition B; no supplemental splitting reinforcement present edge reinforcement: none or < No. 4 bar

[R] - The anchor calculation is based on a rigid anchor plate assumption.

Geometry [in.] & Loading [lb, in.lb]

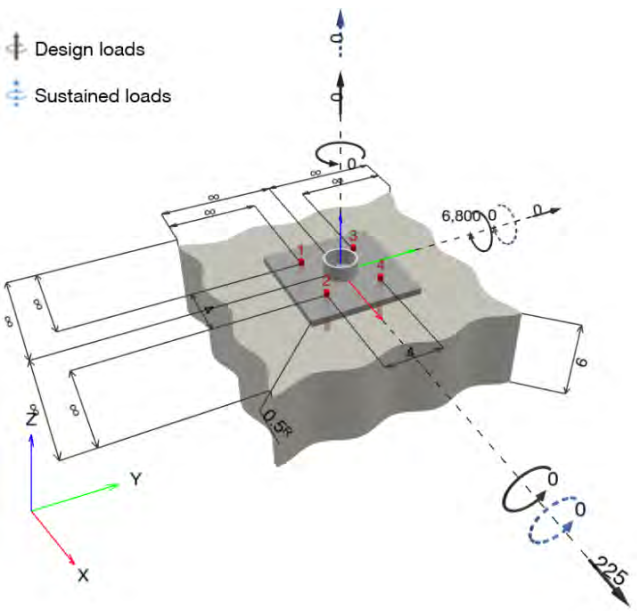

1.1 Design results

Case	Description	Forces [lb] / Moments [in.lb]	Seismic	Max. Util. Anchor [%]
1	Combination 1	$N = 0$; $V_x = 225$; $V_y = 0$; $M_x = 0$; $M_y = 6{,}800$; $M_z = 0$; $N_{sus} = 0$; $M_{x,sus} = 0$; $M_{y,sus} = 0$;	no	39

PROFIS Engineering (c) 2003-2020 Hilti AG, FL-9494 Schaan Hilti is a registered Trademark of Hilti AG, Schaan

2 Proof I Utilization (Governing Cases)

		Design values [lb]		Utilization	
Loading	**Proof**	**Load**	**Capacity**	**β_N / β_V [%]**	**Status**
Tension	Concrete Breakout Failure	1,352	3,518	39 / -	OK
Shear	Pryout Strength (Concrete Breakout Strength controls)	225	5,309	- / 5	OK

Loading	β_N	β_V	ζ	Utilization $\beta_{N,V}$ [%]	Status
Combined tension and shear loads	0.384	0.042	5/3	21	OK

3 Warnings

- Please consider all details and hints/warnings given in the detailed report!

Fastening meets the design criteria!

Input data and results must be checked for conformity with the existing conditions and for plausibility!
PROFIS Engineering (c) 2003-2020 Hilti AG, FL-9494 Schaan Hilti is a registered Trademark of Hilti AG, Schaan

4 Remarks; Your Cooperation Duties

- Any and all information and data contained in the Software concern solely the use of Hilti products and are based on the principles, formulas and security regulations in accordance with Hilti's technical directions and operating, mounting and assembly instructions, etc., that must be strictly complied with by the user. All figures contained therein are average figures, and therefore use-specific tests are to be conducted prior to using the relevant Hilti product. The results of the calculations carried out by means of the Software are based essentially on the data you put in. Therefore, you bear the sole responsibility for the absence of errors, the completeness and the relevance of the data to be put in by you. Moreover, you bear sole responsibility for having the results of the calculation checked and cleared by an expert, particularly with regard to compliance with applicable norms and permits, prior to using them for your specific facility. The Software serves only as an aid to interpret norms and permits without any guarantee as to the absence of errors, the correctness and the relevance of the results or suitability for a specific application.
- You must take all necessary and reasonable steps to prevent or limit damage caused by the Software. In particular, you must arrange for the regular backup of programs and data and, if applicable, carry out the updates of the Software offered by Hilti on a regular basis. If you do not use the AutoUpdate function of the Software, you must ensure that you are using the current and thus up-to-date version of the Software in each case by carrying out manual updates via the Hilti Website. Hilti will not be liable for consequences, such as the recovery of lost or damaged data or programs, arising from a culpable breach of duty by you.

PROFIS Engineering (c) 2003-2020 Hilti AG, FL-9494 Schaan Hilti is a registered Trademark of Hilti AG, Schaan

APPENDIX H:
ARBORIST REPORT

City of Kirkland

Arborist Tree Condition Assessment, David E. Brink Park
November 2020

Tree Tag ID Number	Tree Scientific Name	Tree Common Name	DBH (inches)	Condition Rating	Photo	Proposed Action	Notes
1800	*Prunus sp.*	Flowering cherry, Japanese cherry	9	Poor	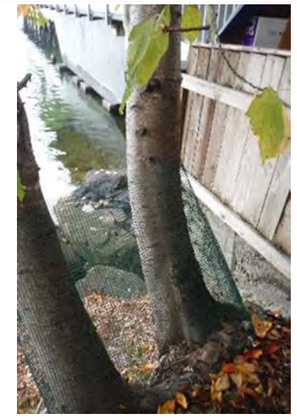	**Protect in place**; install temporary 6-ft-high chain-link fencing as shown on D-1.2 to protect group of trees to be retained	Tree leaning and rooted into boulder bulkhead. Roots are exposed and cracked with fungus growth at the base of the tree. Rooted close to Tree 1799
1799	*Prunus sp.*	Flowering cherry, Japanese cherry	9	Poor	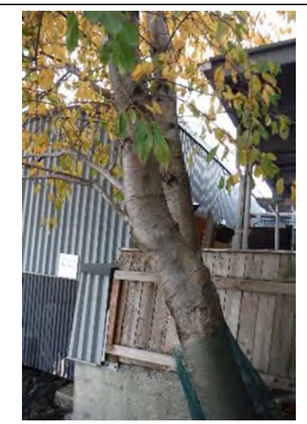	**Protect in place**; install temporary 6-ft-high chain-link fencing as shown on D-1.2 to protect group of trees to be retained	Tree leaning and rooted into boulder bulkhead. Roots are exposed and cracked with fungus growth at the base of the tree. Rooted close to Tree 1800
1798	*Prunus sp.*	Flowering cherry, Japanese cherry	15	Fair	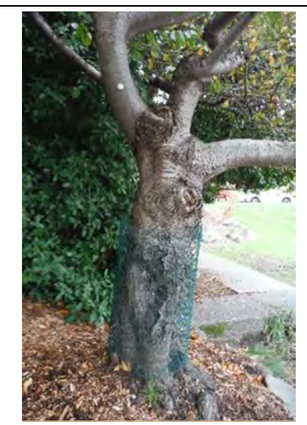	**Protect in place**; install temporary 6-ft-high chain-link fencing as shown on D-1.2 to protect group of trees to be retained	Roots are exposed and a crack is at the base of the stem. Past beaver damage on stem

Tree Tag ID Number	Tree Scientific Name	Tree Common Name	DBH (inches)	Condition Rating	Photo	Proposed Action	Notes
1797	*Magnolia grandiflora*	Southern magnolia or Bull bay	10/11	Good		**Remove**; this tree must be removed to expand the beach (it is within the grading limits)	Double-stemmed tree
1796	*Acer palmatum*	Japanese maple, Palmate maple, or Smooth Japanese maple	8/5/5/4/4	Good		**Protect in place**; install temporary 6-ft-high chain-link fencing as shown on D-1.2 to protect group of trees to be retained	Multi-stemmed tree
1795	*Acer palmatum*	Japanese maple, Palmate maple, or Smooth Japanese maple	8/5/6/4/3/3/3	Fair		**Protect in place**; install temporary 6-ft-high chain-link fencing as shown on D-1.2 to protect group of trees to be retained	Multi-stemmed tree. Some stems are dead

Tree Tag ID Number	Tree Scientific Name	Tree Common Name	DBH (inches)	Condition Rating	Photo	Proposed Action	Notes
1794	*Acer palmatum*	Japanese maple, Palmate maple, or Smooth Japanese maple	5/4/4	Good		**Protect in place**; install temporary 6-ft-high chain-link fencing as shown on D-1.1 to protect group of trees to be retained	This does not qualify as a tree per City of Kirkland City of Kirkland criteria in their Code which is: 95.10 Definitions (14.) Significant Tree. Multi-stemmed tree. Stump of a central stem at base of tree.
1793	*Cornus nuttallii*	Pacific dogwood or Mountain dogwood	4/3	Poor		**Protect in place**; install temporary 6-ft-high chain-link fencing as shown on D-1.1 to protect group of trees to be retained	This does not qualify as a tree per City of Kirkland City of Kirkland criteria in their Code which is: 95.10 Definitions (14.) Significant Tree. Damage to the upper branches and scars on the main stem bark
1792	*Chionanthus retusus*	Chinese fringe tree	4/4/4	Fair		**Protect in place**; install temporary 6-ft-high chain-link fencing as shown on D-1.1 to protect group of trees to be retained	This does not qualify as a tree per City of Kirkland City of Kirkland criteria in their Code which is: 95.10 Definitions (14.) Significant Tree. Multi-stemmed tree

Tree Tag ID Number	Tree Scientific Name	Tree Common Name	DBH (inches)	Condition Rating	Photo	Proposed Action	Notes
1791	*Populus nigra*	Lombardy poplar, Black poplar	84	Fair		**Protect in place**; install temporary 6-ft-high chain-link fencing as shown on D-1.1 to protect group of trees to be retained	Multi-stemmed tree. May be separate trees that have grown together. Fencing around the tree is beginning to become embedded in the tree growth
1790	*Acer palmatum*	Japanese maple, Palmate maple, or Smooth Japanese maple	5/4/4/3	Poor		**Protect in place**; install temporary 6-ft-high chain-link fencing as shown on D-1.1 to protect group of trees to be retained	This does not qualify as a tree per City of Kirkland City of Kirkland criteria in their Code which is: 95.10 Definitions (14.) Significant Tree. Tree has been heavily damaged by beaver in the past. Multi-stemmed tree with some dead or dying stems
1789	*Clerodendrum trichotomum*	Harlequin glorybower, Glorytree, or Peanut butter tree	4	Fair	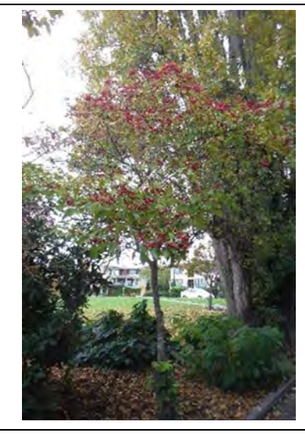	**Protect in place**; this tree is not on the park's property; however, proposed temporary 6-ft-high chain-link fencing will protect it during construction	This does not qualify as a tree per City of Kirkland City of Kirkland criteria in their Code which is: 95.10 Definitions (14.) Significant Tree. Damage and coppice growth at the base near past beaver damage. Upper branches cut or damaged by vehicles in adjacent driveway

Tree Tag ID Number	Tree Scientific Name	Tree Common Name	DBH (inches)	Condition Rating	Photo	Proposed Action	Notes
1788	*Acer palmatum*	Japanese maple, Palmate maple, or Smooth Japanese maple	5/4/4/3	Poor		**Remove**; this tree must be removed to expand the beach (it is within the grading limits)	This does not qualify as a tree per City of Kirkland City of Kirkland criteria in their Code which is: 95.10 Definitions (14.) Significant Tree. Tree has been heavily damaged by beaver in the past. Multi-stemmed tree
1787	*Clerodendrum trichotomum*	Harlequin glorybower, Glorytree, or Peanut butter tree	5	Poor		**Remove**; this tree must be removed to expand the beach (it is within the grading limits)	This does not qualify as a tree per City of Kirkland City of Kirkland criteria in their Code which is: 95.10 Definitions (14.) Significant Tree. Damage and coppice growth at the base near past beaver damage. Upper branches cut or damaged by vehicles in adjacent driveway
1786	*Acer triflorum*	Three-flowered maple	5/2	Fair		**Protect in place**; install temporary 6-ft-high chain-link fencing as shown on D-1.1 to protect group of trees to be retained	This does not qualify as a tree per City of Kirkland City of Kirkland criteria in their Code which is: 95.10 Definitions (14.) Significant Tree. Damage at the base, likely from lawn maintenance equipment

Tree Tag ID Number	Tree Scientific Name	Tree Common Name	DBH (inches)	Condition Rating	Photo	Proposed Action	Notes
1785	*Prunus cerasifera*	Purpleleaf Plum, Thundercloud purple-leaf plum	13	Poor		**Remove**; this tree must be removed to expand the beach (it is within the grading limits)	Beaver damage at the base with coppice growth. Broken limb at branching collar with exposed heartwood
1784	*Metasequoia glyptostroboides*	Dawn redwood	10	Good		**Remove**; this tree must be removed to expand the beach (it is within the grading limits)	This tree is healthy
1783	*Acer palmatum*	Japanese maple, Palmate maple, or Smooth Japanese maple	3/3/3/2	Fair		**Remove**; this tree must be removed to expand the beach (it is within the grading limits)	This does not qualify as a tree per City of Kirkland City of Kirkland criteria in their Code which is: 95.10 Definitions (14.) Significant Tree. Multi-stemmed tree, damage at the base

Tree Tag ID Number	Tree Scientific Name	Tree Common Name	DBH (inches)	Condition Rating	Photo	Proposed Action	Notes
1782	*Acer palmatum*	Japanese maple, Palmate maple, or Smooth Japanese maple	4	Poor		**Remove**; this tree must be removed to expand the beach (it is within the grading limits)	This does not qualify as a tree per City of Kirkland City of Kirkland criteria in their Code which is: 95.10 Definitions (14.) Significant Tree. Multi-stemmed tree. Beaver damage at the base
1781	*Acer palmatum*	Japanese maple, Palmate maple, or Smooth Japanese maple	3/3/3/3/2/2	Fair		**Remove**; this tree must be removed to expand the beach (it is within the grading limits)	This does not qualify as a tree per City of Kirkland City of Kirkland criteria in their Code which is: 95.10 Definitions (14.) Significant Tree. Multi-stemmed tree, damage at the base
1780	*Arctostaphylos manzanita*	Common manzanita	3/3/2/2/2	Good		**Remove**; this tree must be removed to expand the beach (it is within the grading limits)	This does not qualify as a tree per City of Kirkland City of Kirkland criteria in their Code which is: 95.10 Definitions (14.) Significant Tree. Multi-stemmed. Old stem stumps at base

Tree Tag ID Number	Tree Scientific Name	Tree Common Name	DBH (inches)	Condition Rating	Photo	Proposed Action	Notes
1779	*Arctostaphylos manzanita*	Common manzanita	4/4/4/3/3	Good		**Remove**; this tree must be removed to expand the beach (it is within the grading limits)	This does not qualify as a tree per City of Kirkland City of Kirkland criteria in their Code which is: 95.10 Definitions (14.) Significant Tree. Multi-stemmed. Old stem stumps at base
1778	*Arctostaphylos manzanita*	Common manzanita	5/4/4	Good		**Remove**; this tree must be removed to expand the beach (it is within the grading limits)	This does not qualify as a tree per City of Kirkland City of Kirkland criteria in their Code which is: 95.10 Definitions (14.) Significant Tree. Multi-stemmed. Old stem stumps at base
1777	*Thuja spp.*	American Arborvitae	5/3	Fair		**Protect in place**; no construction and/or grading activities are proposed adjacent to this tree	This is a cluster of arborvitae and not qualify as a tree per City of Kirkland City of Kirkland criteria in their Code which is: 95.10 Definitions (14.) Significant Tree. This tree has been heavily pruned and shaped and is part of an Arborvitae hedge adjacent to a structure
1776	*Thuja spp.*	American Arborvitae	5/2	Fair			
1775	*Thuja spp.*	American Arborvitae	5	Fair			
1774	*Thuja spp.*	American Arborvitae	4/4	Fair			
1773	*Thuja spp.*	American Arborvitae	5	Fair			
1772	*Thuja spp.*	American Arborvitae	4/3	Fair			
1771	*Thuja spp.*	American Arborvitae	6/5/3	Fair			

Tree Tag ID Number	Tree Scientific Name	Tree Common Name	DBH (inches)	Condition Rating	Photo	Proposed Action	Notes
1770	*Thuja spp.*	American Arborvitae	6	Fair		**Protect in place**; no construction and/or grading activities are proposed adjacent to this tree	This is a cluster of arborvitae and not qualify as a tree per City of Kirkland City of Kirkland criteria in their Code which is: 95.10 Definitions (14.) Significant Tree. This tree has been heavily pruned and shaped and is part of an Arborvitae hedge adjacent to a structure
1769	*Thuja spp.*	American Arborvitae	5/3	Fair			
1768	*Thuja spp.*	American Arborvitae	5/4	Fair			
1767	*Thuja spp.*	American Arborvitae	6	Fair			
1766	*Thuja spp.*	American Arborvitae	9	Fair			
1765	*Viburnum spp.*	Flowering viburnum	5	Good		**Protect in place**; no construction and/or grading activities are proposed adjacent to this tree	This does not qualify as a tree per City of Kirkland City of Kirkland criteria in their Code which is: 95.10 Definitions (14.) Significant Tree.
1764	*Magnolia soulangiana var.*	Spring tulip tree, Saucer magnolia	4	Good		**Protect in place**; no construction and/or grading activities are proposed adjacent to this tree	This does not qualify as a tree per City of Kirkland City of Kirkland criteria in their Code which is: 95.10 Definitions (14.) Significant Tree. Damage at the base of tree

Tree Tag ID Number	Tree Scientific Name	Tree Common Name	DBH (inches)	Condition Rating	Photo	Proposed Action	Notes
1763	*Hamamelis spp.*	Witch hazel	4/3	Good		**Protect in place**; install temporary 6-ft-high chain-link fencing as shown on D-1.2	This does not qualify as a tree per City of Kirkland City of Kirkland criteria in their Code which is: 95.10 Definitions (14.) Significant Tree.
1762	*Cupressus spp.*	Cypress	5/2	Excellent		**Remove**; this tree must be removed to accommodate the new ADA pathway (it is within the grading limits)	This does not qualify as a tree per City of Kirkland City of Kirkland criteria in their Code which is: 95.10 Definitions (14.) Significant Tree.

DBH: Diameter at Breast Height

Trees were tagged in November 2020. This graphic shows the corresponding tree tag number.

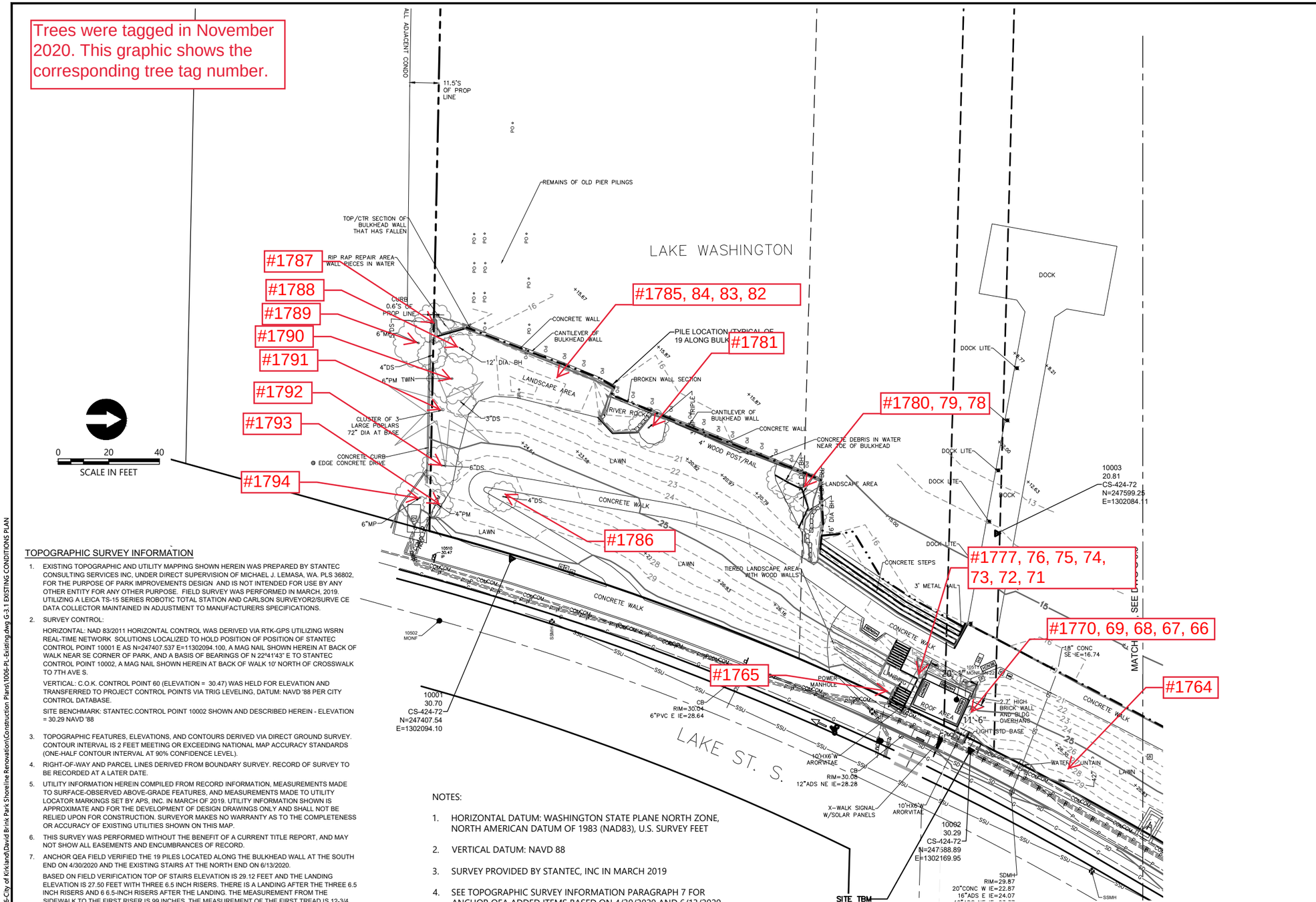

TOPOGRAPHIC SURVEY INFORMATION

1. EXISTING TOPOGRAPHIC AND UTILITY MAPPING SHOWN HEREIN WAS PREPARED BY STANTEC CONSULTING SERVICES INC, UNDER DIRECT SUPERVISION OF MICHAEL J. LEMASA, WA. PLS 36802, FOR THE PURPOSE OF PARK IMPROVEMENTS DESIGN AND IS NOT INTENDED FOR USE BY ANY OTHER ENTITY FOR ANY OTHER PURPOSE. FIELD SURVEY WAS PERFORMED IN MARCH, 2019. UTILIZING A LEICA TS-15 SERIES ROBOTIC TOTAL STATION AND CARLSON SURVEYOR2/SURVE CE DATA COLLECTOR MAINTAINED IN ADJUSTMENT TO MANUFACTURERS SPECIFICATIONS.
2. SURVEY CONTROL:

   HORIZONTAL: NAD 83/2011 HORIZONTAL CONTROL WAS DERIVED VIA RTK-GPS UTILIZING WSRN REAL-TIME NETWORK SOLUTIONS LOCALIZED TO HOLD POSITION OF POSITION OF STANTEC CONTROL POINT 10001 E AS N=247407.537 E=11302094.100, A MAG NAIL SHOWN HEREIN AT BACK OF WALK NEAR SE CORNER OF PARK, AND A BASIS OF BEARINGS OF N 22°41'43" E TO STANTEC CONTROL POINT 10002, A MAG NAIL SHOWN HEREIN AT BACK OF WALK 10' NORTH OF CROSSWALK TO 7TH AVE S.

   VERTICAL: C.O.K. CONTROL POINT 60 (ELEVATION = 30.47) WAS HELD FOR ELEVATION AND TRANSFERRED TO PROJECT CONTROL POINTS VIA TRIG LEVELING, DATUM: NAVD '88 PER CITY CONTROL DATABASE.

   SITE BENCHMARK: STANTEC.CONTROL POINT 10002 SHOWN AND DESCRIBED HEREIN - ELEVATION = 30.29 NAVD '88
3. TOPOGRAPHIC FEATURES, ELEVATIONS, AND CONTOURS DERIVED VIA DIRECT GROUND SURVEY. CONTOUR INTERVAL IS 2 FEET MEETING OR EXCEEDING NATIONAL MAP ACCURACY STANDARDS (ONE-HALF CONTOUR INTERVAL AT 90% CONFIDENCE LEVEL).
4. RIGHT-OF-WAY AND PARCEL LINES DERIVED FROM BOUNDARY SURVEY. RECORD OF SURVEY TO BE RECORDED AT A LATER DATE.
5. UTILITY INFORMATION HEREIN COMPILED FROM RECORD INFORMATION, MEASUREMENTS MADE TO SURFACE-OBSERVED ABOVE-GRADE FEATURES, AND MEASUREMENTS MADE TO UTILITY LOCATOR MARKINGS SET BY APS, INC. IN MARCH OF 2019. UTILITY INFORMATION SHOWN IS APPROXIMATE AND FOR THE DEVELOPMENT OF DESIGN DRAWINGS ONLY AND SHALL NOT BE RELIED UPON FOR CONSTRUCTION. SURVEYOR MAKES NO WARRANTY AS TO THE COMPLETENESS OR ACCURACY OF EXISTING UTILITIES SHOWN ON THIS MAP.
6. THIS SURVEY WAS PERFORMED WITHOUT THE BENEFIT OF A CURRENT TITLE REPORT, AND MAY NOT SHOW ALL EASEMENTS AND ENCUMBRANCES OF RECORD.
7. ANCHOR QEA FIELD VERIFIED THE 19 PILES LOCATED ALONG THE BULKHEAD WALL AT THE SOUTH END ON 4/30/2020 AND THE EXISTING STAIRS AT THE NORTH END ON 6/13/2020.

   BASED ON FIELD VERIFICATION TOP OF STAIRS ELEVATION IS 29.12 FEET AND THE LANDING ELEVATION IS 27.50 FEET WITH THREE 6.5 INCH RISERS. THERE IS A LANDING AFTER THE THREE 6.5 INCH RISERS AND 6 6.5-INCH RISERS AFTER THE LANDING. THE MEASUREMENT FROM THE SIDEWALK TO THE FIRST RISER IS 99 INCHES. THE MEASUREMENT OF THE FIRST TREAD IS 12-3/4 INCH AND THE LANDING MEASUREMENT IS 83 INCHES.

NOTES:

1. HORIZONTAL DATUM: WASHINGTON STATE PLANE NORTH ZONE, NORTH AMERICAN DATUM OF 1983 (NAD83), U.S. SURVEY FEET
2. VERTICAL DATUM: NAVD 88
3. SURVEY PROVIDED BY STANTEC, INC IN MARCH 2019
4. SEE TOPOGRAPHIC SURVEY INFORMATION PARAGRAPH 7 FOR ANCHOR QEA ADDED ITEMS BASED ON 4/30/2020 AND 6/13/2020 FIELD VISITS

LEGEND

- APPROXIMATE OHWM
- APPROXIMATE OLWM
- CB CATCH BASIN
- SDMH STORM MANHOLE
- SDI STORM INVERT
- SSMH SANITARY MANHOLE
- PO POST (ALSO STATUE)
- WV WATER VALVE
- FH FIRE HYDRANT
- WM WATER METER
- GV GAS VALVE
- UP UTILITY POLE
- PO POST
- GB GARBAGE CONTAINER
- RS SIGN
- EDGE OF CONCRETE
- EDGE OF GRAVEL
- EDGE OF PAVEMENT
- FACE / BACK OF CURB
- X FENCE
- TOPOGRAPHY BREAKLINE
- SSU SANITARY SEWER
- SD STORMDRAIN
- G GAS LOCATES
- P POWER LOCATES
- W WATER LOCATES
- COM TELE-COMMUNICATION LOCATES
- ROCKERY
- HEDGE
- PWR POWER UTILITY BOX
- CV CONCRETE VAULT
- COM COMMUNICATION UTILITY BOX
- UB UTILITY BOX
- IC IRRIGATION CONTROL BOX
- TELE-COMMUNICATION PEDESTAL
- CROSS WALK CONTROL / LIGHT
- ROADWAY MONUMENT
- DS DECIDUOUS
- CF CONIFEROUS
- CW COTTONWOOD
- MP MAPLE
- PM PLUM
- PR POPLAR
- 26X1 SPOT ELEV
- BR BUSH
- SR SPRINKLER HEAD

ONE INCH — AT FULL SIZE, IF NOT ONE INCH SCALE ACCORDINGLY

PERMIT SET

ANCHOR QEA

CITY OF KIRKLAND WASHINGTON

123 Fifth Ave
Kirkland, WA 98033
(425) 587-3300

REVISIONS

REV	DATE	BY	APP'D	DESCRIPTION

DESIGNED BY: -
DRAWN BY: STANTEC
CHECKED BY: STANTEC
APPROVED BY: STANTEC
SCALE: AS SHOWN
DATE: MARCH 2019

DAVID E. BRINK PARK SHORELINE RENOVATION

EXISTING CONDITIONS PLAN - SOUTH

G-3.2

SHEET # 4 OF 37

K:\Projects\1006-City of Kirkland\David Brink Park Shoreline Renovation\Construction Plans\1006-PL-Existing.dwg G-3.1 EXISTING CONDITIONS PLAN

Sep 01, 2020 3:12pm cwee

Trees were tagged in November 2020. This graphic shows the corresponding tree tag number.

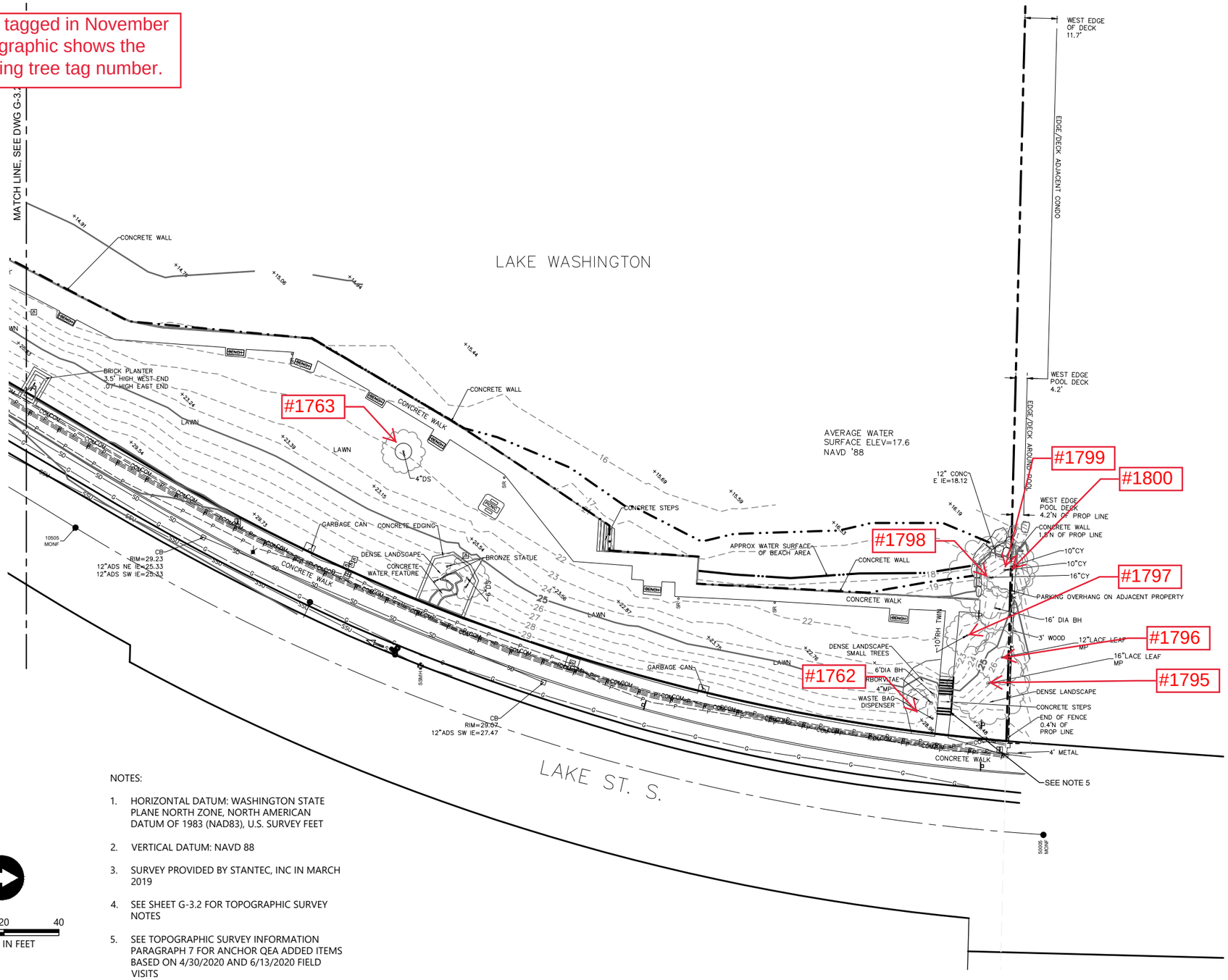

NOTES:

1. HORIZONTAL DATUM: WASHINGTON STATE PLANE NORTH ZONE, NORTH AMERICAN DATUM OF 1983 (NAD83), U.S. SURVEY FEET
2. VERTICAL DATUM: NAVD 88
3. SURVEY PROVIDED BY STANTEC, INC IN MARCH 2019
4. SEE SHEET G-3.2 FOR TOPOGRAPHIC SURVEY NOTES
5. SEE TOPOGRAPHIC SURVEY INFORMATION PARAGRAPH 7 FOR ANCHOR QEA ADDED ITEMS BASED ON 4/30/2020 AND 6/13/2020 FIELD VISITS

0 20 40
SCALE IN FEET

LEGEND

- APPROXIMATE OHWM
- APPROXIMATE OLWM
- CB CATCH BASIN
- SDMH STORM MANHOLE
- SDI STORM INVERT
- SSMH SANITARY MANHOLE
- PO POST (ALSO STATUE)
- WV WATER VALVE
- FH FIRE HYDRANT
- WM WATER METER
- GV GAS VALVE
- UP UTILITY POLE
- PO POST
- GB GARBAGE CONTAINER
- RS SIGN
- EDGE OF CONCRETE
- EDGE OF GRAVEL
- EDGE OF PAVEMENT
- FACE / BACK OF CURB
- X FENCE
- TOPOGRAPHY BREAKLINE
- SSU SANITARY SEWER
- SD STORMDRAIN
- G GAS LOCATES
- P POWER LOCATES
- W WATER LOCATES
- COM TELE-COMMUNICATION LOCATES
- ROCKERY
- HEDGE
- PWR POWER UTILITY BOX
- CV CONCRETE VAULT
- COM COMMUNICATION UTILITY BOX
- UB UTILITY BOX
- IC IRRIGATION CONTROL BOX
- TELE-COMMUNICATION PEDESTAL
- CROSS WALK CONTROL / LIGHT
- ROADWAY MONUMENT
- DS DECIDUOUS
- CF CONIFEROUS
- CW COTTONWOOD
- MP MAPLE
- PM PLUM
- PR POPLAR
- 26X1 SPOT ELEV
- BR BUSH
- SR SPRINKLER HEAD

ONE INCH
AT FULL SIZE, IF NOT ONE INCH SCALE ACCORDINGLY

PERMIT SET

K:\Projects\1006-City of Kirkland\David Brink Park Shoreline Renovation\Construction Plans\1006-PL-Existing.dwg G-3.3 EXISTING CONDITIONS PLAN

Sep 01, 2020 3:12pm cwee

ANCHOR QEA

CITY OF KIRKLAND WASHINGTON

123 Fifth Ave
Kirkland, WA 98033
(425) 587-3300

REVISIONS				
REV	DATE	BY	APP'D	DESCRIPTION

DESIGNED BY: -
DRAWN BY: STANTEC
CHECKED BY: STANTEC
APPROVED BY: STANTEC
SCALE: AS SHOWN
DATE: MARCH 2019

DAVID E. BRINK PARK SHORELINE RENOVATION

EXISTING CONDITIONS PLAN - NORTH

G-3.3

SHEET # 5 OF 37

APPENDIX I:
CULTURAL RESOURCE REPORT

City of Kirkland

CULTURAL RESOURCES REPORT COVER SHEET

Author: Bundy, Barbara E.

Title of Report: Cultural Resources Survey Report, David E. Brink Park Shoreline Renovation Project

Date of Report: April 2020

County(ies): King Section: 8 Township: 25 N Range: 5 E

Quad: Kirkland Acres: Approx. 0.8

PDF of report submitted (REQUIRED) ☒ Yes

Historic Property Export Files submitted? ☐ Yes ☒ No

Archaeological Site(s)/Isolate(s) Found or Amended? ☐ Yes ☒ No

TCP(s) found? ☐ Yes ☒ No

Replace a draft? ☐ Yes ☒ No

Satisfy a DAHP Archaeological Excavation Permit requirement? ☐ Yes # ☒ No

DAHP Archaeological Site #:
N/A
_____
_____
_____
_____
_____
_____
_____
_____

- Submission of paper copy is required.
- Please submit paper copies of reports ***unbound.***
- Submission of PDFs is required.
- Please be sure that any PDF submitted to DAHP has its cover sheet, figures, graphics, appendices, attachments, correspondence, etc., compiled into one single PDF file.
- Please check that the PDF displays correctly when opened.

April 2020
David E. Brink Park Shoreline Renovation Project

Cultural Resources Survey Report

Prepared for City of Kirkland Parks and Community Services and Public Works Departments

April 2020
David E. Brink Park Shoreline Renovation Project

Cultural Resources Survey Report

Prepared for
City of Kirkland Parks and Community Services and Public Works Departments
123 5th Avenue
Kirkland, Washington 98033-6189

Prepared by
Anchor QEA, LLC
1201 3rd Avenue, Suite 2600
Seattle, Washington 98101

Project Number: 191006-01.02

TABLE OF CONTENTS

1 Introduction 1

1.1 Project Description 1

1.2 Regulatory Context 3

1.3 Area of Potential Effects 3

2 Environmental and Cultural Context 5

2.1 Environmental Context 5

2.2 Cultural Context 7

2.3 Previous Research 9

3 Methods, Results, and Recommendations 11

3.1 Methods 11

3.2 Results 11

3.3 Recommendations 12

4 References 17

TABLES

Table 1 Shovel Probe Results 15

FIGURES

Figure 1 Project Vicinity 2

Figure 2 Recommended APE 4

Figure 3 1871 General Land Office Map 6

Figure 4 Moss Bay Shoreline Circa 1900 9

Figure 5 Test Locations 13

Figure 6 Cultural Materials from Shovel Probes 14

PHOTOGRAPHS

Photograph 1 Project Area Overview, Facing South 11

Photograph 2 SP-1 (at Right) and SP-2 (at Left) 16

ABBREVIATIONS

ADA	Americans with Disabilities Act
APE	Area of Potential Effects
bgs	below the ground surface
BP	before present
CFR	Code of Federal Regulations
City	City of Kirkland
cm	centimeter
NRHP	National Register of Historic Places
OHWM	ordinary high water mark
Park	David E. Brink Park
Project	David E. Brink Park Shoreline Renovation Project
SHPO	State Historic Preservation Officer
USACE	U.S. Army Corps of Engineers

1 Introduction

The City of Kirkland (City) is proposing to repair aging shoreline infrastructure and provide habitat enhancements as part of the David E. Brink Park Shoreline Renovation Project (Project). The Project is located at David E. Brink Park (Park) on Lake Washington at 555 Lake Street South in Kirkland, Washington (Figure 1).

The Project will require a permit from the U.S. Army Corps of Engineers (USACE) and must comply with Section 106 of the National Historic Preservation Act, its implementing regulations at 36 Code of Federal Regulations (CFR) 800, and USACE regulations at 33 CFR 325 Appendix C. Section 106 requires federal agencies to take into account the effects of their undertakings on historic properties. This report assists USACE in complying with requirements of Section 106.

1.1 Project Description

The Project is located at 555 Lake Street South in Kirkland, Washington (Section 8 of Township 25 North, Range 5 East). The Park sits along the shoreline of Moss Bay, Lake Washington.

The Project will address safety issues along the shoreline through a combination of repair, replacement, and removal of existing shoreline protection features. The Project will also enhance user experience by providing new access pathways that meet Americans with Disabilities Act (ADA) requirements. Proposed activities include the following:

- Removing and replacing a portion of the concrete bulkhead with a vinyl sheetpile wall with concrete cap at the north end and basalt rockery at the south end of the Park (ground disturbance of up to 5 feet below the ground surface [bgs])
- Removing and replacing the shoreline water access stairs south of the existing pier with a shorter stair feature (minimal/surficial ground disturbance)
- Replacing the existing pier timber decking with a new grated decking (no ground disturbance)
- Installing terraced rock walls, rock revetment, and vegetated areas behind the south end rockery with native low shoreline plantings (ground disturbance up to 4 feet bgs)
- Removing existing derelict pilings near the shoreline (no ground disturbance outside the footprint of the existing pilings)
- Creating two new pocket beaches with native shoreline plantings (ground disturbance up to 5 feet bgs)
- Placing habitat gravel waterward of the shoreline protection features and pocket beaches (no ground disturbance)
- Constructing ADA-compliant public access pathways (ground disturbance up to 1 foot bgs)

With the exception of the existing bulkheads and stairs, no structures will be modified or demolished as part of the Project.

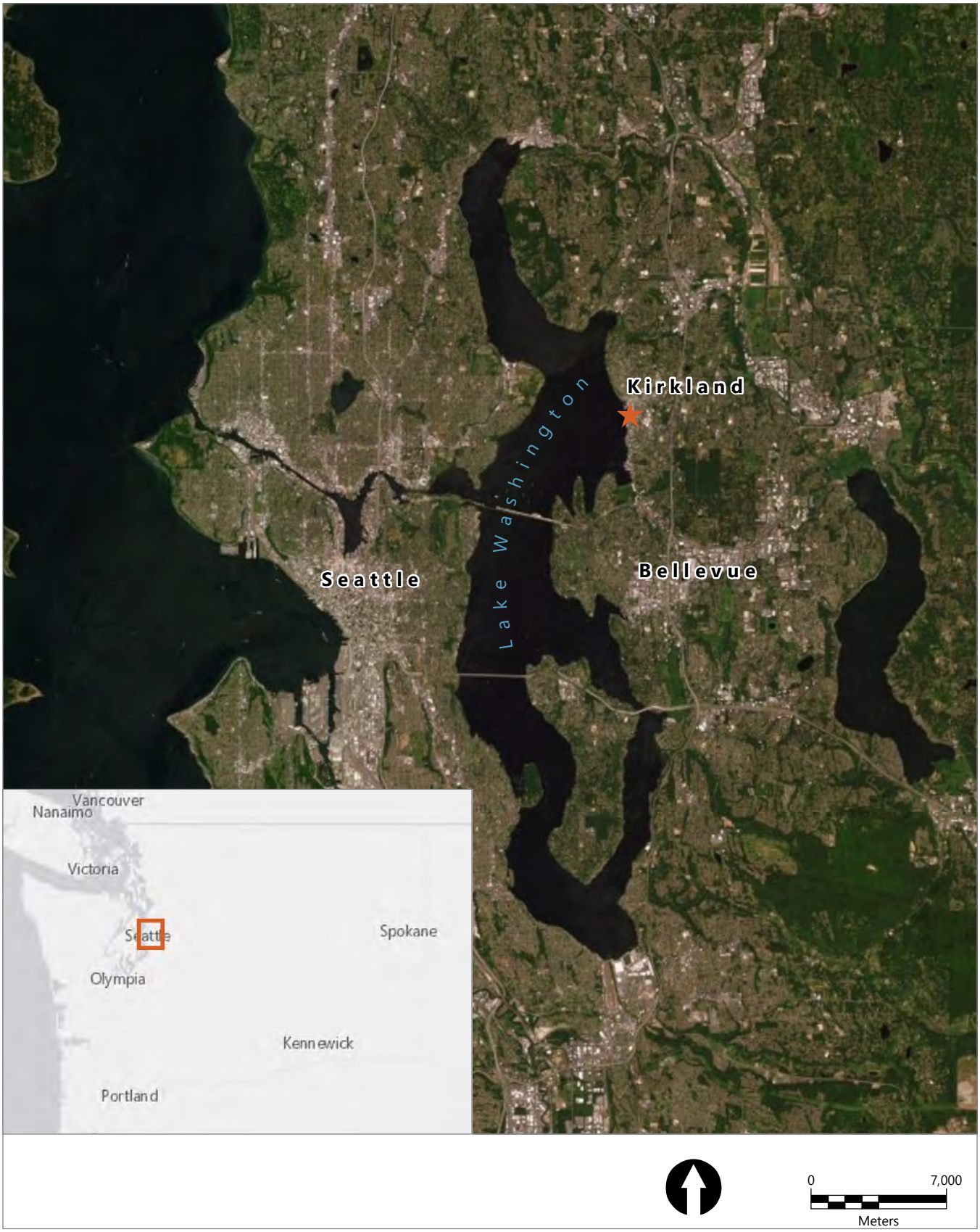

Publish Date: 2020/03/30, 10:22 AM | User: bbundy
Filepath: O:\Jobs\City_of_Kirkland_1006\Maps\David_Brink_Park_Cultural_Figures\DBPark_Cultural_Fig1_Vicinity.mxd

ANCHOR QEA

Figure 1
Project Vicinity
Cultural Resources Survey Report
David E. Brink Park Shoreline Renovation Project

1.2 Regulatory Context

Under Section 106, USACE is required to consider the effects of the permitted activity on historic properties. A historic property is "any prehistoric or historic district, site, building, structure, or object included in, or eligible for inclusion in, the National Register of Historic Places" (NRHP; 36 CFR 800.16[l][1]). Traditional Cultural Properties may also be historic properties. Under the Section 106 process, USACE must consult with interested and affected Indian Tribes and the State Historic Preservation Officer (SHPO) on potential impacts to cultural and historic resources.

To be eligible for inclusion in the NRHP, a historic property must have significance and retain integrity. Significance is defined as meeting one or more of the four NRHP criteria, and integrity is defined as a historic property's ability to convey its historic significance—in other words, its historic appearance and setting.

This report assists USACE with fulfilling the requirements of Section 106 and 36 CFR 800 by recommending the following:

- The Area of Potential Effects (APE)
- Whether there are NRHP-eligible historic properties in the APE
- Whether the undertaking will adversely affect any NRHP-eligible historic properties

1.3 Area of Potential Effects

The APE for a project is "the geographic area or areas within which an undertaking may directly or indirectly cause alterations in the character or use of historic properties" (36 CFR 800.16[d]). USACE will determine the APE for the Project. An APE includes areas where ground disturbance could affect archaeological sites, or modifications or demolition could affect historic structures.

No structures older than 50 years will be demolished or modified for the Project (aerial photographs and nautical charts indicate that the bulkheads and stairs were constructed sometime between 1976 and 1980; they are not 50 years old and are not potential historic properties). Ground disturbance will occur for the Project where new features are created through excavation: at the south and north bulkhead replacement and pocket beach creation areas; where planting will occur; and where new pathways will be installed. The recommended APE for the Project is shown in Figure 2.

Publish Date: 2020/03/30, 10:23 AM | User: bbundy
Filepath: O:\Jobs\City_of_Kirkland_1006\Maps\David_Brink_Park_Cultural_Figures\DBPark_Cultural_Fig2_APE.mxd

ANCHOR QEA

Figure 2
Recommended APE
Cultural Resources Survey Report
David E. Brink Park Shoreline Renovation Project

2 Environmental and Cultural Context

2.1 Environmental Context

The Project area is in the Puget Trough physiographic province, a valley system that extends from Puget Sound south through the Willamette Valley and that separates the Olympic Mountains from the Western Cascade Mountains (Franklin and Dyrness 1973). During the last glacial advance, the Vashon Stade of the Late Wisconsin glaciation, glaciers extended as far as Centralia, 85 miles south of Seattle. Glaciers began to recede about 15,000 years ago, leaving behind a rapidly changing landscape of proglacial lakes, meltwater streams, and other alluvial features. This process created the Vashon till, which is the thick layer of Pleistocene glacial outwash underlying Holocene sediments in the Project vicinity. As the glaciers retreated, land formerly depressed by the weight of the ice began to rebound, a process of uplift that lasted until approximately 9,000 years ago (Dragovich et al. 1994; Troost 2011).

As glaciers retreated, meltwater lakes—blocked from draining to the ocean by ice—formed over the Puget Sound area, submerging much of the area between the Olympic and Cascade Mountains (Troost 2011). The Project area at this time would have been under fresh water. About 14,900 years ago, the last glacial lake broke through its ice dam and drained; marine waters intruded, and Lake Washington was briefly part of Puget Sound because land was depressed below sea level by ice cover and had not yet rebounded. Water levels were much lower than modern lake levels because sea levels were relatively low (Troost 2011; Hodges 2010). The Project area would have been upland at this time. Shortly thereafter, what is now Lake Washington began to fill with fresh water as uplift continued and the connection with Puget Sound was cut off. Lake levels began to rise and continued to do so through the Late Holocene, when they reached historic levels recorded in the mid-1800s, fluctuating with seasonal weather patterns (Hodges 2010). The Project area would have been under an average of 2 to 9 feet of water in the Late Holocene, with a 5,500-year-old paleoshoreline mapped approximately 400 to 450 feet west of the modern shoreline. An 1884 General Land Office map shows the APE under water (Figure 3).

The Lake Washington watershed has been altered since the time of Euroamerican contact. In 1883, Euroamerican settlers trenched a log chute between Union Bay and nearby Portage Bay of Lake Union (Dorpat 1982). The chute was eventually widened into the Montlake Cut in 1916. When the cut was opened, Lake Washington abandoned its southern outlet and began draining into Lake Union. The lake level lowered about 8.9 feet (Hodges 2010). Lake levels since the Montlake Cut have been controlled by the Hiram M. Chittenden Ballard Locks, dampening seasonal fluctuations.

Publish Date: 2020/03/30, 10:20 AM | User: bbundy
Filepath: O:\Jobs\City_of_Kirkland_1006\Maps\David_Brink_Park_Cultural_Figures\DBPark_Cultural_Fig3_GLO.mxd

ANCHOR QEA

Figure 3
1871 General Land Office Map
Cultural Resources Survey Report
David E. Brink Park Shoreline Renovation Project

Native vegetation in the Puget Sound area consists of forests of the western hemlock (*Tsuga heterophylla*) zone, which is characterized by western hemlock, western red cedar, and Douglas fir, with a dense shrub and herbaceous understory including sword fern, salal, Oregon grape, ocean spray, blackberry, red huckleberry, and red elderberry (Franklin and Dyrness 1973). A variety of fauna would have been present in the Project vicinity prior to modern land modifications, including fish, invertebrates, waterfowl, and large and small mammals. The Project site is currently landscaped with a variety of native and non-native plants.

2.2 Cultural Context

The earliest evidence of prehistoric human occupation in western Washington may be the Manis mastodon site on the Olympic Peninsula near Sequim, which has been radiocarbon dated to about 12,000 before present (BP; Gustafson and Manis 1984). There are few other sites that date before about 5,000 BP. Numerous sites have been identified across the region dating to the period after 5,000 BP, when larger populations began to organize in more complex ways to exploit a wide range of resources, including salmon and shellfish, land mammals, and plant resources such as berries, roots, and bulbs (Matson and Coupland 1995). Over time, populations accumulated in large, semi-sedentary cedar plank house villages located at river mouths and confluences and on protected shorelines. The artifact tool kits became increasingly complex and specialized, allowing for large takes of resources, which were processed and stored for year-long consumption (Ames and Maschner 1999).

The Project area is in the traditional territory of the Duwamish, a Southern Coast Salish group speaking the Southern Lushootseed language, who lived in villages from Lake Washington to the Black River (Suttles and Lane 1990). In fact, early Euroamerican maps record the name "Duwamish Lake" for Lake Washington. More than 12,000 Lushootseed speakers occupied the Puget Sound region prior to European contact; however, epidemics introduced by the newcomers reduced this population to only 5,000 by the 1850s (Suttles and Lane 1990).

Southern Coast Salish villages were occupied part of the year, largely in winter, and residents made seasonal journeys to camps near resource gathering areas. Coastal villages relied on fish, which they caught with various weirs and traps, as well as shellfish and sea mammals (Suttles and Lane 1990; Ruby and Brown 1986). These food sources were supplemented by various berries, roots, and bulbs (Suttles and Lane 1990; Ruby and Brown 1986).

The ethnographer T.T. Waterman recorded one Lushootseed placename in the Project vicinity: number 102, *S-taLaL* for "the site of the town of Kirkland" (Hilbert et al. 2001:89). Waterman does not report any placenames in or near the Project area.

Captain George Vancouver's 1792 exploration of Puget Sound marked the first Euroamerican intrusion in the region (Kirk and Alexander 1990:271). However, Euroamerican settlement in the region was not established until 1832; the earliest instance was at Fort Nisqually at the southern end of Puget Sound. The Wilkes Expedition of 1841 used the fort as a base for explorations in southern Puget Sound (Kirk and Alexander 1990:308).

Lumber was Puget Sound's major export for much of its early history; in fact, Washington was the number one lumber-producing state in 1910, with 63% of the state's wage workers dependent upon the forest products industry for jobs (Schwantes 1996:215). Many of the mill towns in Puget Sound were established after the devastating San Francisco fires of 1852. Virgin timber stands and natural deepwater anchorages provided ships refuge from the Pacific storms. Soon, inlets up and down Puget Sound were exporting timber down the coast (Schwantes 1996:217). The timber industry declined in the early twentieth century, but the region's fortunes were revived by military industry during World War II.

Settlement on the east side of Lake Washington began around 1855 to 1860 in the vicinity of Yarrow Point in what is now Bellevue, south of the Project area (Harvey 1993). Due to the lack of "decent" roads, most homesteads were situated along the banks of Lake Washington and travel was commonly by water (Harvey 1993:3). Logging and milling operations were underway on the east side by the 1870s. The 1871 General Land Office map does not show any homesteads yet established in the Project vicinity (see Figure 3), but just 10 years later several families had cleared land for homesteads along the shoreline between Juanita Bay and Moss Bay (Stein 1998). In the early 1880s, the towns of Juanita and Houghton (now part of Kirkland) were founded, though the land between (where the Project area is located) "remained largely undeveloped" (Stein 1998:1).

Englishman Peter Kirk arrived in 1886. He partnered with local newspaper publisher Leigh S.J. Hunt to purchase land in the Houghton vicinity with the vision of creating a planned community centered around a steel mill and other industrial activity. Due to various market conditions, the venture failed, but later woolen mills and shipbuilding buoyed the city's economy (KHS 2012; Ely 1975). A ferry landing at Moss Bay north of the Project area provided easy access to Seattle and by the early 1900s, Kirkland was a bedroom community (Stein 1998).

The Project area appears to have been undeveloped in a photograph that is undated, but appears to be from the late 1800s or early 1900s, prior to construction of the car ferry dock in 1914 and construction of the Montlake Cut in 1916 (Figure 4). Several small docks were constructed over the years. A 1936 aerial photograph shows a small dock at the foot of 7th Avenue South, where the current pier is, with the rest of the Park forested. By 1964, that dock had been replaced by a different structure, and a new small dock and structure had been constructed about 200 feet north of the structure at the foot of 7th Avenue South. The remainder of the Park area still appears as vegetated, but possibly with some maintained open space. The current shoreline with bulkheads and lawns

appears in 1980; the 1968 dock is still in place but the small dock and structure to the north are gone. The 1968 dock was replaced with the current structure sometime between 1981 and 1990. A small cinder-block storage structure near the foot of the current dock appears to have been built at the same time.

Figure 4
Moss Bay Shoreline Circa 1900

Source: Kirkland Heritage Society

Overall, the Project area appears to have been under water in the late Holocene, then a lightly used waterfront area until development of the Park in the late 1970s to early 1980s.

2.3 Previous Research

There are no recorded archaeological sites within a mile of the Project area. Four sites are recorded within 2 miles, including an isolated find of a bottle (45KI969; 1.0 mile east of the Project area), a sunken World War II aircraft in Lake Washington (45KI402; 1.1 miles northwest of the Project area), an historic debris scatter (45KI748; 2.2 miles northeast of the Project area), and an historic homestead (45KI741; 2.9 miles northeast of the Project area). A mammoth or mastodon tusk, not apparently associated with human activity, was found at Lakeview Elementary School, about 0.4 mile southeast of the Project area (Liddle 2000).

No archaeological surveys have previously been conducted in the Project area. Three surveys that included subsurface testing have occurred within a mile of the Project area. The nearest cultural resources research was the archaeological monitoring that located the tusk at Lakeview Elementary (Liddle 2000). An investigation for a cell tower approximately 0.7 mile north of the Project area located no cultural materials (Finley 2014). A survey including subsurface testing was conducted about 0.8 mile southeast of the Project area; non-diagnostic historic items such as glass and nails were located (Peterson 2018).

The environmental and cultural context of the Project area, together with the results of previous research, indicate moderate potential for archaeological resources. Precontact archaeological materials are unlikely to be present given that the Project area was underwater in the late Holocene. Historic materials related to early to mid-twentieth century docks may be present.

3 Methods, Results, and Recommendations

3.1 Methods

The cultural resources survey plan included pedestrian reconnaissance of the entire APE and excavation of shovel probes where native sediments could be present and may be disturbed (primarily at the areas of bulkhead removal and pocket beach creation). Shovel probes were excavated by hand at 20-meter intervals, with a total of six shovel probes planned. Probes were excavated using industry-standard methods, and sediments were screened through 1/4-inch mesh. Because the initial shovel probes demonstrated minimal archaeological potential across the landform, only three of the six planned shovel probes were excavated. Photographs and field notes of the surveyed area were recorded.

3.2 Results

The pedestrian survey revealed maintained lawn and ornamental plants throughout the Project area. Surface visibility was minimal. Near the southern extent of the Project area, where the southern pocket beach will be constructed, a bulkhead has failed and sediments were visible. The Project area slopes fairly steeply from east to west (Photograph 1). No cultural materials or apparent anthropogenic surfaces were observed.

Photograph 1
Project Area Overview, Facing South

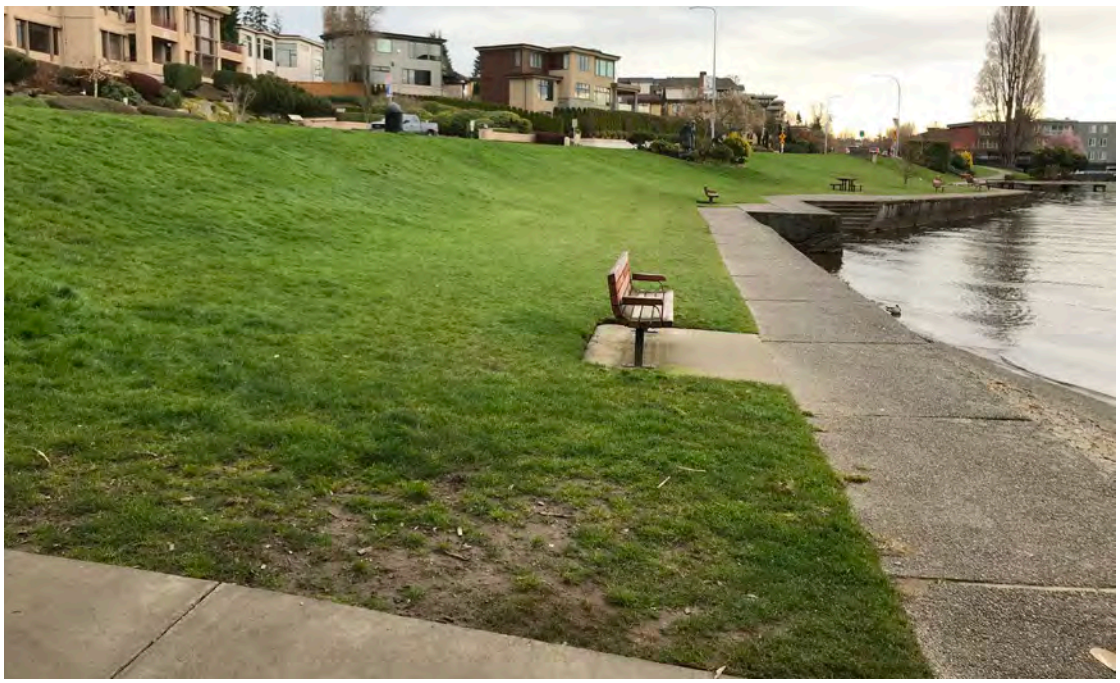

Three of the six planned shovel probes were excavated, numbered SP-1 to SP-3. Two were in the northern pocket beach/bulkhead removal area (SP-1 and SP-3), and one was in the southern pocket beach/bulkhead removal area (SP-2; Figure 5). Probes generally revealed topsoil and fill, above what appear to be native beach and lacustrine deposits. Probes were excavated as far as possible; SP-1 and SP-3 were terminated in wet beach deposits that collapsed into the probe, and SP-2 was terminated in wet sediments. Results are shown in Table 1, and SP-1 and SP-2 are shown in Photograph 2.

Cultural materials were found in all three shovel probes, almost exclusively modern materials. Figure 6 shows the items from each probe. The only potentially archaeological artifacts are three fragments of what appears to be jet or lignite with parallel striations on one side; two of the fragments refit and have a thin rim. The fragments appear to be from a small, fairly thin-walled vessel such as a small cup or a pipe bowl. They were found in the topsoil in SP-1. The topsoil was almost certainly imported from off site and the artifacts are out of context. The remaining materials are either modern or non-diagnostic to either the modern or historic period (such as green bottle glass).

All cultural materials were found within fill or topsoil. Deposits that appeared to be native sediments did not contain artifacts. It appears that the underlying gravel and fine silty sand above it could have been deposited by a post-5,500-year-old beach (because it is landward of the mapped 5,500-year-old shoreline), which was later submerged as the lake level continued to rise. Fine-grained materials then were deposited as the area became a deeper, lower energy environment.

3.3 Recommendations

No significant archaeological materials were encountered, and the potential for construction to encounter undisturbed archaeological materials is low. It is recommended that USACE determine that no historic properties will be affected by the Project.

Publish Date: 2020/03/30, 1:25 PM | User: bbundy
Filepath: O:\Jobs\City_of_Kirkland_1006\Maps\David_Brink_Park_Cultural_Figures\DBPark_Cultural_Fig5_TestLocations.mxd

ANCHOR QEA

Figure 5
Test Locations
Cultural Resources Survey Report
David E. Brink Park Shoreline Renovation Project

SP-1 Artifacts

SP-2 Artifacts

Closeup of Possible Jet/Lignite Artifacts from SP-1

SP-3 Artifacts

ANCHOR QEA

Figure 6
Cultural Materials from Shovel Probes

Cultural Resources Survey Report
David E. Brink Park Shoreline Renovation Project

Table 1
Shovel Probe Results

No.	Stratum (cm below surface)	Cultural Materials	Interpretation
SP-1	0-2 cm: roots and organics	none	O horizon
	2-19 cm: medium brown sandy silt with well-sorted medium sand	ceramic or jet fragments	topsoil
	19-26 cm: yellowish brown fine to medium sand with silt	none	fill
	26-58 cm: yellowish brown silt loam with poorly sorted sand and sparse small gravels	nail, bolt, unidentifiable metal fragments, plastic fragment, bottle glass fragment, brick or tile fragments, cigarette filter, foam fragments	fill
	58-84 cm: greyish brown fine sandy loam, no gravels, redox present	none	lacustrine deposit
	84-104 cm: very wet poorly sorted coarse sand and gravel	none	beach deposit
SP-2	0-3 cm: roots and organics	none	O horizon
	2-17 cm: medium brown sandy silt with well-sorted medium sand	wire, plastic fragments, ironstone fragment, unidentified metal fragment	topsoil
	17-50 cm: medium brown sandy loam with 60% to 70% rounded to subangular poorly sorted gravels; water flow at 42 cm	none	fill
	50-69 cm: yellowish brown sandy loam with rounded to subangular cobbles, redox present	none	fill
	69-79 cm: grey silty sand with rounded to subangular gravels and cobbles	none	beach deposit
SP-3	0-3 cm: roots and organics	none	O horizon
	3-20 cm: yellowish brown silt loam with poorly sorted sand and sparse small gravels	plastic-coated wood fragments, metal fragment	fill
	20-49 cm: greyish brown silty sand	none	lacustrine deposit
	49-73 cm: greyish brown fine sandy loam, no gravels, redox present	none	lacustrine deposit
	73-80 cm: very wet poorly sorted coarse sand and gravel	none	beach deposit

Photograph 2
SP-1 (at Right) and SP-2 (at Left)

4 References

Ames, K.M. and H.D.G. Maschner, 1999. *Peoples of the Northwest Coast: Their Archaeology and Prehistory*. London: Thames and Hudson Ltd.

Franklin, J.F., and C.T. Dyrness, 1973. *Natural Vegetation of Oregon and Washington*. USDA Forest Service, General Technical Report PNW-8.

Dorpat, P., 1982. "The Montlake Isthmus Before the Ship Canal. Seattle Then and Now." *Pacific Northwest Magazine*, August 8, 1982.

Dragovich, J.D., P.T. Pringle, and T.J. Walsh, 1994. "Extent and Geometry of the Mid-Holocene Osceola Mudflow in the Puget Lowland: Implications for Holocene Sedimentation and Paleogeography." *Washington Geology* 22(3):3-26.

Ely, Arline, 1975. *Our Foundering Fathers, The Story of Kirkland*. Kirkland, Washington: Kirkland Public Library.

Finley, Aimee, 2014. *Results of a Cultural Resources Inventory of the Sea Moss Bay Cell Site (Trileaf #610659), Kirkland, King County, Washington*. Report on file at the Department of Archaeology and Historic Preservation, Olympia, Washington.

Gustafson, C.E., and C. Manis, 1984. *The Manis Mastodon Site: An Adventure in Prehistory*. Manis Enterprises, Sequim, Washington.

Harvey, David W., 1993. *Historic Context Statement, Survey of Historic Structures for the City of Kirkland*. Report on file at the Department of Archaeology and Historic Preservation, Olympia, Washington.

Hilbert, Vi, Jay Miller, and Zalmai Zahir, 2001. *Puget Sound Geography*. Original Manuscript from T.T. Waterman, Edited with Additional Material from Vi Hilbert, Jay Miller, and Zalmai Zahir. Seattle, Washington: Lushootseed Press.

Hodges, Charles, 2010. *SR 520, I-5 to Medina: Bridge Replacement and HOV Project: Draft Geomorphic Investigations at Foster Island*. Report on file at the Washington State Department of Transportation, Seattle, Washington.

Kirk, R., and C. Alexander, 1990. *Exploring Washington's Past*. Seattle, Washington: University of Washington Press.

KHS (Kirkland Heritage Society), 2012. "Kirkland's Rich History." Accessed March 2020. Available at: http://kirklandheritage.org/history/kirkland-history#.

Liddle, Janet A., 2000. *Letter to Rob Whitlam Regarding Mastodon or Mammoth Tusk Discovered at Lakeview Elementary School In Kirkland*. Report on file at the Department of Archaeology and Historic Preservation, Olympia, Washington.

Matson, R.G., and G. Coupland, 1995. *The Prehistory of the Northwest Coast*. London: Academic Press.

Peterson, Emily, 2018. *Cultural Resources Assessment of the Lakeview Drive Office Project, Kirkland, Washington*. Report on file at the Department of Archaeology and Historic Preservation, Olympia, Washington.

Ruby, R.H., and J.A. Brown, 1986. *A Guide to the Indian Tribes of the Pacific Northwest*. Norman, Oklahoma: University of Oklahoma Press.

Schwantes, C.A., 1996. *The Pacific Northwest: An Interpretive History*. Lincoln, Nebraska, and London: University of Nebraska Press. .

Stein, Alan, 1998. "Kirkland: thumbnail history." HistoryLink.org essay 208. Accessed March 2020. Available at: https://www.historylink.org/File/208.

Suttles, W., and B. Lane, 1990. "Southern Coast Salish." In *Northwest Coast, Handbook of North American Indians, Vol. 7.* Editor, W. Suttles. Washington, DC: Smithsonian Institution; pp. 485-502.

Troost, K.G., 2011. *SR 520, I-5 to Medina: Bridge Replacement and HOV Project: Geomorphology and Shoreline History of Lake Washington, Union Bay, and Portage Bay Technical Memorandum*. Report on file at the Washington State Department of Transportation, Seattle, Washington.