City of Kirkland

GENERAL SEWER PLAN

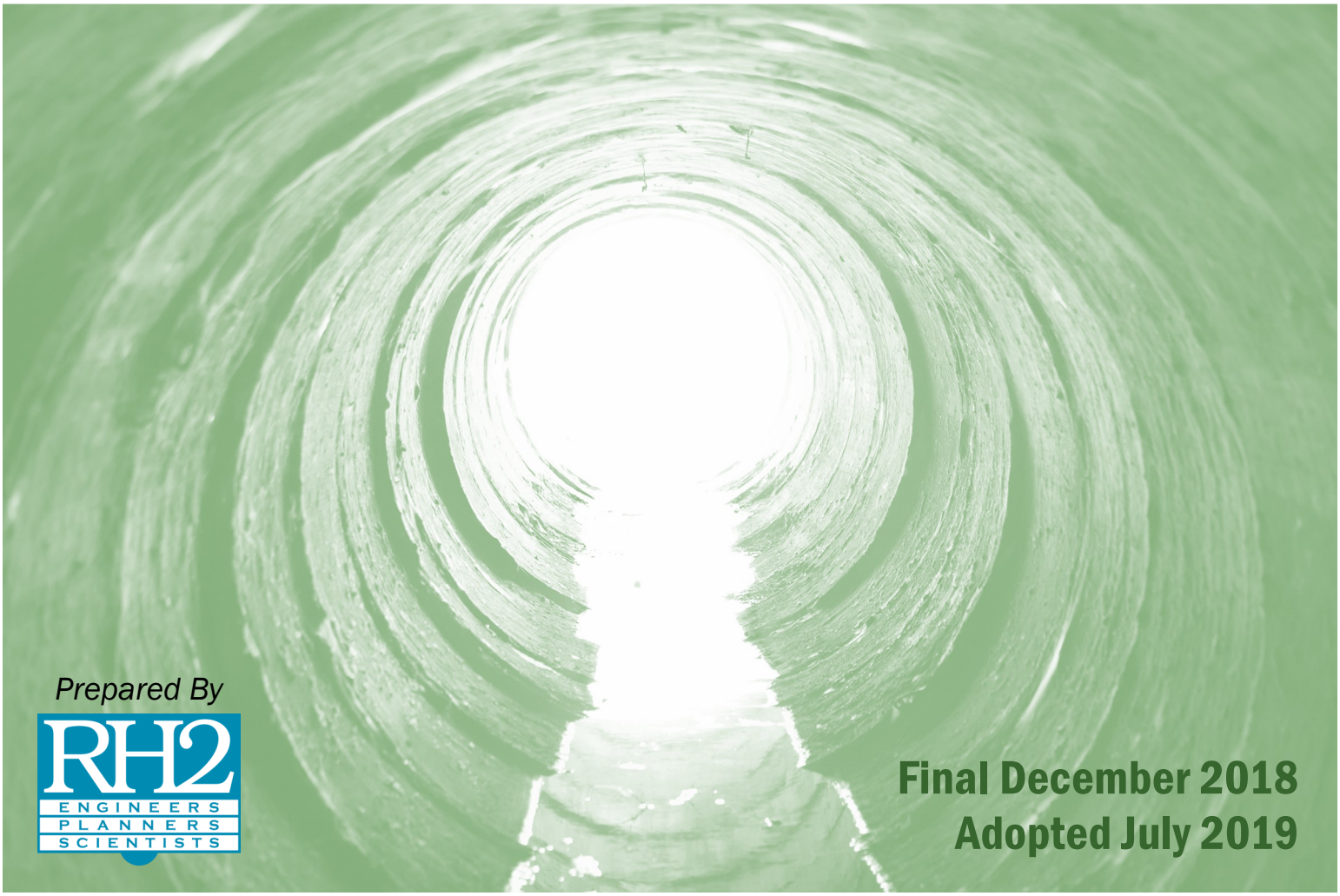

Prepared By

RH2 ENGINEERS PLANNERS SCIENTISTS

Final December 2018
Adopted July 2019

THIS PAGE INTENTIONALLY LEFT BLANK

City of Kirkland General Sewer Plan

Final December 2018

Adopted July 2019

Mayor
Penny Sweet

Deputy Mayor
Jay Arnold

City Council
Tom Neir
Toby Nixon
Kelli Curtis
Dave Asher
Jon Pascal

Public Works Director
Kathy Brown

Prepared by:

City of Kirkland
123 Fifth Avenue
Kirkland, WA 98033
Contact: Erin Devoto
Phone: 425-587-3900

RH2 Engineering, Inc.
22722 29th Drive SE, Suite 210
Bothell, WA 98021
Contact: Kenny Gomez, P.E.
(425) 951-5416

THIS PAGE INTENTIONALLY LEFT BLANK

Certification

This General Sewer Plan for the City of Kirkland was prepared under the direction of the following registered professional engineers.

KENNY F. GOMEZ
STATE OF WASHINGTON
50500
REGISTERED
PROFESSIONAL ENGINEER

Kenny Gomez, P.E.

Signed:
8/14/2017

JOHN D. HENDRON
STATE OF WASHINGTON
26934
REGISTERED
PROFESSIONAL ENGINEER

John Hendron, P.E.

Signed:
8/14/2017

RICHARD L. BALLARD
STATE OF WASHINGTON
32878
REGISTERED
PROFESSIONAL ENGINEER

Richard L. Ballard, P.E.

Signed:
8/14/2017

THIS PAGE INTENTIONALLY LEFT BLANK

City of Kirkland
General Sewer Plan
Table of Contents

EXECUTIVE SUMMARY

PURPOSE OF THE PLAN ES-1
SUMMARY OF KEY ELEMENTS ES-1
Sewer Service Area ES-1
Existing Facilities ES-3
Existing Wastewater Characteristics and Flows ES-4
Peaking Factors ES-5
Inflow and Infiltration ES-6
Existing and Projected Wastewater Flow Rates ES-7
Summary of Improvements ES-8
Operation and Maintenance ES-10
Financial Summary ES-10

CHAPTER 1 – INTRODUCTION

SEWER SYSTEM OWNERSHIP AND MANAGEMENT 1-1
OVERVIEW OF EXISTING SYSTEM 1-1
AUTHORIZATION AND PURPOSE 1-2
SUMMARY OF PLAN CONTENTS 1-2
DEFINITION OF TERMS 1-3
LIST OF ABBREVIATIONS 1-3

CHAPTER 2 – SEWER SYSTEM DESCRIPTION

INTRODUCTION 2-1
SEWER SERVICE AREA 2-1
History 2-1
Geology and Topography 2-2
Climate 2-2
EXISTING SEWER FACILITIES 2-2
Sewer Drainage Basins 2-2
Collection Piping 2-3
Lift Stations 2-4
Wastewater Treatment and Disposal Facilities 2-7
Telemetry and Supervisory Control 2-8
Industrial Wastewater Facilities/Characterization 2-8
Projects Completed Since the 2010 GSP 2-9
ADJACENT SEWER SYSTEMS 2-9
City of Bellevue 2-9
City of Redmond 2-10
Northshore Utility District 2-10
Woodinville Water District 2-10
King County 2-10
CITY OF KIRKLAND WATER SYSTEM 2-11
City of Kirkland 2-11
Introduction 2-11
Water Treatment 2-12
Water System Interties 2-13

CHAPTER 3 – LAND USE AND POPULATION

INTRODUCTION 3-1
COMPATIBILITY WITH OTHER PLANS 3-1
Introduction 3-1
Growth Management Act 3-1
City of Kirkland Comprehensive Plan 3-2
King County Comprehensive Plan 3-3

King County Countywide Planning Policies 3-3
King County Regional Wastewater Services Plan 3-3
City of Bellevue Wastewater System Plan....3-4
City of Redmond General Sewer Plan 3-4
Northshore Utility District Wastewater Comprehensive Plan....3-4
LAND USE....3-4
POPULATION....3-5
Household Trends 3-5
Existing and Future Population....3-6

CHAPTER 4 – FLOW ANALYSIS

INTRODUCTION 4-1
EXISTING AND PROJECTED SEWER SERVICE POPULATION....4-1
King County Wastewater Treatment Division Flow Forecasts 4-1
City of Kirkland Sewer Service Population 4-2
EXISTING WASTEWATER FLOW RATES....4-2
PEAKING FACTORS....4-5
INFLOW AND INFILTRATION....4-7
PROJECTED WASTEWATER FLOW RATES 4-10
PROJECTED FLOW RATES WITH WATER USE EFFICIENCY 4-13
SUMMARY 4-14

CHAPTER 5 – POLICIES AND DESIGN CRITERIA

INTRODUCTION 5-1
REGULATIONS....5-2
National Pollutant Discharge Elimination System Permit 5-2
CUSTOMER SERVICE POLICIES....5-2
Sewer Service and Connection 5-2
Septic Systems....5-3
COLLECTION SYSTEM POLICIES AND DESIGN CRITERIA 5-3
Sanitary Sewer Design Criteria....5-3
Gravity Sewer Design Criteria 5-4
Separation between Sanitary Sewer and Other Utilities 5-4
Design Period 5-4
Force Main Design Criteria....5-4
Side Sewer Design Criteria 5-5
LIFT STATION POLICIES AND DESIGN CRITERIA....5-5
OPERATIONAL POLICIES....5-5
Maintenance 5-5
Temporary and Emergency Services 5-6
Reliability 5-6
ORGANIZATIONAL POLICIES....5-6
Staffing....5-6
FINANCIAL POLICIES....5-7
General....5-7
Connection Charges 5-8

CHAPTER 6 – WASTEWATER COLLECTION EVALUATION

INTRODUCTION 6-1
SEWER MODEL BACKGROUND....6-1
Hydraulic Model....6-1
Hydraulic Analyses Results....6-2
COLLECTION SYSTEM AND LIFT STATION ANALYSES....6-3
Gravity Collection System Pipe Capacity Analysis and Deficiencies....6-3

Other Existing Gravity Collection System Deficiencies 6-5
Inflow and Infiltration Analysis and Deficiencies 6-5
Lift Station Capacity Analysis and Deficiencies 6-5
Other Existing Lift Station Facility Deficiencies 6-6

CHAPTER 7 – CAPITAL IMPROVEMENT PLAN

INTRODUCTION 7-1
DESCRIPTION OF IMPROVEMENTS 7-1
Existing System Improvements 7-2
2021 System Improvements 7-10
2035 System Improvements 7-11
ESTIMATING COSTS OF IMPROVEMENTS 7-12
PRIORITIZING IMPROVEMENTS 7-12
Sewer Main Improvements 7-12
Facility and Miscellaneous Improvements 7-15
Developer-funded Improvements 7-15
SCHEDULE OF IMPROVEMENTS 7-16
Future Project Cost Adjustments 7-16

CHAPTER 8 – OPERATIONS AND MAINTENANCE

INTRODUCTION 8-1
NORMAL OPERATIONS 8-1
City Personnel 8-1
Personnel Responsibilities 8-2
Staff Certification 8-3
Available Equipment 8-3
Service, Equipment, and Supply Vendors 8-4
Routine Operations 8-6
Continuity of Service 8-6
Operations and Maintenance Records 8-6
Safety Procedures and Equipment 8-6
EMERGENCY OPERATIONS 8-8
Capabilities 8-8
PREVENTIVE MAINTENANCE 8-8
Sewer Collection System 8-9
Sewage Lift Stations 8-9
Engine Generator Sets 8-9
Telemetry and Control System 8-9
Tools and Equipment 8-10
STAFFING 8-10
Current Staff 8-10
Staffing Requirements 8-10

CHAPTER 9 – FINANCIAL PLAN

INTRODUCTION 9-1
PAST FINANCIAL PERFORMANCE 9-1
Comparative Financial Statements 9-1
Existing Long-term Debt 9-4
FUNDING SOURCES 9-5
Government Programs 9-6
Public Debt 9-6
City Cash Reserves 9-7
Capital Facilities Charges 9-7
CAPITAL FINANCING PLAN 9-9

PROJECTED FINANCIAL PERFORMANCE....9-10
Basis for Revenue Requirements.... 9-10
RATE STRUCTURE....9-12
Existing Retail Rates.... 9-12
CONCLUSION....9-12

TABLES

Table ES-1 2014 Sewer System Summary....ES-2
Table ES-2 Sewer Piping Inventory....ES-3
Table ES-3 Lift Station Characteristics....ES-4
Table ES-4 Historical AAFs at the City's Lift Stations....ES-4
Table ES-5 City's Historical Wastewater Flows....ES-5
Table ES-6 Peaking Factors for the City's Sewer Drainage Basins....ES-6
Table ES-7 Existing 20-year Peak Hour I/I Flow Rates....ES-7
Table ES-8 Projected Sewer Drainage Basin Domestic AAF and Total PHF Rates....ES-7
Table ES-9 Projected Lift Station Domestic AAF and Total PHF Rates....ES-8
Table ES-10 Proposed Improvements Implementation Schedule....ES-9
Table ES-11 Staffing Recommendation.... ES-10
Table 1-1 2014 Sewer System Summary....1-2
Table 1-2 Abbreviations....1-4
Table 2-1 Sewer Piping Inventory....2-4
Table 2-2 Lift Station Characteristics....2-5
Table 2-3 Collection System Improvement Projects Completed Since 2010 GSP....2-9
Table 2-4 Booster Pump Station Facilities Summary....2-12
Table 2-5 Storage Facilities Summary....2-12
Table 3-1 Land Use Designations....3-5
Table 3-2 Population Trends within City Limits....3-6
Table 3-3 Population Projections....3-7
Table 4-1 City's Historical Wastewater Flows....4-4
Table 4-2 Historical AAFs at the City's Lift Stations....4-5
Table 4-3 Historical MDFs at the City's Lift Stations....4-5
Table 4-4 Summary of MDF Peaking Factors at the City's Lift Stations....4-6
Table 4-5 Peaking Factors for the City's Sewer Drainage Basins....4-7
Table 4-6 Existing 20-year Peak Hour I/I Flow Rates....4-8
Table 4-7 Maximum Day I/I per Sewered Area Quotients for the City's Lift Stations....4-10
Table 4-8 Projected Sewer Drainage Basin Domestic AAF and Total PHF Rates....4-11
Table 4-9 Projected Lift Station Domestic AAF and Total PHF Rates....4-12
Table 4-10 Projected Sewer System Domestic AAF and Total PHF Rates....4-13
Table 4-11 Population and Flow Analysis Summary....4-14
Table 7-1 Sewer Main Improvements Priority Ranking Criteria....7-14
Table 7-2 Proposed Improvements Implementation Schedule....7-17
Table 7-3 Annual Sanitary Pipeline Replacement Program Sorted by Priority Ranking....7-28
Table 8-1 Staff Certification....8-3
Table 8-2 Wastewater Division Equipment List....8-4
Table 8-3 Service, Equipment, and Supply Vendors List....8-5
Table 8-4 Staffing Recommendation....8-11
Table 9-1 Statement of Revenues, Expenses, and Changes in Fund Net Position....9-2
Table 9-2 Statement of Net Position....9-3
Table 9-3 Schedule of Long-term Debt (Sewer Share)....9-5
Table 9-4 Cash Balance Summary for Sewer Utility....9-7
Table 9-5 Capital Facilities Charges....9-9
Table 9-6 6-year Capital Financing Plan 2016-2021 (Inflated $)....9-10
Table 9-7 Revenue Requirement Forecast....9-11

CHARTS

Chart 8-1 Organization Chart

FIGURES

Figure 2-1 Sewer Service Area
Figure 2-2 Existing Sewer System
Figure 2-3A Existing Sewer Main Age
Figure 2-3B Existing Sewer Main Material
Figure 2-4 Minor Sewer Drainage Basins
Figure 2-5 Major Sewer Drainage Basins Schematic
Figure 2-6 Existing Water and Sewer Systems
Figure 3-1 Land Use
Figure 3-2 Traffic Analysis Zones
Figure 4-1 20-year Storm Peak Hour I/I Flow Rates
Figure 6-1 Video Inspection Observations
Figure 6-2 2010 through 2015 Sewer O&M Costs
Figure 7-1 Existing Sewer Deficiencies
Figure 7-2 Projected 2021 Sewer Deficiencies
Figure 7-3 Projected 2035 Sewer Deficiencies
Figure 7-4 Existing CIP Priority Score

APPENDICES

Appendix A – King County South WWTP NPDES Permit
Appendix B – Service Agreements
Appendix C – SEPA Checklist
Appendix D – Septic Property Count – September 2015
Appendix E – Lift Station Flow Data, Domestic Wastewater Flow Projections, and Inflow and Infiltration Analysis Data
Appendix F – Sanitary Sewer Pre-Approved Notes, Design Criteria, and Plan
Appendix G – SewerCAD Results
Appendix H – List of Known Industrial Wastewater Producers and Authorization Letters and Permits
Appendix I – List of Potential Reclaimed Water Users
Appendix J – Public Agency Review Correspondence
Appendix K – Public Review and City Adoption

THIS PAGE INTENTIONALLY LEFT BLANK

Executive Summary

PURPOSE OF THE PLAN

The City of Kirkland's (City) sewer system is a major infrastructure, most of which is invisible to the customers it serves. The sewer system requires qualified staff to operate and maintain an ongoing capital improvement program to replace old components to meet the requirements mandated by federal and state laws. The primary purpose of the City's General Sewer Plan (GSP) is to identify and schedule sewer system improvements that correct existing deficiencies, afford sufficient hydraulic capacity, and ensure a safe and reliable sewer system for current and future customers.

SUMMARY OF KEY ELEMENTS

Sewer Service Area

The City's sewer service area is located within the City limits and bordered on the west by Lake Washington, on the east by the City of Redmond, on the north by Northshore Utility District (Northshore), and on the south by the City of Bellevue. The sewer utility serves the southern portion of the City, while Northshore generally provides service to the part of the City that is north of NE 116th Street. The City's existing sewer service area encompasses approximately 5,630 acres (8.8 square miles).

At the time this GSP was being drafted, the City and Northshore were working on a mutual agreement to have Northshore assume ownership of the NE 124th Street sewer drainage basin. This agreement was completed in 2017. For the purposes of this GSP, the NE 124th Street sewer drainage basin was included in the City's sewer service area for all historical data and projections. However, the wastewater flow projections for this sewer drainage basin are not shown separated from the other sewer drainage basins in this GSP. In addition, the wastewater collection system for this sewer drainage basin, except for **Figure 2-4**, and the proposed wastewater collection system improvements for this sewer drainage basin are not shown in this GSP since this area is now maintained and operated by Northshore.

Approximately 64 percent of the land area within the City's sewer service area is currently designated for single-family residential use (or low density residential); approximately 10 percent is designated for multi-family residential use (or medium/high density residential); approximately 11 percent is designated for park or open space use; approximately 7 percent is designated for commercial use; approximately 5 percent is designated for office commercial use; approximately 2 percent is designated for industrial use; approximately 1 percent is designated for institutional use; and less than 1 percent is designated for transit oriented development.

In 2014, there were approximately 10,433 sewer service connections throughout the City's sewer system. Of these connections, 9,825 were residential services and 608 were commercial.

The City's 2014 sewer system population was estimated to be 29,481 and is expected to grow to 38,981 by 2035, which is an average annual growth rate of 1.3 percent. The City's population is expected to grow from 82,590 in 2014 to 95,913 by 2035, which is an average annual growth rate of 0.7 percent.

The City's sewer system is made up of 6 pump stations, approximately 122 linear miles of gravity sewer piping, and approximately 6,230 linear feet (LF) of force main. In general, the City's sanitary

sewer system conveys wastewater to King County's (County) Eastside Interceptor that passes through the City's wastewater service boundary. The interceptor transports collected flows south to the County's wastewater treatment plant located in Renton, Washington. A summary of the sewer system characteristics is provided in **Table ES-1**.

Table ES-1
2014 Sewer System Summary

Description	Data
City Population	82,590
Sewer Service Area Population	29,481
Sewer Service Area Employees	30,124
Number of Parcels on Septic System (In City's Wastewater Service Area)	785
Wastewater Service Area (acres)	5,630
Total Connections	10,433
Residential Domestic AAF per Capita (gpcd)	63
Commercial Domestic AAF per Employee (gped)	18
Domestic AAF per ERU (gpd per ERU)	136
Total Domestic AAF (MGD)	2.41
Number of Sewer Drainage Basins	13
Number of Pump Stations and Total Firm Capacity	6 (2,217 gpm)
Total Length of Gravity Sewer Main (miles)	~ 121.9
Total Length of Force Main (miles)	~ 1.2

The City's existing sewer service area is comprised of 13 major drainage basins. Approximately 123 linear miles of sewer piping ranging in size from 6 to 36 inches serves the sewer system customers. As shown in **Table ES-2**, most of the sewer pipe (approximately 79 percent) within the sewer service area is 8-inch-diameter pipe.

Table ES-2
Sewer Piping Inventory

Gravity Main

Diameter (inches)	Length (feet)	Length (miles)	% of Total
6	63,221	12.0	9.8%
8	505,801	95.8	78.6%
10	15,307	2.9	2.4%
12	27,031	5.1	4.2%
15	11,186	2.1	1.7%
16	28	0.01	0.004%
18	8,605	1.6	1.3%
20	1,344	0.3	0.2%
21	8,785	1.7	1.4%
24	1,797	0.3	0.3%
36	306	0.1	0.05%
Total	**643,411**	**121.9**	**100%**

Force Main

Diameter (inches)	Length (feet)	Length (miles)	% of Total
4	3,235	0.6	52%
6	2,220	0.4	36%
8	776	0.15	12%
Total	**6,231**	**1.2**	**100%**

Collection System

Diameter (inches)	Length (feet)	Length (miles)	% of Total
Combined Total	649,642	123.0	100%

Existing Facilities

The City currently owns and maintains six wastewater lift stations. The characteristics of each lift station are presented in **Table ES-3**.

Table ES-3
Lift Station Characteristics

Lift Station Name	Force Main Diameter (in)	Total Dynamic Head (TDH) (ft)	Design Capacity (gpm)*	Drawdown Test Capacity (gpm)	Firm Capacity (gpm)
Rose Point	6	66	250	300	300
South Bay	4	190	150	180	180
Yarrow Bay II	4	46	125	71	71
Waverly Park	6	104	320	282	282
Trend	4	25	120	176	176
Lake Plaza	8	45	750	750	1,300

*gpm = gallons per minute

Existing Wastewater Characteristics and Flows

The 2008 through 2014 total average annual flow (AAF) rates for the City's lift stations are shown in **Table ES-4**. **Table ES-5** provides the total domestic AAF rates in the City's sewer system for 2012 through 2014.

Table ES-4
Historical AAFs at the City's Lift Stations

	Historical AAF (gpd)*							
	Year							Average (2008 - 2014)
Lift Station	2008	2009	2010	2011	2012	2013	2014	
Lake Plaza	243,000	283,500	270,000	216,000	256,500	243,000	229,500	248,786
Rose Point	14,400	14,400	21,600	10,800	14,400	18,000	21,600	16,457
South Bay	4,320	8,640	4,320	4,320	4,320	4,320	4,320	4,937
Trend	5,280	8,448	8,448	6,336	6,336	8,448	8,544	7,406
Waverly Park	20,304	33,840	27,072	27,072	30,456	27,072	37,224	29,006
Yarrow Bay II	4,260	5,112	5,112	4,260	4,686	4,260	4,260	4,564

*gpd = gallons per day

Table ES-5
City's Historical Wastewater Flows

Description	Year 2012	Year 2013	Year 2014	Average (2012 - 2014)
Single-family Accounts				
Sewer Accounts (ERUs)	9,002	9,075	9,206	9,094
Sewer Population	19,354	19,511	19,793	19,553
Domestic AAF (gpd)	1,349,912	1,223,743	1,255,936	1,276,530
Multi-family Accounts				
Sewer Accounts	624	621	619	621
Sewer ERUs	3,910	4,301	4,506	4,239
Sewer Population[1]	8,407	9,248	9,689	9,115
Domestic AAF (gpd)	586,398	580,009	614,773	593,727
Total of Residential Accounts				
Domestic AAF (gpd)	1,936,309	1,803,752	1,870,709	1,870,257
Sewer Accounts	9,626	9,696	9,825	9,716
Sewer ERUs	12,912	13,376	13,712	13,334
Sewer Population[1]	27,762	28,759	29,481	28,667
Domestic AAF per ERU (gpd per ERU)	150	135	136	140
Domestic AAF per Capita (gpcd)	70	63	63	65
Commercial Accounts				
Domestic AAF (gpd)	497,168	474,588	541,418	504,392
Sewer Accounts	611	612	608	610
Sewer ERUs	3,315	3,519	3,969	3,601
Employees[2]	30,124	37,981	30,124	32,743
Domestic AAF per Employee (gped)[3]	17	---	18	17
Total				
Domestic AAF (gpd)	2,433,477	2,278,341	2,412,128	2,374,648
Sewer Accounts	10,237	10,308	10,433	10,326
Sewer ERUs	16,228	16,896	17,681	16,935
Domestic AAF per ERU (gpd per ERU)	150	135	136	140

NOTES:
1. Existing multi-family residential population in the sewer service area is estimated based on average single-family residential winter water consumption per connection and total multi-family residential winter water consumption.
2. No data is available for the number of employees in the City's sewer service area in 2013 or 2014. The number of employees in 2013 are the employees in the City limits, which include the annexation areas that are not in the City's sewer service area. The number of employees in 2014 are assumed to be the same as 2012 since there was a slight decrease in the number of commercial accounts.
3. Domestic AAF per employee was not determined for 2013 because accurate information is not available for the number of employees in the City's sewer service area for 2013.

Peaking Factors

Projected flows are used to further analyze how well the existing sewer system will perform in the future and determine improvements required to maintain or improve system function. In order to establish projected flow scenarios for a sewer system, peaking factors need to be determined for the existing system, which can then be applied to projected future flow rates. **Table ES-6** presents the domestic AAF rates and the estimated peak hour flow (PHF) factor for each sewer drainage basin,

which were then used to estimate existing and projected future domestic wastewater PHFs generated by the City's sewer customers.

Table ES-6
Peaking Factors for the City's Sewer Drainage Basins

Basin Name	Domestic AAF (gpd)	Domestic PHF Peaking Factor (PHF/AAF)
116th Avenue NE	9,880	4.19
Eastside Interceptor	1,215,100	2.67
Juanita	214,000	3.40
Juanita Bay	23,270	4.04
Kirkland	550,295	3.02
Lake Plaza	160,015	3.51
Rose Point	18,245	4.09
South Bay	4,290	4.29
Trend	6,190	4.25
Watershed Park	6,450	4.24
Waverly Park	13,145	4.14
Yarrow Bay	171,790	3.48
Yarrow Bay II	3,830	4.30

NOTE:
-Flows shown in this table are rounded off and approximate.

Inflow and Infiltration

The analyses presented in this GSP include peak hour inflow and infiltration (I/I) flow rates consistent with the County's Regional Infiltration and Inflow Control Program. The County estimated peak hour I/I flow rates throughout the King County Department of Natural Resources and Parks, Wastewater Treatment Division's (KCWTD) regional wastewater system as part of the 2009 through 2011 Decennial Flow Monitoring. The County estimated peak hour I/I flow rates in the City's sewer service area to range from 1,396 to 9,218 gallons per acre per day (gpad), which are relatively high I/I flow rates. The areas with the highest peak hour I/I flow rates include the downtown area and sections of the City's sewer service area adjacent to Lake Washington and Yarrow Bay; the areas with the lowest peak hour I/I flow rates include the eastern and northern regions of the City's sewer system.

Total peak hour I/I flow for each of the City's existing sewer drainage basins was based on the County's estimated peak hour I/I flow rates and the sewered area in each of the City's sewer drainage basins. The existing peak hour I/I flow rate per acre and total peak hour I/I flow rate for each of the City's existing sewer drainage basins for a 20-year storm peak hour event are shown in **Table ES-7**.

Table ES-7
Existing 20-year Peak Hour I/I Flow Rates

Basin Name	Peak Hour I/I per Acre (gpad)	Sewered Basin Area (acres)	Total Peak Hour Basin I/I (gpd)
116th Avenue NE	3,875	34	130,474
Eastside Interceptor	4,894	2,125	10,401,916
Juanita	4,938	538	2,654,827
Juanita Bay	1,702	12	21,198
Kirkland	9,180	677	6,212,415
Lake Plaza	9,199	140	1,290,340
Rose Point	4,965	25	123,978
South Bay	5,071	7	34,596
Trend	6,356	19	119,927
Watershed Park	3,871	8	31,016
Waverly Park	8,957	45	407,456
Yarrow Bay	8,475	184	1,556,817
Yarrow Bay II	8,463	8	67,271

Existing and Projected Wastewater Flow Rates

Population projections for the 2021 and 2035 planning horizons were used to calculate projected flow rates. **Table ES-8** summarizes the existing and projected flow rates for the City's sewer drainage basins.

Table ES-8
Projected Sewer Drainage Basin Domestic AAF and Total PHF Rates

Basin Name	Existing (2014)				Projected 2021				Projected 2035			
	Domestic AAF (gpd)	Domestic PHF (gpm)	Peak Hour I/I (gpm)	Total PHF (gpm)	Domestic AAF (gpd)	Domestic PHF (gpm)	Peak Hour I/I (gpm)	Total PHF (gpm)	Domestic AAF (gpd)	Domestic PHF (gpm)	Peak Hour I/I (gpm)	Total PHF (gpm)
116th Avenue NE	9,880	30	90	120	17,065	50	115	165	18,300	55	170	225
Eastside Interceptor	1,215,100	2,255	7,225	9,480	1,430,120	2,655	7,400	10,050	1,806,165	3,350	7,805	11,155
Juanita	214,000	505	1,845	2,350	263,595	620	1,870	2,490	331,280	780	1,930	2,710
Juanita Bay	23,270	65	15	80	26,320	75	15	90	26,550	75	15	90
Kirkland	550,295	1,155	4,315	5,465	852,525	1,785	4,320	6,105	1,017,870	2,130	4,325	6,460
Lake Plaza	160,015	390	895	1,285	194,760	475	895	1,370	201,845	490	895	1,390
Rose Point	18,245	50	85	140	20,605	60	85	145	22,985	65	85	150
South Bay	4,290	15	25	35	4,845	15	25	40	4,920	15	35	45
Trend	6,190	20	85	100	7,155	20	85	105	8,360	25	85	110
Watershed Park	6,450	20	20	40	7,285	20	20	45	7,550	20	20	45
Waverly Park	13,145	40	285	320	14,845	45	285	325	16,640	50	285	330
Yarrow Bay	171,790	415	1,080	1,495	199,820	485	1,085	1,570	283,560	685	1,100	1,790
Yarrow Bay II	3,830	10	45	60	4,325	15	45	60	4,380	15	45	60
Yarrow Bay (Bellevue)[1]	264,320	365	975	1,340	272,160	380	975	1,350	287,840	400	975	1,375

NOTES:
-Flows shown in this table are rounded off and approximate.
1. These existing and projected wastewater flows are for the City of Bellevue's (Bellevue) Yarrow Bay Sewer Drainage Basin that discharges to the City's Yarrow Bay Sewer Drainage Basin. Wastewater flows from Bellevue's Yarrow Bay Sewer Drainage Basin are not included in the City's historical and projected wastewater flow totals presented in this chapter.

Current lift station pumping capacity and flow rate projections are provided in **Table ES-9**. As shown in the table below, capacity upgrades to the Waverly Park and Lake Plaza Lift Stations may be necessary to handle future flows.

Table ES-9
Projected Lift Station Domestic AAF and Total PHF Rates

Lift Station	Firm Capacity (gpm)	Existing (2014)		Projected 2021		Projected 2035	
		Domestic AAF (gpd)	Total PHF (gpm)	Domestic AAF (gpd)	Total PHF (gpm)	Domestic AAF (gpd)	Total PHF (gpm)
Lake Plaza	1,157	160,015	**1,285**	194,760	**1,370**	201,845	**1,390**
Rose Point	297	18,245	140	20,605	145	22,985	150
South Bay	161	4,290	35	4,845	40	4,920	45
Trend	211	6,190	100	7,155	105	8,360	110
Waverly Park	285	13,145	**320**	14,845	**325**	16,640	**330**
Yarrow Bay II	106	3,830	60	4,325	60	4,380	60

NOTES:
-Flows shown in this table are rounded off and approximate.
-Highlighted flows exceed the current firm capacity of the lift station.

Summary of Improvements

A general description of the recommended improvements and an overview of the deficiencies they will resolve are presented in **Chapter 7**. A condensed version of the proposed improvements implementation schedule is presented in **Table ES-10**. The Capital Improvement Plan (CIP) numbers for recommended improvements to the existing sewer mains that were identified prior to this GSP have an "SM" prefix. The CIP numbers for recommended improvements to the existing sewer mains that were identified in this GSP, but not identified prior to this GSP, have an "EX" prefix. These "EX" improvements are all identified under SM14 (Annual Sanitary Pipeline Replacement Program). The CIP numbers for recommended improvements to existing facilities, such as lift stations and force mains, have an "F" prefix. The CIP numbers for recommended planning studies have an "M" prefix. Some improvements will be necessary to serve areas in the City's sewer service area that will be redeveloped with higher densities or to add sewer system extensions to serve unsewered neighborhoods in the City's sewer service area. The CIP numbers for developer-funded improvements have a "DF" prefix.

Table ES-10
Proposed Improvements Implementation Schedule

CIP No.	Project Description In	From	To	Size Length (LF)	Diameter (in.)	Estimated Cost	Rank Points	Priority Rank	2016	2017	2018	2019	2020	2021	2022	2023	2024	2025	2026-2035	2035+
									Planned Year of Project and Estimated Cost (x 1,000)											
	Sewer Main Improvements																			
SM1	6th Street S Sewer Main Replacement (SS 0051)			950	15", 12"	$965,000	30	M		$146	$819									
SM2	108th Avenue NE Sewer Main Replacement (SS 0052)			4,000	12", 8"	$5,506,000	59	H			$711	$3,236	$1,559							
SM3	NE 108th Street Sewer Main Replacement (SS 0062)			3,000	18", 15"	$6,569,500	38	M					$3,390	$3,179						
SM4	1st Street Sewer Main Replacement (SS 0069)			4,170	8"	$3,820,000	51	H	$354	$3,466										
SM5	5th Street Sewer Main Replacement (SS 0070)			1,430	12", 8"	$1,284,000	41	H	$420	$865										
SM6	6th Street Sewer Main Replacement (SS 0071)			325	8"	$287,000	59	H	$287											
SM7	Kirkland Avenue Sewer Main Replacement (SS 0072)			1,550	12"	$2,298,400	54	H			$285	$2,013								
SM8	3rd Avenue S and 2nd Street S Sewer Main Replacement (SS 0079)			780	8"	$361,600	65	H	$362											
SM9	3rd and Central Way Sanitary Sewer Crossing (SS 0082)			90	30"	$300,000	30	M	$300											
SM10	West of Market Sewer Main Replacement (SS 0077)			45,000	12", 8"	$21,681,000	65	H					$225	$2,500	$2,500	$2,500	$2,500	$2,500	$8,956	
SM11	Annual Sewer Critical Areas Ordinance / Surface Water Design Manual Support (SS 7777)			---	---	$700,000	---	---		$700										
SM12	Annual Sanitary Pipeline Replacement Program (SS 8888)			---	---	$1,333,200	---	---						$400	$933					
SM13	Annual Sanitary Pump Station/System Upgrade Program (SS 9999)			---	---	$1,333,200	---	---						$400	$933					
SM14	Annual Sanitary Pipeline Replacement Program (CIP EX2 through CIP EX322)			275,000	36", 30", 24", 18", 15", 12", 8", 6"	$236,158,000	---	---								$3,413	$2,315	$2,373	$55,190	$172,867
Total - Sewer Main Improvements						**$282,596,900**	**---**	**---**	**$1,722**	**$5,176**	**$1,815**	**$5,250**	**$5,174**	**$6,480**	**$4,366**	**$5,913**	**$4,815**	**$4,873**	**$64,146**	**$172,867**
	Facility Improvements																			
F1	Rose Point Sewer Lift Station Replacement (SS 0073)					$1,110,000	---	---	$1,110											
F2	Trend Lift Station Abandonment					$3,551,000	---	---								$710	$1,420	$1,420		
F3	Waverly Park Lift Station Improvements					$1,178,000	---	---								$236	$471	$471		
Total - Facility Improvements						**$5,839,000**	**---**	**---**	**$1,110**	**$0**	**$0**	**$0**	**$0**	**$0**	**$0**	**$946**	**$1,892**	**$1,892**	**$0**	**$0**
	Miscellaneous and Planning Improvements																			
M1	Reclaimed Water (Purple Pipe) Opportunity Fund (SS 0084)					$5,000,000	---	---											$5,000	
M2	Inflow and Infiltration Study					$250,000	---	---								$63	$150	$38		
M3	General Sewer Plan Update (Update Every 10 Years)					$600,000	---	---										$150	$150	$300
Total - Miscellaneous Improvements						**$5,850,000**	**---**	**---**	**$0**	**$0**	**$0**	**$0**	**$0**	**$0**	**$0**	**$63**	**$150**	**$188**	**$5,150**	**$300**
Total Estimated Project Costs of City-funded Improvements						**$294,285,900**	**---**	**---**	**$2,832**	**$5,176**	**$1,815**	**$5,250**	**$5,174**	**$6,480**	**$4,366**	**$6,921**	**$6,857**	**$6,952**	**$69,296**	**$173,167**
	Developer-funded Improvements - 2021 Projections																			
DF1	Lake Plaza Lift Station Improvements					$1,257,000	Timing of Project Based on Timing of Future Developments													
~~DF2~~	~~~120th Ave NE~~	~~NE 124th St~~	~~~NE 122nd Way~~	~~1,050~~	~~12"~~	~~$877,000~~	~~Timing of Project Based on Timing of Future Developments~~													
DF3	NE 112th St	120th Ave NE	Cross Kirkland Corridor	250	12"	$209,000	Timing of Project Based on Timing of Future Developments													
DF4	Slater Ave NE	~NE 103rd Pl	~NE 102nd Pl	425	24"	$576,000	Timing of Project Based on Timing of Future Developments													
Total - Developer-funded Improvements - Prior to 2021						**$2,042,000**	**Timing of Projects Based on Timing of Future Developments**													
	Developer-funded Improvements - 2035 Projections																			
~~DF5~~	~~W of 120th Ave NE~~	~~~NE 122nd Way~~	~~~NE 120th St~~	~~600~~	~~12"~~	~~$501,000~~	~~Timing of Project Based on Timing of Future Developments~~													
DF6	NE 112th St	117th Pl NE	116th Pl NE	300	12"	$251,000	Timing of Project Based on Timing of Future Developments													
DF7	124th Ave NE	NE 112th Pl	NE 112th St	275	12"	$230,000	Timing of Project Based on Timing of Future Developments													
DF8	NE 97th St	Slater Ave NE	~50' E of Slater Ave NE	50	24"	$45,000	Timing of Project Based on Timing of Future Developments													
DF9	NE 97th St 124th Ave NE NE 95th St	124nd Ln NE NE 97th St 124th Ave NE	124th Ave NE NE 95th St 125th Ave NE	1,175	18"	$1,025,000	Timing of Project Based on Timing of Future Developments													
DF10	128th Ave NE	~75' N of NE 91st Ln	NE 91st Ln	75	15"	$157,000	Timing of Project Based on Timing of Future Developments													
DF11	Waverly Way	~120' NE of Slater Ave NE	~360' NE of 2nd St W	750	18"	$654,000	Timing of Project Based on Timing of Future Developments													
DF12	NE 70th Street	~126th Ave NE	~127th Ave NE	325	12"	$272,000	Timing of Project Based on Timing of Future Developments													
Total - Developer-funded Improvements - Prior to 2035						**$2,634,000**	**Timing of Projects Based on Timing of Future Developments**													
Total Estimated Project Costs of Developer-funded Improvements						**$4,676,000**	**Timing of Projects Based on Timing of Future Developments**													

NOTES:
- Cost estimates for **CIP SM1** through **CIP SM13** and **CIP F1** were provided by the City.
- Estimated costs presented in this table are in 2017 dollars.
- Projects that are struck through were removed because they are located in the area that was acquired by Northshore in 2017 (NE 124th Street Sewer Drainage Basin). Costs for these projects were omitted from this table.

Project costs for the proposed improvements were estimated based on costs of similar, recently constructed sewer projects in the City and around the Puget Sound area and are presented in 2017 dollars. The cost estimates include construction and indirect costs. The recommended existing sewer main improvements that were identified prior to this GSP (i.e., the improvements identified under CIP SM1 through CIP SM13) were prioritized by the City based on the perceived need for the improvements. The recommended existing collection system improvements that were not identified prior to this GSP (i.e., the improvements identified under CIP SM14) were prioritized based on the criteria presented in **Chapter 7**. The schedule for the developer-funded projects will be dependent on the timing and design of the specific development areas. A general schedule has been established for planning purposes; it is anticipated that this estimated schedule will be modified as development occurs. In addition, the City retains the flexibility to reschedule, expand, or reduce CIP projects when new information becomes available for review and analysis.

Operation and Maintenance

Chapter 8 addresses the operation and maintenance (O&M) program and staff for the City's sewer system. Currently, there are nine personnel assigned to the O&M of the sewer system. It is recommended that the City hire additional personnel to staff sewer O&M needs, as shown in **Table ES-11**. In addition, the collection system may need additional maintenance as the sewer system population continues to grow, and the City may need to hire additional staff to maintain the gravity sewers, force mains, and pump stations.

Table ES-11
Staffing Recommendation

Population	29,481	25,000	50,000	29,481	25,000	50,000
Occupational Title	**City's Wastewater Division**	**Recommended Number of Staff[1]**		**City's Wastewater Division**	**Recommended Man Hours per Week[1]**	
Utility Manager[1]	1	1.0	1	1	13	24	20	40
Supervisor[1]	1	0.2	-	1	20	7	-	40
Lead[1]	1	1.0	1	1	10	24	20	40
Senior Maintenance[1]	2	1.2	1	2	80	31	20	80
Utility Workers[1]	3	2.2	2	3	120	71	60	120
Maintenance Equipment Operator	-	1.2	1	2	-	47	40	80
Construction Equipment Operator	-	1.0	1	1	-	24	20	40
Laborer	-	2.0	2	2	-	47	40	80
Maintenance Mechanic II[2]	-	0.4	-	-	-	16	-	-
Maintenance Mechanic I[3]	-	0.4	-	-	-	16	-	-
Maintenance Mechanic Helper[3]	-	0.4	-	-	-	16	-	-
Pretreatment Technician	1	-	-	-	20	-	-	-
Total Staff[4]	**9**	**10.9**	**9**	**13**	**263**	**322**	**220**	**520**

NOTES:
1. Recommended number of staff and man hours per week are interpolated from information provided by Water Pollution Control Federation Manual of Practice No. 7 "Operations and Maintenance of Wastewater Collection Systems." Utility Manager referred to as Superintendent, Supervisor referred to as Maintenance Supervisor, Lead referred to as Foreman, Senior Maintenance referred to as Maintenance II and Mason II, and Utility Worker referred to as Maintenance I and Mason I in Water Pollution Control Federation Manual of Practice No. 7 "Operations and Maintenance of Wastewater Collection Systems."
2. Multiply number of lift stations maintained by 2.67 to approximate number of man hours per week recommended. The City has six lift stations that it maintains.
3. Multiply number of lift station visits per week by 2.67 to approximate number of man hours per week recommended. The City has six lift stations that it visits each week for maintenance.
4. Some staff, such as clerks and construction inspectors, have been omitted from this list due to support the Wastewater Division receives from other divisions and departments.

Financial Summary

Improvements to the system are primarily necessary to resolve existing system deficiencies, but they will also improve operations, replace older aging infrastructure, and accommodate future sewer customers. Improvements identified for the first 6 years of the capital improvement program

(2016 to 2022) are estimated to cost approximately $31,092,900 (in 2017 dollars), which results in an average expenditure of approximately $4,442,000 per year (in 2017 dollars). Scheduled improvements within the City's 20-year capital improvement program (2016 to 2035) are estimated to cost approximately $121,118,900 (in 2017 dollars).

As the existing infrastructure continues to age, managing and funding the sewer system CIP is essential for maintaining a safe and reliable sewer collection system for the City's customers. Based on the City's geographic information system (GIS) data, approximately 65 percent of the City's existing sewer collection system is greater than 40 years old or has an unknown age. As funding becomes available, the City should consider a more aggressive sewer main repair and replacement program or develop asset management strategies to address future infrastructure needs.

The financial analysis is intended to illustrate the feasibility of funding the operation, maintenance, and capital improvements planned for the sewer system for the next 6 years. The City continues to maintain the sewer utility in a healthy financial position and is taking steps with this GSP to ensure future stability of the sewer utility's financial status. The revenue needs forecast provides for between 1.6 percent and 5.8 percent composite rate increases each year through 2021.

The City has established rates that are affordable to its customers and has earned a reputation for providing high-quality customer service. The City's proven financial strength will ensure that customers will continue to receive the same high-quality level of service they have come to expect.

THIS PAGE INTENTIONALLY LEFT BLANK

Introduction

1

SEWER SYSTEM OWNERSHIP AND MANAGEMENT

The City of Kirkland (City) is a municipal corporation that owns and operates a public sewer collection system. The sewer utility is managed by the Wastewater Division of the City's Public Works' Utilities Division. The sewer utility serves the southern portion of the City, while Northshore Utility District (Northshore) generally provides service to the part of the City that is north of NE 116th Street.

OVERVIEW OF EXISTING SYSTEM

The City's existing sewer service area is approximately 5,630 acres (8.80 square miles) and is generally a blend of commercial, single-family, and multi-family neighborhoods. In 2014, approximately 29,481 people received sewer service through 9,825 residential customer connections. The City also provides service to an additional 608 commercial connections.

The City's sewer utility consists of one manager, one supervisor, and seven collections staff. The collections staff maintains 6 wastewater lift stations, approximately 122 linear miles of gravity sewer piping, and approximately 6,230 linear feet (LF) of force main. In general, the City's sanitary sewer system conveys wastewater to King County's (County) Eastside Interceptor that passes through the City's wastewater service boundary. The interceptor transports collected flows south to the County's wastewater treatment plant located in Renton, Washington. A majority of the wastewater that enters the east side of the system is conveyed to the Eastside Interceptor by gravity. A majority of the wastewater entering the system on the west side of the Eastside Interceptor is conveyed by pumping or gravity to one of three County-operated lift stations that pump directly to the Eastside Interceptor. One basin in the northern section of the system collects and deposits wastewater into Northshore's sewer system, and three basins in the southern section of the system collect and deposit wastewater into the City of Bellevue's (Bellevue) sewer system. Bellevue's Yarrow Bay Sewer Drainage Basin discharges wastewater to the City's sewer system. A summary of wastewater utility data is provided in **Table 1-1**.

At the time this GSP was being drafted, the City and Northshore were working on a mutual agreement to have Northshore assume ownership of the NE 124th Street sewer drainage basin. This agreement was completed in 2017. For the purposes of this GSP, the NE 124th Street sewer drainage basin was included in the City's sewer service area for all historical data and projections. However, the wastewater flow projections for this sewer drainage basin are not shown separated from the other sewer drainage basins in this GSP. In addition, the wastewater collection system for this sewer drainage basin, except for **Figure 2-4**, and the proposed wastewater collection system improvements for this sewer drainage basin are not shown in this GSP since this area is now maintained and operated by Northshore.

Table 1-1
2014 Sewer System Summary

Description	Data
City Population	82,590
Sewer Service Area Population	29,481
Sewer Service Area Employees	30,124
Number of Parcels on Septic System (In City's Wastewater Service Area)	785
Wastewater Service Area (acres)	5,630
Total Connections	10,433
Residential Domestic AAF per Capita (gpcd)	63
Commercial Domestic AAF per Employee (gped)	18
Domestic AAF per ERU (gpd per ERU)	136
Total Domestic AAF (MGD)	2.41
Number of Sewer Drainage Basins	13
Number of Pump Stations and Total Firm Capacity	6 (2,217 gpm)
Total Length of Gravity Sewer Main (miles)	~ 121.9
Total Length of Force Main (miles)	~ 1.2

AUTHORIZATION AND PURPOSE

In July 2015, the City authorized RH2 Engineering, Inc., (RH2) to prepare a General Sewer Plan (GSP) in accordance with Washington Administrative Code (WAC) 173-240-050. The previous GSP was prepared for the City in 2010. The purpose of this updated GSP is as follows.

- To evaluate existing sewer flow data and project future flows.
- To analyze the existing sewer system to determine if it meets minimum requirements mandated by the Washington State Department of Ecology, and the City's own policies and design criteria.
- To determine the overall reliability and vulnerability of existing wastewater lift stations.
- To identify sewer system improvements that will resolve existing system deficiencies and accommodate future system needs.
- To prepare a schedule of improvements that meets the goals of the City's financial program.

SUMMARY OF PLAN CONTENTS

A brief summary of the content of the chapters in this GSP is as follows.

- **Chapter 1** introduces the reader to the City's sewer system, the objectives of the GSP, and the GSP's organization.
- **Chapter 2** presents the sewer service area and describes the existing sewer system.
- **Chapter 3** presents related plans, land use, and population characteristics.
- **Chapter 4** identifies existing wastewater flow rates and projects future rates.
- **Chapter 5** presents the City's operational policies and design criteria.
- **Chapter 6** discusses the sewer system analyses and existing system deficiencies.

- **Chapter 7** presents the proposed sewer system improvements, their estimated costs, and a schedule for implementation.
- **Chapter 8** discusses the City's sewer system operations and maintenance program.
- **Chapter 9** summarizes the financial status of the sewer utility and presents a plan for funding the sewer improvements.

DEFINITION OF TERMS

The following terms are used throughout this GSP.

Connection Charge: A charge for a share of the City's wastewater system that each service connection must pay as a condition of being allowed to connect to the City's wastewater system. The proportionate share is based on the historic value of the system.

Flow: The quantity (volume) of wastewater conveyed during a certain time period. Flows are normally discussed in terms of flow rate, such as million gallons per day (MGD) or gallons per minute (gpm). Flow rates pertinent to the analysis and design of wastewater systems are as follows.

- **Average Annual Flow (AAF):** The total amount of wastewater collected by the system in a year divided by the number of days in the year.
- **Maximum Day Flow (MDF):** The maximum amount of wastewater collected by the system during a 24-hour time period of a given year.
- **Peak Hour Flow (PHF):** The maximum amount of wastewater collected by the system, during a 1-hour time period of a given year.

Equivalent Residential Units (ERUs): One ERU represents the amount of domestic wastewater produced by one single-family residence for a specific wastewater system. The domestic wastewater flow from other customer classes can be expressed in terms of ERUs by dividing the domestic wastewater flow of each of the other customer classes by the domestic wastewater flow represented by one ERU.

Head: A measure of pressure or force exerted by water. Head is measured in feet and can be converted to pounds per square inch (psi) by dividing feet by 2.31.

Inflow and Infiltration: The combination of groundwater and surface water that enters the sewer system. Infiltration is typically groundwater entering the sewer system through defects in the sewer system infrastructure, such as fractured pipes and leaking manholes and pipe joints. Inflow is typically surface water that enters the sewer system from sources such as roof and street drains and leaky manhole covers.

Purveyor: An agency, subdivision of the state, municipal corporation, firm, company, mutual or cooperative association, institution, partnership, or persons, or other entity owning or operating a public wastewater system. Purveyor also means the authorized agents of such entities.

LIST OF ABBREVIATIONS

The abbreviations listed below in **Table 1-2** are used throughout this GSP.

Table 1-2
Abbreviations

Abbreviation	Description
AAF	Average Annual Flow
AC	Asbestos Cement
AWWC	Average Winter Water Consumption
Bellevue	City of Bellevue
CIP	Capital Improvement Plan
City	City of Kirkland
County	King County
DI	Ductile Iron
Ecology	Washington State Department of Ecology
EPA	U.S. Environmental Protection Agency
ERP	Emergency Response Plan
ERU	Equivalent Residential Unit
FOG	Fats, Oils, and Grease
fps	Feet per Second
GIS	Geographic Information System
GMA	Growth Management Act
gpad	Gallons per Acre per Day
gpcd	Gallons per Capita per Day
gpd	Gallons per Day
gped	Gallons per Employee per Day
gpm	Gallons per Minute
GSP	General Sewer Plan
HDPE	High Density Polyethylene
hp	Horsepower
I/I	Inflow and Infiltration
KCWTD	King County Department of Natural Resources and Parks, Wastewater Treatment Division
L&I	Labor and Industries
LF	Linear Feet
LID	Local Improvement District
MDF	Maximum Day Flow
MGD	Million Gallons per Day
MUTCD	Manual on Uniform Traffic Control Devices
Northshore	Northshore Utility District
NPDES	National Pollutant Discharge Elimination System
O&M	Operations and Maintenance
OSHA	Occupational Safety and Health Administration
PHF	Peak Hour Flow
PSRC	Puget Sound Regional Council
PVC	Polyvinyl Chloride
RCW	Revised Code of Washington
Redmond	City of Redmond
RTU	Remote Terminal Unit
SCADA	Supervisory Control and Data Acquisition
SEPA	State Environmental Policy Act
SSO	Sanitary Sewer Overflow
State	State of Washington
TAZ	Traffic Analysis Zone
TDH	Total Dynamic Head
UGA	Urban Growth Area
ULID	Utility Local Improvement District
WAC	Washington Administrative Code
WISHA	Washington Industrial Safety and Health Act
WSDOT	Washington State Department of Transportation
WWTP	Wastewater Treatment Plant

Sewer System Description

2

INTRODUCTION

This chapter describes the City of Kirkland's (City) sewer service area, the existing sewer system, and its individual components. The results of the evaluation and analyses of the existing sewer system are presented in **Chapters 4** and **6.**

SEWER SERVICE AREA

History

The City's two most recent sewer plans were completed in 1993 and 2010. The following information was provided in the 2010 *General Sewer Plan* (GSP) prepared by Roth Hill, LLC, and is presented below to preserve the historical information.

The sanitary collection system for the City was first constructed in the downtown area in the early 1940s as part of the federal government war housing projects. By 1950, approximately 30 percent of the sewer collection system was constructed. A primary wastewater treatment plant was also constructed in the vicinity of 3rd Street and Central Way as part of the war housing projects, with an outfall to Lake Washington. In 1959, the King County Department of Natural Resources and Parks, Wastewater Treatment Division (KCWTD), formally known as the Municipality of Metropolitan Seattle (METRO), prepared a regional plan for the wastewater collection and treatment facilities. KCWTD assumed the operation of the regional interceptors and wastewater treatment systems, which included the City's primary wastewater treatment plant, in 1962. The primary wastewater treatment plant was eventually abandoned and a KCWTD owned and operated lift station was constructed to convey wastewater flows to the new interceptor. Currently, all of the City's wastewater discharges to KCWTD facilities. The Rose Hill sewer system was assumed by the City in 1989, and City-constructed sewer improvements in that area have allowed connection to the City's sewer collection system.

The City was incorporated in 1905 and provides sewer service to 29,481 people within the sewer service area. The City is located in King County (County), Washington, along the eastern shore of Lake Washington. The City boundary currently encompasses an area of approximately 18.2 square miles that extends north to NE 145th Street, furthest east to the Sammamish River, and furthest south to State Route 520. The City's sewer service area is located within the City limits and is bordered on the west by Lake Washington, on the east by the City of Redmond (Redmond), on the north by Northshore Utility District (Northshore), and on the south by the City of Bellevue (Bellevue), shown in **Figure 2-1**.

The City's sanitary sewer collection system consists of 6 lift stations, approximately 6,230 linear feet (LF) of force main, and approximately 122 linear miles of gravity sewer main. The properties currently served by the sewer system are generally a blend of commercial, single-family, and multi-family neighborhoods. A majority of the City's wastewater flows by gravity or is pumped to the County's Eastside Interceptor, which runs through the City, and is conveyed south through the County's conveyance system to the South Treatment Plant located in Renton. Flows from several sewer drainage basins discharge north into Northshore's facilities and south into Bellevue's facilities. There are no existing connections to Redmond's sanitary sewer system. **Figure 2-2** is a map of the existing sewer system based on gravity main diameter, **Figure 2-3A** is a map of the existing sewer system based on gravity main installation year, and **Figure 2-3B** is a map of the existing sewer system based on gravity main material.

Geology and Topography

The City is known for its walkable downtown with a waterfront along Lake Washington, as well as its parks and trails, including the Cross-Kirkland Corridor. It is home to many high-technology industry employees, as well as some high-technology industry offices.

Valleys and lowlands have been carved into the terrain by several water courses, including Juanita Creek, Forbes Creek, and Cochran Springs. Glacially created basins and depressions are occupied by lakes such as Lake Washington, Forbes Lake, Totem Lake, and their associated wetlands.

The topography of the area served by the City varies greatly in elevation. The east side of the service area is the highest, with the land sloping downward from 132nd Avenue NE to Lake Washington. The ground elevations vary from approximately 500 feet above mean sea level in the Bridle Trails area, to approximately 20 feet above mean sea level along Lake Washington.

The contours for the City's sewer service area are shown in **Figure 2-4**.

Climate

The climate in the City is typical of King County. The average total annual precipitation for the City is approximately 36 inches per year. Precipitation most often occurs as rainfall between the months of October and April, with the heaviest rains generally occurring during the month of November. The average July, which on average is the City's warmest month, temperature for the City is approximately 66 degrees Fahrenheit with an average daily maximum temperature of 76 degrees Fahrenheit. The average December, which on average is the City's coolest month, temperature for the City is approximately 41 degrees Fahrenheit with an average daily minimum temperature of 36 degrees Fahrenheit.

EXISTING SEWER FACILITIES

The City owns, operates, and maintains the wastewater collection system, which includes the collection system piping and six wastewater lift stations. The County continues to operate several facilities within the City's sewer service boundary, including three wastewater lift stations and the Eastside Interceptor. The sewer service area is smaller than the City limits and is shown in **Figures 2-1** and **2-2.** In 2011, the City annexed the areas of Finn Hill, North Juanita, and Kingsgate. These annexations have increased the City limits so that it is the same as the Urban Growth Area (UGA). Northshore currently serves the annexed areas, and there are currently no plans for the City to assume these annexed areas.

Sewer Drainage Basins

The City's existing sewer service area is comprised of 13 major sewer drainage basins and 40 minor sewer basins, as shown in **Figure 2-4**. The minor sewer drainage basins were delineated by others and provided in a digital format by the City's Geographic Information System (GIS) department. The major sewer basins included in this GSP were created by combining adjacent minor basins with similar characteristics and outfalls to simplify the City's sewer drainage basins.

In general, the sanitary sewer system conveys wastewater to the County's Eastside Interceptor that passes through the City's wastewater service boundary. The interceptor transports collected flows south to the County's wastewater treatment plant located in Renton, Washington. A majority of the

wastewater that enters the east side of the system is conveyed to the Eastside Interceptor by gravity. A majority of the wastewater entering the system on the west side of the Eastside Interceptor is conveyed by pumping or gravity to one of three County-operated lift stations that pump directly to the Eastside Interceptor. One basin in the northern section of the system collects and deposits wastewater into Northshore's sewer system, and three basins in the southern section of the system collect and deposit wastewater into Bellevue's sewer system. Bellevue's Yarrow Bay Sewer Drainage Basin discharges wastewater to the City's sewer system. **Figure 2-5** shows a schematic representation of the general location and flow path for each of the 13 major sewer drainage basins.

Figure 2-5
Major Sewer Drainage Basins Schematic

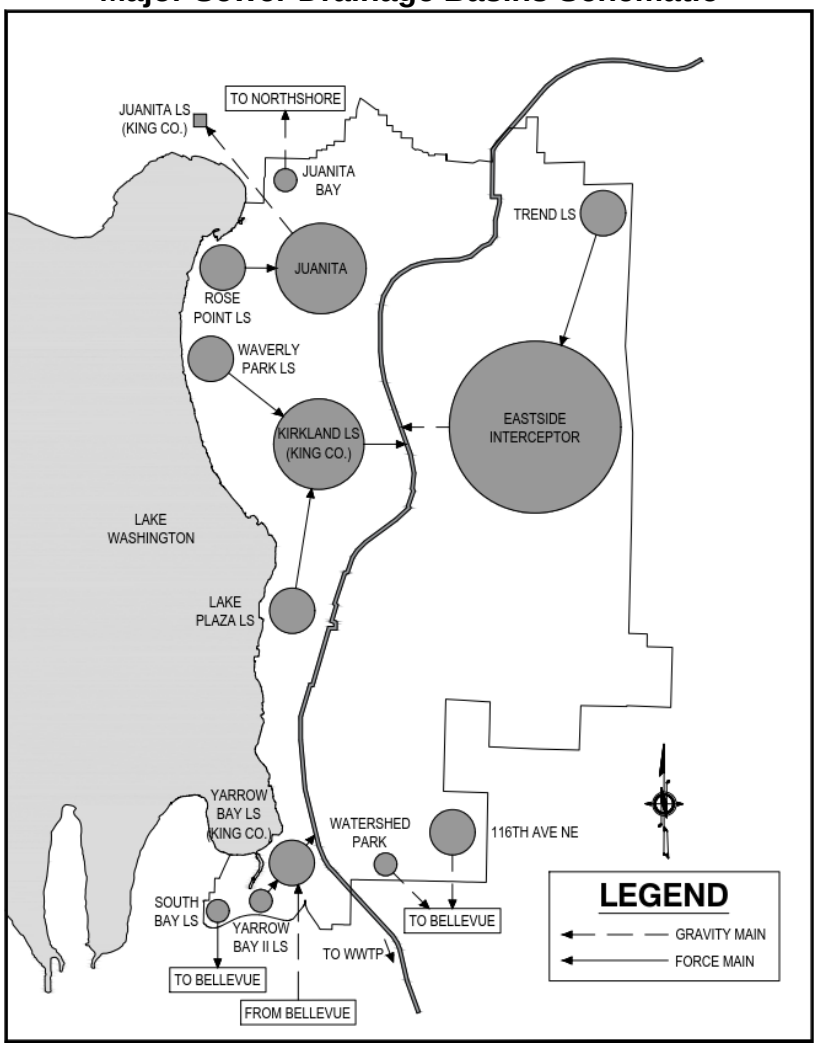

Collection Piping

The City has approximately 122 linear miles of gravity sewer piping, including collection sewers and interceptors. There are approximately 6,230 LF of force main throughout the system. **Table 2-1** summarizes the pipe by diameter. **Figure 2-2** illustrates pipe sizes and locations.

Table 2-1
Sewer Piping Inventory

Gravity Main

Diameter (inches)	Length (feet)	Length (miles)	% of Total
6	63,221	12.0	9.8%
8	505,801	95.8	78.6%
10	15,307	2.9	2.4%
12	27,031	5.1	4.2%
15	11,186	2.1	1.7%
16	28	0.01	0.004%
18	8,605	1.6	1.3%
20	1,344	0.3	0.2%
21	8,785	1.7	1.4%
24	1,797	0.3	0.3%
36	306	0.1	0.05%
Total	**643,411**	**121.9**	**100%**

Force Main

Diameter (inches)	Length (feet)	Length (miles)	% of Total
4	3,235	0.6	52%
6	2,220	0.4	36%
8	776	0.15	12%
Total	**6,231**	**1.2**	**100%**

Collection System

Diameter (inches)	Length (feet)	Length (miles)	% of Total
Combined Total	649,642	123.0	100%

Lift Stations

The City currently owns, operates, and maintains six wastewater lift stations. Five of the wastewater lift stations have a wetwell/drywell configuration, while the sixth is a submersible-type lift station. Each sewage lift station either has a stand-alone emergency generator or a pig tail to connect to an emergency generator. The operation of the pumps in the lift stations are controlled by the water level in the wetwells. The characteristics of each lift station are summarized in **Table 2-2**, and a description of each lift station follows. During the development of this GSP update, City staff conducted drawdown tests at each lift station. For modeling purposes, the flow rates recorded during the City-conducted drawdown tests were considered to be the firm capacities of each lift station. The City performed additional drawdown tests in 2018. Tests were performed on each

pump individually and with two pumps in operation at each lift station. The measurements and results from these tests can be found in **Appendix E**.

Table 2-2
Lift Station Characteristics

Lift Station Name	Force Main Diameter (in)	Total Dynamic Head (TDH) (ft)	Design Capacity (gpm)*	Drawdown Test Capacity (gpm)	Firm Capacity (gpm)
Rose Point	6	66	250	297	297
South Bay	4	190	150	161	161
Yarrow Bay II	4	46	125	106	106
Waverly Park	6	104	320	285	285
Trend	4	25	120	211	211
Lake Plaza[1,2]	8	45	750	1,157	1,157

NOTES:
*gpm = gallons per minute
1. The design capacity provided for Lake Plaza Lift Station is for one pump in operation. The drawdown test capacity and firm capacity provided for Lake Plaza Lift Station are for two pumps in operation.
2. The drawdown testing performed by the City indicated that the capacity of the Lake Plaza Lift Station with one pump in operation is 801 gpm.

Rose Point Lift Station

Rose Point Lift Station

The Rose Point Lift Station, located at 1803 10th Street West, was constructed in 1977. This wetwell/drywell lift station is located at the northwest end of the collection system near Juanita Bay. The lift station has two pumps, each with a design capacity of 250 gallons per minute (gpm) at 66 feet of discharge head. This station has a 6-inch-diameter ductile iron (DI) force main with an approximate length of 1,800 LF. It also includes a portable engine generator connection for backup power; standby power is provided via an on-site engine generator. The station's overflow system discharges to Lake Washington by Kiwanis Park near the water surface level. The overflow pipe was plugged with a mechanical plug from within the lift station wetwell in July 2018. The City has no known history of overflows occurring at Rose Point Lift Station in the last decade.

A replacement for the Rose Point Lift Station is currently being designed, which is 90-percent complete, and is anticipated to have construction completed in 2019. The proposed lift station includes decommissioning of the station's overflow system. The proposed lift station is anticipated to have two submersible pumps and a firm capacity of 300 gpm at 67 feet of discharge head. The proposed lift station is anticipated to have a wetwell, valve vault, control building, and backup diesel generator. In addition, the existing wetwell will be utilized as emergency offline storage for the proposed lift station.

South Bay Lift Station

The South Bay Lift Station, located at 3814 97th Avenue NE, was constructed in 1987 and serves the primarily residential neighborhood in the southwest corner of the wastewater service area. This is a wetwell/drywell lift station with two pumps, each with a design capacity of 150 gpm at 190 feet discharge head. This station has a 4-inch diameter DI force main with an approximate length of 1,350 LF. It does not have a designated overflow system but does have a secondary wetwell sized for 4 days of storage under average day flow conditions. This station has a portable engine generator connection for backup power.

South Bay Lift Station

Yarrow Bay II Lift Station

The Yarrow Bay II Lift Station, located at 3701 101st Way NE, was constructed in 1995 and serves several multi-family residences in the area. This is a wetwell/drywell lift station with two pumps, each with a design capacity of 125 gpm at 46 feet discharge head. This station has a 4-inch diameter DI force main with an approximate length of 820 LF. This station does not have an overflow. Standby power is provided via an on-site engine generator.

Yarrow Bay II Lift Station

As shown in **Table 2-2**, the drawdown pump tests performed by the City at this lift station indicate the current capacity of each pump is less than the design capacity. The lower pumping rates have not been investigated by the City yet. The lower pumping rates could be due to a number of reasons including, but not limited to, the difference in the pump intake and discharge elevations constructed being greater than what was designed, pump impellors becoming worn, or a restriction or buildup of material in the force main. The City will continue to monitor these pumps and may further investigate this manner if it develops into an issue for this lift station.

Waverly Park Lift Station

The Waverly Park Lift Station is located at 633 Waverly Park Way and was constructed in 2005. It is located on the western edge of the collection system along Lake Washington. This is a submersible lift station with two pumps, each with a design capacity of 320 gpm at 104 feet discharge head. This station has a 6-inch diameter DI force main with an approximate length of 105 LF. This station does not have an overflow. Standby power is provided via an on-site engine generator. This station also has a portable engine generator connection for backup power.

Waverly Park Lift Station

As shown in **Table 2-2**, the drawdown pump tests performed by the City at this lift station indicate the current capacity of each pump is less than the design capacity. The lower pumping rates have not been investigated by the City yet. The lower pumping rates could be due to a number of reasons including, but not

limited to, the difference in the pump intake and discharge elevations constructed being greater than what was designed, pump impellors becoming worn, or a restriction or buildup of material in the force main. The City will continue to monitor these pumps and may further investigate this manner if it develops into an issue for this lift station.

Trend Lift Station

Trend Lift Station

The Trend Lift Station, located at NE 112th Street and 132nd Avenue NE, was constructed in 1968 and serves less than 40 residences in the area. This wetwell/drywell lift station is located at the northeastern end of the collection system. The lift station has two pumps, each with a design capacity of 120 gpm at 25 feet of discharge head. This station has a 4-inch DI force main with an approximate length of 1,140 LF. This station has a portable engine generator connection for backup power.

The City is developing a plan to abandon the Trend Lift Station in the future. The City would like to replace this lift station with gravity sewer main.

Lake Plaza Lift Station

Lake Plaza Lift Station

The Lake Plaza Lift Station is located at 70 Kirkland Avenue and was constructed in 1997. This wetwell/drywell lift station has three pumps, each with a design capacity of 750 gpm at 45 feet of discharge head. This station has an 8-inch DI force main with an approximate length of 725 LF. Standby power is provided via an on-site engine generator.

The drawdown pump tests performed by the City at the Lake Plaza Lift Station indicate each pump running individually has a capacity of 801 gpm, and the firm capacity of this lift station with two pumps in operation is 1,157 gpm, as provided in **Table 2-2**. The capacity of this lift station with two pumps in operation is not twice of what it is with one pump in operation because all three of the lift station pumps discharge through the same force main and the friction losses in this force main increase exponentially as the flow rate increases with two pumps in operation.

Wastewater Treatment and Disposal Facilities

The wastewater generated in the City's sewer service area is conveyed to the County's South Wastewater Treatment Plant (South WWTP) through the County's Eastside Interceptor. The County's South WWTP is located at 1200 Monster Road SW, Renton, Washington. This facility is designated as a U.S. Environmental Protection Agency (EPA) major facility due to the magnitude of its daily discharge volume. The South WWTP treats domestic, commercial, and industrial wastewater. It is an activated sludge biological treatment plant that uses chlorine for disinfection. The treated effluent is discharged to the central Puget Sound off the Duwamish Head in West Seattle.

A copy of the current National Pollutant Discharge Elimination System (NPDES) permit for the South WWTP is in **Appendix A**. The City's current agreement with the County (**Appendix B**) does

not include any details regarding committed capacity for the City or regulation of flow rates discharged by the City. The City last renewed its agreement in 2014. However, the County is in the process of updating its service agreements with its wholesale sewer customers. The City anticipates it will likely renew its service agreement with the County during the County's current effort to renew contracts.

Telemetry and Supervisory Control

Successful operation of any municipal sewer system requires gathering and using accurate sewer system information. A telemetry and supervisory control system gathers information and can efficiently control a system by automatically optimizing facility operations. A telemetry and supervisory control system also provides instant alarm notification to operations personnel in the event of equipment failure, operation problem, flood, fire or other emergency situations.

The City completed installation of a supervisory control and data acquisition (SCADA) frame-relay-based telemetry system in the year 2012, which is operated at the City of Kirkland SCADA Telemetry Operations Room. The new frame relay systems are proven to be much more reliable and provide better service than the City's old RUGID system, which operated over the phone lines. Each of the existing lift stations, with the exception of Trend Lift Station, has a remote terminal unit (RTU) compatible with the new SCADA system. The Trend Lift Station has the old RUGID system. These old RUGID system still operates sufficiently, and the telemetry is still functional at Trend Lift Station.

The City is in the process of implementing a SCADA hardware and software replacement program. As part of process, the City's data backup protocol has been updated. The City now has a dedicated off-site server, which is used to store backup data. Only a secured VPN connection is used to access the City's SCADA system remotely.

Industrial Wastewater Facilities/Characterization

Most of the land zoned for industrial use in the City limits is located along the Cross Kirkland Corridor. At this time, it is not anticipated that any major industrial expansion will occur within the City, and it is anticipated that land zoned for light industrial and office commercial use will replace the existing industrial land use zoning over time. The City's 2015 *Comprehensive Plan* indicates that:

> As new industrial development shifts elsewhere in the region, Kirkland's Light Industry/Office areas will serve two vital roles. First, existing development is in demand for a variety of uses that can be accommodated in the existing building stock. Second, over time, more high-tech companies will locate new development in these areas and benefit from the availability of large parcels with access to the Cross Kirkland Corridor and Eastside Rail Corridor and proximity to vibrant neighborhoods.

A list of the known establishments currently producing industrial wastewater is provided in **Appendix H**. In addition, the letters of authorization and authorization permits, where applicable, for the listed establishments in the City's sewer service area are also provided in **Appendix H**.

Projects Completed Since the 2010 GSP

The Plan was last updated in the year 2010. The City has undergone several projects since the previous Plan was first prepared in 2008. **Table 2-3** provides a list of the projects that have been completed since the City's previous GSP.

Table 2-3
Collection System Improvement Projects Completed Since 2010 GSP

Project	Year	Project Description
2007 Emergency Sewer Program	2008	Over 4,500 linear feet (lf) of new sewer main installed and 84 new sewer connections provided in the South Rose Hill and Juanita neighborhoods.
Developer Contributions	2008	Approximately 3,361 lf of sewer main extensions installed.
Developer Contributions	2009	Approximately 2,920 lf of sewer main extensions installed.
2009 Emergency Sewer Program	2010	Approximately 2,350 lf of new sewer main installed and 49 new sewer connections provided in the North Rose Hill and South Rose Hill neighborhoods.
Developer Contributions	2010	Approximately 1,261 lf of sewer main extensions installed.
Developer Contributions	2011	Approximately 47 lf of sewer main extensions installed.
Sewer Telemetry Upgrades	2012	RUGID telemetry system, which operated over a phone line, replaced with a new frame relay SCADA system.
Developer Contributions	2012	Approximately 1,965 lf of sewer main extensions installed.
NE 53rd Street Sewer Main Replacement	2013	Approximately 850 lf of sewer main replaced and 2 manholes replaced/rehabilitated along NE 53rd Street between 108th Avenue NE and 111th Avenue NE.
Developer Contributions	2013	Approximately 2,339 lf of sewer main extensions installed.
2011 Emergency Sewer Program	2014	Approximately 3,961 lf of new sewer main installed and 53 new sewer connections provided.
Developer Contributions	2014	Approximately 2,725 lf of sewer main extensions installed.

The City has not replaced or eliminated any lift stations since the 2010 GSP was prepared. However, the pumps at the Lake Plaza Lift Station have been replaced with higher capacity pumps since the 2010 GSP was prepared.

The Rose Point Lift Station is almost 40 years old and has insufficient pumping capacity at peak flows during major storm events. In addition, this station includes an overflow system that discharges to Lake Washington. A replacement for the Rose Point Lift Station is currently being designed and is anticipated to be constructed in 2017.

ADJACENT SEWER SYSTEMS

There are several nearby sewer service systems that are adjacent to the City's sewer service area. The following list includes the nearby wastewater systems.

- City of Bellevue
- City of Redmond
- Northshore Utility District (which provides sewer service to portions of the Cities of Bothell, Kenmore, and Kirkland)
- Woodinville Water District (which provides sewer service to portions of the Cities of Bothell, Kirkland, and Woodinville, and unincorporated King County)

City of Bellevue

Bellevue is adjacent to the City's sewer service area along the southern boundary. All areas along this boundary are sewered except for the Yarrow Bay Wetlands located near Points Drive and Watershed Park near NE 41st Drive. The City discharges into Bellevue's facilities at three locations: near 116th Avenue NE and NE 39th Street; near Points Drive NE just east of 96th Avenue NE; and near

the intersection of NE 41st Drive and 108th Avenue NE near Watershed Park. These Bellevue facilities ultimately transport the wastewater to the County's facilities. Bellevue discharges into the City's facilities at two locations: along NE Points Drive near 103rd Place NE; and along Northup Way just east of 108th Avenue NE. These City facilities ultimately transport the wastewater to the County's Yarrow Bay Lift Station. The agreements between Bellevue and the City are included in **Appendix B**.

City of Redmond

Redmond is adjacent to the City's sewer service boundary along 132nd Avenue NE. Any extensions adjacent to and along this sewer boundary are coordinated between Redmond and the City. There are currently no connections along this boundary.

Where the City's and Redmond's sewer service areas border each other along 132nd Avenue NE, the City and Redmond are currently discussing an agreement to serve the adjacent sewer system where it is appropriate. The goal of this agreement is to eliminate parallel sewer mains, reduce sewer improvement and maintenance costs, and provide sewer service without installing lift stations where feasible.

Northshore Utility District

In general, Northshore's service area is north of NE 116th Street. The City discharges to Northshore's facilities at two locations: near NE 124th Street and 116th Avenue NE; and near the intersection of NE 116th Street and 100th Avenue NE. These facilities ultimately transport the wastewater to the adjacent County facilities. Existing agreements between Northshore and the City are included in **Appendix B**.

At the time this GSP was being drafted, the City and Northshore were working on a mutual agreement to have Northshore assume ownership of the NE 124th Street sewer drainage basin. This agreement was completed in 2017. Minor Sewer Drainage Basin No. 32 (**Figure 2-4**) was the only basin transferred to Northshore as part of this agreement.

Woodinville Water District

Woodinville Water District (WWD) provides water and sewer service to customers in portions of the northeastern section of the City limits. WWD provides sewer service to approximately 126 residential homes and 1 commercial account, and water service to approximately 1,961 residences in the City, according to WWD. Northshore provides sewer service to the City's residents that are located between WWD and the City's sewer service areas. There are currently no connections between WWD and the City's sewer systems and no plans in the near future to connect the two sewer systems.

King County

The County owns, operates, and maintains three lift stations along the western edge of the City limits. The County also owns associated gravity and collection piping within the City's sewer service boundary and the Eastside Interceptor (72 to 84 inches) located along the Cross Kirkland Corridor. The County's Kirkland Lift Station, which was rebuilt in 2014 (**Figure 2-4**), serves a majority of the City's downtown area and is located near the intersection of 3rd Street and Park Lane. The County's

Yarrow Bay Lift Station serves the southwest portion of the wastewater collection system and is located adjacent to Lake Washington Boulevard near Yarrow Bay. The County's Juanita Lift Station serves the northwest portion of the wastewater collection system and is located adjacent to the intersection of NE Juanita Drive and 93rd Avenue NE.

CITY OF KIRKLAND WATER SYSTEM

City of Kirkland

The City provides water service to customers throughout its corporate limits, except for the Finn Hill, North Juanita, and Kingsgate neighborhoods that were annexed in 2011. The neighborhoods that were annexed by the City in 2011 are served by Northshore and WWD. With the 2013 Totem Valley assumption, the City also serves a small area outside of the City limits in the County in the northeast corner of the water service area. The City's existing water service area boundary encompasses approximately 9.8 square miles. Redmond provides water service to customers generally east of 132nd Avenue NE, and Bellevue serves customers to the south of the City.

This section provides a brief description of the existing water system and the current operation of the facilities. The water service area and system facilities are shown in **Figure 2-6**.

None of the City's wastewater facilities are located adjacent to major drinking water facilities for the City or adjacent drinking water purveyors. As a result of this separation, the City's wastewater facilities are unlikely to conflict with or impact the drinking water facilities or supplies for the City or neighboring purveyors.

Pressure Zones

The City serves customers within an elevation range of approximately 20 feet near the shores of Lake Washington to approximately 500 feet in the Bridle Trails area. The wide elevation range requires that the water pressure be increased or reduced to maintain pressures that are safe and sufficient to meet the flow requirements of the system.

Supply Facilities

Introduction

All water in the City's system is currently supplied by the City of Seattle (Seattle) supply system from its Tolt and Cedar River supply pipelines. The City is primarily served with water that originates from the Tolt River System but will on occasion receive water from the Cedar River system. Water supplied to the City from the Cedar River source is expected only during emergency or routine maintenance periods. Water from these sources is delivered to the City in a 48-inch transmission main routed along 132nd Avenue NE. Water is provided to the City's system from this transmission main through three active joint-use facility supply stations.

The City is not aware of any active public springs or wells within the City limits. However, there are a number of private wells adjacent to the City's sewer service area, as shown in **Figure 2-6**.

Water Treatment

All water treatment is currently provided by Seattle. Currently, water treatment for the Tolt River supply includes screening, ozonation, coagulation and flocculation, filtration, chlorination, fluoridation, and corrosion control. The Cedar River supply currently is treated through screening, fluoridation, corrosion control, and disinfection with chlorine. Ozonation and ultraviolet light treatment were added to the Cedar River Treatment Plant in 2004.

Pump Station Facilities

The City's water system has two booster pump station facilities that provide supply to the 545 and 650 Zones. A summary of the pumping facilities is shown in **Table 2-4** from the City's *Comprehensive Water System Plan*.

Table 2-4
Booster Pump Station Facilities Summary

Pump Station	Suction Pressure Zone	Discharge Pressure Zone	Year Constructed	Existing Pumping Capacity	Number of Pumps	Pump Type	Pump Motor Size (hp)	Kirkland Ownership Percentage
650 Zone BPS	545	650	2004	5,250	6	Centrifugal	(4) 75, (2) 25	86.0%
545 Zone BPS	450	545	1991	2,500	1	Vertical Turbine	30	66.0%

Storage Facilities

The City's water system has two storage facilities that provide storage to the 450 and 545 Zones. A summary of the storage facilities is shown in **Table 2-5** from the City's *Comprehensive Water System Plan*.

Table 2-5
Storage Facilities Summary

Reservoir	Location	Pressure Zone	Year Constructed	Material	Capacity (MG)	Diameter (feet)	Base Elevation (feet)	Overflow Elevation (feet)	Kirkland Ownership Percentage
South Reservoir	13013 NE 65th Street	545	1971	Steel	11.2	195	495.08	545.08	57.2%
North Reservoir	10733 132nd Ave NE	450	1994	Steel	14.3	154	347.08	450.08	66.0%

Distribution and Transmission System

The City's water system contains more than 170 linear miles of water main ranging in size from 2 inches to 24 inches. Most of the water main (approximately 54 percent) within the service area is 8 inches in diameter, and an additional 24 percent of the water main is 10 inches in diameter or larger.

All the water main in the City's system is constructed of either asbestos cement, steel, cast iron, concrete, polyvinyl chloride (PVC), galvanized iron, and ductile iron, with 63 percent of the system constructed of ductile iron pipe. All new water main installations are required to use ductile iron pipe in accordance with the City's development and construction standards. Per industry standard, the life expectancy of water main is generally 50 years. At least 24 percent of water main within the system is at least 40 years old and is reaching or has reached its projected life expectancy. The

majority of this older water main is asbestos cement or cast iron. The remainder of the water main in the City's water system is primarily 30 years old or less and is generally in good condition.

Water System Interties

Water system interties are physical connections between two adjacent water systems. Interties are normally separated by a closed isolation valve or control valve. Emergency supply interties provide water from one system to another during emergency situations only. An emergency situation may occur when a water system loses its main source of supply or a major transmission main, or during firefighting situations, and is unable to provide a sufficient quantity of water to its customers. Normal supply interties provide water from one system to another during non-emergency situations and are typically supplying water at all times.

Emergency Supply Interties

The City's water system has two emergency interties with Bellevue. One intertie with Bellevue is at approximately NE Northup Way and 104th Avenue NE. The second intertie with Bellevue is at the intersection of 132nd Avenue NE and NE 60th Street.

The City also has two existing emergency interties with Northshore in the Totem Lake area. One intertie is located at the NE Totem Lake Way dead end. The second intertie is located at approximately NE 118th Street and 115th Avenue NE.

THIS PAGE INTENTIONALLY LEFT BLANK

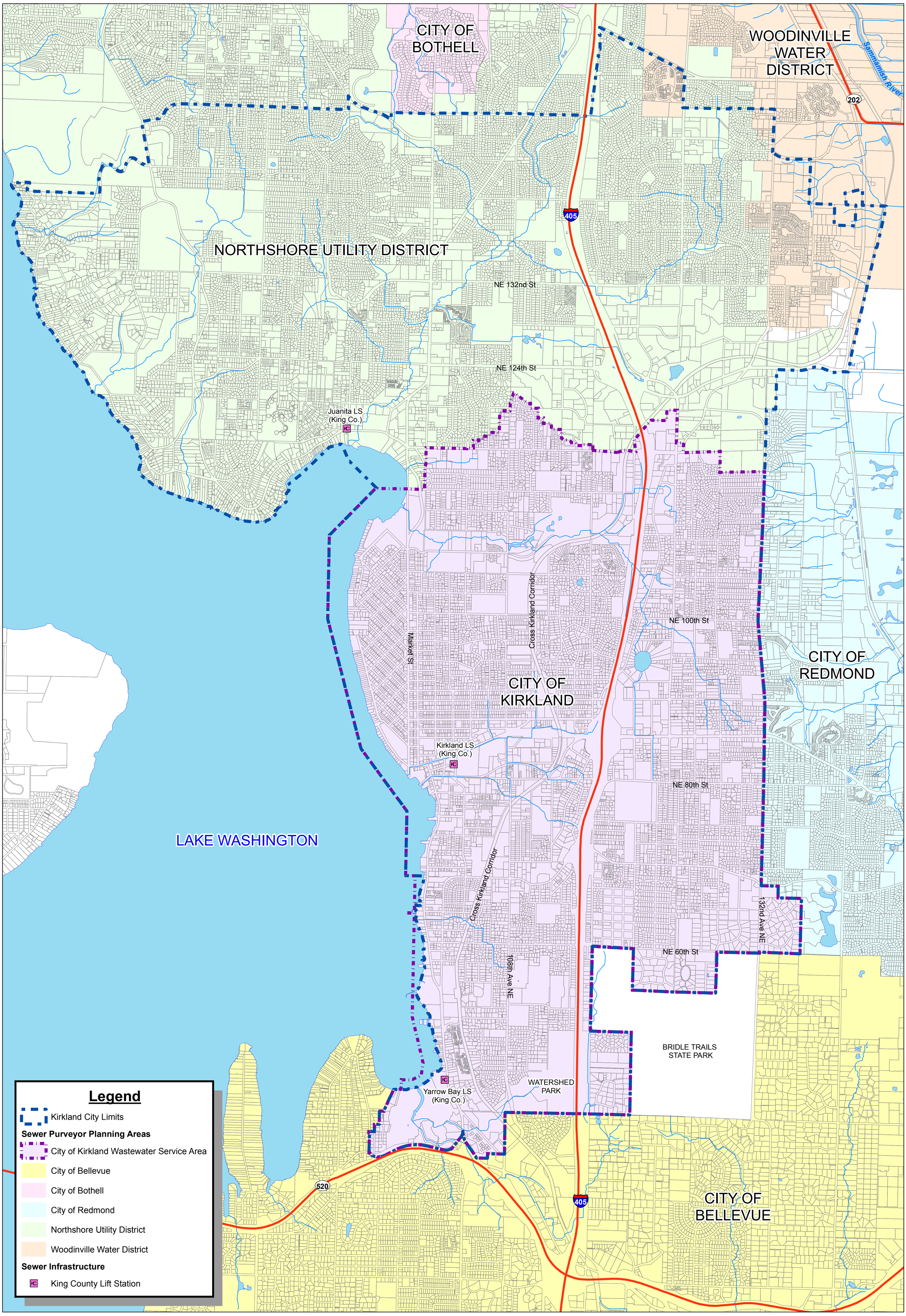

COORDINATE SYSTEM: NAD 1983 HARN STATEPLANE WASHINGTON NORTH FIPS 4601 FEET

RH2 ENGINEERING

NORTH

1 inch = 1,400 feet

0 700 1,400 2,800 Feet

DRAWING IS FULL SCALE WHEN BAR MEASURES 2"

CITY OF KIRKLAND WASHINGTON

Figure 2-1
Sewer Service Area
City of Kirkland General Sewer Plan

Vicinity Map

This map is a graphic representation derived from the City of Kirkland Geographic Information System. It was designed and intended for City of Kirkland staff use only; it is not guaranteed to survey accuracy. This map is based on the best information available on the date shown on this map.

Any reproduction or sale of this map, or portions thereof, is prohibited without express written authorization by the City of Kirkland.

This material is owned and copyrighted by the City of Kirkland.

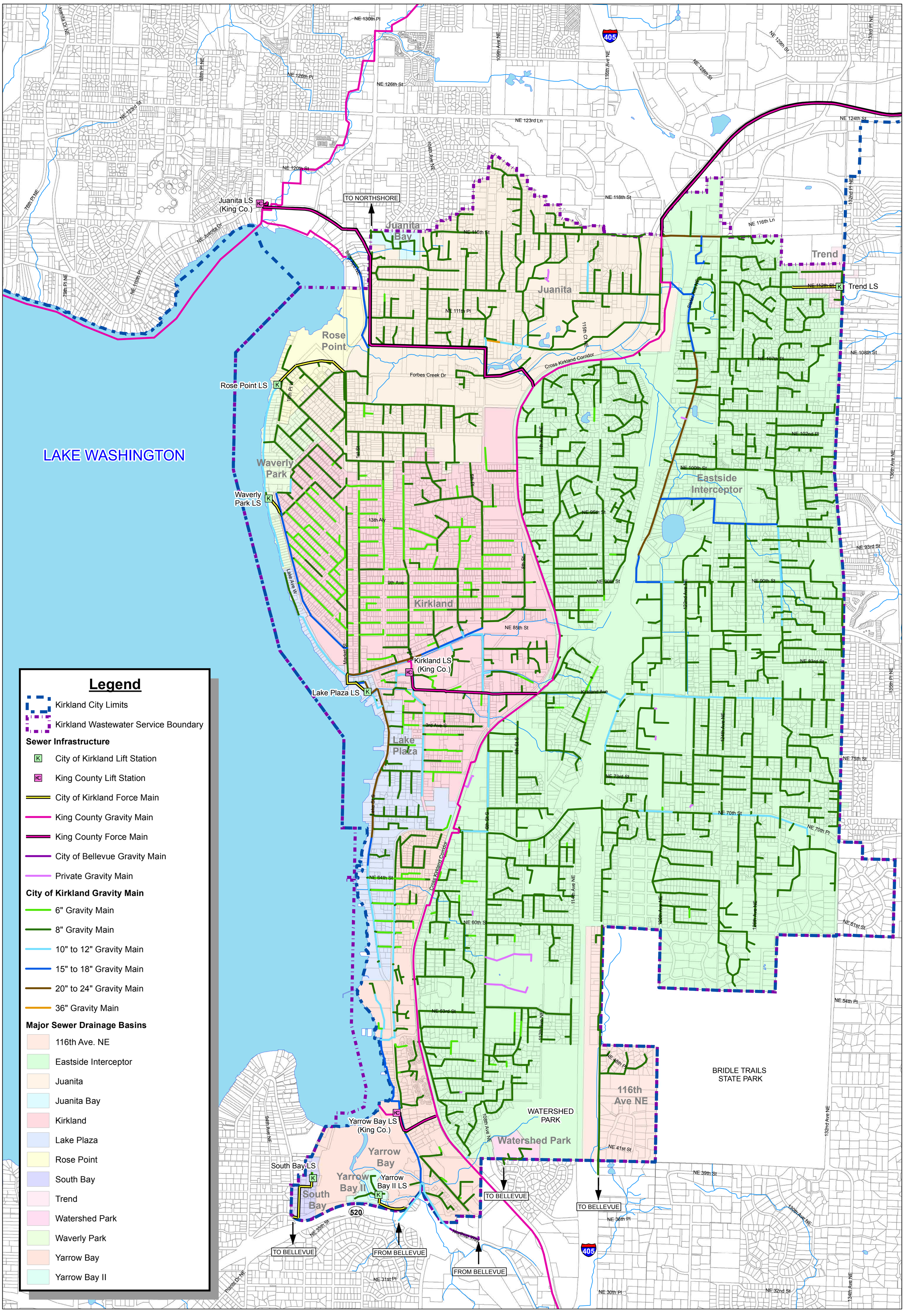

COORDINATE SYSTEM: NAD 1983 HARN STATEPLANE WASHINGTON NORTH FIPS 4601 FEET

RH2

NORTH

1 inch = 1,000 feet

0 500 1,000 2,000 Feet

DRAWING IS FULL SCALE WHEN BAR MEASURES 2"

CITY OF KIRKLAND WASHINGTON

Figure 2-2
Existing Sewer System
City of Kirkland General Sewer Plan

Vicinity Map

This map is a graphic representation derived from the City of Kirkland Geographic Information System. It was designed and intended for City of Kirkland staff use only; it is not guaranteed to survey accuracy. This map is based on the best information available on the date shown on this map.

Any reproduction or sale of this map, or portions thereof, is prohibited without express written authorization by the City of Kirkland.

This material is owned and copyrighted by the City of Kirkland.

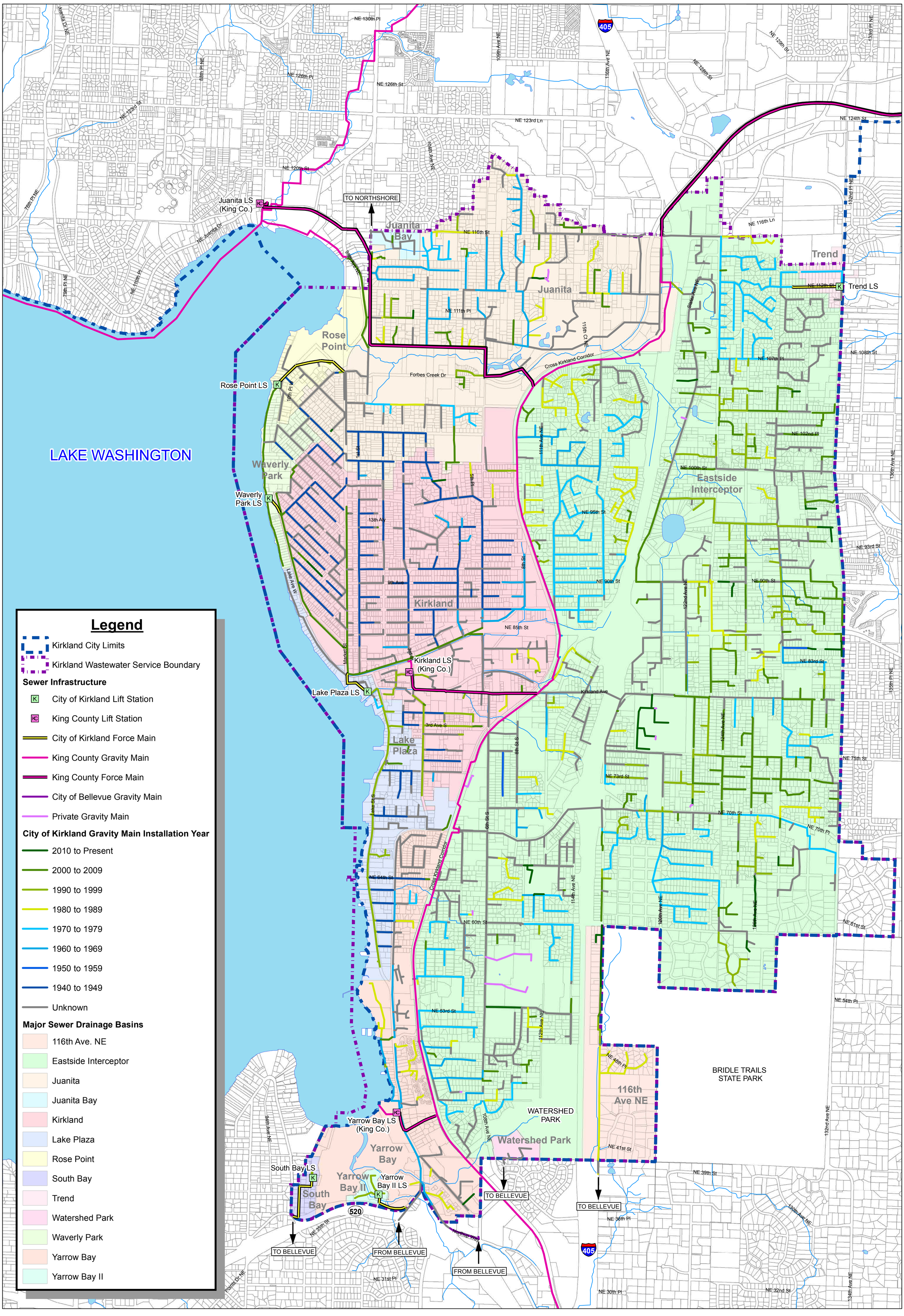

COORDINATE SYSTEM: NAD 1983 HARN STATEPLANE WASHINGTON NORTH FIPS 4601 FEET

RH2

NORTH

1 inch = 1,000 feet

0 500 1,000 2,000 Feet

DRAWING IS FULL SCALE WHEN BAR MEASURES 2"

CITY OF KIRKLAND WASHINGTON

Figure 2-3A
Existing Sewer Main Age
City of Kirkland General Sewer Plan

Vicinity Map

This map is a graphic representation derived from the City of Kirkland Geographic Information System. It was designed and intended for City of Kirkland staff use only; it is not guaranteed to survey accuracy. This map is based on the best information available on the date shown on this map.

Any reproduction or sale of this map, or portions thereof, is prohibited without express written authorization by the City of Kirkland.

This material is owned and copyrighted by the City of Kirkland.

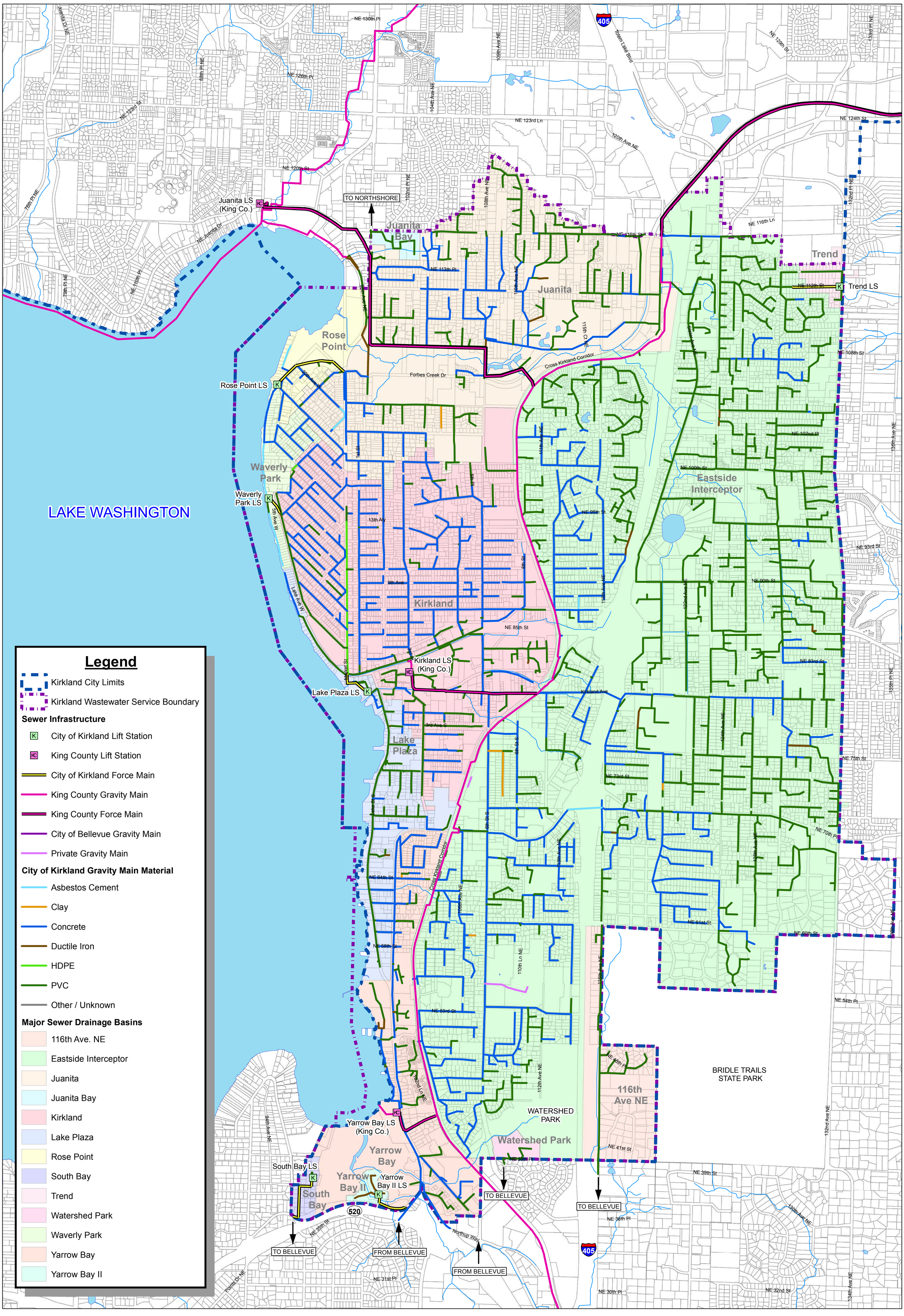

COORDINATE SYSTEM: NAD 1983 HARN STATEPLANE WASHINGTON NORTH FIPS 4601 FEET

RH2

NORTH

1 inch = 1,000 feet

0 500 1,000 2,000 Feet

DRAWING IS FULL SCALE WHEN BAR MEASURES 2"

CITY OF KIRKLAND WASHINGTON

Figure 2-3B
Existing Sewer Main Material
City of Kirkland General Sewer Plan

Vicinity Map

This map is a graphic representation derived from the City of Kirkland Geographic Information System. It was designed and intended for City of Kirkland staff use only; it is not guaranteed to survey accuracy. This map is based on the best information available on the date shown on this map.

Any reproduction or sale of this map, or portions thereof, is prohibited without express written authorization by the City of Kirkland.

This material is owned and copyrighted by the City of Kirkland.

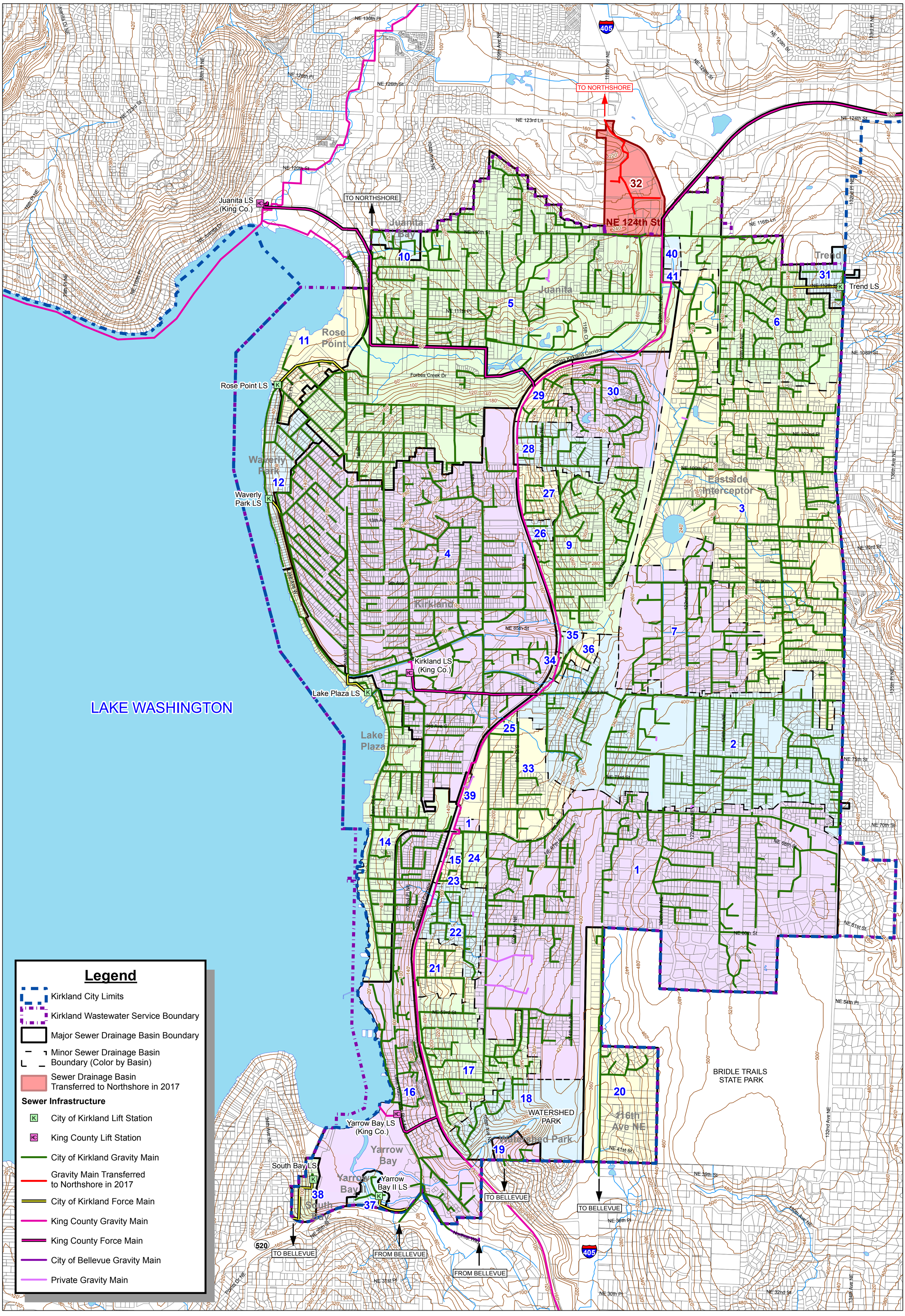

COORDINATE SYSTEM: NAD 1983 HARN STATEPLANE WASHINGTON NORTH FIPS 4601 FEET

RH2 ENGINEERING

NORTH

1 inch = 1,000 feet

0 500 1,000 2,000 Feet

DRAWING IS FULL SCALE WHEN BAR MEASURES 2"

CITY OF KIRKLAND WASHINGTON

Figure 2-4
Minor Sewer Drainage Basins
City of Kirkland General Sewer Plan

Vicinity Map

This map is a graphic representation derived from the City of Kirkland Geographic Information System. It was designed and intended for City of Kirkland staff use only; it is not guaranteed to survey accuracy. This map is based on the best information available on the date shown on this map.

Any reproduction or sale of this map, or portions thereof, is prohibited without express written authorization by the City of Kirkland.

This material is owned and copyrighted by the City of Kirkland.

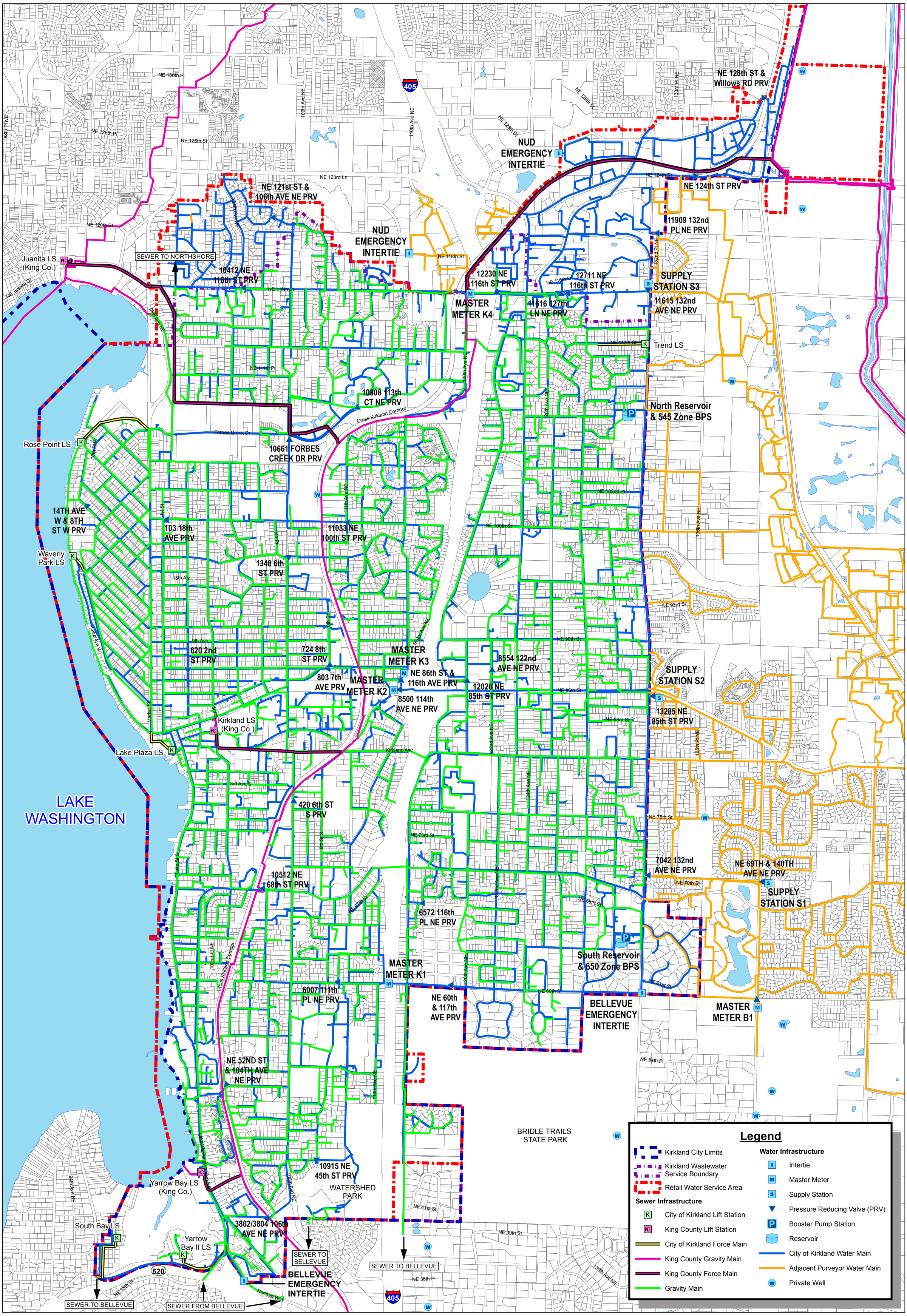

COORDINATE SYSTEM: NAD 1983 HARN STATEPLANE WASHINGTON NORTH FIPS 4601 FEET

RH2 ENGINEERING

NORTH

1 inch = 1,000 feet

0 500 1,000 2,000 Feet

DRAWING IS FULL SCALE WHEN BAR MEASURES 2"

CITY OF KIRKLAND WASHINGTON

Figure 2-6
Existing Water and Sewer Systems
City of Kirkland
General Sewer Plan

Vicinity Map

This map is a graphic representation derived from the City of Kirkland Geographic Information System. It was designed and intended for City of Kirkland staff use only; it is not guaranteed to survey accuracy. This map is based on the best information available on the date shown on this map.

Any reproduction or sale of this map, or portions thereof, is prohibited without express written authorization by the City of Kirkland.

This material is owned and copyrighted by the City of Kirkland.

Land Use and Population

3

INTRODUCTION

The City of Kirkland's (City) *Comprehensive Plan* was originally prepared in 1977 and was last updated in 2015. The *Comprehensive Plan* underwent a major revision in 1995 to meet the requirements of the State of Washington Growth Management Act (GMA) and again in 2004 to meet updated requirements of GMA legislation. The City annually updates its *Comprehensive Plan* to ensure that it reflects the current issues of the City. The GMA requires, among other things, consistency between land use and utility plans and their implementation. This chapter demonstrates the compatibility of the General Sewer Plan (GSP) with other plans; identifies the designated land uses within the existing and future service area; and presents population projections within the City's planning area.

COMPATIBILITY WITH OTHER PLANS

Introduction

To ensure that this GSP is consistent with the land use policies that guide it and other related plans, the following planning documents were examined.

- Growth Management Act
- City of Kirkland *Comprehensive Plan*
- King County *Comprehensive Plan*
- King County *Countywide Planning Policies*
- King County *Regional Wastewater Services Plan*
- City of Bellevue *Wastewater System Plan*
- City of Redmond *General Sewer Plan*
- Northshore Utility District *Wastewater Comprehensive Plan*

Growth Management Act

The State of Washington GMA of 1990 (and its multiple amendments) defined four goals relevant to this GSP:

1. Growth should be in urban areas;
2. There should be consistency between land use and utility plans and their implementation;
3. There should be concurrency of growth with public facilities and services; and
4. Critical areas should be designated and protected.

Urban Growth Area

The GMA requires that King County (County) and the City cooperate in designating an Urban Growth Area (UGA). As part of the development of its 1995 *Comprehensive Plan*, the City designated a UGA and planned for the population (determined by the number of new housing units) and employment growth targets established by the County Growth Management Planning Council. In

2011, the City annexed its designated UGA and no longer has a planning area beyond the City's corporate limits.

Consistency

The GMA requires planning consistency from two perspectives. First, it requires consistency of plans among jurisdictions. This means that plans and policies of the City and County must be consistent per the Revised Code of Washington (RCW) 36.70A.100. Second, the GMA requires the implementation of the plan be consistent with the comprehensive plans (RCW 36.70A.120).

The City has several interlocal agreements with the Cities of Redmond (Redmond) and Bellevue (Bellevue), Northshore Utility District (Northshore), and the County. The GSP must be consistent with these agencies planning documents; therefore, the sewer planning documents for these agencies have been reviewed for consistency with this GSP.

Concurrency

Concurrency means that adequate public facilities and services are provided at the time growth occurs. For example, growth should not occur where schools, roads, and other public facilities are overloaded. To achieve this objective, the GMA directs growth to areas already served or readily served by public facilities and services (RCW 36.70A.110). It also requires that when public facilities and services cannot be maintained at an acceptable level of service, new development should be prohibited (RCW 36.70A.110).

Critical Areas

The GMA requires that critical areas be designated and protected. Critical areas include fish and wildlife habitat, flood zones, aquifer recharge areas, streams, creeks, rivers, lakes, wetlands and other surface water, and geologic hazard areas, such as steep slopes and liquefaction zones. The State Environmental Policy Act (SEPA) Checklist in **Appendix C** addresses other environmental concerns.

City of Kirkland Comprehensive Plan

The City's *Comprehensive Plan* establishes a vision, goals and policies, and implementation strategies for managing growth. The City's *Comprehensive Plan* recently underwent a significant update which was adopted in 2015. The 2015 *Comprehensive Plan* is the vision for the City from 2015 through 2035.

The Land Use Element of the City's *Comprehensive Plan* is the City's vision of how growth and development should occur over a 20-year horizon. While the Land Use Element goals and policies set forth general standards for locating land uses, the Land Use Map, which has been reproduced and is shown in **Figure 3-1**, indicates geographically where certain types of uses may be appropriate. The Land Use Element articulates many of the same goals and concerns of the GMA. Like the GMA, the Land Use Element seeks to accommodate population and employment growth while maintaining the City's residential character and protecting environmentally sensitive areas. It seeks to promote a strong local economy and vital commercial and industrial districts by focusing economic development within them and establishing development regulations. The utilities, public services, and capital facilities elements ensure that new development will be adequately serviced without compromising existing levels of service, similar to the principal of concurrency as defined in the

GMA. The City's GSP is reviewed and taken into consideration during the development of and subsequent revisions to the Utilities and Capital Facilities Elements of the Comprehensive Plan.

Since the 2011 *Comprehensive Plan*, the City has annexed several surrounding areas and increased its size to approximately 11,700 acres, or 18.2 square miles. The City annexed the Bridleview neighborhood, which only included lots on septic systems. The annexation of the City's UGA, which included the Finn Hill, North Juanita, and Kingsgate neighborhoods, with approximately 31,000 people, increased the City's population to approximately 81,480 in 2012. Although the area of the City and the associated population increased with this annexation, Northshore continues to provide sewer service to the annexation area; therefore, the City's sewer service area did not expand with these annexations.

Some undeveloped lots still exist throughout the City limits, and infilling is expected and encouraged in these areas. The City will be capable of accommodating housing and employment growth projections of 8,361 residential units and employment of 22,435 jobs within the City limits by 2035, according to the land capacity analysis prepared for the 2015 *Comprehensive Plan*. The future Totem Lake Urban Center is expected to be the major growth center and is currently served by Northshore.

King County Comprehensive Plan

The County's *Comprehensive Plan,* which was lasted updated in December 2016, provides a legal framework for managing growth and making decisions regarding land use in unincorporated King County. The wastewater collected within the City's sewer service area is conveyed to the County's Eastside Interceptor and South Treatment Plant for treatment (see **Chapter 2** for additional information).

King County Countywide Planning Policies

The County Council adopted the *Countywide Planning Policies* (CPPs) in July 1992. The policies have been amended several times since, with the last amendment occurring in December 2012. The CPPs serve as the framework for the County's and cities' own comprehensive plans, including the City's *Comprehensive Plan*. Consistent with the GMA's goals, the CPPs establish UGAs within the County to encourage growth in urban areas. The CPPs also guide development in rural, unincorporated King County. Similar to the City's *Comprehensive Plan*, the County's policy goals seek to reduce urban sprawl, protect rural areas, provide affordable housing throughout the County, and coordinate protection of environmentally sensitive areas.

King County Regional Wastewater Services Plan

The County's Regional Wastewater Services Plan (RWSP) was developed based on input from citizens, stakeholders, and the County's Regional Water Quality Committee and adopted in November 1999. The RWSP has been amended serval times since it was adopted and was last updated in May 2013.

The purpose of the RWSP is to protect public health and the environment by conveying wastewater, treating wastewater, reclaiming wastewater, and recycling biosolids for residents in the County's wastewater service area. Among its many objectives, he RWSP aims to meet these goals while meeting regulatory requirements and maximizing the public's existing investment in the wastewater system.

City of Bellevue Wastewater System Plan

Bellevue is adjacent to the City's sewer service area along the southern boundary. The City discharges into Bellevue's facilities at three locations: near 116th Avenue NE and NE 39th Street; at the cul-de-sac on NE 39th Place just north of 111th Avenue NE; and on Points Drive NE just east of 92nd Avenue NE. These Bellevue facilities ultimately transport the wastewater to the County's facilities. Bellevue discharges into the City's facilities at two locations: along NE Points Drive near 103rd Place NE; and along Northup Way just east of 108th Avenue NE. These City facilities ultimately transport the wastewater to the County's Yarrow Bay Lift Station. The agreements between Bellevue and the City are included in **Appendix B**.

City of Redmond General Sewer Plan

Redmond is adjacent to the City's sewer service boundary along 132nd Avenue NE. Any extensions adjacent to and along this sewer boundary are coordinated between Redmond and the City.

Northshore Utility District Wastewater Comprehensive Plan

Northshore serves some areas within the City from NE 145th Street south to the Northshore corporate boundary. The City currently discharges to Northshore's facilities at one location near the intersection of NE 116th Street and 100th Avenue NE. The City used to discharge to Northshore's facilities at another location (near NE 124th Street and 116th Avenue NE) as well, but this area was transferred to Northshore in 2017, as discussed in **Chapter 2**. These Northshore facilities ultimately transport the wastewater to the adjacent County facilities. Existing agreements between Northshore and the City are included in **Appendix B**.

LAND USE

The City limits currently encompass an area of approximately 11,700 acres, as shown in **Figure 2-1**. The City's sewer service area, at approximately 5,630 total acres, is considerably smaller than the City limits. Northshore provides a majority of the sewer service in the northern portion of the City limits.

The City's land use designations, as shown in the Land Use Map on **Figure 3-1**, guide City development. **Figure 3-1** represents the future land uses in the City, with the exception of future changes in land use as a result of City-initiated neighborhood plan updates and private citizen requests.

The area served by the City is a mix of residential and commercial uses, comprised largely of single-family residents, as shown on **Figure 3-1** and **Table 3-1**. Approximately 64 percent of the land area within the sewer service area is currently designated for single-family residential use (or low density residential); approximately 10 percent is designated for multi-family residential use (or medium/high density residential); approximately 11 percent is designated for park or open space use; approximately 7 percent is designated for commercial use; approximately 5 percent is designated for office commercial use; approximately 2 percent is designated for industrial use; approximately 1 percent is designated for institutional use; and less than 1 percent is designated for transit oriented development. Multi-family residential, commercial, and industrial development is concentrated in several areas throughout the City, primarily along Interstate 405 and Lake Washington.

Table 3-1
Land Use Designations

Land Use Type	Existing Sewer Service Area
Single-family Residential (Low Density Residential)	64.2%
Multi-family Residential (Medium/High Density Residential)	10.4%
Park/Open Space	10.7%
Commercial	6.8%
Office Commercial	4.5%
Industrial	2.2%
Institutions	1.1%
Transit Oriented Development	0.1%
Total	**100.0%**

POPULATION

Household Trends

The City is primarily residential, comprised of a nearly even split of single-family and multi-family residents. In 2010, approximately 50 percent of the residential units were single-family, and 50 percent were multi-family. Between 2000 and 2010, the City experienced a 9 percent increase in multi-family housing units and an 8 percent increase in single-family housing units. The City's trend toward developing more multi-family units than single-family units and mixed-use development is expected to continue through buildout.

The average household size in the City for 2008 through 2014 was 2.15 persons per household. The average household size in all the County was 2.39 persons per household. The lower average household size in the City reflects the higher percentage of multi-family homes in the City's community.

For the City, the average household size for owner-occupied units in 2014 was 2.3, and the average household size for renter-occupied units was 1.94.

The following household sizes were provided by the City's subconsultant, BERK, Inc., for the 2015 to 2035 projections.

- Average household size = 2.04
- Single-family household size = 2.73
- Multi-family household size = 1.83

The average household size of 2.04 was used for this GSP update for the 2015 to 2035 projections, which is a weighted average that is based on more future multi-family growth.

Existing and Future Population

The County has continued to experience steady population growth and additional physical developments in recent years. The population of East King County increased by more than 15 percent from 2000 to 2009. The population of the City increased approximately 8 percent during the same period. Because the City is already highly developed, population growth since 2010 is largely due to redevelopment, which explains the lower growth rate compared to the County as a whole. Prior to this, the City's population steadily increased as new areas were annexed and development occurred. **Table 3-2** illustrates the historical population growth since 1910. The Bridleview annexation of 2009, and the Finn Hill, North Juanita, and Kingsgate annexations of 2011 are included as of 2012. The Washington State Office of Financial Management (OFM) reported the City's population in 2014, with the annexations, was 82,590 people.

Table 3-2
Population Trends within City Limits

Year	Population[1]
Historical	
1910	532
1920	1,354
1930	1,714
1940	2,048
1950	4,713
1960	6,025
1970	15,070
1980	18,785
1990	40,052
2000	45,054
2010	48,787
2011	49,020
2012	81,480
2013	81,730
2014	82,590

NOTE:
1. The historical population represents the population within the City limits per OFM data. The 2010 and 2011 populations do not reflect the annexations of Bridleview (2009) or Finn Hill, North Juanita, and Kingsgate (2011). Annexation populations are included in 2012 through 2014.

The historical population data shown in **Table 3-2** represents the population within the established City limits for each year. The recent 2009 and 2011 annexations are included in the population data as of 2012.

The population projections shown in **Table 3-3** represent the City's growth target for new housing units based on the City's Planning Department projections on future growth trends and household size, the County's Growth Management Planning Council under the authority of the GMA, and the County's CPPs.

Table 3-3
Population Projections

Year	City Population	Sewer Service Area Population[1,2]	Commercial Connections
2014 (Existing)	82,590	29,481	608
2021 (+6 years)	87,260	32,141	699
2025 (+10 years)	89,793	34,095	757
2035 (+20 years)	95,913	38,981	902

NOTES:
1. Existing multi-family residential population in the sewer service area estimated based on average single-family residential winter water consumption per connection and total multi-family residential winter water consumption.
2. Projected sewer service area population includes an estimated 34 septic system conversions per year.

The existing sewer service area population, shown in **Table 3-3**, was calculated by using the total number of existing single-family and multi-family housing units and the average household size in the City for 2008 through 2014 of 2.15 persons per household). The existing number of multi-family housing units served by the City's sewer system was estimated based on average single-family residential winter water consumption per connection and total multi-family residential winter water consumption, discussed further in **Chapter 4**.

The existing and projected future single-family and multi-family housing units for each of the City's Traffic Analysis Zones (TAZ), shown in **Figure 3-2**, and development projects, currently under permit review or undergoing construction, were used to determine the projected future sewer service area populations and locations. The number of projected future housing units from the TAZs, combined with the projected average household size of 2.04 persons per household, determined the projected future sewer service area population. In addition, City staff provided the planning-level estimate of septic system connections per year based on historical data (**Appendix D**). This is included in the estimated sewer service area population. **Table 3-3** shows the projected future population growth of the City and the City's sewer service area. The City's population is expected to increase by 9.9 percent between 2021 and 2035, which translates to an average annual growth rate of approximately 0.7 percent.

The existing and projected future employees for each of the City's Traffic Analysis Zones (TAZ), shown in **Figure 3-2**, and development projects, currently under permit review or undergoing construction, were used to determine the projected future sewer service area employees, commercial connections (**Table 3-3**), and locations.

These population and employee projections, along with the historical wastewater flow and average winter water consumption data presented in **Chapter 4**, form the basis for determining the future needs of the City's sewer system. This analysis and the results are presented in **Chapter 4**.

At the time this GSP was being drafted, the City and Northshore were working on a mutual agreement to have Northshore assume ownership of the NE 124th Street sewer drainage basin. For the purposes of this GSP, the NE 124th Street sewer drainage basin was included in the City's sewer service area for all projections.

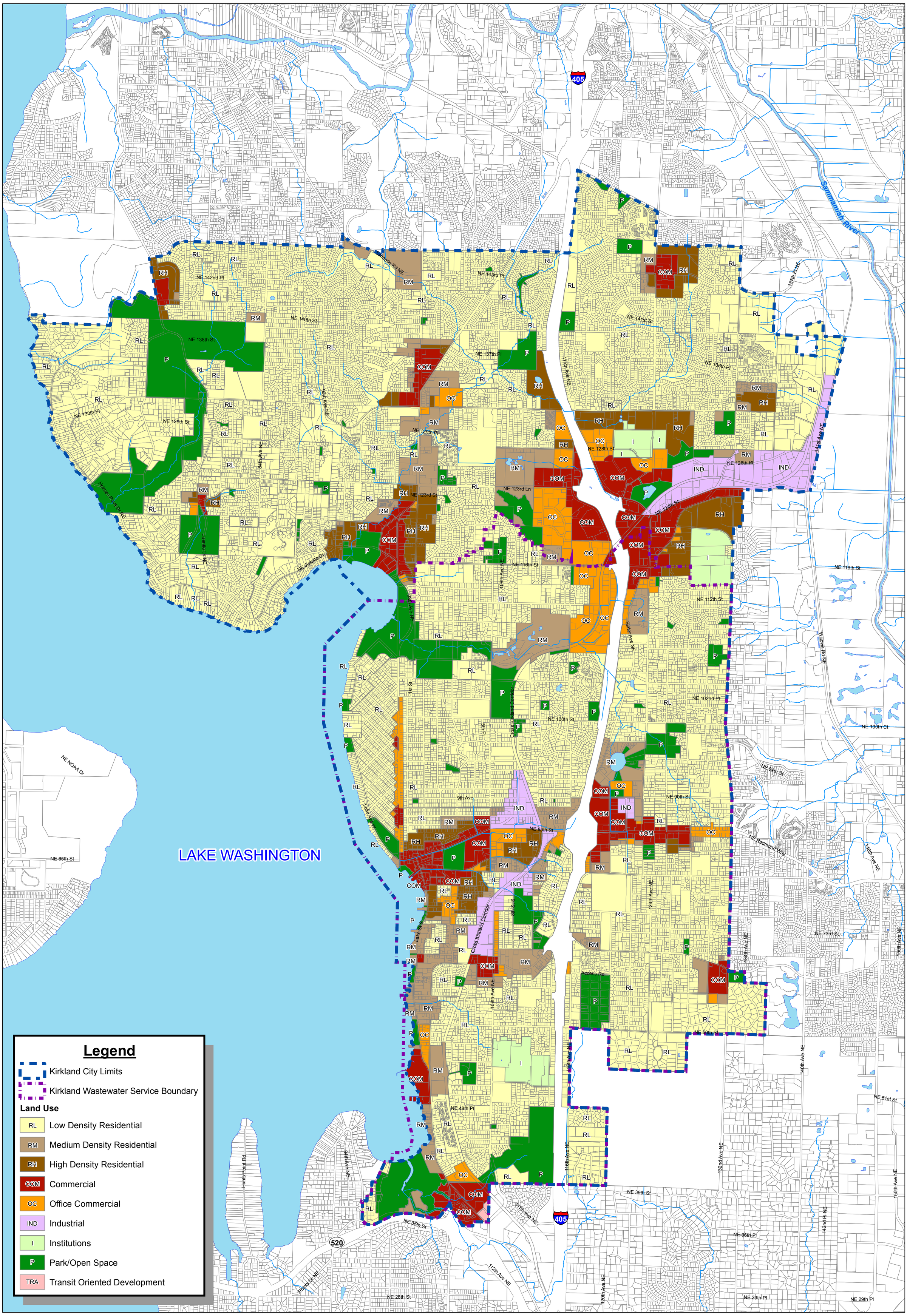

COORDINATE SYSTEM: NAD 1983 HARN STATEPLANE WASHINGTON NORTH FIPS 4601 FEET

RH2 ENGINEERING

NORTH

1 inch = 1,500 feet

0 750 1,500 3,000 Feet

DRAWING IS FULL SCALE WHEN BAR MEASURES 2"

CITY OF KIRKLAND WASHINGTON

Figure 3-1
Land Use
City of Kirkland General Sewer Plan

Vicinity Map

This map is a graphic representation derived from the City of Kirkland Geographic Information System. It was designed and intended for City of Kirkland staff use only; it is not guaranteed to survey accuracy. This map is based on the best information available on the date shown on this map.

Any reproduction or sale of this map, or portions thereof, is prohibited without express written authorization by the City of Kirkland.

This material is owned and copyrighted by the City of Kirkland.

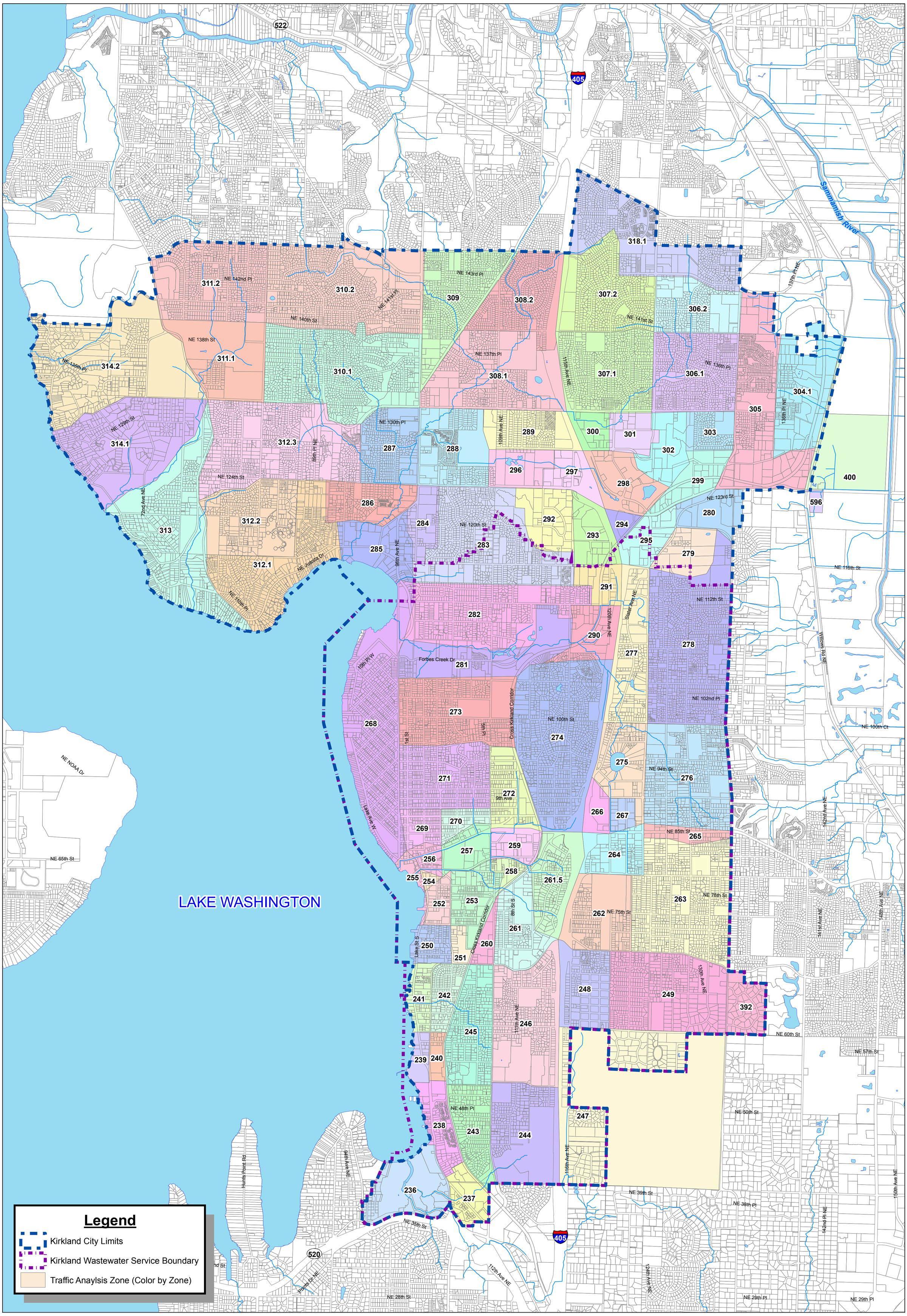

COORDINATE SYSTEM: NAD 1983 HARN STATEPLANE WASHINGTON NORTH FIPS 4601 FEET

RH2 ENGINEERING

NORTH

1 inch = 1,500 feet

0 750 1,500 3,000 Feet

DRAWING IS FULL SCALE WHEN BAR MEASURES 2"

CITY OF KIRKLAND WASHINGTON

Figure 3-2
Traffic Analysis Zones
City of Kirkland General Sewer Plan

Vicinity Map

This map is a graphic representation derived from the City of Kirkland Geographic Information System. It was designed and intended for City of Kirkland staff use only; it is not guaranteed to survey accuracy. This map is based on the best information available on the date shown on this map.

Any reproduction or sale of this map, or portions thereof, is prohibited without express written authorization by the City of Kirkland.

This material is owned and copyrighted by the City of Kirkland.

Flow Analysis

4

INTRODUCTION

A detailed analysis of flow and loading is crucial to the planning efforts of a sewer service provider. When analyzing a sewer system, the first step is to identify current flows to determine if the existing system can provide adequate service to its existing customers under the most crucial conditions in accordance with federal and state laws. A future sewer system analysis identifies projected flow to determine where the system will need to be improved to satisfy future growth while continuing to meet federal and state laws.

Flows in a sewer system are used to determine the size of gravity collection piping, lift station facilities, and force main piping needed. Several different flow scenarios were analyzed for the City of Kirkland's (City) sewer system and are addressed in this chapter, including average annual flow, peak hour flow, and projected future flows. Existing and projected equivalent residential units (ERUs), existing and projected infiltration and inflow, and peaking factors are also presented.

EXISTING AND PROJECTED SEWER SERVICE POPULATION

King County Wastewater Treatment Division Flow Forecasts

The King County Wastewater Treatment Division (KCWTD) prepared an *Updated Planning Assumptions for Wastewater Flow Forecasting* document in July 2014. The purpose of this document was to update future flow forecasts to ensure that KCWTD's regional wastewater system keeps pace with growth and protects public health, the environment, and the economy. The KCWTD sewer model included information contained in the local agency sewer comprehensive plans in the KCWTD regional sewer service area, population and growth forecasts from the Puget Sound Regional Council (PSRC), flow and rainfall data, land use and topography, water consumption data, and planning assumptions. The KCWTD sewer models are calibrated approximately every 10 years, with the last update occurring in 2010.

As part of the update, KCWTD collected and reviewed indoor water consumption data for the major water purveyors in the KCWTD regional service area. Residential consumption was estimated to be 54 gallons per capita per day (gpcd), commercial was 18 gallons per employee per day (gped), and industrial was 45 to 56 gped for outside the Seattle area. A 10-percent reduction in water consumption was assumed between 2010 and 2030. KCWTD also assumed a 20 percent per decade conversion of septic users to municipal sewer systems.

In addition, KCWTD updated its model basin inflow and infiltration (I/I) rates based on flow data collected during the 2009 through 2011 Decennial Flow Monitoring. Peak hour I/I for new construction was adjusted to a rate of 2,000 gallons per acre per day (gpad), and peak hour I/I for existing and new construction was determined to increase at a degradation rate of 7 percent per decade.

The information contained in KCWTD's *Updated Planning Assumptions for Wastewater Flow Forecasting* document and determined from the 2009 through 2011 Decennial Flow Monitoring as part of the *Regional Inflow and Infiltration Program* was taken into consideration and used when there was a lack of City specific data, such as with I/I rates.

City of Kirkland Sewer Service Population

As presented in **Chapter 3**, the estimated population within the City limits was 82,590 in 2014, and the sewer service area population is estimated to be 29,481.

The sewer service population is based on a 2014 average household size of 2.15 for both single-family and multi-family households, based on data provided by the City's consultant, BERK, Inc. that is assisting with the City's 2015 *Comprehensive Plan*. The existing number of single-family housing units served by the City's sewer system was estimated based on the existing number of connections. The existing number of multi-family housing units served by the City's sewer system was estimated based on the average winter water consumption (AWWC) per single-family residential connection and the total multi-family residential AWWC. For the purposes of this General Sewer Plan (GSP), it was assumed that single-family and multi-family households have the same amount of AWWC. AWWC was used to determine the existing wastewater flows in the City's sewer system, which is described further in the **Existing Wastewater Flow** section.

The City's wastewater collection service area is considerably smaller than the City limits. Northshore Utility District provides a majority of the sewer service in the northern portion of the City limits. The City's wastewater service area is not expected to expand in the future, and the population increase in the City's wastewater service area will be attributed to redevelopment with higher densities and in-fill.

It is estimated that there are 785 parcels in the City's sewer service area that have a septic system. Once these systems fail, the City's code requires that the homeowners connect to the City's municipal wastewater system if the parcel is located within 330 feet of an existing sewer main. For planning-level purposes, it is estimated by City staff that approximately 34 parcels per year will convert from septic systems to connect to the City's sewer system, based on historical permitting data. This was included in the future sewer population projections.

As noted in **Chapter 3**, the City is planning for a 2035 City population of 95,913. The estimated sewer service area population in 2035 is anticipated to be 38,981, which is approximately 41 percent of the projected City population. In addition, the commercial connections are expected to increase from 608 in 2014 to 902 in 2035.

EXISTING WASTEWATER FLOW RATES

Existing wastewater flow rates were determined by compiling historical winter water consumption data for each connection currently being served by the City's sewer collection system. For billing purposes, the City calculates an AWWC value for each single-family residence connected to the sewer collection system. AWWC is defined as the average water consumption for each connection observed over the 7-month period between November 1st and May 31st. The AWWC was calculated for each sewer service connection using the City's methodology and used to determine the existing domestic average annual flow (AAF) in the City's sewer collection system. The AWWC provides a good estimate of wastewater flows under existing conditions since it can be assumed that nearly all of the water used is discharged into the wastewater system, as there is minimal, if any, irrigation that occurs between November 1st and May 31st. Although the City only utilizes AWWC values for determining sewer rates for single-family residential connections, this

GSP utilized AWWC flow rates for all sewer service connections to be consistent with estimating the domestic AAFs.

The City's methodology for calculating AWWC incorporates water consumption data over a 7-month period; however, water consumption is currently billed every 2 months. The result is that the AWWC for customers receiving bills in odd months (January, March, etc.) will include four meter readings between October and May, and customers receiving bills in even months (February, April, etc.) will include three meter readings between November and April. Despite potential errors caused by this method of calculating AWWC, the provided consumption data was the most accurate data available, and this AWWA calculation method, consistent with the City's billing rate calculations for single-family residential sewer connections, was used for the flow analyses presented in this chapter. To be conservative, the AWWC was used to estimate the domestic AAF for the year that the 7-month period began in (i.e., the AWWC calculated for the 7-month period between November 1, 2012, and May 31, 2013, was used for the 2012 domestic AAF).

The City's water consumption data included information for single-family residential connections with septic systems. These customers were billed for water consumption but were excluded from sewer billing rates. These connections were excluded from estimating the domestic AAF in the sewer system but were incorporated into future flow projections.

The 2014 domestic AAF for all residential connections was 1.87 million gallons per day (MGD) or 63 gpcd. The value does not include infiltration and inflow, wastewater generated by commercial customers, or discharge factors (percent of drinking water consumption that is recovered as wastewater in the sewer system). For comparison, the King County *Updated Planning Assumptions for Wastewater Flow Forecasting* estimated the flow for residential customers to be 54 gpcd, which included a discharge factor of 0.8 or 0.9 depending on the data source.

Table 4-1 summarizes the estimated domestic AAF by class and total domestic AAFs to King County's Eastside Interceptor for 2012 through 2014.

Table 4-1
City's Historical Wastewater Flows

Description	Year 2012	Year 2013	Year 2014	Average (2012 - 2014)
Single-family Accounts				
Sewer Accounts (ERUs)	9,002	9,075	9,206	9,094
Sewer Population	19,354	19,511	19,793	19,553
Domestic AAF (gpd)	1,349,912	1,223,743	1,255,936	1,276,530
Multi-family Accounts				
Sewer Accounts	624	621	619	621
Sewer ERUs	3,910	4,301	4,506	4,239
Sewer Population[1]	8,407	9,248	9,689	9,115
Domestic AAF (gpd)	586,398	580,009	614,773	593,727
Total of Residential Accounts				
Domestic AAF (gpd)	1,936,309	1,803,752	1,870,709	1,870,257
Sewer Accounts	9,626	9,696	9,825	9,716
Sewer ERUs	12,912	13,376	13,712	13,334
Sewer Population[1]	27,762	28,759	29,481	28,667
Domestic AAF per ERU (gpd per ERU)	150	135	136	140
Domestic AAF per Capita (gpcd)	70	63	63	65
Commercial Accounts				
Domestic AAF (gpd)	497,168	474,588	541,418	504,392
Sewer Accounts	611	612	608	610
Sewer ERUs	3,315	3,519	3,969	3,601
Employees[2]	30,124	37,981	30,124	32,743
Domestic AAF per Employee (gped)[3]	17	---	18	17
Total				
Domestic AAF (gpd)	2,433,477	2,278,341	2,412,128	2,374,648
Sewer Accounts	10,237	10,308	10,433	10,326
Sewer ERUs	16,228	16,896	17,681	16,935
Domestic AAF per ERU (gpd per ERU)	150	135	136	140

NOTES:
1. Existing multi-family residential population in the sewer service area is estimated based on average single-family residential winter water consumption per connection and total multi-family residential winter water consumption.
2. No data is available for the number of employees in the City's sewer service area in 2013 or 2014. The number of employees in 2013 are the employees in the City limits, which include the annexation areas that are not in the City's sewer service area. The number of employees in 2014 are assumed to be the same as 2012 since there was a slight decrease in the number of commercial accounts.
3. Domestic AAF per employee was not determined for 2013 because accurate information is not available for the number of employees in the City's sewer service area for 2013.

Based on the limited data available, the trend appears to be a decrease in single-family flows with an increase in multi-family flows. This could indicate the direction of the City's growth, with more multi-family units being developed compared to single-family homes.

An estimation of wastewater generated by employees was also approximated using water consumption data for the same time period. The City limits and sewer service area were almost

the same in 2012. After the annexations of several neighborhoods (see **Chapter 3**), the City limits were expanded but the sewer service area remained the same. For this reason, an approximation of employees in the City's sewer service area for 2013 and 2014 was not available. For the purposes of these analyses, the employees in 2014 are assumed to be the same as 2012 since there was a slight decrease in the number of commercial accounts.

The 2014 domestic AAF for all commercial connections was 0.54 MGD or 18 gped. The value does not include infiltration and inflow, wastewater generated by residential customers, or discharge factors. For comparison, the King County *Updated Planning Assumptions for Wastewater Flow Forecasting* also estimated the flow for residential customers to be 18 gped.

PEAKING FACTORS

Once existing flow rates are measured and defined, projected flow rates can be developed. Projected flows are used to further analyze how well the existing system will perform in the future, and to determine improvements required to maintain or improve system function. In order to establish projected flow scenarios for a sewer system, peaking factors need to be determined for the existing system, which can then be applied to projected future flow rates. Peaking factors are the ratio of higher flows, such as maximum day flow (MDF) or peak hour flow (PHF), to the AAF. **Table 4-2** shows the lift station AAF rates, **Table 4-3** shows the lift station MDF rates, and **Table 4-4** shows the MDF peaking factors at the City's lift stations over the 2008 through 2014 period.

Table 4-2
Historical AAFs at the City's Lift Stations

Historical AAF (gpd)								
	Year							Average (2008 - 2014)
Lift Station	2008	2009	2010	2011	2012	2013	2014	
Lake Plaza	243,000	283,500	270,000	216,000	256,500	243,000	229,500	248,786
Rose Point	14,400	14,400	21,600	10,800	14,400	18,000	21,600	16,457
South Bay	4,320	8,640	4,320	4,320	4,320	4,320	4,320	4,937
Trend	5,280	8,448	8,448	6,336	6,336	8,448	8,544	7,406
Waverly Park	20,304	33,840	27,072	27,072	30,456	27,072	37,224	29,006
Yarrow Bay II	4,260	5,112	5,112	4,260	4,686	4,260	4,260	4,564

Table 4-3
Historical MDFs at the City's Lift Stations

Historical MDF (gpd)								
	Year							Average (2008 - 2014)
Lift Station	2008	2009	2010	2011	2012	2013	2014	
Lake Plaza	486,000	436,500	495,000	454,500	648,000	481,500	414,000	487,929
Rose Point	21,600	43,200	106,200	28,800	59,400	30,600	54,000	49,114
South Bay	7,560	10,800	17,280	10,800	19,440	10,800	11,880	12,651
Trend	7,392	17,952	28,512	12,672	22,176	14,784	19,008	17,499
Waverly Park	28,764	77,832	155,664	87,984	159,048	59,220	106,596	96,444
Yarrow Bay II	5,538	6,390	9,372	5,964	5,964	8,520	10,650	7,485

Table 4-4
Summary of MDF Peaking Factors at the City's Lift Stations

MDF Peaking Factor (MDF/AAF)								
	Year							Average
Lift Station	2008	2009	2010	2011	2012	2013	2014	(2008 - 2014)
Lake Plaza	2.00	1.54	1.83	2.10	2.53	1.98	1.80	1.97
Rose Point	1.50	3.00	4.92	2.67	4.13	1.70	2.50	2.92
South Bay	1.75	1.25	4.00	2.50	4.50	2.50	2.75	2.75
Trend	1.40	2.13	3.38	2.00	3.50	1.75	2.22	2.34
Waverly Park	1.42	2.30	5.75	3.25	5.22	2.19	2.86	3.28
Yarrow Bay II	1.30	1.25	1.83	1.40	1.27	2.00	2.50	1.65

Peaking factors for collection system pipe and lift station sizing are typically based on PHF rates. There are no direct measurements for PHFs at the City's lift stations, so this value could not be obtained for comparison. All the City-owned lift stations, with the exception of the Lake Plaza Lift Station, have smaller service areas, where it is typical to have larger peaking factors compared to lift stations that serve a larger area of a sewer system. In addition, the Rose Point, South Bay, Trend, Waverly Park, and Yarrow Bay II Lift Stations are smaller lift stations in comparison to the Lake Plaza Lift Station. The values presented in **Table 4-4** are in the range of peaking factors considered typical since these lift stations' serve smaller areas, which can present higher peaking factors.

For the purposes of this GSP, an existing PHF factor was estimated for each sewer drainage basin (**Table 4-5**). These values were determined based on the following information.

- An equivalent population determined for each of the sewer drainage basins, based on the domestic AAF for the sewer drainage basin and the City's residential domestic AAF per capita (63 gpcd).
- Figure C1-1 in the Washington State Department of Ecology's (Ecology) *Criteria for Sewage Works Design* (commonly referred to as the "Orange Book"), which provides peaking factor guidelines based on population.

Table 4-5
Peaking Factors for the City's Sewer Drainage Basins

Basin Name	Domestic AAF (gpd)	Domestic PHF Peaking Factor (PHF/AAF)
116th Avenue NE	9,880	4.19
Eastside Interceptor	1,215,100	2.67
Juanita	214,000	3.40
Juanita Bay	23,270	4.04
Kirkland	550,295	3.02
Lake Plaza	160,015	3.51
Rose Point	18,245	4.09
South Bay	4,290	4.29
Trend	6,190	4.25
Watershed Park	6,450	4.24
Waverly Park	13,145	4.14
Yarrow Bay	171,790	3.48
Yarrow Bay II	3,830	4.30

NOTE:
-Flows shown in this table are rounded off and approximate.

The peaking factors presented in **Table 4-5** were used to estimate existing and projected future domestic wastewater PHFs generated by the City's sewer customers.

INFLOW AND INFILTRATION

A sanitary sewer system must be able to carry the domestic wastewater generated by utility customers and the extraneous I/I that is a part of every sewer collection system. Excessive I/I in a sewer collection system can lead to serious issues within the collection system that may include wastewater system backups and overflows to accelerating the structural deficiencies of the collection system. Excessive I/I can also inflate capacity requirements of the proposed collection and treatment system infrastructure.

I/I is the combination of groundwater and surface water that enters the sewer system. Infiltration is typically groundwater entering the sewer system through defects in the sewer system infrastructure, such as fractured pipes and leaking manholes and pipe joints. Inflow is typically surface water that enters the sewer system from sources such as roof and street drains and leaky manhole covers.

Reducing sewer collection system I/I is essential for two purposes: 1) it results in a lowered risk of sanitary sewer overflows; and 2) it reduces the cost of conveying and treating wastewater. By reducing or eliminating I/I sources, the extraneous I/I water that previously occupied the conveyance and treatment systems can now be occupied by sewage. This leads to delaying projects to improve conveyance and treatment systems that were needed because of this extraneous I/I water.

The goals of King County (County) include the reduction of direct I/I and long-term I/I control. Direct I/I reduction represents rehabilitation or replacement projects, while long-term I/I control refers to policy, administrative, financial, and technical measures.

Any I/I studies that are conducted in the future should follow the guidelines defined in Chapters 1-7 and 1-8 of Ecology's Orange Book. A proposed I/I evaluation is recommended in the City's Capital Improvement Program (CIP) in **Chapter 7**.

For the purposes of these analyses, the peak hour I/I flow rates were based on a 20-year storm peak hour event and were distributed uniformly throughout each sewer drainage basin based on a gallon per acre per day (gpad) basis. The analyses presented in this chapter and the City's sewer system model include peak hour I/I flow rates consistent with the County's Regional Infiltration and Inflow Control Program. The County estimated peak hour I/I flow rates throughout KCWTD's regional wastewater system as part of the 2009 through 2011 Decennial Flow Monitoring. The County estimated peak hour I/I flow rates in the City's sewer service area to range from 1,396 to 9,218 gpad (**Figure 4-1**), which are relatively high I/I flow rates. The areas with the highest peak hour I/I flow rates include the downtown area and sections of the City's sewer service area adjacent to Lake Washington and Yarrow Bay; the areas with the lowest peak hour I/I flow rates include the eastern and northern regions of the City's sewer system.

Total peak hour I/I flow for each of the City's existing sewer drainage basins were based on the County's estimated peak hour I/I flow rates and the sewered area (based on the County's GIS data) in each of the City's sewer drainage basins. The existing peak hour I/I flow rate per acre and total peak hour I/I flow rate for each of the City's existing sewer drainage basins for a 20-year storm peak hour event are shown in **Table 4-6**.

Table 4-6
Existing 20-year Peak Hour I/I Flow Rates

Basin Name	Peak Hour I/I per Acre (gpad)	Sewered Basin Area (acres)	Total Peak Hour Basin I/I (gpd)
116th Avenue NE	3,875	34	130,474
Eastside Interceptor	4,894	2,125	10,401,916
Juanita	4,938	538	2,654,827
Juanita Bay	1,702	12	21,198
Kirkland	9,180	677	6,212,415
Lake Plaza	9,199	140	1,290,340
Rose Point	4,965	25	123,978
South Bay	5,071	7	34,596
Trend	6,356	19	119,927
Watershed Park	3,871	8	31,016
Waverly Park	8,957	45	407,456
Yarrow Bay	8,475	184	1,556,817
Yarrow Bay II	8,463	8	67,271

Projected total peak hour I/I flow rates for each of the City's sewer drainage basins were based on the total existing peak hour I/I flow rates, potentially sewered area (based on the County's GIS data) in the sewer drainage basin, and a peak hour I/I flow rate of 2,000 gpad for the potentially sewered area. This is consistent with the County's regional modeling, which assumes 2,000 gpad for new construction.

For the purposes of this GSP, it was assumed the potentially sewered area would be sewered by 2035, and that sewering these areas would occur based on a linear growth rate. This is more aggressive than the County's regional modeling, which assumes potentially sewered areas being developed at a rate of 20 percent per decade. For the analyses presented in this chapter, the potentially sewered areas were estimated to have a peak hour I/I flow rate of 600 gpad for 2021 (6-year) and 2,000 gpad for 2035 (20-year) based on these assumptions.

The projected additional I/I flow rates of 600 gpad (for 2021) and 2,000 gpad (for 2035) for new construction were multiplied by the area of the potentially sewered areas (which are currently unsewered) in each basin to estimate the additional I/I flow for 2021 and 2035, respectively. The projected total peak hour I/I flows for each basin were estimated by adding the projected additional I/I flow for new construction to the existing total peak hour I/I flow for that basin. The total peak hour I/I flow for each scenario was converted from gallons per day (gpd) to gallons per minute (gpm). The formulas below were used to estimate I/I flow rates in each sewer drainage basin for this GSP.

$$\begin{bmatrix}\text{Existing (2014)}\\ \text{Total Peak Hour I/I}\\ \text{(gpm)}\end{bmatrix} = \begin{bmatrix}\text{Peak Hour I/I}\\ \text{per Acre}\\ \text{(gpad)}\end{bmatrix} \times \begin{bmatrix}\text{Sewered Area}\\ \text{(acres)}\end{bmatrix} \times \left[\frac{\text{1 day}}{\text{1440 minutes}}\right]$$

$$\begin{bmatrix}\text{Projected 2021}\\ \text{Total Peak Hour I/I}\\ \text{(gpm)}\end{bmatrix} = [\text{600 gpad}] \times \begin{bmatrix}\text{Potentially}\\ \text{Sewered Area}\\ \text{(acres)}\end{bmatrix} \times \left[\frac{\text{1 day}}{\text{1440 minutes}}\right] + \begin{bmatrix}\text{Existing (2014)}\\ \text{Total Peak Hour I/I}\\ \text{(gpm)}\end{bmatrix}$$

$$\begin{bmatrix}\text{Projected 2035}\\ \text{Total Peak Hour I/I}\\ \text{(gpm)}\end{bmatrix} = [\text{2,000 gpad}] \times \begin{bmatrix}\text{Potentially}\\ \text{Sewered Area}\\ \text{(acres)}\end{bmatrix} \times \left[\frac{\text{1 day}}{\text{1440 minutes}}\right] + \begin{bmatrix}\text{Existing (2014)}\\ \text{Total Peak Hour I/I}\\ \text{(gpm)}\end{bmatrix}$$

For the purposes of this GSP, it was assumed the existing I/I flow rates would not further degrade over time in the City's existing sewer system, and that the City's staff would perform maintenance on the City's sewer system in a manner that would prevent further degradation of the existing sewer system. The City's regular maintenance program includes a rotation cleaning schedule of its gravity collection system, and City staff also perform visual inspections to identify any maintenance issues that may contribute to I/I and make repairs as necessary. In addition, the results of improvement projects to correct I/I in an existing sewer system can be highly variable in effectiveness for I/I reduction and are difficult to predict.

A maximum day I/I per sewered area quotient was estimated for each of the City's lift stations for 2008 through 2014 from the difference between maximum day flow and minimum day flow divided by the sewered area served by the lift station, shown in **Table 4-7**. On average, from 2008 through 2014, according to **Table 4-7**, the Lake Plaza and Waverly Park Lift Stations have the

highest maximum day I/I per sewered area quotient, and the Yarrow Bay II and Trend Lift Stations have the lowest maximum day I/I per sewered area quotient.

Table 4-7
Maximum Day I/I per Sewered Area Quotients for the City's Lift Stations

Maximum Day I/I per Sewered Area Quotient (gpad)								
	Year							Average
Lift Station	2008	2009	2010	2011	2012	2013	2014	(2008 - 2014)
Lake Plaza	1,829	1,604	2,053	1,861	3,016	2,021	1,636	2,003
Rose Point	433	1,298	3,821	865	1,946	649	1,442	1,493
South Bay	791	633	2,216	1,266	2,374	1,108	1,266	1,379
Trend	168	672	1,119	392	895	504	672	632
Waverly Park	260	1,190	2,938	1,413	2,976	818	1,748	1,621
Yarrow Bay II	214	268	643	322	268	643	911	467

PROJECTED WASTEWATER FLOW RATES

The planning period (2035) growth rate is projected to add a total of 9,499 additional people and 15,545 additional employees to the sewer system population. Traffic Analysis Zone (TAZ) mapping and data for existing and projected future single-family and multi-family housing units and employees and development projects, currently under permit review or undergoing construction, were used to determine the future population projections and their distribution. Refer to **Chapter 3** for more information regarding the development of both population growth scenarios. Future flow rates estimated for the 2021 (6-year) and 2035 (20-year) planning horizons were based on these population and employee projections.

The projected flows and the flow distribution throughout the City's sewer service area were developed using the following assumptions.

- The existing AAF per capita for 2014 is approximately 63 gpcd, excluding I/I, as shown in **Table 4-1**. The existing AAF per capita for 2014 is low for recent years and lower than Ecology's sewer system design guidelines, which estimates 100 gpcd for residential AAF.
- The existing AAF per employee for 2014 is approximately 18 gped, excluding I/I, as shown in **Table 4-1**. The existing AAF per employee is in accordance with Ecology's sewer system design guidelines, which estimates 15 to 35 gped for AAF of factory workers.
- Existing peak hour I/I in the City's sewer service area will range from 1,396 to 9,218 gpad for a 20-year storm peak hour event in the currently sewered areas in each of the City's sewer drainage basins, as previously discussed in the **Inflow and Infiltration** section of this chapter.
- For planning purposes, the future AAF per capita will be 76 gpcd, excluding I/I. This is in accordance with the projected water demand of 95 gpcd in the City's *Comprehensive Water System Plan*, which was last revised in 2015, and the assumption that 80 percent of the water consumed is discharged to the sewer system, which is in accordance with King County's *Updated Planning Assumptions for Wastewater Flow Forecasting*. The projected water demands

from the City's *Comprehensive Water System Plan* includes both residential and commercial water demands.

- An estimated 34 septic system conversions per year for 2016 through 2035, as provided by City staff based on historical data.
- For planning purposes, the future AAF per employee will be 20 gped excluding I/I, which is in accordance with Ecology's sewer system design guidelines.
- Future peak hour I/I in the City's sewer service area will be the existing peak hour I/I plus 600 gpad for 2021 (6-year) and 2,000 gpad for 2035 (20-year) in the currently potentially sewered areas in each of the City's sewer drainage basins, as previously discussed in the **Inflow and Infiltration** section of this chapter.
- At the time this GSP was being drafted, the City and Northshore were working on a mutual agreement to have Northshore assume ownership of the NE 124th Street sewer drainage basin. This agreement was completed in 2017. For the purposes of this GSP, the NE 124th Street sewer drainage basin was included in the City's sewer service area for all projections. However, the wastewater flow projections for this sewer drainage basin are not shown separated from the other sewer drainage basins in this GSP.

The projected future wastewater flows resulting from the increase in population and I/I anticipated for both the 2021 and 2035 time periods were allocated throughout the City's sewer service area. The existing and projected flows are summarized in **Table 4-8**. The flow projections are included in **Appendix E**.

Table 4-8
Projected Sewer Drainage Basin Domestic AAF and Total PHF Rates

	Existing (2014)				Projected 2021				Projected 2035			
Basin Name	Domestic AAF (gpd)	Domestic PHF (gpm)	Peak Hour I/I (gpm)	Total PHF (gpm)	Domestic AAF (gpd)	Domestic PHF (gpm)	Peak Hour I/I (gpm)	Total PHF (gpm)	Domestic AAF (gpd)	Domestic PHF (gpm)	Peak Hour I/I (gpm)	Total PHF (gpm)
116th Avenue NE	9,880	30	90	120	17,065	50	115	165	18,300	55	170	225
Eastside Interceptor	1,215,100	2,255	7,225	9,480	1,430,120	2,655	7,400	10,050	1,806,165	3,350	7,805	11,155
Juanita	214,000	505	1,845	2,350	263,595	620	1,870	2,490	331,280	780	1,930	2,710
Juanita Bay	23,270	65	15	80	26,320	75	15	90	26,550	75	15	90
Kirkland	550,295	1,155	4,315	5,465	852,525	1,785	4,320	6,105	1,017,870	2,130	4,325	6,460
Lake Plaza	160,015	390	895	1,285	194,760	475	895	1,370	201,845	490	895	1,390
Rose Point	18,245	50	85	140	20,605	60	85	145	22,985	65	85	150
South Bay	4,290	15	25	35	4,845	15	25	40	4,920	15	35	45
Trend	6,190	20	85	100	7,155	20	85	105	8,360	25	85	110
Watershed Park	6,450	20	20	40	7,285	20	20	45	7,550	20	20	45
Waverly Park	13,145	40	285	320	14,845	45	285	325	16,640	50	285	330
Yarrow Bay	171,790	415	1,080	1,495	199,820	485	1,085	1,570	283,560	685	1,100	1,790
Yarrow Bay II	3,830	10	45	60	4,325	15	45	60	4,380	15	45	60
Yarrow Bay (Bellevue)[1]	264,320	365	975	1,340	272,160	380	975	1,350	287,840	400	975	1,375

NOTES:
-Flows shown in this table are rounded off and approximate.
1. These existing and projected wastewater flows are for the City of Bellevue's (Bellevue) Yarrow Bay Sewer Drainage Basin that discharges to the City's Yarrow Bay Sewer Drainage Basin. Wastewater flows from Bellevue's Yarrow Bay Sewer Drainage Basin are not included in the City's historical and projected wastewater flow totals presented in this chapter.

Wastewater flows from the City of Bellevue's (Bellevue) Yarrow Bay Sewer Drainage Basin are discharged to the City's Yarrow Bay Sewer Drainage Basin. The existing and projected sewer flows for Bellevue Yarrow Bay Sewer Drainage Basin, summarized in **Table 4-8**, were estimated based

on Tables 4-6 and 4-7 of Bellevue's 2014 Wastewater System Plan and assuming a linear growth rate. Wastewater flows from Bellevue's Yarrow Bay Sewer Drainage Basin are included in the hydraulic modeling results but are not included in the City's historical and projected wastewater flow totals presented in this chapter.

Current lift station pumping capacity and flow rate projections are provided in **Table 4-9**. The Trend Lift Station is planned to be eliminated and abandoned in the future. However, it is uncertain when this will occur, so the projections in **Tables 4-8** and **4-9** do not reflect projects to install gravity main so that the Trend Lift Station can be eliminated and abandoned. These improvements are discussed further in **Chapter 7**.

Table 4-9
Projected Lift Station Domestic AAF and Total PHF Rates

Lift Station	Firm Capacity (gpm)	Existing (2014)		Projected 2021		Projected 2035	
		Domestic AAF (gpd)	Total PHF (gpm)	Domestic AAF (gpd)	Total PHF (gpm)	Domestic AAF (gpd)	Total PHF (gpm)
Lake Plaza	1,157	160,015	**1,285**	194,760	**1,370**	201,845	**1,390**
Rose Point	297	18,245	140	20,605	145	22,985	150
South Bay	161	4,290	35	4,845	40	4,920	45
Trend	211	6,190	100	7,155	105	8,360	110
Waverly Park	285	13,145	**320**	14,845	**325**	16,640	**330**
Yarrow Bay II	106	3,830	60	4,325	60	4,380	60

NOTES:
-Flows shown in this table are rounded off and approximate.
-Highlighted flows exceed the current firm capacity of the lift station.

As indicated in **Table 4-9**, Lake Plaza and Waverly Park Lift Stations are at capacity. The City has indicated it has not had any overflow events from 2008 to the present. However, the PHF rates presented in **Tables 4-8** and **4-9** are based on a 20-year storm peak hour event, which the City has not experienced between 2008 and 2014.

The City is also planning to perform an I/I study in the future to identify areas of its system with significant I/I and cost-effective improvements that could be implemented to reduce I/I in the City's sewer system. These I/I improvements could reduce or mitigate the I/I component of the PHFs in the City's sewer collection system.

In addition, the City's sewer hydraulic model would likely be converted to EPA-SWMM, or similar hydraulic modeling program, as part of the I/I study. Using EPA-SWMM to perform the hydraulic modeling would provide a more realistic representation of flows in the sewer system than SewerCAD®, which was used to hydraulically model the City's sewer system. EPA-SWMM models flow attenuation in a sewer collection system as wastewater travels downstream in the model, whereas SewerCAD® models flows in a sewer collection system as a compilation of all upstream flows and does not account for flow attenuation. Modeling the City's sewer system in EPA-SWMM, as part of the I/I study, could show there is enough flow attenuation in the City's sewer drainage basins that the PHFs at the Lake Plaza and Waverly Park Lift Stations are lower than the firm capacity of these lift stations.

Capacity upgrades to the Lake Plaza and Waverly Park Lift Stations may be necessary to handle future flows. These improvements and the I/I study are discussed further in **Chapter 7**.

PROJECTED FLOW RATES WITH WATER USE EFFICIENCY

Future wastewater flow projections were computed with and without drinking water savings expected from implementing Water Use Efficiency (WUE) measures contained in the Cascade Water Alliance (Cascade) WUE Program in Appendix K of the City's *Comprehensive Water System Plan*. Cascade's WUE Program presents a regional goal of saving 0.6 MGD on an annual basis and 1.0 MGD on a peak season basis by 2020. The City's portion of Cascade's regional goal is approximately 53,000 gallons of drinking water per day (gpd) on an annual basis. Beyond 2020, the wastewater flow projections with the WUE Program do not include additional drinking water savings beyond the initial goal.

The projected domestic AAF was reduced to reflect the WUE goals and used as the basis for future wastewater flow projections with the implementation of the WUE Program. Applying the City's water use reduction goals to the 2014 AAF rates results in the projected wastewater flow rates shown in **Table 4-10**.

Table 4-10
Projected Sewer System Domestic AAF and Total PHF Rates

	Existing (2014)				Projected 2021				Projected 2035			
Description	Domestic AAF (gpd)	Domestic PHF (gpm)	Peak Hour I/I (gpm)	Total PHF (gpm)	Domestic AAF (gpd)	Domestic PHF (gpm)	Peak Hour I/I (gpm)	Total PHF (gpm)	Domestic AAF (gpd)	Domestic PHF (gpm)	Peak Hour I/I (gpm)	Total PHF (gpm)
System Flow w/o WUE	2,412,130	5,015	16,125	21,145	3,150,675	6,615	16,365	22,985	3,875,930	8,115	16,930	25,040
System Flow with WUE	---	---	---	---	3,097,875	6,505	16,365	22,870	3,823,130	8,000	16,930	24,930

NOTES:
-Flows shown in this table are rounded off and approximate.

Table 4-10 presents the future 6-year and 20-year wastewater flow projections for the City's sewer system with and without WUE estimated reductions in water use from achieving WUE goals described in the WUE Program. The projected domestic PHFs with WUE shown were computed from the ratio of the projected AAFs with and without WUE reductions.

The analysis and evaluation of the existing wastewater system with proposed improvements, as presented in **Chapters 4**, **6**, and **7**, is based on 20-year projected wastewater flow data without WUE reductions. This ensures that the future system will be sized properly to meet all requirements, whether or not additional water use reductions are achieved. However, the City will continue to pursue further reductions in water use by implementing the WUE Program.

SUMMARY

Table 4-11 provides a summary of the population and flow information presented in this chapter.

Table 4-11
Population and Flow Analysis Summary

Description	Existing (2014)	Projected 2021	Projected 2035
Population Data			
City Population	82,590	87,260	95,913
Sewer Service Area Population[1]	29,481	32,141	38,981
Sewer Service Area Employees	30,124	35,399	45,669
Sewer Service Area ERUs	17,681	20,322	25,000
Wastewater Flow Basis Data			
Residential Domestic AAF per Capita (gpcd)	63	76	76
Commercial Domestic AAF per Employee (gped)	18	20	20
Domestic AAF per ERU (gpd per ERU)	136	155	155
Domestic Wastewater Flow (MGD)[2]			
Total Residential Domestic AAF	1.87	2.44	2.96
Total Commercial Domestic AAF	0.54	0.71	0.91
Total Domestic AAF	2.41	3.15	3.88

NOTES:
1. Projected sewer service area population includes an estimated 34 septic system conversions per year.
2. Flows shown in this table are rounded off and approximate.

The projected domestic flows presented in this chapter were estimated assuming a future AAF per capita of 76 gpcd and a future AAF per employee of 20 gpcd, which are greater than the historical flow rates. In addition, future sewer flow rates for commercial and industrial developments are difficult to estimate without specific information about the proposed developments. If the AAF per capita and AAF per employee remain below projections, it is possible that the City may not reach some of the capacity deficiencies identified in **Chapter 6** in the 20-year planning period based on flow. Therefore, the City should continue to monitor AWWC on a yearly basis.

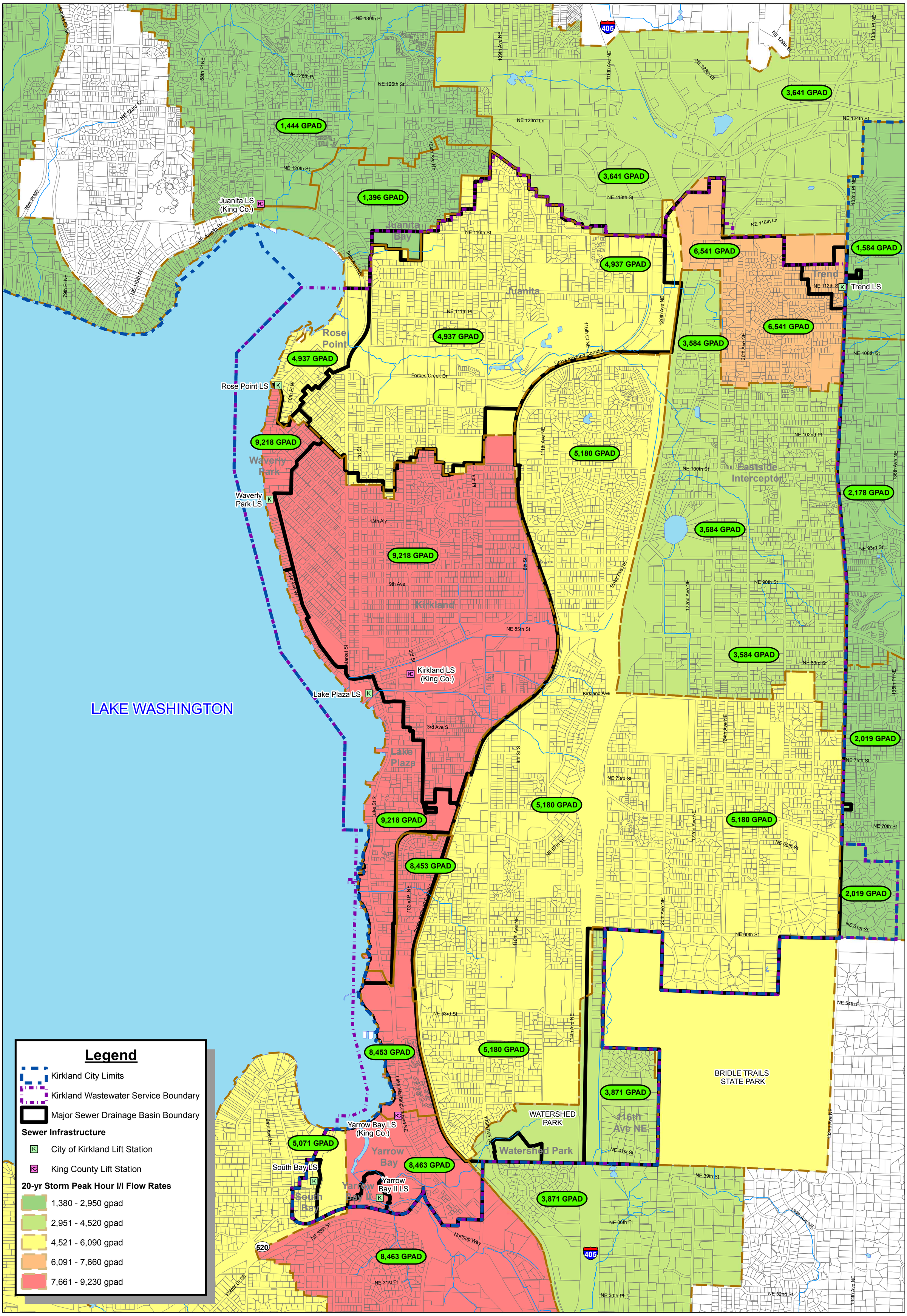

COORDINATE SYSTEM: NAD 1983 HARN STATEPLANE WASHINGTON NORTH FIPS 4601 FEET

RH2 ENGINEERING

NORTH

1 inch = 1,000 feet

0 500 1,000 2,000 Feet

DRAWING IS FULL SCALE WHEN BAR MEASURES 2"

CITY OF KIRKLAND WASHINGTON

Figure 4-1
20-yr Storm Peak Hour I/I Flow Rates
City of Kirkland General Sewer Plan

Vicinity Map

This map is a graphic representation derived from the City of Kirkland Geographic Information System. It was designed and intended for City of Kirkland staff use only; it is not guaranteed to survey accuracy. This map is based on the best information available on the date shown on this map.

Any reproduction or sale of this map, or portions thereof, is prohibited without express written authorization by the City of Kirkland.

This material is owned and copyrighted by the City of Kirkland.

THIS PAGE INTENTIONALLY LEFT BLANK

Policies and Design Criteria

5

INTRODUCTION

The City of Kirkland (City) operates and plans sewer service for the City and associated sewer service area residents and businesses according to the design criteria, laws, and policies that originate from the U.S. Environmental Protection Agency (EPA) and the Washington State Department of Ecology (Ecology).

These laws, design criteria, and policies guide the City's operation and maintenance of the sewer system on a daily basis, as well as the City's plan for growth and improvements. Their overall objective is to ensure the City provides high-quality sewer service at a fair and reasonable cost to its customers. They also set the standards the City must meet to ensure that the sewer system is adequate to meet existing and future flows. The system's ability to handle these flows is detailed in **Chapter 6**, and the recommended improvements are identified in **Chapter 7**.

The City's Wastewater Division has implemented policies and programs that follow what is outlined in EPA's *Guide for Evaluating Capacity, Management, Operation, and Maintenance (CMOM) Programs at Sanitary Sewer Collection Systems* to better manage, operate, and maintain its sewer system, investigate capacity constrained areas of the sewer system, proactively prevent sanitary sewer overflows (SSOs), and help maintain the value of the City's investment in its sewer system. The City's CMOM policies and programs include, but are not limited to, the following.

- Knowing and assessing the condition of the sewer system.
- Planning and scheduling work on the City's sewer system components based on their condition and performance.
- Planning and scheduling repairs and rehabilitation of the City's sewer system components based on their condition and performance.
- Developing a fats, oils, and grease (FOG) program to eliminate FOG within the City's sewer system.
- Training personnel.

The City Council adopts regulations and policies that cannot be less stringent or in conflict with those established by the federal and state governments. The City's policies take the form of ordinances, memoranda, and operational procedures, many of which are summarized in this chapter. Other publications, such as the City's Municipal Zoning Codes and Sanitary Sewer Pre-approved Notes, Design Criteria, and Plans (**Appendix F**), outline design standards and procedures for the development of the City's sanitary sewer system. Some of the standards presented in this chapter were provided in the 2010 *General Sewer Plan* prepared by Roth Hill, LLC, and are presented below to preserve the City's sewer standards.

The policies associated with the following categories are presented in this chapter.

- Regulations
- Customer Service
- Collection Systems
- Lift Stations

- Operational
- Organizational
- Financial

REGULATIONS

National Pollutant Discharge Elimination System Permit

The State of Washington (State) regulates the federal effluent limitations with the National Pollutant Discharge Elimination System (NPDES) program. Wastewater discharges into the waters of the State shall have a NPDES waste discharge permit from Ecology. The City does not have a NPDES waste discharge permit because it discharges its wastewater to King County's (County) Eastside Interceptor, which conveys the wastewater to the County's South Wastewater Treatment Plant (WWTP), as discussed in **Chapter 2**. A copy of the NPDES waste discharge permit for the South WWTP is included in **Appendix A**.

CUSTOMER SERVICE POLICIES

Sewer Service and Connection

- The City will strive to provide sewer service to the people within the City's sewer service area, provided all policies related to service can be met.
- The City will coordinate and establish agreements with neighboring utility districts, cities, and the County to provide sewer service in and adjacent to the City's sewer service area. These agreements will establish a permanent sewer service area.
- The City will support and participate in applicable regional plans to provide and maintain a reliable and adequate sewer system.
- The City will coordinate closely with adjacent jurisdictions to determine applicable regulatory requirements, growth projections, and opportunities for joint projects. Interlocal agreements will be prepared between the pertinent parties on all joint projects.
- The City will participate in mutual aid agreements with adjacent jurisdictions, the County, and the State when necessary.
- Sewer system service extensions will be allowed to provide sewer service in the City's sewer service area if the project is consistent with adopted Zoning and Municipal Codes and sewer utility policies.
- Prior to the connection of any property to the City's sewer system, the sewer main lines must be extended to the subject property's farthest property line by way of public right-of-way or easement.
- The sewer main shall be owned and maintained by the City. The side sewer service line and any associated appurtenances from the main to the building shall be owned and maintained by the property owner (Kirkland Municipal Code 15.28.135).

Septic Systems

- Properties with existing single-family dwellings within the City's sewer service area with a septic system that is failing or has failed must connect to the City's sewer system if the property is within 330 feet of an existing sewer main.
- Properties with existing multi-family dwellings within the City's sewer service area with a septic system that is failing or has failed must connect to the City's sewer system if the property is within 660 feet of an existing sewer main.
- The City is aware of Engrossed Senate Bill (ESB) 5871, which became effective on July 24, 2015, and requires cities, towns, and counties to offer an administrative appeals process to consider denials of permit applications to repair or replace a septic system where connection to a sewer system is required for single-family residences. The City will review appeals to repair or replace septic systems as they are submitted in accordance with ESB 5871.
- Properties with a single-family dwelling located more than 330 feet from an existing sewer main, or a multi-family dwelling located more than 660 feet from an existing sewer main, may request to connect to the sewer system (requiring construction of a sewer main extension to be connected). Whenever a sewer main extension is required to make such a connection possible, the City shall plan, design, and construct such extension within a reasonable time pursuant to the criteria for sewer main extension projects and construction priorities in accordance with applicable City Municipal Codes.

COLLECTION SYSTEM POLICIES AND DESIGN CRITERIA

Sanitary Sewer Design Criteria

- All sewer lines and facilities within the City shall be designed in accordance with good engineering practice by a professional engineer with the minimum design criteria presented in the *Criteria for Sewage Works Design*, prepared by Ecology, August 2008, or as superseded by subsequent updates. Chapter C1 of this document includes standards and guidelines for design considerations (e.g., minimum pipe sizes, pipe slopes, and wastewater velocities), maintenance considerations, estimating wastewater flow rates, manhole locations, leak testing, and separation from other underground utilities. These criteria have been established to ensure that the sanitary sewers convey the sewage and protect the public health and environment. The sewer lines shall also conform to the latest regulatory requirements relating to design.
- The City shall establish construction contract standards. Sewers shall be designed and constructed in accordance with the City's most current Sanitary Sewer Pre-approved Notes, Design Criteria, and Plans (**Appendix F**).
- Future capacity requirements will be estimated by using existing customer connections, a geographic information system (GIS) parcel-based analysis, and projected future household, population, and employment data as provided by the Puget Sound Regional Council (PSRC).
- In accordance with all applicable federal, State, and local regulations, the City will design its sewer system facilities with sufficient capacity to handle the anticipated peak daily flow under normal conditions without any overflows to the environment.

Gravity Sewer Design Criteria

- All gravity sewers shall be a minimum of 8 inches in diameter and sized as required by flow calculations.
- All new gravity sewers shall be designed to have a minimum velocity of 2.0 feet per second when flowing full.
- All new gravity sewers shall be designed with a minimum slope according to what is listed in Table C1-1 of Ecology's *Criteria for Sewage Works Design* (e.g., a minimum slope of 0.40 feet per 100 feet for 8-inch-diameter gravity sewer).
- Normal depth of gravity sewers shall be 7 feet to 12 feet. All other depths shall be approved by the Public Works Department.
- Manholes shall be a minimum of 48 inches in diameter and shall be spaced at intervals not to exceed 400 feet.
- Manholes shall conform to Washington State Department of Transportation (WSDOT) and American Public Works Association standards. See the City's Sanitary Sewer Pre-approved Notes, Design Criteria, and Plans (**Appendix F**) for specific criteria.

Separation between Sanitary Sewer and Other Utilities

- A minimum horizontal separation of 10 feet is required between sewer and water lines (edge to edge).
- The City's Sanitary Sewer Pre-approved Notes, Design Criteria, and Plans (**Appendix F**) will be followed, and the guidelines provided in Ecology's *Criteria for Sewage Works Design* should be followed for difficult spacing or other situations.

Design Period

- The design period is the length of time that a given facility will provide safe, adequate, and reliable service. The design period selected is based on the economic life of a given facility, which is determined by the structural integrity of the facility, the rate of degradation, the replacement cost, the cost of increasing the capacity of the facility, and the projected population growth rate serviced by the facility.
- The life expectancy for new sanitary sewers, using current design practices, is in excess of 50 years.

Force Main Design Criteria

- All force mains within the City shall be designed in accordance with good engineering practice by a professional engineer with the minimum design criteria presented in the *Criteria for Sewage Works Design*, prepared by Ecology, August 2008, or as superseded by subsequent updates. Chapter C2 of this document contains design considerations for force mains.

Side Sewer Design Criteria

- Side sewers shall be constructed in accordance with all applicable City, local, and State regulations. See the City's Municipal Code and Sanitary Sewer Pre-approved Notes, Design Criteria, and Plans (**Appendix F**) for specific criteria.

LIFT STATION POLICIES AND DESIGN CRITERIA

- Lift stations shall be designed in accordance with the City's most current Sanitary Sewer Pre-approved Notes, Design Criteria, and Plans (**Appendix F**) and Ecology's *Criteria for Sewage Works Design*.
- Lift stations will consist of electrical and mechanical equipment that maintenance staff can easily understand and diagnose for problems. Maintenance staff responsible for lift station operation will be trained for the operation and maintenance of mechanical and electrical systems. All information necessary for lift station maintenance and operation will be located onsite.
- Telemetry and supervisory control systems will be available to optimize lift station operations, diagnose impending equipment failure, analyze sewage flow rates, reduce operating costs, and centrally monitor and control all lift station facilities.
- The City will equip each lift station with provisions for emergency power generation, unless the wetwell and tributary main capacity above the high-water alarm is sufficient to hold the peak flow expected during the maximum power outage duration as experienced during the last 10 years. The emergency power generation may consist of a connection for portable generation or an in-place generator set. The emergency generator will provide power to the lift station in the event of a power failure. Lift stations with wetwells that have insufficient storage to provide adequate emergency response time will be equipped with an on-site emergency generator, or additional storage will be installed to provide adequate response time.

OPERATIONAL POLICIES

Maintenance

- Equipment breakdown is given highest maintenance priority, and repairs should be made as soon as possible.
- Equipment should be replaced when it becomes obsolete.
- Worn parts should be repaired, replaced, or rebuilt before they represent a high failure probability.
- Equipment that is out of service should be returned to service as soon as possible.
- A preventive maintenance schedule shall be established for all facilities, equipment, and processes.
- Spare parts shall be stocked for all equipment items whose failure will impact the ability to meet other policy standards.
- Tools shall be obtained and maintained to repair all items whose failure will impact the ability to meet other policy standards.

- Dry, heated shop space shall be available to all maintenance personnel to maintain facilities.
- Written records and reports will be maintained on each facility and item of equipment showing operation and maintenance history.

Temporary and Emergency Services

- The City shall, on a regular basis, update its Emergency Response Plan (ERP). The ERP focuses on problems created by major disasters (such as earthquakes, floods, and winter storms) as part of the City's operations program. The ERP will ensure that adequate emergency provisions and procedures are in place to operate the sewer system.
- The City shall update its Hazard Mitigation and Emergency Response Plans as necessary. These plans include natural and manmade hazards and identify how people and property may be damaged when a hazardous situation occurs. These plans will be available to the public as provided for by existing regulations.
- The City encourages all employees to call the City Response Team at 425-581-3900 24 hours a day if they notice a pipe leak of any kind. This includes sewer overflows and drinking water leaks. The City's procedure for responding to pipe leaks includes the City employee or City Response Team calling Ecology's Northwest Office at 425-649-7000 and reporting the pipe leak to the Environmental Report Tracking System (ERTS), even for drinking water leaks.
- When responding to a sewer overflow, City procedure is to evaluate the situation, determine best management practices, and implement those practices to prevent further contamination. This includes, but is not limited to, using Vactor trucks to clean up leaks and clean out blockages, roadway cleanup, sandbagging, and providing emergency power when appropriate.

Reliability

- The City shall invest sufficient resources to ensure that the sewer system is constructed, operated, and maintained to ensure consistent and reliable service is provided to its customers.

ORGANIZATIONAL POLICIES

Staffing

- The sewer utility staffing levels are established by the City Council based on the City's financial resources and needs of the sewer utility.
- All maintenance personnel will be trained in the skills, procedures, and techniques necessary to efficiently perform their job descriptions. The City will pay fees and employee labor for necessary certification testing and annual renewal fees. Personnel certification and training will comply with State-established standards.
- The City encourages employee participation in workshops, seminars, and other educational programs to improve efficiency and effectiveness of maintenance personnel.
- The City is committed to providing safe and healthy working conditions at all facilities in compliance with all applicable rules, laws, and regulations pertaining to the safety and health of its employees. The City will update its Safety Manual as required by federal and State laws.

FINANCIAL POLICIES

General

- The City will set rates, charges, and fees to maintain sufficient funds to operate, maintain, and upgrade its sewer system as necessary to provide safe and reliable sewer service to its customers. These rates will comply with State regulations and be evaluated in conjunction with the annual budget process to ensure that forecasted expenses and impacts of regulations are reflected in the rate structure.
- Each lot or parcel of real property required to be connected with the City's sewer system shall be subjected to a monthly sewer charge whether such lot or parcel of real property is actually connected to the sewer system. This monthly sewer charge will be waived if the property owner can establish, to the satisfaction of the City Engineer, that the lot or parcel is connected to a septic system approved by the County.
- The sewer connection charge(s) must be paid prior to issuance of the permit by the City and shall be determined for each individual connection as requested by the applicant in accordance with the City's Municipal Code.
- The City shall collect sewer extension charges for owners of properties that individually benefit from publicly built sewer extension facilities, except for those property owners who previously paid for their fair share of such an extension through a Local Improvement District (LID) or Utility LID (ULID).
- The cost of any modification to the system shall be borne by each property abutting upon or benefiting from such modifications or by the owners of such property.
- If sewer system facilities must be installed or upgraded as a result of a developer's impacts, the new facilities or upgrades shall conform to the City's policies, criteria, and standards and shall be accomplished at the developer's expense. The City, however, shall be responsible for any portion of the costs that are attributable to general facilities, such as over-sizing or over-depth requirements, and offer latecomers fees to developers.
- If written application for service is approved by the City, the application shall be considered as a contract in which the applicant agrees to abide by such rates, rules, and regulations in effect at the time of signing the application or as may be adopted thereafter by the City and to pay all charges, rates, and fees promptly.
- In addition to all other user rates and service connection fees required to be paid to the City, service call fees may apply when made at the request of the owner or occupant of the premises for assistance in locating and/or repairing a plugged sanitary sewer drain in accordance with the City's Municipal Code.
- The City shall manage its income and expenses in a self-supporting manner in compliance with applicable laws and regulations and its own financial policies.
- The City shall establish a Capital Improvement Plan (CIP) that describes the anticipated improvements or modifications to the sewer system, planned replacement of aging facilities, upgrades to existing facilities to provide additional capacity for projected growth, and construction of general facilities to aid growth. The CIP will be completed on a biennium basis.

- A working capital reserve will be maintained to cover unanticipated emergencies, bad debts, and fluctuations in cash flow.
- The City will maintain information systems that provide sufficient financial and statistical information to ensure conformance with rate-setting policies and objectives.

Connection Charges

The owners of properties that have not been assessed, charged, or borne an equitable share of the cost of the sewer collection facilities shall pay one or more of the following connection charges prior to connection to a sewer main.

1. Latecomers Fees: Latecomers fees are negotiated with the City, developers, and property owners for the reimbursement of a pro rata portion of the original costs of sewer system extensions and facilities and are documented in a Recovery Contract or City resolution, depending on the application.
2. Connection Charge: The connection charge shall be assessed against any property connecting to the sewer system. This charge is for the major facilities that deliver the sewage to the County's Eastside Interceptor. This charge reimburses customers who have paid for the facilities described and for building capacity to accommodate growth.
3. Developer Extension Charges: These charges are for the administration, review, and inspection of a developer extension project.
4. Developer-funded Improvements: These are costs incurred by a developer to upgrade and increase capacity in the sewer system to accommodate the increase in flow from a proposed development.
5. King County Sewer Treatment Capacity Charge: The capacity charge shall be assessed against any property connecting to a sewer system served by the County. This charge is paid directly to the County for the County's major facilities that deliver the sewage to a WWTP and for the facilities to treat and dispose of the sewage. This charge reimburses customers who have paid for the facilities described and for building capacity to accommodate growth.

Wastewater Collection Evaluation

6

INTRODUCTION

The City of Kirkland (City) will require improvements to its collection system to accommodate growth in the City's sewer service area and collection system extensions and to repair damaged and deteriorating facilities. This chapter presents the evaluation of the City's existing sewer collection system. Individual sewer system components were analyzed to determine their ability to meet policies and design criteria under both existing and projected future flow conditions. The policies and design criteria are presented in **Chapter 5**, and the sewer system analysis is presented in **Chapter 4**. A description of the existing sewer system facilities and current operation is presented in **Chapter 2**.

SEWER MODEL BACKGROUND

Hydraulic Model

Background

Version 8i (SELECTseries 5) of the SewerCAD® program, developed by Bentley Systems, Inc., was used to develop a hydraulic model of the existing sewer collection system, which included gravity mains, force mains, and sewer lift stations. Pipe location, length, diameter, and material and manhole rim and invert elevations were imported to the hydraulic model based on geographic information system (GIS) data provided by the City for sewer facility attributes and contours within the City's sewer service area. The elevation data was spot checked in some areas with the City's as-built drawings. Minimum slope and cover values were also used in the model when no other information was available. These areas are annotated in the model. The output from the hydraulic model was used to evaluate the capacity of the existing collection system and identify general recommendations to handle existing and projected 6-year (2021) and 20-year (2035) sanitary sewer flow rates. The model can be updated and maintained for use as a tool to aid in future planning and design.

The City conducted pump down capacity testing for the lift stations as part of this General Sewer Plan (GSP). The pump down numbers received by the City were used in the model and are discussed further in **Chapter 2**.

The developed hydraulic model includes all gravity mains, lift stations, and force mains owned and operated by the City. Wastewater infrastructure owned and operated by King County (County) are not included in the hydraulic model and the capacity of these system components was not evaluated. These analyses assumed that the County's wastewater infrastructure has sufficient capacity for both existing and projected flow scenarios.

Model Limitations

Due to the number of data gaps and assumptions used in the model, the accuracy of the GIS information provided from the City should be confirmed prior to undertaking any replacement or rehabilitation projects. The results of the modeling should be considered approximate and additional investigations, such as field surveys, flow monitoring, and lift station pump down tests should be performed in the vicinity of any proposed improvements prior to design and construction. If it is

found that the input information differs significantly from actual conditions, the model should be updated accordingly and rerun to confirm the original results.

The modeling was performed using a steady state analysis, which shows all flows reaching all downstream points simultaneously. This is conservative and not truly representative of conditions that occur, since it takes some time for wastewater to travel downstream through the sewer system, which stores and attenuates peak flows.

Flow Data

The hydraulic model was constructed to simulate peak flows in the years 2014, 2021, and 2035. All of these hydraulic scenarios were based on historical winter water consumption, domestic sanitary flow projections, and the County's inflow and infiltration (I/I) flow rates for a 20-year storm peak hour event, as described in **Chapter 4.** The City's existing collection system can be broken into 13 sewer drainage basins and 39 subbasins, as shown in **Figure 2-4**. **Table 4-8** presents existing and projected domestic average annual flows (AAF) and peak hour flows (PHF) for each sewer drainage basin based on the estimated peaking factors for domestic sewer flows and the County's I/I flow rates, as described in **Chapter 4**. Similarly, **Table 4-9** presents this information for each of the City's lift stations. In order to model the flow loadings throughout the existing sewer system, the historical 2014 to 2015 average winter water consumption (AWWC) was compiled to estimate the existing (2014) domestic AAF for each connection currently being served by the City's sewer collection system. These sewer flows were distributed throughout the manholes in the hydraulic model based on locations of the parcels served.

Population and employment data received from the City's Planning Department provided the basis for distributing future flows throughout the City. As discussed in **Chapter 4**, projected domestic wastewater flows were estimated assuming a future AAF per capita of 76 gallons per capita per day (gpcd) and future AAF per employee of 20 gallons per employee per day (gped).

Wastewater flows from the City of Bellevue's (Bellevue) Yarrow Bay Sewer Drainage Basin, presented in **Table 4-8**, are discharged to the City's Yarrow Bay Sewer Drainage Basin. Wastewater flows from Bellevue's Yarrow Bay Sewer Drainage Basin were distributed at manholes in the hydraulic model based on the discharge locations of this basin to the City's Yarrow Bay Sewer Drainage Basin.

Facilities

The hydraulic model of the existing sewer system contains all active existing system facilities owned and operated by the City. Available information for each lift station, such as pump capacity, total dynamic head (TDH), horsepower, wetwell diameter, wetwell depth, and force main diameter, is included in the model. For simplicity, the lift stations are modeled as constant discharge pumps so that they produce a constant discharge regardless of head conditions.

Hydraulic Analyses Results

Hydraulic analyses were performed with the existing flow rates (2014), as well as future flow rates for the 2021 (6-year) and 2035 (20-year) projections. In the evaluation, the criteria for listing a sewer pipe as deficient is that the peak hour flow exceeds 80 percent of the pipe flow capacity. The results of the hydraulic analyses are given in **Appendix G**. **Figure 7-1** provides current system deficiencies and improvements for existing flows. **Figure 7-2** provides capacity deficiencies and improvements for

anticipated developments for the 2021 projections. **Figure 7-3** provides capacity deficiencies and improvements for anticipated developments for the 2035 projections.

Some of the improvements presented in this chapter are from the 2010 GSP prepared by Roth Hill, LLC, and/or the City's Capital Improvement Plan (CIP).

COLLECTION SYSTEM AND LIFT STATION ANALYSES

Gravity Collection System Pipe Capacity Analysis and Deficiencies

Construction of the City's wastewater collection system began in the early 1940s in the downtown portion of the City as part of the federal government war housing projects. The City has approximately 122 miles of sewer piping, including collection sewers and interceptors. Approximately 79 percent of the existing system is 8-inch-diameter gravity main, totaling approximately 96 miles. **Chapter 2** provides additional history and background on the City's wastewater collection and treatment system.

Existing System (2014)

The hydraulic analysis of the existing collection system indicates that there are several sections of the collection system in the Eastside Interceptor, Juanita, Kirkland, and Yarrow Bay Sewer Drainage Basins that have insufficient capacity at peak hour flows and may need to be upsized.

- In the Eastside Interceptor Sewer Drainage Basin, a portion of the pipelines located along 124th Avenue NE, NE 112th Street, approximately NE 112th Street, Slater Avenue NE, 128th Avenue NE, NE 95th Street, NE 90th Street, Kirkland Avenue, NE 80th Street, NE 70th Street, NE 68th Street, 108th Avenue NE, 120th Avenue NE, and 130th Avenue NE have insufficient capacity at peak hour flows. These projects are included in CIPs SM2, SM7, EX22, EX23, EX48, EX49, EX75, EX133, EX134, EX135, EX136, EX138, EX214, EX215, EX236, EX248, EX269, and EX275, EX320, and EX321.
- In the Juanita Sewer Drainage Basin, a portion of the pipelines located along 98th Avenue NE, NE 108th Street, Forbes Creek Drive, approximately NE 109th Place, 1st Street, and 20th Avenue have insufficient capacity at peak hour flows. These projects are included in CIPs SM3, EX10, EX30, EX38, EX40, EX41, and EX42.
- In the Kirkland Sewer Drainage Basin, a portion of the pipelines located along 6th Street, Waverly Way, Market Street, Central Way, and 3rd Street have insufficient capacity at peak hour flows. These projects are included in CIPs SM6, SM9, EX117, EX142, EX143, EX154, and EX157.
- In the Yarrow Bay Sewer Drainage Basin, a portion of the pipelines located along Lakeview Drive, Lake Washington Boulevard NE, and Northup Way have insufficient capacity at peak hour flows. These projects are included in CIPs EX222, EX289, EX309, and EX319.

Based on the modeling results, there are approximately 19,375 linear feet (LF) of sewer mains that are hydraulically deficient at existing peak hour flows. Improvements to resolve these hydraulic capacity deficiencies, along with other recommended improvements for the City's existing sewer collection system, are included in **Figure 7-1** and the CIP in **Chapter 7**. The flow projections for 2035 were used to establish the proposed pipe diameters for the pipe capacity upgrades. Sewer mains with

insufficient capacity for existing peak flows were scored to prioritize sewer main improvements, discussed further in **Chapter 7**.

2021 (6-year) System Projection

Based on the hydraulic analysis of the system using projected flow rates for 2021, and assuming the improvements to resolve the existing deficiencies will be completed, sections of the collection system in the Eastside Interceptor and Juanita Sewer Drainage Basins will need to be upsized.

- In the Eastside Interceptor Sewer Drainage Basin, a portion of the pipelines located along Slater Avenue NE will need to be upsized. This project is included in CIP DF4.
- In the Juanita Sewer Drainage Basin, a portion of the pipeline located along NE 112th Street will need to be upsized. This project is included in CIP DF3.

Based on the modeling results, there are approximately 675 LF of sewer mains that are hydraulically deficient at projected 2021 peak hour flows. Improvements to resolve these hydraulic capacity deficiencies are included in **Figure 7-2** and the CIP in **Chapter 7**. The pipe size upgrades for the 2021 flow projections were determined based on the capacity of the existing pipes, with improvements to resolve the existing deficiencies completed, being reached at the projected 2021 flow rate. However, the flow projections for 2035 were used to establish the proposed pipe diameters for the pipe capacity upgrades. All of the growth and related improvements for 2021 are necessary to accommodate flow from future developments when constructed.

2035 (20-year) System Projection

Based on the hydraulic analysis of the system using projected flow rates for 2035, and assuming the improvements to resolve the existing and projected 2021 deficiencies will be completed, sections of the collection system in the Eastside Interceptor, Juanita, and Kirkland Sewer Drainage Basins will need to be upsized.

- In the Eastside Interceptor Sewer Drainage Basin, a portion of the pipelines located along NE 97th Street, 124th Avenue NE, NE 95th Street, 128th Avenue NE, and NE 70th Street will need to be upsized. These projects are included in CIP DF7, DF8, DF9, DF10, and DF12.
- In the Juanita Sewer Drainage Basin, a portion of the pipeline located along NE 112th Street will need to be upsized. This project is included in CIP DF6.
- In the Kirkland Sewer Drainage Basin, a portion of the pipeline located along Waverly Way will need to be upsized. This project is included in CIP DF11.

Based on the modeling results, there are approximately 2,950 LF of sewer mains that are hydraulically deficient at projected 2035 peak hour flows. Improvements to resolve these hydraulic capacity deficiencies are included in **Figure 7-3** and the CIP in **Chapter 7**. The pipe size upgrades for the 2035 flow projections were determined based on the capacity of the existing pipes, with improvements to resolve the existing and projected 2021 deficiencies completed, being reached at the projected 2035 flow rate. The flow projections for 2035 were used to establish the proposed pipe diameters for the pipe capacity upgrades. All of the growth and related improvements for 2035 are necessary to accommodate flow from future developments when constructed.

Other Existing Gravity Collection System Deficiencies

The projects listed in the previous sections are a result of the hydraulic modeling effort for 2014, 2021, and 2035. In addition to these projects, City staff desire to repair and rehabilitate other regions of the collection system due to their condition or frequently required maintenance. The 2010 GSP also identified some collection system improvements that have not been implemented yet. These projects are described in CIP SM1 through CIP SM13 and are shown on **Figure 7-1** in **Chapter 7**.

In addition, the City has also compiled databases for the video inspections it has recorded for the existing sewer collection system, shown in **Figure 6-1**, and operations and maintenance (O&M) costs the City has incurred for the years 2010 through 2015, shown in **Figure 6-2**. These databases were used as categories in the scoring for prioritizing sewer main improvements, discussed further in **Chapter 7**.

Inflow and Infiltration Analysis and Deficiencies

Prior to 1962, stormwater systems were commonly connected to the sewer system. In addition, older pipes typically did not have joints with gaskets. Consequently, the sewer system suffered from excessive I/I. I/I increases the volume of flow a sewer system must convey, causing facilities to be sized larger than otherwise necessary. I/I also increases the cost of treating the wastewater at the County facilities. Consequently, if I/I can be located and reduced, the size and cost of improvements and O&M can also be reduced.

As indicated in the I/I section of **Chapter 4**, the County has estimated peak hour I/I flow rates in the City's sewer service area to range from 1,396 to 9,218 gallons per acre per day (gpad), which are relatively high I/I flow rates. These high I/I flow rates indicate that there might be an I/I problem in the City's sewer collection system. There are several projects that are included in the CIP in **Chapter 7** that will address known I/I areas.

Excessive I/I can cause collection system failures and impacts the available capacity in the City's sewer collection system. Therefore, the City should always be aware of the potential for I/I and continue efforts to construct new systems to prevent I/I and maintain existing facilities and pipelines as needed to remove I/I. The City should conduct an I/I study to confirm the areas of the collection system with high I/I and determine cost-effective sewer rehabilitation measures to remove any excessive I/I. This study is addressed in CIP M2, which is discussed further in **Chapter 7**.

Lift Station Capacity Analysis and Deficiencies

The City's existing sewer system has six lift stations. All of the City's existing lift stations were constructed in the last 48 years. **Chapter 2** provides additional history and background on the City's lift stations.

Existing System

The hydraulic analysis of the City's existing lift stations shows that the Lake Plaza and Waverly Park Lift Stations need to be upgraded to accommodate peak flows. Further analysis of the Lake Plaza and Waverly Park Lift Stations are recommended to confirm the capacity of the lift stations and determine what upgrades will be necessary for the lift stations to handle existing and future flows. The capacity upgrades to the Lake Plaza and Waverly Park Lift Stations are discussed further in **Chapter 7**. The hydraulic analysis of the system using existing flow rates indicates there are no other capacity issues

with the City's existing lift stations. All future lift station and related force main improvements are recommended to be designed for 2035 projected flows.

As discussed previously, capacity analyses of the lift station are based on estimated peak hour flows. According to discussions with the system operators, there are no known capacity deficiencies in the City's existing lift stations. Flows at the lift stations should continue to be monitored to determine if influent flow during peak events begins to approach or exceed the pumping capacity of the lift stations.

2021 (6-year) System Projection

Future developer-funded lift station improvements may be required as redevelopment with higher densities occurs within the City's sewer service area. Future developer-funded lift station and related force main improvements are recommended to be designed for 2035 projected flows.

Based on the hydraulic analysis of the lift stations using projected flow rates for 2021, and assuming the improvements to resolve the existing lift station deficiencies will be completed, there will be no additional capacity issues with the City's lift stations by 2021.

2035 (20-year) System Projection

Future developer-funded lift station improvements may be required as redevelopment with higher densities occurs within the City's sewer service area. Future developer-funded lift station and related force main improvements are recommended to be designed for 2035 projected flows.

Based on the hydraulic analysis of the lift stations using projected flow rates for 2035, and assuming the improvements to resolve the existing and projected 2021 lift station deficiencies will be completed, there will be no additional capacity issues with the City's lift stations by 2035.

Other Existing Lift Station Facility Deficiencies

Rose Point Lift Station Upgrades – The Rose Point Lift Station is almost 40 years old and is completely below ground with the exception of a small control panel that stands adjacent to the lift station. The Rose Point Lift Station was planned for relocation/reconstruction in the 2010 GSP due to age-related deterioration and a concern the station has insufficient pumping capacity to hydraulically pass peak flows during major storm events. A replacement for the Rose Point Lift Station is anticipated to have construction completed by the end of 2017.

The lift station improvements include a new wetwell/valve vault layout, control system, and emergency generator set. Construction of the proposed lift station will involve reusing the existing wetwell and converting the drywell to emergency offline storage. This improvement is addressed in CIP F1, which is discussed further in **Chapter 7**.

Trend Lift Station – The Trend Lift Station is almost 50 years old, but is generally in good working order. However, removing the lift station from service will reduce the City's O&M costs. It is recommended that this lift station be decommissioned and a gravity line from a manhole upstream of the Trend Lift Station be routed to one of three locations: south to another part of the City's existing sewer system; north to Northshore Utility District's existing sewer system; or east to the City of Redmond's existing sewer system through a developer extension. This improvement is addressed in CIP F2, which is discussed further in **Chapter 7**.

For modeling purposes, it was assumed that the Trend Lift Station would remain in operation to be conservative when determining downstream pipe capacities.

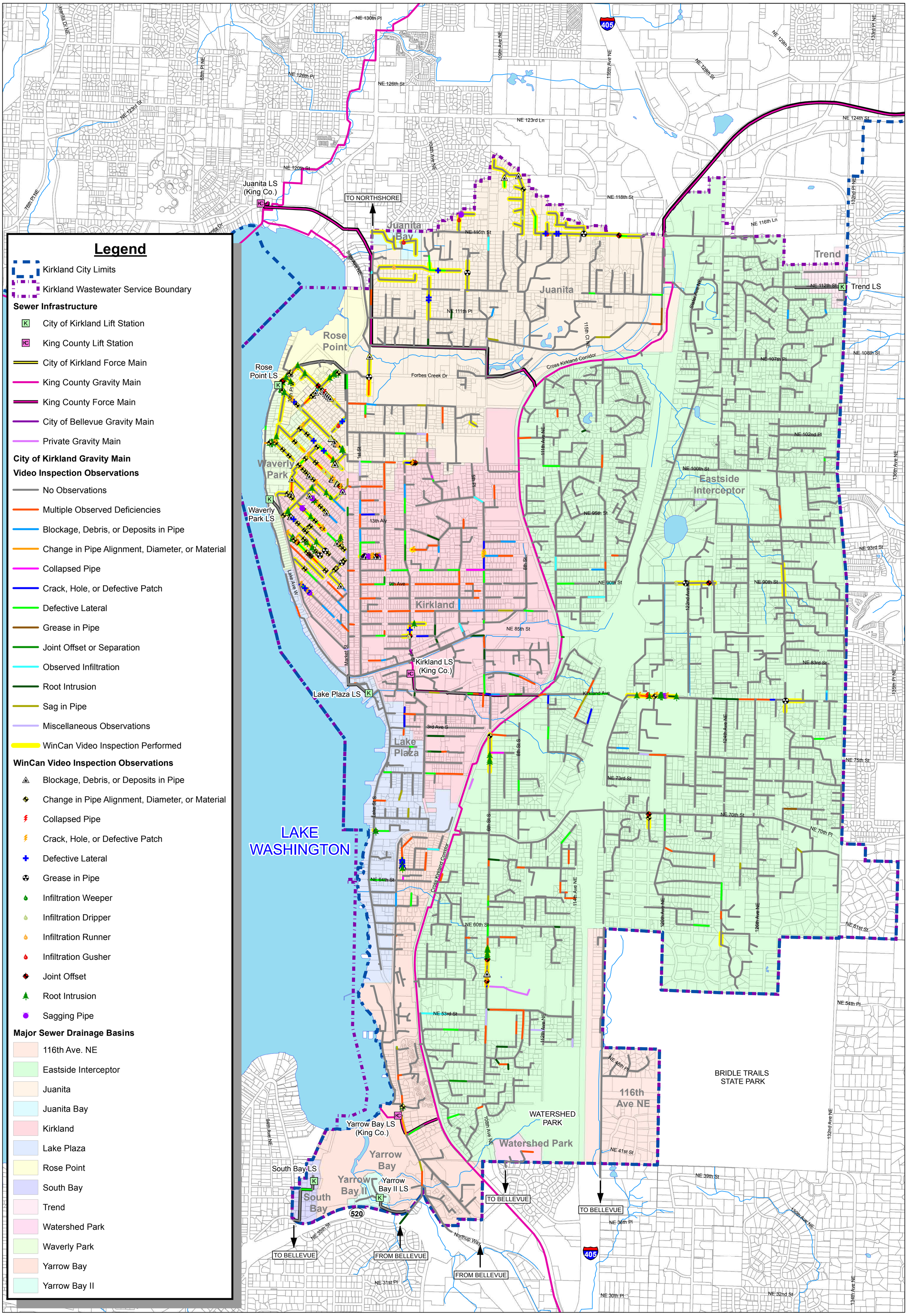

COORDINATE SYSTEM: NAD 1983 HARN STATEPLANE WASHINGTON NORTH FIPS 4601 FEET

RH2 ENGINEERING

NORTH

1 inch = 1,000 feet

0 500 1,000 2,000 Feet

DRAWING IS FULL SCALE WHEN BAR MEASURES 2"

CITY OF KIRKLAND WASHINGTON

Figure 6-1
Video Inspection Observations
City of Kirkland General Sewer Plan

Vicinity Map

This map is a graphic representation derived from the City of Kirkland Geographic Information System. It was designed and intended for City of Kirkland staff use only; it is not guaranteed to survey accuracy. This map is based on the best information available on the date shown on this map.

Any reproduction or sale of this map, or portions thereof, is prohibited without express written authorization by the City of Kirkland.

This material is owned and copyrighted by the City of Kirkland.

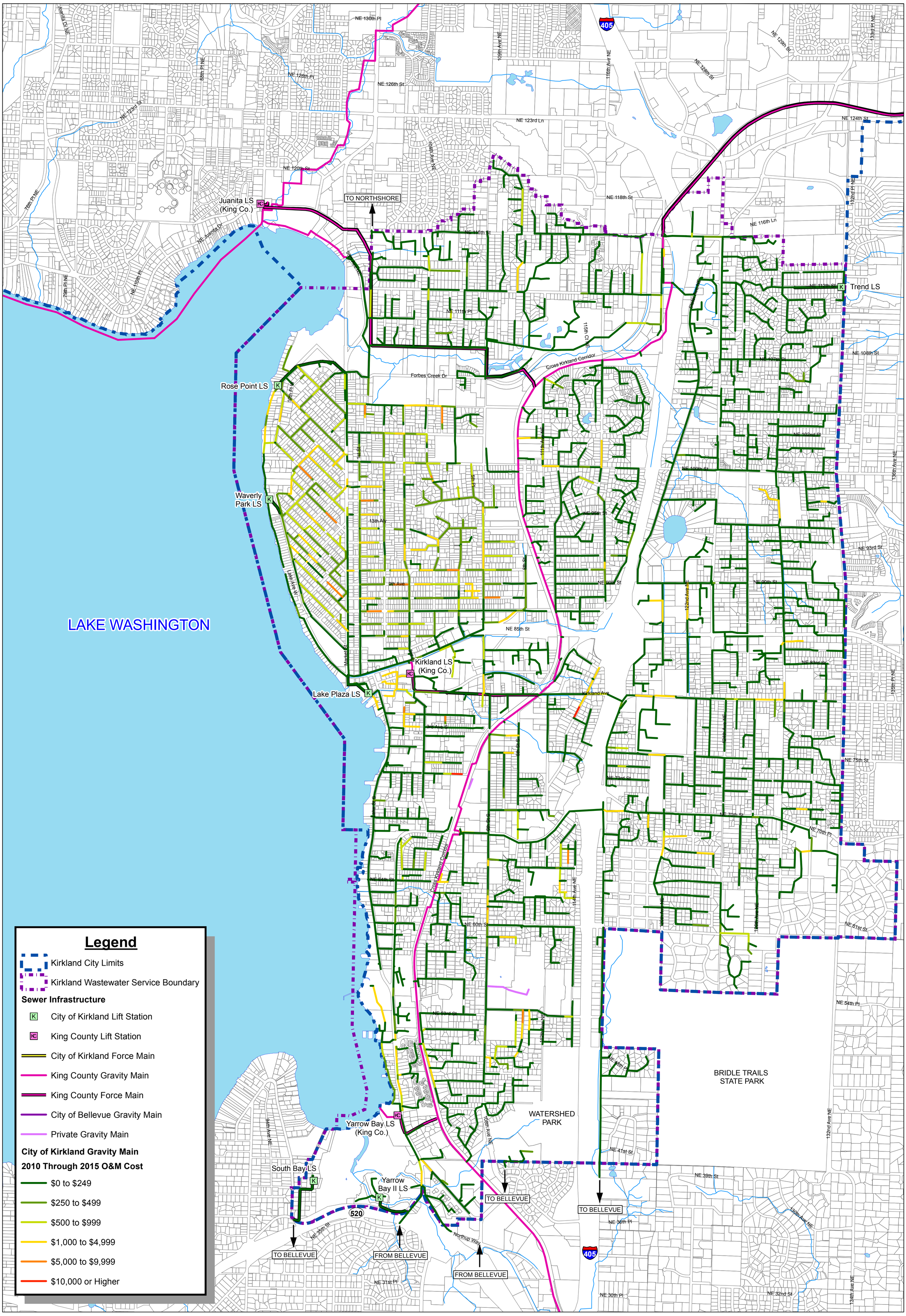

COORDINATE SYSTEM: NAD 1983 HARN STATEPLANE WASHINGTON NORTH FIPS 4601 FEET

RH2 ENGINEERING

NORTH

1 inch = 1,000 feet

0 500 1,000 2,000 Feet

DRAWING IS FULL SCALE WHEN BAR MEASURES 2"

CITY OF KIRKLAND WASHINGTON

Figure 6-2
2010 Through 2015 Sewer O&M Cost
City of Kirkland General Sewer Plan

Vicinity Map

This map is a graphic representation derived from the City of Kirkland Geographic Information System. It was designed and intended for City of Kirkland staff use only; it is not guaranteed to survey accuracy. This map is based on the best information available on the date shown on this map.

Any reproduction or sale of this map, or portions thereof, is prohibited without express written authorization by the City of Kirkland.

This material is owned and copyrighted by the City of Kirkland.

Capital Improvement Plan

7

INTRODUCTION

This chapter presents proposed improvements to the City of Kirkland's (City) sewer system that are necessary to resolve existing system deficiencies and plan for the projected sewer customer growth. The sewer system improvements were identified from an evaluation of the results of the system analyses presented in **Chapter 6**. The sewer system improvements were sized to meet the system's existing and future demand conditions.

A Capital Improvement Plan (CIP) number has been assigned to each improvement, as shown in **Figures 7-1**, **7-2**, and **7-3**. The improvements are organized and presented in this chapter according to the following primary categories.

- Existing System Improvements
- 2021 (6-year) System Improvements
- 2035 (20-year) System Improvements

Improvements for gravity collection piping, lift stations, force mains, and miscellaneous projects are listed under each of the three primary categories. The remainder of this chapter presents a brief description of each group of improvements, the criteria for prioritizing, the basis for the cost estimates, and the schedule for implementation.

For planning purposes, the improvement projects described herein are based on one alternative route or conventional concept for providing the necessary improvement. Other methods of achieving the same result, such as obtaining flow capacity increases by adding one large gravity main versus using multiple gravity pipes, force main/gravity main combinations, or multiple force mains, should be considered during predesign to ensure the best and lowest cost alternative design is selected. Further evaluation should be performed when more information is available regarding when and where future developments will occur.

DESCRIPTION OF IMPROVEMENTS

This section provides a general description of each group of improvements and an overview of the deficiencies they will resolve. Some of the improvements are necessary to resolve existing system deficiencies.

The CIP numbers for recommended improvements to the existing sewer mains that were identified prior to this General Sewer Plan (GSP) (i.e., they were identified in the 2010 GSP prepared by Roth Hill, LLC, and/or the City's CIP) have an "SM" prefix (example: SM1 – 6th Street S Sewer Main Replacement). The City has commenced planning for the "SM" improvements and some of them are already in the design or construction phase.

The CIP numbers for recommended improvements to the existing sewer mains that were identified in this GSP, but not identified prior to this GSP, have an "EX" prefix (example: EX1 – NE 118th Street Sewer Main Replacement). These "EX" improvements are all identified under SM14 (Annual Sanitary Pipeline Replacement Program).

The CIP numbers for recommended improvements to existing facilities, such as lift stations and force mains, have an "F" prefix (example: F1 – Rose Point Sewer Lift Station Replacement). The CIP numbers for recommended planning studies have an "M" prefix (example: M2 – Inflow and Infiltration Study).

Some improvements will be necessary to serve areas in the City's sewer service area that will be redeveloped with higher densities. The major pipe and facility improvements that will be required when development occurs in these areas are considered to be developer-funded projects. The CIP numbers for developer-funded improvements have a "DF" prefix (example: DF1).

Additional projects include localized on-site sewer main improvements that are not associated with the existing overall sewer collection/interceptor system but will be necessary when the property served by the sewer system is redeveloped or expanded. The costs associated with all these improvements shall be borne by the developers, rather than the existing sewer customers. The locations of improvements in the unsewered areas are not shown, as they will be designed in the future to fit those neighborhoods as the sewer system is extended.

The required capacity and timing of each recommended improvement is provided for budgeting and financial projection purposes only. The actual design parameters should be evaluated at the design phase of the project, using the hydraulic model or another accepted engineering procedure. Updated population, employee, and flow data should be used when available to ensure the proposed facilities are adequately sized to handle build-out flows.

All the projections presented in this GSP will be completed in accordance with the City's construction standards.

Existing System Improvements

The following improvements were identified by City staff, from the results of the system analyses, from previously prepared CIPs, as discussed in **Chapter 6**. These improvements are necessary to serve the existing sewer service area. The improvements include the major pipeline and facility construction that is required to properly serve the existing sewer service area. The improvement costs shall be borne by the existing customers, unless over-sizing of the improvements provides a benefit to developers.

The existing improvements are based on existing peak hour flow rates; however, the proposed pipe diameters for recommended replacement pipelines are based on the peak hour flow projections for 2035. The existing system improvements are illustrated in **Figure 7-1**. RH2 Engineering, Inc.'s analysis shows the best apparent replacement alignment based on information currently available. A variety of alternatives are possible for the CIP projects listed, and alternatives should and will be considered during the design of each project.

CIP SM1: 6th Street S Sewer Main Replacement

City's Existing Project No.: SS 0051
Estimated Cost: $965,000
Proposed Years: 2017 through 2018

Deficiency: This deficiency was identified in the City's 2010 GSP. The sewer collection system in the Eastside Interceptor Sewer Drainage Basin along 6th Street S between NE 68th Street and approximately 8th Avenue S has a flow capacity deficiency currently, shown on **Figure 7-1**.

Improvement: The 2010 GSP identified that approximately 950 linear feet (LF) of 8- and 10-inch concrete gravity sewer main needs to be replaced along 6th Street S between NE 68th Street and approximately 8th Avenue S. A preliminary design investigation should be performed to evaluate the feasibility of replacing the existing sewer main utilizing trenchless construction methods versus replacing the existing sewer main utilizing open-cut methods with 15-inch polyvinyl chloride (PVC) pipe.

CIP SM2: 108th Avenue NE Sewer Main Replacement

City's Existing Project No.: SS 0052
Estimated Cost: $5,506,000
Proposed Years: 2018 through 2020

Deficiency: This deficiency was identified in the City's 2010 GSP. The sewer collection system in the Eastside Interceptor Sewer Drainage Basin along 108th Avenue NE between NE 68th Street and NE 53rd Street is concrete pipe that has significant structural deficiencies that require higher maintenance and a flow capacity deficiency, shown on **Figure 7-1**.

Improvement: The 2010 GSP identified that approximately 4,000 LF of 8-inch concrete gravity sewer main needs to be replaced and/or rehabilitated along 108th Avenue NE between NE 68th Street and NE 53rd Street. A preliminary design investigation should be performed to evaluate the feasibility of rehabilitating the existing sewer main versus the need to replace the existing sewer main with 8- to 12-inch PVC.

CIP SM3: NE 108th Street Sewer Main Replacement

City's Existing Project No.: SS 0062
Estimated Cost: $6,569,500
Proposed Years: 2020 through 2021

Deficiency: This deficiency was identified in the City's 2010 GSP. The sewer collection system in the Juanita Sewer Drainage Basin along NE 108th Street between approximately Forbes Creek at 100th Avenue NE and 108th Avenue NE is concrete and ductile iron (DI) pipe that has significant infiltration and inflow (I/I) and has a flow capacity deficiency, shown on **Figure 7-1**.

Improvement: The 2010 GSP identified that approximately 3,000 LF of 8- and 12-inch concrete and DI gravity sewer main needs to be replaced and/or rehabilitated along NE 108th Street between approximately Forbes Creek at 100th Avenue NE and 108th Avenue NE. A preliminary design investigation should be performed, which would include video inspection, to evaluate the feasibility of rehabilitating the existing sewer main versus the need to replace the existing sewer main with 15- to 18-inch PVC pipe.

CIP SM4: 1st Street Sewer Main Replacement

City's Existing Project No.: SS 0069
Estimated Cost: $3,820,000
Proposed Years: 2016 through 2017

Deficiency: This deficiency was identified in the City's 2010 GSP. The sewer collection system in the Kirkland Sewer Drainage Basin along 1st Street between Central Way and 16th Avenue, shown on **Figure 7-1**, is concrete and PVC pipe. The concrete sewer pipe was installed prior to 1950, has

exceeded its design life, and is deteriorating. In addition, some of the sewer mains have a 6-inch diameter, which is smaller than the current minimum requirement of 8 inches.

Improvement: The 2010 GSP identified that approximately 4,170 LF of 6- and 8-inch concrete and PVC gravity sewer main needs to be replaced along 1st Street between Central Way and 16th Avenue with 8-inch PVC pipe.

CIP SM5: 5th Street Sewer Main Replacement

City's Existing Project No.: SS 0070
Estimated Cost: $1,284,000
Proposed Years: 2016 through 2017

Deficiency: This deficiency was identified in the City's 2010 GSP. The sewer collection system in the Kirkland Sewer Drainage Basin along 5th Street between Central Way and 9th Avenue, shown on **Figure 7-1**, is concrete and PVC pipe. The concrete sewer pipe was installed prior to 1950, has exceeded its design life, and is deteriorating.

Improvement: The 2010 GSP identified that approximately 1,430 LF of 8- and 12-inch concrete and PVC gravity sewer main needs to be replaced along 5th Street between Central Way and 9th Avenue with 8- and 12-inch PVC pipe.

CIP SM6: 6th Street Sewer Main Replacement

City's Existing Project No.: SS 0071
Estimated Cost: $287,000
Proposed Year: 2016

Deficiency: This deficiency was identified in the City's 2010 GSP. The sewer collection system in the Kirkland Sewer Drainage Basin along 6th Street between 10th Avenue and 11th Avenue is concrete pipe that has a flow capacity deficiency currently, shown on **Figure 7-1**. The concrete sewer pipe was installed prior to 1950 and has a 6-inch diameter, which is smaller than the current minimum requirement of 8 inches.

Improvement: The 2010 GSP identified that approximately 325 LF of 6-inch concrete gravity sewer main needs to be replaced along 6th Street between 10th Avenue and 11th Avenue with 8-inch PVC pipe.

CIP SM7: Kirkland Avenue Sewer Main Replacement

City's Existing Project No.: SS 0072
Estimated Cost: $2,298,400
Proposed Year: 2018 though 2019

Deficiency: This deficiency was identified in the City's 2010 GSP. The sewer collection system in the Eastside Interceptor Sewer Drainage Basin along Kirkland Avenue NE between the Cross Kirkland Corridor and Interstate 405 (I-405) is concrete pipe that has a flow capacity deficiency for peak hour flow projections, shown on **Figure 7-1**.

Improvement: The 2010 GSP identified that approximately 1,550 LF of 8-inch concrete gravity sewer main needs to be replaced along Kirkland Avenue NE between the Cross Kirkland Corridor and I-405 with 12-inch PVC pipe.

CIP SM8: 3rd Avenue S and 2nd Street S Sewer Main Replacement

City's Existing Project No.: SS 0079
Estimated Cost: $361,600
Proposed Year: 2016

Deficiency: This deficiency was identified in the City's CIP. The sewer collection system in the Kirkland Sewer Drainage Basin along 2nd Street S between 1st Avenue S and 3rd Avenue S and along 3rd Avenue S between 2nd Street S and State Street S is 6-inch concrete pipe that was installed prior to 1950, shown on **Figure 7-1**.

Improvement: Approximately 780 LF of 6-inch concrete gravity sewer main needs to be replaced along 2nd Street S between 1st Avenue S and 3rd Avenue S and along 3rd Avenue S between 2nd Street S and State Street S with 8-inch PVC pipe.

Note: This project was finished in early 2017, during completion of this GSP update.

CIP SM9: 3rd and Central Way Sanitary Sewer Crossing

City's Existing Project No.: SS 0082
Estimated Cost: $300,000
Proposed Year: 2016

Deficiency: This deficiency was identified in the City's CIP. The sewer collection system in the Kirkland Sewer Drainage Basin that crosses Central Way near the intersection of Central Way and 3rd Street is DI and PVC pipe that has a flow capacity deficiency currently, shown on **Figure 7-1**.

Improvement: Approximately 90 LF of 24-inch DI and PVC gravity sewer main needs to be replaced near the intersection of Central Way and 3rd Street with 30-inch pipe. The sewer main for this project may have limited cover, so the pipe may need to be DI. In addition, the existing manholes in the project vicinity may need to be replaced with manholes that have a greater than 48-inch diameter to accommodate the larger sewer mains.

Note: During the completion of this GSP update, additional survey and modeling suggested the existing pipe provides sufficient capacity for this planning period and this CIP was removed from the City's adopted CIP. For continuity, this CIP is shown in this chapter and **Table 7-2**.

CIP SM10: West of Market Sewer Main Replacement

City's Existing Project No.: SS 0077
Estimated Cost: $21,681,000
Proposed Years: 2020 through 2030

Deficiency: This deficiency was identified in the City's 2010 GSP. The sewer collection system in the Market Neighborhood, from Market Street to Lake Washington and from Waverly Way to Forbes Creek Drive, is composed of concrete, PVC, asbestos cement (AC), and DI sewer pipes. Most of the sewer mains in the Market Neighborhood are concrete pipe that was installed prior to 1950, has exceeded its design life, and has excessive I/I. In addition, some of the sewer mains have a 6-inch diameter, which is smaller than the current minimum requirement of 8 inches. This project is located in the Juanita, Kirkland, Lake Plaza, Rose Point, and Waverly Park Sewer Drainage Basins, shown on **Figure 7-1**.

Improvement: The 2010 GSP identified that approximately 45,000 LF of 6- to 12-inch gravity sewer main in the Market Neighborhood, from Market Street to Lake Washington and from Waverly Way to Forbes Creek Drive, needs to be rehabilitated and/or replaced with 8- to 12-inch PVC.

CIP SM11: Annual Sewer Critical Areas Ordinance/Surface Water Design Manual Support

City's Existing Project No.: SS 7777
Estimated Cost: $700,000
Proposed Years: 2017

Deficiency: This deficiency was identified in the City's CIP. The City changed its design and construction requirements for City right-of-way capital projects with the 2016 City updates to Critical Areas Ordinance (CAO) Codes (Kirkland Municipal Code Chapters 83, 85, and 90) and the 2016 City adoption of the April 24, 2016, King County, Washington, *Surface Water Design Manual* (SWDM).

Improvement: Provide for the additional design and construction costs for City right-of-way capital projects to comply with the requirement changes of the 2016 City updates to CAO Codes (Kirkland Municipal Code Chapters 83, 85, and 90) and the 2016 City adoption of the April 24, 2016, King County, Washington, SWDM.

CIP SM12: Annual Sanitary Pipeline Replacement Program

City's Existing Project No.: SS 8888
Estimated Cost: $1,333,200
Proposed Years: 2021 through 2022

Deficiency: This deficiency was identified in the City's CIP. A large portion of the City's sewer collection system contains concrete and asbestos cement sewer main that is old and prone to problems. In addition, some areas of the City's sewer collection system have higher maintenance requirements. The City desires to replace sewer pipelines, as necessary, to improve overall system reliability and reduce maintenance costs for the sewer collection system.

Improvement: Replacement of sewer pipelines, as necessary, to improve overall system reliability and reduce maintenance costs.

CIP SM13: Annual Sanitary Pump Station/System Upgrade Program

City's Existing Project No.: SS 9999
Estimated Cost: $1,333,200
Proposed Years: 2021 through 2022

Deficiency: This deficiency was identified in the City's CIP. The City desires to install sewer pump station upgrades, as necessary, to improve overall system reliability and reduce maintenance costs for the pump stations.

Improvement: Installation of sewer pump station upgrades, as necessary, to improve overall system reliability and reduce maintenance costs.

CIP SM14: Annual Sanitary Pipeline Replacement Program

Total Estimated Cost: $236,363,000
Proposed Years: 2023 through 2060

Deficiency: The sewer collection system has additional deficiencies other than the deficiencies that are identified in CIP SM1 through CIP SM13, shown on **Figure 7-1**. These deficiencies include, but are not limited to, sewer mains that have a flow capacity deficiency currently according to the hydraulic model, have exceeded their design life and are constructed of a material that could be deteriorating (such as concrete and AC), and/or a 6-inch diameter, which is smaller than the current minimum requirement of 8 inches.

Improvement: This CIP includes all recommended improvements to the existing sewer mains that were not identified prior to this GSP, which are listed as CIP EX2 through CIP EX322. Approximately 275,000 LF of gravity sewer main needs to be replaced and/or rehabilitated in the City's sewer collection system. These projects are presented in **Tables 7-2** and **7-3** (located at the end of this chapter) with their priority ranking, which is discussed in the **Prioritizing Improvements** section of this chapter.

Note, CIP EX1 was removed as this improvement is located in the area that was acquired by the Northshore Utility District in 2017 (NE 124th Street Sewer Drainage Basin). Costs for this project were omitted from this chapter.

CIP F1: Rose Point Sewer Lift Station Replacement

City's Existing Project No.: SS 0073
Estimated Cost: $1,110,000
Proposed Year: 2016

Deficiency: This deficiency was identified in the City's 2010 GSP. The Rose Point Lift Station is almost 40 years old and completely below ground, with the exception of a small control panel that stands adjacent to the lift station. The Rose Point Lift Station was planned for relocation/reconstruction in the 2010 GSP due to age-related deterioration and a concern the station has insufficient pumping capacity to hydraulically pass peak flows during major storm events. A replacement for the Rose Point Lift Station is currently being designed and is anticipated to be constructed in 2016.

Improvement: Replace the existing lift station. The proposed lift station will include a new wetwell/valve vault layout, control system, and emergency generator set. Construction of the proposed lift station will involve reusing the existing wetwell and converting the drywell to emergency, off-line storage.

CIP F2: Trend Lift Station Abandonment

Estimated Cost: $3,551,000
Proposed Years: 2023 through 2025

Deficiency: This deficiency was identified in the City's 2010 GSP. The Trend Lift Station is almost 50 years old and nearing the end of its design life. This lift station does not have an on-site engine generator for standby power and has an old RUGID system for telemetry. In addition, elimination of the lift station reduces the burden on the operation and maintenance staff. The installation of a gravity

sewer line from the Trend Lift Station to existing gravity sewer main will eliminate the need for the Trend Lift Station.

Improvement: Construct 8-inch gravity sewer pipe to convey sewer flows from the Trend Sewer Drainage Basin to existing gravity sewer main. The City currently has three alternatives for rerouting sewer flows that it will consider when abandoning the Trend Lift Station.

1. Install approximately 4,300 LF of gravity sewer main from Trend Lift Station south and connect to the City's existing sewer system near the intersection of NE 100th Street and 132nd Avenue NE. If this alternative is implemented, this CIP item should be completed after CIP EX22, EX48, EX75, EX135, and EX136.
2. Install approximately 3,300 LF of gravity sewer main from the Trend Lift Station north and connect to Northshore Utility District's (Northshore) existing sewer system near the intersection of NE 120th Street and 132nd Avenue NE. An interlocal agreement with Northshore would be required and additional improvements in Northshore's sewer system may be needed to implement this alternative.
3. Install approximately 800 LF of gravity sewer main from the Trend Lift Station north or south as necessary and connect to the City of Redmond's (Redmond) existing sewer system through a developer extension along 132nd Avenue NE near the Trend Lift Station. There is currently a development under construction at the intersection of NE 110th Place and 132nd Avenue NE and another development being considered east of the intersection of NE 112th Place and 132nd Avenue NE that could be connected to. An interlocal agreement with Redmond would be required and additional improvements in Redmond's sewer system may be needed to implement this alternative.

The Trend Lift Station can be abandoned after sewer flows are rerouted from the lift station. If CIP F2 is constructed, CIP EX23 may not be necessary.

If the second alternative is implemented, additional CIP projects will likely be necessary to increase the capacity of some of the sewer mains in the Eastside Interceptor Sewer Drainage Basin between the proposed discharge location (near the intersection of NE 120th Street and 132nd Avenue NE) and the corresponding connection to King County's (County) Eastside Interceptor.

The cost for this CIP was estimated based on the first alternative, which is estimated to have the highest capital cost of the three alternatives presented for the sewer mains needed to redirect sewer flows from the Trend Sewer Drainage Basin to the new discharge location. The estimated cost for this CIP does not account for any additional improvements that may be necessary to convey sewer flows from the proposed discharge locations to the corresponding connection to the County's sewer system.

CIP F3: Waverly Park Lift Station Improvements

Estimated Cost: $1,178,000
Proposed Years: 2023 through 2025

Deficiency: The Waverly Park Lift Station has a firm capacity of approximately 285 gallons per minute (gpm). This is insufficient for the estimated existing peak hour flow, and the pumping capacity could be exceeded during a 20-year storm peak hour event, as described in **Chapter 4**.

Improvement: Upgrade the lift station capacity so it can handle at least approximately 330 gpm. The Waverly Park Lift Station was constructed in 2005 and is generally in good condition. The design

capacity of this lift station is 320 gpm. Additional pump testing should be performed to evaluate if the firm capacity of this lift station is actually greater than what the City determined it was during the drawdown tests performed as part of this GSP update. These improvements will include replacement of both pumps at the lift station, electrical gear to handle larger horsepower pumps, and the on-site generator. The scope and cost for these improvements may be reduced depending on the improvements that are necessary to increase the capacity of this lift station.

CIP M1: Reclaimed Water (Purple Pipe) Opportunity Fund

City's Existing Project No.: SS 0084
Estimated Cost: $5,000,000
Proposed Years: 2030 through 2035

Deficiency: Reclaimed water, also commonly referred to as recycled water, from the County's recently constructed Brightwater Treatment Plant could be utilized in the future as a potential water source for non-potable purposes in the City, such as street cleaning, sewer main flushing, and irrigation.

Improvement: Reclaimed water from the Brightwater Treatment Plant could be conveyed to the City in the future through a transmission main in the Eastside Rail Corridor and/or the Cross Kirkland Corridor. The City is a member of the Cascade Water Alliance (Cascade) and is currently provided water supply under a contract between Seattle Public Utility (SPU) and Cascade. Cascade is currently partnered with the County to perform a reclaimed water feasibility study in and near the Sammamish Valley Corridor. Cascade is working with the County to adjust some of the reclaimed water laws and guidelines, so the County could potentially provide reclaimed water from the Brightwater Treatment Plant to members of Cascade in areas where reclaimed water makes sense. As a member of Cascade, the City is participating in this coordinated effort. As part of this effort, the City has identified a list of potential reclaimed water user in the City's water service area (**Appendix I**), which includes the top 20 water users and top 10 irrigation users in the City's water service area.

CIP M2: Inflow and Infiltration Study

Estimated Cost: $250,000
Proposed Years: 2023 through 2025

Deficiency: This deficiency was identified in the City's 2010 GSP. As indicated in the I/I section of **Chapter 4**, the County has estimated peak hour I/I flow rates in the City's sewer service area to range from 1,396 to 9,218 gallons per acre per day (gpad), which are relatively high I/I flow rates. These high I/I flow rates indicate that there is a substantial I/I problem in the City's sewer collection system. The areas with the highest peak hour I/I flow rates include the downtown area and sections of the City's sewer service area adjacent to Lake Washington and Yarrow Bay; the areas with the lowest peak hour I/I flow rates include the eastern and northern regions of the City's sewer system.

Improvement: It is recommended that the City conduct an I/I study on its sewer collection system to confirm the results of the County's I/I evaluation and locate the affected collection system areas to determine cost-effective sewer rehabilitation measures to remove excessive I/I. This program will work towards eliminating sources of I/I, replacing or refurbishing mains, manholes, and service lines, and disconnecting in-flow sources.

Approximately $75,000 should be allocated to in-stream flow monitoring for this I/I study. As part of this I/I study, additional hydraulic analyses should be performed with this flow monitoring data

using a more sophisticated, fully dynamic hydraulic modeling program, such as EPA-SWMM, to more accurately determine the locations of high I/I and if they can be cost-effectively rehabilitated. A fully dynamic hydraulic modeling program will provide a more accurate representation of flows in the City's sewer collection system during peak hour conditions by incorporating processes such as flow attenuation. A fully dynamic hydraulic modeling program may show that some of the CIP projects identified in this GSP to resolve sewer main and lift station capacity deficiencies are not necessary.

CIP M3: General Sewer Plan Update

Estimated Cost: $600,000
Proposed Years: 2025, 2035, 2045, and 2055

Deficiency: The City's GSP should be updated every 10 years.

Improvement: The City will update its GSP every 10 years. In addition, the City may elect to perform a review of the GSP at the 5-year mark and adjust the projections and improvements as necessary.

2021 System Improvements

The 2021 improvements were identified from the results of the system analyses discussed in **Chapter 6**. All these improvements are the result of projected capacity deficiencies based on 2021 peak hour flow projections. These improvements will be necessary to serve areas that are anticipated to redevelop with higher densities in the City's sewer service area. The improvements include the major pipeline and facility construction that will be required to properly serve these areas. The improvement costs shall be borne by the developers, rather than the existing customers, unless over-sizing of the improvements provides benefit to the existing customers. Additional developer-funded projects that are not described in this section would include localized, on-site improvements that are not associated with overall collection systems outside of the property being developed but would be necessary to serve the interior portions of the development area.

The pipe diameter upgrades for the 2021 peak hour flow projections are scheduled based on 2021 flow rate exceeding the capacity of the existing pipes. However, the proposed pipe diameters for the pipe capacity upgrades are based on the peak hour flow projections for 2035. The 2021 improvements are based on the assumption that the existing improvements are complete. The 2021 system improvements are illustrated in **Figure 7-2**. A variety of alternatives are possible for the CIP projects listed, and further evaluation should be performed when more information is available regarding when and where future developments will occur.

CIP DF1: Lake Plaza Lift Station Improvements

Estimated Cost: $1,257,000

Deficiency: The Lake Plaza Lift Station has a firm capacity of approximately 1,157 gpm. This is insufficient for the estimated existing peak hour flow, and the pumping capacity could be exceeded during a 20-year storm peak hour event, as described in **Chapter 4**.

Improvement: Upgrade the lift station capacity so it can handle at least approximately 1,390 gpm. The Lake Plaza Lift Station was constructed in 1997 and is generally in good condition. The design capacity of each pump at this lift station is 750 gpm. Additional pump testing should be performed to evaluate if the firm capacity of this lift station is actually greater than what the City determined it was during the drawdown tests performed as part of this GSP update. These improvements will include replacement of all three pumps at the lift station, electrical gear to handle larger horsepower pumps,

and the on-site generator. The scope and cost for these improvements may be reduced depending on the improvements that are necessary to increase the capacity of this lift station.

CIP DF3 through CIP DF4: 2021 Developer-funded Improvements

Total Estimated Cost: $785,000

Deficiency: The capacity of some of the City's sewer mains will be exceeded if residential, commercial, and industrial growth occur as projected, as shown on **Figure 7-2**.

Improvement: These CIP projects include all the developer-funded sewer main improvements recommended based on the 2021 flow projections. Replace approximately 675 LF of existing gravity sewer mains with larger diameter pipe, as shown in **Table 7-2** (located at the end of this chapter).

Note, CIP DF2 was removed as this improvement is located in the area that was acquired by the Northshore Utility District in 2017 (NE 124th Street Sewer Drainage Basin). Costs for this project were omitted from this chapter.

2035 System Improvements

The 2035 improvements were identified from the results of the system analysis discussed in **Chapter 6**. All these improvements are the result of projected capacity deficiencies based on 2035 peak hour flow projections. These additional improvements will be necessary to serve areas that are anticipated to redevelop with higher densities in the City's sewer service area. The improvements include the major pipeline and facility construction that will be required to properly serve the system. The improvement costs shall be borne by the developers, rather than the existing customers, unless over-sizing of the improvements provides benefit to the existing customers. Additional developer-funded projects that are not described below would include localized on-site improvements that are not associated with the overall collection system outside of the property being developed but would be necessary to serve the interior portions of the development area.

The 2035 improvements are based on the 2035 peak hour flow rate projections and the assumption that the 2021 improvements are complete. The additional system improvements required for 2035 are illustrated in **Figure 7-3**. A variety of alternatives are possible for the CIP projects listed. Further evaluation should be performed when more information is available regarding when and where future developments will occur.

CIP DF6 through CIP DF12: 2035 Developer-funded Improvements

Total Estimated Cost: $2,634,000

Deficiency: The capacity of some of the City's sewer mains will be exceeded if residential, commercial, and industrial growth occur as projected, as shown on **Figure 7-3**.

Improvement: These CIP projects include all the developer-funded sewer main improvements recommended based on the 2035 flow projections. Replace approximately 2,950 LF of existing gravity sewer mains with larger diameter pipe, as shown in **Table 7-2** (located at the end of this chapter).

Note, CIP DF5 was removed as this improvement is located in the area that was acquired by the Northshore Utility District in 2017 (NE 124th Street Sewer Drainage Basin). Costs for this project were omitted from this chapter.

ESTIMATING COSTS OF IMPROVEMENTS

Project costs for the proposed improvements were estimated based on costs of similar, recently constructed sewer projects in the City and around the Puget Sound area, are presented in 2017 dollars, and do not include future escalation. The costs were developed from a combination of recent bids on construction projects, vendor quotes, cost curves, scale-up and scale-down factors, and size and cost comparisons with similar projects. These project costs are developed for guidance in project evaluation from information available at the time of preparation. Additional costs were included for projects located partially in or within 50 feet of a wetland. No costs are included for extraordinary circumstances, such as potential discovery and remediation of contaminated materials or actions that may be required to address the existence of cultural artifacts. The project costs presented in the CIP are capital cost estimates, and do not represent life-cycle cost estimates.

The cost estimates include the estimated construction cost of the improvement, construction contingency, 10.0 percent sales tax, and indirect costs estimated at 35 percent of the construction cost for engineering preliminary design, final design, construction management services, permitting, and legal and administrative services.

Cost estimates for projects in the CIP are considered to be Class 5 estimates, based on standards established by the American Association of Cost Engineers (AACE). Class 5 estimates are described as generally being prepared with very limited information and subsequently have wide accuracy ranges. The typical accuracy range for this cost estimate class is from -20 percent to -50 percent on the low side and from +30 percent to +100 percent on the high side. Class 5 estimates are prepared for any number of strategic business planning purposes including, but not limited to, market studies, assessment of initial viability, evaluation of alternate schemes, project screening, project location studies, evaluation of resource needs and budgeting, long-range capital planning, etc.

The final cost of the projects will depend on actual labor and material costs, actual site conditions, productivity, competitive market conditions, final project scope, final project schedule, and other variable factors. As a result, the final project costs will likely vary from those presented. Because of these factors, funding needs must be carefully reviewed prior to making specific financial decisions or establishing final budgets.

PRIORITIZING IMPROVEMENTS

Sewer Main Improvements

The recommended existing sewer main improvements that were identified prior to this GSP (i.e., the improvements identified under CIP SM1 through CIP SM13) were prioritized by the City based on the perceived need for the improvement to be completed prior to projects with fewer deficiencies or less risk of damage due to failure of the system. The recommended existing collection system improvements that were not identified prior to this GSP (i.e., the improvements identified under CIP SM14) were prioritized based on the criteria presented in this section to identify projects with the most deficiencies and greatest need for improvement.

Table 7-1 lists criteria that were established for prioritizing the sewer main improvements. The criteria are based on the severity of the physical and capacity deficiencies of the existing sewer mains. The criteria are arranged in eight different categories with a weight factor assigned to each category. The

Existing Peak Hour Flow (PHF) Pipe Capacity, Video Inspection Results, and Historical Operations and Maintenance (O&M) Costs categories were given the most weight.

Table 7-1
Sewer Main Improvements Priority Ranking Criteria

Score	Category	Weight Factor	Weighted Score
	Existing PHF Pipe Capacity		
5	Ex. PHF is 100% or Higher of Pipe Capacity or 6-inch Diameter Gravity Main	3	15
4	Ex. PHF is 95% to 99% of Pipe Capacity	3	12
3	Ex. PHF is 90% to 94% of Pipe Capacity	3	9
2	Ex. PHF is 85% to 89% of Pipe Capacity	3	6
1	Ex. PHF is 80% to 84% of Pipe Capacity	3	3
0	Ex. PHF is Less Than 80% of Pipe Capacity	3	0
	Video Inspection Results		
5	Collapsed Pipe	3	15
4	Crack, Hole, Surface Spalling, or Defective Patch	3	12
3	Observed Infiltration	3	9
2	Blockage, Debris, or Deposits in Pipe Grease in Pipe Joint Offset or Separation Root Intrusion Sag in Pipe	3	6
1	Change in Pipe Alignment, Diameter, or Material Defective Lateral Miscellaneous Observations	3	3
	Historical O&M Costs (Jan. 2010 through Dec. 2015)		
5	$10,000 or Higher	3	15
4	$5,000 to $9,999	3	12
3	$1,000 to $4,999	3	9
2	$500 to $999	3	6
1	$250 to $499	3	3
0	$0 to $249	3	0
	Coordination with Other Projects in the Same Area		
5	Adjacent to Funded CIP Project	2	10
4	Adjacent to Unfunded CIP Project	2	8
2	Adjacent to Unscheduled High-priority Water CIP Project	2	4
1	Adjacent to Unscheduled Low-priority Water CIP Project	2	2
0	Not Adjacent to Identified CIP Project	2	0
	Existing Sewer Main Material		
5	Asbestos Cement	2	10
4	Concrete, Clay	2	8
3	Unknown	2	6
0	Ductile Iron, HDPE, PVC	2	0
	Existing Sewer Main Year of Installation		
5	Before 1950 or Unknown	2	10
4	1950 to 1959	2	8
3	1960 to 1969	2	6
2	1970 to 1979	2	4
1	1980 to 1989	2	2
0	After 1989	2	0
	Existing PHF		
5	High Flow (Ex. PHF of 1,000 gpm or Higher)	1	5
4	Medium to High Flow (Ex. PHF of 500 to 999 gpm)	1	4
3	Medium Flow (Ex. PHF of 250 to 499 gpm)	1	3
2	Low to Medium Flow (Ex. PHF of 100 to 249 gpm)	1	2
1	Low Flow (Ex. PHF is Less Than 100 gpm)	1	1
	Proximity to Environmental Sensitive Areas (Landslide Hazard, Seismic Hazard, and/or Wetland)		
4	Within 50 ft of at Least 2 Types of Environmental Sensitive Areas	1	4
2	Within 50 ft of 1 Type of Environmental Sensitive Area	1	2
0	Not Within 50 ft of Any Environmental Sensitive Area	1	0

The Existing PHF Pipe Capacity category ranks the sewer main improvements based on the ability of the existing sewer mains to convey the existing peak hour flow through the sewer mains. Capacity evaluations are determined from the results of the hydraulic analyses addressed in **Chapter 6**, or if the sewer mains have a 6-inch diameter (which is smaller than the current minimum diameter requirement of 8 inches). The Video Inspection Results category ranks the sewer mains based on the types of defects the City currently has on record. The Historical O&M Costs category ranks the sewer main improvements based on the cost of labor and materials reported by the City to operate and maintain the sewer mains from January 2010 through December 2015. The Coordination with Other Projects in Same Area category ranks the sewer main improvements based on other City projects scheduled in the same area (within 35 feet) of the proposed improvement. The Existing Sewer Main Material category ranks the sewer main improvements based on the material of the existing sewer main. The Existing Sewer Main Year of Installation category ranks the sewer main improvements based on the age of the existing sewer main. The Existing PHF category ranks the sewer main improvements based on the existing peak hour flow through the sewer mains, as determined from the results of the hydraulic analyses addressed in **Chapter 6**. The Proximity to Environmental Sensitive Areas category ranks the sewer main improvements based on if there are any environmental sensitive areas (landslide hazard, seismic hazard, and/or wetland) within 50 feet of the improvement.

The sewer main priority ranking criteria was applied to the sewer main replacement projects that are not identified as developer-funded improvement projects. These sewer main replacement projects are presented in **Tables 7-2** and **7-3** (located at the end of this chapter) with their priority ranking (which was based on the highest scoring pipe for each CIP), and are also shown in **Figure 7-1**. **Figure 7-4** shows the priority rankings of all sewer mains replacement projects identified in this CIP that are not identified as developer-funded improvement projects. **Table 7-3** (located at the end of this chapter) presents the recommended improvement projects for the Annual Sanitary Pipeline Replacement Program (CIP SM14) sorted by priority rank, which is discussed in the **Prioritizing Improvements** section of this chapter.

Facility and Miscellaneous Improvements

The City prioritized the facility improvements based on existing deficiencies, safety concerns, maintenance requirements, and capacity requirements. The miscellaneous improvements were prioritized based on regulatory requirements and assessment of the sewer system needs. The priority order of these improvements is reflected in the schedule of improvements, which is presented in **Table 7-2**.

Developer-funded Improvements

Priority and schedule for developer-funded projects is dependent on the timing and design of specific development areas. For planning purposes, a general schedule has been established for the developer-funded projects; however, the estimated schedule will need to be modified as development occurs.

Future projects that are not identified as part of this CIP may become necessary. Such projects may be required to remedy an emergency or address unforeseen problems. Due to budgetary constraints, the completion of such projects may require modifications to the recommended CIP. The City retains the flexibility to reschedule, expand, or reduce the projects included in the CIP and add new projects

to the CIP, as best determined by City Council, when new information becomes available for review and analysis.

SCHEDULE OF IMPROVEMENTS

The results of prioritizing the improvements were used to assist in establishing an implementation schedule that can be used by the City for preparing its 6-year CIP. The implementation schedule for the proposed improvements is shown in **Table 7-2**. Developer-funded improvement projects are planned to start in 2016. The City will identify and schedule the repair/replacement projects during the annual budget process. This provides the City with the flexibility to coordinate these projects with road or other projects within the same area. The developer-funded improvement projects and their associated cost estimates are also shown in **Table 7-2**. However, the implementation dates for these improvements are likely to change, due to the uncertainty of the timing of the future developments that will be responsible for these improvements.

Future Project Cost Adjustments

All cost estimates shown in the tables are presented in year 2017 dollars. Therefore, it is recommended that future costs be adjusted to account for the effects of inflation and changing construction market conditions at the actual time of project implementation. Future costs can be estimated using the Engineering News Record Construction Cost Index for the Seattle area or by applying an estimated rate of inflation that reflects the current and anticipated future market conditions.

The CIP presented in **Table 7-2** is based on the information currently available. As the City implements the recommendations, the cost and timing of projects may be revised. The two elements that are most likely to affect the costs and schedule of projects in the CIP table are:

- Condition assessment, particularly of the lift stations; and
- Collection system flow monitoring.

Once these activities are completed or under way, the City can reassess the priority and timing of the projects in the CIP.

Table 7-2
Proposed Improvements Implementation Schedule

CIP No.	Project Description In	From	To	Size Length (LF)	Diameter (in.)	Estimated Cost	Rank Points	Priority Rank	Planned Year of Project and Estimated Cost (x 1,000) 2016	2017	2018	2019	2020	2021	2022	2023	2024	2025	2026-2035	2035+
						Sewer Main Improvements														
SM1	6th Street S Sewer Main Replacement (SS 0051)			950	15", 12"	$965,000	30	M		$146	$819									
SM2	108th Avenue NE Sewer Main Replacement (SS 0052)			4,000	12", 8"	$5,506,000	59	H			$711	$3,236	$1,559							
SM3	NE 108th Street Sewer Main Replacement (SS 0062)			3,000	18", 15"	$6,569,500	38	M					$3,390	$3,179						
SM4	1st Street Sewer Main Replacement (SS 0069)			4,170	8"	$3,820,000	51	H	$354	$3,466										
SM5	5th Street Sewer Main Replacement (SS 0070)			1,430	12", 8"	$1,284,000	41	H	$420	$865										
SM6	6th Street Sewer Main Replacement (SS 0071)			325	8"	$287,000	59	H	$287											
SM7	Kirkland Avenue Sewer Main Replacement (SS 0072)			1,550	12"	$2,298,400	54	H			$285	$2,013								
SM8	3rd Avenue S and 2nd Street S Sewer Main Replacement (SS 0079)			780	8"	$361,600	65	H	$362											
SM9	3rd and Central Way Sanitary Sewer Crossing (SS 0082)			90	30"	$300,000	30	M	$300											
SM10	West of Market Sewer Main Replacement (SS 0077)			45,000	12", 8"	$21,681,000	65	H					$225	$2,500	$2,500	$2,500	$2,500	$2,500	$8,956	
SM11	Annual Sewer Critical Areas Ordinance / Surface Water Design Manual Support (SS 7777)			---	---	$700,000	---	---		$700										
SM12	Annual Sanitary Pipeline Replacement Program (SS 8888)			---	---	$1,333,200	---	---						$400	$933					
SM13	Annual Sanitary Pump Station/System Upgrade Program (SS 9999)			---	---	$1,333,200	---	---						$400	$933					
SM14	Annual Sanitary Pipeline Replacement Program (CIP EX2 through CIP EX322)			275,000	36", 30", 24", 18", 15", 12", 8", 6"	$236,158,000	---	---								$3,413	$2,315	$2,373	$55,190	$172,867
Total - Sewer Main Improvements						**$282,596,900**	**---**	**---**	**$1,722**	**$5,176**	**$1,815**	**$5,250**	**$5,174**	**$6,480**	**$4,366**	**$5,913**	**$4,815**	**$4,873**	**$64,146**	**$172,867**
						Annual Sanitary Pipeline Replacement Program (SM14)														
~~EX1~~	~~NE 118th St~~	~~117th Ave NE~~	~~118th Ave NE~~	~~250~~	~~8"~~	~~$205,000~~	~~21~~	~~L~~												~~$205~~
EX2	NE 116th St	111th Pl NE	111th Ave NE	150	8"	$123,000	29	M												$123
EX3	NE 116th St	~200' W of 117th Ave NE	~117th Ave NE	200	8"	$164,000	35	M												$164
EX4	NE 116th St (Freeway Crossing)	120th Ave NE	124th Ave NE	1,450	24", 8"	$1,354,000	35	M												$1,354
EX5	103rd Pl NE NE 114th Pl NE 115th Pl 105th Pl NE 105th Pl NE	NE 113th Pl 103rd Pl NE 103rd Pl NE NE 115th Pl ~NE 114th Ln	~NE 115th Ln ~115' W of 103rd Pl NE 105th Pl NE NE 116th St NE 114th St	1,850	8"	$1,511,000	33	M												$1,511
EX6	106th Ave NE	NE 112th St	~NE 114th St	775	8"	$633,000	28	M												$633
EX7	108th Ave NE	NE 112th St	~NE 115th Ln	1,225	8"	$1,001,000	26	L												$1,001
EX8	109th Ave NE	NE 112th St	~NE 115th Ln	1,250	8"	$1,021,000	17	L												$1,021
EX9	120th Ave NE	~300' S of NE 116th St	~445' S of NE 116th St	150	8"	$123,000	36	M												$123
EX10	98th Ave NE	Old Market St Trail	~NE 108th St	2,250	36"	$2,679,000	24	L												$2,679
EX11	98th Ave NE	Old Market St Trail	~NE 113th Pl	425	12", 8"	$593,000	15	L												$593
EX12	100th Ave NE	NE 110th St	NE 113th St	1,025	8"	$1,123,000	32	M												$1,123
EX13	NE 113th St 101st Ave NE NE 113th Pl	100th Ave NE NE 113th St 101st Ave NE	101st Ave NE NE 113th Pl ~106th Ave NE	2,125	8"	$1,735,000	31	M												$1,735
EX14	101st Ave NE NE 112th Pl 103rd Ave NE	NE 113th St 101st Ave NE NE 112th Pl	NE 112th Pl 103rd Ave NE ~NE 113th St	1,100	8"	$899,000	17	L												$899
EX15	104th Ave NE	NE 108th St	~NE 112th Pl	1,575	8"	$1,286,000	31	M												$1,286
EX16	NE 112th St	~ 155' W of 104th Ave NE	~ 195' E of 105th Ave NE	850	8"	$694,000	29	M												$694
EX17	NE 112th St	106th Ave NE	~109th Pl NE	975	8"	$796,000	30	M												$796
EX18	NE 112th St 110th Ave NE	111th Ave NE NE 112th St	110th Ave NE ~NE 114th St	925	8"	$756,000	33	M												$756
EX19	~111th Ave NE ~NE 112th Pl	NE 112th St ~111th Ave NE	~NE 113th Pl ~112th Ave NE	1,025	8"	$1,174,000	27	L												$1,174
EX20	~118th Ave NE	NE 112th St	~NE 113th Pl	450	8"	$368,000	21	L												$368
EX21	120th Ave NE	~NE 112th Pl	~NE 113th Pl	350	8"	$286,000	27	L												$286
EX22	~NE 112th St	I-405	Slater Ave NE	225	24"	$350,000	40	H												$350

[1] Projects that are struck through were removed because they are located in the area that was acquired by Northshore in 2017 (NE 124th Street Sewer Drainage Basin). Costs for these projects were omitted from this table.

Table 7-2
Proposed Improvements Implementation Schedule (Continued)

CIP No.	Project Description In	From	To	Size Length (LF)	Diameter (in.)	Estimated Cost	Rank Points	Priority Rank	Planned Year of Project and Estimated Cost (x 1,000) 2016	2017	2018	2019	2020	2021	2022	2023	2024	2025	2026-2035	2035+
Annual Sanitary Pipeline Replacement Program (SM14)																				
EX23	NE 112th St	~105' W of 127th Pl NE	127th Pl NE	125	12"	$105,000	22	L												$105
EX24	NE 110th St 105th Ave NE	105th Ave NE NE 110th St	105th Ave NE ~NE 111th Ave Pl	1,025	8"	$837,000	29	M												$837
EX25	NE 110th St 106th Ave NE	108th Ave NE NE 110th St	106th Ave NE NE 112th St	1,175	8"	$960,000	30	M												$960
EX26	~NE 108th Pl	NE 110th St	~NE 111th Ave Pl	575	8"	$470,000	19	L												$470
EX27	106th Ave NE ~NE 111th Ave Pl	NE 110th St ~108th Ave NE	~NE 111th Ave Pl ~109th Ave NE	500	8"	$409,000	27	L												$409
EX28	108th Ave NE	NE 108th St	NE 110th St	500	12", 8"	$410,000	25	L												$410
EX29	NE 108th St	108th Ave NE	109th Ave NE	275	8"	$225,000	27	L												$225
EX30	108th Ave NE ~NE 108th St Forbes Creek Dr ~NE 109th Place	NE 108th St 108th Ave NE ~NE 108th St Forbes Creek Dr	NE 108th St Forbes Creek Dr ~NE 109th Place 120th Ave NE	4,375	36", 15", 12"	$3,709,000	41	H												$3,709
EX31	~111th Ct NE ~111th Ave NE ~NE 110th St	~NE 108th St NE 110th St ~111th Ct NE	NE 110th St NE 112th St 112th Ave NE	1,650	8"	$1,348,000	26	L												$1,348
EX32	NE 111th Pl	~129th Pl NE	~130th Ave NE	225	8"	$184,000	19	L												$184
EX33	126th Pl NE NE 109th St	NE 107th Pl 126th Pl NE	NE 109th St 127th Pl NE	975	8"	$796,000	15	L												$796
EX34	127th Ave NE	NE 107th Pl	~NE 108th St	225	8"	$184,000	15	L												$184
EX35	128th Ave NE NE 108th Pl	NE 107th Pl 128th Ave NE	NE 108th Pl 129th Pl NE	1,000	8"	$817,000	29	M												$817
EX36	Rose Point Ln	~140' S of NE 108th Ave	~NE 108th Ave	150	8"	$248,000	32	M												$248
EX37	Lake Shoreline (Along Lakeshore)	~5th Ave W	Rose Point Ln	4,175	12", 8"	$6,263,000	23	L												$6,263
EX38	Forbes Creek Dr	~100th Ave NE	9th St W	750	12", 8"	$619,000	47	H											$619	
EX39	Market St	Forbes Creek Dr	20th Ave	625	8"	$511,000	33	M												$511
EX40	Market St	Forbes Creek Dr	~18th Pl	1,700	12", 8"	$1,390,000	41	H												$1,390
EX41	20th Ave	Market St	~230' E of 1st St	650	8"	$531,000	35	M												$531
EX42	100th Ave NE	NE 108th St	Forbes Creek Dr	675	12"	$857,000	42	H											$857	
EX43	Forbes Creek Dr NE 107th Pl	NE 107th Pl Forbes Creek Dr	~109th Ave NE Forbes Creek Dr	1,150	8"	$1,280,000	27	L												$1,280
EX44	108th Ave NE	NE 108th St	Forbes Creek Dr	650	8"	$766,000	33	M												$766
EX45	111th Ave NE	Cross Kirkland Corridor	~25' SE of Cross Kirkland Corridor	25	8"	$21,000	21	L												$21
EX46	~NE 107th St	116th Ave NE	~170' W of 116th Ave NE	175	8"	$143,000	19	L												$143
EX47	~115th Pl NE	NE 104th St	~NE 103rd Pl	300	8"	$245,000	26	L												$245
EX48	Slater Ave NE	NE 106th St	NE 105th St	175	30"	$166,000	38	M												$166
EX49	124th Ave NE 124th Ave NE	~145' N of NE 104th St NE 103rd Pl	~165' S of NE 104th St ~90' S of NE 103rd Pl	425	12", 8"	$350,000	17	L												$350
EX50	NE 107th Pl	~125th Ave NE	Mark Twain Park	1,700	8"	$1,388,000	30	M												$1,388
EX51	128th Ave NE	NE 107th Pl	NE 106th Pl	450	8"	$368,000	29	M												$368
EX52	NE 106th Pl	128th Ave NE	129th Pl NE	625	8"	$511,000	29	M												$511
EX53	129th Pl NE	NE 106th Pl	129th Pl NE cul-de-sac	200	8"	$164,000	22	L												$164
EX54	NE 104th St	130th Ave NE	~80' E of 130th Ave NE	100	8"	$82,000	27	L												$82
EX55	Market St	20th Ave W	7th St W	125	8"	$103,000	23	L												$103
EX56	1st St	20th Ave	~19th Pl	500	8"	$409,000	55	H											$409	
EX57	~19th Pl	20th Ave	~190' E of 20th Ave	1,825	8"	$1,490,000	39	M												$1,490
EX58	1st St	19th Ave	~125' N of 18th Ave	550	8"	$450,000	27	L												$450

Table 7-2
Proposed Improvements Implementation Schedule (Continued)

CIP	Project Description			Size		Estimated	Rank	Priority	Planned Year of Project and Estimated Cost (x 1,000)											
No.	In	From	To	Length (LF)	Diameter (in.)	Cost	Points	Rank	2016	2017	2018	2019	2020	2021	2022	2023	2024	2025	2026-2035	2035+
Annual Sanitary Pipeline Replacement Program (SM14)																				
EX59	2nd St	19th Ave	~130' N of 18th Ave	550	8"	$450,000	30	M												$450
EX60	3rd St	19th Ave	~130' N of 18th Ave	550	8"	$450,000	30	M												$450
EX61	4th St	19th Ave	~155' S of 19th Ave	175	8"	$143,000	41	H												$143
EX62	Market St	18th Ave W	18th Ave	325	8"	$266,000	36	M												$266
EX63	18th Ave	Market St	~240' E of 2nd St	1,075	8"	$878,000	27	L												$878
EX64	18th Ave	3rd St	~4th Pl	825	8"	$674,000	39	M												$674
EX65	4th St	~230' N of 18th Ave	15th Ave	1,200	8"	$980,000	58	H											$980	
EX66	4th Pl	20th Ave	~120' N of 19th Ave	525	8"	$429,000	52	H											$429	
EX67	~165' N of NE 102nd Pl ~235' W of 111th Ave NE	Cross Kirkland Corridor ~165' N of NE 102nd Pl	111th Ave NE ~NE 103rd Pl	850	8"	$694,000	43	H											$694	
EX68	111th Ave NE	NE 100th St	~NE 103rd Pl	950	8"	$776,000	25	L												$776
EX69	~165' N of NE 102nd Pl ~131' W of 112th Ave NE 112th Ave NE NE 103rd Pl	111th Ave NE ~165' N of NE 102nd Pl ~165' N of NE 102nd Pl 112th Ave NE	112th Ave NE NE 102nd Pl NE 103rd Pl NE 103rd Pl cul-de-sac	875	8"	$715,000	19	L												$715
EX70	NE 103rd St	~114th Pl NE	~290' W of 116th Ave NE	175	8"	$143,000	29	M												$143
EX71	NE 100th St	116th Ave NE	111th Ave NE	1,350	8"	$1,103,000	39	M												$1,103
EX72	112th Ave NE Highlands Park NE 103rd Pl	NE 100th St 112th Ave NE Highlands Park	NE 102nd St NE 103rd Pl 114th Pl NE	1,150	8"	$939,000	25	L												$939
EX73	114th Ave NE 114th Pl NE	NE 100th St 114th Ave NE	114th Pl NE ~NE 103rd Pl	475	8"	$388,000	27	L												$388
EX74	116th Ave NE	~NE 97th Ln	~NE 101st Pl	925	8"	$756,000	40	H												$756
EX75	Slater Ave NE	~NE 100th Pl	NE 100th Pl	225	24"	$350,000	34	M												$350
EX76	Waverly Park Way	Waverly Beach Park	10th Ave W Alley	50	12"	$42,000	5	L												$42
EX77	Waverly Park Way 6th St W	Waverly Beach Park Waverly Park Way	6th St W 10th Ave W	250	15", 8"	$206,000	16	L												$206
EX78	7th Ave W Alley	5th St W	4th St W	550	8"	$450,000	57	H											$450	
EX79	Market St	3rd St W	11th Ave W	175	8"	$143,000	50	H											$143	
EX80	5th St W 16th Ave Market St	16th Ave W Market St 16th Ave	Market St 2nd St ~17th Pl	1,075	8"	$878,000	57	H											$878	
EX81	1st St 17th Pl	18th Ave 1st St	~85' S of 17th Pl 17th Pl cul-de-sac	600	8"	$490,000	35	M												$490
EX82	14th Ave	Market St	~100' E of Market St	125	8"	$103,000	36	M												$103
EX83	10th Ave	Market St	~135' E of Market St	150	8"	$123,000	51	H											$123	
EX84	15th Ave	1st St	~145' W of 2nd St	425	8"	$347,000	60	H									$347			
EX85	14th Ave	1st St	~130' W of 2nd St	425	8"	$347,000	57	H											$347	
EX86	13th Ave	1st St	~125' W of 2nd St	425	8", 6"	$343,000	42	H											$343	
EX87	12th Ave	1st St	~125' W of 2nd St	425	8"	$347,000	48	H											$347	
EX88	11th Ave	1st St	~140' W of 2nd St	425	8"	$347,000	42	H											$347	
EX89	11th Ave	1st St	2nd St	575	8"	$470,000	25	L												$470
EX90	2nd St	10th Ave	18th Ave	2,450	8"	$2,001,000	49	H											$2,001	
EX91	9th Ave 2nd St	1st St 9th Ave	2nd St 9th Ave Alley	725	8", 6"	$583,000	45	H											$583	
EX92	13th Ave	3rd St	~225' W of 3rd St	250	8"	$205,000	45	H											$205	
EX93	10th Ave	3rd St	~115' E of 2nd St	400	8"	$327,000	56	H											$327	
EX94	9th Ave	3rd St	~125' E of 2nd St	450	8"	$368,000	68	H								$368				
EX95	3rd St	18th Ave	~17th Pl	250	8"	$205,000	27	L												$205
EX96	3rd St	Central Way	~17th Ave	4,150	8"	$3,389,000	57	H											$3,389	

Table 7-2
Proposed Improvements Implementation Schedule (Continued)

CIP No.	Project Description In	From	To	Size Length (LF)	Diameter (in.)	Estimated Cost	Rank Points	Priority Rank	Planned Year of Project and Estimated Cost (x 1,000) 2016	2017	2018	2019	2020	2021	2022	2023	2024	2025	2026-2035	2035+
Annual Sanitary Pipeline Replacement Program (SM14)																				
EX97	17th Ave	4th St	17th Ave cul-de-sac	225	8"	$184,000	30	M												$184
EX98	3rd Pl	15th Ave	3rd Pl cul-de-sac	375	8"	$307,000	26	L												$307
EX99	5th St	15th Ave	~265' N of 15th Ave	275	8"	$225,000	19	L												$225
EX100	5th Pl	15th Ave	~225' N of 15th Ave	250	8"	$205,000	26	L												$205
EX101	15th Ave	6th St	~200' E of 3rd St	1,575	8"	$1,482,000	36	M												$1,482
EX102	6th St	11th Ave	~15th Ave	1,225	8"	$1,001,000	44	H											$1,001	
EX103	14th Pl	6th St	Peter Kirk Elementary School	325	8"	$266,000	39	M												$266
EX104	4th St	13th Ave	~14th Ave	475	8"	$573,000	22	L												$573
EX105	5th St	9th Ave	~195' N of 13th Ave	1,500	8", 6"	$1,224,000	41	H												$1,224
EX106	13th Ave	4th St	~135' E of 3rd St	675	8"	$552,000	57	H											$552	
EX107	11th Pl	4th St	~150' E of 3rd St	675	8"	$552,000	65	H									$552			
EX108	13th Ave 4th St	5th Ln 13th Ave	4th St ~145' S of 11th Pl	1,275	8"	$1,041,000	42	H											$1,041	
EX109	~12th Ave	5th St	5th Pl	325	8"	$266,000	35	M												$266
EX110	4th St	10th Ave	~11th Ave	300	8"	$245,000	41	H											$245	
EX111	10th Ave	5th St	~280' E of 3rd St	900	8"	$735,000	50	H											$735	
EX112	9th Ave	5th St	~130' E of 3rd St	1,000	8"	$817,000	57	H											$817	
EX113	12th Ave	6th St	~250' W of 8th St	725	8"	$592,000	48	H											$592	
EX114	11th Ave	6th St	~310' W of 8th St	650	8"	$531,000	51	H											$531	
EX115	10th Ave	~175' E of 5th St	~330' W of 8th St	1,025	8"	$837,000	54	H											$837	
EX116	~5th Pl 9th Ave 8th Ave Alley	8th Ave ~5th Pl ~135' E of 5th St	9th Ave ~155' E of 5th St ~90' W of 6th St	850	12", 8"	$698,000	51	H											$698	
EX117	6th St	Central Way	10th Ave	1,350	8"	$1,103,000	29	M												$1,103
EX118	9th Ave	6th St	~390' E of 6th St	400	8"	$327,000	39	M												$327
EX119	8th St	7th Ave	11th Ave	1,300	8"	$1,062,000	26	L												$1,062
EX120	9th Ave	~4555' E of 6th St	~275' E of 8th St	775	8"	$633,000	30	M												$633
EX121	112th Ave NE	NE 87th St	~115' S of NE 100th St	3,275	12", 8"	$2,675,000	33	M												$2,675
EX122	NE 97th St ~114th Ave NE	112th Ave NE NE 97th St	~130' W of 116th Ave NE Observation Dr	1,500	8"	$1,225,000	29	M												$1,225
EX123	NE 95th St ~114th Ave NE	112th Ave NE NE 95th St	~130' W of 116th Ave NE ~210' N of NE 95th St	1,350	8"	$1,103,000	23	L												$1,103
EX124	116th Ave NE	~90' S of NE 88th St	NE 97th St	2,650	8", 6"	$2,158,000	42	H											$2,158	
EX125	NE 94th St	112th Ave NE	~195' S of NE 95th St	850	8"	$694,000	17	L												$694
EX126	114th Ave NE NE 94th St ~290' W of 116th Ave NE	NE 94th St 114th Ave NE NE 94th St	NE 94th St ~290' W of 116th Ave NE ~NE 94th Pl	625	8"	$511,000	17	L												$511
EX127	NE 92nd St	112th Ave NE	~140' W of 116th Ave NE	1,000	8"	$817,000	17	L												$817
EX128	NE 91st St	112th Ave NE	~180' E of 114th Ave NE	750	8"	$613,000	23	L												$613
EX129	NE 91st St	116th Ave NE	~265' W of 116th Ave NE	300	8"	$245,000	30	M												$245
EX130	NE 90th St	112th Ave NE	~180' W of 116th Ave NE	975	8"	$796,000	24	L												$796
EX131	NE 90th St Slater Ave NE ~117th Ave NE	116th Ave NE NE 90th St Slater Ave NE	Slater Ave NE ~117th Ave NE ~265' S of NE 95th St	1,500	8"	$1,225,000	31	M												$1,225
EX132	NE 92nd St	~117th Ave NE	~NE 90th St	375	8"	$307,000	45	H											$307	
EX133	~Slater Ave NE	~NE 92nd St	~NE 91st St	325	18"	$284,000	21	L												$284
EX134	NE 90th St	~245' W of 120th Ave NE	120th Ave NE	300	24"	$436,000	33	M												$436
EX135	NE 95th St	125th Ave NE	126th Ave NE	375	18"	$512,000	12	L												$512

Table 7-2
Proposed Improvements Implementation Schedule (Continued)

CIP	Project Description			Size		Estimated	Rank	Priority	Planned Year of Project and Estimated Cost (x 1,000)											
No.	In	From	To	Length (LF)	Diameter (in.)	Cost	Points	Rank	2016	2017	2018	2019	2020	2021	2022	2023	2024	2025	2026-2035	2035+
Annual Sanitary Pipeline Replacement Program (SM14)																				
EX136	128th Ave NE	NE 100th St	NE 95th St	1,250	12"	$1,224,000	44	H											$1,224	
EX137	NE 94th St 129th Ave NE 130th Ave NE	NE 94th St cul-de-sac NE 94th St NE 94th St	130th Ave NE 129th Ave NE cul-de-sac ~NE 94th Ct	700	8"	$572,000	19	L												$572
EX138	128th Ave NE	NE 91st Ln	NE 91st St	100	15"	$190,000	43	H											$190	
EX139	2nd St W Market St	7th Ave W Alley 2nd St W	Market St 8th Ave W	175	8"	$143,000	51	H											$143	
EX140	6th Ave	Market St	~130' W of Market St	150	8"	$123,000	50	H											$123	
EX141	5th Ave	Market St	~130' W of Market St	150	8"	$123,000	44	H											$123	
EX142	Waverly Way	Market St	~400' NW of Market St	400	18"	$349,000	18	L												$349
EX143	Market St	Central Way	4th Ave	600	12"	$501,000	30	M												$501
EX144	8th Ave	1st St	2nd St	525	8"	$429,000	51	H											$429	
EX145	8th Ave	3rd St	~85' E of 2nd St	475	8"	$388,000	44	H											$388	
EX146	7th Ave ~165' E of 1st St 7th Ave Alley	1st St 7th Ave ~165' E of 1st St	~80' W of 2nd St 7th Ave Alley ~175' W of 2nd St	850	8"	$694,000	61	H										$694		
EX147	7th Ave	3rd St	~80' E of 2nd St	500	8"	$409,000	58	H											$409	
EX148	6th Ave	1st St	~85' W of 2nd St	475	8"	$388,000	39	M												$388
EX149	6th Ave	~240' W of 4th St	~80' E of 2nd St	825	8"	$674,000	50	H											$674	
EX150	5th Ave 2nd St	1st St 5th Ave	2nd St 5th Ave Alley	650	8"	$531,000	50	H											$531	
EX151	5th Ave	3rd St	~85' E of 2nd St	500	8"	$409,000	53	H											$409	
EX152	4th Ave	3rd St	2nd St	575	8"	$470,000	31	M												$470
EX153	3rd Ave	2nd Pl S	~180' E of 1st St	625	8"	$511,000	53	H											$511	
EX154	Central Way	~2nd St	Market St	850	30"	$804,000	17	L												$804
EX155	Lakeshore Plaza	~1st St	~55' W of 1st St	75	12"	$63,000	30	M												$63
EX156	Commercial Alley Park Ln	~245' W of Main St Commercial Alley	Park Ln ~125' E of Lake St S	125	8"	$103,000	35	M												$103
EX157	Main St	Park Ln	~155' N of Kirkland Ave	275	15"	$234,000	31	M												$234
EX158	8th Ave	~130' W of 6th St	~130' E of 3rd St	1,425	8"	$1,164,000	55	H											$1,164	
EX159	8th Ave	6th St	~360' E of 6th St	375	8"	$307,000	48	H											$307	
EX160	7th Ave	~130' E of 3rd St	~8th St	2,425	8"	$1,980,000	50	H											$1,980	
EX161	4th St	Central Way	7th Ave	875	8"	$715,000	34	M												$715
EX162	5th Ave	4th St	~160' E of 3rd St	425	8"	$347,000	55	H											$347	
EX163	~130' N of Central Way	4th St	~210' W of 4th St	225	8"	$184,000	28	M												$184
EX164	Peter Kirk Park			50	8"	$41,000	26	L												$41
EX165	Kirkland Ave	3rd St	~5th St	1,100	8"	$899,000	31	M												$899
EX166	6th St	~5th Ave W	1st Ave S	1,675	12", 8"	$1,393,000	62	H										$1,393		
EX167	6th Ave	6th St	7th Ave	850	8"	$694,000	35	M												$694
EX168	Kirkland Way	6th St	~9th Ln	1,025	8", 6"	$813,000	41	H												$813
EX169	Residential Easement	~3rd Ave	~55' S of 3rd Ave	75	8",	$62,000	11	L												$62
EX170	NE 88th St	112th Ave NE	~113th Ln NE	450	8"	$368,000	21	L												$368
EX171	114th Ave NE NE 88th St	NE 87th St 114th Ave NE	NE 88th St 116th Ave NE	900	8"	$735,000	32	M												$735
EX172	NE 87th St	112th Ave NE	~95 W of 116th Ave NE	1,025	8", 6"	$819,000	23	L												$819
EX173	114th Ave NE NE 86th St	NE 87th St 114th Ave NE	NE 86th St NE 86th St cul-de-sac	600	8"	$490,000	13	L												$490
EX174	~NE 85th St	Cross Kirkland Corridor	~80' E of Cross Kirkland Corridor	100	8"	$82,000	23	L												$82
EX175	~3rd Ave	Cross Kirkland Corridor	~80' E of Cross Kirkland Corridor	100	8"	$82,000	17	L												$82

Table 7-2
Proposed Improvements Implementation Schedule (Continued)

CIP No.	Project Description In	From	To	Size Length (LF)	Diameter (in.)	Estimated Cost	Rank Points	Priority Rank	Planned Year of Project and Estimated Cost (x 1,000) 2016	2017	2018	2019	2020	2021	2022	2023	2024	2025	2026-2035	2035+
Annual Sanitary Pipeline Replacement Program (SM14)																				
EX176	Slater St	Kirkland Ave	Ohde Ave	675	8"	$552,000	55	H											$552	
EX177	~130th Ave NE NE 85th St	~NE 86th St ~130th Ave NE	NE 85th St ~80' E of 130th Ave NE	250	8"	$205,000	1	L												$205
EX178	~160' S of NE 85th St	128th Ave NE	~420' E of 128th Ave NE	425	8"	$347,000	38	M												$347
EX179	NE 84th St	128th Ave NE	~130th Ave NE	600	8"	$490,000	29	M												$490
EX180	128th Ave NE NE 83rd St	NE 84th St 128th Ave NE	NE 83rd St 131st Ave NE	1,350	8"	$1,103,000	25	L												$1,103
EX181	128th Ave NE	NE 80th St	~NE 81st Pl	400	8"	$327,000	38	M												$327
EX182	Lake Plaza Lift Station			25	18"	$22,000	17	L												$22
EX183	Commercial Alley	Kirkland Ave	Lake St S	575	12", 8"	$480,000	28	M												$480
EX184	Kirkland Ave ~State St S	Main St Kirkland Ave	~State St S ~3rd St	425	8"	$347,000	40	H												$347
EX185	1st Ave S	State St S	2nd St S	275	8"	$225,000	35	M												$225
EX186	Kirkland Ave	Kirkland Way	~5th Pl S	650	8"	$531,000	46	H											$531	
EX187	2nd Ave S 3rd St S	State St S 2nd Ave S	2nd St S ~140' S of 2nd Ave S	600	8"	$490,000	38	M												$490
EX188	2nd Ave S 4th St S	State St S 2nd Ave S	4th St S ~165' S of 2nd Ave S	625	8"	$511,000	52	H											$511	
EX189	~3rd Ave S 2nd St S	Lake St S ~3rd Ave S	~35 E of Lake St S 4th Ave S	200	8"	$164,000	50	H											$164	
EX190	5th Ave S	~145' E of 2nd St S	~3rd St S	150	8"	$123,000	39	M												$123
EX191	~365' N of 10th Ave S	Lake St S	1st St S	275	8"	$225,000	39	M												$225
EX192	4th Ave S	~45' E of State St S	~4th Pl S	750	8"	$613,000	44	H											$613	
EX193	5th Ave S	~135' E of State St S	5th St S	775	8"	$633,000	48	H											$633	
EX194	6th Ave S	~35' E of State St S	5th St S	825	8"	$674,000	36	M												$674
EX195	7th Ave S 3rd Pl S	~25' E of State St S 7th Ave S	5th St S ~210' S of 7th Ave S	1,075	8", 6"	$864,000	65	H									$864			
EX196	Kirkland Ave	6th St	Cross Kirkland Corridor	1,275	12", 8"	$1,059,000	42	H											$1,059	
EX197	6th St S	Kirkland Ave	3rd Ave S	775	12"	$647,000	27	L												$647
EX198	~410' N of 5th Ave S	6th St S	8th St S	675	8"	$552,000	44	H											$552	
EX199	6th St S	~410' N of 5th Ave S	~445' N of 9th Ave S	1,300	12", 8"	$1,078,000	33	M												$1,078
EX200	5th Ave S 7th St S	6th St S 5th Ave S	7th St S ~8th Ave S	1,375	8"	$1,123,000	44	H											$1,123	
EX201	8th St S	~3rd Ave S	~130' N of 9th Ave S	1,850	8"	$1,511,000	29	M												$1,511
EX202	10th St S	Kirkland Ave	~4th Ave S	1,025	8"	$1,072,000	42	H											$1,072	
EX203	~340' S of Kirkland Ave	10th St S	~380' E of 10th St S	400	8"	$476,000	22	L												$476
EX204	Slater St S North Ave 115th Pl NE	Kirkland Ave Slater St S ~600' N of North Ave	North Ave 115th Pl NE NE 75th St	1,950	8"	$1,592,000	52	H											$1,592	
EX205	NE 80th St (Freeway Crossing)	116th Ave NE	~Kirkland Cemetery	1,700	12"	$1,486,000	48	H											$1,486	
EX206	116th Ave NE	NE 80th St	NE 74th St	1,525	12", 8"	$1,268,000	31	M												$1,268
EX207	Lake Washington High School			475	8"	$388,000	1	L												$388
EX208	~115' N of NE 75th St	116th Ave NE	118th Ave NE	475	8"	$388,000	33	M												$388
EX209	NE 75th St	116th Ave NE	~245' E of 118th Ave NE	1,600	8"	$1,307,000	50	H											$1,307	
EX210	NE 74th St	116th Ave NE	~118th Ave NE	475	8"	$388,000	31	M												$388
EX211	120th Ave NE	NE 75th St	~195' S of NE 73rd St	850	8"	$694,000	29	M												$694
EX212	116th Ave NE	~NE 70th Pl	~NE 68th Pl	725	8"	$592,000	28	M												$592
EX213	~119th Ave NE	NE 70th Pl	Holy Family School	375	8"	$307,000	17	L												$307

Table 7-2
Proposed Improvements Implementation Schedule (Continued)

CIP	Project Description			Size		Estimated	Rank	Priority	Planned Year of Project and Estimated Cost (x 1,000)											
No.	In	From	To	Length (LF)	Diameter (in.)	Cost	Points	Rank	2016	2017	2018	2019	2020	2021	2022	2023	2024	2025	2026-2035	2035+
Annual Sanitary Pipeline Replacement Program (SM14)																				
EX214	~120th Ave NE	~95' N of NE 70th St	~NE 61st St	2,775	12", 8", 6"	$2,275,000	45	H											$2,275	
EX215	NE 80th St	123rd Ave NE	128th Ave NE	1,675	12", 8"	$1,396,000	49	H											$1,396	
EX216	126th Ave NE	NE 80th St	NE 78th Pl	450	8"	$368,000	24	L												$368
EX217	127th Pl NE	NE 80th St	~375' S of NE 80th St	375	8"	$307,000	26	L												$307
EX218	128th Ave NE ~128th Pl NE NE 75th St	NE 80th St ~NE 78th St 128th Pl NE	~NE 78th St NE 75th St ~130' W of 130th Ave NE	1,875	8"	$1,531,000	27	L												$1,531
EX219	NE 76th St 130th Ave NE ~NE 77th Ct	128th Pl NE NE 76th St 130th Ave NE	130th Ave NE ~NE 77th Ct ~131st Ave NE	1,250	8"	$1,021,000	16	L												$1,021
EX220	~NE 68th St	Lake St S	~Lakeview Dr	1,000	8"	$817,000	32	M												$817
EX221	State St S NE 68th St ~104th Ave NE	10th Ave S State St S NE 68th St	NE 68th St ~104th Ave NE ~10th Ave S	1,050	8"	$858,000	21	L												$858
EX222	Lakeview Dr Lake Washington Blvd NE	~NE 68th Pl ~101st Ct NE	~101st Ct NE ~NE 52nd St	4,675	18", 15", 12", 8"	$3,962,000	40	H												$3,962
EX223	102nd Ave NE NE 65th St 103rd Ave NE	Lakeview Dr 102nd Ave NE NE 65th St	NE 65th St 103rd Ave NE ~85' S of NE 67th St	1,600	8"	$1,307,000	36	M												$1,307
EX224	NE 68th Pl	102nd Ave NE	103rd Ave NE	675	8"	$552,000	33	M												$552
EX225	102nd Pl NE NE 67th St 104th Ave NE	NE 65th St 102nd Pl NE NE 67th St	NE 67th St 104th Ave NE ~NE 68th Pl	1,350	8"	$1,103,000	30	M												$1,103
EX226	~NE 66th Ln	NE 66th Ln	~120' W of Lakeview Dr	100	8"	$82,000	3	L												$82
EX227	NE 64th St	~35' E of Lake Washington Blvd NE	Lakeview Dr	600	8"	$490,000	39	M												$490
EX228	~102nd Ave NE ~110' N of NE 64th St	NE 64th St ~102nd Ave NE	~110' N of NE 64th St ~70' W of 103rd Ave NE	525	8"	$429,000	57	H											$429	
EX229	NE 64th St	Lakeview Dr	103rd Ave NE	675	8"	$552,000	36	M												$552
EX230	NE 63rd St	~60' E of Lake Washington Blvd NE	Lakeview Dr	525	8"	$429,000	36	M												$429
EX231	NE 62nd St	~50' E of Lake Washington Blvd NE	Lakeview Dr	475	8"	$388,000	36	M												$388
EX232	NE 62nd St 102nd Pl NE	Lakeview Dr NE 62nd St	103rd Pl NE ~ 280' N of NE 62nd St	800	8"	$654,000	38	M												$654
EX233	NE 60th St	Lake Washington Blvd NE	Lakeview Dr	450	8"	$368,000	38	M												$368
EX234	NE 60th St ~103rd Pl NE	Lakeview Dr NE 60th St	~65' E of Lakeview Dr ~150' S of NE 60th St	225	8", 6"	$176,000	21	L												$176
EX235	NE 68th St	~115' W of 106th Ave NE	~200' E of 106th Ave NE	375	12", 8"	$308,000	36	M												$308
EX236	NE 68th St 106th Ave NE ~NE 64th St	~95' W of 106th Ave NE NE 68th St 106th Ave NE	106th Ave NE ~NE 64th St ~330' E of 106th Ave NE	1,650	15", 8"	$1,351,000	46	H											$1,351	
EX237	~104th Pl NE	~NE 64th St	~NE 65th Pl	200	8"	$164,000	53	H											$164	
EX238	~NE 64th St 105th Ave NE ~NE 65th Pl	Cross Kirkland Corridor ~NE 64th St 105th Ave NE	105th Ave NE ~NE 65th Pl ~135' W of 106th Ave NE	625	8"	$511,000	30	M												$511
EX239	~NE 63rd St	Cross Kirkland Corridor	106th Ave NE	600	8"	$490,000	25	L												$490
EX240	NE 61st Ct	104th Ave NE	~125' W of 104th Ave NE	125	6"	$95,000	13	L												$95
EX241	NE 60th St ~104th Ave NE 105th Ave NE	~104th Ave NE NE 60th St NE 60th St	105th Ave NE ~NE 59th St ~NE 59th St	1,100	8", 6"	$894,000	21	L												$894

Table 7-2
Proposed Improvements Implementation Schedule (Continued)

CIP No.	Project Description In	From	To	Size Length (LF)	Diameter (in.)	Estimated Cost	Rank Points	Priority Rank	Planned Year of Project and Estimated Cost (x 1,000) 2016	2017	2018	2019	2020	2021	2022	2023	2024	2025	2026-2035	2035+
						Annual Sanitary Pipeline Replacement Program (SM14)														
EX242	105th Ave NE	~NE 63rd St	~NE 60th Ln	650	8"	$531,000	21	L												$531
EX243	~NE 62nd St	105th Ave NE	106th Ave NE	225	8"	$184,000	23	L												$184
EX244	106th Ave NE ~NE 57th St	~NE 62nd St 106th Ave NE	NE 57th St NE 55th St	2,100	8", 6"	$1,705,000	23	L												$1,705
EX245	NE 60th Ln	106th Ave NE	~225' E of 106th Ave NE	250	8"	$205,000	21	L												$205
EX246	9th Ave S ~112th Ave NE	6th St S 9th Ave S	~112th Ave NE ~10th Ave S	1,400	8"	$1,143,000	29	M												$1,143
EX247	8th St S ~435' S of 9th Ave S	9th Ave S 8th St S	~NE 68th St ~111th Ave NE	875	8"	$715,000	25	L												$715
EX248	~NE 68th St ~118th Pl NE (Freeway Crossing)	108th Ave NE NE 70th Pl	118th Pl NE NE 69th Pl	3,925	12", 8"	$3,387,000	42	H											$3,387	
EX249	111th Ave NE	NE 68th St	~NE 67th St	200	8"	$164,000	36	M												$164
EX250	111th Ave NE	NE 68th St	~120' N of NE 67th St	250	8"	$205,000	23	L												$205
EX251	~NE 66th Pl	108th Ave NE	~108th Pl NE	250	8"	$205,000	39	M												$205
EX252	NE 66th Pl 110th Ave NE NE 65th St	NE 66th Pl cul-de-sac NE 66th Pl 110th Ave NE	110th Ave NE NE 65th St 114th Ave NE	1,700	8"	$1,388,000	34	M												$1,388
EX253	112th Ave NE	NE 65th St	NE 67th St	275	8"	$225,000	23	L												$225
EX254	113th Ave NE NE 67th St	NE 65th St 113th Ave NE	NE 67th St ~114th Ave NE	1,100	8"	$899,000	35	M												$899
EX255	~435' N of NE 65th St ~170' E of 113th Ave NE 114th Ave NE	113th Ave NE ~520' N of NE 65th St ~605' N of NE 65th St	114th Ave NE ~120' N of NE 65th St ~75' N of NE 65th St	1,300	8", 6"	$1,056,000	39	M												$1,056
EX256	~113th Ave NE ~NE 64th St NE 63rd St 113th Ave NE ~NE 62nd St	NE 65th St ~113th Ave NE ~113th Ave NE NE 63rd St 113th Ave NE	NE 63rd St 113th Ave NE 113th Ave NE ~NE 62nd St 114th Ave NE	1,200	8"	$980,000	39	M												$980
EX257	~NE 62nd St	111th Ave NE	~113th Ave NE	950	8"	$776,000	23	L												$776
EX258	111th Pl NE	NE 62nd St	~115' N of NE 60th St	525	8"	$429,000	17	L												$429
EX259	112th Ave NE NE 61st Pl	NE 62nd St 112th Ave NE	NE 61st Pl ~113th Ave NE	900	8"	$735,000	21	L												$735
EX260	NE 60th St 114th Ave NE	108th Ave NE NE 60th St	114th Ave NE ~NE 55th St	3,300	8"	$2,863,000	28	M												$2,863
EX261	~NE 68th Pl 117th Ave NE NE 67th St ~116th Pl NE	116th Ave NE ~NE 68th Pl 117th Ave NE NE 67th St	117th Ave NE NE 67th St 116th Pl NE 116th Ave NE	1,425	8"	$1,164,000	15	L												$1,164
EX262	NE 67th Pl	117th Ave NE	NE 68th Pl	625	8"	$511,000	13	L												$511
EX263	119th Ave NE	NE 70th Pl	~NE 67th Pl	800	8"	$654,000	24	L												$654
EX264	NE 70th St	~250' W of 120th Ave NE	~80' E of 123rd Ave NE	925	8"	$756,000	29	M												$756
EX265	~NE 68th Pl	120th Ave NE	~160' W of 122nd Ave NE	525	8"	$429,000	24	L												$429
EX266	122nd Ave NE ~135' N of NE 68th Pl ~123rd Ave NE NE 68th Pl	NE 70th St 122nd Ave NE ~135' N of NE 68th Pl ~123rd Ave NE	~135' N of NE 68th Pl ~123rd Ave NE NE 68th Pl ~122nd Pl NE	1,075	8"	$878,000	27	L												$878
EX267	~NE 67th St 123rd Ave NE	~120th Ave NE NE 67th St	123rd Ave NE NE 66th St	1,475	8"	$1,205,000	28	M												$1,205

Table 7-2
Proposed Improvements Implementation Schedule (Continued)

CIP No.	Project Description In	From	To	Size Length (LF)	Diameter (in.)	Estimated Cost	Rank Points	Priority Rank	Planned Year of Project and Estimated Cost (x 1,000) 2016	2017	2018	2019	2020	2021	2022	2023	2024	2025	2026-2035	2035+
Annual Sanitary Pipeline Replacement Program (SM14)																				
EX268	~NE 65th Pl NE 66th St	~120th Ave NE ~120th Pl NE	~120th Pl NE ~175' W of 123rd Ave NE	1,100	8"	$899,000	15	L												$899
EX269	~NE 65th St ~124th Ave NE NE 60th St Residential Parking Lot	~119th Ave NE NE 65th St ~124th Ave NE NE 60th St	~124th Ave NE NE 60th St ~170' W of 126th Ave NE ~126th Ave NE	3,725	12", 8"	$3,044,000	34	M												$3,044
EX270	NE 64th St	120th Ave NE	~50' W of 123rd Ave NE	1,075	8"	$878,000	13	L												$878
EX271	NE 62nd St	120th Ave NE	~80' W of 123rd Ave NE	1,100	8"	$899,000	13	L												$899
EX272	120th Pl NE NE 61st St	NE 62nd St 120th Pl NE	NE 61st St ~70' W of 123rd Ave NE	1,100	8"	$899,000	19	L												$899
EX273	122nd Ave NE	NE 62nd St	~185' S of NE 62nd St	200	8"	$164,000	13	L												$164
EX274	Ben Franklin Elementary School			350	8"	$286,000	19	L												$286
EX275	130th Ave NE	~NE 68th Pl	~NE 67th St	300	12"	$251,000	26	L												$251
EX276	NE 59th St	~60' E of Lake Washington Blvd NE	Lakeview Dr	350	8"	$286,000	38	M												$286
EX277	NE 59th St	Lakeview Dr	~175' E of Lakeview Dr	175	8"	$143,000	38	M												$143
EX278	NE 58th St	~50' E of Lake Washington Blvd NE	Lakeview Dr	300	8"	$245,000	38	M												$245
EX279	NE 58th St	Lakeview Dr	~170' E of Lakeview Dr	175	8"	$143,000	38	M												$143
EX280	101st Ct NE	Residential Driveway		250	8"	$205,000	21	L												$205
EX281	NE 55th St 106th Ave NE	Cross Kirkland Corridor NE 55th St	106th Ave NE ~435' S of NE 55th St	1,775	8"	$1,450,000	31	M												$1,450
EX282	104th Ave NE NE 58th St	NE 55th St 104th Ave NE	NE 58th St ~225' E of 105th Ave NE	1,300	8"	$1,062,000	15	L												$1,062
EX283	105th Ave NE	NE 58th St	~365' S of NE 58th St	375	8"	$307,000	15	L												$307
EX284	NE 59th St	106th Ave NE	NE 59th St cul-de-sac	275	8"	$225,000	36	M												$225
EX285	NE 58th St	106th Ave NE	NE 58th St cul-de-sac	125	8"	$103,000	21	L												$103
EX286	NE 59th St 110th Ave NE	108th Ave NE NE 59th St	110th Ave NE NE 58th Pl	800	8"	$654,000	48	H											$654	
EX287	112th Pl NE NE 59th Pl NE 58th Pl	NE 60th St 112th Pl NE 112th Pl NE	NE 58th Pl NE 59th Pl cul-de-sac ~185' E of 112th Pl NE	1,200	8"	$980,000	15	L												$980
EX288	~NE 52nd St (In Lake)	Commercial Parking Lot		200	8"	$300,000	20	L												$300
EX289	Lake Washington Blvd NE Lake Shoreline (Along Lakeshore)	~NE 44th St ~NE 45th St	~NE 45th St ~185' N of NE 52nd St	2,550	24", 18", 12", 8"	$3,456,000	33	M												$3,456
EX290	~NE 53rd St	Lake Washington Blvd NE	~55' E of Lake Washington Blvd NE	75	8"	$62,000	13	L												$62
EX291	Lake Washington Blvd NE	~NE 44th St	NE 52nd St	1,450	8"	$1,184,000	38	M												$1,184
EX292	~NE 48th Pl	Lake Washington Blvd NE	~102nd Ln NE	325	8"	$266,000	64	H								$266				
EX293	~NE 47th St ~95' W of 102nd Ln NE	Lake Washington Blvd NE ~NE 47th St	~75' E of Lake Washington Blvd NE ~NE 46th St	350	8"	$286,000	59	H										$286		
EX294	Cross Kirkland Corridor NE 53rd St 106th Ave NE	~NE 49th St Cross Kirkland Corridor NE 53rd St	NE 53rd St ~270' E of 106th Ave NE ~185' N of NE 53rd St	2,250	8"	$2,060,000	33	M												$2,060
EX295	NE 52nd St 107th Ave NE	Cross Kirkland Corridor NE 52nd St	~70' E of 107th Ave NE 107th Ave NE cul-de-sac	1,525	8"	$1,246,000	29	M												$1,246
EX296	Cross Kirkland Corridor 105th Ave NE	~NE 49th St NE 44th St	NE 44th St ~NE 42nd Pl	2,050	8"	$1,988,000	29	M												$1,988

Table 7-2
Proposed Improvements Implementation Schedule (Continued)

CIP No.	Project Description In	Project Description From	Project Description To	Size Length (LF)	Size Diameter (in.)	Estimated Cost	Rank Points	Priority Rank	Planned Year of Project and Estimated Cost (x 1,000) 2016	2017	2018	2019	2020	2021	2022	2023	2024	2025	2026-2035	2035+
Annual Sanitary Pipeline Replacement Program (SM14)																				
EX297	NE 48th Pl 106th Ave NE ~155' N of NE 48th Pl	Cross Kirkland Corridor ~135' S of NE 48th Pl 106th Ave NE	106th Ave NE ~155' N of NE 48th Pl ~106th Pl NE	1,075	8", 6"	$870,000	41	H												$870
EX298	Residential Easement NE 47th Pl	Cross Kirkland Corridor ~105th Ave NE	~105th Ave NE ~107th Ave NE	1,175	8", 6"	$957,000	17	L												$957
EX299	~NE 46th St 108th Ave NE NE 53rd St 114th Ave NE NE 50th Pl	Cross Kirkland Corridor NE 46th St 108th Ave NE NE 53rd St 114th Ave NE	108th Ave NE NE 53rd St 114th Ave NE Watershed Park NE 50th Pl cul-de-sac	5,575	8"	$4,726,000	38	M												$4,726
EX300	105th Ave NE NE 45th St	NE 46th St 105th Ave NE	NE 45th St ~106th Pl NE	575	8"	$470,000	36	M												$470
EX301	~170' S of NE 45th St ~106th Pl NE NE 45th St 108th Ave NE	~Cross Kirkland Corridor ~170' S of NE 45th St ~106th Pl NE NE 45th St	~106th Pl NE NE 45th St 108th Ave NE ~155' N of NE 45th St	1,350	8"	$1,103,000	21	L												$1,103
EX302	Residential Easement	105th Ave NE	106th Pl NE	400	8"	$327,000	20	L												$327
EX303	NE 48th St 111th Ave NE	108th Ave NE NE 48th St	111th Ave NE NE 50th Pl	1,200	8"	$980,000	38	M												$980
EX304	109th Ave NE NE 49th St ~110th Ave NE	NE 48th St 109th Ave NE NE 49th St	NE 49th St ~110th Ave NE Emerson High School	1,425	8"	$1,164,000	46	H											$1,164	
EX305	~150' W of 109th Ave NE ~NE 47 th Pl	NE 48th St ~150' W of 109th Ave NE	~NE 47th Pl ~109th Ave NE	375	8", 6"	$297,000	30	M												$297
EX306	Residential Easement	109th Ave NE	~109th Pl NE	500	8", 6"	$402,000	30	M												$402
EX307	110th Ave NE NE 47th Pl	NE 48th St 110th Ave NE	NE 47th Pl NE 47th Pl cul-de-sac	350	8"	$286,000	29	M												$286
EX308	~NE 50th Pl	112th Ave NE	~295' E of 112th Ave NE	300	8"	$245,000	27	L												$245
EX309	Lake Washington Blvd NE ~NE Points Dr	~NE 44th St Lake Washington Blvd NE	~NE Points Dr State Route 520	2,800	24", 18", 12"	$2,779,000	66	H								$2,779				
EX310	NE 43rd St	Lake Washington Blvd NE	~102nd Ln NE	375	8"	$307,000	26	L												$307
EX311	~105th Ave NE	Commercial Parking Lot		125	6"	$95,000	13	L												$95
EX312	106th Pl NE	107th Pl NE	105th Ave NE	550	8"	$450,000	23	L												$450
EX313	Residential Easement 107th Pl NE NE 44th St 108th Ave NE NE 42nd Pl	Cross Kirkland Corridor 106th Pl NE 107th Pl NE NE 44th St 107th Pl NE	107th Pl NE NE 44th St 108th Ave NE NE 45th St NE 42nd Pl cul-de-sac	1,800	12", 8"	$1,472,000	32	M												$1,472
EX314	97th Ave NE	~150' S of NE 39th Pl	~NE 39th Pl	150	8"	$123,000	18	L												$123
EX315	~NE 37th Ct 101st Way NE NE 38th Ct	~140' E of 101st Way NE NE 37th Ct 101st Way NE	~260' W of 100th Ln NE NE 38th Ct ~105' E of 101st Way NE	1,325	8"	$1,082,000	5	L												$1,082
EX316	NE 38th Pl	Lake Washington Blvd NE	~180' NW of 107th Ln NE	1,375	12", 8"	$1,218,000	35	M												$1,218
EX317	~NE 39th St	NE 38th Pl	Commercial Parking Lot	200	8"	$164,000	39	M												$164
EX318	~180' NW of 107th Ln NE	NE 38th Pl	Commercial Parking Lot	750	8"	$613,000	36	M												$613
EX319	Northup Way	Lake Washington Blvd NE	~106th Pl NE	1,300	15"	$1,238,000	47	H											$1,238	
EX320	124th Ave NE	NE 116th St	~20' S of NE 116th St	25	12"	$21,000	33	M												$21
EX321	124th Ave NE	~NE 113th Ct	NE 112th Pl	275	12"	$230,000	23	L												$230
EX322	111th Ave NE	NE 53rd St	~NE 50th Pl	675	8"	$552,000	63	H									$552			
Total - Sewer Main Improvements						**$236,158,000**	**---**	**---**	**$0**	**$0**	**$0**	**$0**	**$0**	**$0**	**$0**	**$3,413**	**$2,315**	**$2,373**	**$55,190**	**$172,867**

Table 7-2
Proposed Improvements Implementation Schedule (Continued)

CIP No.	Project Description In	From	To	Size Length (LF)	Diameter (in.)	Estimated Cost	Rank Points	Priority Rank	Planned Year of Project and Estimated Cost (x 1,000) 2016	2017	2018	2019	2020	2021	2022	2023	2024	2025	2026-2035	2035+
						Facility Improvements														
F1	Rose Point Sewer Lift Station Replacement (SS 0073)					$1,110,000	---	---	$1,110											
F2	Trend Lift Station Abandonment					$3,551,000	---	---								$710	$1,420	$1,420		
F3	Waverly Park Lift Station Improvements					$1,178,000	---	---								$236	$471	$471		
Total - Facility Improvements						**$5,839,000**	**---**	**---**	**$1,110**	**$0**	**$0**	**$0**	**$0**	**$0**	**$0**	**$946**	**$1,892**	**$1,892**	**$0**	**$0**
						Miscellaneous and Planning Improvements														
M1	Reclaimed Water (Purple Pipe) Opportunity Fund (SS 0084)					$5,000,000	---	---											$5,000	
M2	Inflow and Infiltration Study					$250,000	---	---								$63	$150	$38		
M3	General Sewer Plan Update (Update Every 10 Years)					$600,000	---	---										$150	$150	$300
Total - Miscellaneous Improvements						**$5,850,000**	**---**	**---**	**$0**	**$0**	**$0**	**$0**	**$0**	**$0**	**$0**	**$63**	**$150**	**$188**	**$5,150**	**$300**
Total Estimated Project Costs of City-funded Improvements						**$294,285,900**	**---**	**---**	**$2,832**	**$5,176**	**$1,815**	**$5,250**	**$5,174**	**$6,480**	**$4,366**	**$6,921**	**$6,857**	**$6,952**	**$69,296**	**$173,167**
						Developer-funded Improvements - 2021 Projections														
DF1	Lake Plaza Lift Station Improvements					$1,257,000	Timing of Project Based on Timing of Future Developments													
~~DF2~~	~~~120th Ave NE~~	~~NE 124th St~~	~~~NE 122nd Way~~	~~1,050~~	~~12"~~	~~$877,000~~	~~Timing of Project Based on Timing of Future Developments~~													
DF3	NE 112th St	120th Ave NE	Cross Kirkland Corridor	250	12"	$209,000	Timing of Project Based on Timing of Future Developments													
DF4	Slater Ave NE	~NE 103rd Pl	~NE 102nd Pl	425	24"	$576,000	Timing of Project Based on Timing of Future Developments													
Total - Developer-funded Improvements - Prior to 2021						**$2,042,000**	**Timing of Projects Based on Timing of Future Developments**													
						Developer-funded Improvements - 2035 Projections														
~~DF5~~	~~W of 120th Ave NE~~	~~~NE 122nd Way~~	~~~NE 120th St~~	~~600~~	~~12"~~	~~$501,000~~	~~Timing of Project Based on Timing of Future Developments~~													
DF6	NE 112th St	117th Pl NE	116th Pl NE	300	12"	$251,000	Timing of Project Based on Timing of Future Developments													
DF7	124th Ave NE	NE 112th Pl	NE 112th St	275	12"	$230,000	Timing of Project Based on Timing of Future Developments													
DF8	NE 97th St	Slater Ave NE	~50' E of Slater Ave NE	50	24"	$45,000	Timing of Project Based on Timing of Future Developments													
DF9	NE 97th St 124th Ave NE NE 95th St	124nd Ln NE NE 97th St 124th Ave NE	124th Ave NE NE 95th St 125th Ave NE	1,175	18"	$1,025,000	Timing of Project Based on Timing of Future Developments													
DF10	128th Ave NE	~75' N of NE 91st Ln	NE 91st Ln	75	15"	$157,000	Timing of Project Based on Timing of Future Developments													
DF11	Waverly Way	~120' NE of Slater Ave NE	~360' NE of 2nd St W	750	18"	$654,000	Timing of Project Based on Timing of Future Developments													
DF12	NE 70th Street	~126th Ave NE	~127th Ave NE	325	12"	$272,000	Timing of Project Based on Timing of Future Developments													
Total - Developer-funded Improvements - Prior to 2035						**$2,634,000**	**Timing of Projects Based on Timing of Future Developments**													
Total Estimated Project Costs of Developer-funded Improvements						**$4,676,000**	**Timing of Projects Based on Timing of Future Developments**													

NOTES:
- Cost estimates for **CIP SM1** through **CIP SM13** and **CIP F1** were provided by the City.
- Estimated costs presented in this table are in 2017 dollars.
- Projects that are struck through were removed because they are located in the area that was acquired by Northshore in 2017 (NE 124th Street Sewer Drainage Basin). Costs for these projects were omitted from this table.

Table 7-3
Annual Sanitary Pipeline Replacement Program Sorted by Priority Ranking

CIP No.	Project Description			Size		Estimated Cost	Rank Points	Priority Rank
	In	From	To	Length (LF)	Diameter (in.)			
Annual Sanitary Pipeline Replacement Program (SM14)								
EX94	9th Ave	3rd St	~125' E of 2nd St	450	8"	$368,000	68	H
EX309	Lake Washington Blvd NE ~NE Points Dr	~NE 44th St Lake Washington Blvd NE	~NE Points Dr State Route 520	2,800	24", 18", 12"	$2,779,000	66	H
EX107	11th Pl	4th St	~150' E of 3rd St	675	8"	$552,000	65	H
EX195	7th Ave S 3rd Pl S	~25' E of State St S 7th Ave S	5th St S ~210' S of 7th Ave S	1,075	8", 6"	$864,000	65	H
EX292	~NE 48th Pl	Lake Washington Blvd NE	~102nd Ln NE	325	8"	$266,000	64	H
EX322	111th Ave NE	NE 53rd St	~NE 50th Pl	675	8"	$552,000	63	H
EX166	6th St	~5th Ave W	1st Ave S	1,675	12", 8"	$1,393,000	62	H
EX146	7th Ave ~165' E of 1st St 7th Ave Alley	1st St 7th Ave ~165' E of 1st St	~80' W of 2nd St 7th Ave Alley ~175' W of 2nd St	850	8"	$694,000	61	H
EX84	15th Ave	1st St	~145' W of 2nd St	425	8"	$347,000	60	H
EX293	~NE 47th St ~95' W of 102nd Ln NE	Lake Washington Blvd NE ~NE 47th St	~75' E of Lake Washington Blvd NE ~NE 46th St	350	8"	$286,000	59	H
EX65	4th St	~230' N of 18th Ave	15th Ave	1,200	8"	$980,000	58	H
EX147	7th Ave	3rd St	~80' E of 2nd St	500	8"	$409,000	58	H
EX78	7th Ave W Alley	5th St W	4th St W	550	8"	$450,000	57	H
EX80	5th St W 16th Ave Market St	16th Ave W Market St 16th Ave	Market St 2nd St ~17th Pl	1,075	8"	$878,000	57	H
EX85	14th Ave	1st St	~130' W of 2nd St	425	8"	$347,000	57	H
EX96	3rd St	Central Way	~17th Ave	4,150	8"	$3,389,000	57	H
EX106	13th Ave	4th St	~135' E of 3rd St	675	8"	$552,000	57	H
EX112	9th Ave	5th St	~130' E of 3rd St	1,000	8"	$817,000	57	H
EX228	~102nd Ave NE ~110' N of NE 64th St	NE 64th St ~102nd Ave NE	~110' N of NE 64th St ~70' W of 103rd Ave NE	525	8"	$429,000	57	H
EX93	10th Ave	3rd St	~115' E of 2nd St	400	8"	$327,000	56	H
EX56	1st St	20th Ave	~19th Pl	500	8"	$409,000	55	H
EX158	8th Ave	~130' W of 6th St	~130' E of 3rd St	1,425	8"	$1,164,000	55	H
EX162	5th Ave	4th St	~160' E of 3rd St	425	8"	$347,000	55	H
EX176	Slater St	Kirkland Ave	Ohde Ave	675	8"	$552,000	55	H
EX115	10th Ave	~175' E of 5th St	~330' W of 8th St	1,025	8"	$837,000	54	H
EX151	5th Ave	3rd St	~85' E of 2nd St	500	8"	$409,000	53	H
EX153	3rd Ave	2nd Pl S	~180' E of 1st St	625	8"	$511,000	53	H
EX237	~104th Pl NE	~NE 64th St	~NE 65th Pl	200	8"	$164,000	53	H

Table 7-3
Annual Sanitary Pipeline Replacement Program Sorted by Priority Ranking (Continued)

CIP No.	Project Description			Size		Estimated Cost	Rank Points	Priority Rank
	In	From	To	Length (LF)	Diameter (in.)			
	Annual Sanitary Pipeline Replacement Program (SM14)							
EX66	4th Pl	20th Ave	~120' N of 19th Ave	525	8"	$429,000	52	H
EX188	2nd Ave S 4th St S	State St S 2nd Ave S	4th St S ~165' S of 2nd Ave S	625	8"	$511,000	52	H
EX204	Slater St S North Ave 115th Pl NE	Kirkland Ave Slater St S ~600' N of North Ave	North Ave 115th Pl NE NE 75th St	1,950	8"	$1,592,000	52	H
EX83	10th Ave	Market St	~135' E of Market St	150	8"	$123,000	51	H
EX114	11th Ave	6th St	~310' W of 8th St	650	8"	$531,000	51	H
EX116	~5th Pl 9th Ave 8th Ave Alley	8th Ave ~5th Pl ~135' E of 5th St	9th Ave ~155' E of 5th St ~90' W of 6th St	850	12", 8"	$698,000	51	H
EX139	2nd St W Market St	7th Ave W Alley 2nd St W	Market St 8th Ave W	175	8"	$143,000	51	H
EX144	8th Ave	1st St	2nd St	525	8"	$429,000	51	H
EX79	Market St	3rd St W	11th Ave W	175	8"	$143,000	50	H
EX111	10th Ave	5th St	~280' E of 3rd St	900	8"	$735,000	50	H
EX140	6th Ave	Market St	~130' W of Market St	150	8"	$123,000	50	H
EX149	6th Ave	~240' W of 4th St	~80' E of 2nd St	825	8"	$674,000	50	H
EX150	5th Ave 2nd St	1st St 5th Ave	2nd St 5th Ave Alley	650	8"	$531,000	50	H
EX160	7th Ave	~130' E of 3rd St	~8th St	2,425	8"	$1,980,000	50	H
EX189	~3rd Ave S 2nd St S	Lake St S ~3rd Ave S	~35 E of Lake St S 4th Ave S	200	8"	$164,000	50	H
EX209	NE 75th St	116th Ave NE	~245' E of 118th Ave NE	1,600	8"	$1,307,000	50	H
EX90	2nd St	10th Ave	18th Ave	2,450	8"	$2,001,000	49	H
EX215	NE 80th St	123rd Ave NE	128th Ave NE	1,675	12", 8"	$1,396,000	49	H
EX87	12th Ave	1st St	~125' W of 2nd St	425	8"	$347,000	48	H
EX113	12th Ave	6th St	~250' W of 8th St	725	8"	$592,000	48	H
EX159	8th Ave	6th St	~360' E of 6th St	375	8"	$307,000	48	H
EX193	5th Ave S	~135' E of State St S	5th St S	775	8"	$633,000	48	H
EX205	NE 80th St (Freeway Crossing)	116th Ave NE	~Kirkland Cemetery	1,700	12"	$1,486,000	48	H
EX286	NE 59th St 110th Ave NE	108th Ave NE NE 59th St	110th Ave NE NE 58th Pl	800	8"	$654,000	48	H
EX38	Forbes Creek Dr	~100th Ave NE	9th St W	750	12", 8"	$619,000	47	H
EX319	Northup Way	Lake Washington Blvd NE	~106th Pl NE	1,300	15"	$1,238,000	47	H
EX186	Kirkland Ave	Kirkland Way	~5th Pl S	650	8"	$531,000	46	H

Table 7-3
Annual Sanitary Pipeline Replacement Program Sorted by Priority Ranking (Continued)

CIP No.	Project Description			Size		Estimated Cost	Rank Points	Priority Rank
	In	From	To	Length (LF)	Diameter (in.)			
Annual Sanitary Pipeline Replacement Program (SM14)								
EX236	NE 68th St 106th Ave NE ~NE 64th St	~95' W of 106th Ave NE NE 68th St 106th Ave NE	106th Ave NE ~NE 64th St ~330' E of 106th Ave NE	1,650	15", 8"	$1,351,000	46	H
EX304	109th Ave NE NE 49th St ~110th Ave NE	NE 48th St 109th Ave NE NE 49th St	NE 49th St ~110th Ave NE Emerson High School	1,425	8"	$1,164,000	46	H
EX91	9th Ave 2nd St	1st St 9th Ave	2nd St 9th Ave Alley	725	8", 6"	$583,000	45	H
EX92	13th Ave	3rd St	~225' W of 3rd St	250	8"	$205,000	45	H
EX132	NE 92nd St	~117th Ave NE	~NE 90th St	375	8"	$307,000	45	H
EX214	~120th Ave NE	~95' N of NE 70th St	~NE 61st St	2,775	12", 8", 6"	$2,275,000	45	H
EX102	6th St	11th Ave	~15th Ave	1,225	8"	$1,001,000	44	H
EX136	128th Ave NE	NE 100th St	NE 95th St	1,250	12"	$1,224,000	44	H
EX141	5th Ave	Market St	~130' W of Market St	150	8"	$123,000	44	H
EX145	8th Ave	3rd St	~85' E of 2nd St	475	8"	$388,000	44	H
EX192	4th Ave S	~45' E of State St S	~4th Pl S	750	8"	$613,000	44	H
EX198	~410' N of 5th Ave S	6th St S	8th St S	675	8"	$552,000	44	H
EX200	5th Ave S 7th St S	6th St S 5th Ave S	7th St S ~8th Ave S	1,375	8"	$1,123,000	44	H
EX67	~165' N of NE 102nd Pl ~235' W of 111th Ave NE	Cross Kirkland Corridor ~165' N of NE 102nd Pl	111th Ave NE ~NE 103rd Pl	850	8"	$694,000	43	H
EX138	128th Ave NE	NE 91st Ln	NE 91st St	100	15"	$190,000	43	H
EX42	100th Ave NE	NE 108th St	Forbes Creek Dr	675	12"	$857,000	42	H
EX86	13th Ave	1st St	~125' W of 2nd St	425	8", 6"	$343,000	42	H
EX88	11th Ave	1st St	~140' W of 2nd St	425	8"	$347,000	42	H
EX108	13th Ave 4th St	5th Ln 13th Ave	4th St ~145' S of 11th Pl	1,275	8"	$1,041,000	42	H
EX124	116th Ave NE	~90' S of NE 88th St	NE 97th St	2,650	8", 6"	$2,158,000	42	H
EX196	Kirkland Ave	6th St	Cross Kirkland Corridor	1,275	12", 8"	$1,059,000	42	H
EX202	10th St S	Kirkland Ave	~4th Ave S	1,025	8"	$1,072,000	42	H
EX248	~NE 68th St ~118th Pl NE (Freeway Crossing)	108th Ave NE NE 70th Pl	118th Pl NE NE 69th Pl	3,925	12", 8"	$3,387,000	42	H

Table 7-3
Annual Sanitary Pipeline Replacement Program Sorted by Priority Ranking (Continued)

CIP No.	Project Description			Size		Estimated Cost	Rank Points	Priority Rank
	In	From	To	Length (LF)	Diameter (in.)			
Annual Sanitary Pipeline Replacement Program (SM14)								
EX30	108th Ave NE ~NE 108th St Forbes Creek Dr ~NE 109th Place	NE 108th St 108th Ave NE ~NE 108th St Forbes Creek Dr	NE 108th St Forbes Creek Dr ~NE 109th Place 120th Ave NE	4,375	36", 15", 12"	$3,709,000	41	H
EX40	Market St	Forbes Creek Dr	~18th Pl	1,700	12", 8"	$1,390,000	41	H
EX61	4th St	19th Ave	~155' S of 19th Ave	175	8"	$143,000	41	H
EX105	5th St	9th Ave	~195' N of 13th Ave	1,500	8", 6"	$1,224,000	41	H
EX110	4th St	10th Ave	~11th Ave	300	8"	$245,000	41	H
EX168	Kirkland Way	6th St	~9th Ln	1,025	8", 6"	$813,000	41	H
EX297	NE 48th Pl 106th Ave NE ~155' N of NE 48th Pl	Cross Kirkland Corridor ~135' S of NE 48th Pl 106th Ave NE	106th Ave NE ~155' N of NE 48th Pl ~106th Pl NE	1,075	8", 6"	$870,000	41	H
EX22	~NE 112th St	I-405	Slater Ave NE	225	24"	$350,000	40	H
EX74	116th Ave NE	~NE 97th Ln	~NE 101st Pl	925	8"	$756,000	40	H
EX184	Kirkland Ave ~State St S	Main St Kirkland Ave	~State St S ~3rd St	425	8"	$347,000	40	H
EX222	Lakeview Dr Lake Washington Blvd NE	~NE 68th Pl ~101st Ct NE	~101st Ct NE ~NE 52nd St	4,675	18", 15", 12", 8"	$3,962,000	40	H
EX57	~19th Pl	20th Ave	~190' E of 20th Ave	1,825	8"	$1,490,000	39	M
EX64	18th Ave	3rd St	~4th Pl	825	8"	$674,000	39	M
EX71	NE 100th St	116th Ave NE	111th Ave NE	1,350	8"	$1,103,000	39	M
EX103	14th Pl	6th St	Peter Kirk Elementary School	325	8"	$266,000	39	M
EX118	9th Ave	6th St	~390' E of 6th St	400	8"	$327,000	39	M
EX148	6th Ave	1st St	~85' W of 2nd St	475	8"	$388,000	39	M
EX190	5th Ave S	~145' E of 2nd St S	~3rd St S	150	8"	$123,000	39	M
EX191	~365' N of 10th Ave S	Lake St S	1st St S	275	8"	$225,000	39	M
EX227	NE 64th St	~35' E of Lake Washington Blvd NE	Lakeview Dr	600	8"	$490,000	39	M
EX251	~NE 66th Pl	108th Ave NE	~108th Pl NE	250	8"	$205,000	39	M
EX255	~435' N of NE 65th St ~170' E of 113th Ave NE 114th Ave NE	113th Ave NE ~520' N of NE 65th St ~605' N of NE 65th St	114th Ave NE ~120' N of NE 65th St ~75' N of NE 65th St	1,300	8", 6"	$1,056,000	39	M
EX256	~113th Ave NE ~NE 64th St NE 63rd St 113th Ave NE ~NE 62nd St	NE 65th St ~113th Ave NE ~113th Ave NE NE 63rd St 113th Ave NE	NE 63rd St 113th Ave NE 113th Ave NE ~NE 62nd St 114th Ave NE	1,200	8"	$980,000	39	M

Table 7-3
Annual Sanitary Pipeline Replacement Program Sorted by Priority Ranking (Continued)

CIP No.	Project Description			Size		Estimated Cost	Rank Points	Priority Rank
	In	From	To	Length (LF)	Diameter (in.)			
	Annual Sanitary Pipeline Replacement Program (SM14)							
EX317	~NE 39th St	NE 38th Pl	Commercial Parking Lot	200	8"	$164,000	39	M
EX48	Slater Ave NE	NE 106th St	NE 105th St	175	30"	$166,000	38	M
EX178	~160' S of NE 85th St	128th Ave NE	~420' E of 128th Ave NE	425	8"	$347,000	38	M
EX181	128th Ave NE	NE 80th St	~NE 81st Pl	400	8"	$327,000	38	M
EX187	2nd Ave S 3rd St S	State St S 2nd Ave S	2nd St S ~140' S of 2nd Ave S	600	8"	$490,000	38	M
EX232	NE 62nd St 102nd Pl NE	Lakeview Dr NE 62nd St	103rd Pl NE ~ 280' N of NE 62nd St	800	8"	$654,000	38	M
EX233	NE 60th St	Lake Washington Blvd NE	Lakeview Dr	450	8"	$368,000	38	M
EX276	NE 59th St	~60' E of Lake Washington Blvd NE	Lakeview Dr	350	8"	$286,000	38	M
EX277	NE 59th St	Lakeview Dr	~175' E of Lakeview Dr	175	8"	$143,000	38	M
EX278	NE 58th St	~50' E of Lake Washington Blvd NE	Lakeview Dr	300	8"	$245,000	38	M
EX279	NE 58th St	Lakeview Dr	~170' E of Lakeview Dr	175	8"	$143,000	38	M
EX291	Lake Washington Blvd NE	~NE 44th St	NE 52nd St	1,450	8"	$1,184,000	38	M
EX299	~NE 46th St 108th Ave NE NE 53rd St 114th Ave NE NE 50th Pl	Cross Kirkland Corridor NE 46th St 108th Ave NE NE 53rd St 114th Ave NE	108th Ave NE NE 53rd St 114th Ave NE Watershed Park NE 50th Pl cul-de-sac	5,575	8"	$4,726,000	38	M
EX303	NE 48th St 111th Ave NE	108th Ave NE NE 48th St	111th Ave NE NE 50th Pl	1,200	8"	$980,000	38	M
EX9	120th Ave NE	~300' S of NE 116th St	~445' S of NE 116th St	150	8"	$123,000	36	M
EX62	Market St	18th Ave W	18th Ave	325	8"	$266,000	36	M
EX82	14th Ave	Market St	~100' E of Market St	125	8"	$103,000	36	M
EX101	15th Ave	6th St	~200' E of 3rd St	1,575	8"	$1,482,000	36	M
EX194	6th Ave S	~35' E of State St S	5th St S	825	8"	$674,000	36	M
EX223	102nd Ave NE NE 65th St 103rd Ave NE	Lakeview Dr 102nd Ave NE NE 65th St	NE 65th St 103rd Ave NE ~85' S of NE 67th St	1,600	8"	$1,307,000	36	M
EX229	NE 64th St	Lakeview Dr	103rd Ave NE	675	8"	$552,000	36	M
EX230	NE 63rd St	~60' E of Lake Washington Blvd NE	Lakeview Dr	525	8"	$429,000	36	M
EX231	NE 62nd St	~50' E of Lake Washington Blvd NE	Lakeview Dr	475	8"	$388,000	36	M
EX235	NE 68th St	~115' W of 106th Ave NE	~200' E of 106th Ave NE	375	12", 8"	$308,000	36	M
EX249	111th Ave NE	NE 68th St	~NE 67th St	200	8"	$164,000	36	M
EX284	NE 59th St	106th Ave NE	NE 59th St cul-de-sac	275	8"	$225,000	36	M

Table 7-3
Annual Sanitary Pipeline Replacement Program Sorted by Priority Ranking (Continued)

CIP No.	Project Description			Size		Estimated Cost	Rank Points	Priority Rank
	In	From	To	Length (LF)	Diameter (in.)			
Annual Sanitary Pipeline Replacement Program (SM14)								
EX300	105th Ave NE NE 45th St	NE 46th St 105th Ave NE	NE 45th St ~106th Pl NE	575	8"	$470,000	36	M
EX318	~180' NW of 107th Ln NE	NE 38th Pl	Commercial Parking Lot	750	8"	$613,000	36	M
EX3	NE 116th St	~200' W of 117th Ave NE	~117th Ave NE	200	8"	$164,000	35	M
EX4	NE 116th St (Freeway Crossing)	120th Ave NE	124th Ave NE	1,450	24", 8"	$1,354,000	35	M
EX41	20th Ave	Market St	~230' E of 1st St	650	8"	$531,000	35	M
EX81	1st St 17th Pl	18th Ave 1st St	~85' S of 17th Pl 17th Pl cul-de-sac	600	8"	$490,000	35	M
EX109	~12th Ave	5th St	5th Pl	325	8"	$266,000	35	M
EX156	Commercial Alley Park Ln	~245' W of Main St Commercial Alley	Park Ln ~125' E of Lake St S	125	8"	$103,000	35	M
EX167	6th Ave	6th St	7th Ave	850	8"	$694,000	35	M
EX185	1st Ave S	State St S	2nd St S	275	8"	$225,000	35	M
EX254	113th Ave NE NE 67th St	NE 65th St 113th Ave NE	NE 67th St ~114th Ave NE	1,100	8"	$899,000	35	M
EX316	NE 38th Pl	Lake Washington Blvd NE	~180' NW of 107th Ln NE	1,375	12", 8"	$1,218,000	35	M
EX75	Slater Ave NE	~NE 100th Pl	NE 100th Pl	225	24"	$350,000	34	M
EX161	4th St	Central Way	7th Ave	875	8"	$715,000	34	M
EX252	NE 66th Pl 110th Ave NE NE 65th St	NE 66th Pl cul-de-sac NE 66th Pl 110th Ave NE	110th Ave NE NE 65th St 114th Ave NE	1,700	8"	$1,388,000	34	M
EX269	~NE 65th St ~124th Ave NE NE 60th St Residential Parking Lot	~119th Ave NE NE 65th St ~124th Ave NE NE 60th St	~124th Ave NE NE 60th St ~170' W of 126th Ave NE ~126th Ave NE	3,725	12", 8"	$3,044,000	34	M
EX5	103rd Pl NE NE 114th Pl NE 115th Pl 105th Pl NE 105th Pl NE	NE 113th Pl 103rd Pl NE 103rd Pl NE NE 115th Pl ~NE 114th Ln	~NE 115th Ln ~115' W of 103rd Pl NE 105th Pl NE NE 116th St NE 114th St	1,850	8"	$1,511,000	33	M
EX18	NE 112th St 110th Ave NE	111th Ave NE NE 112th St	110th Ave NE ~NE 114th St	925	8"	$756,000	33	M
EX39	Market St	Forbes Creek Dr	20th Ave	625	8"	$511,000	33	M
EX44	108th Ave NE	NE 108th St	Forbes Creek Dr	650	8"	$766,000	33	M

Table 7-3
Annual Sanitary Pipeline Replacement Program Sorted by Priority Ranking (Continued)

CIP No.	Project Description			Size		Estimated Cost	Rank Points	Priority Rank
	In	From	To	Length (LF)	Diameter (in.)			
Annual Sanitary Pipeline Replacement Program (SM14)								
EX121	112th Ave NE	NE 87th St	~115' S of NE 100th St	3,275	12", 8"	$2,675,000	33	M
EX134	NE 90th St	~245' W of 120th Ave NE	120th Ave NE	300	24"	$436,000	33	M
EX199	6th St S	~410' N of 5th Ave S	~445' N of 9th Ave S	1,300	12", 8"	$1,078,000	33	M
EX208	~115' N of NE 75th St	116th Ave NE	118th Ave NE	475	8"	$388,000	33	M
EX224	NE 68th Pl	102nd Ave NE	103rd Ave NE	675	8"	$552,000	33	M
EX289	Lake Washington Blvd NE Lake Shoreline (Along Lakeshore)	~NE 44th St ~NE 45th St	~NE 45th St ~185' N of NE 52nd St	2,550	24", 18", 12", 8"	$3,456,000	33	M
EX294	Cross Kirkland Corridor NE 53rd St 106th Ave NE	~NE 49th St Cross Kirkland Corridor NE 53rd St	NE 53rd St ~270' E of 106th Ave NE ~185' N of NE 53rd St	2,250	8"	$2,060,000	33	M
EX320	124th Ave NE	NE 116th St	~20' S of NE 116th St	25	12"	$21,000	33	M
EX12	100th Ave NE	NE 110th St	NE 113th St	1,025	8"	$1,123,000	32	M
EX36	Rose Point Ln	~140' S of NE 108th Ave	~NE 108th Ave	150	8"	$248,000	32	M
EX171	114th Ave NE NE 88th St	NE 87th St 114th Ave NE	NE 88th St 116th Ave NE	900	8"	$735,000	32	M
EX220	~NE 68th St	Lake St S	~Lakeview Dr	1,000	8"	$817,000	32	M
EX313	Residential Easement 107th Pl NE NE 44th St 108th Ave NE NE 42nd Pl	Cross Kirkland Corridor 106th Pl NE 107th Pl NE NE 44th St 107th Pl NE	107th Pl NE NE 44th St 108th Ave NE NE 45th St NE 42nd Pl cul-de-sac	1,800	12", 8"	$1,472,000	32	M
EX13	NE 113th St 101st Ave NE NE 113th Pl	100th Ave NE NE 113th St 101st Ave NE	101st Ave NE NE 113th Pl ~106th Ave NE	2,125	8"	$1,735,000	31	M
EX15	104th Ave NE	NE 108th St	~NE 112th Pl	1,575	8"	$1,286,000	31	M
EX131	NE 90th St Slater Ave NE ~117th Ave NE	116th Ave NE NE 90th St Slater Ave NE	Slater Ave NE ~117th Ave NE ~265' S of NE 95th St	1,500	8"	$1,225,000	31	M
EX152	4th Ave	3rd St	2nd St	575	8"	$470,000	31	M
EX157	Main St	Park Ln	~155' N of Kirkland Ave	275	15"	$234,000	31	M
EX165	Kirkland Ave	3rd St	~5th St	1,100	8"	$899,000	31	M
EX206	116th Ave NE	NE 80th St	NE 74th St	1,525	12", 8"	$1,268,000	31	M
EX210	NE 74th St	116th Ave NE	~118th Ave NE	475	8"	$388,000	31	M
EX281	NE 55th St 106th Ave NE	Cross Kirkland Corridor NE 55th St	106th Ave NE ~435' S of NE 55th St	1,775	8"	$1,450,000	31	M

Table 7-3
Annual Sanitary Pipeline Replacement Program Sorted by Priority Ranking (Continued)

CIP No.	Project Description			Size		Estimated Cost	Rank Points	Priority Rank
	In	From	To	Length (LF)	Diameter (in.)			
	Annual Sanitary Pipeline Replacement Program (SM14)							
EX17	NE 112th St	106th Ave NE	~109th Pl NE	975	8"	$796,000	30	M
EX25	NE 110th St 106th Ave NE	108th Ave NE NE 110th St	106th Ave NE NE 112th St	1,175	8"	$960,000	30	M
EX50	NE 107th Pl	~125th Ave NE	Mark Twain Park	1,700	8"	$1,388,000	30	M
EX59	2nd St	19th Ave	~130' N of 18th Ave	550	8"	$450,000	30	M
EX60	3rd St	19th Ave	~130' N of 18th Ave	550	8"	$450,000	30	M
EX97	17th Ave	4th St	17th Ave cul-de-sac	225	8"	$184,000	30	M
EX120	9th Ave	~4555' E of 6th St	~275' E of 8th St	775	8"	$633,000	30	M
EX129	NE 91st St	116th Ave NE	~265' W of 116th Ave NE	300	8"	$245,000	30	M
EX143	Market St	Central Way	4th Ave	600	12"	$501,000	30	M
EX155	Lakeshore Plaza	~1st St	~55' W of 1st St	75	12"	$63,000	30	M
EX225	102nd Pl NE NE 67th St 104th Ave NE	NE 65th St 102nd Pl NE NE 67th St	NE 67th St 104th Ave NE ~NE 68th Pl	1,350	8"	$1,103,000	30	M
EX238	~NE 64th St 105th Ave NE ~NE 65th Pl	Cross Kirkland Corridor ~NE 64th St 105th Ave NE	105th Ave NE ~NE 65th Pl ~135' W of 106th Ave NE	625	8"	$511,000	30	M
EX305	~150' W of 109th Ave NE ~NE 47 th Pl	NE 48th St ~150' W of 109th Ave NE	~NE 47th Pl ~109th Ave NE	375	8", 6"	$297,000	30	M
EX306	Residential Easement	109th Ave NE	~109th Pl NE	500	8", 6"	$402,000	30	M
EX2	NE 116th St	111th Pl NE	111th Ave NE	150	8"	$123,000	29	M
EX16	NE 112th St	~ 155' W of 104th Ave NE	~ 195' E of 105th Ave NE	850	8"	$694,000	29	M
EX24	NE 110th St 105th Ave NE	105th Ave NE NE 110th St	105th Ave NE ~NE 111th Ave Pl	1,025	8"	$837,000	29	M
EX35	128th Ave NE NE 108th Pl	NE 107th Pl 128th Ave NE	NE 108th Pl 129th Pl NE	1,000	8"	$817,000	29	M
EX51	128th Ave NE	NE 107th Pl	NE 106th Pl	450	8"	$368,000	29	M
EX52	NE 106th Pl	128th Ave NE	129th Pl NE	625	8"	$511,000	29	M
EX70	NE 103rd St	~114th Pl NE	~290' W of 116th Ave NE	175	8"	$143,000	29	M
EX117	6th St	Central Way	10th Ave	1,350	8"	$1,103,000	29	M
EX122	NE 97th St ~114th Ave NE	112th Ave NE NE 97th St	~130' W of 116th Ave NE Observation Dr	1,500	8"	$1,225,000	29	M
EX179	NE 84th St	128th Ave NE	~130th Ave NE	600	8"	$490,000	29	M
EX201	8th St S	~3rd Ave S	~130' N of 9th Ave S	1,850	8"	$1,511,000	29	M

Table 7-3
Annual Sanitary Pipeline Replacement Program Sorted by Priority Ranking (Continued)

CIP No.	Project Description			Size		Estimated Cost	Rank Points	Priority Rank
	In	From	To	Length (LF)	Diameter (in.)			
			Annual Sanitary Pipeline Replacement Program (SM14)					
EX211	120th Ave NE	NE 75th St	~195' S of NE 73rd St	850	8"	$694,000	29	M
EX246	9th Ave S ~112th Ave NE	6th St S 9th Ave S	~112th Ave NE ~10th Ave S	1,400	8"	$1,143,000	29	M
EX264	NE 70th St	~250' W of 120th Ave NE	~80' E of 123rd Ave NE	925	8"	$756,000	29	M
EX295	NE 52nd St 107th Ave NE	Cross Kirkland Corridor NE 52nd St	~70' E of 107th Ave NE 107th Ave NE cul-de-sac	1,525	8"	$1,246,000	29	M
EX296	Cross Kirkland Corridor 105th Ave NE	~NE 49th St NE 44th St	NE 44th St ~NE 42nd Pl	2,050	8"	$1,988,000	29	M
EX307	110th Ave NE NE 47th Pl	NE 48th St 110th Ave NE	NE 47th Pl NE 47th Pl cul-de-sac	350	8"	$286,000	29	M
EX6	106th Ave NE	NE 112th St	~NE 114th St	775	8"	$633,000	28	M
EX163	~130' N of Central Way	4th St	~210' W of 4th St	225	8"	$184,000	28	M
EX183	Commercial Alley	Kirkland Ave	Lake St S	575	12", 8"	$480,000	28	M
EX212	116th Ave NE	~NE 70th Pl	~NE 68th Pl	725	8"	$592,000	28	M
EX260	NE 60th St 114th Ave NE	108th Ave NE NE 60th St	114th Ave NE ~NE 55th St	3,300	8"	$2,863,000	28	M
EX267	~NE 67th St 123rd Ave NE	~120th Ave NE NE 67th St	123rd Ave NE NE 66th St	1,475	8"	$1,205,000	28	M
EX19	~111th Ave NE ~NE 112th Pl	NE 112th St ~111th Ave NE	~NE 113th Pl ~112th Ave NE	1,025	8"	$1,174,000	27	L
EX21	120th Ave NE	~NE 112th Pl	~NE 113th Pl	350	8"	$286,000	27	L
EX27	106th Ave NE ~NE 111th Ave Pl	NE 110th St ~108th Ave NE	~NE 111th Ave Pl ~109th Ave NE	500	8"	$409,000	27	L
EX29	NE 108th St	108th Ave NE	109th Ave NE	275	8"	$225,000	27	L
EX43	Forbes Creek Dr NE 107th Pl	NE 107th Pl Forbes Creek Dr	~109th Ave NE Forbes Creek Dr	1,150	8"	$1,280,000	27	L
EX54	NE 104th St	130th Ave NE	~80' E of 130th Ave NE	100	8"	$82,000	27	L
EX58	1st St	19th Ave	~125' N of 18th Ave	550	8"	$450,000	27	L
EX63	18th Ave	Market St	~240' E of 2nd St	1,075	8"	$878,000	27	L
EX73	114th Ave NE 114th Pl NE	NE 100th St 114th Ave NE	114th Pl NE ~NE 103rd Pl	475	8"	$388,000	27	L
EX95	3rd St	18th Ave	~17th Pl	250	8"	$205,000	27	L
EX197	6th St S	Kirkland Ave	3rd Ave S	775	12"	$647,000	27	L
EX218	128th Ave NE ~128th Pl NE NE 75th St	NE 80th St ~NE 78th St 128th Pl NE	~NE 78th St NE 75th St ~130' W of 130th Ave NE	1,875	8"	$1,531,000	27	L

Table 7-3
Annual Sanitary Pipeline Replacement Program Sorted by Priority Ranking (Continued)

CIP No.	Project Description			Size		Estimated Cost	Rank Points	Priority Rank
	In	From	To	Length (LF)	Diameter (in.)			
Annual Sanitary Pipeline Replacement Program (SM14)								
EX266	122nd Ave NE ~135' N of NE 68th Pl ~123rd Ave NE NE 68th Pl	NE 70th St 122nd Ave NE ~135' N of NE 68th Pl ~123rd Ave NE	~135' N of NE 68th Pl ~123rd Ave NE NE 68th Pl ~122nd Pl NE	1,075	8"	$878,000	27	L
EX308	~NE 50th Pl	112th Ave NE	~295' E of 112th Ave NE	300	8"	$245,000	27	L
EX7	108th Ave NE	NE 112th St	~NE 115th Ln	1,225	8"	$1,001,000	26	L
EX31	~111th Ct NE ~111th Ave NE ~NE 110th St	~NE 108th St NE 110th St ~111th Ct NE	NE 110th St NE 112th St 112th Ave NE	1,650	8"	$1,348,000	26	L
EX47	~115th Pl NE	NE 104th St	~NE 103rd Pl	300	8"	$245,000	26	L
EX98	3rd Pl	15th Ave	3rd Pl cul-de-sac	375	8"	$307,000	26	L
EX100	5th Pl	15th Ave	~225' N of 15th Ave	250	8"	$205,000	26	L
EX119	8th St	7th Ave	11th Ave	1,300	8"	$1,062,000	26	L
EX164	Peter Kirk Park			50	8"	$41,000	26	L
EX217	127th Pl NE	NE 80th St	~375' S of NE 80th St	375	8"	$307,000	26	L
EX275	130th Ave NE	~NE 68th Pl	~NE 67th St	300	12"	$251,000	26	L
EX310	NE 43rd St	Lake Washington Blvd NE	~102nd Ln NE	375	8"	$307,000	26	L
EX28	108th Ave NE	NE 108th St	NE 110th St	500	12", 8"	$410,000	25	L
EX68	111th Ave NE	NE 100th St	~NE 103rd Pl	950	8"	$776,000	25	L
EX72	112th Ave NE Highlands Park NE 103rd Pl	NE 100th St 112th Ave NE Highlands Park	NE 102nd St NE 103rd Pl 114th Pl NE	1,150	8"	$939,000	25	L
EX89	11th Ave	1st St	2nd St	575	8"	$470,000	25	L
EX180	128th Ave NE NE 83rd St	NE 84th St 128th Ave NE	NE 83rd St 131st Ave NE	1,350	8"	$1,103,000	25	L
EX239	~NE 63rd St	Cross Kirkland Corridor	106th Ave NE	600	8"	$490,000	25	L
EX247	8th St S ~435' S of 9th Ave S	9th Ave S 8th St S	~NE 68th St ~111th Ave NE	875	8"	$715,000	25	L
EX10	98th Ave NE	Old Market St Trail	~NE 108th St	2,250	36"	$2,679,000	24	L
EX130	NE 90th St	112th Ave NE	~180' W of 116th Ave NE	975	8"	$796,000	24	L
EX216	126th Ave NE	NE 80th St	NE 78th Pl	450	8"	$368,000	24	L
EX263	119th Ave NE	NE 70th Pl	~NE 67th Pl	800	8"	$654,000	24	L
EX265	~NE 68th Pl	120th Ave NE	~160' W of 122nd Ave NE	525	8"	$429,000	24	L
EX37	Lake Shoreline (Along Lakeshore)	~5th Ave W	Rose Point Ln	4,175	12", 8"	$6,263,000	23	L

Table 7-3
Annual Sanitary Pipeline Replacement Program Sorted by Priority Ranking (Continued)

CIP No.	Project Description			Size		Estimated Cost	Rank Points	Priority Rank
	In	From	To	Length (LF)	Diameter (in.)			
Annual Sanitary Pipeline Replacement Program (SM14)								
EX55	Market St	20th Ave W	7th St W	125	8"	$103,000	23	L
EX123	NE 95th St ~114th Ave NE	112th Ave NE NE 95th St	~130' W of 116th Ave NE ~210' N of NE 95th St	1,350	8"	$1,103,000	23	L
EX128	NE 91st St	112th Ave NE	~180' E of 114th Ave NE	750	8"	$613,000	23	L
EX172	NE 87th St	112th Ave NE	~95 W of 116th Ave NE	1,025	8", 6"	$819,000	23	L
EX174	~NE 85th St	Cross Kirkland Corridor	~80' E of Cross Kirkland Corridor	100	8"	$82,000	23	L
EX243	~NE 62nd St	105th Ave NE	106th Ave NE	225	8"	$184,000	23	L
EX244	106th Ave NE ~NE 57th St	~NE 62nd St 106th Ave NE	NE 57th St NE 55th St	2,100	8", 6"	$1,705,000	23	L
EX250	111th Ave NE	NE 68th St	~120' N of NE 67th St	250	8"	$205,000	23	L
EX253	112th Ave NE	NE 65th St	NE 67th St	275	8"	$225,000	23	L
EX257	~NE 62nd St	111th Ave NE	~113th Ave NE	950	8"	$776,000	23	L
EX312	106th Pl NE	107th Pl NE	105th Ave NE	550	8"	$450,000	23	L
EX321	124th Ave NE	~NE 113th Ct	NE 112th Pl	275	12"	$230,000	23	L
EX23	NE 112th St	~105' W of 127th Pl NE	127th Pl NE	125	12"	$105,000	22	L
EX53	129th Pl NE	NE 106th Pl	129th Pl NE cul-de-sac	200	8"	$164,000	22	L
EX104	4th St	13th Ave	~14th Ave	475	8"	$573,000	22	L
EX203	~340' S of Kirkland Ave	10th St S	~380' E of 10th St S	400	8"	$476,000	22	L
~~EX1~~	~~NE 118th St~~	~~117th Ave NE~~	~~118th Ave NE~~	~~250~~	~~8"~~	~~$205,000~~	~~21~~	~~L~~
EX20	~118th Ave NE	NE 112th St	~NE 113th Pl	450	8"	$368,000	21	L
EX45	111th Ave NE	Cross Kirkland Corridor	~25' SE of Cross Kirkland Corridor	25	8"	$21,000	21	L
EX133	~Slater Ave NE	~NE 92nd St	~NE 91st St	325	18"	$284,000	21	L
EX170	NE 88th St	112th Ave NE	~113th Ln NE	450	8"	$368,000	21	L
EX221	State St S NE 68th St ~104th Ave NE	10th Ave S State St S NE 68th St	NE 68th St ~104th Ave NE ~10th Ave S	1,050	8"	$858,000	21	L
EX234	NE 60th St ~103rd Pl NE	Lakeview Dr NE 60th St	~65' E of Lakeview Dr ~150' S of NE 60th St	225	8", 6"	$176,000	21	L
EX241	NE 60th St ~104th Ave NE 105th Ave NE	~104th Ave NE NE 60th St NE 60th St	105th Ave NE ~NE 59th St ~NE 59th St	1,100	8", 6"	$894,000	21	L
EX242	105th Ave NE	~NE 63rd St	~NE 60th Ln	650	8"	$531,000	21	L
EX245	NE 60th Ln	106th Ave NE	~225' E of 106th Ave NE	250	8"	$205,000	21	L

[1] Projects that are struck through were removed because they are located in the area that was acquired by Northshore in 2017 (NE 124th Street Sewer Drainage Basin). Costs for these projects were omitted from this table.

Table 7-3
Annual Sanitary Pipeline Replacement Program Sorted by Priority Ranking (Continued)

CIP No.	Project Description			Size		Estimated Cost	Rank Points	Priority Rank
	In	From	To	Length (LF)	Diameter (in.)			
	Annual Sanitary Pipeline Replacement Program (SM14)							
EX259	112th Ave NE NE 61st Pl	NE 62nd St 112th Ave NE	NE 61st Pl ~113th Ave NE	900	8"	$735,000	21	L
EX280	101st Ct NE	Residential Driveway		250	8"	$205,000	21	L
EX285	NE 58th St	106th Ave NE	NE 58th St cul-de-sac	125	8"	$103,000	21	L
EX301	~170' S of NE 45th St ~106th Pl NE NE 45th St 108th Ave NE	~Cross Kirkland Corridor ~170' S of NE 45th St ~106th Pl NE NE 45th St	~106th Pl NE NE 45th St 108th Ave NE ~155' N of NE 45th St	1,350	8"	$1,103,000	21	L
EX288	~NE 52nd St (In Lake)	Commercial Parking Lot		200	8"	$300,000	20	L
EX302	Residential Easement	105th Ave NE	106th Pl NE	400	8"	$327,000	20	L
EX26	~NE 108th Pl	NE 110th St	~NE 111th Ave Pl	575	8"	$470,000	19	L
EX32	NE 111th Pl	~129th Pl NE	~130th Ave NE	225	8"	$184,000	19	L
EX46	~NE 107th St	116th Ave NE	~170' W of 116th Ave NE	175	8"	$143,000	19	L
EX69	~165' N of NE 102nd Pl ~131' W of 112th Ave NE 112th Ave NE NE 103rd Pl	111th Ave NE ~165' N of NE 102nd Pl ~165' N of NE 102nd Pl 112th Ave NE	112th Ave NE NE 102nd Pl NE 103rd Pl NE 103rd Pl cul-de-sac	875	8"	$715,000	19	L
EX99	5th St	15th Ave	~265' N of 15th Ave	275	8"	$225,000	19	L
EX137	NE 94th St 129th Ave NE 130th Ave NE	NE 94th St cul-de-sac NE 94th St NE 94th St	130th Ave NE 129th Ave NE cul-de-sac ~NE 94th Ct	700	8"	$572,000	19	L
EX272	120th Pl NE NE 61st St	NE 62nd St 120th Pl NE	NE 61st St ~70' W of 123rd Ave NE	1,100	8"	$899,000	19	L
EX274	Ben Franklin Elementary School			350	8"	$286,000	19	L
EX142	Waverly Way	Market St	~400' NW of Market St	400	18"	$349,000	18	L
EX314	97th Ave NE	~150' S of NE 39th Pl	~NE 39th Pl	150	8"	$123,000	18	L
EX8	109th Ave NE	NE 112th St	~NE 115th Ln	1,250	8"	$1,021,000	17	L
EX14	101st Ave NE NE 112th Pl 103rd Ave NE	NE 113th St 101st Ave NE NE 112th Pl	NE 112th Pl 103rd Ave NE ~NE 113th St	1,100	8"	$899,000	17	L
EX49	124th Ave NE 124th Ave NE	~145' N of NE 104th St NE 103rd Pl	~165' S of NE 104th St ~90' S of NE 103rd Pl	425	12", 8"	$350,000	17	L
EX125	NE 94th St	112th Ave NE	~195' S of NE 95th St	850	8"	$694,000	17	L
EX126	114th Ave NE NE 94th St ~290' W of 116th Ave NE	NE 94th St 114th Ave NE NE 94th St	NE 94th St ~290' W of 116th Ave NE ~NE 94th Pl	625	8"	$511,000	17	L

Table 7-3
Annual Sanitary Pipeline Replacement Program Sorted by Priority Ranking (Continued)

CIP No.	Project Description			Size		Estimated Cost	Rank Points	Priority Rank
	In	From	To	Length (LF)	Diameter (in.)			
			Annual Sanitary Pipeline Replacement Program (SM14)					
EX127	NE 92nd St	112th Ave NE	~140' W of 116th Ave NE	1,000	8"	$817,000	17	L
EX154	Central Way	~2nd St	Market St	850	30"	$804,000	17	L
EX175	~3rd Ave	Cross Kirkland Corridor	~80' E of Cross Kirkland Corridor	100	8"	$82,000	17	L
EX182	Lake Plaza Lift Station			25	18"	$22,000	17	L
EX213	~119th Ave NE	NE 70th Pl	Holy Family School	375	8"	$307,000	17	L
EX258	111th Pl NE	NE 62nd St	~115' N of NE 60th St	525	8"	$429,000	17	L
EX298	Residential Easement NE 47th Pl	Cross Kirkland Corridor ~105th Ave NE	~105th Ave NE ~107th Ave NE	1,175	8", 6"	$957,000	17	L
EX77	Waverly Park Way 6th St W	Waverly Beach Park Waverly Park Way	6th St W 10th Ave W	250	15", 8"	$206,000	16	L
EX219	NE 76th St 130th Ave NE ~NE 77th Ct	128th Pl NE NE 76th St 130th Ave NE	130th Ave NE ~NE 77th Ct ~131st Ave NE	1,250	8"	$1,021,000	16	L
EX11	98th Ave NE	Old Market St Trail	~NE 113th Pl	425	12", 8"	$593,000	15	L
EX33	126th Pl NE NE 109th St	NE 107th Pl 126th Pl NE	NE 109th St 127th Pl NE	975	8"	$796,000	15	L
EX34	127th Ave NE	NE 107th Pl	~NE 108th St	225	8"	$184,000	15	L
EX261	~NE 68th Pl 117th Ave NE NE 67th St ~116th Pl NE	116th Ave NE ~NE 68th Pl 117th Ave NE NE 67th St	117th Ave NE NE 67th St 116th Pl NE 116th Ave NE	1,425	8"	$1,164,000	15	L
EX268	~NE 65th Pl NE 66th St	~120th Ave NE ~120th Pl NE	~120th Pl NE ~175' W of 123rd Ave NE	1,100	8"	$899,000	15	L
EX282	104th Ave NE NE 58th St	NE 55th St 104th Ave NE	NE 58th St ~225' E of 105th Ave NE	1,300	8"	$1,062,000	15	L
EX283	105th Ave NE	NE 58th St	~365' S of NE 58th St	375	8"	$307,000	15	L
EX287	112th Pl NE NE 59th Pl NE 58th Pl	NE 60th St 112th Pl NE 112th Pl NE	NE 58th Pl NE 59th Pl cul-de-sac ~185' E of 112th Pl NE	1,200	8"	$980,000	15	L
EX173	114th Ave NE NE 86th St	NE 87th St 114th Ave NE	NE 86th St NE 86th St cul-de-sac	600	8"	$490,000	13	L
EX240	NE 61st Ct	104th Ave NE	~125' W of 104th Ave NE	125	6"	$95,000	13	L
EX262	NE 67th Pl	117th Ave NE	NE 68th Pl	625	8"	$511,000	13	L
EX270	NE 64th St	120th Ave NE	~50' W of 123rd Ave NE	1,075	8"	$878,000	13	L
EX271	NE 62nd St	120th Ave NE	~80' W of 123rd Ave NE	1,100	8"	$899,000	13	L
EX273	122nd Ave NE	NE 62nd St	~185' S of NE 62nd St	200	8"	$164,000	13	L

Table 7-3
Annual Sanitary Pipeline Replacement Program Sorted by Priority Ranking (Continued)

CIP No.	Project Description			Size		Estimated Cost	Rank Points	Priority Rank
	In	From	To	Length (LF)	Diameter (in.)			
Annual Sanitary Pipeline Replacement Program (SM14)								
EX290	~NE 53rd St	Lake Washington Blvd NE	~55' E of Lake Washington Blvd NE	75	8"	$62,000	13	L
EX311	~105th Ave NE	Commercial Parking Lot		125	6"	$95,000	13	L
EX135	NE 95th St	125th Ave NE	126th Ave NE	375	18"	$512,000	12	L
EX169	Residential Easement	~3rd Ave	~55' S of 3rd Ave	75	8",	$62,000	11	L
EX76	Waverly Park Way	Waverly Beach Park	10th Ave W Alley	50	12"	$42,000	5	L
EX315	~NE 37th Ct 101st Way NE NE 38th Ct	~140' E of 101st Way NE NE 37th Ct 101st Way NE	~260' W of 100th Ln NE NE 38th Ct ~105' E of 101st Way NE	1,325	8"	$1,082,000	5	L
EX226	~NE 66th Ln	NE 66th Ln	~120' W of Lakeview Dr	100	8"	$82,000	3	L
EX177	~130th Ave NE NE 85th St	~NE 86th St ~130th Ave NE	NE 85th St ~80' E of 130th Ave NE	250	8"	$205,000	1	L
EX207	Lake Washington High School			475	8"	$388,000	1	L
Total - Sewer Main Improvements						**$236,158,000**	**---**	**---**

[1] Projects that are struck through were removed because they are located in the area that was acquired by Northshore in 2017 (NE 124th Street Sewer Drainage Basin). Costs for these projects were omitted from this table.

THIS PAGE INTENTIONALLY LEFT BLANK

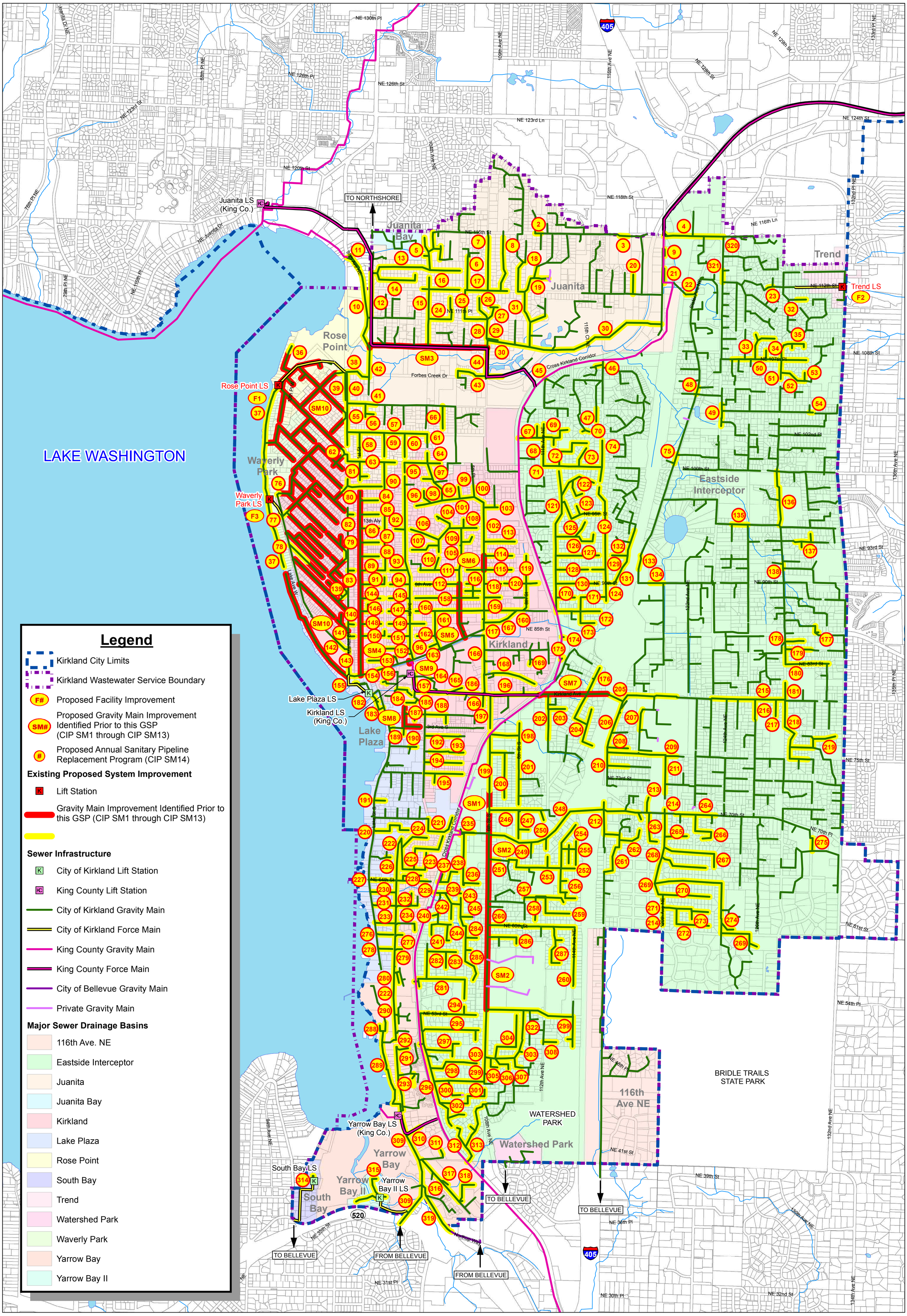

COORDINATE SYSTEM: NAD 1983 HARN STATEPLANE WASHINGTON NORTH FIPS 4601 FEET

RH2 ENGINEERING

NORTH

1 inch = 1,000 feet

0 500 1,000 2,000 Feet

DRAWING IS FULL SCALE WHEN BAR MEASURES 2"

CITY OF KIRKLAND WASHINGTON

Figure 7-1
Existing Sewer Deficiencies
City of Kirkland General Sewer Plan

Vicinity Map

This map is a graphic representation derived from the City of Kirkland Geographic Information System. It was designed and intended for City of Kirkland staff use only; it is not guaranteed to survey accuracy. This map is based on the best information available on the date shown on this map.

Any reproduction or sale of this map, or portions thereof, is prohibited without express written authorization by the City of Kirkland.

This material is owned and copyrighted by the City of Kirkland.

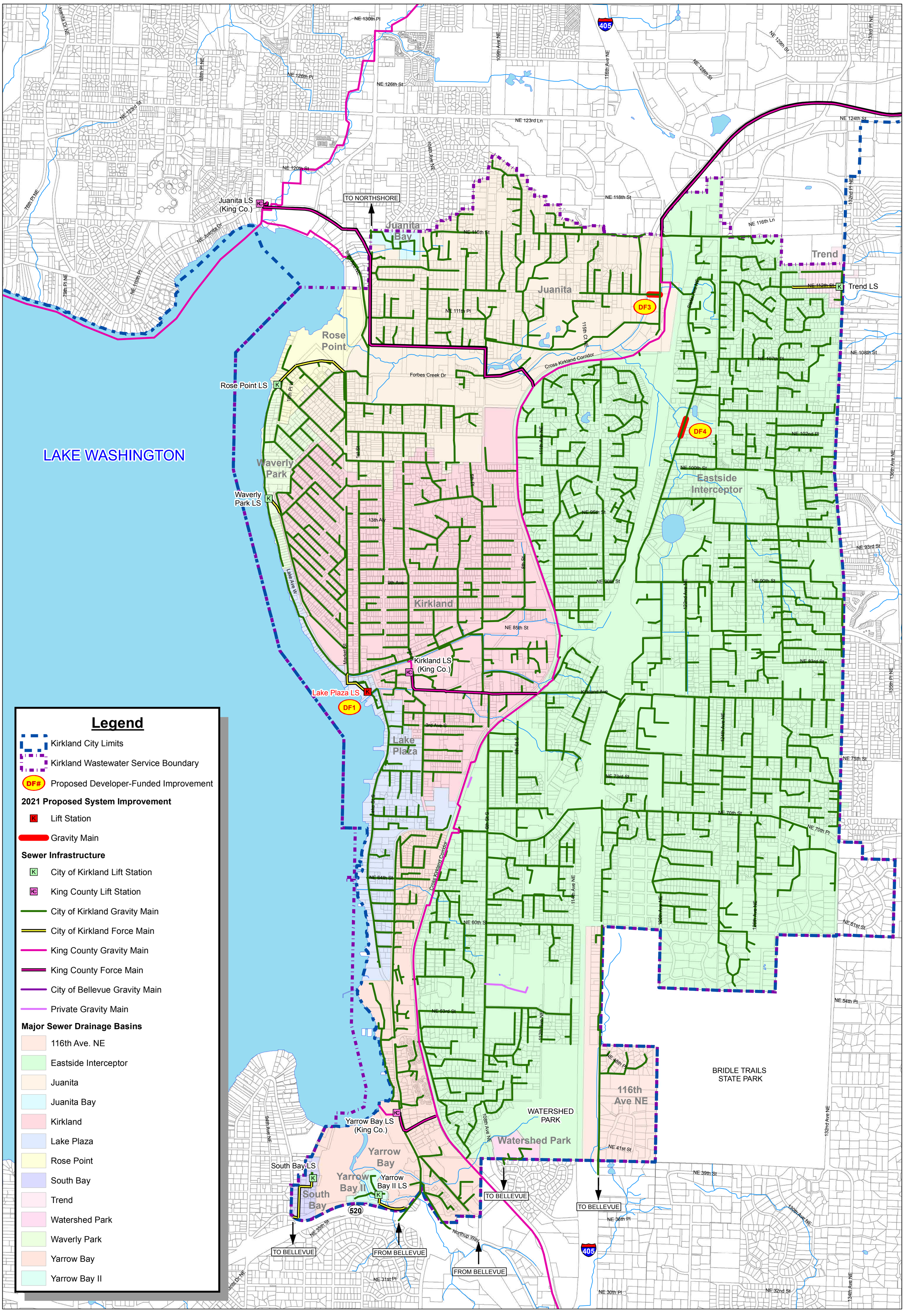

COORDINATE SYSTEM: NAD 1983 HARN STATEPLANE WASHINGTON NORTH FIPS 4601 FEET

RH2

NORTH

1 inch = 1,000 feet

0 500 1,000 2,000 Feet

DRAWING IS FULL SCALE WHEN BAR MEASURES 2"

CITY OF KIRKLAND WASHINGTON

Figure 7-2
Projected 2021 Sewer Deficiencies
City of Kirkland General Sewer Plan

Vicinity Map

This map is a graphic representation derived from the City of Kirkland Geographic Information System. It was designed and intended for City of Kirkland staff use only; it is not guaranteed to survey accuracy. This map is based on the best information available on the date shown on this map.

Any reproduction or sale of this map, or portions thereof, is prohibited without express written authorization by the City of Kirkland.

This material is owned and copyrighted by the City of Kirkland.

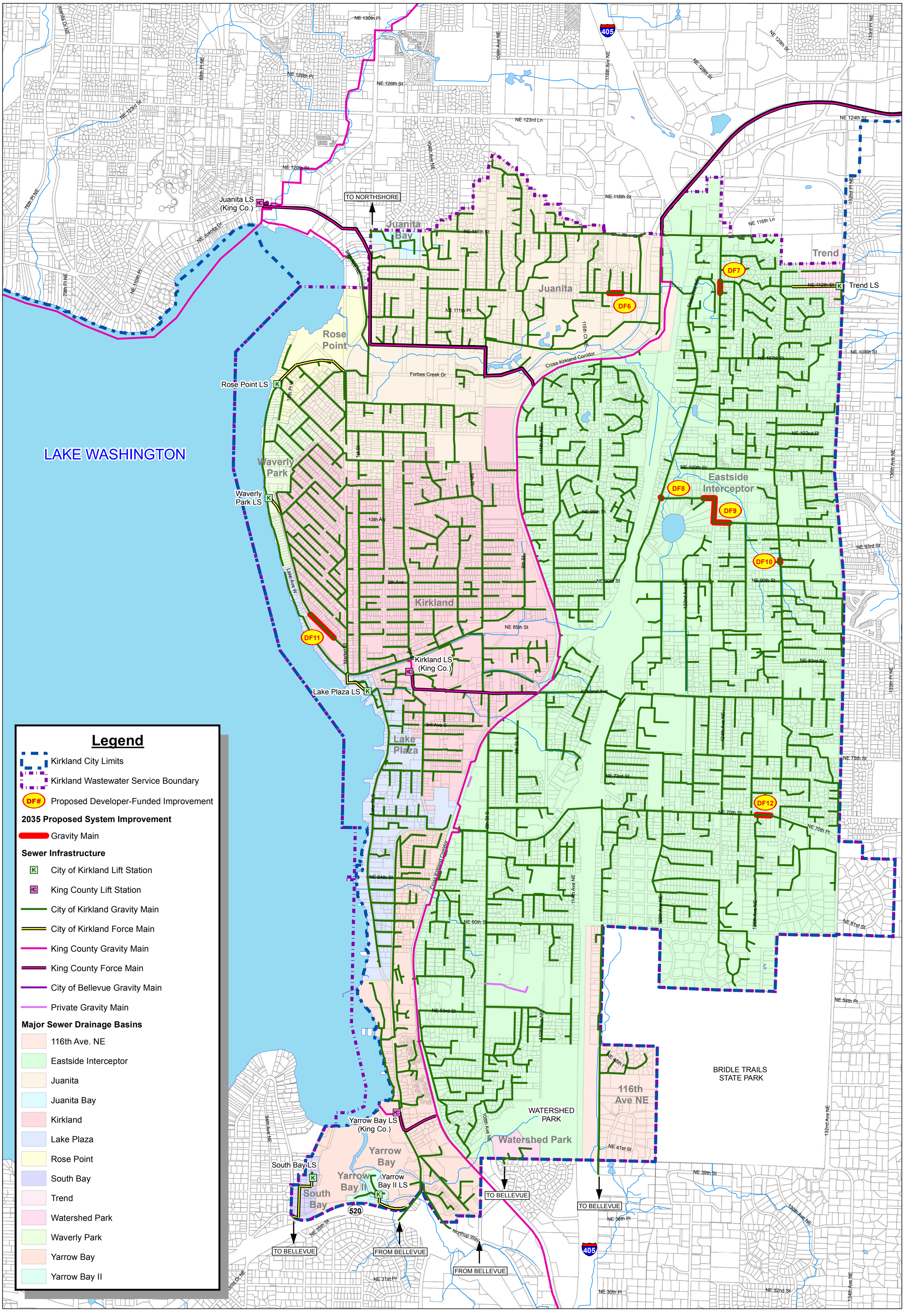

COORDINATE SYSTEM: NAD 1983 HARN STATEPLANE WASHINGTON NORTH FIPS 4601 FEET

RH2 ENGINEERING

NORTH

1 inch = 1,000 feet

0 500 1,000 2,000 Feet

DRAWING IS FULL SCALE WHEN BAR MEASURES 2"

CITY OF KIRKLAND WASHINGTON

Figure 7-3
Projected 2035 Sewer Deficiencies
City of Kirkland General Sewer Plan

Vicinity Map

This map is a graphic representation derived from the City of Kirkland Geographic Information System. It was designed and intended for City of Kirkland staff use only; it is not guaranteed to survey accuracy. This map is based on the best information available on the date shown on this map.

Any reproduction or sale of this map, or portions thereof, is prohibited without express written authorization by the City of Kirkland.

This material is owned and copyrighted by the City of Kirkland.

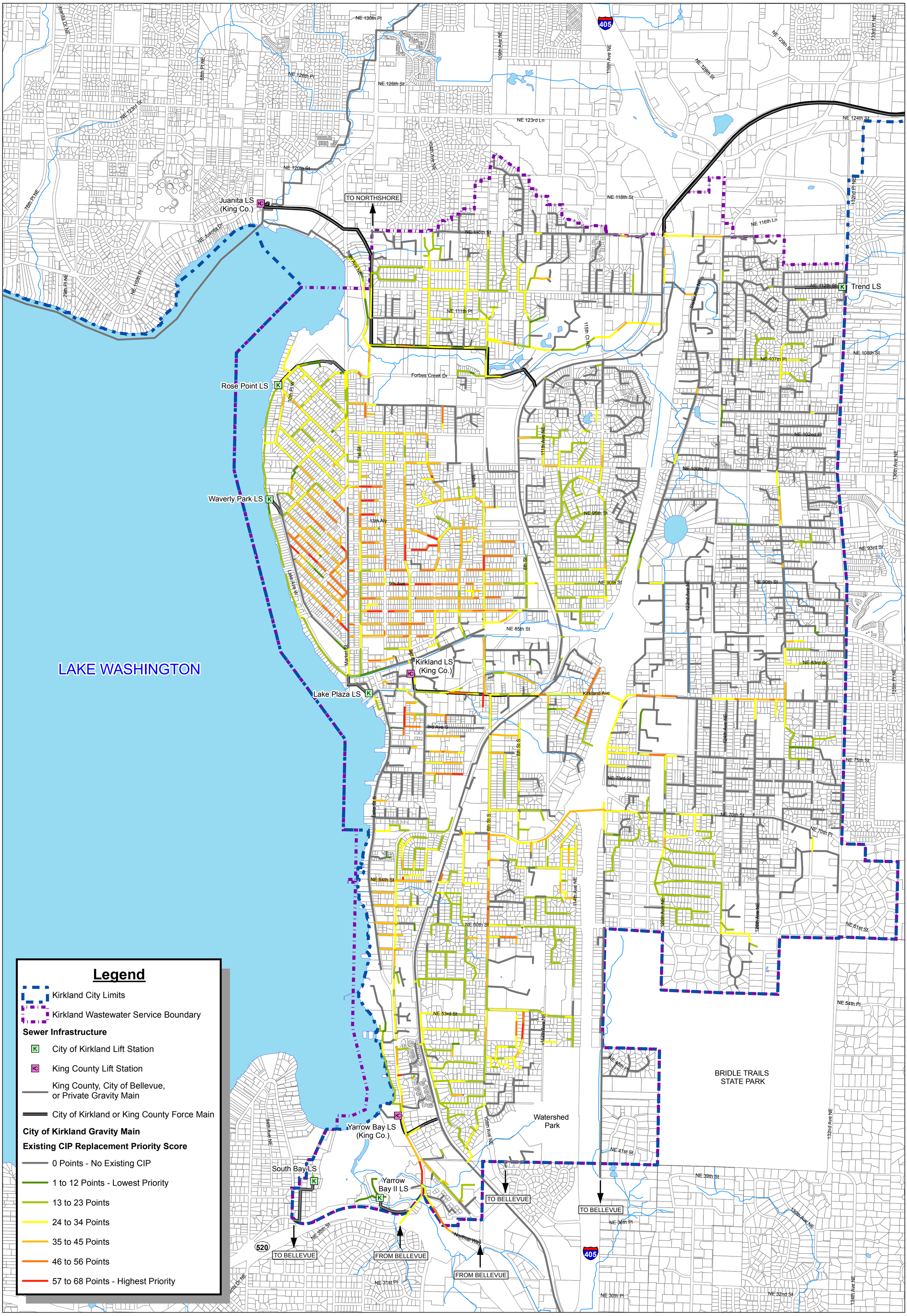

COORDINATE SYSTEM: NAD 1983 HARN STATEPLANE WASHINGTON NORTH FIPS 4601 FEET

RH2 ENGINEERING

NORTH

1 inch = 1,000 feet

0 500 1,000 2,000 Feet

DRAWING IS FULL SCALE WHEN BAR MEASURES 2"

CITY OF KIRKLAND WASHINGTON

Figure 7-4
Existing CIP Priority Score
City of Kirkland General Sewer Plan

Vicinity Map

This map is a graphic representation derived from the City of Kirkland Geographic Information System. It was designed and intended for City of Kirkland staff use only; it is not guaranteed to survey accuracy. This map is based on the best information available on the date shown on this map.

Any reproduction or sale of this map, or portions thereof, is prohibited without express written authorization by the City of Kirkland.

This material is owned and copyrighted by the City of Kirkland.

Operations and Maintenance

8

INTRODUCTION

The City of Kirkland's (City) sewer system operations and maintenance (O&M) program consists of the following elements.

- Normal Operations
- Preventative Maintenance
- Emergency Operations
- Maintenance

NORMAL OPERATIONS

City Personnel

The City's Department of Public Works functions under the direction of a Public Works Director, who is appointed by the City Manager. The current wastewater O&M staff consist of maintenance and service personnel that function under the direction of the Utility Manager and Water/Wastewater Division Supervisor, as shown in **Chart 8-1**. The sewer system tasks that are performed by the O&M staff include inspection, testing, installation, and repair of system facilities, routine operation and preventive maintenance, recordkeeping, administrative tasks, general clerical work, and corrective or breakdown maintenance required in response to emergencies.

Chart 8-1
Organization Chart

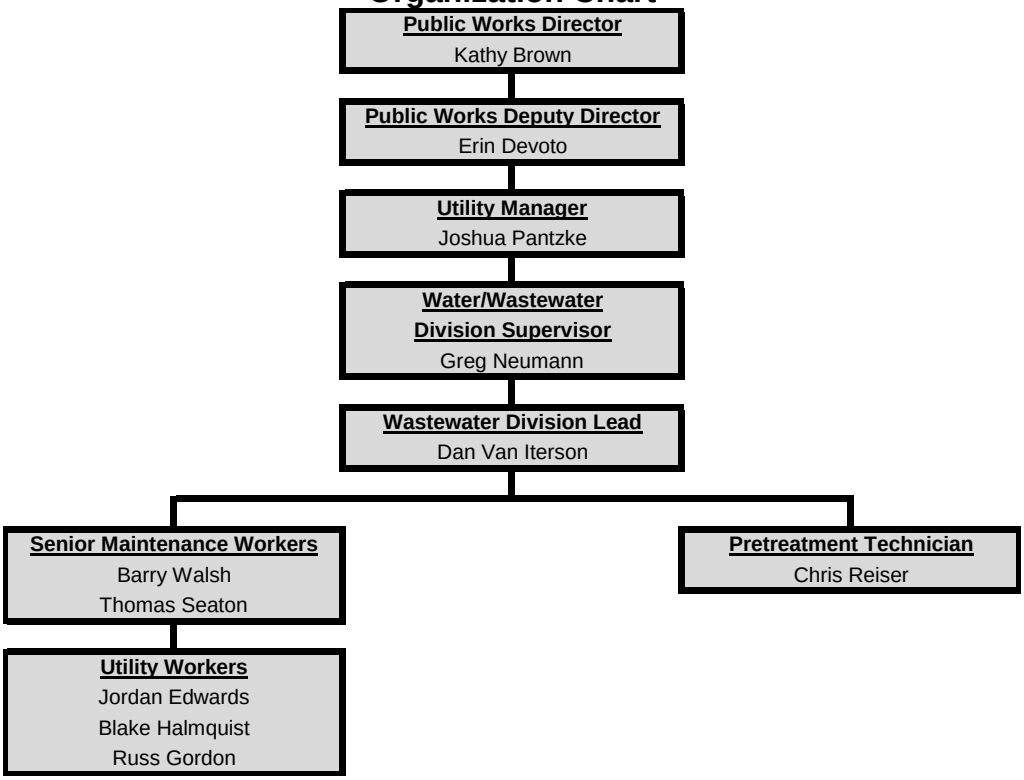

Personnel Responsibilities

The key responsibilities of the sewer O&M staff are summarized below.

Public Works Director – Directs the activities of all divisions in the Public Works Department. Coordinates strategic, financial, and operational activities with other City departments and oversees the operation and administration of the City's Water, Wastewater, Stormwater, Street and Grounds, and Operations Divisions.

Public Works Deputy Director – Under the direction of the Public Works Director, provides leadership and manages all divisions in the Public Works Department in accordance with professional and administrative standards, municipal ordinances, and general established policies. Assists the Public Works Director in the day-to-day operations of the Public Works Department, personnel, budget, administration and work program tasks and oversees the activities of the Public Works Department in the Public Works Director's absence.

Utility Manager – Plans, directs, organizes, and administers all activities of the Water, Wastewater, and Stormwater Divisions to provide efficient, effective, and timely services. Performs a full range of managerial duties that are complex in both breadth and depth. Responds to issues that are often obscure, politically sensitive, and have considerable public exposure. Responsible for personnel management, financial administration, long-range strategic planning, and development and implementation of complex operational changes. Manages and coordinates regional wastewater utility activities with other cities, districts, State of Washington (State) agencies, and regional organizations for recommendation to the Public Works Director, Public Works Deputy Director, City Manager, and City Council.

Water/Wastewater Division Supervisor – Plans, directs, organizes, and administers all activities of the Water and Wastewater Divisions to provide efficient, effective, and timely services. Performs a full range of managerial duties that are complex in both breadth and depth. Responds to issues that are often obscure, politically sensitive, and have considerable public exposure. Responsible for personnel management, financial administration, long-range strategic planning, and development and implementation of complex operational changes.

Wastewater Division Lead – Under the direction of the Water/Wastewater Division Supervisor. Oversees the scheduling of daily sewer O&M staff. Plans, organizes, and supervises the work of employees assigned to the maintenance staff. Trains staff as necessary.

Senior Maintenance Worker – Performs maintenance of the City's sewer system and appurtenances. Coordinates field crew activities. May operate heavy and specialized equipment.

Utility Worker – Performs general operational, maintenance, repair, and construction tasks ensuring the effective operations of the City's sewer system. May operate heavy and specialized equipment. Performs varied manual labor.

Pretreatment Technician – Performs compliance inspections. Monitors and samples wastewater discharges to determine classification. Assists with development and implementation of compliance and education information to eliminate fats, oils, and grease (FOG), as well as non-dispersible products within the City's sewer collection wastewater system.

Staff Certification

Table 8-1 shows the current certifications of the City's wastewater O&M staff. It is City policy to maintain a well-qualified, technically trained staff. The City annually allocates funds for personnel training, certification, and membership in professional organizations. The City believes that the time and money invested in training, certification, and professional organizations are repaid many times in improved safety, skills, and confidence.

Table 8-1
Staff Certification

Employee	Position	Certification(s)
Joshua Pantzke	Utility Manager	WWC-1
Dan Van Iterson	Lead	WWC-2, CCS
Barry Walsh	Senior Maintenance Worker	N/C
Thomas Seaton	Senior Maintenance Worker	WWC-1, PACP
Jordan Edwards	Utility Worker	WWC-1
Blake Halmquist	Utility Worker	WWC-1
Russ Gordon	Utility Worker	WWC-1
Chris Reiser	Pretreatment Technician	WWC-2

CERTIFICATION DEFINITIONS:
-WWC - Wastewater Collection Specialist
-PACP - Pipeline Assessment and Certification Program
-CCS - Cross-connection Control Specialist
-N/C - None Currently

Available Equipment

The City's Department of Public Works has several types of equipment available to the Wastewater Division for the daily O&M routine of the sewer system. The equipment is stored at the City's maintenance facility. If additional equipment is required for specific projects, the City will rent or contract with a local contractor for the services needed. The City has a central fleet operation, and other divisions and departments have equipment that can supplement that assigned to the Wastewater Division, if needed. The City also maintains a central warehouse of supplies that is adequate for routine (and most emergency) needs. There is a computerized inventory system that lists all "in-stock" supplies, including location and quantity. A list of major equipment used in the normal operation of the sewer system is shown in **Table 8-2**. In addition, equipment from other City divisions, such as Water, Stormwater, and Public Grounds, is available if needed.

Table 8-2
Wastewater Division Equipment List

Vehicle ID No.	Description
Wastewater Division Equipment	
U-10	2015 Ford F550 Utility Truck
K-02	2015 Ford E450 Pipeline Inspection Camera Truck
V-03	2006 International Aquatech Eductor Truck
F-19	2008 F550 2/3 Yard Dump Body with Crane
PU-76	2009 Ford F150 Pickup
Green	Portable 25KW Emergency Generator - Trailer Mounted
	Miscellaneous Small Tools, etc.
Equipment Available from Other Departments/Divisions	
TL-37 and TL-38	2013 Olympic Tilt Backhoe Trailer
TR-11 and TR-12	2009 Case 580SM Backhoe (4x2)
PU-71, PU-77, and PU-78	2008 Ford F350 Pickup Extended Cab
D-01 and D-03	2006 International 5-yard Dumptruck
TL-6A and TL-15A	1998 Atlas Copco Air Compressor
	Miscellaneous Small Tools, etc.
Communications Equipment	
	Cell Phones for All Division Members

Service, Equipment, and Supply Vendors

The list in **Table 8-3** identifies the typical vendors for service, materials, and supplies. The City maintains adequate supplies and materials for normal operation. The suppliers are local and maintain adequate materials for unusual needs.

Table 8-3
Service, Equipment, and Supply Vendors List

Name	Address	Phone	Products
Ace Hardware	6613 132nd Ave NE Kirkland, WA 98033	425-376-0327	Small equipment and plumbing parts
Allwest Underground	8419 219th St SE Woodinville, WA 98072	425-398-2353	Submersible pump
Atwood Fabricating	PO Box 12765 Mill Creek, WA 98082	425-486-4608	Birdcage, alum atrium debris barrier, and trash racks
Cadman Building Materials	18816 NE 80th St Redmond, WA 98052	425-868-7334	Fast Patch and calcium
Central Welding Co.	13305 38th Ave NE Marysville, WA 98271	360-658-5617	Uniforms
Cessco, Inc.	926 5th Ave S Kent, WA 98032	425-291-9292	Gas
Contech Engineered Solutions	16445 Collections Center Drive Chicago, IL 60693	800-338-1122	Storm filters
Cues	3600 Rio Vista Ave, Orlando FL 32805	407-849-0190	Camera repairs and accessories
DMH Industrial	2701 Hewitt Avenue Everett, WA 98201	425-259-3124	Pump motor service and parts
EJ USA, Inc.	PO Box 644873 Pittsburgh, PA 15264	800-626-4653	Castings
Goodsell Power Equipment	11414 120th Ave NE Kirkland, WA 98033	425-766-8877	Small equipment and repair
Grainger Industrial Supply	2221 120th Ave NE Bellevue, WA 98005	425-643-7754	Coated gloves
Granite	4116 Bakerview Spur Bellingham, WA 98226	360-671-2251	Concrete risers
HD Fowler	PO Box 160 Bellevue, WA 98009	425-746-8400	PVC pipe
Home Depot	18333 120th Ave NE Bothell, WA 98011	425-806-9300	Small equipment and parts
Industrial Scientific	1001 Oakdale Road Oakdale, PA 15071	412-788-4353	Parts for iNET system
Lowe's Home Centers	11959 Northup Way Bellevue, WA 98005	425-646-9031	Small equipment and parts
Masons Supply Co.	6018 234th St SE Woodinville, WA 98072	425-487-6161	Speed plugs
NAPA	11626 Slater Ave NE Kirkland, WA 98034	425-823-2251	Parts for generator
Owen	PO Box 30959 Portland, OR 97294	800-992-3656	Cameras
RH2 Engineering, Inc.	22722 29th Dr SE, Suite 210 Bothell, WA 98021	425-951-5400	Professional services
Sanderson Safety Supply Co.	1101 SE 3rd Avenue Portland, OR 97214	503-238-5700	Gloves
Sound Safety Products Co.	PO Box 5496 Everett, WA 98206	425-259-0026	Uniforms and safety equipment
Tacoma Screw Products	2001 Center Street Tacoma, WA 98409	800-562-8192	Screws, tape, and cable ties
Verizon	---	---	Telemetry
Waste Management	Columbia Ridge Landfill 18177 Cedar Springs Lane Arlington, OR 97812	541-454-2030	Disposal

Routine Operations

Routine operations involve the analysis, formulation, and implementation of procedures to ensure the facilities are functioning efficiently and meeting the demands of the system. The utility's maintenance procedures are good, with repairs being made promptly.

Continuity of Service

As a municipality, the City has the structure, stability, authority, and responsibility to ensure that sewer service will be continuous. For example, changes in the City Council or staff would not have a pronounced effect on the City's customers or quality of service.

Operations and Maintenance Records

Facilities Operations and Maintenance Manuals

O&M manuals are available for staff members' reference. These manuals are kept on file in the equipment maintenance file at the maintenance office. The City intends to maintain its policies of requiring complete O&M manuals for all new equipment and facilities.

Mapping and As-built Drawing Records

Maintenance of drawings is essential to maintenance crews, City planners, developers, and anyone else needing to know how the sewer system is laid out throughout the City. For this reason, multiple copies of drawings are kept. One copy of record drawings and mapping information is submitted to the City on Mylar. These drawings are tagged and stored for future reference. A database is used to track drawing location and information. A Geographic Information System (GIS) master drawing of the sewer system is maintained by the Public Works Department GIS technician to provide an accurate sewer system map for use by all City personnel. The master drawing is created from record and field drawings that contain sewer main information such as size, material, depth, and the year installed. The drawing records are currently available through the City's online interactive mapping portal (maps.kirkland.gov). Personnel in the Wastewater Division are equipped with portable tablets and have access to this interactive mapping portal remotely during routine field work.

Operations and Maintenance Records

Records are stored at the maintenance office or in the City's computer database for the following items.

- Pump motor tests
- Wastewater flow records
- Wastewater system maintenance
- Sewer collection notes
- Side sewer connections
- Sewer main cleaning/inspection

Safety Procedures and Equipment

Safety is the concern and responsibility of all sewer O&M staff. To maintain the highest level of safety, the City actively educates and trains employees as to safe working procedures. Safety equipment and

other resources are always available to employees. The City is fully dedicated to providing a safe and secure work environment for each of its employees.

The following procedures are to be followed for O&M tasks that involve the most common potential work place hazards in the City's sewer system.

Working in Confined Spaces

Standard Procedure – Follow State requirements for confined space entry.

Working around Heavy Equipment

Standard Procedure – Obtain proper training and follow all safety procedures. Use noise protection equipment and follow standard Labor and Industries (L&I) safety procedures.

Working in Traffic Areas

Standard Procedure – Wear proper clothing and provide adequate signage and flagging for work area. Follow standard Washington State Department of Transportation and L&I safety procedures. Certified flaggers are to be used when traffic management requires flagging around a work site.

Working on or around Tall Structures

Standard Procedure – Follow proper safety harness procedures for working on tall structures and follow standard L&I safety procedures.

Working in or around Pump Stations

Standard Procedure – Obtain proper training and follow all safety procedures for working on pumps and electrical equipment. Use noise protection equipment.

Working on Asbestos Cement (AC) Pipe

Standard Procedure – Obtain proper training and follow all safety procedures for working with asbestos materials.

The sewer utility personnel are required to take training courses regarding the following topics: asbestos cement pipe handling; confined spaces; hazardous waste; fall protection; hearing protection; competent persons; electrical hazards; heavy equipment operation; CPR; first aid; traffic flagging; lockout-tagout; and blood-borne pathogens.

The City's facilities are equipped with confined space entry equipment, oxygen-gas meters, and lockout-tagout equipment. Each City vehicle is equipped with first aid and blood-borne handling kits. The City also owns flagging signs and equipment for safe handling of traffic.

The Public Works Department follows all appropriate Occupational Safety and Health Administration (OSHA) and Washington Industrial Safety and Health Act (WISHA) regulations in its day to day operations and complies with the following State requirements.

- Washington Administrative Code (WAC) 296-809 – Entry into confined spaces.
- WAC 296-155-650 to 66411 Part N – Shoring of open ditches.
- WAC 296-155-429 – Lockout-tagout for work on energized or de-energized equipment or circuits.

- WAC 296-155 Part C1 – Fall restraint for access to pump stations, vaults, and manholes.
- *Manual on Traffic Control Devices* (MUTCD) – Traffic control for work in the public right-of-way.

EMERGENCY OPERATIONS

Capabilities

The City is well equipped to accommodate short-term system failures and abnormalities. The City's capabilities are as follows.

Emergency Equipment

The City is equipped with the necessary tools to deal with common emergencies. If a more serious emergency should develop, the City will hire a local contractor who has a stock of spare parts necessary to make repairs to alleviate the emergency condition.

Emergency Telephone

Key or on-call personnel can be reached by calling the City's Public Works Department at 425-587-3900. If an emergency occurs outside of normal working hours, the after-hours service contacts the Public Works on-call person. This person checks the emergency situation and calls the necessary crew to respond and resolve the situation.

On-call Personnel

The on-call person is equipped with a service vehicle and required to respond to a call within 30 minutes. A list of emergency telephone numbers is provided to each on-call employee. New employees are not placed on-call until they are familiar with the systems and maintenance procedures and are properly certified as may be required.

Material Readiness

Some critical repair parts, tools, and equipment are on-hand and kept in fully operational condition. As repair parts are used, they are re-ordered. Inventories are kept current and are adequate for most common emergencies that can reasonably be anticipated. The City has ready access to an inventory of repair parts, including parts required for repair of each type and size of pipe within the service area. Additionally, the City has been provided with after-hours emergency contact phone numbers for key material suppliers, which gives the City 24-hour access to parts not kept in inventory.

PREVENTIVE MAINTENANCE

Maintenance schedules that meet or exceed the manufacturer's recommendations have been established for all critical components in the sewer system. The following schedule is used as a minimum for preventive maintenance, and manufacturers' recommendations should be followed where conflict exists.

Sewer Collection System

Frequency	Task or Activity
Monthly	Clean Downtown Kirkland sewer mains with known FOG problems.
Every 1 to 6 Months, Depending on History of Maintenance in Area	Inspect, rod, and clean sewer lines with known root intrusion and/or FOG problems. Sewer lines included in these additional "hot spot" cleaning activities are selected based on historical maintenance logs, operator experience, and sewer main video inspection results.
Every 6 Months	Flush difficult access sewer mains.
Annually	Inspect all manholes.
Every 3 Years	Clean entire sewer collection system.
Every 5 Years	Video inspect all sewer mains. Routine sewer main maintenance and repairs based on video inspections.

Sewage Lift Stations

Frequency	Task or Activity
Daily	Receive and analyze telemetry readings.
Weekly	Evaluate pump station reports.
Every 2 Weeks	Clean Lake Plaza Lift Station wetwell.
Monthly	Change filters, clean probes, clean priming tanks, and run vibration tests.
Annually	Clean all lift station wetwells, except Lake Plaza.
As Needed	Change motor oil.
As Needed	Take inventory of parts, pumps, and motors.
As Needed	Routine maintenance of lift station structures and surrounding site.

Engine Generator Sets

Note: The City contracts with a service company to conduct all maintenance on the generators at the lift stations and the portable generator. Generator maintenance is not performed by City personnel.

Frequency	Task or Activity
Weekly	Exercise generators under load.
As Needed	Operate to achieve normal operating temperatures; observe output.
As Needed	Routine maintenance in accordance with manufacturer's recommendations.
As Needed	Replace fluids and filters in accordance with manufacturer's recommendations (or more frequently depending on amount of use).
As Needed	Perform tune-up; replace parts as necessary.

Telemetry and Control System

Frequency	Task or Activity
Daily	Backup program and data.
As Needed	Visually inspect cabinets and panels for damage, dust, and debris.
As Needed	Inspect inside of cabinets and panels for damage, dust, and debris.
As Needed	Vacuum clean all modules.
As Needed	Test alarm indicator units.
As Needed	Clean and flush all pressure sensitive devices.

Frequency	*Task or Activity*
As Needed	Visually inspect all meters to coordinate remote stations.
As Needed	Check master and remote telemetry units for proper operation; repair as necessary.

Tools and Equipment

Frequency	*Task or Activity*
Rolling Stock	
Weekly	Check all fluid levels and brakes. Fluid levels and brakes are checked each time the equipment is used if less than weekly.
As Needed	Replace fluids and filters in accordance with manufacturer's recommendations (or more frequently depending on type of use); preventative maintenance per manufacturer's recommendations.
Tools	
As Needed	Clean after each use; lubricate and maintain as necessary; inspect for damage and wear before each use; preventative maintenance performed per manufacturer's recommendation.

STAFFING

The preventive maintenance procedures, as well as the normal and emergency operations of the utility, are described in the previous sections. The hours of labor and supervisory activity required to effectively provide these ongoing O&M schedules form the basis for determining adequate staffing levels.

Current Staff

As previously indicated, the City's Wastewater Division staff currently includes nine personnel assigned to the operation and maintenance of the sewer system. The staff is made up of supervisory personnel and utility workers as shown in **Chart 8-1**.

Staffing Requirements

The estimated number of staff and hours of work recommended to provide optimum operation and maintenance of the sewer system is shown in **Table 8-4**. This table identifies the typical staffing time for maintenance tasks, operational tasks, capital improvements tasks, and construction of sewer collection system facilities as presented in Water Pollution Control Federation Manual of Practice No. 7, *Operation and Maintenance of Wastewater Collection Systems*. **Table 8-4** does not include some of the staff that are needed to operate a sewer system, such as clerks and construction inspectors, due to assistance the Wastewater Division receives from other divisions and departments.

Table 8-4
Staffing Recommendation

Population	29,481	25,000	50,000		29,481	25,000	50,000
Occupational Title	**City's Wastewater Division**	**Recommended Number of Staff[1]**			**City's Wastewater Division**	**Recommended Man Hours per Week[1]**	
Utility Manager[1]	1	1.0	1	1	13	24	20	40
Supervisor[1]	1	0.2	-	1	20	7	-	40
Lead[1]	1	1.0	1	1	10	24	20	40
Senior Maintenance[1]	2	1.2	1	2	80	31	20	80
Utility Workers[1]	3	2.2	2	3	120	71	60	120
Maintenance Equipment Operator	-	1.2	1	2	-	47	40	80
Construction Equipment Operator	-	1.0	1	1	-	24	20	40
Laborer	-	2.0	2	2	-	47	40	80
Maintenance Mechanic II[2]	-	0.4	-	-	-	16	-	-
Maintenance Mechanic I[3]	-	0.4	-	-	-	16	-	-
Maintenance Mechanic Helper[3]	-	0.4	-	-	-	16	-	-
Pretreatment Technician	1	-	-	-	20	-	-	-
Total Staff[4]	**9**	**10.9**	**9**	**13**	**263**	**322**	**220**	**520**

NOTES:
1. Recommended number of staff and man hours per week are interpolated from information provided by Water Pollution Control Federation Manual of Practice No. 7 "Operations and Maintenance of Wastewater Collection Systems." Utility Manager referred to as Superintendent, Supervisor referred to as Maintenance Supervisor, Lead referred to as Foreman, Senior Maintenance referred to as Maintenance II and Mason II, and Utility Worker referred to as Maintenance I and Mason I in Water Pollution Control Federation Manual of Practice No. 7 "Operations and Maintenance of Wastewater Collection Systems."
2. Multiply number of lift stations maintained by 2.67 to approximate number of man hours per week recommended. The City has six lift stations that it maintains.
3. Multiply number of lift station visits per week by 2.67 to approximate number of man hours per week recommended. The City has six lift stations that it visits each week for maintenance.
4. Some staff, such as clerks and construction inspectors, have been omitted from this list due to support the Wastewater Division receives from other divisions and departments.

Based on the suggested staffing requirements in **Table 8-4**, approximately 8 full-time staff equivalents (approximately 322 man hours) are recommended to operate and maintain the City's sewer system. However, the City's current staff of approximately 6.6 full-time staff equivalents (approximately 263 man hours, excluding Public Works Director) is not quite sufficient to provide the optimum level of service. At the current staffing level, the City is capable of adequately operating the sewer system and complying with the minimum requirements of the Washington State Department of Ecology. Approximately one and a half (1.5) additional full-time staff equivalents (approximately 58 man hours) would achieve optimum operation and maintenance of the sewer system. The City will add staff in the future, as necessary and as allowed by the budget, to meet the increasing requirements of system O&M due to customer growth and increased regulatory requirements.

THIS PAGE INTENTIONALLY LEFT BLANK

Financial Plan

9

INTRODUCTION

The purpose of the financial plan is to provide reasonable assurance that the City of Kirkland (City) has and will have the financial ability to maintain and operate the utility on an ongoing basis and has the capacity to obtain sufficient funds to construct the sewer system improvements as identified in **Chapter 7**.

The financial plan can only provide this qualified assurance if it considers the "total system" costs of providing sewer service – both operating and capital. To meet these objectives, the financial plan includes the following elements.

- **Past Financial Performance**
  - *Comparative Statement of Revenues, Expenses and Changes in Fund Net Position 2010-2015*
  - *Comparative Statement of Net Position 2010-2015*
  - *Debt Service Schedules*
- **Funding Sources**
- **Capital Financing Plan**
  - *6-Year Capital Improvement Plan (CIP) with revenue sources 2016-2021*
  - *Total Sewer System Projects 2016-2035*
- **Projected Financial Performance**
  - *Revenue Requirement Forecast 2016-2021*
- **Current Rate Structures and Conservation Objectives**

PAST FINANCIAL PERFORMANCE

The City's primary function is to provide necessary inspections, repairs and maintenance to ensure the proper collection and conveyance of wastewater to treatment facilities at the lowest reasonable price.

The historical financial statements presented in the next section clearly show the financial viability and strength of the City to continue providing a high level of service. The sewer system is part of a combined water/sewer fund, so the financial statements reflect the combined utility results.

Comparative Financial Statements

Table 9-1 shows a consolidated statement of revenues and expenses and changes in fund net position from 2010 through 2015. Key points regarding the statement are discussed following the table.

Table 9-1
Statement of Revenues, Expenses, and Changes in Fund Net Position

	2010	2011	2012	2013	2014	2015
Operating Revenues						
Total Sewer Revenue	**$9,298,339**	**$10,441,242**	**$10,923,599**	**$12,799,113**	**$13,011,728**	**$13,785,763**
Total Water Revenue	**$8,914,061**	**$8,939,704**	**$9,773,109**	**$11,934,452**	**$12,787,232**	**$13,665,757**
Miscellaneous Revenue	174,662	355,260	369,683	357,540	346,843	345,447
TOTAL OPERATING REVENUE	**$18,387,062**	**$19,736,206**	**$21,066,391**	**$25,091,105**	**$26,145,803**	**$27,796,967**
Operating Expenses						
Source of Supply/Sewer Treatment	$9,234,945	$10,456,514	$10,420,583	$11,475,452	$11,502,844	$12,255,213
Regional Water Connection Pass Through	246,205	303,253	564,471	731,931	857,168	996,830
Other Operating	887,643	781,380	1,011,423	977,930	1,016,592	1,026,916
Maintenance	1,121,380	1,162,647	1,231,668	1,300,422	1,370,310	1,325,973
Customer Accounts	545,794	563,072	775,527	648,351	667,907	756,699
Administration Costs	2,010,772	2,203,650	2,301,127	2,258,874	2,135,718	2,347,212
Taxes	532,590	817,454	636,159	3,786,806	3,430,964	3,611,932
Depreciation	2,328,940	2,378,109	2,419,489	2,462,774	2,535,487	2,642,280
TOTAL OPERATING EXPENSES	**$16,908,269**	**$18,666,079**	**$19,360,447**	**$23,642,540**	**$23,516,990**	**$24,963,055**
OPERATING INCOME	**$1,478,793**	**$1,070,127**	**$1,705,944**	**$1,448,565**	**$2,628,813**	**$2,833,912**
Non-Operating Revenues (Expenses)						
Interest and Investment Income	$207,848	$179,206	$141,654	$45,323	$230,419	$202,100
Interest Expense	(142,694)	(107,227)	(67,793)	(38,416)	(16,597)	(7,308)
Grant Income		112,832	5,909			
Gain (Loss) on Disposal of Assests				(722)	(31)	(11,124)
Amortization of Debt Issue Costs	(51,216)	(47,640)	(19,980)			
TOTAL NON-OPERATING REVENUES (EXPENSES)	**$13,938**	**$137,171**	**$59,790**	**$6,185**	**$213,791**	**$183,668**
INCOME BEFORE CONTRIBUTIONS AND TRANSFERS	**$1,492,731**	**$1,207,298**	**$1,765,734**	**$1,454,750**	**$2,842,604**	**$3,017,580**
Operating Transfer In						
Operating Transfer Out	($115,466)	(143,000)	(100,000)	(190,000)	(135,400)	(233,505)
Capital Contributions						
Sewer Capital Facilities Charges	212,614	200,756	502,118	302,017	884,385	860,927
Other Contributions	1,416,812	732,466	1,220,158	1,698,825	3,033,675	2,159,904
INCREASE IN NET POSITION	**$3,006,691**	**$1,997,520**	**$3,388,010**	**$3,265,592**	**$6,625,264**	**$5,804,906**
Net Position						
Net Position -- Beginning of Year	$100,862,974	$103,869,665	$105,867,185	$109,255,195	$112,520,787	$119,146,051
Change in Accounting Principle GASB 68						(837,996)
NET POSITION -- END OF YEAR	**$103,869,665**	**$105,867,185**	**$109,255,195**	**$112,520,787**	**$119,146,051**	**$124,112,961**

Note: Inputs were obtained from the City's annual financial statements.

- Sewer service revenues grew from 2010 through 2015 primarily as a result of rate increases. Water service revenues are not considered available to the sewer utility; therefore, the service revenues are separated for the two utilities. The remaining comments on historical financial information are related to the utilities' combined financial performance.
- Operating income before depreciation and amortization ranged between 17 percent and 21 percent of total operating revenue until 2013 when it dropped to 15.6 percent returning to 19.8 percent in 2014. Overall, this is an indicator of excellent cash flow from operations.
- The City's net income before capital contributions as a percent of total revenue ranged from approximately 6 percent to 11 percent.

- **Table 9-2** shows the statement of net position from 2010 through 2015. Key points regarding the statement for the combined water/sewer utility are discussed following the table.

Table 9-2
Statement of Net Position

	2010	2011	2012	2013	2014	2015
ASSETS						
Current Assets						
Cash and Cash Equivalents	$ 9,653,247	$ 13,441,294	$ 10,238,478	$ 10,155,971	$ 10,555,783	$ 10,401,472
Investments	5,868,776	5,015,214	10,821,007	14,316,471	17,497,848	17,139,945
Total Cash	**$15,522,023**	**$18,456,508**	**$21,059,485**	**$24,472,442**	**$28,053,631**	**$27,541,417**
Customer Accounts Receivable	$ 3,708,463	$ 4,178,759	$ 4,171,240	$ 4,389,194	$ 4,740,288	$ 4,580,029
Due from Other Funds	7,453	11,221	11,687	17,654	12,298	17,941
Intergovernmental Receivable	66,749	21,798	9,885	11,793	16,338	78,756
Assessments Receivable	10,970	18,567	20,337	21,527	22,452	21,285
Interest Receivable	220,963	180,628	194,036	191,244	200,108	174,099
Contracts Receivable	2,619,229	2,191,477	1,909,307	2,244,730	1,911,420	1,563,450
Restricted Asset - Deposits/Prepayments		11,945			258	
Inventory of Materials	388,813	432,365	373,658	376,745	314,967	313,635
TOTAL CURRENT ASSETS	**$22,544,663**	**$25,503,268**	**$27,749,635**	**$31,725,329**	**$35,271,760**	**$34,290,612**
Restricted Assets						
Water/Sewer Bond Reserve	$822,275	$821,130	$ 488,200	$484,500		
Interfund Loan Receivable						
Loans						$ 4,698,991
Interest						6,488
TOTAL INTERFUND LOAN RECEIVABLE	**$0**	**$0**	**$0**	**$0**	**$0**	**$4,705,479**
Fixed Assets						
Utility Plant	$116,946,959	$120,196,524	$ 121,084,974	$124,525,037	$ 128,162,490	$ 136,093,536
Construction Work in Progress	5,455,806	2,723,742	4,453,102	2,804,143	4,532,302	1,007,059
Less: Accumulated Depreciation	(33,574,252)	(35,952,361)	(38,368,516)	(40,819,976)	(43,353,918)	(45,839,018)
TOTAL FIXED ASSETS	**$88,828,513**	**$86,967,905**	**$87,169,560**	**$86,509,204**	**$89,340,874**	**$91,261,577**
Deferred Charges						
Deferred Charges Related to Bond Refunding	67,621	19,980				
TOTAL ASSETS	**$112,263,072**	**$113,312,283**	**$115,407,395**	**$118,719,033**	**$124,612,634**	**$ 130,257,668**
DEFERRED OUTFLOW PENSION RELATED						**$69,232**

Table 9-2
Statement of Net Position (Continued)

	2010	2011	2012	2013	2014	2015
LIABILITIES						
Current Liabilities						
Accounts Payable	$ 26,228	$ 52,284	$ 99,235	$ 55,987	$ 389,511	$ 480,595
Employee Wages Payable	71,853	67,505	74,742	80,485	79,869	80,364
Employee Benefits Payable	57,470	51,067	68,214	64,202	66,695	66,499
Unearned Revenue	2,625,621	2,217,044	1,936,573	2,273,047	1,911,420	1,589,889
Due to Other Funds	354	1,952	365	461,881	504,201	484,896
Intergovernmental Payable	241,999	808,581	866,242	975,897	921,399	1,088,231
Accrued Interest Payable - PWTF Loans	9,695	8,160	6,625	5,125	3,501	3,156
Current Portion of Public Works Trust Fund Loans	387,178	387,178	387,178	343,843	226,914	192,552
TOTAL CURRENT LIABILITIES	**$3,420,398**	**$3,593,771**	**$3,439,174**	**$4,260,467**	**$4,103,510**	**$3,986,182**
Current Liabilities (Payable from Restricted Assets)						
Deposits Payable			$ 12,710	$ 17,001		
Accrued Interest Payable - W/S Bonds	9,141	6,238	3,117	1,583		
Current Portion of Long Term Debt	730,000	765,000	460,000	475,000		
TOTAL CURRENT LIABILITIES PAYABLE FROM RESTRICTED ASSETS	**$739,141**	**$771,238**	**$475,827**	**$493,584**	**$0**	**$0**
Long-Term Liabilities						
Revenue Bonds (Net of Current Portion)	$ 1,700,000	$ 935,000	$ 475,000			
Public Works Trust Fund Loans (net of current portion)	2,519,500	2,132,322	1,745,145	1,428,145	1,346,399	1,326,572
Net Pension Liability						769,310
Employee Benefits Payable	14,368	12,767	17,054	16,050	16,674	16,625
TOTAL LIABILITIES	**$8,393,407**	**$7,445,098**	**$6,152,200**	**$6,198,246**	**$5,466,583**	**$6,098,689**
DEFERRED INFLOW PENSION RELATED						**$115,250**
Net Position						
Invested in Capital Assets Net of Related Debt	$83,491,835	$82,748,404	$84,102,237	$84,262,216	$87,767,561	$89,742,453
Restricted for Debt Service	822,275	821,130	488,200	484,500		
Unrestricted	19,555,555	22,297,651	24,664,758	27,774,071	31,378,490	34,370,508
TOTAL NET POSITION	**$103,869,665**	**$105,867,185**	**$109,255,195**	**$112,520,787**	**$119,146,051**	**$124,112,961**

Note: Inputs were obtained from the City's annual financial statements.

- The City's current ratio (current assets divided by current liabilities) ranged from 5:1 in 2010 to 9:1 in 2015. A ratio of 2:1 is generally considered very good. The City has healthy liquidity.
- The long-term debt relative to total assets ranged from approximately 4 percent in 2010 to 2 percent in 2015.

Existing Long-term Debt

At the end of 2015 the sewer utility had four Public Works Trust Fund (PWTF) loans. **Table 9-3** shows the schedule of annual debt service payments throughout the term of each debt obligation. The sewer utility is responsible for 100 percent of the 1999, 2001, and 2004 loans. The 2012 Public Works Trust Fund loan is a $4,038,000 loan of which the sewer utility will be responsible for $2,070,400 and the water utility will be responsible for the balance. **Table 9-3** reflects debt service for the sewer utility's portion. Although final draws for the 2012 loan will not be received until 2017, debt service payments for the 2012 loan in **Table 9-3** reflect what debt service will be after all draws have been received. **Table 9-2** reflects the draws that have been received through December 31, 2015.

Table 9-3
Schedule of Long-term Debt (Sewer Share)

Year	2012 PWTF Loan $2,070,400 NE 80th Street Sewermain Replacement			2004 PWTF Loan $1,086,300 Central Way Sewer Replacement		
	Principal	Interest	Total	Principal	Interest	Total
2016	$9,410	$680	$10,090	$57,332	$2,580	$59,912
2017	$96,873	$3,141	$100,014	$57,333	$2,293	$59,626
2018	$130,423	$7,265	$137,688	$57,333	$2,006	$59,339
2019	$130,423	$9,130	$139,553	$57,332	$1,720	$59,052
2020	$130,423	$8,477	$138,900	$57,333	$1,433	$58,766
2021	$130,423	$7,825	$138,248	$57,332	$1,147	$58,479
2022	$130,423	$7,173	$137,596	$57,333	$860	$58,193
2023	$130,423	$6,521	$136,944	$57,333	$573	$57,906
2024	$130,423	$5,869	$136,292	$57,332	$287	$57,619
2025	$130,423	$5,217	$135,640			
2026	$130,423	$4,565	$134,988	**$515,993**	**$12,899**	**$528,892**
2027	$130,423	$3,913	$134,336			
2028	$130,423	$3,261	$133,684			
2029	$130,423	$2,608	$133,031			
2030	$130,423	$1,956	$132,379			
2031	$130,423	$1,304	$131,727			
2032	$130,423	$652	$131,075			
Totals	**$2,062,628**	**$79,557**	**$2,142,185**			

Year	2001 PWTF Loan $1,848,000 Juanita Lift Station Construction			1999 PWTF Loan $227,500 Juanita Lift Station Design		
	Principal	Interest	Total	Principal	Interest	Total
2016	$102,969	$3,089	$106,058	$12,535	$501	$13,036
2017	$102,969	$2,574	$105,543	$12,535	$376	$12,911
2018	$102,969	$2,059	$105,028	$12,535	$251	$12,786
2019	$102,968	$1,545	$104,513	$12,535	$125	$12,660
2020	$102,968	$1,030	$103,998			
2021	$102,968	$515	$103,483			
Totals	**$617,811**	**$10,812**	**$628,623**	**$50,140**	**$1,253**	**$51,393**

FUNDING SOURCES

The City may fund the sewer capital improvement program from a variety of sources. In general, these sources can be summarized as: 1) governmental grant and loan programs; 2) publicly issued debt (tax-exempt or taxable); 3) cash resources; and 4) connection fees (Capital Facilities Charges). Each source is described below.

Government Programs

Historically, federal and state grant programs were available to local utilities for capital funding assistance. However, these assistance programs have been mostly eliminated, substantially reduced in scope and amount, or replaced by loan programs. Remaining grant programs are generally underfunded and extremely competitive. Nonetheless, the benefit of even the very low-interest loans makes the effort of applying worthwhile. State programs identified as potential funding sources for the utility improvements set forth in this General Sewer Plan (GSP) are discussed next.

Public Works Trust Fund – The Public Works Trust Fund (PWTF) is a commonly used, low-cost revolving-loan fund established by the 1985 State Legislature to provide financial assistance to local governments for public works projects. Eligible projects must improve public health and safety, respond to environmental issues, promote economic development or upgrade system performance. Currently there are no loans available in this program.

Community Economic Revitalization Board – Managed by the Department of Commerce, this program provides grants and loans to fund public facilities that support specific private-sector business growth and expansion. Eligible projects include water, sewer, and other public improvements.

Department of Ecology – The Department of Ecology's Water Quality Financial Assistance Program sponsors one grant or loan program that could apply to the City's wastewater system: the State Revolving Fund Loan program. While some of these funding sources go to wastewater programs, projects such as the development and implementation of groundwater, and wellhead protection programs, are also included.

Public Debt

Revenue Bonds – Revenue bonds are commonly used to fund utility capital improvements. The debt is secured by the revenues of the issuing utility, and the debt obligation does not extend to the City's other revenue sources. With this limited commitment, revenue bonds typically require security conditions related to the maintenance of dedicated reserves (a bond reserve) and financial performance (added bond debt service coverage). The City agrees to satisfy these requirements by ordinance as a condition of the bond sale.

Revenue bonds can be issued in Washington without a public vote. There is no bonding limit, except perhaps the practical limit of the utility's ability to generate sufficient revenue to repay the debt and provide coverage. In some cases, poor credit might make issuing bonds problematic. In the case of the City, strong historical financial performance bodes well for this form of financing. For the most part, tax-exempt bonds may be issued by a governmental agency for its capital projects, with the exception of funding needs that serve private sector or non-governmental interests such as mutual water companies and homeowner's associations (which are classified as 501c corporations). Generally speaking, if more than 10 percent of a capital project provides direct benefit and service to the private sector (e.g., a business or mutual water company receiving wholesale water), the associated revenue bonds will likely be taxable. It is important that each agency perform due diligence in this regard where there is a question of private versus public benefit.

City Cash Reserves

The City has combined water and sewer reserves that include a Working Capital Reserve, an Operating Capital Reserve, and a Capital Contingency Reserve. The rate revenue needs analysis for sewer must consider reserves available to the sewer utility. Allocation of the reserve balances as of year-end 2015 were made to water and sewer separately based on rate revenue for the Working Capital and Operating Capital reserves and CIP spending for the Capital Contingency Reserves. **Table 9-4** shows a summary of the projected balances through 2021. The table anticipates the need for revenue bonds in 2020. This will be evaluated as capital projects change or other funding sources become available, such as low interest rate loans.

Table 9-4
Cash Balance Summary for Sewer Utility

As of December 31:	2016	2017	2018	2019	2020	2021
Working Capital Reserve	1,525,233	1,525,233	1,525,233	1,525,233	1,525,233	1,525,233
Operating Capital Reserve	2,347,137	2,347,137	2,347,137	1,479,137	1,479,137	1,479,137
Capital Contingency Reserve	6,497,841	4,260,004	5,541,754	4,598,791	3,429,162	3,389,248
Debt Reserve					25,969	221,955
TOTAL ENDING CASH BALANCES	**$10,370,211**	**$8,132,374**	**$9,414,124**	**$7,603,161**	**$6,459,501**	**$6,615,573**

** Ending 2015 balances were allocated to water and sewer and projected forward.*

Capital Facilities Charges

Capital Facilities Charges (CFCs) are legal sources of funding provided through development and growth in customers, typically used by utilities to support capital needs. CFCs are a form of connection charges as authorized in the RCW 35.92.025. CFCs are imposed on new customers as a condition of service. Typically, the basis for the CFC is the total original capital cost the utility will or has incurred to provide the sewer system. The underlying premise of the CFC is that growth (i.e., future customers) will pay upfront for growth-related costs that would not have been necessary absent the increase in customer base.

The purpose of the CFC is two-fold: 1) to provide funding sources for capital financing; and 2) to recover an equitable level of investment in the system from new customers. In the absence of such a charge, growth-related costs would be borne, in large part, by existing customers. In addition, the current customers' net investment in the utility would be diluted by the addition of new customers absent a CFC. This dilution, if allowed, would in effect be a subsidy to new connections.

A brief description of the components that can be included in the CFC is provided below.

- Existing Cost Basis – Legal interpretations of state statutes have provided guidelines for connection charges (CFCs). CFCs should reflect the actual original cost of the utility system and can include interest on that cost at the rate of interest applicable at the time of construction for up to a 10-year period, not to exceed 100 percent of the construction costs. This cost is net of donated facilities and non-utility cash payments, whether from grants, developers or through Local Improvement District assessments. Although not required by state law, outstanding debt principal (net of existing cash balances) is then subtracted from this cost basis to avoid double-charging, in recognition that debt service is repaid through rates.

- Future Cost Basis – Legal interpretations also suggest that future facilities needed to serve growth, as well as regulatory system improvements can be included in the connection charge. The future cost basis can include utility capital projects planned for construction and identified in an approved comprehensive system planning document. Projects directly funded by developers, grants or special property assessments are not included in the calculation. Replacement projects are most often excluded from the calculation unless needed to increase the size of the system. The original cost of replacement projects is already included in the existing cost basis. Further, replacement costs are typically recovered through user rates.
- Customer Base/System Capacity – The sum of the existing cost basis and future cost basis is then divided by the total customer base to determine the maximum allowable connection charge. The customer base represents the equivalent residential units (ERUs) that can be supported by the planned system capacity.

The City's current CFC is $3,106 per ERU. **Table 9-5** summarizes the CFC analysis using future projects identified in **Chapter 7**. ERUs for this calculation are based on what is reported to King County Wastewater Treatment Division for billing purposes, which is different than how ERUs are calculated in **Chapter 4**. In addition to the annual growth rate used in the 2015 sewer rate study of 0.85 percent, future ERUs include an estimate of septic system conversions based on historical data, resulting in an annual growth rate of 1.03 percent. Our study results indicate that the current CFC is sufficient, and no change is recommended.

Table 9-5
Capital Facilities Charges

			Notes
EXISTING COST BASIS			**Notes**
Plant-in-Service			
Utility Capital Assets		$ 64,958,533	Original cost of plant-in-service as of 2015
less: Contributed Capital		(35,522,506)	CIAC, Grants, and other contributed capital
plus: Interest on Non-Contributed Plant		12,872,141	Interest on assets up to a maximum 10-year period
Existing Cash Balances	$ 10,244,060		Beginning cash balances for year 2015
less: Debt Principal Outstanding	(3,246,573)		Total principal outstanding for the existing debt
less: Net Debt Principal Outstanding		$ -	Debt principal outstanding, net of cash reserves
Total Existing Cost Basis		**$ 42,308,168**	
FUTURE COST BASIS			
Capital Improvement Plan			
Total Future Projects		$ 154,163,281	Total 20-year Sewer General Plan
less: Identified Repair & Replacement Projects		(137,585,522)	R&R projects are not eligible for CFC
less: Contributed Future Upgrade & Expansion Assets			Not eligible for recovery through CFC
Total Future Cost Basis		**$ 16,577,759**	
CUSTOMER BASE			
Existing Equivalent Residential Units		15,469	2015 Equivalent Residential Units
Future Equivalent Residential Units (Incremental)		3,533	Projected incremental CIP Capacity
Total Customer Base		**19,002**	Projected CIP Capacity 2035
RESULTING CHARGE			
Total Cost Basis		$ 58,885,927	
Total Customer Base		19,002	
TOTAL CHARGE PER ERU [a]		**$ 3,099**	
Existing Water Capital Facilities Charge		$ 3,106	

[a] Increases with meter size

CAPITAL FINANCING PLAN

Existing capital reserves (funded in part by system replacement contributions from rates), annual interest earnings, CFC collections, and the potential issue of revenue bonds during the 6-year period are anticipated to fund projected costs. **Table 9-6** shows the annual funding sources for the 6-year forecast period.

Table 9-6
6-Year Capital Financing Plan 2016-2021 (Inflated $)

CAPITAL IMPROVEMENT PROGRAM	2016	2017	2018	2019	2020	2021
Replacement Projects	$ 1,650,550	$ 4,972,180	$ 1,537,520	$ 4,444,140	$ 4,156,710	$ 5,285,720
Upgrade/Expansion Projects	1,181,750	204,220	277,780	805,360	1,017,090	1,193,880
Total Capital Projects	**$ 2,832,300**	**$ 5,176,400**	**$ 1,815,300**	**$ 5,249,500**	**$ 5,173,800**	**$ 6,479,600**

CAPITAL FINANCING PLAN	2016	2017	2018	2019	2020	2021
Funding Sources						
Capital Reserves	$ 2,832,300	$ 5,176,400	$ 1,815,300	$ 5,249,500	$ 4,832,717	$ 3,905,497
Revenue Bonds	-	-	-	-	341,083	2,574,103
Total Funding Sources	**$ 2,832,300**	**$ 5,176,400**	**$ 1,815,300**	**$ 5,249,500**	**$ 5,173,800**	**$ 6,479,600**

The 20-year proposed improvements identified in the draft of the current GSP total $154.2 million. In both the 6- and 20-year forecasts, capital costs are escalated with a projected construction cost inflation rate (4 percent annually) to the year of planned spending. Funding sources will be evaluated as capital projects change and will be a combination of existing capital reserves (funded in part by system replacement contributions from rates), annual interest earnings, CFC collections, and the potential issue of revenue bonds or low interest rate loans.

PROJECTED FINANCIAL PERFORMANCE

Basis for Revenue Requirements

The revenue requirement analysis determines the amount of rate revenue needed in a given year to meet that year's expected financial obligations.

The cash flow test identifies cash requirements for the utility in the year addressed. Those requirements can include cash operating and maintenance expenses, debt service, directly funded capital outlays, capital transfers and any projected additions to reserves. The total cash needs were then compared to projected utility revenues. Any projected shortfalls were identified, and the level of rate increase necessary to make up the shortfall was estimated.

The City's internal coverage policy is currently 1.50 times all utility debt, meaning that revenues must be sufficient to meet operating expenses plus a factor, set at a minimum of 1.50 times annual debt service on all utility debt (revenue bonds and PWTF loans). The coverage factor adds some protection for bondholders against the risk of poor financial performance in any given fiscal year. The excess cash flow derived from the added coverage can be used for capital costs.

A number of forecast assumptions are used in the analysis.

- Revenue is calculated to increase with growth in future years, which is projected to be about 0.85 percent per year.
- Operation and maintenance expenses are escalated at 3 percent for general cost inflation.
- Capital expenses are escalated at 4 percent per year.
- In addition to maintenance and operations costs, the revenue requirements include capital costs for debt service, directly rate-funded capital projects and rate-funded system reinvestment transfers to CIP funds.
- The City's fund interest earnings rate is assumed to be 0.5 percent.
- The forecast assumes a Public Works Trust Fund loan interest rate of 0.5 percent with a 20-year term.

Table 9-7 summarizes the projected financial performance and rate requirements for 2016 through 2021.

Table 9-7
Revenue Requirement Forecast

REVENUE REQUIREMENTS SUMMARY	2016	2017	2018	2019	2020	2021
Revenues						
Rate Revenues Under Existing Rates - Local	$ 4,777,850	$ 4,818,462	$ 4,859,419	$ 4,900,724	$ 4,942,380	$ 4,984,390
Rate Revenues - King County Treatment	$ 7,795,650	$ 8,271,563	$ 8,341,871	$ 8,852,251	$ 8,927,495	$ 9,235,574
Non-Rate Revenues	146,228	158,643	169,433	170,553	178,023	179,552
Total Revenues	**$ 12,719,728**	**$ 13,248,668**	**$ 13,370,723**	**$ 13,923,528**	**$ 14,047,898**	**$ 14,399,516**
Expenses						
Operating & Maintenance Expenses	$ 2,542,039	$ 2,596,863	$ 2,655,673	$ 2,721,304	$ 2,785,486	$ 2,856,475
King County Treatment Expense	$ 7,795,650	$ 8,271,563	$ 8,341,871	$ 8,852,251	$ 8,927,495	$ 9,235,574
Existing Debt Service	188,510	316,713	315,144	313,576	299,472	298,029
New Debt Service	-	-	-	-	25,969	221,955
Rate-Funded System Reinvestment	1,866,757	2,155,293	2,363,702	2,689,266	2,944,041	3,157,867
Total Expenses	**$ 12,392,956**	**$ 13,340,432**	**$ 13,676,390**	**$ 14,576,397**	**$ 14,982,463**	**$ 15,769,900**
Net Revenue from Rate Increases	**$ -**	**$ 91,764**	**$ 305,667**	**$ 652,869**	**$ 934,564**	**$ 1,370,384**
Net Annual Surplus/(Deficiency)	**$ 326,772**	**$ -**	**$ -**	**$ -**	**$ -**	**$ -**
Annual Rate Adjustment - Local	**0.00%**	**1.90%**	**4.30%**	**6.62%**	**4.93%**	**7.22%**
Cumulative Rate Adjustment - Local	**0.00%**	**1.90%**	**6.29%**	**13.32%**	**18.91%**	**27.49%**
Annual Rate Adjustment - Treatment	**0.00%**	**5.21%**	**0.00%**	**5.22%**	**0.00%**	**2.58%**
Cumulative Rate Adjustment - Treatment	**0.00%**	**5.21%**	**5.21%**	**10.71%**	**10.71%**	**13.56%**
Annual Rate Adjustment - Composite	**0.00%**	**3.95%**	**1.60%**	**5.76%**	**1.90%**	**4.42%**
Cumulative Rate Adjustment - Composite	**0.00%**	**3.95%**	**5.62%**	**11.70%**	**13.82%**	**18.86%**

The revenue needs forecast provides for between 1.6 percent and 5.8 percent rate increases each year through 2021. Rate increases by customer class may be more or less than these percentages. Contributing to these increases are King County Wastewater Treatment Division rate increases for sewer treatment which generally occur every other year. These increases are shown in **Table 9-7**.

RATE STRUCTURE

Existing Retail Rates

The City's existing sewer rates for single-family residential customers are comprised of a fixed monthly charge of $58.12 that includes an allowance for the first 300 cubic feet (3 ccf) of average winter water consumption for the bi-monthly billing period. Usage above 3 ccf is billed at $4.63 per ccf. Multi-family and commercial customers are charged $58.48 monthly, which includes an allowance for the first 600 cubic feet (6 ccf) of water consumption. Usage above 6 ccf is billed at $9.79 per ccf.

CONCLUSION

The City continues to maintain the sewer utility in a healthy financial position and is taking steps with this GSP to ensure future stability of the sewer utility's financial status.

APPENDIX A

King County South WWTP NPDES Permit

THIS PAGE INTENTIONALLY LEFT BLANK

Issuance Date: July 1, 2015
Effective Date: August 1,2015
Expiration Date: July 31, 2020

National Pollutant Discharge Elimination System
Waste Discharge Permit No. WA0029581

State of Washington
DEPARTMENT OF ECOLOGY
Northwest Regional Office
3190 160th Avenue SE
Bellevue, WA 98008-5452

In compliance with the provisions of
The State of Washington Water Pollution Control Law
Chapter 90.48 Revised Code of Washington
and
The Federal Water Pollution Control Act
(The Clean Water Act)
Title 33 United States Code, Section 1342 et seq.

King County Wastewater Treatment Division
King Street Center, KSC-NR-0512
Seattle, Washington 98104-3855

is authorized to discharge in accordance with the Special and General Conditions that follow.

Plant Location:	**Receiving Water:**
King County South Wastewater Treatment Plant 1200 Monster Road SW Renton, WA 98057	Puget Sound – Central
Treatment Type: Activated Sludge with chlorine disinfection	

Kevin C. Fitzpatrick
Water Quality Section Manager
Northwest Regional Office
Washington State Department of Ecology

Table of Contents

Table of Contents *2*

Summary of Permit Report Submittals *4*

Special Conditions *5*

S1. Discharge limits **5**
- S1.A. Effluent limits 5
- S1.B. Mixing zone authorization 7

S2. Monitoring requirements **8**
- S2.A. Monitoring schedules 8
- S2.B. Sampling and analytical procedures 10
- S2.C. Flow measurement and continuous monitoring devices 10
- S2.D. Laboratory accreditation 11

S3. Reporting and recording requirements **11**
- S3.A. Discharge monitoring reports 11
- S3.B. Permit submittals and schedules 12
- S3.C. Records retention 13
- S3.D. Recording of results 13
- S3.E. Additional monitoring by the Permittee 13
- S3.F. Reporting permit violations 13
- S3.G. Other reporting 15
- S3.H. Maintaining a copy of this permit 15

S4. Facility loading **16**
- S4.A. Design criteria 16
- S4.B. Plans for maintaining adequate capacity 16
- S4.C. Duty to mitigate 16
- S4.D. Notification of new or altered sources 17
- S4.E. Wasteload assessment 17

S5. Operation and maintenance **18**
- S5.A. Certified operator 18
- S5.B. Operation and maintenance program 18
- S5.C. Short-term reduction 18
- S5.D. Electrical power failure 19
- S5.E. Prevent connection of inflow 19
- S5.F. Bypass procedures 19
- S5.G. Operations and maintenance (O&M) manuals 21

S6. Pretreatment **22**
- S6.A. General requirements 22
- S6.B. Monitoring requirements 25
- S6.C. Reporting of monitoring results 26
- S6.D. Local limit development 26

S7. Solid wastes **27**
- S7.A. Solid waste handling 27
- S7.B. Leachate 27

S8. Spill control plan **27**
- S8.A Spill control plan submittals and requirements 27

S8.B. Spill control plan components 27
S9. Sediment monitoring 28
S9.A. Sediment sampling and analysis plan 28
S9.B. Sediment data report 28
S10. Acute toxicity 29
S10.A. Testing when there is no permit limit for acute toxicity 29
S10.B. Sampling and reporting requirements 29
S11. Chronic toxicity 30
S11.A. Testing when there is no permit limit for chronic toxicity 30
S11.B. Sampling and reporting requirements 30
S12. Use of effluent from effluent transfer system 31
S13. Application for permit renewal or modification for facility changes 32
General Conditions 33
G1. Signatory requirements 33
G2. Right of inspection and entry 34
G3. Permit actions 34
G4. Reporting planned changes 35
G5. Plan review required 36
G6. Compliance with other laws and statutes 36
G7. Transfer of this permit 36
G8. Reduced production for compliance 37
G9. Removed substances 37
G10. Duty to provide information 37
G11. Other requirements of 40 CFR 37
G12. Additional monitoring 37
G13. Payment of fees 37
G14. Penalties for violating permit conditions 37
G15. Upset 38
G16. Property rights 38
G17. Duty to comply 38
G18. Toxic pollutants 38
G19. Penalties for tampering 38
G20. Compliance schedules 39
G21. Service agreement review 39
Appendix A 40

Summary of Permit Report Submittals

Refer to the Special and General Conditions of this permit for additional submittal requirements.

Permit Section	Submittal	Frequency	First Submittal Date
S3.A	Discharge Monitoring Report (DMR)	Monthly	September 15, 2015
S3.A	Permit application and priority pollutant data in WQWebDMR	Annually	July 31, 2016
S3.F	Reporting Permit Violations	As necessary	
S4.B	Plans for Maintaining Adequate Capacity	As necessary	
S4.D	Notification of New or Altered Sources	As necessary	
S4.E	Wasteload Assessment	1/permit cycle	October 31, 2018
S5.F	Bypass Notification	As necessary	
S5.G	Operations and Maintenance Manual Update	As necessary	
S6.A.4	Pretreatment Report	1/year	April 30, 2016
S8	Spill Control Plan Update	As necessary	
S9.A	Sediment Sampling and Analysis Plan	1/permit cycle	December 1, 2016
S9.B	Sediment Data Report	1/permit cycle	December 1, 2018
S10.A	Acute Toxicity Effluent Test Results - Submit with Permit Renewal Application	2 tests/permit cycle, 1 submittal/permit cycle	Tests: 2018, 1st and 3rd quarters. Submittal: July 31, 2019
S11.A	Chronic Toxicity Effluent Test Results with Permit Renewal Application	2 tests/permit cycle, 1 submittal/permit cycle	Tests: 2018, 2nd and 4th quarters. Submittal: July 31, 2019
S13	Application for Permit Renewal	1/permit cycle	July 31, 2019
G4	Reporting Planned Changes	As necessary	
G5	Engineering Report for Construction or Modification Activities	As necessary	

Special Conditions

S1. Discharge limits

S1.A. Effluent limits

Puget Sound (Marine) Outfall No. 001

All discharges and activities authorized by this permit must comply with the terms and conditions of this permit. The discharge of any of the following pollutants more frequently than, or at a level in excess of, that identified and authorized by this permit violates the terms and conditions of this permit.

Beginning on the effective date of this permit, the Permittee may discharge treated municipal wastewater to the Puget Sound at the permitted locations subject to compliance with the following limits:

Effluent Limits: Outfall 001 (Puget Sound) *North Diffuser Lat/Long:* 47.602778˚, -122.429000˚ *South Diffuser Lat/Long:* 47.599722˚, -122.429028˚		
Parameter	**Average Monthly [a]**	**Average Weekly [b]**
Carbonaceous Biochemical Oxygen Demand (5-day) ($CBOD_5$)	25 milligrams/liter (mg/L) 30,000 pounds/day (lbs/day) 85% removal of influent $CBOD_5$	40 mg/L 48,000 lbs/day
Total Suspended Solids (TSS)	30 mg/L 36,000 lbs/day 85% removal of influent TSS	45 mg/L 54,000 lbs/day
	Average Monthly	**Maximum Daily [c]**
Total Residual Chlorine	500 µg/L	750 µg/L
	Instantaneous Minimum	**Instantaneous Maximum**
pH [d]	6.0 standard units	9.0 standard units
	Monthly Geometric Mean	**Weekly Geometric Mean**
Fecal Coliform Bacteria [e]	200/100 milliliter (mL)	400/100 mL

[a] Average monthly effluent limit is the highest allowable average of daily discharges over a calendar month, calculated as the sum of all daily discharges measured during a calendar month divided by the number of daily discharges measured during that month.

[b] Average weekly discharge limit is the highest allowable average of daily discharges over a calendar week, calculated as the sum of all daily discharges measured during a calendar week divided by the number of daily discharges measured during that week.

[c] Maximum daily effluent limit is the highest allowable daily discharge. The daily discharge is the average discharge of a pollutant measured during a calendar day. This does not apply to pH.

[d] Report the instantaneous maximum and minimum pH monthly. Do not average pH values.

[e] Ecology provides directions to calculate the monthly and the weekly geometric mean in publication No. 04-10-020, *Information Manual for Treatment Plant Operators* available at: http://www.ecy.wa.gov/pubs/0410020.pdf

Green River (Freshwater) - Outfall No. 002

Beginning on the effective date of this permit and lasting through the expiration date, the Permittee is authorized to discharge treated municipal wastewater at the Green River outfall for maintenance purposes only under the following conditions:

1. The Permittee must obtain approval from Ecology at least five (5) working days in advance of the discharging to the Green River for maintenance purposes.
2. The duration of the discharge must not exceed four (4) hours.
3. The discharge must comply with the limits specified below.

Effluent Limits: Outfall 002A (Green River) *Lat/Long:* 47.467500˚, -122.244167˚	
Parameter	**Maximum Daily [1]**
Effluent Flow, MGD [2]	Must be less than or equal to: 0.25 * Green River Flow (MGD) / 5
$CBOD_5$	20 mg/L
Total Suspended Solids	20 mg/L
Total Residual Chlorine	95 µg/L
pH	Shall not be outside the range 6.0 to 9.0
	Maximum Geometric Mean
Fecal Coliform	200/100 mL

[1] Maximum daily effluent limit is the highest allowable daily discharge. In this case, the daily discharge is the average measurement over the discharge duration.

[2] Effluent flow limit is based on a dilution factor of 5, which is required to assure compliance with water quality criteria.

4. The Permittee may only discharge when the Green River flow is greater than 500 cfs.
5. The Permittee must treat any maintenance discharges to the Green River using secondary treatment, disinfection, and dechlorination.
6. The Permittee must monitor the discharge as required in S2.A to ensure that effluent limits are met.
7. The Permittee must sample receiving water turbidity as detailed in S2.A.
8. Any discharge from the treatment plant that results in water quality violations or contributes significantly to a fish kill is a violation of this permit.
9. The Permittee may only discharge, as a result of maintenance activities, during the out-going tide (after a high tide and before the subsequent low tide).
10. The Permittee should consider fish migration patterns when scheduling maintenance discharges.

S1.B. Mixing zone authorization

Outfall 001 – Puget Sound (marine)

The following paragraphs define the maximum boundaries of the mixing zones:

Chronic mixing zone

The chronic mixing zone consists of circles surrounding each discharge port with radii of 825 feet measured from the center of each port. The mixing zone extends from the bottom to the top of the water column. The concentration of pollutants at the edge of the chronic zone must meet chronic aquatic life criteria and human health criteria.

Acute mixing zone

The extended acute mixing zone consists of circles surrounding each discharge port with radii of 82 feet measured from the center of each port. The mixing zone extends from the bottom to the top of the water column. The concentration of pollutants at the edge of the acute zone must meet acute aquatic life criteria.

Outfall 001 - Available Dilution (dilution factor)	
Acute Aquatic Life Criteria	186
Chronic Aquatic Life Criteria	225
Human Health Criteria - Carcinogen	428
Human Health Criteria - Non-carcinogen	428

Outfall 002 – Green River (freshwater)

The Green River outfall is used as an emergency/backup outfall and is permitted for maintenance purposes only; emergency discharges from this outfall are permitted under S5.F. No chronic mixing zone is granted because maintenance discharges are permitted for durations of 4 hours or less.

Acute mixing zone

The acute mixing zone encompasses 25% of the river flow in accordance with WAC 173-201A-400(12). The resulting dilution factor is 5.0. The mixing zone extends 100 feet upstream, 300 feet downstream, and from the bottom to the top of the water column. The concentration of pollutants at the edge of the acute zone must meet acute aquatic life criteria.

Outfall 002 - Available Dilution (dilution factor)	
Chronic Dilution Ratio*	Not Applicable
Acute Dilution Ratio	5.0:1

* Maintenance discharges are permitted for durations of 4 hours or less and therefore a chronic dilution factor is not applicable.

S2. Monitoring requirements

S2.A. Monitoring schedules

The Permittee must monitor in accordance with the following schedules and must use the laboratory method, detection level (DL), and quantitation level (QL) specified in Appendix A or corresponding Sampling Analysis Plan/Quality Assurance Project Plan (SAP/QAPP) documents. Alternative methods from 40 CFR Part 136 are acceptable for those parameters without limits, and if the DL and QL are equivalent to those specified in Appendix A, corresponding SAP/QAPP documents, or sufficient to produce a measurable quantity.

Monitoring Requirements for Outfall 001 – Puget Sound

Parameter	Units	Minimum Sampling Frequency	Sample Type
(1) Wastewater influent (raw sewage from the collection system into the treatment facility)			
BOD_5	mg/L	1/week	24-hour composite [a]
	lbs/day [b]	1/week	Calculation
$CBOD_5$	mg/L	4/week	24-hour composite
	lbs/day [b]	4/week	Calculation
TSS	mg/L	4/week	24-hour composite
	lbs/day [b]	4/week	Calculation
(2) Final wastewater effluent (wastewater exiting the last treatment process or operation)			
Flow	MGD	Continuous [c]	Metered/recorded
$CBOD_5$ [d]	mg/L	4/week	24-hour composite
	lbs/day [b]	4/week	Calculation
	% removal [e]	Monthly	Calculation
TSS	mg/L	4/week	24-hour composite
	lbs/day [b]	4/week	Calculation
	% removal [e]	Monthly	Calculation
Chlorine (Total Residual)	µg/L	Continuous	Metered/recorded
Fecal Coliform [f]	# /100 ml	5/week	Grab [g]
pH [h]	Standard Units	Continuous	Metered/recorded
Total Ammonia	mg/L as N	Monthly	24-hour composite
	lbs/day [b]	Monthly	Calculation
Nitrate plus Nitrite Nitrogen	mg/L as N	Monthly	24-hour composite
Total Kjeldahl Nitrogen (TKN)	mg/L as N	Monthly	24-hour composite
Total Phosphorus	mg/L as P	Monthly	24-hour composite
Soluble Reactive Phosphorus	mg/L as P	Monthly	24-hour composite
Cyanide	micrograms/liter (µg/L)	2/year: Aug & Jan	Grab

Parameter	Units	Minimum Sampling Frequency	Sample Type
Total Phenolic Compounds	µg/L	2/year: Aug & Jan	Grab
Priority Pollutants (PP) – Total Metals [i]	µg/L ng/L for mercury	2/year: Aug & Jan	24-hour composite Grab for mercury
PP – Volatile Organic Compounds [i]	µg/L	2/year: Aug & Jan	Grab
PP – Acid-extractable Compounds [i]	µg/L	2/year: Aug & Jan	24-hour composite
PP – Base-neutral Compounds [i]	µg/L	2/year: Aug & Jan	24-hour composite
PP – PCBs [i]	µg/L	2/year: Aug & Jan	24-hour composite
(3) Whole effluent toxicity testing – As specified in Permit Conditions S10 & S11			
Acute Toxicity Testing		2/permit cycle	24-hour composite
Chronic Toxicity Testing		2/permit cycle	24-hour composite
(4) Pretreatment - As specified in Permit Condition S6			
(5) Permit Application Requirements – Final Wastewater Effluent			
Dissolved Oxygen	mg/L	1/year in Aug	Grab
Oil and Grease (HEM)	mg/L	1/year in Aug	Grab
Total Dissolved Solids	mg/L	1/year in Aug	24-hour composite
Total Hardness	mg/L	1/year in Aug	24-hour composite
Alkalinity	mg/L as CaCO3	1/year in Aug	Grab
Temperature	˚C	1/year in Aug	Grab
(6) Sediment - As specified in Permit Condition S9			

[a] 24-hour composite means a series of individual samples collected over a 24-hour period into a single container, and analyzed as one sample.

[b] lbs/day = Concentration (in mg/L) x Flow (in MGD) x Conversion Factor (8.34). Calculate using the average flow measured during the sample collection period.

[c] "Continuous" means uninterrupted except for brief lengths of time for calibration, power failure, or unanticipated equipment repair or maintenance. The time interval for the associated data logger must be no greater than 30 minutes. The Permittee must sample every six hours when continuous monitoring is not possible.

[d] Effluent samples for $CBOD_5$ analysis may be taken before or after the disinfection process. If taken after, dechlorinate and reseed the sample.

[e] % removal = $\frac{\text{Influent monthly average conc. (mg/L)} - \text{Effluent monthly average conc. (mg/L)}}{\text{Influent monthly average concentration (mg/L)}} \times 100$

[f] Report a numerical value for fecal coliforms following the procedures in Ecology's *Information Manual for Wastewater Treatment Plant Operators*, Publication Number 04-10-020 available at: http://www.ecy.wa.gov/programs/wq/permits/guidance.html. Do not report a result as too numerous to count (TNTC).

[g] Grab means an individual sample collected over a fifteen (15) minute, or less, period.

[h] Report the instantaneous maximum and minimum pH daily. Do not average pH values.

[i] Record and report the effluent flow discharged on the day of the priority pollutant samples.

See Appendix A or corresponding SAP/QAPP for the required detection (DL) or quantitation (QL) levels.

Report single analytical values below detection as "less than (detection level)" where (detection level) is the numeric value specified in Appendix A.

Report single analytical values between the detection and quantitation levels with qualifier code of 'j' following the value. If unable to obtain the required DL and QL due to matrix effects, the Permittee must submit a matrix specific MDL and a QL with appropriate laboratory documentation.

Monitoring Requirements for Outfall 002A – Green River

Parameter	Units	Minimum Sampling Frequency	Sample Type
(1) Wastewater Final Effluent (wastewater exiting the last treatment process or operation)			
Effluent Flow - maximum	MGD	Continuous	Metered/recorded
Duration	Hours	Once per event	Measurement
$CBOD_5$	mg/L	Once per event	Composite of equal volume grab samples during event
TSS	mg/L	Once per event	Composite of equal volume grab samples during event
pH	s.u.	Continuous	Metered/recorded
Fecal Coliform	# /100 ml	Once per event	Grab
Total Residual Chlorine	µg/L	Continuous	Metered/recorded
Dilution Factor *	None	Once per event	Calculated
(2) Downstream of Discharge - 300 feet			
River Flow	cfs	Once per event	Measurement
Turbidity	NTU	Once per event	Grab
(3) Upstream of Discharge			
Turbidity	NTU	Once per event	Grab

* Dilution Factor = [0.25 * River Flow, MGD] / [Effluent Flow, MGD], report as comment on DMR

S2.B. Sampling and analytical procedures

Samples and measurements taken to meet the requirements of this permit must represent the volume and nature of the monitored parameters. The Permittee must conduct representative sampling of any unusual discharge or discharge condition, including bypasses, upsets, and maintenance-related conditions that may affect effluent quality.

Sampling and analytical methods used to meet the monitoring requirements specified in this permit must conform to the latest revision of the *Guidelines Establishing Test Procedures for the Analysis of Pollutants* contained in 40 CFR Part 136 (or as applicable in 40 CFR subchapters N [Parts 400–471] or O [Parts 501-503]) unless otherwise specified in this permit . Ecology may only specify alternative methods for parameters without permit limits and for those parameters without an EPA approved test method in 40 CFR Part 136.

S2.C. Flow measurement and continuous monitoring devices

The Permittee must:

1. Select and use appropriate flow measurement and continuous monitoring devices and methods consistent with accepted scientific practices.

2. Install, calibrate, and maintain these devices to ensure the accuracy of the measurements is consistent with the accepted industry standard, the manufacturer's recommendation, and approved O&M manual procedures for the device and the wastestream.
3. Calibrate continuous monitoring instruments consistent with the manufacturer's recommendation.
4. Maintain calibration records for at least three years.

S2.D. Laboratory accreditation

The Permittee must ensure that all monitoring data required by Ecology for permit specified parameters is prepared by a laboratory registered or accredited under the provisions of chapter 173-50 WAC, *Accreditation of Environmental Laboratories*. Flow and internal process control parameters are exempt from this requirement.

S3. Reporting and recording requirements

The Permittee must monitor and report in accordance with the following conditions. Falsification of information submitted to Ecology is a violation of the terms and conditions of this permit.

S3.A. Discharge monitoring reports

The first monitoring period begins on the effective date of the permit. Permittee must:

1. Summarize, report, and submit monitoring data obtained during each monitoring period on the electronic discharge monitoring report (DMR) form provided by Ecology within the Water Quality Permitting Portal. Include data for each of the parameters tabulated in Special Condition S2 and as required by the form. Report a value for each day sampling occurred and for the summary values (when applicable) included on the electronic form.

   To find out more information and to sign up for the Water Quality Permitting Portal go to: http://www.ecy.wa.gov/programs/wq/permits/paris/webdmr.html
2. Enter the "No Discharge" reporting code for an entire DMR, for a specific monitoring point, or for a specific parameter as appropriate, if the Permittee did not discharge wastewater or a specific pollutant during a given monitoring period.
3. Report single analytical values below detection as "less than the detection level (DL)" by entering < followed by the numeric value of the detection level (e.g. < 2.0) on the DMR. If the method used did not meet the minimum DL and quantitation level (QL) identified in the permit, report the actual QL and DL in the comments or in the location provided.
4. **Not** report zero for bacteria monitoring. Report as required by the laboratory method.
5. Calculate the geometric mean values for bacteria using:

a. The reported numeric value for all bacteria samples measured above the detection value except when it took multiple samples in one day. If the Permittee takes multiple samples in one day it must use the arithmetic average for that day in the geometric mean calculation.

b. The detection value for those samples measured below detection.

6. Report the test method used for analysis in the comments if the laboratory used an alternative method not specified in the permit and as allowed in Appendix A.

7. Calculate average values and total values (unless otherwise specified in the permit) using:

   a. The reported numeric value for all parameters measured between the agency-required detection value and the agency-required quantitation value.

   b. One-half the detection value (for values reported below detection) if the lab detected the parameter in another sample from the same monitoring point for the reporting period.

   c. Zero (for values reported below detection) if the lab did not detect the parameter in another sample for the reporting period.

8. Report single-sample grouped parameters (for example: priority pollutants) on the WQWebDMR form and include sample date, concentration detected, detection limit (DL) (as necessary), laboratory quantitation level (QL) (as necessary), and CAS number. The Permittee must also submit an electronic copy of the laboratory report as an attachment using WQWebDMR. The contract laboratory reports must also include information on the chain of custody, QA/QC results, and documentation of accreditation for the parameter.

9. Ensure that DMRs are electronically submitted no later than the dates specified below, unless otherwise specified in this permit.

10. Submit DMRs in WQWebDMR for parameters with the monitoring frequencies specified in S2 (monthly, annually, etc.) at the reporting schedule identified below. The Permittee must:

    a. Submit **monthly** DMRs by the 15th day of the following month.

    b. Submit **annual** DMRs by July 31th for the previous calendar year. These submittals must include the permit renewal application monitoring data, priority pollutant, cyanide, and phenolic compound data as required in Special Condition S2.A. The annual sampling period is the calendar year.

S3.B. Permit submittals and schedules

The Permittee must use the *Water Quality Permitting Portal – Permit Submittals* application to submit all other written permit-required reports by the date specified in the permit.

When another permit condition requires submittal of a paper (hard-copy) report, the Permittee must ensure that it is postmarked or received by Ecology no later than the dates specified by this permit. Send these paper reports to Ecology at:

Water Quality Permit Coordinator
Department of Ecology
Northwest Regional Office
3190 160th Avenue SE
Bellevue, WA 98008-5452

S3.C. Records retention

The Permittee must retain records of all monitoring information for a minimum of three (3) years. Such information must include all calibration and maintenance records and all original recordings for continuous monitoring instrumentation, copies of all reports required by this permit, and records of all data used to complete the application for this permit. The Permittee must extend this period of retention during the course of any unresolved litigation regarding the discharge of pollutants by the Permittee or when requested by Ecology.

S3.D. Recording of results

For each measurement or sample taken, the Permittee must record the following information:

1. The date, exact place, method, and time of sampling or measurement.
2. The individual who performed the sampling or measurement.
3. The dates the analyses were performed.
4. The individual who performed the analyses.
5. The analytical techniques or methods used.
6. The results of all analyses.

S3.E. Additional monitoring by the Permittee

If the Permittee monitors any pollutant more frequently than required by Special Condition S2 of this permit, then the Permittee must include the results of such monitoring in the calculation and reporting of the data submitted in the Permittee's DMR unless otherwise specified by Special Condition S2.

S3.F. Reporting permit violations

The Permittee must take the following actions when it violates or is unable to comply with any permit condition:

1. Immediately take action to stop, contain, and cleanup unauthorized discharges or otherwise stop the noncompliance and correct the problem.
2. If applicable, immediately repeat sampling and analysis. Submit the results of any repeat sampling to Ecology within thirty (30) days of sampling.

a. Immediate reporting

The Permittee must **immediately** report to Ecology and the Department of Health, Shellfish Program, and Public Health of Seattle-King County (phone numbers listed below), all:

- Failures of the disinfection system
- Collection system overflows
- Plant bypasses discharging to marine surface waters
- Any other failures of the sewage system (pipe breaks, etc.)

The Permittee must also *immediately* report any collection system overflows discharging to a waterbody used as a source of drinking water to Ecology, the Department of Health Drinking Water Program, and Public Health of Seattle-King County.

Ecology - Northwest Regional Office	425-649-7000
Department of Health - Shellfish Program	360-236-3330 (business hours) 360-789-8962 (after business hours)
Public Health of Seattle-King County	206-477-8177
Department of Health, Drinking Water Program	800-521-0323 (business hours) 877-481-4901 (after business hours)

Additionally, for any sanitary sewer overflow (SSO) that discharges to a municipal separate storm sewer system (MS4), the Permittee must notify the appropriate MS4 owner or operator.

b. Twenty-four-hour reporting

The Permittee must report the following occurrences of noncompliance by telephone, to Ecology at the telephone number listed above, within 24 hours from the time the Permittee becomes aware of any of the following circumstances:

i. Any noncompliance that may endanger health or the environment, unless previously reported under immediate reporting requirements.

ii. Any unanticipated bypass that causes an exceedance of an effluent limit in the permit (See Part S5.F, “Bypass Procedures”).

iii. Any upset that causes an exceedance of an effluent limit in the permit (see G15, “Upset”).

iv. Any violation of a maximum daily or instantaneous maximum discharge limit for any of the pollutants in Section S1.A of this permit.

v. Any overflow prior to the treatment works, whether or not such overflow endangers health or the environment or exceeds any effluent limit in the permit.

c. Report within five days

The Permittee must also submit a written report within five business days of the time that the Permittee becomes aware of any reportable event under subparts a or b, above. The report must contain:

i. A description of the noncompliance and its cause.

ii. The period of noncompliance, including exact dates and times.

iii. The estimated time the Permittee expects the noncompliance to continue if not yet corrected.

iv. Steps taken or planned to reduce, eliminate, and prevent recurrence of the noncompliance.

v. If the noncompliance involves an overflow prior to the treatment works, an estimate of the quantity (in gallons) of untreated overflow.

d. Waiver of written reports

Ecology may waive the written report required in subpart c, above, on a case-by-case basis upon request if the Permittee has submitted a timely oral report.

e. All other permit violation reporting

The Permittee must report all permit violations, which do not require immediate or within 24 hours reporting, when it submits monitoring reports for S3.A ("Reporting"). The reports must contain the information listed in subpart c, above. Compliance with these requirements does not relieve the Permittee from responsibility to maintain continuous compliance with the terms and conditions of this permit or the resulting liability for failure to comply.

S3.G. Other reporting

1. Spills of oil or hazardous materials

The Permittee must report a spill of oil or hazardous materials in accordance with the requirements of RCW 90.56.280 and chapter 173-303-145. You can obtain further instructions at the following website: http://www.ecy.wa.gov/programs/spills/other/reportaspill.htm .

2. Failure to submit relevant or correct facts

Where the Permittee becomes aware that it failed to submit any relevant facts in a permit application, or submitted incorrect information in a permit application, or in any report to Ecology, it must submit such facts or information promptly.

S3.H. Maintaining a copy of this permit

The Permittee must keep a copy of this permit at the facility and make it available upon request to Ecology inspectors.

S4. Facility loading

S4.A. Design criteria

The flows or waste loads for the permitted facility must not exceed the following design criteria:

Maximum Month Design Flow (MMDF)	144 MGD
BOD_5 Influent Loading for Maximum Month	251,000 lbs/day
TSS Influent Loading for Maximum Month	235,000 lbs/day

S4.B. Plans for maintaining adequate capacity

1. Conditions triggering plan submittal

   The Permittee must submit a plan and a schedule for continuing to maintain capacity to Ecology when:

   a. The actual flow or waste load reaches 85 percent of any one of the design criteria in S4.A for three consecutive months.

   b. The projected plant flow or loading would reach design capacity within five years.

2. Plan and schedule content

   The plan and schedule must identify the actions necessary to maintain adequate capacity for the expected population growth and to meet the limits and requirements of the permit. The Permittee must consider the following topics and actions in its plan.

   a. Analysis of the present design and proposed process modifications.

   b. Reduction or elimination of excessive infiltration and inflow of uncontaminated ground and surface water into the sewer system.

   c. Limits on future sewer extensions or connections or additional waste loads.

   d. Modification or expansion of facilities.

   e. Reduction of industrial or commercial flows or waste loads

   Engineering documents associated with the plan must meet the requirements of WAC 173-240-060, "Engineering Report," and be approved by Ecology prior to any construction.

S4.C. Duty to mitigate

The Permittee must take all reasonable steps to minimize or prevent any discharge or biosolids use or disposal in violation of this permit that has a reasonable likelihood of adversely affecting human health or the environment.

S4.D. Notification of new or altered sources

1. The Permittee must submit written notice to Ecology whenever any new discharge or a substantial change in volume or character of an existing discharge into the wastewater treatment plant is proposed which:
   a. Would interfere with the operation of, or exceed the design capacity of, any portion of the wastewater treatment plant.
   b. Is not part of an approved general sewer plan or approved plans and specifications.
   c. Is subject to pretreatment standards under 40 CFR Part 403 and Section 307(b) of the Clean Water Act.
2. This notice must include an evaluation of the wastewater treatment plant's ability to adequately transport and treat the added flow and/or waste load, the quality and volume of effluent to be discharged to the treatment plant, and the anticipated impact on the Permittee's effluent [40 CFR 122.42(b)].

S4.E. Wasteload assessment

The Permittee must conduct an assessment of its influent flow and waste load and submit a report to Ecology by October 31, 2018. The report must contain:

1. A description of compliance or noncompliance with the permit effluent limits.
2. A comparison between the existing and design:
   a. Monthly average dry weather and wet weather flows.
   b. Maximum month flows.
   c. Peak flows.
   d. BOD_5 loadings.
   e. Total suspended solids loadings.
3. The percent change in the above parameters since the previous report.
4. The present and design population or population equivalent.
5. The projected population growth rate.
6. The estimated date upon which the Permittee expects the wastewater treatment plant to reach design capacity, according to the most restrictive of the parameters above.
7. An Infiltration and Inflow (I/I) update that describes:
   a. For the collection system owned and operated by the County:
      i. The results of recent I/I monitoring
      ii. A summary of recent I/I improvement projects.
      iii. Projects planned to improve I/I.

b. For the collection systems owned and operated by component agencies:

i. Measures taken to encourage component agencies to control I/I.

ii. Any known I/I concerns.

iii. Steps planned to further encourage I/I reduction projects.

S5. Operation and maintenance

The Permittee must at all times properly operate and maintain all facilities and systems of treatment and control (and related appurtenances), which are installed to achieve compliance with the terms and conditions of this permit. Proper operation and maintenance also includes keeping a daily operation logbook (paper or electronic), adequate laboratory controls, and appropriate quality assurance procedures. This provision of the permit requires the Permittee to operate backup or auxiliary facilities or similar systems only when the operation is necessary to achieve compliance with the conditions of this permit.

S5.A. Certified operator

This permitted facility must be operated by an operator certified by the state of Washington for at least a Class IV plant. This operator must be in responsible charge of the day-to-day operation of the wastewater treatment plant. An operator certified for at least a Class III plant must be in charge during all regularly scheduled shifts.

S5.B. Operation and maintenance program

The Permittee must:

1. Institute an adequate operation and maintenance program for the entire sewage system.
2. Keep maintenance records on all major electrical and mechanical components of the treatment plant, as well as the sewage system and pumping stations. Such records must clearly specify the frequency and type of maintenance recommended by the manufacturer and must show the frequency and type of maintenance performed.
3. Make maintenance records available for inspection at all times.

S5.C. Short-term reduction

The Permittee must schedule any facility maintenance, which might require interruption of wastewater treatment and degrade effluent quality, during non-critical water quality periods and carry this maintenance out according to the approved O&M manual or as otherwise approved by Ecology.

If a Permittee contemplates a reduction in the level of treatment that would cause a violation of permit discharge limits on a short-term basis for any reason, and such reduction cannot be avoided, the Permittee must:

1. Give written notification to Ecology, if possible, thirty (30) days prior to such activities.
2. Detail the reasons for, length of time of, and the potential effects of the reduced level of treatment.

This notification does not relieve the Permittee of its obligations under this permit.

S5.D. Electrical power failure

The Permittee must ensure that adequate safeguards prevent the discharge of untreated wastes or wastes not treated in accordance with the requirements of this permit during electrical power failure at the treatment plant and/or sewage lift stations. Adequate safeguards include, but are not limited to, alternate power sources, standby generator(s), or retention of inadequately treated wastes.

The Permittee must maintain Reliability Class II (EPA 430-99-74-001) at the wastewater treatment plant. Reliability Class II requires a backup power source sufficient to operate all vital components and critical lighting and ventilation during peak wastewater flow conditions. Vital components used to support the secondary processes (i.e., mechanical aerators or aeration basin air compressors) need not be operable to full levels of treatment, but must be sufficient to maintain the biota.

S5.E. Prevent connection of inflow

The Permittee must strictly enforce its sewer ordinances and not allow the connection of inflow (roof drains, foundation drains, etc.) to the sanitary sewer system within King County control.

S5.F. Bypass procedures

This permit prohibits a bypass, which is the intentional diversion of waste streams from any portion of a treatment facility. Ecology may take enforcement action against a Permittee for a bypass unless one of the following circumstances (1, 2, or 3) applies.

1. Bypass for essential maintenance without the potential to cause violation of permit limits or conditions.

   This permit authorizes a bypass if it allows for essential maintenance and does not have the potential to cause violations of limits or other conditions of this permit, or adversely impact public health as determined by Ecology prior to the bypass. The Permittee must submit prior notice, if possible, at least ten (10) days before the date of the bypass.

2. Bypass which is unavoidable, unanticipated, and results in noncompliance of this permit.

   This permit authorizes such a bypass only if:

a. Bypass is unavoidable to prevent loss of life, personal injury, or severe property damage. “Severe property damage” means substantial physical damage to property, damage to the treatment facilities which would cause them to become inoperable, or substantial and permanent loss of natural resources which can reasonably be expected to occur in the absence of a bypass.

b. No feasible alternatives to the bypass exist, such as:

- The use of auxiliary treatment facilities.
- Retention of untreated wastes.
- Maintenance during normal periods of equipment downtime, but not if the Permittee should have installed adequate backup equipment in the exercise of reasonable engineering judgment to prevent a bypass.
- Transport of untreated wastes to another treatment facility.

c. Ecology is properly notified of the bypass as required in Special Condition S3.F of this permit.

3. If bypass is anticipated and has the potential to result in noncompliance of this permit.

a. The Permittee must notify Ecology at least thirty (30) days before the planned date of bypass. The notice must contain:

- A description of the bypass and its cause.
- An analysis of all known alternatives which would eliminate, reduce, or mitigate the need for bypassing.
- A cost-effectiveness analysis of alternatives including comparative resource damage assessment.
- The minimum and maximum duration of bypass under each alternative.
- A recommendation as to the preferred alternative for conducting the bypass.
- The projected date of bypass initiation.
- A statement of compliance with SEPA.
- A request for modification of water quality standards as provided for in WAC 173-201A-410, if an exceedance of any water quality standard is anticipated.
- Details of the steps taken or planned to reduce, eliminate, and prevent reoccurrence of the bypass.

b. For probable construction bypasses, the Permittee must notify Ecology of the need to bypass as early in the planning process as possible. The Permittee must consider the analysis required above during the project planning and design process. The project-specific engineering report or facilities plan as well as the plans and specifications must include details of probable construction bypasses to the extent practical. In cases where

the Permittee determines the probable need to bypass early, the Permittee must continue to analyze conditions up to and including the construction period in an effort to minimize or eliminate the bypass.

c. Ecology will consider the following prior to issuing an administrative order for this type of bypass:

- If the bypass is necessary to perform construction or maintenance-related activities essential to meet the requirements of this permit.
- If feasible alternatives to bypass exist, such as the use of auxiliary treatment facilities, retention of untreated wastes, stopping production, maintenance during normal periods of equipment down time, or transport of untreated wastes to another treatment facility.
- If the Permittee planned and scheduled the bypass to minimize adverse effects on the public and the environment.

After consideration of the above and the adverse effects of the proposed bypass and any other relevant factors, Ecology will approve or deny the request. Ecology will give the public an opportunity to comment on bypass incidents of significant duration, to the extent feasible. Ecology will approve a request to bypass by issuing an administrative order under RCW 90.48.120.

S5.G. Operations and maintenance (O&M) manuals

1. O&M manual submittal and requirements

   The Permittee must:

   a. Review the O&M Manuals at least annually.

   b. Submit to Ecology for review and approval substantial changes or updates to the O&M Manuals.

   c. Keep the approved O&M Manuals at the permitted facility.

   d. Follow the instructions and procedures of the manuals.

2. O&M manual components

   In addition to the requirements of WAC 173-240-080 (1) through (5), the O&M manuals must include:

   a. Emergency procedures for cleanup in the event of wastewater system upset or failure.

   b. A review of system components which if failed could pollute surface water or could impact human health. Provide a procedure for a routine schedule of checking the function of these components.

   c. Wastewater system maintenance procedures that contribute to the generation of process wastewater.

d. Reporting protocols for submitting reports to Ecology to comply with the reporting requirements in the discharge permit.

e. Any directions to maintenance staff when cleaning or maintaining other equipment or performing other tasks which are necessary to protect the operation of the wastewater system (for example, defining maximum allowable discharge rate for draining a tank, blocking all floor drains before beginning the overhaul of a stationary engine).

f. The treatment plant process control monitoring schedule.

S6. Pretreatment

S6.A. General requirements

1. The Permittee must implement the Industrial Pretreatment Program in accordance with King County Code 28.84.060 as amended by King County Ordinance No. 11963 on January 1, 1996, legal authorities, policies, procedures, and financial provisions described in the Permittee's approved pretreatment program submittal entitled "Industrial Pretreatment Program" and dated April 27, 1981; any approved revisions thereto; and the General Pretreatment Regulations (40 CFR Part 403). At a minimum, the Permittee must undertake the following pretreatment implementation activities:

   a. Enforce categorical pretreatment standards under Section 307(b) and (c) of the Federal Clean Water Act (hereinafter, the Act), prohibited discharge standards as set forth in 40 CFR 403.5, local limits, or state standards, which ever are most stringent or apply at the time of issuance or modification of a local industrial waste discharge permit. Locally derived limits are defined as pretreatment standards under Section 307(d) of the Act and are not limited to categorical industrial facilities.

   b. Issue industrial waste discharge permits to all significant industrial users [SIUs, as defined in 40 CFR 403.3(v)(i)(ii)] contributing to the treatment system, including those from other jurisdictions. Industrial waste discharge permits must contain as a minimum, all the requirements of 40 CFR 403.8 (f)(l)(iii). The Permittee must coordinate the permitting process with Ecology regarding any industrial facility which may possess a state waste discharge permit issued by Ecology.

   c. Maintain and update, as necessary, records identifying the nature, character, and volume of pollutants contributed by industrial users to the treatment works. The Permittee must maintain records for at least a three-year period.

   d. Perform inspections, surveillance, and monitoring activities on industrial users to determine or confirm compliance with pretreatment standards and requirements. The Permittee must conduct a thorough inspection of SIUs annually, except Middle-Tier Categorical Industrial Users, as defined by 40 CFR 403.8(f)(2)(v)(B)&(C), need only be inspected once every two

years. The Permittee must conduct regular local monitoring of SIU wastewaters commensurate with the character and volume of the wastewater but not less than once per year except for Middle-Tier Categorical Industrial Users which may be sampled once every two years. The Permittee must collect and analyze samples in accordance with 40 CFR Part 403.12(b)(5)(ii)-(v) and 40 CFR Part 136.

e. Enforce and obtain remedies for non-compliance by any industrial users with applicable pretreatment standards and requirements. Once violations have been identified, the Permittee must take timely and appropriate enforcement action to address the non-compliance. The Permittee's action must follow its enforcement response procedures and any amendments, thereof.

f. Publish, at least annually in a newspaper of general circulation within the Permittee's service area, a list of all non-domestic users which, at any time in the previous 12 months, were in significant non-compliance as defined in 40 CFR 403.8(f)(2)(vii).

g. If the Permittee elects to conduct sampling of an SIU's discharge in lieu of requiring user self-monitoring, it must satisfy all requirements of 40 CFR Part 403.12. This includes monitoring and record keeping requirements of sections 403.12(g) and (o). For SIU's subject to categorical standards (i.e., CIUs), the Permittee may either complete baseline and initial compliance reports for the CIU (when required by 403.12(b) and (d)) or require these of the CIU. The Permittee must ensure SIUs are provided the results of sampling in a timely manner, inform SIUs of their right to sample, their obligations to report any sampling they do, to respond to non-compliance, and to submit other notifications. These include a slug load report (403.12(f)), notice of changed discharge (403.12(j)), and hazardous waste notifications (403.12(p)). If sampling for the SIU, the Permittee must not sample less than once in every six month period unless the Permittee's approved program includes procedures for reduction of monitoring for Middle-Tier or Non-Significant Categorical Users per 403.12(e)(2) and (3) and those procedures have been followed.

h. Develop and maintain a data management system designed to track the status of the Permittee's industrial user inventory, industrial user discharge characteristics, and compliance status.

i. Maintain adequate staff, funds, and equipment to implement its pretreatment program.

j. Establish, where necessary, contracts or legally binding agreements with contributing jurisdictions to ensure compliance with applicable pretreatment requirements by commercial or industrial users within these jurisdictions. These contracts or agreements must identify the agency responsible for the various implementation and enforcement activities to be performed in the contributing jurisdiction.

2. Per 40 CFR 403.8(f)(2)(vii), the Permittee must evaluate each Significant Industrial User to determine if a Slug Control Plan is needed to prevent slug discharges which may cause interference, pass-through, or in any other way result in violations of the Permittee's regulations, local limits or permit conditions. The Slug Control Plan evaluation shall occur within one year of a user's designation as a SIU. In accordance with 40 CFR 403.8(f)(1)(iii)(B)(6) the Permittee shall include slug discharge control requirements in an SIU's permit if the Permittee determines that they are necessary.

3. Whenever Ecology determines that any waste source contributes pollutants to the Permittee's treatment works in violation of Subsection (b), (c), or (d) of Section 307 of the Act, and the Permittee has not taken adequate corrective action, Ecology will notify the Permittee of this determination. If the Permittee fails to take appropriate enforcement action within 30 days of this notification, Ecology may take appropriate enforcement action against the source or the Permittee.

4. Pretreatment Report

   The Permittee must provide to Ecology an annual report that briefly describes its program activities during the previous calendar year. By April 30th, the Permittee must send the annual report to Ecology at:

   Water Quality Permit Coordinator
   Department of Ecology
   Northwest Regional Office
   3190 160th Avenue SE
   Bellevue, WA 98008-5452

   The report must include the following information:

   a. An updated listing of non-domestic industrial dischargers.

   b. Results of wastewater sampling at the treatment plant as specified in Subsection S6.B below. The Permittee must calculate removal rates for each pollutant and evaluate the adequacy of the existing local limits in prevention of treatment plant interference, pass through of pollutants that could affect receiving water quality and biosolids contamination.

   c. Status of program implementation, including:

      i. Any substantial modifications to the pretreatment program as originally approved by Ecology, including staffing and funding levels.

      ii. Any interferences, upsets, or permit violations experienced at the WWTP that are directly attributable to wastes from industrial users.

      iii. Listing of industrial users inspected and/or monitored, and a summary of the results.

      iv. Listing of industrial users scheduled for inspection and/or monitoring for the next year, and expected frequencies.

v. Listing of industrial users notified of promulgated pretreatment standards and/or local standards as required in 40 CFR 403.8(f)(2)(iii). The list must indicate which industrial users are on compliance schedules and the final date of compliance for each.

vi. Listing of industrial users issued industrial waste discharge permits.

vii. Planned changes in the pretreatment program implementation plan.

d. Status of compliance activities, including:

i. Listing of industrial users that failed to submit baseline monitoring reports or any other reports required under 40 CFR 403.12 and in the Permittee's pretreatment program, dated April 27, 1981.

ii. Listing of industrial users that were at any time during the reporting period not complying with federal, state, or local pretreatment standards or with applicable compliance schedules for achieving those standards, and the duration of such non-compliance.

iii. Summary of enforcement activities and other corrective actions taken or planned against non-complying industrial users. The Permittee must supply to Ecology a copy of the public notice of facilities that were in significant non-compliance.

5. The Permittee must request and obtain approval from Ecology before making any significant changes to the approved local pretreatment program. The Permittee must follow the procedure in 40 CFR 403.18 (b) and (c).

S6.B. Monitoring requirements

The Permittee must monitor its influent, effluent, and biosolids at the South Plant WWTP for the priority pollutants identified in Tables II and III of Appendix D of 40 CFR Part 122 as amended, any compounds identified as a result of Condition S6.B.4, and any other pollutants expected from nondomestic sources using U.S. EPA-approved procedures for collection, preservation, storage, and analysis. The Permittee must test influent, effluent, and biosolids samples for the priority pollutant metals (Table III, 40 CFR 122, Appendix D) on a quarterly basis throughout the term of this permit. The Permittee must test influent, effluent, and biosolids samples for the organic priority pollutants (Table II, 40 CFR 122, Appendix D) on an annual basis.

1. The Permittee must sample South Plant WWTP influent and effluent on a day when industrial discharges are occurring at normal to maximum levels. The Permittee must obtain 24-hour composite samples for the analysis of acid and base/neutral extractable compounds and metals. The Permittee must collect samples for the analysis of volatile organic compounds and samples must be collected using grab sampling techniques at equal intervals for a total of four grab samples per day.

   The laboratory may run a single analysis for volatile pollutants (using GC/MS procedures approved by 40 CFR 136) for each monitoring day by

compositing equal volumes of each grab sample directly in the GC purge and trap apparatus in the laboratory, with no less than 1 ml of each grab included in the composite.

Unless otherwise indicated, all reported test data for metals must represent the total amount of the constituent present in all phases, whether solid, suspended, or dissolved, elemental or combined including all oxidation states.

The Permittee must handle, prepare, and analyze all wastewater samples taken for GC/MS analysis using procedures approved by 40 CFR 136.

2. The Permittee must collect a biosolids sample concurrently with a wastewater sample as a single grab sample of residual biosolids. Sampling and analysis must be performed using procedures approved by 40 CFR 136 unless the Permittee requests an alternate method and Ecology has approved.
3. The Permittee must take cyanide, phenols, and oils as grab samples. Oils must be hexane soluble or equivalent, and should be measured in the influent and effluent only.
4. In addition to quantifying pH, oil and grease, and all priority pollutants, the Permittee must make a reasonable attempt to identify all other substances and quantify all pollutants shown to be present by gas chromatograph/mass spectrometer (GC/MS) analysis using procedures approved by 40 CFR 136. The Permittee should attempt to make determinations of pollutants for each fraction, which produces identifiable spectra on total ion plots (reconstructed gas chromatograms). The Permittee should attempt to make determinations from all peaks with responses 5% or greater than the nearest internal standard. The 5% value is based on internal standard concentrations of 30 μg/l, and must be adjusted downward if higher internal standard concentrations are used or adjusted upward if lower internal standard concentrations are used. The Permittee may express results for non-substituted aliphatic compounds as total hydrocarbon content. The Permittee must use a laboratory whose computer data processing programs are capable of comparing sample mass spectra to a computerized library of mass spectra, with visual confirmation by an experienced analyst. For all detected substances which are determined to be pollutants, the Permittee must conduct additional sampling and appropriate testing to determine concentration and variability, and to evaluate trends.

S6.C. Reporting of monitoring results

The Permittee must include a summary of monitoring results in the Annual Pretreatment Report.

S6.D. Local limit development

As sufficient data become available, the Permittee must, in consultation with Ecology, reevaluate their local limits in order to prevent pass through or interference. If Ecology determines that any pollutant present causes pass through or interference, or exceeds established biosolids standards, the Permittee must

establish new local limits or revise existing local limits as required by 40 CFR 403.5. Ecology may also require the Permittee to revise or establish local limits for any pollutant discharged from the treatment works that has a reasonable potential to exceed the water quality standards, sediment standards, or established effluent limits, or causes whole effluent toxicity. Ecology makes this determination in the form of an Administrative Order.

Ecology may modify this permit to incorporate additional requirements relating to the establishment and enforcement of local limits for pollutants of concern. Any permit modification is subject to formal due process procedures under state and federal law and regulation.

S7. Solid wastes

S7.A. Solid waste handling

The Permittee must handle and dispose of all solid waste material in such a manner as to prevent its entry into state ground or surface water.

S7.B. Leachate

The Permittee must not allow leachate from its solid waste material to enter state waters without providing all known, available, and reasonable methods of treatment, nor allow such leachate to cause violations of the State Surface Water Quality Standards, Chapter 173-201A WAC, or the State Ground Water Quality Standards, Chapter 173-200 WAC. The Permittee must apply for a permit or permit modification as may be required for such discharges to state ground or surface waters.

S8. Spill control plan

S8.A Spill control plan submittals and requirements

The Permittee must:

1. Review the existing spill plan at least annually and update the spill plan as needed.
2. Send significant changes to the plan to Ecology.
3. Follow the plan and any supplements throughout the term of the permit.

S8.B. Spill control plan components

The spill control plan must include the following:

1. A list of all oil and petroleum products and other materials used and/or stored on-site, which when spilled, or otherwise released into the environment, designate as dangerous waste (DW) or extremely hazardous waste (EHW) by the procedures set forth in WAC 173-303-070. Include other materials used and/or stored on-site which may become pollutants or cause pollution upon reaching state's waters.

2. A description of preventive measures and facilities (including an overall facility plot showing drainage patterns) which prevent, contain, or treat spills of these materials.
3. A description of the reporting system the Permittee will use to alert responsible managers and legal authorities in the event of a spill.
4. A description of operator training to implement the plan.

The Permittee may submit plans and manuals required by 40 CFR Part 112, contingency plans required by Chapter 173-303 WAC, or other plans required by other agencies, which meet the intent of this section.

S9. Sediment monitoring

S9.A. Sediment sampling and analysis plan

The Permittee must submit to Ecology for review and approval a sediment sampling and analysis plan for sediment monitoring by December 1, 2016. The purpose of the plan is to recharacterize sediment (the nature and extent of chemical contamination and biological toxicity) quality in the vicinity of the Permittee's discharge locations. The Permittee must sample the top 10 cm of sediment at the same eight stations sampled during the previous permit term, and the sediments must be analyzed for the 47 chemicals with SMS numeric criteria as well as conventional analytes. The Permittee must follow the guidance provided in the current version of the *Sediment Source Control Standards User Manual, Appendix B: sediment sampling and analysis plan.*

S9.B. Sediment data report

Following Ecology approval of the sediment sampling and analysis plan, the Permittee must collect sediments between August 15th and September 30th of 2017. The Permittee must submit to Ecology a sediment data report containing the results of the sediment sampling and analysis no later than December 1, 2018. The sediment data report must conform to the approved sediment sampling and analysis plan. The report must document when the data was successfully loaded into EIM as required below.

In addition to a sediment data report, submit the sediment chemical and any biological data to Ecology's EIM database (http://www.ecy.wa.gov/eim/). Data must be submitted to EIM according to the instructions on the EIM website. The data submittal portion of the EIM website (http://www.ecy.wa.gov/eim/submitdata.htm) provides information and help on formats and requirements for submitting tabular data.

S10. Acute toxicity

S10.A. Testing when there is no permit limit for acute toxicity

The Permittee must:

1. Conduct acute toxicity testing on final effluent once in the first quarter of 2018 and once in the third quarter of 2018.
2. Conduct acute toxicity testing on a series of at least five concentrations of effluent, including 100% effluent and a control.
3. Use each of the following species and protocols for each acute toxicity test:

Acute Toxicity Tests	Species	Method
Fathead minnow 96-hour static-renewal test	*Pimephales promelas*	EPA-821-R-02-012
Daphnid 48-hour static test	*Ceriodaphnia dubia, Daphnia pulex,* or *Daphnia magna*	EPA-821-R-02-012

4. Submit the results to Ecology with the permit renewal application.

S10.B. Sampling and reporting requirements

1. The Permittee must submit all reports for toxicity testing in accordance with the most recent version of Ecology Publication No. WQ-R-95-80, *Laboratory Guidance and Whole Effluent Toxicity Test Review Criteria*. Reports must contain toxicity data, bench sheets, and reference toxicant results for test methods. In addition, the Permittee must submit toxicity test data in electronic format (CETIS export file preferred) for entry into Ecology's database.
2. The Permittee must collect 24-hour composite effluent samples for toxicity testing. The Permittee must cool the samples to 0 - 6 degrees Celsius during collection and send them to the lab immediately upon completion. The lab must begin the toxicity testing as soon as possible but no later than 36 hours after sampling was completed.
3. The laboratory must conduct water quality measurements on all samples and test solutions for toxicity testing, as specified in the most recent version of Ecology Publication No. WQ-R-95-80, *Laboratory Guidance and Whole Effluent Toxicity Test Review Criteria*.
4. All toxicity tests must meet quality assurance criteria and test conditions specified in the most recent versions of the EPA methods listed in Subsection C and the Ecology Publication No. WQ-R-95-80, *Laboratory Guidance and Whole Effluent Toxicity Test Review Criteria*. If Ecology determines any test results to be invalid or anomalous, the Permittee must repeat the testing with freshly collected effluent.
5. The laboratory must use control water and dilution water meeting the requirements of the EPA methods listed in Section A or pristine natural water of sufficient quality for good control performance.

6. The Permittee must collect effluent samples for whole effluent toxicity testing just prior to the chlorination step in the treatment process.
7. The Permittee may choose to conduct a full dilution series test during compliance testing in order to determine dose response. In this case, the series must have a minimum of five effluent concentrations and a control. The series of concentrations must include the acute critical effluent concentration (ACEC). The ACEC equals 0.54% effluent.
8. All whole effluent toxicity tests, effluent screening tests, and rapid screening tests that involve hypothesis testing must comply with the acute statistical power standard of 29% as defined in WAC 173-205-020. If the test does not meet the power standard, the Permittee must repeat the test on a fresh sample with an increased number of replicates to increase the power.

S11. Chronic toxicity

S11.A. Testing when there is no permit limit for chronic toxicity

The Permittee must:

1. Conduct chronic toxicity testing on final effluent once in the second quarter of 2018 and once in the fourth quarter of 2018.
2. Conduct chronic toxicity testing on a series of at least five concentrations of effluent and a control. This series of dilutions must include the acute critical effluent concentration (ACEC). The ACEC equals 0.54% effluent. The series of dilutions should also contain the CCEC of 0.44% effluent.
3. Compare the ACEC to the control using hypothesis testing at the 0.05 level of significance as described in Appendix H, EPA/600/4-89/001.
4. Submit the results to Ecology with the next permit renewal application.
5. Perform chronic toxicity tests with all of the following species and the most recent version of the following protocols:

Saltwater Chronic Test	Species	Method
Topsmelt survival and growth	*Atherinops affinis*	EPA/600/R-95/136
Mysid shrimp survival and growth	*Americamysis bahia* (formerly *Mysidopsis bahia*)	EPA-821-R-02-014

S11.B. Sampling and reporting requirements

1. The Permittee must submit all reports for toxicity testing in accordance with the most recent version of Ecology Publication No. WQ-R-95-80, *Laboratory Guidance and Whole Effluent Toxicity Test Review Criteria*. Reports must contain toxicity data, bench sheets, and reference toxicant results for test methods. In addition, the Permittee must submit toxicity test data in electronic format (CETIS export file preferred) for entry into Ecology's database.

2. The Permittee must collect 24-hour composite effluent samples for toxicity testing. The Permittee must cool the samples to 0 - 6 degrees Celsius during collection and send them to the lab immediately upon completion. The lab must begin the toxicity testing as soon as possible but no later than 36 hours after sampling was completed.
3. The laboratory must conduct water quality measurements on all samples and test solutions for toxicity testing, as specified in the most recent version of Ecology Publication No. WQ-R-95-80, *Laboratory Guidance and Whole Effluent Toxicity Test Review Criteria*.
4. All toxicity tests must meet quality assurance criteria and test conditions specified in the most recent versions of the EPA methods listed in Section C and the Ecology Publication No. WQ-R-95-80, *Laboratory Guidance and Whole Effluent Toxicity Test Review Criteria*. If Ecology determines any test results to be invalid or anomalous, the Permittee must repeat the testing with freshly collected effluent.
5. The laboratory must use control water and dilution water meeting the requirements of the EPA methods listed in Subsection C or pristine natural water of sufficient quality for good control performance.
6. The Permittee must collect effluent samples for whole effluent toxicity testing just prior to the chlorination step in the treatment process.
7. The Permittee may choose to conduct a full dilution series test during compliance testing in order to determine dose response. In this case, the series must have a minimum of five effluent concentrations and a control. The series of concentrations must include the CCEC and the ACEC. The CCEC and the ACEC may either substitute for the effluent concentrations that are closest to them in the dilution series or be extra effluent concentrations. The CCEC equals 0.44% effluent. The ACEC equals 0.54% effluent.
8. All whole effluent toxicity tests that involve hypothesis testing must comply with the chronic statistical power standard of 39% as defined in WAC 173-205-020. If the test does not meet the power standard, the Permittee must repeat the test on a fresh sample with an increased number of replicates to increase the power.

S12. Use of effluent from effluent transfer system

The Permittee may distribute effluent from the effluent transfer system (ETS) for use and return to the ETS for discharge via Outfall #001 of this permit – without modification of this permit – under the following conditions:

1. The distributed ETS effluent must meet all treatment and disinfection requirements of Condition S1 of this permit.
2. The effluent is used at the Boeing facility in the approved, closed loop, noncontact chiller project.

3. The Permittee may distribute ETS effluent to a similar closed-loop, noncontact system only after it requests and receives specific written approval from both the Departments of Ecology and Health.
4. The effluent returned to the ETS system for discharge via Outfall #001 must meet all permit requirements for that discharge.
5. The Permittee obtains, files, and enforces a signed user contract assuring compliance with all requirements of the approved project. All new contracts must be approved by the Departments of Ecology and Health and signed by all parties prior to any distribution of the effluent.
6. The Permittee immediately notifies all users during instances of noncompliance.

No other uses of ETS effluent are authorized under this permit.

S13. Application for permit renewal or modification for facility changes

The Permittee must submit an application for renewal of this permit by July 31, 2019.

The Permittee must also submit a new application or supplement at least one hundred eighty (180) days prior to commencement of discharges, resulting from the activities listed below, which may result in permit violations. These activities include any facility expansions, production increases, or other planned changes, such as process modifications, in the permitted facility.

General Conditions

G1. Signatory requirements

1. All applications, reports, or information submitted to Ecology must be signed and certified.
   a. In the case of corporations, by a responsible corporate officer. For the purpose of this section, a responsible corporate officer means:
      - A president, secretary, treasurer, or vice-president of the corporation in charge of a principal business function, or any other person who performs similar policy or decision making functions for the corporation, or
      - The manager of one or more manufacturing, production, or operating facilities, provided, the manager is authorized to make management decisions which govern the operation of the regulated facility including having the explicit or implicit duty of making major capital investment recommendations, and initiating and directing other comprehensive measures to assure long-term environmental compliance with environmental laws and regulations; the manager can ensure that the necessary systems are established or actions taken to gather complete and accurate information for permit application requirements; and where authority to sign documents has been assigned or delegated to the manager in accordance with corporate procedures.

   b. In the case of a partnership, by a general partner.

   c. In the case of sole proprietorship, by the proprietor.

   d. In the case of a municipal, state, or other public facility, by either a principal executive officer or ranking elected official.

   Applications for permits for domestic wastewater facilities that are either owned or operated by, or under contract to, a public entity shall be submitted by the public entity.

2. All reports required by this permit and other information requested by Ecology must be signed by a person described above or by a duly authorized representative of that person. A person is a duly authorized representative only if:
   a. The authorization is made in writing by a person described above and submitted to Ecology.

   b. The authorization specifies either an individual or a position having responsibility for the overall operation of the regulated facility, such as the position of plant manager, superintendent, position of equivalent responsibility, or an individual or position having overall responsibility for environmental matters. (A duly authorized representative may thus be either a named individual or any individual occupying a named position.)

3. Changes to authorization. If an authorization under paragraph G1.2, above, is no longer accurate because a different individual or position has responsibility for the overall operation of the facility, a new authorization satisfying the requirements of paragraph G1.2, above, must be submitted to Ecology prior to or together with any reports, information, or applications to be signed by an authorized representative.

4. Certification. Any person signing a document under this section must make the following certification:

   "I certify under penalty of law, that this document and all attachments were prepared under my direction or supervision in accordance with a system designed to assure that qualified personnel properly gathered and evaluated the information submitted. Based on my inquiry of the person or persons who manage the system or those persons directly responsible for gathering information, the information submitted is, to the best of my knowledge and belief, true, accurate, and complete. I am aware that there are significant penalties for submitting false information, including the possibility of fine and imprisonment for knowing violations."

G2. Right of inspection and entry

The Permittee must allow an authorized representative of Ecology, upon the presentation of credentials and such other documents as may be required by law:

1. To enter upon the premises where a discharge is located or where any records must be kept under the terms and conditions of this permit.
2. To have access to and copy, at reasonable times and at reasonable cost, any records required to be kept under the terms and conditions of this permit.
3. To inspect, at reasonable times, any facilities, equipment (including monitoring and control equipment), practices, methods, or operations regulated or required under this permit.
4. To sample or monitor, at reasonable times, any substances or parameters at any location for purposes of assuring permit compliance or as otherwise authorized by the Clean Water Act.

G3. Permit actions

This permit may be modified, revoked and reissued, or terminated either at the request of any interested person (including the Permittee) or upon Ecology's initiative. However, the permit may only be modified, revoked and reissued, or terminated for the reasons specified in 40 CFR 122.62, 40 CFR 122.64 or WAC 173-220-150 according to the procedures of 40 CFR 124.5.

1. The following are causes for terminating this permit during its term, or for denying a permit renewal application:
   a. Violation of any permit term or condition.
   b. Obtaining a permit by misrepresentation or failure to disclose all relevant facts.
   c. A material change in quantity or type of waste disposal.
   d. A determination that the permitted activity endangers human health or the environment, or contributes to water quality standards violations and can only be regulated to acceptable levels by permit modification or termination.

e. A change in any condition that requires either a temporary or permanent reduction, or elimination of any discharge or biosolids use or disposal practice controlled by the permit.

f. Nonpayment of fees assessed pursuant to RCW 90.48.465.

g. Failure or refusal of the Permittee to allow entry as required in RCW 90.48.090.

2. The following are causes for modification but not revocation and reissuance except when the Permittee requests or agrees:

   a. A material change in the condition of the waters of the state.

   b. New information not available at the time of permit issuance that would have justified the application of different permit conditions.

   c. Material and substantial alterations or additions to the permitted facility or activities which occurred after this permit issuance.

   d. Promulgation of new or amended standards or regulations having a direct bearing upon permit conditions, or requiring permit revision.

   e. The Permittee has requested a modification based on other rationale meeting the criteria of 40 CFR Part 122.62.

   f. Ecology has determined that good cause exists for modification of a compliance schedule, and the modification will not violate statutory deadlines.

   g. Incorporation of an approved local pretreatment program into a municipality's permit.

3. The following are causes for modification or alternatively revocation and reissuance:

   a. When cause exists for termination for reasons listed in 1.a through 1.g of this section, and Ecology determines that modification or revocation and reissuance is appropriate.

   b. When Ecology has received notification of a proposed transfer of the permit. A permit may also be modified to reflect a transfer after the effective date of an automatic transfer (General Condition G7) but will not be revoked and reissued after the effective date of the transfer except upon the request of the new Permittee.

G4. Reporting planned changes

The Permittee must, as soon as possible, but no later than one hundred eighty (180) days prior to the proposed changes, give notice to Ecology of planned physical alterations or additions to the permitted facility, production increases, or process modification which will result in:

1. The permitted facility being determined to be a new source pursuant to 40 CFR 122.29(b).

2. A significant change in the nature or an increase in quantity of pollutants discharged.

3. A significant change in the Permittee's biosolids use or disposal practices. Following such notice, and the submittal of a new application or supplement to the existing application, along with required engineering plans and reports, this permit may be modified, or revoked and reissued pursuant to 40 CFR 122.62(a) to specify and limit any pollutants not previously limited. Until such modification is effective, any new or increased discharge in excess of permit limits or not specifically authorized by this permit constitutes a violation.

G5. Plan review required

Prior to constructing or modifying any wastewater control facilities, an engineering report and detailed plans and specifications must be submitted to Ecology for approval in accordance with chapter 173-240 WAC. Engineering reports, plans, and specifications must be submitted at least one hundred eighty (180) days prior to the planned start of construction unless a shorter time is approved by Ecology. Facilities must be constructed and operated in accordance with the approved plans.

G6. Compliance with other laws and statutes

Nothing in this permit excuses the Permittee from compliance with any applicable federal, state, or local statutes, ordinances, or regulations.

G7. Transfer of this permit

In the event of any change in control or ownership of facilities from which the authorized discharge emanate, the Permittee must notify the succeeding owner or controller of the existence of this permit by letter, a copy of which must be forwarded to Ecology.

1. Transfers by Modification

   Except as provided in paragraph (2) below, this permit may be transferred by the Permittee to a new owner or operator only if this permit has been modified or revoked and reissued under 40 CFR 122.62(b)(2), or a minor modification made under 40 CFR 122.63(d), to identify the new Permittee and incorporate such other requirements as may be necessary under the Clean Water Act.

2. Automatic Transfers

   This permit may be automatically transferred to a new Permittee if:

   a. The Permittee notifies Ecology at least thirty (30) days in advance of the proposed transfer date.

   b. The notice includes a written agreement between the existing and new Permittees containing a specific date transfer of permit responsibility, coverage, and liability between them.

   c. Ecology does not notify the existing Permittee and the proposed new Permittee of its intent to modify or revoke and reissue this permit. A modification under this subparagraph may also be minor modification under 40 CFR 122.63. If this notice is not received, the transfer is effective on the date specified in the written agreement.

G8. Reduced production for compliance

The Permittee, in order to maintain compliance with its permit, must control production and/or all discharges upon reduction, loss, failure, or bypass of the treatment facility until the facility is restored or an alternative method of treatment is provided. This requirement applies in the situation where, among other things, the primary source of power of the treatment facility is reduced, lost, or fails.

G9. Removed substances

Collected screenings, grit, solids, sludges, filter backwash, or other pollutants removed in the course of treatment or control of wastewaters must not be resuspended or reintroduced to the final effluent stream for discharge to state waters.

G10. Duty to provide information

The Permittee must submit to Ecology, within a reasonable time, all information which Ecology may request to determine whether cause exists for modifying, revoking and reissuing, or terminating this permit or to determine compliance with this permit. The Permittee must also submit to Ecology upon request, copies of records required to be kept by this permit.

G11. Other requirements of 40 CFR

All other requirements of 40 CFR 122.41 and 122.42 are incorporated in this permit by reference.

G12. Additional monitoring

Ecology may establish specific monitoring requirements in addition to those contained in this permit by administrative order or permit modification.

G13. Payment of fees

The Permittee must submit payment of fees associated with this permit as assessed by Ecology.

G14. Penalties for violating permit conditions

Any person who is found guilty of willfully violating the terms and conditions of this permit is deemed guilty of a crime, and upon conviction thereof shall be punished by a fine of up to ten thousand dollars ($10,000) and costs of prosecution, or by imprisonment in the discretion of the court. Each day upon which a willful violation occurs may be deemed a separate and additional violation.

Any person who violates the terms and conditions of a waste discharge permit may incur, in addition to any other penalty as provided by law, a civil penalty in the amount of up to ten thousand dollars ($10,000) for every such violation. Each and every such violation is a separate and distinct offense, and in case of a continuing violation, every day's continuance is deemed to be a separate and distinct violation.

G15. Upset

Definition – "Upset" means an exceptional incident in which there is unintentional and temporary noncompliance with technology-based permit effluent limits because of factors beyond the reasonable control of the Permittee. An upset does not include noncompliance to the extent caused by operational error, improperly designed treatment facilities, inadequate treatment facilities, lack of preventive maintenance, or careless or improper operation.

An upset constitutes an affirmative defense to an action brought for noncompliance with such technology-based permit effluent limits if the requirements of the following paragraph are met.

A Permittee who wishes to establish the affirmative defense of upset must demonstrate, through properly signed, contemporaneous operating logs, or other relevant evidence that:

1. An upset occurred and that the Permittee can identify the cause(s) of the upset.
2. The permitted facility was being properly operated at the time of the upset.
3. The Permittee submitted notice of the upset as required in Special Condition S3.E.
4. The Permittee complied with any remedial measures required under S3.E of this permit.

In any enforcement action the Permittee seeking to establish the occurrence of an upset has the burden of proof.

G16. Property rights

This permit does not convey any property rights of any sort, or any exclusive privilege.

G17. Duty to comply

The Permittee must comply with all conditions of this permit. Any permit noncompliance constitutes a violation of the Clean Water Act and is grounds for enforcement action; for permit termination, revocation and reissuance, or modification; or denial of a permit renewal application.

G18. Toxic pollutants

The Permittee must comply with effluent standards or prohibitions established under Section 307(a) of the Clean Water Act for toxic pollutants within the time provided in the regulations that establish those standards or prohibitions, even if this permit has not yet been modified to incorporate the requirement.

G19. Penalties for tampering

The Clean Water Act provides that any person who falsifies, tampers with, or knowingly renders inaccurate any monitoring device or method required to be maintained under this permit shall, upon conviction, be punished by a fine of not more than $10,000 per violation, or by imprisonment for not more than two (2) years per violation, or by both. If a conviction of a person is for a violation committed after a first conviction of such person under this condition, punishment shall be a fine of not more than $20,000 per day of violation, or by imprisonment of not more than four (4) years, or by both.

G20. Compliance schedules

Reports of compliance or noncompliance with, or any progress reports on, interim and final requirements contained in any compliance schedule of this permit must be submitted no later than fourteen (14) days following each schedule date.

G21. Service agreement review

The Permittee must submit to Ecology any proposed service agreements and proposed revisions or updates to existing agreements for the operation of any wastewater treatment facility covered by this permit. The review is to ensure consistency with chapters 90.46 and 90.48 RCW as required by RCW 70.150.040(9). In the event that Ecology does not comment within a thirty-day (30) period, the Permittee may assume consistency and proceed with the service agreement or the revised/updated service agreement.

Appendix A

LIST OF POLLUTANTS WITH ANALYTICAL METHODS, DETECTION LIMITS AND QUANTITATION LEVELS

The Permittee must use the specified analytical methods, detection limits (DLs) and quantitation levels (QLs) in the following table for permit and application required monitoring unless:

- Another permit condition specifies other methods, detection levels, or quantitation levels.
- The method used produces measurable results in the sample and EPA has listed it as an EPA-approved method in 40 CFR Part 136, or EPA has granted the laboratory written permission to use the method.
- The Permittee knows that an alternate, less sensitive method (higher DL and QL) from those listed below is sufficient to produce measurable results in their effluent.
- If the Permittee is unable to obtain the required DL and QL due to matrix effects (such as for treatment plant influent or CSO effluent), the Permittee must strive to achieve to lowest possible DL and QL and report the DL and QL in the required report.

If the Permittee uses an alternative method, not specified in the permit and as allowed above, it must report the test method, DL, and QL on the discharge monitoring report or in the required report.

All pollutants that have numeric limits in Section S1 of this permit must be analyzed with the methods specified below. When the permit requires the Permittee to measure the base neutral compounds in the list of priority pollutants, it must measure all of the base neutral pollutants listed in the table below. The list includes EPA required base neutral priority pollutants and several additional polynuclear aromatic hydrocarbons (PAHs). The Water Quality Program added several PAHs to the list of base neutrals below from Ecology's Persistent Bioaccumulative Toxics (PBT) List. It only added those PBT parameters of interest to Appendix A that did not increase the overall cost of analysis unreasonably.

Ecology added this appendix to the permit in order to reduce the number of analytical "non-detects" in permit-required monitoring and to measure effluent concentrations near or below criteria values where possible at a reasonable cost.

CONVENTIONAL PARAMETERS

Pollutant & CAS No. ***(if available)***	**Recommended Analytical Protocol**	**Detection (DL)[1], µg/L unless specified**	**Quantitation Level (QL)[2], µg/L unless specified**
Biochemical Oxygen Demand	SM5210-B		2 mg/L
Total Suspended Solids	SM2540-D		5 mg/L
Total Ammonia (as N)	SM4500-NH3-B and C/D/E/G/H Kerouel & Aminot 1997		0.3 mg/L
Dissolved oxygen	SM4500-OC/OG		0.2 mg/L
Temperature (max. 7-day avg.)	Analog recorder or use micro-recording devices known as thermistors		0.2º C
pH	SM4500-H^+ B	N/A	N/A

NONCONVENTIONAL PARAMETERS

Pollutant & CAS No. (if available)	**Recommended Analytical Protocol**	**Detection (DL)[1], µg/L unless specified**	**Quantitation Level (QL)[2], µg/L unless specified**
Total Alkalinity	SM2320-B		5.0 mg/L as CaCO3
Chlorine, Total Residual	SM4500 Cl G 4500 Cl D/E, Hach 8370		50.0
Fecal Coliform	SM 9221E,9222 B, D	N/A	Specified in method - sample aliquot dependent
Total Coliform	SM 9221B, 9222B,9223B	N/A	Specified in method - sample aliquot dependent
Nitrate + Nitrite Nitrogen (as N)	SM4500-NO3- E/F/H		200
Nitrogen, Total Kjeldahl (as N)	SM4500-N_{org}B/C and SM4500NH_3-B/C/D/EF/G/H EPA 351.2		500
Nitrogen, Total (as N)	SM4500-N-C	50	100
Soluble Reactive Phosphorus (as P)	SM4500- PE/PF	100	100
Phosphorus, Total (as P)	SM 4500 PB followed by SM4500-PE/PF	100	300

Pollutant & CAS No. (if available)	Recommended Analytical Protocol	Detection (DL)[1], µg/L unless specified	Quantitation Level (QL)[2], µg/L unless specified
Oil and Grease (HEM)	1664 A or B	1,400	5,000
Salinity	SM2520-B		3 practical salinity units or scale (PSU or PSS)
Settleable Solids	SM2540 -F		Sample and limit dependent
Sulfate (as mg/L SO_4)	SM4110-B, 4500-SO4 E		7.1 mg/L
Sulfide (as mg/L S)	SM4500-S[2]F/D/E/G		200
Sulfite (as mg/L SO_3)	SM4500-SO3B		2000
Total dissolved solids	SM2540 C		98 mg/L
Total Hardness	SM2340B C, 200.7, 200.8		200 as $CaCO_3$
Aluminum, Total (7429-90-5)	200.8	2.0	10
Barium Total (7440-39-3)	200.8	0.5	2.0
BTEX (benzene +toluene + ethylbenzene + m,o,p xylenes)	EPA SW 846 8021/8260	1	2
Boron Total (7440-42-8)	200.8	2.0	10.0
Cobalt, Total (7440-48-4)	200.8	0.05	0.25
Iron, Total (7439-89-6)	200.7, 200.8	12.5	50
Magnesium, Total (7439-95-4)	200.7, 200.8	10	50
Molybdenum, Total (7439-98-7)	200.8	0.1	0.5
Manganese, Total (7439-96-5)	200.8	0.1	0.5
NWTPH Dx [4]	Ecology NWTPH Dx	250	250
NWTPH Gx [5]	Ecology NWTPH Gx	250	250
Tin, Total (7440-31-5)	200.8	0.3	1.5
Titanium, Total (7440-32-6)	200.8	0.5	2.5

Pollutant & CAS No. (if available)	Recommended Analytical Protocol	Detection (DL)[1], µg/L unless specified	Quantitation Level (QL)[2], µg/L unless specified
METALS, CYANIDE & TOTAL PHENOLS			
Antimony, Total (7440-36-0)	200.8	0.3	1.0
Arsenic, Total (7440-38-2)	200.8	0.1	0.5
Beryllium, Total (7440-41-7)	200.8	0.1	0.5
Cadmium, Total (7440-43-9)	200.8	0.05	0.25
Chromium (hex) dissolved (18540-29-9)	SM3500-Cr B	5	10
Chromium, Total (7440-47-3)	200.8	0.2	1.0
Copper, Total (7440-50-8)	200.8	0.4	2.0
Lead, Total (7439-92-1)	200.8	0.1	0.5
Mercury, Total (7439-97-6)	1631E	0.0002	0.0005
Nickel, Total (7440-02-0)	200.8	0.1	0.5
Selenium, Total (7782-49-2)	200.8	1.0	1.0
Silver, Total (7440-22-4)	200.8	0.04	0.2
Thallium, Total (7440-28-0)	200.8	0.09	0.36
Zinc, Total (7440-66-6)	200.8	0.5	2.5
Cyanide, Total (57-12-5)	335.4, SM4500-CN-C,E	5	10
Cyanide, Weak Acid Dissociable	SM4500-CN I	5	10
Cyanide, Free Amenable to Chlorination (Available Cyanide)	SM4500-CN G	5	10
Phenols, Total	EPA 420.1		50
ACID COMPOUNDS			
2-Chlorophenol (95-57-8)	625	1.0	2.0
2,4-Dichlorophenol (120-83-2)	625	0.5	1.0
2,4-Dimethylphenol (105-67-9)	625	0.5	1.0
4,6-dinitro-o-cresol (534-52-1) (2-methyl-4,6,-dinitrophenol)	625/1625B	2.0	4.0
2,4 dinitrophenol (51-28-5)	625	1.5	3.0
2-Nitrophenol (88-75-5)	625	0.5	1.0
4-nitrophenol (100-02-7)	625	1.0	2.0
Parachlorometa cresol (59-50-7) (4-chloro-3-methylphenol)	625	1.0	2.0
Pentachlorophenol (87-86-5)	625	0.5	1.0

Pollutant & CAS No. (if available)	Recommended Analytical Protocol	Detection (DL)[1], µg/L unless specified	Quantitation Level (QL)[2], µg/L unless specified
Phenol (108-95-2)	625	2.0	4.0
2,4,6-Trichlorophenol (88-06-2)	625	2.0	4.0
VOLATILE COMPOUNDS			
Acrolein (107-02-8)	624	5	10
Acrylonitrile (107-13-1)	624	1.0	2.0
Benzene (71-43-2)	624	1.0	2.0
Bromoform (75-25-2)	624	1.0	2.0
Carbon tetrachloride (56-23-5)	624/601 or SM6230B	1.0	2.0
Chlorobenzene (108-90-7)	624	1.0	2.0
Chloroethane (75-00-3)	624/601	1.0	2.0
2-Chloroethylvinyl Ether (110-75-8)	624	1.0	2.0
Chloroform (67-66-3)	624 or SM6210B	1.0	2.0
Dibromochloromethane (124-48-1)	624	1.0	2.0
1,2-Dichlorobenzene (95-50-1)	624	1.9	7.6
1,3-Dichlorobenzene (541-73-1)	624	1.9	7.6
1,4-Dichlorobenzene (106-46-7)	624	4.4	17.6
Dichlorobromomethane (75-27-4)	624	1.0	2.0
1,1-Dichloroethane (75-34-3)	624	1.0	2.0
1,2-Dichloroethane (107-06-2)	624	1.0	2.0
1,1-Dichloroethylene (75-35-4)	624	1.0	2.0
1,2-Dichloropropane (78-87-5)	624	1.0	2.0
1,3-dichloropropene (mixed isomers) (1,2-dichloropropylene) (542-75-6) [6]	624	1.0	2.0
Ethylbenzene (100-41-4)	624	1.0	2.0
Methyl bromide (74-83-9) (Bromomethane)	624/601	5.0	10.0
Methyl chloride (74-87-3) (Chloromethane)	624	1.0	2.0
Methylene chloride (75-09-2)	624	5.0	10.0
1,1,2,2-Tetrachloroethane (79-34-5)	624	1.9	2.0
Tetrachloroethylene (127-18-4)	624	1.0	2.0
Toluene (108-88-3)	624	1.0	2.0
1,2-Trans-Dichloroethylene (156-60-5) (Ethylene dichloride)	624	1.0	2.0
1,1,1-Trichloroethane (71-55-6)	624	1.0	2.0
1,1,2-Trichloroethane (79-00-5)	624	1.0	2.0
Trichloroethylene (79-01-6)	624	1.0	2.0
Vinyl chloride (75-01-4)	624/SM6200B	1.0	2.0
BASE/NEUTRAL COMPOUNDS (compounds in bold are Ecology PBTs)			
Acenaphthene (83-32-9)	625	0.2	0.4
Acenaphthylene (208-96-8)	625	0.3	0.6
Anthracene (120-12-7)	625	0.3	0.6
Benzidine (92-87-5)	625	20	40
Benzyl butyl phthalate (85-68-7)	625	0.3	0.6
Benzo(*a*)anthracene (56-55-3)	625	0.3	0.6
Benzo(b)fluoranthene (3,4-benzofluoranthene) (205-99-2) [7]	610/625	0.8	1.6
Benzo(j)fluoranthene (205-82-3) [7]	625	0.5	1.0
Benzo(k)fluoranthene (11,12-benzofluoranthene) (207-08-9) [7]	610/625	0.8	1.6
Benzo(r,s,t)pentaphene (189-55-9)	625	1.3	5.0
Benzo(*a*)pyrene (50-32-8)	610/625	0.5	1.0
Benzo(*ghi*)Perylene (191-24-2)	610/625	0.5	1.0
Bis(*2-chloroethoxy)*methane (111-91-1)	625	5.3	21.2
Bis(*2-chloroethyl*)ether (111-44-4)	611/625	0.3	1.0
Bis(*2-chloroisopropyl*)ether (39638-32-9)	625	0.5	1.0
Bis(*2-ethylhexyl*)phthalate (117-81-7)	625	0.3	1.0
4-Bromophenyl phenyl ether (101-55-3)	625	0.3	0.5
2-Chloronaphthalene (91-58-7)	625	0.3	0.6
4-Chlorophenyl phenyl ether (7005-72-3)	625	0.3	0.5

Pollutant & CAS No. (if available)	Recommended Analytical Protocol	Detection (DL)[1], µg/L unless specified	Quantitation Level (QL)[2], µg/L unless specified
Chrysene (218-01-9)	610/625	0.3	0.6
Dibenzo (a,h)acridine (226-36-8)	610M/625M	2.5	10.0
Dibenzo (a,j)acridine (224-42-0)	610M/625M	2.5	10.0
Dibenzo(a-*h*)anthracene (53-70-3)(1,2,5,6-dibenzanthracene)	625	0.8	1.6
Dibenzo(a,e)pyrene (192-65-4)	610M/625M	2.5	10.0
Dibenzo(a,h)pyrene (189-64-0)	625M	2.5	10.0
3,3-Dichlorobenzidine (91-94-1)	605/625	2.0	4.0
Diethyl phthalate (84-66-2)	625	1.9	7.6
Dimethyl phthalate (131-11-3)	625	1.6	6.4
Di-n-butyl phthalate (84-74-2)	625	0.5	1.0
2,4-dinitrotoluene (121-14-2)	609/625	1.0	2.0
2,6-dinitrotoluene (606-20-2)	609/625	1.0	2.0
Di-n-octyl phthalate (117-84-0)	625	0.3	0.6
1,2-Diphenylhydrazine (*as Azobenzene*) (122-66-7)	1625B, 625	5.0	20
Fluoranthene (206-44-0)	625	0.3	0.6
Fluorene (86-73-7)	625	0.3	0.6
Hexachlorobenzene (118-74-1)	612/625	0.3	0.6
Hexachlorobutadiene (87-68-3)	625	0.5	1.0
Hexachlorocyclopentadiene (77-47-4)	1625B/625	2.0	4.0
Hexachloroethane (67-72-1)	625	0.5	1.0
Indeno(*1,2,3-cd*)Pyrene (193-39-5)	610/625	0.5	1.0
Isophorone (78-59-1)	625	0.5	1.0
3-Methyl cholanthrene (56-49-5)	625	2.0	8.0
Naphthalene (91-20-3)	625	0.4	0.75
Nitrobenzene (98-95-3)	625	0.5	1.0
N-Nitrosodimethylamine (62-75-9)	607/625	2.0	4.0
N-Nitrosodi-n-propylamine (621-64-7)	607/625	0.5	1.0
N-Nitrosodiphenylamine (86-30-6)	625	1.0	2.0
Perylene (198-55-0)	625	1.9	7.6
Phenanthrene (85-01-8)	625	0.3	0.6
Pyrene (129-00-0)	625	0.3	0.6
1,2,4-Trichlorobenzene (120-82-1)	625	0.3	0.6
PCBs			
PCB-1242 [8]	608	0.25	0.5
PCB-1254	608	0.25	0.5
PCB-1221	608	0.25	0.5
PCB-1232	608	0.25	0.5
PCB-1248	608	0.25	0.5
PCB-1260	608	0.13	0.5
PCB-1016 [8]	608	0.13	0.5

1. Detection level (DL) or detection limit means the minimum concentration of an analyte (substance) that can be measured and reported with a 99% confidence that the analyte concentration is greater than zero as determined by the procedure given in 40 CFR part 136, Appendix B.
2. Quantitation Level (QL) also known as Minimum Level of Quantitation (ML) – TThe smallest detectable concentration of analyte greater than the Detection Limit (DL) where the accuracy (precision & bias) achieves the objectives of the intended purpose. (Report of the Federal Advisory Committee on Detection and Quantitation Approaches and Uses in Clean Water Act Programs Submitted to the US Environmental Protection Agency December 2007).
3. Soluble Biochemical Oxygen Demand method note: First, filter the sample through a Millipore Nylon filter (or equivalent) - pore size of 0.45-0.50 um (prep all filters by filtering 250 ml of laboratory grade deionized water through the filter and discard). Then, analyze sample as per method 5210-B.
4. NWTPH Dx˙Northwest Total Petroleum Hydrocarbons Diesel Extended Range – see http://www.ecy.wa.gov/biblio/97602.html
5. NWTPH Gx - Northwest Total Petroleum Hydrocarbons Gasoline Extended Range – see http://www.ecy.wa.gov/biblio/97602.html
6. 1, 3-dichloroproylene (mixed isomers) You may report this parameter as two separate parameters: cis-1, 3-dichlorpropropene (10061-01-5) and trans-1, 3-dichloropropene (10061-02-6).
7. Total Benzofluoranthenes – Because Benzo(b)fluoranthene, Benzo(j)fluoranthene and Benzo(k)fluoranthene co-elute you may report these three isomers as total benzofluoranthenes.
8. PCB 1016 & PCB 1242 – You may report these two PCB compounds as one parameter called PCB 1016/1242.

THIS PAGE INTENTIONALLY LEFT BLANK

Fact Sheet for NPDES Permit WA0029581
King County South Wastewater Treatment Plant

July 1, 2015

Purpose of this fact sheet

This fact sheet explains and documents the decisions the Department of Ecology (Ecology) made in drafting the proposed National Pollutant Discharge Elimination System (NPDES) permit for King County's South Wastewater Treatment Plant (South Plant).

This fact sheet complies with Section 173-220-060 of the Washington Administrative Code (WAC), which requires Ecology to prepare a draft permit and accompanying fact sheet for public evaluation before issuing an NPDES permit.

Ecology makes the draft permit and fact sheet available for public review and comment at least thirty (30) days before issuing the final permit. Copies of the fact sheet and draft permit for King County's South Plant, NPDES permit WA0029581, are available for public review and comment from April 16, 2015 until May 17, 2015. For more details on preparing and filing comments about these documents, please see *Appendix A - Public Involvement Information.*

King County reviewed the draft permit and fact sheet for factual accuracy. Ecology corrected any errors or omissions regarding the facility's location, history, wastewater discharges, or receiving water prior to publishing this draft fact sheet for public notice.

After the public comment period closes, Ecology will summarize substantive comments and provide responses to them. Ecology will include the summary and responses to comments in this fact sheet as *Appendix G - Response to Comments*, and publish it when issuing the final NPDES permit. Ecology generally will not revise the rest of the fact sheet. The full document will become part of the legal history contained in the facility's permit file.

Summary

King County owns and operates the South Plant WWTP which treats domestic, commercial, and industrial wastewater using an activated sludge biological treatment process with chlorine disinfection before discharging the treated effluent to central Puget Sound off the Duwamish Head in West Seattle. Ecology issued the previous permit for this facility on September 30, 2009. The proposed permit contains the same effluent limits for total suspended solids, fecal coliform, pH, and chlorine as the permit issued in 2009. At the request of King County, the proposed permit replaces BOD_5 (5-day biological oxygen demand) effluent limits with equivalent $CBOD_5$ (5-day carbonaceous biological oxygen demand) limits. The proposed permit also reduces fecal coliform monitoring from 7 times each week to 5 times each week as supported by statistical analysis. The proposed permit does not include any other significant changes from the previous permit.

Table of Contents

I. Introduction ***4***
II. Background Information ***5***
A. Facility description 6
History *6*
Treatment processes *7*
Discharge outfalls *10*
Collection system status *12*
Capacity analysis *13*
Solid wastes/Residual solids *14*
Reuse - Secondary treated effluent *14*
B. Description of the receiving water 14
C. Wastewater influent characterization 15
D. Wastewater effluent characterization 15
Whole effluent toxicity testing *17*
E. Sediment characterization 17
F. Summary of compliance with previous permit issued 18
G. State environmental policy act (SEPA) compliance 19
III. Proposed Permit Limits ***19***
A. Design criteria 19
B. Technology-based effluent limits 20
C. Surface water quality-based effluent limits 21
Numerical criteria for the protection of aquatic life and recreation *21*
Numerical criteria for the protection of human health *21*
Narrative criteria *22*
Antidegradation *22*
Mixing zones *23*
D. Designated uses and surface water quality criteria 29
Puget Sound Outfall No. 001 (marine) *29*
Green River Discharge (freshwater): *30*
E. Water quality impairments 30
F. Evaluation of surface water quality-based effluent limits for narrative criteria 31
G. Evaluation of surface water quality-based effluent limits for numeric criteria 31
Puget Sound Outfall No. 001 ..... *31*
Green River Outfall No. 002 (maintenance only) *35*
H. Human health 36
I. Sediment quality 36
J. Whole effluent toxicity 37
K. Groundwater quality limits 38
L. Comparison of effluent limits with the previous permit 38
IV. Monitoring Requirements ***38***
A. Wastewater monitoring 39
B. Lab accreditation 39
V. Other Permit Conditions ***40***
A. Reporting and record keeping 40
B. Prevention of facility overloading 40
C. Operation and maintenance 41

D. Pretreatment 41
Duty to enforce discharge prohibitions *41*
E. Solid wastes 42
F. Spill plan 42
G. General conditions 42
VI. Permit Issuance Procedures 42
A. Permit modifications 42
B. Proposed permit issuance 43
VII. References for Text and Appendices 43
Appendix A — Public Involvement Information 44
Appendix B — Your Right to Appeal 45
Appendix C — Glossary 46
Appendix D — Facility Data 53
Appendix E — Technical Calculations 62
Appendix F — Significant Industrial Users 78
Appendix G — Response to Comments 79

List of Tables

Table 1. General Facility Information 5
Table 2. Agencies Tributary to South Plant 12
Table 3. Current and Projected (2009-2014) Influent Flow and Loadings 13
Table 4. Ambient Background Data [1] 15
Table 5. Wastewater Influent Characterization 15
Table 6. Wastewater Effluent Characterization 16
Table 7. Design Criteria for King County South Wastewater Treatment Plant 20
Table 8. Technology-based Limits 20
Table 9. Technology-based Mass Limits 21
Table 10. Critical Conditions Used to Model the Puget Sound Outfall 001 25
Table 11. Critical Conditions Used to Model the Green River Outfall 002 25
Table 12. Marine Aquatic Life Uses and Associated Criteria 29
Table 13. Recreational Uses 29
Table 14. Aquatic Life Uses & Associated Criteria 30
Table 15. Recreational Uses and Associated Criteria 30
Table 16. Dilution Factors 32
Table 17. Dilution Factors - Green River Outfall No. 002 35
Table 18. Discharge flow restrictions to achieve required dilution in the Green River 35
Table 19. Comparison of Previous and Proposed Effluent Limits for Outfall 001 38
Table 20. Lab Accredited Parameters 40

List of Figures

Figure 1. Facility Location Map 6
Figure 2. South Wastewater Treatment Plant – Simplified Process Flow Schematic 8
Figure 3. South Plant marine outfall location. 10
Figure 4. South Plant emergency backup Green River outfall location. 11
Figure 5. South Plant's Outfall 001 Mixing Zone Diagram. 28
Figure 6. South Plant's Outfall 002 Mixing Zone Diagram (Green River) 28

I. Introduction

The Federal Clean Water Act (FCWA, 1972, and later amendments in 1977, 1981, and 1987) established water quality goals for the navigable (surface) waters of the United States. One mechanism for achieving the goals of the Clean Water Act is the National Pollutant Discharge Elimination System (NPDES), administered by the federal Environmental Protection Agency (EPA). The EPA authorized the state of Washington to manage the NPDES permit program in our state. Our state legislature accepted the delegation and assigned the power and duty for conducting NPDES permitting and enforcement to Ecology. The Legislature defined Ecology's authority and obligations for the wastewater discharge permit program in 90.48 RCW (Revised Code of Washington).

The following regulations apply to domestic wastewater NPDES permits:

- Procedures Ecology follows for issuing NPDES permits (chapter 173-220 WAC).
- Technical criteria for discharges from municipal wastewater treatment facilities (chapter 173-221 WAC).
- Water quality criteria for surface waters (chapter 173-201A WAC).
- Water quality criteria for groundwaters (chapter 173-200 WAC).
- Whole effluent toxicity testing and limits (chapter 173-205 WAC).
- Sediment management standards (chapter 173-204 WAC).
- Submission of plans and reports for construction of wastewater facilities (chapter 173-240 WAC).

These rules require any treatment facility owner/operator to obtain an NPDES permit before discharging wastewater to state waters. They also help define the basis for limits on each discharge and for requirements imposed by the permit.

Under the NPDES permit program and in response to a complete and accepted permit application, Ecology must prepare a draft permit and accompanying fact sheet, and make them available for public review before final issuance. Ecology must also publish an announcement (public notice) telling people where they can read the draft permit, and where to send their comments, during a period of thirty days (WAC 173-220-050). (See *Appendix A - Public Involvement Information* for more detail about the public notice and comment procedures). After the public comment period ends, Ecology may make changes to the draft NPDES permit in response to comments. Ecology will summarize the responses to comments and any changes to the permit in *Appendix G*.

II. Background Information

Table 1. General Facility Information

Facility Information	
Applicant	King County Department of Natural Resources and Parks Wastewater Treatment Division 201 S. Jackson Street, MS KSC-NR-0500 Seattle, WA 98104-3855
Facility Name and Address	King County South Wastewater Treatment Plant 1200 Monster Road SW Renton, WA 98057
Contact at Facility	Process Control Supervisor, (206) 263-1810
Responsible Official	Christie True Director, King County DNRP 201 S. Jackson Street, Seattle, WA 98104
Type of Treatment	Secondary Treatment, Activated Sludge
Facility Location (NAD83/WGS84 reference datum)	Latitude: 47.467683 Longitude: -122.240323
Discharge Waterbody Name and Location (NAD83/WGS84 reference datum)	Puget Sound *North Diffuser* *South Diffuser* Latitude: 47.602778˚ 47.599722˚ Longitude: -122.429000˚ -122.429028˚ Emergency/Maintenance (Green River) Latitude: 47.470750˚ Longitude: -122.241861˚

Permit Status	
Renewal Date of Previous Permit	September 30, 2009
Application for Permit Renewal Submittal Date	September 25, 2013
Date of Ecology Acceptance of Application	October 15, 2013

Inspection Status	
Date of Last Sampling Inspection	April 14-15, 2008
Date of Last Non-sampling Inspection Date	January 13, 2015

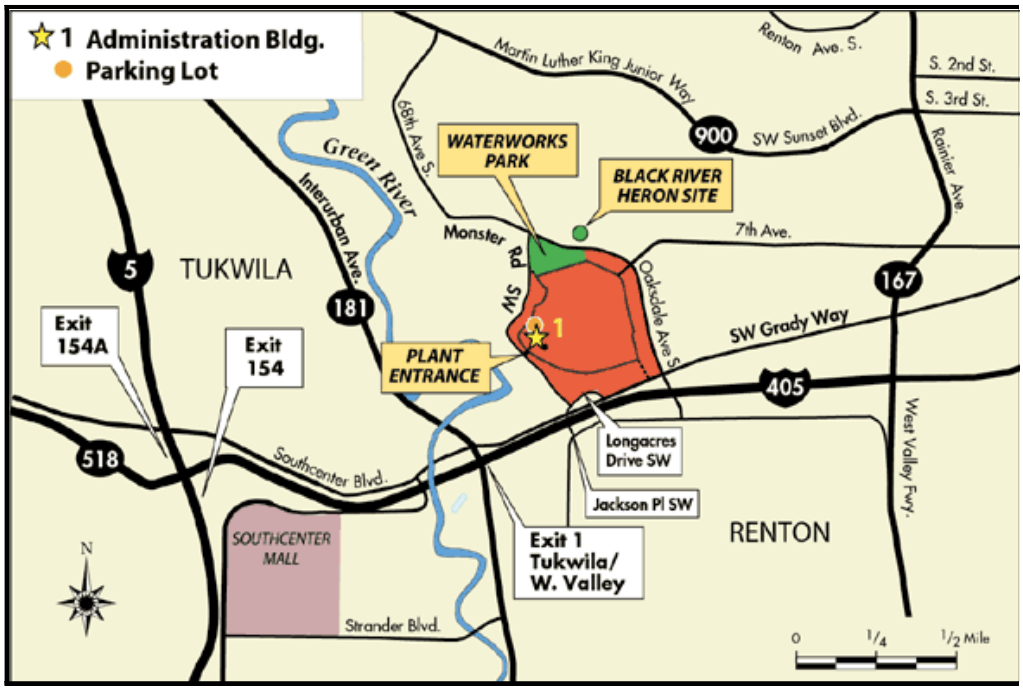

Figure 1. Facility Location Map

A. Facility description

History

In 1958, voters in Seattle and King County created Metro, an agency charged with creating a regional wastewater conveyance and treatment system. The South Wastewater Treatment Plant located in Renton is often referred to by County staff as the South Treatment Plant (South Plant or STP). Metro completed construction of the plant in 1965. The original plant had the capacity to treat 24 million gallons per day (MGD) of wastewater to secondary treatment levels using an activated sludge biological process. The third, and latest, expansion of the plant began in 1991 and was considered complete in 2000-2001. This last upgrade brings the plant design capacity to 144 MGD maximum month flow. In 2003, the County replaced the 90-ton railcar chlorine system with an interim sodium hypochlorite (12.5% NaOCl solution) disinfection facility because the City of Renton required the County to remove gaseous chlorine from the site. The County completed construction of a permanent 12.5% sodium hypochlorite disinfection facility in early 2010. In 2005, the County expanded the solids dewatering facility by replacing eight belt filter presses (50-gpm each) with three high-solids centrifuges (325-gpm capacity each).

South Plant is designated as an EPA major facility due to the magnitude of its daily discharge volume.

Treatment processes

Figure 2 displays the flow schematic for the South Plant facility.

Headworks - Under normal flow conditions, the raw sewage flows through four bar screens with 3/8" openings for rags and plastics removal. Flows exceeding approximately 150 MGD are screened with barscreens with 7/16 inch openings. The screenings are conveyed down a trough to the grinder pumps, then cleaned and dewatered in preparation for disposal at a landfill. The raw (influent) pumps lift the wastewater 40 feet to a division channel providing for gravity flow through the remaining treatment processes. The wastewater flows through the aerated grit channels to allow for grit to settle out. The grit is pumped to the cyclones, discharged to the classifiers, and then into dumpsters.

Primary Treatment - The division channel splits flow between a north set of 4 primary clarifiers and south set of 8 primary clarifiers. The north clarifiers use return flights and tipping troughs to capture and remove scum and grease. The south clarifiers use surface water spray to move scum and grease to a helical screw located at the upstream end of the tank; the return flights stay submerged on the south clarifiers. Primary clarifier effluent overflows via launders with submerged orifices. The launders saw-tooth weirs allow it to handle higher flows. Primary effluent flows by gravity to the aeration tanks. Primary sludge is continuously pumped from the bottom of the clarifiers to the dissolved air flotation tanks (DAFTs) for further treatment.

Secondary Treatment - Secondary treatment is accomplished using an activated sludge process. There are 4 aeration basins with fine bubble diffusers. The first part of each aeration basin is anaerobic when operating in the selector mode. Operators adjust the dissolved oxygen and sludge age to achieve a settable sludge. The wastewater flows from the aeration basins to the mixed liquor channel then on to the secondary clarifiers. There are 6 secondary clarifier pods each with 4 clarifiers for a total of 24 secondary clarifiers. Each pod has an effluent control center (ECC) where flow and turbidity are monitored. Pumps return the solids that settle out in the secondary clarifiers back to the aeration basins as return activated sludge (RAS) or pump them to solids handling as waste activated sludge (WAS).

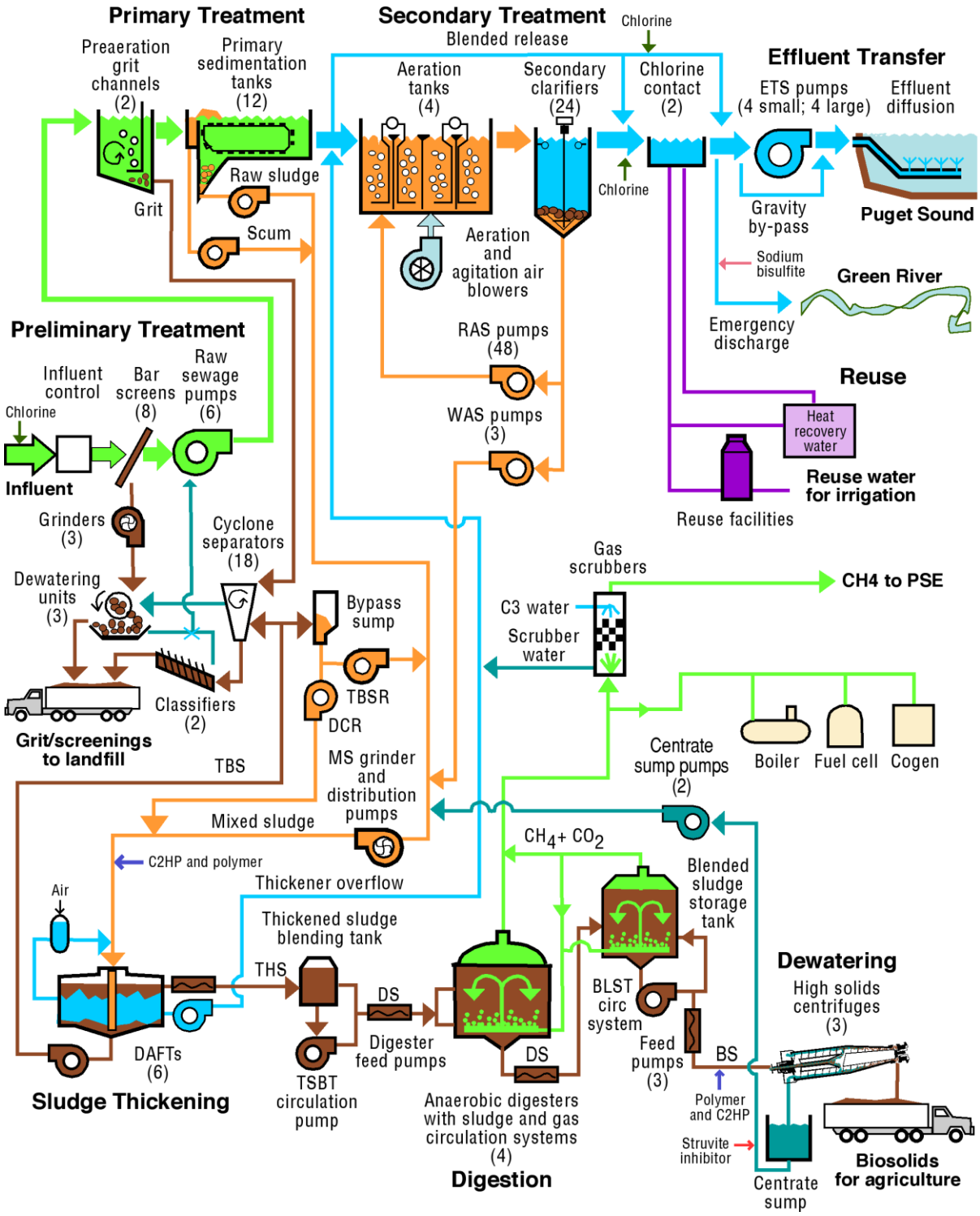

Figure 2. South Wastewater Treatment Plant – Simplified Process Flow Schematic

Disinfection and Effluent Pumping - Beginning in June 2003, the facility converted to sodium hypochlorite for disinfection in order to eliminate handling of chlorine gas. Hypochlorite is added at several locations along the chlorine contact channels. The chlorinated effluent flows through the chlorine contact channel to the forebay tank located before the effluent pumps. The effluent pumps discharge the treated wastewater from the forebay to the plant's Puget Sound outfall located 12 miles away off of Alki Point.

Solids - Solids from the primary clarifiers, WAS from the secondary clarifiers, and scum are pumped to the DAFTs. The DAFTs (4 older tanks, 2 new larger tanks) thicken the sludge. Inside these tanks, a mixture of sludge, polymer, and air form a thick layer of sludge that floats to the surface. A scraper arm controls the thickness of the floating sludge blanket and moves solids out of the DAFT to the Thickened Sludge Blending Tank. The water layer below the sludge blanket in the DAFT is pumped to the aeration tanks. The thin sludge layer that forms on the bottom of the DAFT is pumped to grit cyclones for degritting and sent back to the DAFTS for reprocessing.

The contents of the thickened sludge blending tank are pumped on level control to 1 of 4 anaerobic digesters. Operators collect daily process control samples of the digester sludge. The digested sludge is transferred to the 5th digester that serves as the blended sludge storage tank. Polymer is added as a coagulant to the sludge as it is pumped from the blended sludge storage tanks to the centrifuges. The centrifuges produce a biosolids product that is about 20-25% solids. The biosolids are hauled to beneficial reuse sites in Eastern Washington (agriculture applications), and Western Washington (forest applications and commercial composting).

Odor Control - Odor control consists of a couple different air scrubbing systems. Chemical scrubbers use caustic and hypochlorite solutions to control odors from the secondary treatment area, the primary treatment area, the sludge thickeners, and the dewatering area. Carbon scrubbers control odors in the sludge thickening and dewatering areas. In addition, the facility maintains a biofilter to control odors on the influent interceptor collection system.

Emergency Backup Power - The facility's two independent power feeders to the plant provide redundancy. In addition, an emergency generator powers essential services, for example, lighting, alarms, security, etc., although it is not sufficient to power the influent pumps or other plant processes. An 8-Mega Watt (MW) cogeneration facility is also located on-site. It consists of two 3.5-MW gas turbine generators and a 1-MW steam turbine generator. The cogeneration facility is fueled by pipeline natural gas or scrubbed digester gas produced at the South Plant.

Industrial and Commercial Users - Ecology delegated King County the authority to run a Pretreatment Program. King County's South Plant application for permit renewal lists 53 industrial users that discharge to the collection system. There are 28 non-categorical Significant Industrial Users (SIUs) and 25 Categorical Industrial Users (CIUs). Please refer to Appendix F for a list of the industrial users.

Discharge outfalls

Puget Sound Outfall 001

Figure 3 shows the location South Plant's marine outfall. Secondary treated and disinfected effluent is discharged from the facility via a 12-mile long 8-foot diameter transfer line. The outfall consists of two pipelines, each extending over 10,000 feet northwest into the Puget Sound from Duwamish Head. For nearshore protection, the initial portion is supported by legs and the remainder of the outfall rests along the seafloor in a shallow trench. An outfall junction structure is located at the end of the effluent transfer system (ETS) force main just west of Luna Park in West Seattle. The structure contains a 64-inch diameter manifold connecting the 96-inch ETS to the two 64-inch diameter outfall lines. The diffuser sections are on the final 500-ft of each leg. Each diffuser has 168-sweep radius diffuser ports (a total of 336 diffuser ports), each 14 inches long and 4 inches in diameter. The diffusers are staggered side-to-side every 3 feet. Each diffuser port is made of a copper-nickel alloy to inhibit bio-fouling. The diffusers are about 625 feet deep as measured during MLLW conditions.

The County inspected the marine outfall in 2004-2005 and 2011. The extensive inspections concluded that all external components of the outfalls and associated structures appeared in good condition with no evidence of damage or need for remedial action. The diffusers were flowing freely. The 2011 inspection report noted that sediments have buried significant portions of both pipelines and that there is a minor suspension between stations 61 and 62 on pipeline B.

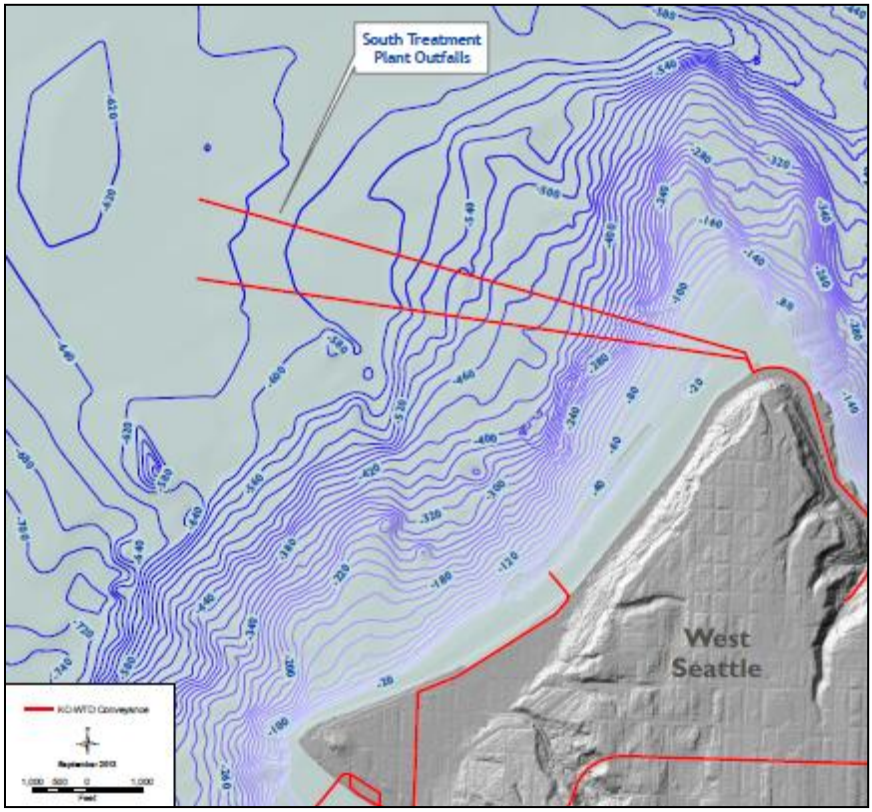

Figure 3. South Plant marine outfall location.

Green River Outfall (Maintenance & Emergency Purposes Only)

Figure 4 shows the Green River outfall location. This outfall was the South Plant's sole discharge point prior to the construction of the marine outfall in 1987. The County increased the firm capacity (total capacity with one pump out of service) of the effluent transfer system (ETS), which carries flow to the marine outfall, to 325 MGD with the pumping system upgrade in 1999. With all pumps running, the predicted capacity is 340-360 MGD (depending on the tide). The proposed permit authorizes the treatment plant to discharge to the Green River for maintenance purposes only.

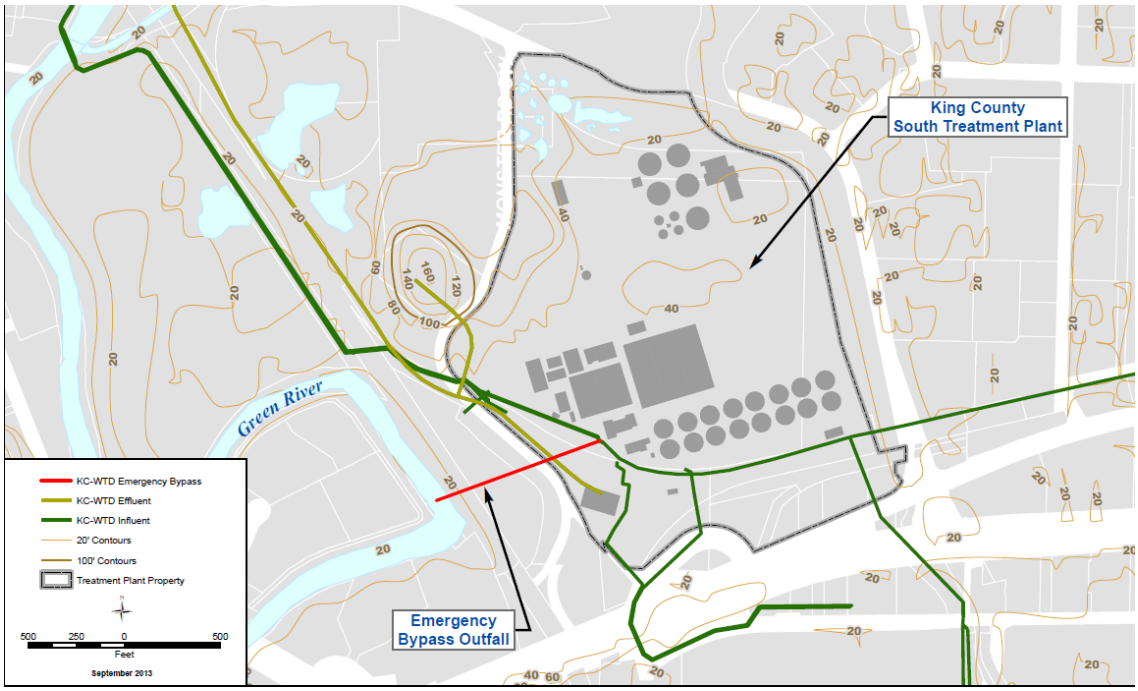

Figure 4. South Plant emergency backup Green River outfall location.

An emergency discharge is an unplanned and unavoidable discharge which is necessary to prevent sewage overflows or damage to the plant. Emergency discharges could occur during a severe, heavy rain event when the flow exceeds the capacity of the ETS, or in the extreme event that the ETS loses significant capacity due to multiple equipment failures or power failure.

Maintenance discharges are performed periodically to ensure that the outfall will function normally during an emergency event. During a maintenance discharge, the County uses a sufficient flow rate of disinfected and dechlorinated effluent to flush sediment from the diffuser ports. The proposed permit specifically authorizes discharges to the Green River for maintenance purposes.

The diffuser is a 12-foot by 12-foot structure that is 44 feet long extending into the river. There are 8 discharge ports located on the downstream side of the diffuser. The top of each port is at the elevation of the river bottom.

During the last permit cycle, King County conducted one maintenance discharge on the Green River outfall. The County timed the discharge to minimize impacts during fish passage windows. During the discharge the County monitored effluent quality and the impacts to the receiving water 300' downstream as required by their permit.

Collection system status

The South Plant serves an area of 152 square miles. King County owns and operates the major sewer interceptors and pump stations that carry the wastewater to the treatment plant. The component agencies, listed in Table 2 individually own, operate, and maintain the pipelines and other conveyance facilities that carry wastewater to the County's interceptors. Wastewater is conveyed to the treatment plant via three interceptors, the Tukwila Interceptor, the South Interceptor, and the Eastside Interceptor and by the 20 pump stations in the system. The County monitors and controls the collection system using a SCADA (Supervisory Control and Data Acquisition) system located at South Plant.

The South Plant serves 25 jurisdictions and utility districts as noted in the County's 2013 NPDES permit application and as listed in Table 2.

Table 2. Agencies Tributary to South Plant

Cities	Sewer/Utility Districts	Other
Algona	Cedar River Water And Sewer District	Muckleshoot Indian Tribe
Auburn	Coal Creek Utility District	Sammamish State Park
Bellevue	Lakehaven Utility District	Shorewood Apartments
Black Diamond	Northeast Sammamish Sewer And Water District	
Issaquah	Northshore Utility District	
Kent	Sammamish Plateau Water And Sewer District	
Kirkland	Seattle Public Utilities	
Mercer Island	Skyway Water And Sewer District	
Pacific	Soos Creek Water And Sewer District	
Redmond	Valley View Sewer District	
Renton		
Tukwila		

Inflow and Infiltration - King County created a Regional Infiltration and Inflow (I/I) Control Program in 1999 as part of the Regional Wastewater Services Plan (RWSP) to explore the feasibility of regional I/I control. The purpose of the program is to reduce the amount of peak wet weather flow entering the County's wastewater conveyance system when it is cost-effective to do so. Reduction of I/I in the system may prevent sanitary sewer overflows and decrease the costs of conveying and treating extraneous flows.

In response to the RWSP I/I Control Program policies, County staff, working in a consensus-based approach with the local sewer agencies, conducted a comprehensive 6-year, $41 million, I/I control study. The study began in 2000 and culminated with the County Executive's recommendation for a regional I/I control program. The following work was completed as part of this study:

- Levels of I/I for each local agency tributary to the regional system were defined through extensive flow monitoring and modeling program (2001-2002).
- 10 pilot projects were selected and constructed in 12 local agency jurisdictions to demonstrate the effectiveness of collection system rehabilitation projects and to test various technologies and gain cost information (2003-2004).

- Final draft model standards, procedures, policies, and guidelines were developed (October 2004) for use by local agencies to reduce I/I in their systems.
- A thorough benefit-cost analysis was conducted to determine the cost-effectiveness of I/I reduction (November 2005).
- A long-term regional I/I control plan was developed; approved by the King County Council in May 2006.
- King County worked with the local sewer agencies to conduct an I/I reduction feasibility analysis and selected three initial I/I reduction project areas (2007-2009).
- The Skyway Water and Sewer District I/I reduction project (2010-2014).

For more information see the full report on the County's I/I Program website.

CSO Status - All component agencies that provide flow to South Plant are separated sanitary systems with the exception of a small portion (approximately 4%) of the Seattle system that is a combined system. South Plant will continue to treat a portion of the flow from the Henderson CSO and Martin Luther King (MLK) diversion structure combined systems during the term of this permit. During heavy rain events, King County's West Point WWTP treats some of the flow. The MLK/Henderson/Norfolk project provides a tunnel for the storage and primary sedimentation of flows from Henderson, Martin Luther King, and Norfolk CSOs. During small rain events, the tunnel stores CSO flows for transfer to the South Plant for secondary treatment. During the largest storms and when the tunnel fills, any flows that exceed tunnel storage capacity are treated, disinfected, and discharged through the Norfolk CSO (which is permitted under King County's West Point WWTP permit).

Capacity analysis

With its application for permit renewal, King County submitted a *Flow and Waste Load Assessment*. Table 3 summarizes South Plant's design capacity and its current and projected flow and loadings through 2018. The County projected that all of the flows and loadings between 2014 and 2018 will be below South Plant's current design capacity assuming an average growth rate of 1% per annum. When Brightwater WWTP started operation in November 2012, South Plant's annual average flow decreased about 8 mgd and its wet weather season flow decreased about 16 mgd, as expected.

Table 3. Current and Projected (2009-2014) Influent Flow and Loadings

Parameter	Design Capacity	2009-2014 Max [1]	Projected 2018 [2]
Flow Average Wet Weather, MGD	115	100	82
Flow Max Month, MGD	144	108	112
BOD Max Month Load, lbs/day	251,000	222,000 [3] 185,000 [2,4]	195,000
TSS Max Month Load, lbs/day	235,000	218,000 [3] 180,000 [2,4]	185.000

[1] Source: DMR data reported by King County
[2] Source: King County's *2014 Annual Flow and Wasteload Assessment Memorandum.*
[3] Values are artificially inflated due to leaky seals in secondary clarifier.
[4] Values estimated using solids mass balance.

Facility Bypasses - King County's South Plant historically utilized flow blending to manage peak flow events. The South Plant had no blending events between February 2009 and September 2014; a significant reduction from the twelve that occurred between October 2004 and February 2009. The County initiates blending only when solids started to wash out of the secondary process or when secondary flows are notably above 190-200 MGD. According to King County operators, blending reduces washout of secondary solids from the secondary clarifiers. This permit does not authorize the use of flow blending, but rather relies on the bypass provision in Special Condition S5 of the permit to address any bypassing of treatment units.

Solid wastes/Residual solids

The treatment facilities remove solids during the treatment of the wastewater at the headworks (grit and screenings), and at the primary and secondary clarifiers, in addition to incidental solids (rags, scum, and other debris) removed as part of the routine maintenance of the equipment. Grit, rags, and screenings are drained and disposed of as solid waste at a landfill. Primary and waste secondary sludge are co-thickened in the dissolved air flotation tanks. The thickened sludge is fed to the anaerobic, mesophilic digesters. The County blends and stores digested sludge in a tank then dewaters the sludge using centrifuges to produce biosolids. The biosolids are applied to forest and agriculture lands under a permit from the King County Health Department.

The County periodically analyzes the biosolids for various chemical contaminants. Regulatory and compliance issues regarding biosolids are managed by the Department of Ecology's Biosolids Program.

Reuse - Secondary treated effluent

A separate state Reclaimed Water Permit covers the existing South Plant water reclamation facility including the distribution of the Class A water it produces.

Condition S12 of the proposed NPDES permit authorizes the County to distribute effluent from the ETS to Boeing for a specifically-identified use. King County is permitted to enlist other customers along the ETS corridor for noncontact use of the secondary treated effluent, with return to the ETS for discharge at the Puget Sound Outfall, provided the County receives written approval from both Ecology and the Department of Health. Ecology approval is required for each application of direct reuse to ensure that such use does not cause a violation of the state water quality standards. The intent of the NPDES permit is to allow the Permittee flexibility to provide noncontact reuse water to customers with sufficient safeguards to ensure that the water quality standards are not violated.

At the writing of this permit, King County had one customer using treated secondary effluent in this manner. The Boeing Company uses secondary treated effluent in a closed-loop chiller system primarily during the summer months at the Boeing Training Center in Renton.

B. Description of the receiving water

The South Plant WWTP discharges to the Puget Sound. Ecology used ambient data from sampling station LSNT01 in King County's 2013 receiving water study to assess compliance with water quality standards. This sampling station is located approximately five miles south of the South Plant outfall (47.533333˚, -121.433333˚).

Table 4. Ambient Background Data [1]

Parameter	Value
Temperature (highest annual 1-DADMax)	12.7^{o} C (at 1.3 m below surface)
pH (minimum / maximum)	7.4 / 8.0 std units
Salinity (minimum)	27.7 pss
Alkalinity (10th percentile)	97.5 mg/L $CaCO_3$
Dissolved Oxygen (10th percentile)	5.8 mg/L
Total Ammonia (max)	0.085 mg/L as N
Fecal Coliform (max)	1 / 100 mL
TSS (max)	7.5 mg/L
Antimony (90th percentile), Dissolved / Total	0.172 / 0.178 µg/L
Arsenic (90th percentile), Dissolved / Total	1.450 / 1.450 µg/L
Cadmium (90th percentile), Dissolved / Total	0.073 / 0.081 µg/L
Chromium (90th percentile), Dissolved / Total [2]	0.150 / 0.145 µg/L
Copper (90th percentile), Dissolved / Total	0.354 / 0.428 µg/L
Lead (90th percentile), Dissolved / Total	0.006 / 0.045 µg/L
Mercury (90th percentile), Dissolved / Total	0.00020 / 0.00038 µg/L
Nickel (90th percentile), Dissolved / Total	0.427 / 0.476 µg/L
Silver (90th percentile), Dissolved / Total	0.026 / 0.029 µg/L
Zinc (90th percentile), Dissolved / Total [2]	0.605 / 0.538 µg/L

[1] Data source: *King County Receiving Water Characterization Study - Final Report*, June 2013.

[2] Data reported in 2013 report shows 90th percentile of dissolved fraction as slightly larger than total concentration. This discrepancy is likely within the precision of the analytical method.

C. Wastewater influent characterization

King County reported the concentration of influent pollutants in discharge monitoring reports. The influent wastewater is characterized as shown in Table 5.

Table 5. Wastewater Influent Characterization

Parameter	Units	# of Samples	Average Value	Maximum Value
BOD_5	mg/L	≈1000	269	612
	lbs/day	≈1000	180,387	394,229
TSS	mg/L	≈1000	262	834
	lbs/day	≈1000	175,762	461,223

D. Wastewater effluent characterization

King County reported the concentration of pollutants in the discharge in their permit application and in discharge monitoring reports. The tabulated data represents the quality of the wastewater effluent discharged from November 2009 through July 2014. The wastewater effluent is characterized as listed in Table 6.

Table 6. Wastewater Effluent Characterization

Parameter	Units	# of Samples	Average Monthly Averaqe	Maximum Monthly Average
BOD_5	mg/L	≈1000	17	28
	lbs/day	≈1000	10,734	19,456
TSS	mg/L	≈1000	11	20
	lbs/day	≈1000	7,425	14,755
			Maximum Monthly Geometric Mean	**Maximum Weekly Geometric Mean**
Fecal Coliforms	#/100 mL	≈1800	159	272
			Minimum Value	**Maximum Value**
pH	Standard units	*Continuous monitoring*	6.5	9.0
Temperature – 1DADMax	Deg C	≈1800	95th percentile = 22.3	
			Maximum Monthly Average	**Maximum Daily Maximum**
Chlorine, Total Residual	µg/L	Continuous	110	360
Ammonia, as N	mg/L	≈60	38	45
	lbs/day	≈60	21,500	28,500
Total Kjeldahl Nitrogen, as N	mg/L	≈60	42	50
Nitrate + Nitrite, as N	mg/L	≈60	16	18
Phosphorus, total, as P	mg/L	≈60	4.6	6.7
Phosphate, ortho, as P	mg/L	≈60	3.9	5.4

Detected Chemicals	Units	# of Samples	Minimum	Maximum	95th Percentile	50th Percentile	cv
1,4-Dichlorobenzene	ug/L	23	0.50	4.32	4.26	0.50	1.03
2,4,6-Trichlorophenol	ug/L	22	0.25	1.20	1.20	0.95	0.33
2,4-Dichlorophenol	ug/L	22	0.12	1.67	1.66	0.28	0.91
Antimony, Total	ug/L	29	0.15	0.64	0.63	0.42	0.28
Arsenic, Total	ug/L	29	1.10	1.75	1.74	1.38	0.12
Bis(2-Ethylhexyl) Phthalate	ug/L	22	0.33	5.10	3.23	1.37	0.62
Cadmium, Total	ug/L	29	0.03	0.11	0.05	0.03	0.61
Chloroform	ug/L	23	0.50	1.70	1.39	0.50	0.50
Chromium, Total	ug/L	29	0.45	0.97	0.90	0.57	0.22
Copper, Total	ug/L	29	5.62	13.80	13.28	9.73	0.24
Cyanide, Weak & Diss.	ug/L	28	2.5	18.4	12.1	2.5	0.91
Diethyl Phthalate	ug/L	22	0.07	0.57	0.50	0.24	0.52
Lead, Total	ug/L	29	0.25	1.63	0.90	0.34	0.66
Mercury	ug/L	29	0.0027	0.0068	0.0065	0.0051	0.21
Nickel, Total	ug/L	29	1.90	3.53	3.15	2.32	0.17
Nonylphenol Isomer	ug/L	2	3.02	3.26	--	--	0.05
Silver, Total	ug/L	29	0.02	0.14	0.13	0.07	0.51
Tetrachloroethylene	ug/L	23	0.50	1.40	1.22	0.50	0.43
Zinc, Total	ug/L	29	23.00	44.60	43.72	31.20	0.18

Whole effluent toxicity testing

The County conducted acute toxicity tests in August 2012 and February 2013, and chronic toxicity tests in October 2012 and February 2013. Acute toxicity tests were conducted with Daphnia pulex (water flea) and Pimephales promelas (fathead minnow). Chronic toxicity tests were conducted with Atlantic Mysid and topsmelt. Please refer to Appendix D for toxicity test results.

For acute toxicity, the performance standard is the median survival in 100% effluent being equal to or greater than 80% and no individual test result showing less than 65% survival in 100% effluent. For the tests conducted in 2012 and 2013, the lowest survival in 100% effluent was 95%.

For chronic toxicity, the performance standard is no chronic toxicity test demonstrating a statistically-significant difference in response between the control and a test concentration equal to the acute critical effluent concentration (ACEC). South WWTP had no chronic toxicity near the previous ACEC of 0.54% effluent in any recent test.

Since the discharge met the performance standards for toxicity in the previous permit cycle, the proposed permit does not include WET limits but includes WET monitoring as required for permit renewal.

E. Sediment characterization

Ecology has promulgated sediment management standards under Chapter 173-204 WAC. The sediment management standards contain numeric chemical and biological criteria that protect benthic organisms that live in the sediment of the marine waters of Puget Sound. These standards state that Ecology may require permitted facilities to evaluate the potential for the discharge to cause a violation of applicable standards.

Between 1994 and 1997, King County performed annual sediment sampling from 0 to 2 cm depth at locations near the two outfalls (EIM Data User Study ID RENT9497). In October 1997, the County measured concentrations of hexachlorobenzene at three locations (RT700NS, RT625ND, RT625SD) that exceeded the sediment quality standards numeric criteria. In October 1995, one location (LSDS02) exceeded CSL numeric criteria for benzoic acid. One sample, RT625SD, had bis(2-ethylhexyl) phthalate concentration of 42 ppm, compared to the SQS criteria of 47 ppm OC (total organic carbon normalized). For four chemicals (1,2,4-trichlorobenzene, benzyl alcohol, hexachlorobenzene, and hexachlorobutadiene) many of the samples had non-detect concentrations with reported detection limits above the sediment quality standard numeric criteria.

In October 1999, King County performed sediment sampling from 0 to 2 cm depth at 13 sample locations near the two outfalls (EIM Data User Study ID RENT99). Sediment samples were analyzed for the 47 chemicals with numeric criteria in the sediment management standards. The County did not detect the following four chemicals (2,4-dimethyl phenol, 2-methylphenol, benzyl alcohol, and hexachlorobutadiene), but most of the samples had reported detection limits above the sediment quality standards numeric criteria. Most of the other 47 chemicals were not present at detectable levels below the SQS numeric criteria. The County measured low concentrations of PAHs, PCBs, phthalates, and metals below the numeric criteria for benthic toxicity.

In November 2001, King County performed sediment sampling from 0 to 2 cm depth at 13 sample locations near the two marine outfalls (EIM Data User Study ID RENT01). Sediment samples were analyzed for the 47 chemicals with numeric criteria in the sediment management standards. All samples met the sediment quality standards (SQS) numeric criteria. One sample (RT625SD) had a bis(2-ethylhexyl) phthalate concentration of 43 ppm, compared to the SQS criteria of 47 ppm. All other samples had bis(2-ethylhexyl) phthalate concentrations below 10 ppm. Five samples had detection limits for 2-methylphenol that were slightly above the sediment quality standards criteria, but were not detected in the sediment nor in the effluent. Most of the 47 chemicals were not present at detectable levels. The County measured low concentrations of PAH, phthalates, and metals below the numeric criteria for benthic toxicity.

In 2011, results from station STP625SP (sample ID: L53537-12) showed elevated bis(2-ethylhexyl) phthalate concentrations at 116 ppm OC, exceeding the SMS cleanup screening level (CSL) of 78 ppm OC. Based on the low level concentrations of bis(2-ethylhexyl) phthalate from the other stations and historical data from previous sampling events, King County determined the sample to be anomalous and elected to re-analyze the sample from remaining preserved sample matrix in triplicate to verify if the result was reproducible. Results from the triplicate analysis were 3.6, 3.7, and 3.2 ppm OC. These concentrations were then averaged along with the original measurement to yield 31.6 ppm OC, below the SQS criterion. Ecology approves of and appreciates the additional steps King County took to verify the integrity of a potentially anomalous result. Bis(2-ethylhexyl) phthalate can easily be imparted to a sample by a number of processes (e.g., airborne deposition during sample collection or transfer, a small piece of plastic not representative of the bulk sample matrix, handling cross-contamination).

In summary, historic sediment monitoring does not indicate sediment toxicity or a violation of the sediment management standards at this site. The proposed permit includes additional sediment monitoring to ensure continued compliance because of the large volume of discharge, some past instances of detection limits above the SQS numeric criteria, and 1997 concentrations in the chemical analyses of sediments above SQS near the site.

F. Summary of compliance with previous permit issued

The previous permit placed effluent limits on BOD_5, TSS, total residual chlorine, pH, and fecal coliform. The South Plant facility complied with effluent limits and permit conditions throughout the duration of the previous permit except for late DMR submittals in February 2010, March 2010, April 2010, and January 2012. The facility also exceeded the 85% loading criteria for TSS and BOD_5 for several months, which, while not a violation, would typically trigger capacity planning, according to permit condition S4. However, King County sufficiently demonstrated that these elevated loadings were due to leaking primary and secondary clarifier seals through which solids were routed back to the influent line causing artificially high influent numbers. King County fixed these seals in the summer of 2014 and loading values have decreased accordingly.

Ecology assessed compliance based on its review of the facility's information in Ecology's Permitting and Reporting Information System (PARIS), discharge monitoring reports (DMRs) and on inspections.

G. State environmental policy act (SEPA) compliance

State law exempts the issuance, reissuance or modification of any wastewater discharge permit from the SEPA process as long as the permit contains conditions that are no less stringent than federal and state rules and regulations (RCW 43.21C.0383). The exemption applies only to existing discharges, not to new discharges.

III. Proposed Permit Limits

Federal and state regulations require that effluent limits in an NPDES permit must be either technology- or water quality-based.

- Technology-based limits are based upon the treatment methods available to treat specific pollutants. Technology-based limits are set by the EPA and published as a regulation, or Ecology develops the limit on a case-by-case basis (40 CFR 125.3, and chapter 173-220 WAC).
- Water quality-based limits are calculated so that the effluent will comply with the Surface Water Quality Standards (chapter 173-201A WAC), Ground Water Standards (chapter 173-200 WAC), Sediment Quality Standards (chapter 173-204 WAC), or the National Toxics Rule (40 CFR 131.36).
- Ecology must apply the most stringent of these limits to each parameter of concern. These limits are described below.

The limits in this permit reflect information received in the application and from supporting reports (engineering, hydrogeology, etc.). Ecology evaluated the permit application and determined the limits needed to comply with the rules adopted by the state of Washington. Ecology does not develop effluent limits for all reported pollutants. Some pollutants are not treatable at the concentrations reported, are not controllable at the source, are not listed in regulation, and do not have a reasonable potential to cause a water quality violation.

Ecology does not usually develop limits for pollutants not reported in the permit application but may be present in the discharge. The permit does not authorize discharge of the non-reported pollutants. During the five-year permit term, the facility's effluent discharge conditions may change from those conditions reported in the permit application. The facility must notify Ecology if significant changes occur in any constituent [40 CFR 122.42(a)]. Until Ecology modifies the permit to reflect additional discharge of pollutants, a permitted facility could be violating its permit.

A. Design criteria

Under WAC 173-220-150 (1)(g), flows and waste loadings must not exceed approved design criteria. Ecology-approved design criteria for this facility's treatment plant, as listed in Table 7, were obtained from the October 1993 Plans and Specifications (*Metro's Regional Treatment Plant in Renton, Liquid Stream Improvements IIIB Part C*, Volume 9 of 11) and the October 1997 *East Division Reclamation Plant Stage 2 Liquid Stream Improvements – III2B.1*. Both documents were prepared by Brown and Caldwell Consultants and associated firms.

B. Technology-based effluent limits

Federal and state regulations define technology-based effluent limits for domestic wastewater treatment plants. These effluent limits are given in 40 CFR Part 133 (federal) and in chapter 173-221 WAC (state). These regulations are performance standards that constitute all known, available, and reasonable methods of prevention, control, and treatment (AKART) for domestic wastewater.

Table 7. Design Criteria for King County South Wastewater Treatment Plant

Parameter	Design Quantity
Monthly average flow (max. month)	144 MGD
Monthly average dry weather flow (AWDF)	96 MGD
Monthly average wet weather flow (AWWF)	115 MGD
Instantaneous peak flow	325 MGD
Maximum Month BOD_5 influent loading	251,000 lb/day
Maximum Month TSS influent loading	235,000 lb/day

The table below identifies technology-based limits for pH, fecal coliform, BOD_5, and TSS, as listed in chapter 173-221 WAC. Section III.F of this fact sheet describes the potential for water quality-based limits.

Table 8. Technology-based Limits

Parameter	Average Monthly Limit	Average Weekly Limit
BOD_5 (concentration)	30 mg/L	45 mg/L
	In addition, the BOD_5 effluent concentration must not exceed fifteen percent (15%) of the average influent concentration.	
$CBOD_5$ (concentration)	25 mg/L	40 mg/L
	In addition, the $CBOD_5$ effluent concentration must not exceed fifteen percent (15%) of the average influent concentration.	
TSS (concentration)	30 mg/L	45 mg/L
	In addition, the TSS effluent concentration must not exceed fifteen percent (15%) of the average influent concentration.	
Chlorine	0.5 mg/L	0.75 mg/L
Parameter	**Monthly Geometric Mean Limit**	**Weekly Geometric Mean Limit**
Fecal Coliform	200 organisms/100 mL	400 organisms/100 mL
Parameter	**Daily Minimum**	**Daily Maximum**
pH	6.0 standard units	9.0 standard units

King County requested Ecology replace BOD_5 limits with $CBOD_5$ limits because they were measuring artificially high BOD_5 levels as a result of nitrifying bacteria in the sampling system. Ecology granted this substitution, as allowable under WAC 173-221-050.

Ecology derived the technology-based monthly average limit for chlorine from standard operating practices. The Water Pollution Control Federation's *Chlorination of Wastewater* (1976) states that a properly designed and maintained wastewater treatment plant can achieve adequate disinfection if a 0.5 mg/L chlorine residual is maintained after fifteen minutes of contact time. See also Metcalf and Eddy, *Wastewater Engineering, Treatment, Disposal and Reuse*, Third Edition, 1991. A treatment plant that provides adequate chlorination contact

time can meet the 0.5 mg/L chlorine limit on a monthly average basis. According to WAC 173-221-030(11)(b), the corresponding weekly average is 0.75 mg/L.

Technology-based mass limits are based on WAC 173-220-130(3)(b) and 173-221-030(11)(b). Ecology calculated the monthly and weekly average mass limits for carbonaceous oxygen demand ($CBOD_5$) and total suspended solids as follows:

Mass Limit = CL x DF x CF

where:

CL = Technology-based concentration limits listed in the above table

DF = Maximum Monthly Average Design flow (MGD)

CF = Conversion factor of 8.34

The resulting technology-based mass limits are summarized in Table 9.

Table 9. Technology-based Mass Limits

Parameter	Concentration Limit (mg/L)	Mass Limit (lbs/day)
$CBOD_5$ Monthly Average	25	30,000
$CBOD_5$ Weekly Average	40	48,000
TSS Monthly Average	30	36,000
TSS Weekly Average	45	54,000

C. Surface water quality-based effluent limits

The Washington State surface water quality standards (chapter 173-201A WAC) are designed to protect existing water quality and preserve the beneficial uses of Washington's surface waters. Waste discharge permits must include conditions that ensure the discharge will meet the surface water quality standards (WAC 173-201A-510). Water quality-based effluent limits may be based on an individual waste load allocation or on a waste load allocation developed during a basin wide total maximum daily load study (TMDL).

Numerical criteria for the protection of aquatic life and recreation

Numerical water quality criteria are listed in the water quality standards for surface waters (chapter 173-201A WAC). They specify the maximum levels of pollutants allowed in receiving water to protect aquatic life and recreation in and on the water. Ecology uses numerical criteria along with chemical and physical data for the wastewater and receiving water to derive the effluent limits in the discharge permit. When surface water quality-based limits are more stringent or potentially more stringent than technology-based limits, the discharge must meet the water quality-based limits.

Numerical criteria for the protection of human health

The U.S. EPA has published 91 numeric water quality criteria for the protection of human health that are applicable to dischargers in Washington State (EPA, 1992). These criteria are designed to protect humans from exposure to pollutants linked to cancer and other diseases, based on consuming fish and shellfish and drinking contaminated surface waters. The water quality standards also include radionuclide criteria to protect humans from the effects of radioactive substances.

Narrative criteria

Narrative water quality criteria (e.g., WAC 173-201A-240(1); 2006) limit the toxic, radioactive, or other deleterious material concentrations that the facility may discharge to levels below those which have the potential to:

- Adversely affect designated water uses.
- Cause acute or chronic toxicity to biota.
- Impair aesthetic values.
- Adversely affect human health.

Narrative criteria protect the specific designated uses of all fresh waters (WAC 173-201A-200, 2006) and of all marine waters (WAC 173-201A-210, 2006) in the state of Washington.

Antidegradation

Description--The purpose of Washington's Antidegradation Policy (WAC 173-201A-300-330; 2006) is to:

- Restore and maintain the highest possible quality of the surface waters of Washington.
- Describe situations under which water quality may be lowered from its current condition.
- Apply to human activities that are likely to have an impact on the water quality of surface water.
- Ensure that all human activities likely to contribute to a lowering of water quality, at a minimum, apply all known, available, and reasonable methods of prevention, control, and treatment (AKART).
- Apply three tiers of protection (described below) for surface waters of the state.

Tier I ensures existing and designated uses are maintained and protected and applies to all waters and all sources of pollutions. Tier II ensures that waters of a higher quality than the criteria assigned are not degraded unless such lowering of water quality is necessary and in the overriding public interest. Tier II applies only to a specific list of polluting activities. Tier III prevents the degradation of waters formally listed as "outstanding resource waters," and applies to all sources of pollution.

A facility must prepare a Tier II analysis when all three of the following conditions are met:

- The facility is planning a new or expanded action.
- Ecology regulates or authorizes the action.
- The action has the potential to cause measurable degradation to existing water quality at the edge of a chronic mixing zone.

Facility Specific Requirements--This facility must meet Tier I requirements.

- Dischargers must maintain and protect existing and designated uses. Ecology must not allow any degradation that will interfere with, or become injurious to, existing or designated uses, except as provided for in chapter 173-201A WAC.

Ecology's analysis described in this section of the fact sheet demonstrates that the proposed permit conditions will protect existing and designated uses of the receiving water.

Mixing zones

A mixing zone is the defined area in the receiving water surrounding the discharge port(s), where wastewater mixes with receiving water. Within mixing zones the pollutant concentrations may exceed water quality numeric standards, so long as the discharge doesn't interfere with designated uses of the receiving water body (for example, recreation, water supply, and aquatic life and wildlife habitat, etc.) The pollutant concentrations outside of the mixing zones must meet water quality numeric standards.

State and federal rules allow mixing zones because the concentrations and effects of most pollutants diminish rapidly after discharge, due to dilution. Ecology defines mixing zone sizes to limit end-of-pipe discharge exposure to prevent harm to water quality, plants, or fish.

The state's water quality standards allow Ecology to authorize mixing zones for the facility's permitted wastewater discharges only if those discharges already receive all known, available, and reasonable methods of prevention, control, and treatment (AKART). Mixing zones typically require compliance with water quality criteria within a specified distance from the point of discharge and must not use more than 25% of the available width of the water body for dilution [WAC 173-201A-400(7)].

Ecology uses modeling to estimate the amount of mixing within the mixing zone. Through modeling Ecology determines the potential for violating the water quality standards at the edge of the mixing zone and derives any necessary effluent limits. Steady-state models are the most frequently used tools for conducting mixing zone analyses. Ecology chooses values for each effluent and for receiving water variables that correspond to the time period when the most critical condition is likely to occur (see Ecology's *Permit Writer's Manual*). Each critical condition parameter, by itself, has a low probability of occurrence and the resulting dilution factor is conservative. The term "reasonable worst-case" applies to these values.

The mixing zone analysis produces a numerical value called a dilution factor (DF). A dilution factor represents the amount of mixing of effluent and receiving water that occurs at the boundary of the mixing zone. For example, a dilution factor of 4 means the effluent is 25% and the receiving water is 75% of the total volume of water at the boundary of the mixing zone. Ecology uses dilution factors with the water quality criteria to calculate reasonable potentials and effluent limits. Water quality standards include both aquatic life-based criteria and human health-based criteria. The former are applied at both the acute and chronic mixing zone boundaries; the latter are applied only at the chronic boundary. The concentration of pollutants at the boundaries of any of these mixing zones may not exceed the numerical criteria for that zone.

Most aquatic life *acute* criteria are based on the assumption that organisms are not exposed to that concentration for more than one hour and more often than one exposure in three years. Most aquatic life *chronic* criteria are based on the assumption that organisms are not exposed to that concentration for more than four consecutive days and more often than once in three years.

The two types of human health-based water quality criteria distinguish between those pollutants linked to non-cancer effects (non-carcinogenic) and those linked to cancer effects (carcinogenic). The human health-based water quality criteria incorporate several exposure and risk assumptions. These assumptions include:

- A 70-year lifetime of daily exposures.
- An ingestion rate for fish or shellfish measured in kg/day.
- An ingestion rate of two liters/day for drinking water.
- A one-in-one-million cancer risk for carcinogenic chemicals.

This permit authorizes a small acute mixing zone, surrounded by a chronic mixing zone around the point of discharge (WAC 173-201A-400) for the Puget Sound outfall 001. The water quality standards impose certain conditions before allowing the discharger a mixing zone:

1. *Ecology must specify both the allowed size and location in a permit.*

   The proposed permit specifies the sizes and locations of the allowed mixing zone (as specified below).

2. *The facility must fully apply "all known, available, and reasonable methods of prevention, control and treatment" (AKART) to its discharge.*

   Ecology has determined that the treatment provided meets the requirements of AKART (see "Technology-based Limits").

3. *Ecology must consider critical discharge conditions.*

   Surface water quality-based limits are derived for the water body's critical condition (the receiving water and waste discharge condition with the highest potential for adverse impact on the aquatic biota, human health, and existing or designated waterbody uses). The critical discharge condition is often pollutant-specific or waterbody-specific.

   Critical discharge conditions are those conditions that result in reduced dilution or increased effect of the pollutant. Factors affecting dilution include the depth of water, the density stratification in the water column, the currents, and the rate of discharge. Density stratification is determined by the salinity and temperature of the receiving water. Temperatures are warmer in the surface waters in summer. Therefore, density stratification is generally greatest during the summer months. Density stratification affects how far up in the water column a freshwater plume may rise. The rate of mixing is greatest when an effluent is rising. The effluent stops rising when the mixed effluent is the same density as the surrounding water. After the effluent stops rising, the rate of mixing is much more gradual. Water depth can affect dilution when a plume might rise to the surface when there is little or no stratification. Ecology uses the water depth at mean lower low water (MLLW) for marine waters. Ecology's *Permit Writer's Manual* describes additional guidance on criteria/design conditions for determining dilution factors. The manual can be obtained from Ecology's website at: https://fortress.wa.gov/ecy/publications/SummaryPages/92109.html.

   The critical conditions used for modeling the Puget Sound and Green River outfalls are listed in Table 10 and Table 11.

Table 10. Critical Conditions Used to Model the Puget Sound Outfall 001

Critical Condition	Value
Water depth at MLLW	623 feet
Density profile with a difference of 0.61 sigma-t units between -607 feet and the surface	
90th percentile current speeds for acute mixing zone	0.14 -0.39 m/sec
50th percentile current speeds for chronic and human health mixing zones	0.069 – 0.125 m/sec
Maximum average monthly effluent flow for chronic and human health non-carcinogen	144 MGD
Annual average flow for human health carcinogen	106 MGD
Maximum daily flow for acute mixing zone	235 MGD
1 DAD MAX effluent temperature	12˚C

Ecology obtained ambient data at critical conditions in the vicinity of the Puget Sound outfall from the King County Study called *Effluent Dilution Modeling for South Wastewater Treatment Plant Outfall Study* conducted in September 2013.

Table 11. Critical Conditions Used to Model the Green River Outfall 002

Critical Condition	Value
Minimum Green River daily average flow: June 1 – October 31 Minimum Green River daily average flow: November 1 – May 31	500 cfs 1000 cfs
Maximum daily discharge flow: June 1 – October 31 Maximum daily discharge flow: November 1 – May 31	16 MGD 32 MGD

Ecology obtained critical condition ambient data in the vicinity of the Green River outfall from various studies as entered into Ecology's EIM database and from USGS's website.

4. *Supporting information must clearly indicate the mixing zone would not:*

- Have a reasonable potential to cause the loss of sensitive or important habitat.
- Substantially interfere with the existing or characteristic uses.
- Result in damage to the ecosystem.
- Adversely affect public health.

Ecology established Washington State water quality criteria for toxic chemicals using EPA criteria. EPA developed the criteria using toxicity tests with numerous organisms and set the criteria to generally protect the species tested and to fully protect all commercially and recreationally important species.

EPA sets acute criteria for toxic chemicals assuming organisms are exposed to the pollutant at the criteria concentration for one hour. They set chronic standards assuming organisms are exposed to the pollutant at the criteria concentration for four days. Dilution modeling under critical conditions generally shows that both acute and chronic criteria concentrations are reached within minutes of discharge.

The discharge plume does not impact drifting and non-strong swimming organisms because they cannot stay in the plume close to the outfall long enough to be affected. Strong swimming fish could maintain a position within the plume, but they can also avoid the discharge by swimming away. Mixing zones generally do not affect benthic organisms (bottom dwellers) because the buoyant plume rises in the water column.

Ecology has additionally determined that the effluent will not exceed 33 degrees C for more than two seconds after discharge; and that the temperature of the water will not create lethal conditions or blockages to fish migration.

Ecology evaluates the cumulative toxicity of an effluent by testing the discharge with whole effluent toxicity (WET) testing.

Ecology reviewed the above information, the specific information on the characteristics of the discharges, the receiving waters characteristics, and the discharge locations. Based on this review, Ecology concluded that the discharges do not have a reasonable potential to cause the loss of sensitive or important habitat, substantially interfere with existing or characteristics uses, result in damage to the ecosystem, or adversely affect public health if the permit limits are met.

5. *The discharge/receiving water mixture must not exceed water quality criteria outside the boundary of a mixing zone.*

   Ecology conducted a reasonable potential analysis, using procedures established by the EPA and by Ecology, for each pollutant and concluded the discharge/receiving water mixture will not violate water quality criteria outside the boundaries of the mixing zones if permit limits are met.

6. *The size of the mixing zone and the concentrations of the pollutants must be minimized.*

   At any given time, the effluent plume uses only a portion of the acute and chronic mixing zone, which minimizes the volume of water involved in mixing. Because tidal currents change direction, the plume orientation within the mixing zone changes. The plume mixes as it rises through the water column therefore much of the receiving water volume at lower depths in the mixing zone is not mixed with discharge. Similarly, because the discharge may stop rising at some depth due to density stratification, waters above that depth will not mix with the discharge. Ecology determined it is impractical to specify in the permit the actual, much more limited volume in which the dilution occurs as the plume rises and moves with the current.

   Ecology minimizes the size of mixing zones by requiring dischargers to install diffusers when they are appropriate to the discharge and the specific receiving waterbody. When a diffuser is installed, the discharge is more completely mixed with the receiving water in a shorter time. Ecology also minimizes the size of the mixing zone (in the form of the dilution factor) using design criteria with a low probability of occurrence. For example, Ecology uses the expected 95th percentile pollutant concentration, the 90th percentile background concentration, the centerline dilution factor, and the lowest flow occurring once in every ten years to perform the reasonable potential analysis.

   Because of the above reasons, Ecology has effectively minimized the sizes of the mixing zones authorized in the proposed permit.

7. *Maximum size of chronic mixing zone.*

   The authorized chronic mixing zone for the Puget Sound discharge does not exceed the maximum size restriction. Ecology did not authorize a chronic mixing zone for the Green River discharge.

8. *Acute mixing zone.*

Puget Sound Outfall No. 001

- *The discharge/receiving water mixture must comply with acute criteria as near to the point of discharge as practicably attainable.*

  Ecology determined the acute criteria will be met at 10% of the distance of the chronic mixing zone.

- *The pollutant concentration, duration, and frequency of exposure to the discharge will not create a barrier to migration or translocation of indigenous organisms to a degree that has the potential to cause damage to the ecosystem.*

  As described above, the toxicity of any pollutant depends upon the exposure, the pollutant concentration, and the time the organism is exposed to that concentration. Authorizing a limited acute mixing zone for this discharge assures that it will not create a barrier to migration. The effluent from this discharge will rise as it enters the receiving water, assuring that the rising effluent will not cause translocation of indigenous organisms near the point of discharge (below the rising effluent).

- *Comply with size restrictions.*

  The mixing zone authorized for this discharge complies with the size restrictions published in chapter 173-201A WAC.

Green River Outfall No. 002 (maintenance)

WAC 173-201A-400(8) limits freshwater acute mixing zones to 2.5% of river flow or less. King County must use flows larger than 2.5% of the Green River flow to achieve the maintenance goal of clearing settled sediments from the outfall diffuser ports. WAC 173-201A-400(12) allows extended mixing zones if: (1) the discharge existed prior to November 24, 1992, or (2) if the altered size results in greater protection of existing and characteristic uses. Maintenance discharges at the Green River outfall meet both of these requirements. The outfall existed prior to 1992 and the discharge impacts to salmon migration are minimized if King County performs maintenance discharges during summer months when the river flow is low. Ecology continues to permit discharges from this outfall for maintenance purposes because this outfall provides a backup discharge option should the primary outfall line become unuseable or not meet capacity requirements.

Ecology therefore granted a mixing zone that encompasses 25% of the Green River flow for maintenance discharges. These discharges will occur infrequently and are permitted for a maximum duration of 4 hours. During the previous permit cycle, King County discharged to the Green River once in five years.

9. *Overlap of mixing zones.*

The mixing zones authorized in this permit do not overlap other mixing zones.

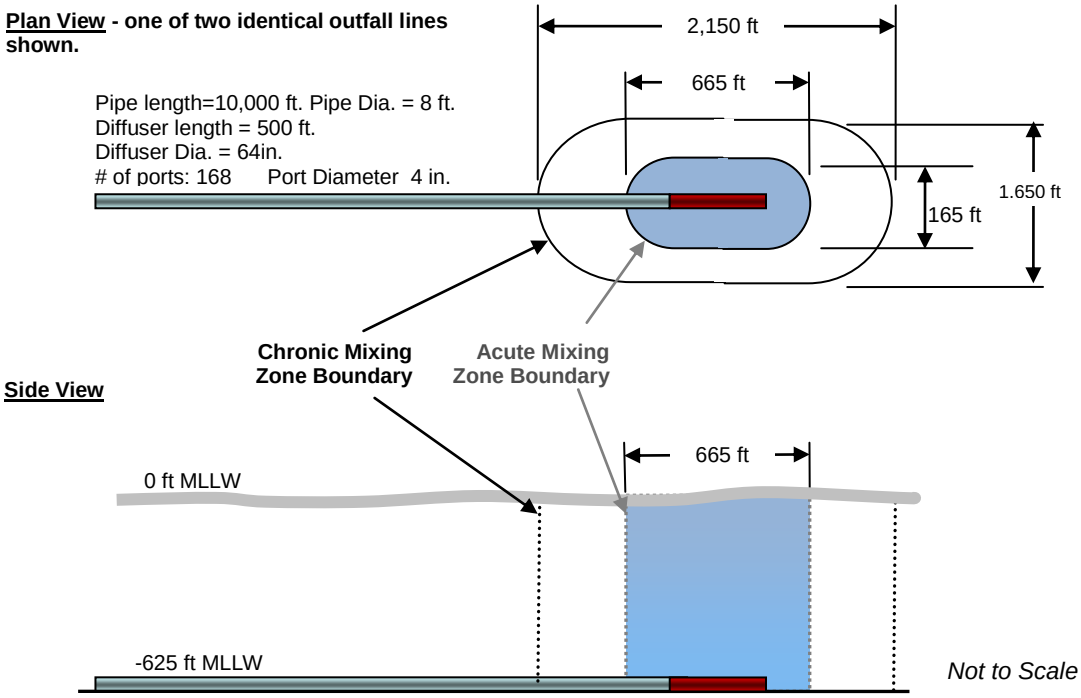

Figure 5. South Plant's Outfall 001 Mixing Zone Diagram.

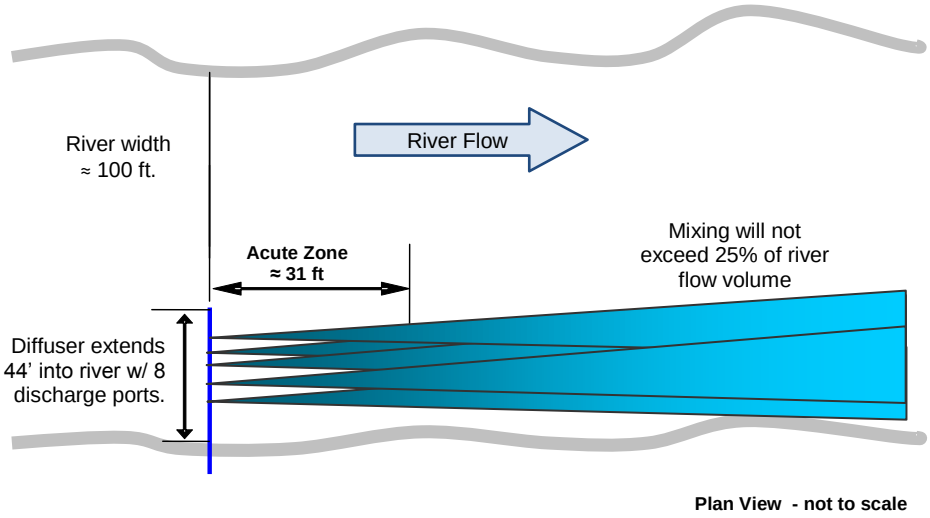

Figure 6. South Plant's Outfall 002 Mixing Zone Diagram (Green River)

D. Designated uses and surface water quality criteria

Applicable designated uses and surface water quality criteria are defined in chapter 173-201A WAC. In addition, the U.S. EPA set human health criteria for toxic pollutants (EPA 1992). The tables included below summarize the criteria applicable to the receiving waters' designated uses.

Puget Sound Outfall No. 001 (marine)

Aquatic life uses for marine discharges are designated using the following general categories. All indigenous fish and non-fish aquatic species must be protected in waters of the state.

a. Extraordinary quality salmonid and other fish migration, rearing, and spawning; clam, oyster, and mussel rearing and spawning; crustaceans and other shellfish (crabs, shrimp, crayfish, scallops, etc.) rearing and spawning.

b. Excellent quality salmonid and other fish migration, rearing, and spawning; clam, oyster, and mussel rearing and spawning; crustaceans and other shellfish (crabs, shrimp, crayfish, scallops, etc.) rearing and spawning.

c. Good quality salmonid migration and rearing; other fish migration, rearing, and spawning; clam, oyster, and mussel rearing and spawning; crustaceans and other shellfish (crabs, shrimp, crayfish, scallops, etc.) rearing and spawning.

d. Fair quality salmonid and other fish migration.

The *Aquatic Life Uses* and the associated criteria for this receiving water are identified below.

Table 12. Marine Aquatic Life Uses and Associated Criteria

Extraordinary Quality	
Temperature Criteria – Highest 1D Max	13°C (55.4°F)
Dissolved Oxygen Criteria – Lowest 1-Day Min	7.0 mg/L
Turbidity Criteria	• 5 NTU over background when the background is 50 NTU or less; or • A 10 percent increase in turbidity when the background turbidity is more than 50 NTU.
pH Criteria	pH must be within the range of 7.0 to 8.5 with a human-caused variation within the above range of less than 0.2 units.

To protect shellfish harvesting, fecal coliform organism levels must not exceed a geometric mean value of 14 colonies/100 mL, and not have more than 10 percent of all samples (or any single sample when less than ten sample points exist) obtained for calculating the geometric mean value exceeding 43 colonies/100 mL.

The *recreational use categories include* primary contact recreation and secondary contact recreation. The recreational uses for this receiving water are identified below.

Table 13. Recreational Uses

Recreational Use	**Criteria**
Primary Contact Recreation	Fecal coliform organism levels must not exceed a geometric mean value of 14 colonies/100 mL, with not more than 10 percent of all samples (or any single sample when less than ten sample points exist) obtained for calculating the geometric mean value exceeding 43 colonies /100 mL.

The *miscellaneous marine water uses* are wildlife habitat, harvesting, commerce and navigation, boating, and aesthetics.

Green River Discharge (freshwater):

Aquatic Life Uses for freshwater discharges are designated based on the presence of, or the intent to provide protection for, the key uses. All indigenous fish and non-fish aquatic species must be protected in waters of the state in addition to the key species. The Aquatic Life Uses for the Green River at the Emergency Outfall location are identified below.

Table 14. Aquatic Life Uses & Associated Criteria

Salmonid Spawning, Rearing, and Migration	
Temperature Criteria – Highest 7DAD Max	17.5°C (63.5°F)
Dissolved Oxygen Criteria – Lowest 1-Day Min	8.0 mg/L
Turbidity Criteria	• 5 NTU over background when the background is 50 NTU or less; or • A 10 percent increase in turbidity when the background turbidity is more than 50 NTU.
pH Criteria	pH shall be within the range of 6.5 to 8.5 with a human-caused variation within the above range of less than 0.5 units.

The *recreational uses* are extraordinary primary contact recreation, primary contact recreation, and secondary contact recreation. The recreational uses for this receiving water are identified below.

Table 15. Recreational Uses and Associated Criteria

Recreational Use	**Criteria**
Primary Contact Recreation	Fecal coliform organism levels must not exceed a geometric mean value of 100 colonies /100 mL, with not more than 10 percent of all samples (or any single sample when less than ten sample points exist) obtained for calculating the geometric mean value exceeding 200 colonies/100 mL.

The *water supply uses* are domestic, agricultural, industrial, and stock watering.

The *miscellaneous freshwater uses* are wildlife habitat, harvesting, commerce and navigation, boating, and aesthetics.

E. Water quality impairments

Central Puget Sound is not listed for any 303(d) impairments in the vicinity of the South Plant WWTP outfall 001. Ecology is conducting a South Puget Sound Dissolved Oxygen study which should be finalized in the next few years.

Ecology lists the Green River as a category 5 waterbody for dissolved oxygen and bacteria in their 2012 303(d) assessment. EPA approved Ecology's Green River Temperature TMDL in 2011. In 1992 Ecology issued an ammonia-nitrogen TMDL in the Green/Duwamish system that identified a zero ammonia-nitrogen wasteload allocation for King County's Renton South Plant (except during emergencies and planned short-term maintenance). King County responded to this TMDL by relocating their South Plant WWTP outfall to the Puget Sound.

F. Evaluation of surface water quality-based effluent limits for narrative criteria

Ecology must consider the narrative criteria described in WAC 173-201A-160 when it determines permit limits and conditions. Narrative water quality criteria limit the toxic, radioactive, or other deleterious material concentrations that the facility may discharge which have the potential to adversely affect designated uses, cause acute or chronic toxicity to biota, impair aesthetic values, or adversely affect human health.

Ecology considers narrative criteria when it evaluates the characteristics of the wastewater and when it implements all known, available, and reasonable methods of treatment and prevention (AKART) as described above in the technology-based limits section. When Ecology determines if a facility is meeting AKART it considers the pollutants in the wastewater and the adequacy of the treatment to prevent the violation of narrative criteria.

In addition, Ecology considers the toxicity of the wastewater discharge by requiring whole effluent toxicity (WET) testing when there is a reasonable potential for the discharge to contain toxics. Ecology's analysis of the need for WET testing for this discharge is described later in the fact sheet.

G. Evaluation of surface water quality-based effluent limits for numeric criteria

Pollutants in an effluent may affect the aquatic environment near the point of discharge (near-field) or at a considerable distance from the point of discharge (far-field). Toxic pollutants, for example, are near-field pollutants; their adverse effects diminish rapidly with mixing in the receiving water. Conversely, a pollutant such as biochemical oxygen demand (BOD_5) is a far-field pollutant whose adverse effect occurs away from the discharge even after dilution has occurred. Thus, the method of calculating surface water quality-based effluent limits varies with the point at which the pollutant has its maximum effect.

With technology-based controls (AKART), predicted pollutant concentrations in the discharge exceed water quality criteria. Ecology therefore authorizes a mixing zone in accordance with the geometric configuration, flow restriction, and other restrictions imposed on mixing zones by chapter 173-201A WAC.

Puget Sound Outfall No. 001

The two 64 inch diameter diffusers at Outfall 001 are 500 feet long. The diffusers each have 168 staggered four inch diameter ports which are spaced 3 feet apart. The diffusers are approximately 625 feet deep mean lower low water (MLLW).

Chronic Mixing Zone --WAC 173-201A-400(7)(b) specifies that mixing zones must not extend in any horizontal direction from the discharge ports for a distance greater than 200 feet plus the depth of water over the discharge ports and may not occupy more than 25% of the width of the water body as measured during MLLW.

The horizontal dimensions of the chronic mixing zone for Outfall 001 are 2150 by 1650 feet. The mixing zone extends from the bottom to the top of the water column.

Acute Mixing Zone--WAC 173-201A-400(8)(b) specifies that in estuarine waters a zone where acute criteria may be exceeded must not extend beyond 10% of the distance established for the chronic zone. The acute mixing zone for Outfall 001 extends 82.5 feet in any direction from each discharge port.

Ecology provided a thorough review of the County's data, dilution factors, and modeling in 2009 and again in 2014. Ecology verified that the County used conservative assumptions and provided rigorous modeling to obtain the dilution factors. Using updated density profile and plant flow data, King County concluded that the dilution factors are the same as those predicted in 2009 due to very similar plant flow conditions. Design flow rates were used for the chronic mixing zone and human health mixing zone analyses so those did not change from the previous analysis. The dilution factors are listed Table 16.

Table 16. Dilution Factors

Criteria	Acute	Chronic
Aquatic Life	186	225
Human Health, Carcinogen		428
Human Health, Non-carcinogen		428

Ecology determined the impacts of dissolved oxygen deficiency, nutrients, pH, fecal coliform, turbidity, chlorine, ammonia, metals, other toxics, and temperature as described below, using the dilution factors in the above table. The derivation of surface water quality-based limits also takes into account the variability of pollutant concentrations in both the effluent and the receiving water.

Dissolved Oxygen--BOD_5 and Ammonia Effects--Natural decomposition of organic material in wastewater effluent impacts dissolved oxygen in the receiving water at distances far outside of the regulated mixing zone. The 5-day Biochemical Oxygen Demand (BOD_5) of an effluent sample indicates the amount of biodegradable material in the wastewater and estimates the magnitude of oxygen consumption the wastewater will generate in the receiving water. The amount of ammonia-based nitrogen in the wastewater also provides an indication of oxygen demand potential in the receiving water.

Ecology modeled the impact of BOD_5 on the receiving water at critical conditions using an effluent concentration of 45 mg/L (the technology-based effluent limit for BOD_5) and an oxidation rate of 0.23/day (see Appendix E). Ecology predicts no violation of the surface water quality standards for dissolved oxygen due to the impacts of BOD_5, therefore, the proposed permit contains the technology-based effluent limits for $CBOD_5$. The permit does not contain a limit for ammonia for dissolved oxygen impacts; ammonia toxicity is examined elsewhere in this fact sheet.

pH--Compliance with the technology-based limits of 6.0 to 9.0 will assure compliance with the water quality standards of surface waters because of the high buffering capacity of marine water.

Fecal Coliform--Ecology modeled the numbers of fecal coliform by simple mixing analysis using the technology-based limit of 400 organisms per 100 ml and a dilution factor of 225. Under critical conditions, modeling predicts no violation of the water quality criterion for fecal coliform. Therefore, the proposed permit includes the technology-based effluent limit for fecal coliform bacteria.

Turbidity--Ecology evaluated the impact of turbidity based on the range of total suspended solids in the effluent and turbidity of the receiving water. Ecology expects no violations of the turbidity criteria outside the designated mixing zone provided the facility meets its technology-based total suspended solids permit limits.

Toxic Pollutants--Federal regulations (40 CFR 122.44) require Ecology to place limits in NPDES permits on toxic chemicals in an effluent whenever there is a reasonable potential for those chemicals to exceed the surface water quality criteria. Ecology does not exempt facilities with technology-based effluent limits from meeting the surface water quality standards.

The following toxic pollutants are present in the discharge: chlorine, ammonia, antimony, arsenic, bis(2-ethylhexyl)phthalate, cadmium, chloroform, chromium, copper, cyanide, diethyl phthalate, lead, mercury, nickel, silver, tetrachloroethylene, zinc, 1,4-dichlorobenzene, 2,4,6-trichlorophenol, 2,4-dichlorophenol, and nonylphenol isomer. Ecology conducted a reasonable potential analysis (see Appendix E) on these parameters to determine if any required effluent limits are necessary in this permit.

King County provided ambient data in their 2013 receiving water study and the following parameters were detected in the receiving water: ammonia, antimony, arsenic, cadmium, chlorine, chromium (hex), copper, lead, mercury, nickel, silver, and zinc. Ecology used the 90% concentrations for these pollutants in the reasonable potential analysis and assumed zero for ambient concentrations if data was not available.

Ammonia's toxicity depends on that portion which is available in the unionized form. The amount of unionized ammonia depends on the temperature, pH, and salinity of the receiving marine water. To evaluate ammonia toxicity, Ecology used the available receiving water information from King County's 2013 ambient study and Ecology spreadsheet tools.

Ecology determined that none of the toxics detected in the effluent pose a reasonable potential to exceed the water quality criteria at the critical condition using procedures given in EPA, 1991. Ecology's determination assumes that this facility meets the other effluent limits of this permit.

For chlorine, calculations show that technology-based limits are more stringent than water quality-based limits. The discharge will meet the chlorine water quality criteria if the technology-based limits are met.

Temperature--The state temperature standards (WAC 173-201A-200-210 and 600-612) include multiple elements: annual summer maximum threshold criteria, supplemental spawning and rearing season criteria, incremental warming restrictions, and protections against acute effects. Ecology evaluates each criterion independently to determine reasonable potential and derive permit limits.

Annual summer maximum and supplementary spawning/rearing criteria - Each water body has an annual maximum temperature criterion [WAC 173-201A-200(1)(c), 210(1)(c), and Table 602]. These threshold criteria protect specific categories of aquatic life by controlling the effect of human actions on summer temperatures.

Some waters have an additional threshold criterion to protect the spawning and incubation of salmonids (9°C for char and 13°C for salmon and trout) [WAC 173-201A-602, Table 602]. These criteria apply during specific date-windows.

The threshold criteria apply at the edge of the chronic mixing zone. Criteria for most fresh waters are expressed as the highest 7-Day average of daily maximum temperature (7-DADMax). The 7-DADMax temperature is the arithmetic average of seven consecutive measures of daily maximum temperatures. Criteria for marine waters and some fresh waters are expressed as the highest 1-Day annual maximum temperature (1-DMax).

Incremental warming criteria - The water quality standards limit the amount of warming human sources can cause under specific situations [WAC 173-201A-200(1)(c)(i)-(ii), 210(1)(c)(i)-(ii)]. The incremental warming criteria apply at the edge of the chronic mixing zone.

At locations and times when background temperatures are cooler than the assigned threshold criterion, point sources are permitted to warm the water by only a defined increment. These increments are permitted only to the extent doing so does not cause temperatures to exceed either the annual maximum or supplemental spawning criteria.

At locations and times when a threshold criterion is being exceeded due to natural conditions, all human sources, considered cumulatively, must not warm the water more than 0.3°C above the naturally warm condition.

When Ecology has not yet completed a TMDL, our policy allows each point source to warm water at the edge of the chronic mixing zone by 0.3°C. This is true regardless of the background temperature and even if doing so would cause the temperature at the edge of a standard mixing zone to exceed the numeric threshold criteria. Allowing a 0.3°C warming for each point source is reasonable and protective where the dilution factor is based on 25% or less of the critical flow. This is because the fully mixed effect on temperature will only be a fraction of the 0.3°C cumulative allowance (0.075°C or less) for all human sources combined.

Protections for temperature acute effects –

Instantaneous lethality to passing fish: The upper 99th percentile daily maximum effluent temperature must not exceed 33°C, unless a dilution analysis indicates ambient temperatures will not exceed 33°C two seconds after discharge.

General lethality and migration blockage: Measurable (0.3°C) increases in temperature at the edge of a chronic mixing zone are not allowed when the receiving water temperature exceeds either a 1DMax of 23°C or a 7DADMax of 22°C.

Lethality to incubating fish: Human actions must not cause a measurable (0.3°C) warming above 17.5°C at locations where eggs are incubating.

Reasonable Potential Analysis for Annual summer maximum and incremental warming criteria - Ecology calculated the reasonable potential for the discharge to exceed the annual summer maximum and the incremental warming criteria at the edge of the chronic mixing zone during critical conditions (see Appendix E). No reasonable potential exists to exceed the temperature criterion where:

(Criterion + 0.3) > [Criterion + (Teffluent95 – Criterion)/DF].
(13 + 0.3) > (13 + (22.3 – 13.0)/225)
13.3 > 13.04

King County reported temperature data with their monthly discharge monitoring reports; Ecology used the 95th percentile of the 1DADmax value reported. Using a dilution factor of 225 and maximum daily temperature of 12.7°C for the receiving water, the predicted maximum daily temperature at the mixing zone boundary is 12.74°C. Thus, under the worst case scenario, the effluent discharge from this facility results in warming of the ambient temperature by 0.04°C, which is less than the allowable warming temperature of 0.3°C. Therefore, the proposed permit does not include a temperature limit.

Green River Outfall No. 002 (maintenance only)

Ecology limits maintenance discharges to four hours therefore chronic water quality standards do not apply. Ecology calculated the acute dilution factor based the conditions expected during discharges for maintenance purposes. Ecology also assumed dilution with 25% of the river flow, consistent with WAC 173-201A-400(12). The resultant dilution factor is 5.0, as shown in Table 17.

Table 17. Dilution Factors - Green River Outfall No. 002

Green River Outfall	Acute	Chronic
Aquatic Life – Maintenance	5.0	Not Applicable
Aquatic Life – Emergency	Permitted Under S5.F	Not Applicable

Ecology assessed compliance with water quality standards using this dilution factor. To guarantee this dilution is achieved under the various flow conditions of the river, and to allow larger discharge volumes during the winter months when the river flows are higher, the permit includes the flow restrictions listed in Table 18.

Table 18. Discharge flow restrictions to achieve required dilution in the Green River

	Minimum Green River daily average flow	Maximum daily discharge flow
June 1 – October 31	500 cfs	16 MGD (25 cfs)
November 1 – May 31	1000 cfs	32 MGD (50 cfs)

The dilution factor was calculated assuming the effluent mixes with 25% of the river flow (0.25*500/25=5.0). This dilution applies to *planned maintenance* discharges only; *emergency* discharges are permitted under Special Condition S5.F. Effluent limits were not imposed for emergency use because it is Ecology's understanding that such use will only occur under extreme and unpredictable circumstances.

Dissolved Oxygen--BOD_5—The DO water quality criteria for freshwater are based on lowest 1-day minimums. Since the duration of maintenance discharges at the Green River outfall is at maximum 4 hours, Ecology assumes that the one day average DO in the receiving water will not be impacted significantly by this discharge.

Temperature—The temperature water quality criteria for freshwater are based on seven day averages. Since the duration of maintenance discharges at the Green River outfall is at maximum 4 hours, Ecology assumes that the seven day average temperature in the receiving water will not be significantly impacted by this discharge.

Fecal Coliform—The numbers of fecal coliform were modeled by simple mixing analysis using the technology-based limit of 200 organisms per 100 ml and a chronic dilution factor of 5.0. The resulting fecal coliform at the edge of the chronic dilution zone is 65 per 100 ml. Under critical conditions there is no predicted violation of the water quality standards for surface waters with the technology-based limit. Therefore, the technology-based effluent limit for fecal coliform bacteria was placed in the proposed permit.

Toxic Pollutants—Federal regulations (40 CFR 122.44) require NPDES permits to contain effluent limits for toxic chemicals in an effluent whenever there is a reasonable potential for those chemicals to exceed the surface water quality criteria. A reasonable potential

calculation on the priority pollutants measured during the previous permit term showed no reasonable potential for any toxins measured except for chlorine, see Appendix E. Ecology derived effluent limits for chlorine using methods from EPA, 1991 and the acute criteria, as shown in Appendix E. Ecology also confirmed that there is no reasonable potential for the Green River discharge to exceed the ammonia water quality criteria when effluent and river flows meet the requirements of the proposed permit.

H. Human health

Washington's water quality standards include 91 numeric human health-based criteria that Ecology must consider when writing NPDES permits. These criteria were established in 1992 by the U.S. EPA in its National Toxics Rule (40 CFR 131.36). The National Toxics Rule allows states to use mixing zones to evaluate whether discharges comply with human health criteria.

Ecology determined the effluent may contain chemicals of concern for human health, based on the facility's status as an EPA major discharger and data indicating the discharge contains regulated chemicals. Ecology evaluated the discharge's potential to violate the water quality standards as required by 40 CFR 122.44(d) by following the procedures published in the *Technical Support Document for Water Quality-Based Toxics Control* (EPA/505/2-90-001) and Ecology's *Permit Writer's Manual* to make a reasonable potential determination. The evaluation showed that the discharge has no reasonable potential to cause a violation of any of the 91 numeric human health-based criteria and that effluent limits for human health pollutants are not needed.

I. Sediment quality

The aquatic sediment standards (chapter 173-204 WAC) protect aquatic biota and human health. Under these standards Ecology may require a facility to evaluate the potential for its discharge to cause a violation of sediment standards (WAC 173-204-400). You can obtain additional information about sediments at the Aquatic Lands Cleanup Unit website. http://www.ecy.wa.gov/programs/tcp/smu/sediment.html

Even though sediment sampling conducted during the previous permit term showed no violations of the sediment quality standards, Ecology determined that this discharge has potential to cause a violation of the sediment quality standards because:

- Many significant industrial users discharge to the facility's collection system
- This facility is considered an EPA major facility and discharges a very large volume of treated municipal wastewater to the Puget Sound.
- In some of the past testing, detection limits were above the SQS numeric criteria.
- In 1997, three locations had detected concentrations of hexachlorobenzene above the SQS numeric criteria for benthic toxicity.

The proposed permit includes a condition requiring King County to:

- Sample and analyze sediments in the vicinity of South Plant's outfall to characterize sediment quality (the nature and extent of chemical contamination and biological toxicity) in the vicinity of the Permittee's discharge locations. Specifically, sediment sampling will be required for 0 to 10 cm depth at 8 locations near the two diffusers.

Chemical analysis of the 47 chemicals in the sediment management standards plus conventional analytes will be required at all 8 sites. Bioassays will be performed, if the chemical concentrations are near or above the sediment management standards numeric chemical criteria.

- The Permittee must develop a *Sampling and Analysis Plan* in accordance with the current Sediment Sampling and Analysis Plan Appendix. The *Sampling and Analysis Plan* must be approved by Ecology before performing sediment sampling. After the sediment sampling is completed, the Permittee must submit a Sediment Data Report and Environmental Information Management (EIM) templates to Ecology for review and approval.
- If the sediment evaluation shows toxicity at any station, the Permittee must perform additional testing to investigate the source of sediment toxicity.

J. Whole effluent toxicity

The water quality standards for surface waters forbid discharge of effluent that has the potential to cause toxic effects in the receiving waters. Many toxic pollutants cannot be measured by commonly available detection methods. However, laboratory tests can measure toxicity directly by exposing living organisms to the wastewater and measuring their responses. These tests measure the aggregate toxicity of the whole effluent, so this approach is called whole effluent toxicity (WET) testing. Some WET tests measure acute toxicity and other WET tests measure chronic toxicity.

- *Acute toxicity tests measure mortality as the significant response* to the toxicity of the effluent. Dischargers who monitor their wastewater with acute toxicity tests find early indications of any potential lethal effect of the effluent on organisms in the receiving water.
- *Chronic toxicity tests measure various sublethal toxic responses*, such as reduced growth or reproduction. Chronic toxicity tests often involve either a complete life cycle test on an organism with an extremely short life cycle, or a partial life cycle test during a critical stage of a test organism's life. Some chronic toxicity tests also measure organism survival.

Laboratories accredited by Ecology for WET testing know how to use the proper WET testing protocols, fulfill the data requirements, and submit results in the correct reporting format. Accredited laboratory staff know about WET testing and how to calculate an NOEC, LC50, EC50, IC25, etc. Ecology gives all accredited labs the most recent version of Ecology Publication No. WQ-R-95-80, *Laboratory Guidance and Whole Effluent Toxicity Test Review Criteria* (https://fortress.wa.gov/ecy/publications/SummaryPages/9580.html), which is referenced in the permit. Ecology recommends that King County send a copy of the acute or chronic toxicity sections(s) of its NPDES permit to the laboratory.

WET testing conducted during previous permit terms showed no reasonable potential for effluent discharges to cause receiving water acute or chronic toxicity. The proposed permit will not include WET limits. King County must retest the effluent before submitting an application for permit renewal.

- If this facility makes process or material changes which, in Ecology's opinion, increase the potential for effluent toxicity, then Ecology may (in a regulatory order, by permit modification, or in the permit renewal) require the facility to conduct additional effluent

characterization. King County may demonstrate to Ecology that effluent toxicity has not increased by performing additional WET testing and/or chemical analyses after the process or material changes have been made. Ecology recommends that the Permittee check with it first to make sure that Ecology will consider the demonstration adequate to support a decision to not require an additional effluent characterization.

- If WET testing conducted for submittal with a permit application fails to meet the performance standards in WAC 173-205-020, Ecology will assume that effluent toxicity has increased.

K. Groundwater quality limits

The groundwater quality standards (chapter 173-200 WAC) protect beneficial uses of groundwater. Permits issued by Ecology must not allow violations of those standards (WAC 173-200-100).

The South Plant WWTP does not discharge wastewater to the ground under this NPDES permit, therefore no permit limits are required to protect groundwater. Groundwater impacts will be addressed in the facility's reclaimed water permit.

L. Comparison of effluent limits with the previous permit

For marine outfall 001, the proposed limits are the same as those in the 2009 permit except as listed in Table 19.

Table 19. Comparison of Previous and Proposed Effluent Limits for Outfall 001

		Previous Effluent Limits		Proposed Effluent Limits	
Parameter	**Basis of Limit**	**Average Monthly**	**Average Weekly**	**Average Monthly**	**Average Weekly**
BOD_5	Technology	30 mg/L 36,000 lbs/day	45 mg/L 54,000 lbs/day	None - replaced with $CBOD_5$ limits	
$CBOD_5$	Technology	none		25 mg/L 30,000 lbs/day	40 mg/L 48,000 lbs/day

IV. Monitoring Requirements

Ecology requires monitoring, recording, and reporting (WAC 173-220-210 and 40 CFR 122.41) to verify that the treatment process is functioning correctly and that the discharge complies with the permit's effluent limits.

If a facility uses a contract laboratory to monitor wastewater, it must ensure that the laboratory uses the methods and meets or exceeds the method detection levels required by the permit. The permit describes when facilities may use alternative methods. It also describes what to do in certain situations when the laboratory encounters matrix effects. When a facility uses an alternative method as allowed by the permit, it must report the test method, detection level (DL), and quantitation level (QL) on the discharge monitoring report or in the required report.

A. Wastewater monitoring

The monitoring schedule is detailed in the proposed permit under Special Condition S.2. Specified monitoring frequencies take into account the quantity and variability of the discharge, the treatment method, past compliance, significance of pollutants, and cost of monitoring. The required monitoring frequency is generally consistent with agency guidance given in the current version of Ecology's *Permit Writer's Manual* (Publication Number 92-09) for municipal activated sludge facilities with design flows greater than 5 MGD.

King County requested a reduction in monitoring frequency for fecal coliform from 7 times each week to 4 times each week. Consistent with Ecology's *Permit Writers' Manual,* Ecology used EPA guidance (EPA memorandum from Robert Perciasepe and Steven A. Herman to Regional Administrators, April 1996), to assess data from the past two years for treatment plant reliability and data consistency and concluded that a reduction in monitoring frequency to 5 times each week for fecal coliform is warranted. The analysis is summarized in Appendix E.

Permittees receiving monitoring frequency reductions are still expected to take all appropriate measures to minimize pollutants levels as well as to minimize variability (variance), regardless of any reductions in monitoring frequencies granted from the baseline levels. To remain eligible for these reductions, the permittee may not have any violations for effluent limitations of the parameters for which reductions have been granted or failure to submit DMRs, or may not be subject to a new formal enforcement action. For facilities that do not maintain performance levels, Ecology may require increased monitoring by minor permit modification or Administrative Order. Permittees should also be aware that the probability of reporting a violation increases as the monitoring frequency decreases due to a smaller sample set from which to calculate weekly and monthly geometric mean values.

Ecology included additional nutrient monitoring in the proposed permit. Ecology will use this data if a TMDL is developed for dissolved oxygen; such a TMDL will likely establish waste load allocations for nutrients.

Monitoring of biosolids quantity and quality is necessary to determine the appropriate uses of the biosolids. Biosolids monitoring is required by the current state and local solid waste management program and also by EPA under 40 CFR 503.

As a pretreatment publicly owned treatment works (POTW), King County is required to sample influent, primary clarifier effluent, final effluent, and biosolids for toxic pollutants in order to characterize the industrial input. Sampling is also done to determine if pollutants interfere with the treatment process or pass-through the plant to the biosolids or the receiving water. King County will use the monitoring data to develop local limits which commercial and industrial users must meet.

The proposed permit requires King County to monitor for sediments, whole effluent toxicity, and priority pollutants to further characterize the discharges. These pollutants could have a significant impact on the quality of the surface water.

B. Lab accreditation

Ecology requires that facilities must use a laboratory registered or accredited under the provisions of chapter 173-50 WAC, *Accreditation of Environmental Laboratories*, to prepare all monitoring data (with the exception of certain parameters). Ecology accredited the

laboratory at this facility for General Chemistry and Microbiology, as listed in Table 20. The County's environmental lab at W. Ewing Street is additionally accredited for trace metals by ICP-OES and ICP-MS, mercury, inorganics, organics by GC and GC-MS, bioassays, and microbiology in matrices including liquids, sediments, and tissues.

Table 20. Lab Accredited Parameters

Parameter Name	Analyte ID	Method Name	Method Code
Solids, Total Volatile	1970	EPA 160.4_1971	10010409
Turbidity	2055	SM 2130 B-01	20048219
Alkalinity	1505	SM 2320 B-97	20045607
Hardness, Total (as CaCO3)	1755	SM 2340 C-97	20047603
Specific Conductance	1610	SM 2510 B-97	20048606
Solids, Total	1950	SM 2540 B-97	20049405
Solids, Total Dissolved	1955	SM 2540 C-97	20050402
Solids, Total Suspended	1960	SM 2540 D-97	20051201
Chlorine (Residual), Total	1940	SM 4500-Cl D-00	20080108
Chlorine (Residual), Total	1940	SM 4500-Cl G-00	20081612
pH	1900	SM 4500-H+ B-00	20105219
Ammonia	1515	SM 4500-NH3 F-97	20023556
Nitrite	1835	SM 4500-NO2^{-} B-00	20113104
Nitrate	1805	SM 4500-NO3^{-} F-00	20117617
Nitrate + Nitrite	1820	SM 4500-NO3^{-} F-00	20117617
Nitrogen, Total Kjeldahl	1795	SM 4500-Norg B-97	20119204
Dissolved Oxygen	1880	SM 4500-O G-01	20121408
Orthophosphate	1870	SM 4500-P F-99	20125013
Phosphorus, total	1910	SM 4500-P F-99	20125013
Biochemical Oxygen Demand (BOD)	1530	SM 5210 B-01	20135006
Chemical Oxygen Demand (COD)	1565	SM 5220 D-97	20136805
Total coliforms-count	2500	SM 9222 B (M-endo)-97	20203207
Fecal coliform-count	2530	SM 9222 D (m-FC)-97	20210008

V. Other Permit Conditions

A. Reporting and record keeping

Ecology based Special Condition S3 on its authority to specify any appropriate reporting and record keeping requirements to prevent and control waste discharges (WAC 173-220-210).

B. Prevention of facility overloading

Overloading of the treatment plant is a violation of the terms and conditions of the permit. To prevent this from occurring, RCW 90.48.110 and WAC 173-220-150 require King County to:

- Take the actions detailed in proposed permit Special Condition S4.
- Design and construct expansions or modifications before the treatment plant reaches existing capacity.
- Report and correct conditions that could result in new or increased discharges of pollutants.

Special Condition S4 restricts the amount of flow.

If a municipality intends to apply for Ecology-administered funding for the design or construction of a facility project, the plan must meet the standard of a "Facility Plan", as defined in WAC 173-98-030. A complete "Facility Plan" includes all elements of an "Engineering Report" along with State Environmental Review Process (SERP) documentation to demonstrate compliance with 40 CFR 35.3140 and 40 CFR 35.3145, and a cost effectiveness analysis as required by WAC 173-98-730. The municipality should contact Ecology's regional office as early as practical before planning a project that may include Ecology-administered funding.

C. Operation and maintenance

The proposed permit contains Special Condition S5 as authorized under RCW 90.48.110, WAC 173-220-150, chapter 173-230 WAC, and WAC 173-240-080. Ecology included it to ensure proper operation and regular maintenance of equipment, and to ensure that King County takes adequate safeguards so that it uses constructed facilities to their optimum potential in terms of pollutant capture and treatment.

D. Pretreatment

Duty to enforce discharge prohibitions

This provision prohibits the publicly owned treatment works (POTW) from authorizing or permitting an industrial discharger to discharge certain types of waste into the sanitary sewer.

- The first section of the pretreatment requirements prohibits the POTW from accepting pollutants which causes "pass-through" or "interference". This general prohibition is from 40 CFR §403.5(a). Appendix C of this fact sheet defines these terms.
- The second section reinforces a number of specific state and federal pretreatment prohibitions found in WAC 173-216-060 and 40 CFR §403.5(b). These reinforce that the POTW may not accept certain wastes, which:
    a. Are prohibited due to dangerous waste rules.
    b. Are explosive or flammable.
    c. Have too high or low of a pH (too corrosive, acidic or basic).
    d. May cause a blockage such as grease, sand, rocks, or viscous materials.
    e. Are hot enough to cause a problem.
    f. Are of sufficient strength or volume to interfere with treatment.
    g. Contain too much petroleum-based oils, mineral oil, or cutting fluid.
    h. Create noxious or toxic gases at any point.

40 CFR Part 403 contains the regulatory basis for these prohibitions, with the exception of the pH provisions which are based on WAC 173-216-060.

- The third section of pretreatment conditions reflects state prohibitions on the POTW accepting certain types of discharges unless the discharge has received prior written authorization from Ecology. These discharges include:
    a. Cooling water in significant volumes.

b. Stormwater and other direct inflow sources.

c. Wastewaters significantly affecting system hydraulic loading, which do not require treatment.

Ecology delegated authority to King County for permitting, monitoring, and enforcement over industrial users discharging to their treatment system to provide more direct and effective control of pollutants. Ecology oversees the delegated Industrial Pretreatment Program to assure compliance with federal pretreatment regulations (40 CFR Part 403) and categorical standards and state regulations (chapter 90.48 RCW and chapter 173-216 WAC).

E. Solid wastes

To prevent water quality problems the facility is required in permit Special Condition S7 to store and handle all residual solids (grit, screenings, scum, sludge, and other solid waste) in accordance with the requirements of RCW 90.48.080 and state water quality standards.

The final use and disposal of biosolids from this facility is regulated by U.S. EPA under 40 CFR 503, and by Ecology under chapter 70.95J RCW, chapter 173-308 WAC *Biosolids Management*, and chapter 173-350 WAC *Solid Waste Handling Standards*. The disposal of other solid waste is under the jurisdiction of Public Health – Seattle and King County.

Requirements for monitoring biosolids and record keeping are included in this permit. Ecology will use this information, required under 40 CFR 503, to develop or update local limits.

F. Spill plan

This facility stores a quantity of chemicals on-site that have the potential to cause water pollution if accidentally released. Ecology can require a facility to develop best management plans to prevent this accidental release [Section 402(a)(1) of the Federal Water Pollution Control Act (FWPCA) and RCW 90.48.080].

King County developed a plan for preventing the accidental release of pollutants to state waters and for minimizing damages if such a spill occurs. The proposed permit requires the facility to update this plan as needed.

G. General conditions

Ecology bases the standardized General Conditions on state and federal law and regulations. They are included in all individual domestic wastewater NPDES permits issued by Ecology.

VI. Permit Issuance Procedures

A. Permit modifications

Ecology may modify this permit to impose numerical limits, if necessary to comply with water quality standards for surface waters, with sediment quality standards, or with water quality standards for groundwaters, based on new information from sources such as inspections, effluent monitoring, outfall studies, and effluent mixing studies.

Ecology may also modify this permit to comply with new or amended state or federal regulations.

B. Proposed permit issuance

This proposed permit meets all statutory requirements for Ecology to authorize a wastewater discharge. The permit includes limits and conditions to protect human health and aquatic life, and the beneficial uses of waters of the state of Washington. Ecology proposes to issue this permit for a term of 5 years.

VII. References for Text and Appendices

Ecology, December 2011. *Permit Writer's Manual*. Publication Number 92-109 (https://fortress.wa.gov/ecy/publications/SummaryPages/92109.html)

Ecology, October 2010 (revised). *Water Quality Program Guidance Manual – Procedures to Implement the State's Temperature Standards through NPDES Permits*. Publication Number 06-10-100 (https://fortress.wa.gov/ecy/publications/summarypages/0610100.html)

Ecology, Laws and Regulations (http://www.ecy.wa.gov/laws-rules/index.html)

Ecology, Permit and Wastewater Related Information (http://www.ecy.wa.gov/programs/wq/permits/guidance.html)

EPA, 1992. National Toxics Rule. Federal Register, V. 57, No. 246, Tuesday, December 22, 1992.

EPA, 1991. *Technical Support Document for Water Quality-based Toxics Control*. EPA/505/2-90-001.

EPA, 1985. *Water Quality Assessment: A Screening Procedure for Toxic and Conventional Pollutants in Surface and Ground Water*. EPA/600/6-85/002a.

EPA, 1983. *Water Quality Standards Handbook*. USEPA Office of Water, Washington, D.C.

King County, September 2011. *Diving Inspection, Repair Work Order 2009, King County Contract Number C00398C08, Work Order No. 06- Renton Effluent Transfer System Outfall Inspections, August 29-30 and September 16, 2011*.

King County, *2013 Receiving Water Characterization Study, King County NPDES Monitoring Program, Final Report for Brightwater, South, Vashon, and West Point Treatment Plants and Alki, Carkeek, Elliott West, and Henderson/MLK CSO Storage and Treatment Facilities*, June 2013.

Water Pollution Control Federation, 1976. *Chlorination of Wastewater*.

Appendix A — Public Involvement Information

Ecology proposes to reissue a permit to King County's South Plant Wastewater Treatment Plant. The permit includes wastewater discharge limits and other conditions. This fact sheet describes the facility and Ecology's reasons for requiring permit conditions.

Ecology placed a Public Notice of Draft on April 16, 2015, in the *Seattle Times* to inform the public and to invite comment on the proposed draft National Pollutant Discharge Elimination System permit and fact sheet.

The notice:

- Told where copies of the draft permit and fact sheet were available for public evaluation (a local public library, the closest regional or field office, posted on our website).
- Offered to provide the documents in an alternate format to accommodate special needs.
- Asked people to tell us how well the proposed permit would protect the receiving water.
- Invited people to suggest fairer conditions, limits, and requirements for the permit.
- Invited comments on Ecology's determination of compliance with antidegradation rules.
- Urged people to submit their comments, in writing, before the end of the comment period.
- Told how to request a public hearing about the proposed NPDES permit.
- Explained the next step(s) in the permitting process.

Ecology has published a document entitled *Frequently Asked Questions about Effective Public Commenting*, which is available on our website at https://fortress.wa.gov/ecy/publications/SummaryPages/0307023.html.

You may obtain further information from Ecology by telephone, 425-649-7201, or by writing to the address listed below.

Water Quality Permit Coordinator
Department of Ecology
Northwest Regional Office
3190 160th Avenue SE
Bellevue, WA 98008-5452

The primary author of this permit and fact sheet is Alison Evans, P.E.

Appendix B — Your Right to Appeal

You have a right to appeal this permit to the Pollution Control Hearing Board (PCHB) within 30 days of the date of receipt of the final permit. The appeal process is governed by chapter 43.21B RCW and chapter 371-08 WAC. "Date of receipt" is defined in RCW 43.21B.001(2) (see glossary).

To appeal you must do the following within 30 days of the date of receipt of this permit:

- File your appeal and a copy of this permit with the PCHB (see addresses below). Filing means actual receipt by the PCHB during regular business hours.
- Serve a copy of your appeal and this permit on Ecology in paper form - by mail or in person. (See addresses below.) E-mail is not accepted.

You must also comply with other applicable requirements in chapter 43.21B RCW and chapter 371-08 WAC.

ADDRESS AND LOCATION INFORMATION

Street Addresses	Mailing Addresses
Department of Ecology Attn: Appeals Processing Desk 300 Desmond Drive SE Lacey, WA 98503	**Department of Ecology** Attn: Appeals Processing Desk PO Box 47608 Olympia, WA 98504-7608
Pollution Control Hearings Board 1111 Israel RD SW STE 301 Tumwater, WA 98501	**Pollution Control Hearings Board** PO Box 40903 Olympia, WA 98504-0903

Appendix C — Glossary

1-DMax or 1-day maximum temperature -- The highest water temperature reached on any given day. This measure can be obtained using calibrated maximum/minimum thermometers or continuous monitoring probes having sampling intervals of thirty minutes or less.

7-DADMax or 7-day average of the daily maximum temperatures -- The arithmetic average of seven consecutive measures of daily maximum temperatures. The 7-DADMax for any individual day is calculated by averaging that day's daily maximum temperature with the daily maximum temperatures of the three days prior and the three days after that date.

Acute toxicity -- The lethal effect of a compound on an organism that occurs in a short time period, usually 48 to 96 hours.

AKART -- The acronym for "all known, available, and reasonable methods of prevention, control and treatment." AKART is a technology-based approach to limiting pollutants from wastewater discharges, which requires an engineering judgment and an economic judgment. AKART must be applied to all wastes and contaminants prior to entry into waters of the state in accordance with RCW 90.48.010 and 520, WAC 173-200-030(2)(c)(ii), and WAC 173-216-110(1)(a).

Alternate point of compliance -- An alternative location in the groundwater from the point of compliance where compliance with the groundwater standards is measured. It may be established in the groundwater at locations some distance from the discharge source, up to, but not exceeding the property boundary and is determined on a site-specific basis following an AKART analysis. An "early warning value" must be used when an alternate point is established. An alternate point of compliance must be determined and approved in accordance with WAC 173-200-060(2).

Ambient water quality -- The existing environmental condition of the water in a receiving water body.

Ammonia -- Ammonia is produced by the breakdown of nitrogenous materials in wastewater. Ammonia is toxic to aquatic organisms, exerts an oxygen demand, and contributes to eutrophication. It also increases the amount of chlorine needed to disinfect wastewater.

Annual average design flow (AADF) -- The average of the daily flow volumes anticipated to occur over a calendar year.

Average monthly (intermittent) discharge limit -- The average of the measured values obtained over a calendar months time taking into account zero discharge days.

Average monthly discharge limit -- The average of the measured values obtained over a calendar month's time.

Background water quality -- The concentrations of chemical, physical, biological or radiological constituents or other characteristics in or of groundwater at a particular point in time upgradient of an activity that has not been affected by that activity [WAC 173-200-020(3)]. Background water quality for any parameter is statistically defined as the 95% upper tolerance interval with a 95% confidence based on at least eight hydraulically upgradient water quality samples. The eight samples are collected over a period of at least one year, with no more than one sample collected during any month in a single calendar year.

Best management practices (BMPs) -- Schedules of activities, prohibitions of practices, maintenance procedures, and other physical, structural and/or managerial practices to prevent or reduce the pollution of waters of the state. BMPs include treatment systems, operating procedures, and practices to control: plant site runoff, spillage or leaks, sludge or waste disposal, or drainage from raw material storage. BMPs may be further categorized as operational, source control, erosion and sediment control, and treatment BMPs.

BOD_5 -- Determining the five-day Biochemical Oxygen Demand of an effluent is an indirect way of measuring the quantity of organic material present in an effluent that is utilized by bacteria. The BOD5 is used in modeling to measure the reduction of dissolved oxygen in receiving waters after effluent is discharged. Stress caused by reduced dissolved oxygen levels makes organisms less competitive and less able to sustain their species in the aquatic environment. Although BOD_5 is not a specific compound, it is defined as a conventional pollutant under the federal Clean Water Act.

Bypass -- The intentional diversion of waste streams from any portion of a treatment facility.

Categorical pretreatment standards -- National pretreatment standards specifying quantities or concentrations of pollutants or pollutant properties, which may be discharged to a POTW by existing or new industrial users in specific industrial subcategories.

Chlorine -- A chemical used to disinfect wastewaters of pathogens harmful to human health. It is also extremely toxic to aquatic life.

Chronic toxicity -- The effect of a compound on an organism over a relatively long time, often 1/10 of an organism's lifespan or more. Chronic toxicity can measure survival, reproduction or growth rates, or other parameters to measure the toxic effects of a compound or combination of compounds.

Clean water act (CWA) -- The federal Water Pollution Control Act enacted by Public Law 92-500, as amended by Public Laws 95-217, 95-576, 96-483, 97-117; USC 1251 et seq.

Compliance inspection-without sampling -- A site visit for the purpose of determining the compliance of a facility with the terms and conditions of its permit or with applicable statutes and regulations.

Compliance inspection-with sampling -- A site visit for the purpose of determining the compliance of a facility with the terms and conditions of its permit or with applicable statutes and regulations. In addition it includes as a minimum, sampling and analysis for all parameters with limits in the permit to ascertain compliance with those limits; and, for municipal facilities, sampling of influent to ascertain compliance with the 85 percent removal requirement. Ecology may conduct additional sampling.

Composite sample -- A mixture of grab samples collected at the same sampling point at different times, formed either by continuous sampling or by mixing discrete samples. May be "time-composite" (collected at constant time intervals) or "flow-proportional" (collected either as a constant sample volume at time intervals proportional to stream flow, or collected by increasing the volume of each aliquot as the flow increased while maintaining a constant time interval between the aliquots).

Construction activity -- Clearing, grading, excavation, and any other activity, which disturbs the surface of the land. Such activities may include road building; construction of residential houses, office buildings, or industrial buildings; and demolition activity.

Continuous monitoring -- Uninterrupted, unless otherwise noted in the permit.

Critical condition -- The time during which the combination of receiving water and waste discharge conditions have the highest potential for causing toxicity in the receiving water environment. This situation usually occurs when the flow within a water body is low, thus, its ability to dilute effluent is reduced.

Date of receipt -- This is defined in RCW 43.21B.001(2) as five business days after the date of mailing; or the date of actual receipt, when the actual receipt date can be proven by a preponderance of the evidence. The recipient's sworn affidavit or declaration indicating the date of receipt, which is unchallenged by the agency, constitutes sufficient evidence of actual receipt. The date of actual receipt, however, may not exceed forty-five days from the date of mailing.

Detection limit -- The minimum concentration of a substance that can be measured and reported with 99 percent confidence that the pollutant concentration is above zero and is determined from analysis of a sample in a given matrix containing the pollutant.

Dilution factor (DF) -- A measure of the amount of mixing of effluent and receiving water that occurs at the boundary of the mixing zone. Expressed as the inverse of the percent effluent fraction, for example, a dilution factor of 10 means the effluent comprises 10% by volume and the receiving water 90%.

Distribution uniformity -- The uniformity of infiltration (or application in the case of sprinkle or trickle irrigation) throughout the field expressed as a percent relating to the average depth infiltrated in the lowest one-quarter of the area to the average depth of water infiltrated.

Early warning value -- The concentration of a pollutant set in accordance with WAC 173-200-070 that is a percentage of an enforcement limit. It may be established in the effluent, groundwater, surface water, the vadose zone or within the treatment process. This value acts as a trigger to detect and respond to increasing contaminant concentrations prior to the degradation of a beneficial use.

Enforcement limit -- The concentration assigned to a contaminant in the groundwater at the point of compliance for the purpose of regulation, [WAC 173-200-020(11)]. This limit assures that a groundwater criterion will not be exceeded and that background water quality will be protected.

Engineering report -- A document that thoroughly examines the engineering and administrative aspects of a particular domestic or industrial wastewater facility. The report must contain the appropriate information required in WAC 173-240-060 or 173-240-130.

Fecal coliform bacteria -- Fecal coliform bacteria are used as indicators of pathogenic bacteria in the effluent that are harmful to humans. Pathogenic bacteria in wastewater discharges are controlled by disinfecting the wastewater. The presence of high numbers of fecal coliform bacteria in a water body can indicate the recent release of untreated wastewater and/or the presence of animal feces.

Grab sample -- A single sample or measurement taken at a specific time or over as short a period of time as is feasible.

Groundwater -- Water in a saturated zone or stratum beneath the surface of land or below a surface water body.

Industrial user -- A discharger of wastewater to the sanitary sewer that is not sanitary wastewater or is not equivalent to sanitary wastewater in character.

Industrial wastewater -- Water or liquid-carried waste from industrial or commercial processes, as distinct from domestic wastewater. These wastes may result from any process or activity of industry, manufacture, trade or business; from the development of any natural resource; or from animal operations such as feed lots, poultry houses, or dairies. The term includes contaminated stormwater and, also, leachate from solid waste facilities.

Interference -- A discharge which, alone or in conjunction with a discharge or discharges from other sources, both:

- Inhibits or disrupts the POTW, its treatment processes or operations, or its sludge processes, use or disposal; and
- Therefore is a cause of a violation of any requirement of the POTW's NPDES permit (including an increase in the magnitude or duration of a violation) or of the prevention of biosolids use or disposal in compliance with the following statutory provisions and regulations or permits issued thereunder (or more stringent State or local regulations): Section 405 of the Clean Water Act, the Solid Waste Disposal Act (SWDA) (including title II, more commonly referred to as the Resource Conservation and Recovery Act (RCRA), and including State regulations contained in any State sludge management plan prepared pursuant to subtitle D of the SWDA), sludge regulations appearing in 40 CFR Part 507, the Clean Air Act, the Toxic Substances Control Act, and the Marine Protection, Research and Sanctuaries Act.

Local limits -- Specific prohibitions or limits on pollutants or pollutant parameters developed by a POTW.

Major facility -- A facility discharging to surface water with an EPA rating score of > 80 points based on such factors as flow volume, toxic pollutant potential, and public health impact.

Maximum daily discharge limit -- The highest allowable daily discharge of a pollutant measured during a calendar day or any 24-hour period that reasonably represents the calendar day for purposes of sampling. The daily discharge is calculated as the average measurement of the pollutant over the day.

Maximum day design flow (MDDF) -- The largest volume of flow anticipated to occur during a one-day period, expressed as a daily average.

Maximum month design flow (MMDF) -- The largest volume of flow anticipated to occur during a continuous 30-day period, expressed as a daily average.

Maximum week design flow (MWDF) -- The largest volume of flow anticipated to occur during a continuous 7-day period, expressed as a daily average.

Method detection level (MDL) -- See Detection Limit.

Minor facility -- A facility discharging to surface water with an EPA rating score of < 80 points based on such factors as flow volume, toxic pollutant potential, and public health impact.

Mixing zone -- An area that surrounds an effluent discharge within which water quality criteria may be exceeded. The permit specifies the area of the authorized mixing zone that Ecology defines following procedures outlined in state regulations (chapter 173-201A WAC).

National pollutant discharge elimination system (NPDES) -- The NPDES (Section 402 of the Clean Water Act) is the federal wastewater permitting system for discharges to navigable waters of the United States. Many states, including the state of Washington, have been delegated the authority to issue these permits. NPDES permits issued by Washington State permit writers are joint NPDES/State permits issued under both state and federal laws.

pH -- The pH of a liquid measures its acidity or alkalinity. It is the negative logarithm of the hydrogen ion concentration. A pH of 7 is defined as neutral and large variations above or below this value are considered harmful to most aquatic life.

Pass-through -- A discharge which exits the POTW into waters of the State in quantities or concentrations which, alone or in conjunction with a discharge or discharges from other sources, is a cause of a violation of any requirement of the POTW's NPDES permit (including an increase in the magnitude or duration of a violation), or which is a cause of a violation of State water quality standards.

Peak hour design flow (PHDF) -- The largest volume of flow anticipated to occur during a one-hour period, expressed as a daily or hourly average.

Peak instantaneous design flow (PIDF) -- The maximum anticipated instantaneous flow.

Point of compliance -- The location in the groundwater where the enforcement limit must not be exceeded and a facility must comply with the Ground Water Quality Standards. Ecology determines this limit on a site-specific basis. Ecology locates the point of compliance in the groundwater as near and directly downgradient from the pollutant source as technically, hydrogeologically, and geographically feasible, unless it approves an alternative point of compliance.

Potential significant industrial user (PSIU) --A potential significant industrial user is defined as an Industrial User that does not meet the criteria for a Significant Industrial User, but which discharges wastewater meeting one or more of the following criteria:

a. Exceeds 0.5 % of treatment plant design capacity criteria and discharges <25,000 gallons per day; or

b. Is a member of a group of similar industrial users which, taken together, have the potential to cause pass through or interference at the POTW (e.g. facilities which develop photographic film or paper, and car washes).

Ecology may determine that a discharger initially classified as a potential significant industrial user should be managed as a significant industrial user.

Quantitation level (QL) -- Also known as Minimum Level of Quantitation (ML) – The lowest level at which the entire analytical system must give a recognizable signal and acceptable calibration point for the analyte. It is equivalent to the concentration of the lowest calibration standard, assuming that the lab has used all method-specified sample weights, volumes, and cleanup procedures. The QL is calculated by multiplying the MDL by 3.18 and rounding the result to the number nearest to (1, 2, or 5) x 10^n, where n is an integer (64 FR 30417).
ALSO GIVEN AS:
The smallest detectable concentration of analyte greater than the Detection Limit (DL) where the accuracy (precision & bias) achieves the objectives of the intended purpose. (Report of the Federal Advisory Committee on Detection and Quantitation Approaches and Uses in

Clean Water Act Programs Submitted to the US Environmental Protection Agency, December 2007).

Reasonable potential -- A reasonable potential to cause a water quality violation, or loss of sensitive and/or important habitat.

Responsible corporate officer -- A president, secretary, treasurer, or vice-president of the corporation in charge of a principal business function, or any other person who performs similar policy- or decision-making functions for the corporation, or the manager of one or more manufacturing, production, or operating facilities employing more than 250 persons or have gross annual sales or expenditures exceeding $25 million (in second quarter 1980 dollars), if authority to sign documents has been assigned or delegated to the manager in accordance with corporate procedures (40 CFR 122.22).

Sample Maximum -- No sample may exceed this value.

Significant industrial user (SIU) --

1) All industrial users subject to Categorical Pretreatment Standards under 40 CFR 403.6 and 40 CFR Chapter I, Subchapter N; and

2) Any other industrial user that: discharges an average of 25,000 gallons per day or more of process wastewater to the POTW (excluding sanitary, noncontact cooling, and boiler blow-down wastewater); contributes a process wastestream that makes up 5 percent or more of the average dry weather hydraulic or organic capacity of the POTW treatment plant; or is designated as such by the Control Authority* on the basis that the industrial user has a reasonable potential for adversely affecting the POTW's operation or for violating any pretreatment standard or requirement [in accordance with 40 CFR 403.8(f)(6)].

   Upon finding that the industrial user meeting the criteria in paragraph 2, above, has no reasonable potential for adversely affecting the POTW's operation or for violating any pretreatment standard or requirement, the Control Authority* may at any time, on its own initiative or in response to a petition received from an industrial user or POTW, and in accordance with 40 CFR 403.8(f)(6), determine that such industrial user is not a significant industrial user.

   *The term "Control Authority" refers to the Washington State Department of Ecology in the case of non-delegated POTWs or to the POTW in the case of delegated POTWs.

Slug discharge -- Any discharge of a non-routine, episodic nature, including but not limited to an accidental spill or a non-customary batch discharge to the POTW. This may include any pollutant released at a flow rate that may cause interference or pass through with the POTW or in any way violate the permit conditions or the POTW's regulations and local limits.

Solid waste -- All putrescible and non-putrescible solid and semisolid wastes including, but not limited to, garbage, rubbish, ashes, industrial wastes, swill, sewage sludge, demolition and construction wastes, abandoned vehicles or parts thereof, contaminated soils and contaminated dredged material, and recyclable materials.

Soluble BOD_5 -- Determining the soluble fraction of Biochemical Oxygen Demand of an effluent is an indirect way of measuring the quantity of soluble organic material present in an effluent that is utilized by bacteria. Although the soluble BOD_5 test is not specifically

described in Standard Methods, filtering the raw sample through at least a 1.2 um filter prior to running the standard BOD_5 test is sufficient to remove the particulate organic fraction.

State waters -- Lakes, rivers, ponds, streams, inland waters, underground waters, salt waters, and all other surface waters and watercourses within the jurisdiction of the state of Washington.

Stormwater -- That portion of precipitation that does not naturally percolate into the ground or evaporate, but flows via overland flow, interflow, pipes, and other features of a stormwater drainage system into a defined surface water body, or a constructed infiltration facility.

Technology-based effluent limit -- A permit limit based on the ability of a treatment method to reduce the pollutant.

Total coliform bacteria -- A microbiological test, which detects and enumerates the total coliform group of bacteria in water samples.

Total dissolved solids -- That portion of total solids in water or wastewater that passes through a specific filter.

Total maximum daily load (TMDL) -- A determination of the amount of pollutant that a water body can receive and still meet water quality standards.

Total suspended solids (TSS) -- Total suspended solids is the particulate material in an effluent. Large quantities of TSS discharged to a receiving water may result in solids accumulation. Apart from any toxic effects attributable to substances leached out by water, suspended solids may kill fish, shellfish, and other aquatic organisms by causing abrasive injuries and by clogging the gills and respiratory passages of various aquatic fauna. Indirectly, suspended solids can screen out light and can promote and maintain the development of noxious conditions through oxygen depletion.

Upset -- An exceptional incident in which there is unintentional and temporary noncompliance with technology-based permit effluent limits because of factors beyond the reasonable control of the Permittee. An upset does not include noncompliance to the extent caused by operational error, improperly designed treatment facilities, lack of preventative maintenance, or careless or improper operation.

Water quality-based effluent limit -- A limit imposed on the concentration of an effluent parameter to prevent the concentration of that parameter from exceeding its water quality criterion after discharge into receiving waters.

Appendix D — Facility Data

South Plant Treatment Plant DMR Data, p1

Influent								
	BOD5, lbs/day		BOD5, mg/L		TSS, lbs/day		TSS, mg/L	
	Ave	Max Day	Ave	Max Day	Ave	Max Day	Ave	Max Day
1-Nov-09	175,786	211,308	223	352	169,848	246,943	208	324
1-Dec-09	183,306	332,985	266	424	159,913	231,832	232	370
1-Jan-10	168,147	241,798	215	351	155,202	330,664	198	480
1-Feb-10	164,761	m	244	312	151,071	m	225	396
1-Mar-10	179,039	249,166	272	385	180,583	315,826	275	488
1-Apr-10	167,946	246,263	261	379	165,768	450,433	255	670
1-May-10	165,624	230,106	276	388	150,474	198,081	251	334
1-Jun-10	166,440	261,358	254	389	154,447	252,623	235	376
1-Jul-10	170,141	222,879	295	368	153,959	201,308	268	380
1-Aug-10	182,458	290,225	318	492	167,765	249,779	292	452
1-Sep-10	177,641	332,704	299	598	154,554	218,094	259	392
1-Oct-10	179,208	223,214	276	357	170,304	227,171	260	338
1-Nov-10	194,124	273,729	263	405	170,560	241,413	229	352
1-Dec-10	175,762	241,760	208	324	180,904	299,403	207	348
1-Jan-11	204,352	293,586	232	411	217,739	386,978	241	524
1-Feb-11	180,070	345,932	234	365	166,165	390,476	215	412
1-Mar-11	179,000	224,735	205	277	189,251	263,765	215	286
1-Apr-11	173,917	205,417	213	275	190,296	285,424	233	362
1-May-11	167,428	204,613	243	292	176,745	311,720	255	422
1-Jun-11	170,413	338,452	303	612	177,232	461,223	315	834
1-Jul-11	154,978	211,984	308	405	143,322	229,257	285	438
1-Aug-11	145,016	215,236	295	432	151,940	251,493	310	500
1-Sep-11	156,338	193,614	278	345	167,313	222,235	298	396
1-Oct-11	158,597	227,512	258	381	153,671	193,605	250	310
1-Nov-11	161,977	332,784	243	329	156,607	440,299	231	356
1-Dec-11	148,584	195,328	222	279	150,383	201,949	225	308
1-Jan-12	167,679	222,817	199	291	161,236	215,670	192	308
1-Feb-12	161,548	394,229	191	395	150,204	204,434	179	220
1-Mar-12	155,921	268,615	171	352	164,060	240,672	178	254
1-Apr-12	145,377	211,446	186	293	160,490	259,798	206	360
1-May-12	158,915	257,584	225	364	155,573	277,124	218	388
1-Jun-12	160,285	230,916	228	358	156,971	314,764	223	450
1-Jul-12	145,938	196,237	236	300	161,321	270,776	258	384
1-Aug-12	141,345	247,545	231	399	159,390	217,334	261	356
1-Sep-12	175,722	319,701	282	512	185,307	387,138	298	620
1-Oct-12	197,141	304,342	310	460	183,482	250,089	287	378
1-Nov-12	214,482	301,129	292	405	193,361	275,598	261	356
1-Dec-12	203,348	275,843	219	323	200,959	346,657	216	360
1-Jan-13	182,552	258,445	243	314	194,018	325,381	257	420
1-Feb-13	163,418	190,017	249	314	163,181	204,786	247	314
1-Mar-13	188,925	283,645	287	386	172,661	239,882	264	368
1-Apr-13	187,747	237,920	262	350	204,029	315,923	284	444
1-May-13	169,832	231,505	283	399	204,938	308,674	342	532
1-Jun-13	202,850	269,575	342	444	203,550	269,195	345	476
1-Jul-13	216,794	322,387	376	494	196,005	313,603	341	552
1-Aug-13	216,566	260,021	373	451	178,790	212,416	308	368
1-Sep-13	213,021	329,739	346	536	197,869	439,650	317	527
1-Oct-13	191,616	251,976	294	363	198,353	300,526	304	482
1-Nov-13	213,018	258,867	324	405	204,517	312,442	310	432
1-Dec-13	170,975	250,344	283	421	173,736	275,682	288	464
1-Jan-14	184,916	237,451	285	383	179,512	263,822	274	338
1-Feb-14	222,114	311,698	300	502	194,514	334,934	258	436
1-Mar-14	180,805	319,387	202	290	190,746	335,141	212	396
1-Apr-14	213,848	269,082	310	399	177,724	385,088	249	304
1-May-14	203,296	260,502	310	430	191,069	273,211	291	378
1-Jun-14	205,529	262,273	377	489	213,783	320,735	392	598
1-Jul-14	189,979	241,744	374	464	198,475	373,434	392	735
AVE:	178,887	261,137	268	390	175,366	288,689	262	418
MIN:	141,345	190,017	171	275	143,322	193,605	178	220
MAX:	222,114	394,229	377	612	217,739	461,223	392	834
5th %tile:								
95th %tile:								
85%	213,350				199,750			
Limits	251,000				235,000			

South Plant Treatment Plant DMR Data, p2

Effluent	Flow, MGD		BOD5, lbs/day		BOD5, mg/L		BOD5, % Removal	TSS, lbs/day		TSS, mg/L		TSS, % Removal	Fecal Coliform, #/100 ml		pH		Res. Chlorine, mg/L		TKN, mg/L as N		Ammonia, lbs/day		Ammonia, mg/L		Nitrate+ Nitrite, mg/L as N		Ortho Phos, mg/L as P		Total Phos, mg/L as P		Temp, deg C	
	Ave	Max Day	Mnth Ave	Wk Ave	Mnth Ave	Wkly Ave	Ave	Mnth Ave	Wk Ave	Mnth Ave	Wk Ave	Ave	GEM	GM7	max	min	Mnth Ave	Max Day	Mnth Ave	Max Day	Mnth Ave	Max Day	Mnth Ave	Max Day	Mnth Ave	Max Day	Mnth Ave	Max Day	Mnth Ave	Max Day	Ave	Max
1-Nov-09	96	141	17055	20190	22	25	90	9081	10107	11	12	95	90	205	7.1	6.3	0.05	0.05	28	39	18,168	22,819	25	37	1.8	2.1	1.8	2.1	2.4	3.1		
1-Dec-09	78	108	18322	20380	28	30	90	11718	13476	18	19	93	106	143	7.4	6.8	0.05	0.05	32	37	17,834	19,517	28	33	1.4	2.8	1.5	1.7	2.0	2.4	15.3	16.1
1-Jan-10	92	134	13746	15453	18	21	92	11265	13141	15	17	92	61	80	7.4	7.0	0.06	0.31	30	37	18,716	23,068	25	31	0.6	1.5	1.1	1.3	1.7	1.9	14.2	14.9
1-Feb-10	76	95	12354	13516	20	22	92	9312	10557	15	17	94	78	96	7.4	6.9	0.11	0.05	33	39	18,709	20,573	30	34	0.7	0.8	1.2	1.5	1.8	2.3	14.9	15.4
1-Mar-10	75	108	13239	14477	21	21	93	11023	16798	18	23	94	51	94	7.3	7.0	0.05	0.05	35	41	18,741	22,483	31	37	0.8	1.3	1.5	1.5	2.3	2.9	15.9	15.3
1-Apr-10	72	90	10892	13737	18	24	94	12039	12680	20	21	92	81	197	7.2	6.0	0.05	0.05	34	41	18,342	21,426	31	37	0.1	0.2	1.8	2.4	3.0	6.3	15.7	16.4
1-May-10	65	78	10077	10409	19	19	94	8663	11825	16	22	94	65	104	6.8	6.4	0.05	0.05	38	45	18,144	20,831	34	39	0.5	0.6	1.9	2.3	2.5	2.9	17.0	17.6
1-Jun-10	73	91	12343	16559	20	26	93	9957	12076	16	19	94	135	187	6.8	6.5	0.05	0.05	35	43	17,907	21,504	30	33	0.4	0.8	1.3	1.9	2.0	3.0	17.9	18.9
1-Jul-10	63	69	8920	9930	17	20	95	5332	5753	10	11	96	127	272	7.2	6.3	0.05	0.05	31	41	14,208	16,958	27	33	3.8	4.6	1.5	1.6	1.7	2.4	20.0	20.1
1-Aug-10	63	67	6277	6930	12	13	96	5160	5969	10	12	97	66	109	7.3	6.9	0.05	0.05	26	33	11,346	15,975	22	29	6.1	8.4	2.5	5.1	3.2	5.7	21.3	22.1
1-Sep-10	67	86	6082	7517	11	14	96	4455	5016	8	9	97	32	57	7.2	6.4	0.05	0.07	17	32	8,068	15,145	15	28	8.6	12.6	3.9	5.4	4.6	6.7	21.1	21.4
1-Oct-10	73	106	9783	11457	16	17	95	5538	6181	9	10	97	17	26	7.1	6.4	0.06	0.07	22	33	11,606	17,176	18	29	5.9	14.2	2.6	4.4	2.7	4.7	19.6	20.6
1-Nov-10	84	114	11561	12503	16	16	94	6638	7132	9	9	96	76	108	7.2	6.9	0.05	0.05	26	30	15,389	19,480	21	26	1.9	3.6	0.4	0.5	0.8	1.0	17.4	18.3
1-Dec-10	105	235	14323	22730	16	17	92	9752	16627	11	12	95	65	263	7.2	6.1	0.05	0.11	24	33	18,484	22,738	22	29	1.6	3.6	2.1	3.6	2.0	3.9	15.1	16.4
1-Jan-11	108	159	15493	19285	18	19	92	14755	18750	16	18	93	34	59	7.6	6.9	0.05	0.05	26	31	18,803	21,156	23	28	0.5	0.8	1.4	2.0	1.6	2.2	13.9	14.7
1-Feb-11	86	111	13999	16210	19	22	92	10780	12662	15	16	93	43	63	8.0	6.9	0.05	0.15	33	43	20,228	22,115	28	33	0.8	1.6	1.1	1.3	1.7	1.9	14.4	17.6
1-Mar-11	101	156	13148	16472	15	21	93	14444	18056	17	18	92	20	32	7.6	6.6	0.05	0.11	28	34	20,948	26,987	25	31	0.5	0.5	1.1	1.5	1.7	2.2	13.7	14.4
1-Apr-11	94	147	10124	12971	13	14	94	10860	14070	14	15	94	33	79	7.5	6.6	0.05	0.13	30	37	20,065	23,115	27	33	0.4	0.6	1.2	1.5	1.7	2.0	14.6	15.8
1-May-11	77	126	10068	12907	16	17	94	7413	9948	11	13	96	51	67	7.5	7.0	0.05	0.05	34	42	19,679	25,361	30	38	0.7	1.2	2.0	2.9	2.4	3.2	16.2	17.1
1-Jun-11	61	66	10149	12009	20	24	94	5187	5631	10	11	97	22	47	7.5	6.7	0.05	0.09	29	34	12,378	14,742	24	29	4.6	5.5	2.1	2.4	2.5	3.2	18.2	19.1
1-Jul-11	56	60	10904	15119	23	32	93	4460	6187	9	13	97	31	48	7.5	6.6	0.05	0.16	19	30	6,837	11,182	15	24	9.3	15.5	2.2	3.5	2.4	4.0	19.9	20.9
1-Aug-11	53	68	5924	6922	13	15	96	4096	4849	9	11	97	27	65	7.6	6.5	0.05	0.07	19	31	6,706	13,274	15	29	9.5	12.2	2.6	4.0	2.8	4.5	21.1	21.7
1-Sep-11	62	70	7339	7884	14	15	95	4621	6057	9	11	97	77	106	7.6	6.8	0.06	0.11	30	40	15,233	19,079	29	36	5.2	9.1	2.0	3.6	2.3	4.5	21.1	28.5
1-Oct-11	67	85	7269	7920	13	15	95	5334	6186	10	11	97	39	67	7.5	7.1	0.06	0.1	31	42	14,651	19,949	26	34	4.0	5.4	1.6	3.2	1.8	3.5	19.1	19.8
1-Nov-11	74	147	13394	23581	21	28	92	10295	21437	15	25	94	90	106	7.4	6.9	0.05	0.13	27	32	15,058	23,573	25	29	4.1	6.5	1.9	2.6	2.8	4.7	16.6	17.8
1-Dec-11	73	93	8280	11528	13	17	94	6876	8791	11	13	95	22	38	7.5	6.4	0.05	0.07	34	39	18,851	22,033	31	36	0.9	1.2	2.1	2.7	2.6	4.7	15.2	15.7
1-Jan-12	97	165	17706	24488	22	27	90	12085	18022	14	19	93	56	68	7.1	6.4	0.06	0.09	22	28	16,295	18,668	20	26	2.1	3.0	1.6	2.4	2.2	4.8	14.4	15.4
1-Feb-12	94	127	11135	15403	14	17	93	9074	10900	12	14	94	27	75	7.2	6.3	0.05	0.1	28	36	18,868	22,211	25	32	0.9	1.1	1.5	2.3	1.8	2.7	14.2	14.8
1-Mar-12	106	160	11753	18736	13	16	92	12429	19676	13	18	92	80	115	8.2	6.2	0.05	0.05	29	41	21,542	28,515	25	33	0.6	1.1	1.5	2.0	2.0	2.5	14.2	15.1
1-Apr-12	88	114	9349	14493	13	20	94	6304	7541	9	9	96	33	45	7.0	6.7	0.05	0.08	31	39	19,510	24,574	27	33	0.3	0.8	1.3	1.8	1.7	2.3	15.8	16.7
1-May-12	80	107	12404	16593	19	24	92	5929	6571	9	10	96	85	97	6.9	6.1	0.05	0.11	20	35	11,836	25,791	17	32	5.1	11.2	3.3	4.0	4.1	5.1	17.8	18.9
1-Jun-12	77	89	8194	11470	13	18	95	6227	8745	10	14	96	49	155	6.9	6.3	0.05	0.05	6	13	2,350	5,427	4	9	13.1	14.7	3.5	3.6	4.0	4.5	19.2	20.4
1-Jul-12	68	84	5315	6462	9	12	96	4101	4688	7	9	97	55	100	6.7	6.2	0.05	0.06	5	7.8	1,249	2,487	2	5	12.6	14.0	3.7	4.1	4.0	4.6	21.2	22.1
1-Aug-12	66	72	6643	10009	12	17	95	4276	5130	8	10	97	46	64	7.1	6.4	0.06	0.1	12	19	3,586	8,090	6	14	10.3	12.7	3.9	4.2	4.2	5.2	22.4	23.0
1-Sep-12	68	74	8585	9214	15	16	95	4573	5018	8	9	97	33	59	7.2	6.4	0.05	0.1	19	25	9,169	14,017	16	25	6.0	9.6	2.6	3.7	3.2	4.2	22.3	22.8
1-Oct-12	70	115	10873	15112	19	23	94	4345	5382	7	10	98	26	32	7.2	6.3	0.06	0.1	28	34	14,973	18,346	26	34	1.8	3.1	1.4	2.1	2.0	3.5	20.7	22.0
1-Nov-12	85	153	13296	14204	20	25	94	6040	9325	8	10	97	45	147	7.0	6.6	<.06	0.1	26	49	12,718	15,343	19	27	5.4	6.8	0.9	1.9	1.2	2.2	18.1	19.6
1-Dec-12	106	154	19456	27070	22	27	90	9965	15507	11	15	95	68	136	7.0	6.4	<.05	0.07	21	26	15,550	19,028	18	22	2.6	3.7	1.4	1.9	1.5	2.1	15.7	16.7
1-Jan-13	85	150	12720	15471	18	23	93	8585	10412	12	13	96	62	93	6.9	6.5	<.05	<.05	31	41	17,749	23,138	25	35	0.6	1.1	1.3	1.9	1.7	2.5	14.8	15.7
1-Feb-13	72	91	8820	9525	15	17	95	6382	7059	11	11	96	135	238	6.9	6.7	<.05	0.13	33	38	17,653	20,357	29	33	1.3	3.4	1.7	2.3	2.0	2.8	15.1	15.6
1-Mar-13	73	95	11587	13862	19	24	94	6887	7640	11	13	96	25	45	6.9	6.5	<.05	0.06	25	32	13,514	19,413	22	27	4.5	6.4	2.4	2.6	2.8	3.3	15.4	16.5
1-Apr-13	82	122	11288	12040	16	19	94	8240	9516	12	13	96	28	43	6.9	6.4	<.06	0.21	25	38	14,990	21,588	23	35	1.9	3.9	2.2	2.7	2.6	3.1	15.9	16.8
1-May-13	66	77	7217	10499	13	18	96	6104	7052	11	12	97	35	55	7.0	6.9	<.05	<.05	41	48	21,277	25,087	38	45	0.2	0.2	1.8	3.1	2.4	3.7	18.1	18.8
1-Jun-13	65	71	9891	16012	18	28	95	5296	7201	10	13	97	25	45	7.1	6.5	<.05	0.13	31	50	13,878	23,006	26	42	3.4	7.6	2.9	3.8	3.5	4.5	20.1	22.1
1-Jul-13	63	73	11008	15203	21	29	95	8231	11895	16	23	96	33	74	6.8	6.2	<.05	0.09	11	20	3,606	7,345	7	14	15.6	16.4	3.6	4.0	4.6	5.4	21.9	22.8
1-Aug-13	64	75	6447	8335	12	16	97	4270	4274	8	8	98	17	21	6.7	6.0	<.05	0.07	4	7.3	387	1,339	1	3	15.6	17.7	3.9	4.4	4.4	4.8	22.9	23.3
1-Sep-13	69	113	8512	11946	14	20	96	5211	6748	9	11	97	55	123	9.0	6.2	<.05	0.09	5	9.4	1,312	4,920	2	6	14.7	17.3	3.4	4.0	4.2	5.0	22.3	23.2
1-Oct-13	69	95	15938	20544	28	38	92	6038	7844	11	11	97	159	267	7.1	6.2	<.05	0.16	25	36	12,338	18,864	22	34	5.9	13.7	1.7	2.6	2.1	3.2	19.8	20.5
1-Nov-13	69	92	6375	8036	11	14	97	6621	7480	12	13	97	19	31	7.1	6.6	<.05	0.07	26	37	13,442	18,295	23	34	3.9	7.2	1.2	1.7	1.4	2.1	18.2	19.2
1-Dec-13	64	80	6242	6700	12	13	96	5944	6548	11	13	96	47	91	7.2	6.8	<.05	<.05	42	47	18,949	22,425	36	42	0.2	0.2	1.1	1.5	1.7	2.0	16.2	16.7
1-Jan-14	72	107	10488	13239	17	20	94	6650	9484	11	15	96	44	60	7.0	6.6	<.05	<.05	35	50	17,568	22,220	30	39	0.8	2.0	0.5	0.7	1.1	1.7	15.3	15.7
1-Feb-14	86	158	16731	23519	23	34	92	8764	12620	12	14	96	47	72	6.9	6.4	<.06	0.12	24	32	13,521	18,124	20	29	2.3	5.2	0.6	1.5	1.1	2.0	14.1	14.7
1-Mar-14	104	164	10187	13374	12	13	95	7055	8780	8	9	96	25	42	7.0	6.4	<.06	0.3	23	29	17,541	21,329	21	25	0.8	2.1	0.9	1.4	1.4	2.1	14.4	16.0
1-Apr-14	76	106	12732	18619	20	26	94	5171	6747	8	9	97	62	154	7.0	6.2	<.07	0.36	22	33	11,633	19,180	18	31	7.5	16.8	2.4	3.3	2.8	4.0	16.1	17.1
1-May-14	73	103	8067	10052	13	16	96	4768	5511	8	9	97	17	57	7.0	6.3	<.06	0.15	20	32	10,289	13,640	16	24	7.6	10.6	2.3	2.4	2.8	3.5	18.1	19.3
1-Jun-14	59	63	7307	10949	15	22	96	5391	8428	11	17	97	49	74	7.0	6.3	<.05	0.14	15	36	5,197	12,059	11	24	12.1	15.5	2.6	3.2	3.1	4.2	20.2	21.3
1-Jul-14	56	70	4517	5054	10	11	98	3237	4280	7	9	98	48	62	7.2	6.3	<.06	0.16	13	21	4,400	7,641	10	16	12.5	16.9	2.7	3.6	2.4	3.7	22.1	22.7
AVE:	77	107	10734	13769	17	20	94	7425	9579	11	14	96	54	96	7.2	6.5	0.05	0.10	25	34	13,895	18,329	22	29	4.3	6.4	2.0	2.7	2.4	3.5	17.6	18.6
MIN:	53	60	4517	5054	9	11	90	3237	4274	7	8	92	17	21	6.7	6.0	0.05	0.05	4	7	387	1,339	1	3	0.1	0.2	0.4	0.5	0.8	1.0	13.7	14.4
MAX:	108	235	19456	27070	28	38	98	14755	21437	20	25	98	159	272	9.0	7.1	0.11	0.36	42	50	21,542	28,515	38	45	16	18	3.9	5.4	4.6	6.7	22.9	28.5
5th %tile:													18.6																			
95th %tile:														243				0.25						40							22.3	
85%	122																															
Limits	144		36,000	54,000	30	45	85	36,000	54,000	30	45	85	200	400	6.0	9.0	0.50	0.75														
																	cv=	0.63														

Exceeds Permit Limit

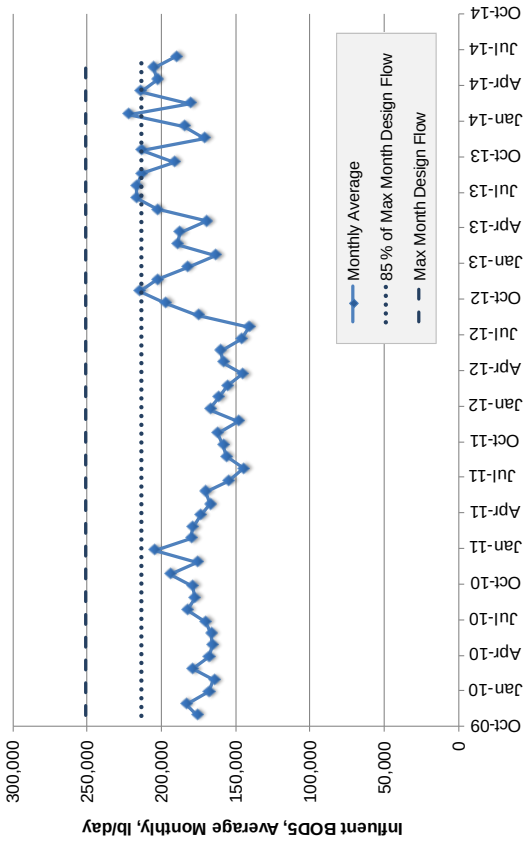
Influent BOD5, Average Monthly, lb/day
300,000
250,000
200,000
150,000
100,000
50,000
0
Oct-09
Jan-10
Apr-10
Jul-10
Oct-10
Jan-11
Apr-11
Jul-11
Oct-11
Jan-12
Apr-12
Jul-12
Oct-12
Jan-13
Apr-13
Jul-13
Oct-13
Jan-14
Apr-14
Jul-14
Oct-14
Monthly Average
85 % of Max Month Design Flow
Max Month Design Flow

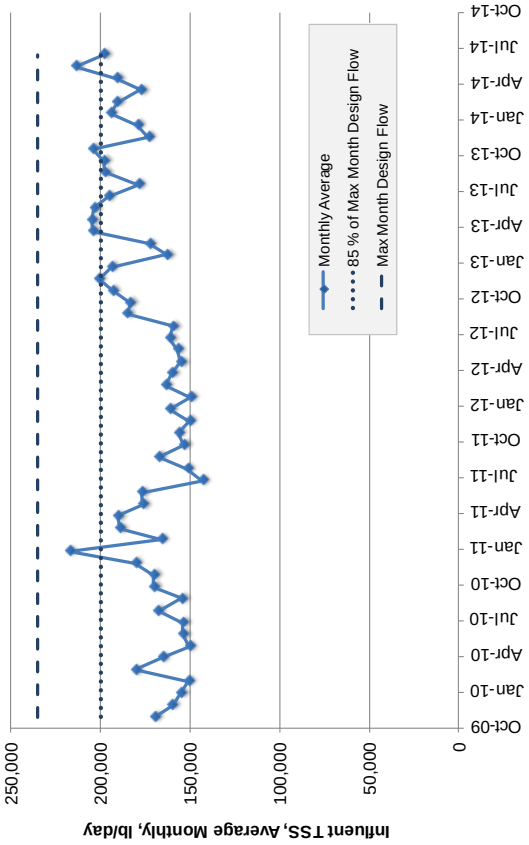
Influent TSS, Average Monthly, lb/day
250,000
200,000
150,000
100,000
50,000
0
Oct-09
Jan-10
Apr-10
Jul-10
Oct-10
Jan-11
Apr-11
Jul-11
Oct-11
Jan-12
Apr-12
Jul-12
Oct-12
Jan-13
Apr-13
Jul-13
Oct-13
Jan-14
Apr-14
Jul-14
Oct-14
Monthly Average
85 % of Max Month Design Flow
Max Month Design Flow

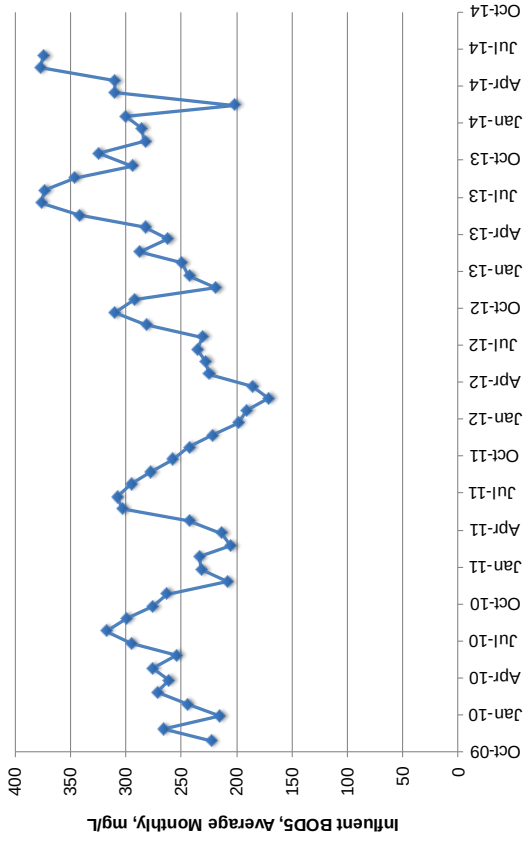
Influent BOD5, Average Monthly, mg/L
400
350
300
250
200
150
100
50
0
Oct-09
Jan-10
Apr-10
Jul-10
Oct-10
Jan-11
Apr-11
Jul-11
Oct-11
Jan-12
Apr-12
Jul-12
Oct-12
Jan-13
Apr-13
Jul-13
Oct-13
Jan-14
Apr-14
Jul-14
Oct-14

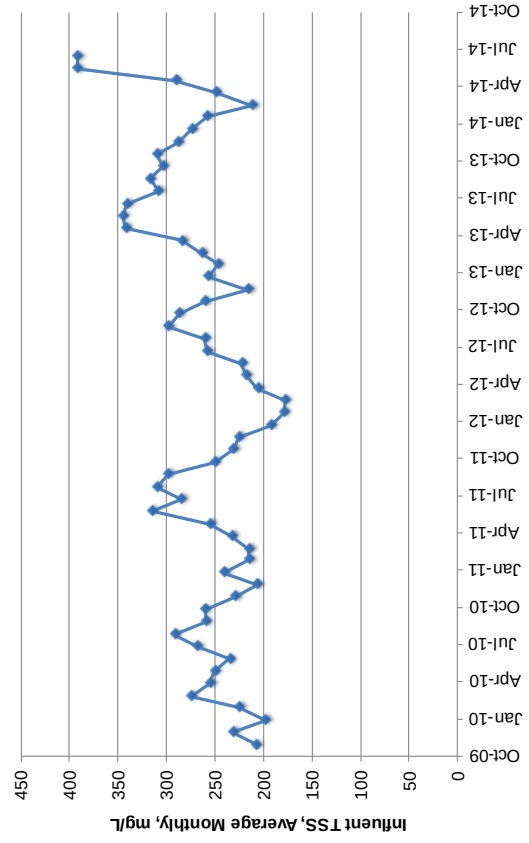
Influent TSS, Average Monthly, mg/L
450
400
350
300
250
200
150
100
50
0
Oct-09
Jan-10
Apr-10
Jul-10
Oct-10
Jan-11
Apr-11
Jul-11
Oct-11
Jan-12
Apr-12
Jul-12
Oct-12
Jan-13
Apr-13
Jul-13
Oct-13
Jan-14
Apr-14
Jul-14
Oct-14

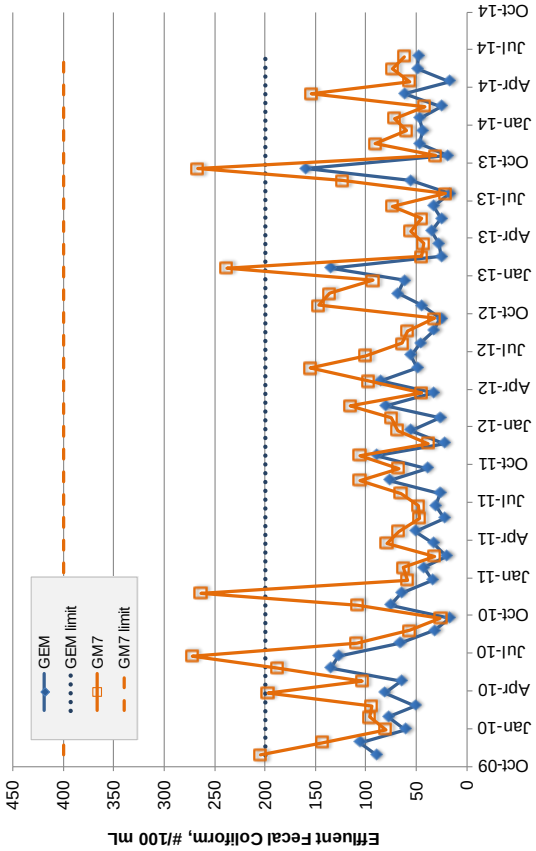
Effluent Fecal Coliform, #/100 mL
450
400
350
300
250
200
150
100
50
0
GEM
GEM limit
GM7
GM7 limit
Oct-09
Jan-10
Apr-10
Jul-10
Oct-10
Jan-11
Apr-11
Jul-11
Oct-11
Jan-12
Apr-12
Jul-12
Oct-12
Jan-13
Apr-13
Jul-13
Oct-13
Jan-14
Apr-14
Jul-14
Oct-14

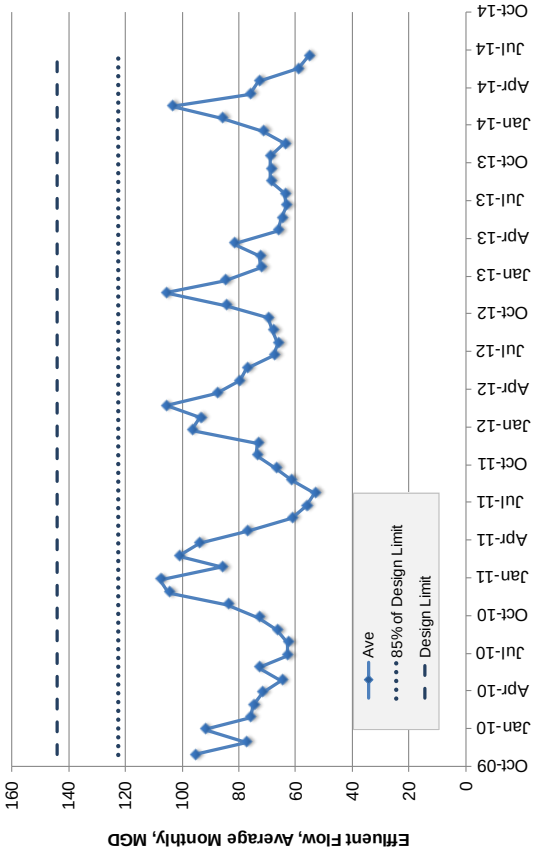
Effluent Flow, Average Monthly, MGD
160
140
120
100
80
60
40
20
0
Ave
85% of Design Limit
Design Limit
Oct-09
Jan-10
Apr-10
Jul-10
Oct-10
Jan-11
Apr-11
Jul-11
Oct-11
Jan-12
Apr-12
Jul-12
Oct-12
Jan-13
Apr-13
Jul-13
Oct-13
Jan-14
Apr-14
Jul-14
Oct-14

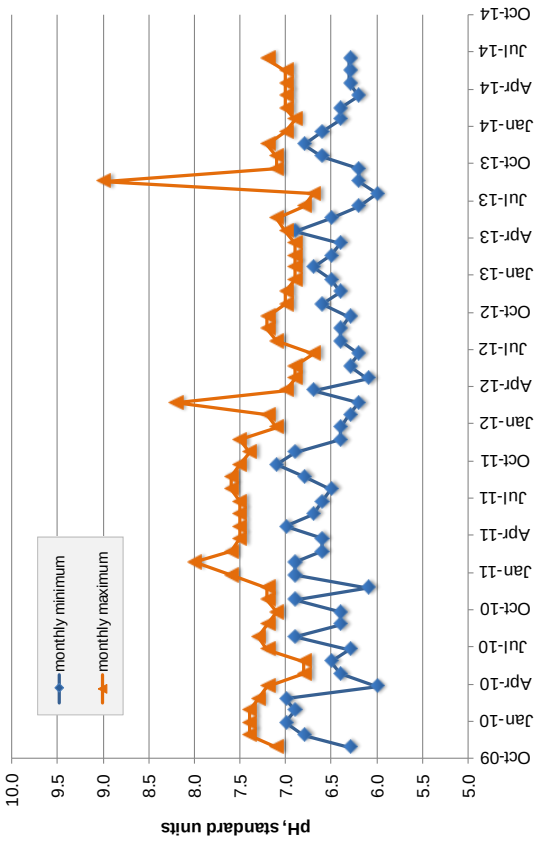
pH, standard units
10.0
9.5
9.0
8.5
8.0
7.5
7.0
6.5
6.0
5.5
5.0
monthly minimum
monthly maximum
Oct-09
Jan-10
Apr-10
Jul-10
Oct-10
Jan-11
Apr-11
Jul-11
Oct-11
Jan-12
Apr-12
Jul-12
Oct-12
Jan-13
Apr-13
Jul-13
Oct-13
Jan-14
Apr-14
Jul-14
Oct-14

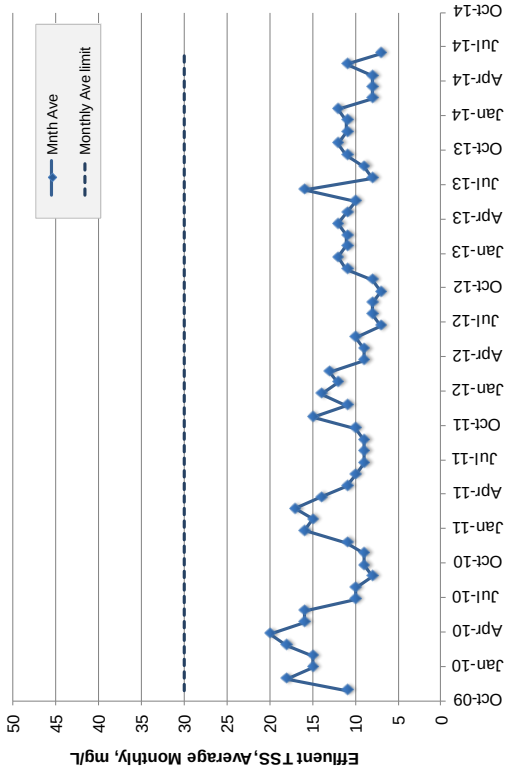
Effluent TSS, Average Monthly, mg/L
Mnth Ave
Monthly Ave limit
0
5
10
15
20
25
30
35
40
45
50
Oct-09
Jan-10
Apr-10
Jul-10
Oct-10
Jan-11
Apr-11
Jul-11
Oct-11
Jan-12
Apr-12
Jul-12
Oct-12
Jan-13
Apr-13
Jul-13
Oct-13
Jan-14
Apr-14
Jul-14
Oct-14

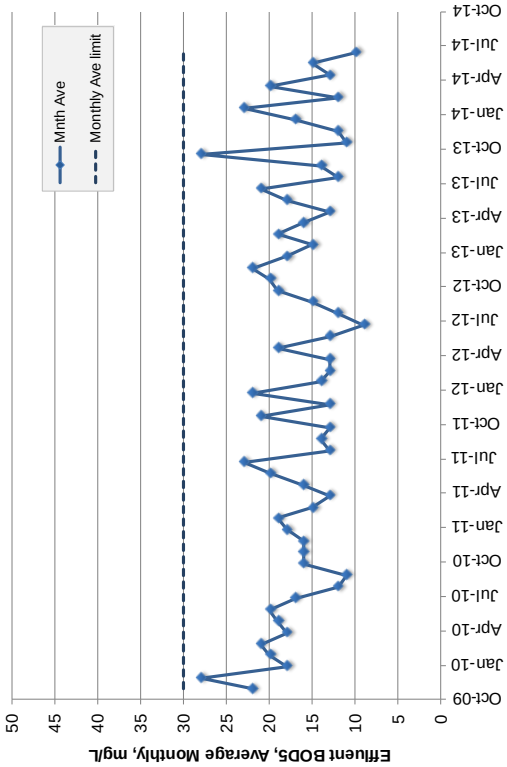
Effluent BOD5, Average Monthly, mg/L
Mnth Ave
Monthly Ave limit
0
5
10
15
20
25
30
35
40
45
50
Oct-09
Jan-10
Apr-10
Jul-10
Oct-10
Jan-11
Apr-11
Jul-11
Oct-11
Jan-12
Apr-12
Jul-12
Oct-12
Jan-13
Apr-13
Jul-13
Oct-13
Jan-14
Apr-14
Jul-14
Oct-14

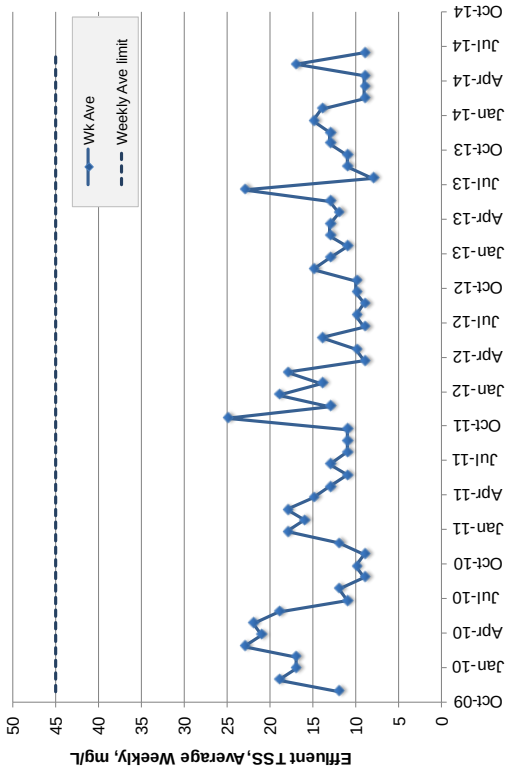
Effluent TSS, Average Weekly, mg/L
Wk Ave
Weekly Ave limit
0
5
10
15
20
25
30
35
40
45
50
Oct-09
Jan-10
Apr-10
Jul-10
Oct-10
Jan-11
Apr-11
Jul-11
Oct-11
Jan-12
Apr-12
Jul-12
Oct-12
Jan-13
Apr-13
Jul-13
Oct-13
Jan-14
Apr-14
Jul-14
Oct-14

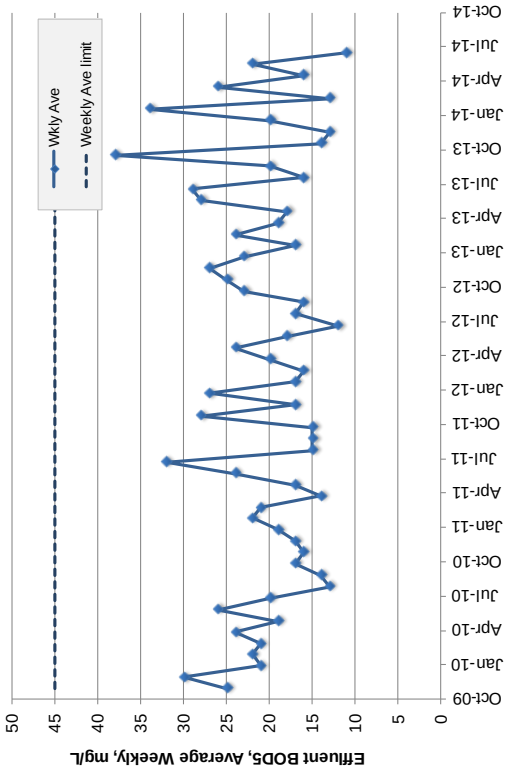
Effluent BOD5, Average Weekly, mg/L
Wkly Ave
Weekly Ave limit
0
5
10
15
20
25
30
35
40
45
50
Oct-09
Jan-10
Apr-10
Jul-10
Oct-10
Jan-11
Apr-11
Jul-11
Oct-11
Jan-12
Apr-12
Jul-12
Oct-12
Jan-13
Apr-13
Jul-13
Oct-13
Jan-14
Apr-14
Jul-14
Oct-14

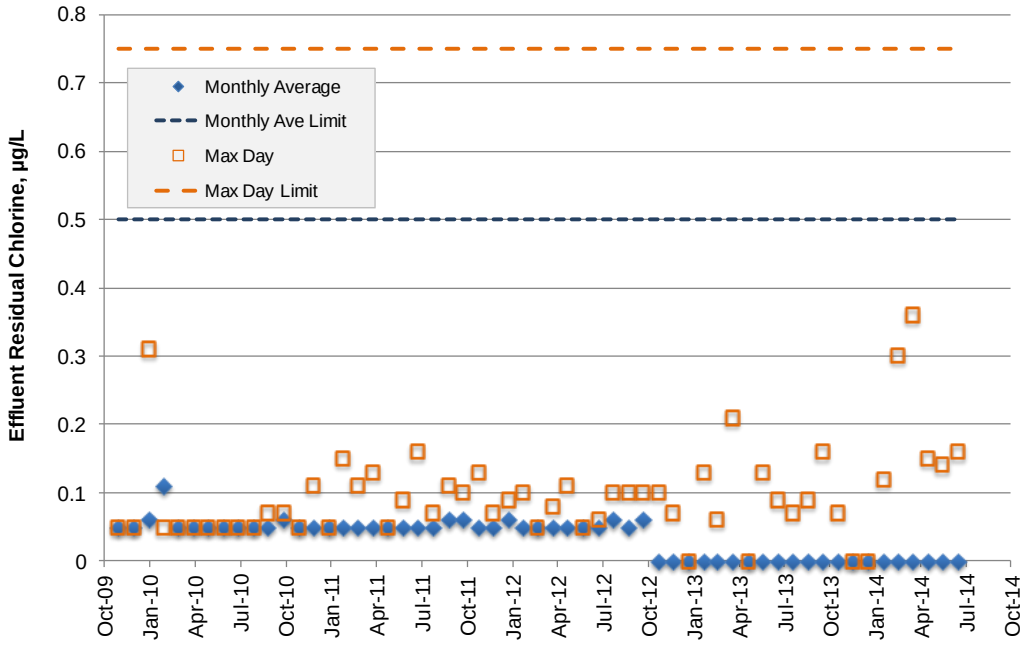
Effluent Residual Chlorine, µg/L
0.8
0.7
0.6
0.5
0.4
0.3
0.2
0.1
0
Monthly Average
Monthly Ave Limit
Max Day
Max Day Limit
Oct-09
Jan-10
Apr-10
Jul-10
Oct-10
Jan-11
Apr-11
Jul-11
Oct-11
Jan-12
Apr-12
Jul-12
Oct-12
Jan-13
Apr-13
Jul-13
Oct-13
Jan-14
Apr-14
Jul-14
Oct-14

King County South Plant Acute WET Test Results

Test Code	Date Collected	Organism	Endpoint	NOEC	LOEC	PMSD	% Survival
AQTX1261	2/7/1997	rainbow trout	96-hour Survival	0.68	100	20%	23%
AQTX1253	4/14/1997	fathead minnow	96-hour Survival	0.68	100	11%	78%
AQTX1522	8/19/1997	*Daphnia pulex*	48-hour Survival	100	> 100		100%
AQTX003007	9/23/1997	fathead minnow	96-hour Survival	100	> 100	13%	90%
AQTX1640	11/18/1997	*Daphnia pulex*	48-hour Survival	100	> 100		100%
AQTX1639	11/18/1997	fathead minnow	96-hour Survival	50	100	7%	88%
AQTX1884	2/26/1998	*Daphnia pulex*	48-hour Survival	100	> 100	9%	95%
AQTX1883	2/26/1998	fathead minnow	96-hour Survival	100	> 100	8%	95%
AQTX1888	5/19/1998	*Daphnia pulex*	48-hour Survival	100	> 100	8%	100%
AQTX1887	5/19/1998	fathead minnow	96-hour Survival	100	> 100	5%	100%
AQTX002998	8/4/1999	*Daphnia pulex*	48-hour Survival	100	> 100		100%
AQTX002997	8/4/1999	fathead minnow	96-hour Survival	100	> 100		100%
AQTX002994	7/19/2001	fathead minnow	96-hour Survival	100	> 100	12%	93%
AQTX002993	7/19/2001	*Daphnia pulex*	48-hour Survival	100	> 100		100%
AQTX002989	12/5/2001	*Daphnia pulex*	48-hour Survival	100	> 100		100%
AQTX002990	12/5/2001	fathead minnow	96-hour Survival	100	> 100	11%	100%
RMAR1177	2/8/2008	*Daphnia pulex*	48-hour Survival	100	> 100	14%	75%
RMAR1178	2/11/2008	fathead minnow	96-hour Survival	100	> 100	11%	88%
RMAR1210	4/2/2008	*Daphnia pulex*	48-hour Survival	100	> 100	5%	100%
RMAR1208	4/7/2008	fathead minnow	96-hour Survival	100	> 100	29%	78%
RMAR1298	7/9/2008	*Daphnia pulex*	48-hour Survival	100	> 100	9%	100%
RMAR1296	8/18/2008	fathead minnow	96-hour Survival	100	> 100	19%	85%
RMAR1327	10/8/2008	*Daphnia pulex*	48-hour Survival	100	> 100	5%	100%
RMAR1325	10/13/2008	fathead minnow	96-hour Survival	100	> 100	9%	93%
RMAR2684	8/21/2012	*Daphnia pulex*	48-hour Survival	100	> 100	11%	100%
RMAR2683	8/21/2012	fathead minnow	96-hour Survival	100	> 100	8%	98%
RMAR2829	2/6/2013	*Daphnia pulex*	48-hour Survival	100	> 100	5%	100%
RMAR2831	2/11/2013	fathead minnow	96-hour Survival	100	> 100	5%	95%

King County South Plant Chronic WET Test Results

Test Code	Collected	Organism	Endpoint	NOEC	LOEC	PMSD
AQTX1262	2/7/1997	*Ceriodaphnia dubia*	7-day Survival	0.68	> 0.68	
			Reproduction	0.68	> 0.68	23%
AQTX1252	4/11/1997	fathead minnow	7-day Survival	0.68	> 0.68	3%
			Biomass	0.68	> 0.68	14%
			Weight	0.68	> 0.68	14%
RMAR0141	9/12/1997	Atlantic mysid	7-day Survival	25	50	7%
			Biomass	12.5	25	10%
			Weight	12.5	25	11%
RMAR0142	9/12/1997	inland silverside	7-day Survival	50	100	3%
			Biomass	25	50	17%
			Weight	25	50	17%
AQTX1651	12/3/1997	Atlantic mysid	7-day Survival	50	100	12%
			Biomass	6.25	12.5	17%
			Weight	0.76	6.25	15%
AQTX1652	12/3/1997	inland silverside	7-day Survival	50	100	12%
			Biomass	25	50	11%
			Weight	25	50	10%
AQTX1886	3/4/1998	Atlantic mysid	7-day Survival	50	100	16%
			Biomass	25	50	20%
			Weight	100	> 100	31%
AQTX1885	3/4/1998	inland silverside	7-day Survival	50	100	15%
			Biomass	25	50	15%
			Weight	25	50	13%
AQTX1890	6/3/1998	Atlantic mysid	7-day Survival	25	50	20%
			Biomass	25	50	22%
			Weight	25	50	23%
AQTX1889	6/3/1998	inland silverside	7-day Survival	50	100	
			Biomass	50	100	25%
			Weight	50	> 50	22%
AQTX002996	8/11/1999	Atlantic mysid	7-day Survival	50	100	19%
			Biomass	25	50	28%
			Weight	100	> 100	80%
AQTX002995	8/11/1999	inland silverside	7-day Survival	25	50	10%
			Biomass	12.5	25	17%
			Weight	12.5	25	17%
AQTX002991	7/11/2001	Atlantic mysid	7-day Survival	50	100	23%
			Biomass	50	100	26%
			Biomass	50	100	26%
AQTX002992	7/11/2001	inland silverside	7-day Survival	12.5	25	11%
			Biomass	25	50	22%
			Weight	50	> 50	24%
AQTX002988	11/28/2001	Atlantic mysid	7-day Survival	50	100	17%
			Biomass	50	100	23%
			Weight	50	100	22%
AQTX002987	11/28/2001	inland silverside	7-day Survival	50	100	18%
			Biomass	50	100	18%
			Weight	50	100	17%
RMAR1180	2/6/2008	Atlantic mysid	7-day Survival	12.5	25	15%
			Biomass	0.43	12.5	15%
			Weight	0.43	12.5	15%
RMAR1179	2/6/2008	topsmelt	7-day Survival	12.5	25	13%
			Biomass	0.43	12.5	16%
			Weight	0.43	12.5	11%
RMAR1207	4/2/2008	Atlantic mysid	7-day Survival	50	100	12%
			Biomass	12.5	25	14%
			Weight	0.43	12.5	12%
RMAR1209	4/2/2008	topsmelt	7-day Survival	25	50	12%
			Biomass	12.5	25	15%
			Weight	12.5	25	13%
RMAR1299	7/9/2008	Atlantic mysid	7-day Survival	50	100	13%
			Biomass	12.5	25	13%
			Weight	12.5	25	12%
RMAR1297	7/9/2008	topsmelt	7-day Survival	50	100	15%
			Biomass	25	50	22%
			Weight	25	50	19%
RMAR1328	10/8/2008	Atlantic mysid	7-day Survival	50	100	16%
			Biomass	25	50	15%
			Weight	25	50	12%
RMAR1326	10/8/2008	topsmelt	7-day Survival	50	100	7%
			Biomass	50	100	20%
			Weight	50	> 50	19%
RMAR2771	10/31/2012	Atlantic mysid	7-day Survival	50	100	16%
			Biomass	25	50	17%
			Weight	25	50	16%
RMAR2770	10/31/2012	topsmelt	7-day Survival	50	100	16%
			Biomass	25	50	24%
			Weight	25	50	16%
RMAR2828	2/6/2013	Atlantic mysid	7-day Survival	50	100	13%
			Biomass	12.5	25	15%
			Weight	0.54	12.5	10%
RMAR2830	2/6/2013	topsmelt	7-day Survival	50	100	14%
			Biomass	25	50	18%
			Weight	25	50	15%

Appendix E — Technical Calculations

Several of the Excel® spreadsheet tools used to evaluate a discharger's ability to meet Washington State water quality standards can be found in the PermitCalc workbook on Ecology's webpage at: http://www.ecy.wa.gov/programs/wq/permits/guidance.html.

Simple Mixing:

Ecology uses simple mixing calculations to assess the impacts of certain conservative pollutants, such as the expected increase in fecal coliform bacteria at the edge of the chronic mixing zone boundary. Simple mixing uses a mass balance approach to proportionally distribute a pollutant load from a discharge into the authorized mixing zone. The approach assumes no decay or generation of the pollutant of concern within the mixing zone. The predicted concentration at the edge of a mixing zone (MC) is based on the following calculation:

$$MC = [EC + (AC \times DF)]/(1 + DF)$$

where:

EC = Effluent Concentration
AC = Ambient Concentration
DF = Dilution Factor

Reasonable Potential Analysis:

The process and formulas for determining reasonable potential and effluent limits are taken directly from the *Technical Support Document for Water Quality-based Toxics Control*, (EPA 505/2-90-001). The adjustment for autocorrelation is from EPA (1996a), and EPA (1996b).

Calculation of Water Quality-Based Effluent Limits:

Water quality-based effluent limits are calculated by the two-value wasteload allocation process as described on page 100 of the TSD (EPA, 1991) and shown below.

1. Calculate the acute wasteload allocation WLA_a by multiplying the acute criteria by the acute dilution factor and subtracting the background factor. Calculate the chronic wasteload allocation (WLA_c) by multiplying the chronic criteria by the chronic dilution factor and subtracting the background factor.

$$WLA_a = (\text{acute criteria} \times DF_a) - [(\text{background conc.} \times (DF_a - 1)]$$
$$WLA_c = (\text{chronic criteria} \times DF_c) - [(\text{background conc.} \times (DF_c - 1)]$$

where: DF_a = Acute Dilution Factor
DF_c = Chronic Dilution Factor

2. Calculate the long term averages (LTA_a and LTA_c) which will comply with the wasteload allocations WLA_a and WLA_c.

$$LTA_a = WLA_a \times e^{[0.5\sigma^2 - z\sigma]}$$

where: $\sigma^2 = \ln[CV^2 + 1]$
$z = 2.326$
CV = coefficient of variation = std. dev./mean

$$LTA_c = WLA_c \times e^{[0.5\sigma^2 - z\sigma]}$$

where: $\sigma^2 = \ln[(CV^2 \div 4) + 1]$
$z = 2.326$

3. Use the smallest LTA of the LTA_a or LTA_c to calculate the maximum daily effluent limit and the monthly average effluent limit.

Maximum Daily Limit = MDL

$MDL = LTA \times e^{[Z\sigma - 0.5\sigma^2]}$ where: $\sigma^2 = \ln[CV^2 + 1]$
z = 2.326 (99th percentile occurrence)
LTA = Limiting long term average

Average Monthly Limit = AML

$AML = LTA \times e^{[Z\sigma_n - 0.5\sigma_n^2]}$ where: $\sigma_n^2 = \ln[(CV^2 \div n) + 1]$
n = number of samples/month
z = 1.645 (95th percentile occurrence)
LTA = Limiting long term average

Mixing Model Output Files

Critical Case: South TP 17-December 2001 Acute 90% Currents

/ UM3. Case 2; ambient file P:\plumes\vplumes\South\South.012.db; Diffuser table record 1: ----------

Ambient Table:

Depth m	Amb-cur m/s	Amb-dir deg	Amb-sal psu	Amb-tem C	Amb-pol kg/kg	Decay s-1	Far-spd m/s	Far-dir deg	Disprsn m0.67/s2	Density sigma-T
0.0	0.39	0.0	29.57	10.0	0.0	0.0	0.02	0.0	0.0003	22.75
5.0	0.39	0.0	29.98	9.99	0.0	0.0	0.02	0.0	0.0003	23.07
15.0	0.39	0.0	30.0	10.0	0.0	0.0	0.02	0.0	0.0003	23.08
25.0	0.39	0.0	30.01	10.01	0.0	0.0	0.02	0.0	0.0003	23.09
35.0	0.39	0.0	30.02	10.02	0.0	0.0	0.02	0.0	0.0003	23.09
45.0	0.39	0.0	30.03	10.03	0.0	0.0	0.02	0.0	0.0003	23.1
55.0	0.14	0.0	30.05	10.05	0.0	0.0	0.02	0.0	0.0003	23.11
65.0	0.14	0.0	30.07	10.06	0.0	0.0	0.02	0.0	0.0003	23.13
75.0	0.14	0.0	30.11	10.1	0.0	0.0	0.02	0.0	0.0003	23.16
85.0	0.14	0.0	30.14	10.1	0.0	0.0	0.02	0.0	0.0003	23.18
95.0	0.14	0.0	30.2	10.11	0.0	0.0	0.02	0.0	0.0003	23.22
105.0	0.14	0.0	30.23	10.12	0.0	0.0	0.02	0.0	0.0003	23.24
115.0	0.14	0.0	30.23	10.13	0.0	0.0	0.02	0.0	0.0003	23.24
125.0	0.18	0.0	30.3	10.12	0.0	0.0	0.02	0.0	0.0003	23.29
135.0	0.18	0.0	30.33	10.1	0.0	0.0	0.02	0.0	0.0003	23.32
145.0	0.18	0.0	30.38	10.13	0.0	0.0	0.02	0.0	0.0003	23.36
155.0	0.18	0.0	30.38	10.13	0.0	0.0	0.02	0.0	0.0003	23.36
165.0	0.14	0.0	30.39	10.13	0.0	0.0	0.02	0.0	0.0003	23.36
175.0	0.14	0.0	30.39	10.13	0.0	0.0	0.02	0.0	0.0003	23.36
185.0	0.14	0.0	30.39	10.13	0.0	0.0	0.02	0.0	0.0003	23.36

Diffuser table:

P-dia (in)	P-elev (ft)	V-angle (deg)	H-angle (deg)	Ports ()	Spacing (ft)	SttTime (hr)	EndTime (hr)	Incrmnt (hr)	AcuteMZ (ft)	ChrncMZ (ft)	P-depth (ft)	Ttl-flo (MGD)	Eff-sal (psu)	Temp (C)	Polutnt (kg/kg)
4.0	5.0	60.0	0.0	168.0	3.0	3.0	27.0	3.0	82.0	823.0	623.0	117.0	0.0	12.0	100.0
P-dia (in)	P-elev (ft)	V-angle (deg)	H-angle (deg)	Ports ()	Spacing (ft)	SttTime (hr)	EndTime (hr)	Incrmnt (hr)	AcuteMZ (ft)	ChrncMZ (ft)	P-depth (ft)	Ttl-flo (MGD)	Eff-sal (psu)	Temp (C)	Polutnt (kg/kg)
4.0	5.0	60.0	0.0	168.0	3.0	3.0	27.0	3.0	82.0	823.0	623.0	117.0	0.0	12.0	100.0

Simulation:

Froude number: 24.43; effluent density (sigma-T) -0.43777851; effluent velocity 3.764(m/s);

Step	Depth (ft)	Amb-cur (cm/s)	P-dia (in)	Polutnt (kg/kg)	Dilutn ()	x-posn (ft)	y-posn (ft)	
0	623.0	14.0	4.0	100.0	1.0	0.0	0.0;	
100	619.2	14.0	26.0	13.8	7.099	2.606	0.0;	
119	617.7	14.0	36.01	9.475	10.33	3.794	0.0;	merging;
200	596.4	14.0	249.4	1.905	51.29	22.94	0.0;	
265	521.8	16.16	971.2	0.526	185.7	82.29	0.0;	acute zone;
300	443.1	18.0	2023.2	0.263	371.4	151.5	0.0;	
312	406.8	17.96	2730.3	0.208	470.7	190.8	0.0;	trap level;
323	383.8	14.98	3475.1	0.179	544.8	221.7	0.0;	begin overlap;
382	348.3	14.0	5032.6	0.155	628.8	337.1	0.0;	local maximum rise or fall;

Critical Case: South TP 21-Sept 1999 Chronic 50% Currents

```
     1 : case 3 (NRFIELD)
   3.1536        168    0.1016   60.0000  188.5000
   0.0690   90.0000    1.8300
       20     0.998945    0.0000   16.0000
   0.0000 1.0221621   29.5120   12.9160    0.1250    0.0000
   5.0000 1.0222872   29.5920   12.5800    0.1250    0.0000
  15.0000 1.0223851   29.6490   12.2900    0.1250    0.0000
  25.0000 1.0223939   29.6530   12.2600    0.1250    0.0000
  35.0000 1.0225008   29.7250   11.9800    0.1250    0.0000
  45.0000 1.0226498   29.8500   11.6900    0.1250    0.0000
  55.0000 1.0227789   29.9660   11.4700    0.0510    0.0000
  65.0000 1.0227952   29.9800   11.4400    0.0510    0.0000
  75.0000 1.0228463   30.0320   11.3800    0.0510    0.0000
  85.0000 1.0228694   30.0570   11.3600    0.0510    0.0000
  95.0000 1.0228750   30.0640   11.3600    0.0510    0.0000
 105.0000 1.0228966   30.0870   11.3400    0.0510    0.0000
 115.0000 1.0229409   30.1370   11.3100    0.0510    0.0000
 125.0000 1.0229897   30.1840   11.2400    0.0750    0.0000
 135.0000 1.0230134   30.2120   11.2300    0.0750    0.0000
 145.0000 1.0230953   30.2970   11.1400    0.0750    0.0000
 155.0000 1.0231742   30.3850   11.0800    0.0750    0.0000
 165.0000 1.0232422   30.4590   11.0200    0.0690    0.0000
 175.0000 1.0232739   30.4950   11.0000    0.0690    0.0000
 185.0000 1.0233255   30.5460   10.9310    0.0690    0.0000
```

```
 Results:

 Lengthscale ratios       s/lb     lm/lb
                          .078      .071
   .07  = Froude number, u3/b, F
  61.4  = Height to wastefield top, ze (m)
 127.1  = Wastefield submergence below surface (m)
  42.5  = Wastefield thickness, he = (m)
  40.1  = Height to level of cmax, zm (m)
  47.2  = Mixing region length, xi (m)
   187. = Minimum dilution, Sm
   215. = Flux-average dilution, Sfa =1.15 x Sm

FARFIELD CALCULATION Constant Diffusivity 0.0003 m^2/3/s
based on Wastefield width of 152.9 m

Distance (m)  Dilution
251     225
```

Critical Case: South TP 19-Sept 2000 Human Health 50% Currents

```
   2 : case 3 (NRFIELD)

   2.3214       168    0.1016   60.0000  188.5000
   0.0690   90.0000    1.8300
       20     0.998945    0.0000   16.0000
   0.0000 1.0222418   29.7070   13.2870    0.1250    0.0000
   5.0000 1.0225323   29.9990   12.9500    0.1250    0.0000
  15.0000 1.0226990   30.1190   12.5600    0.1250    0.0000
  25.0000 1.0227208   30.1300   12.4900    0.1250    0.0000
  35.0000 1.0227912   30.1870   12.3500    0.1250    0.0000
  45.0000 1.0228862   30.2500   12.1000    0.1250    0.0000
  55.0000 1.0229816   30.3330   11.9300    0.0510    0.0000
  65.0000 1.0230198   30.3680   11.8700    0.0510    0.0000
  75.0000 1.0230740   30.4190   11.7900    0.0510    0.0000
  85.0000 1.0231034   30.4450   11.7400    0.0510    0.0000
  95.0000 1.0231583   30.4970   11.6600    0.0510    0.0000
 105.0000 1.0231858   30.5230   11.6200    0.0510    0.0000
 115.0000 1.0231940   30.5310   11.6100    0.0510    0.0000
 125.0000 1.0232333   30.5630   11.5300    0.0750    0.0000
 135.0000 1.0232487   30.5780   11.5100    0.0750    0.0000
 145.0000 1.0232641   30.5930   11.4900    0.0750    0.0000
 155.0000 1.0232862   30.6190   11.4800    0.0750    0.0000
 165.0000 1.0232903   30.6240   11.4800    0.0690    0.0000
 175.0000 1.0233009   30.6350   11.4700    0.0690    0.0000
 185.0000 1.0233087   30.6430   11.4620    0.0690    0.0000
 Results:

 Lengthscale ratios       s/lb     lm/lb
                          .049      .030

   .09  = Froude number, u3/b, F

  96.8  = Height to wastefield top, ze (m)
  91.7  = Wastefield submergence below surface (m)
  67.0  = Wastefield thickness, he = (m)
  63.3  = Height to level of cmax, zm (m)
  74.5  = Mixing region length, xi (m)

   361. = Minimum dilution, Sm
   415. = Flux-average dilution, Sfa =1.15 x Sm

FARFIELD CALCULATION Constant Diffusivity 0.0003 m^2/3/s
based on Wastefield width of 152.9 m

Distance (m)  Dilution
251     428.
```

Calculation of BOD_5 Oxidation with Temperature Adjustment

INPUT		Notes
Effluent BOD_5 (mg/L)	45	Tech-based permitted max weekly value
Effluent Dissolved Oxygen (DO) (mg/L)	1	Conservative estimate, small impact on results
Receiving Water Temperature (deg C)	12.7	1 DADMax value from KC's ambient study
Receiving Water DO (mg/L)	5.8	KC's 2013 Receving Water Rpt -10th percentile
DO WQ Standards (mg/L)	7	
Chronic Mixing Dilution Factor	225	
Time for effluent to travel from outfall to chronic mixing boundary (days)	0.580	Small impact, so approximate-->Mixing document shows min current = 0.005 m/s, therefore to reach chronic boundary at 825' (251 m) would take approx 0.58 days.
Oxidation rate of BOD, base e at 20 deg C, k_1 (day^-1)*	0.23	*k_1 = 0.12-0.23 day^{-1} for effluent from biological treatment process (*Metcalf and Eddy Wastewater Engineering Treatment and Reuse. Fourth edition* , page 86. 2003.)
OUTPUT		
Effluent Ultimate BOD (mg/L)	65.9	
Oxidation rate of BOD at ambient temperature, base e (day^-1)	0.16	
BOD oxidized between outfall and chronic mixing zone (mg/L)	6.0	
RESULTS		
DO at chronic mixing zone	5.75	
Difference between ambient DO and DO at chronic mixing boundary	0.05	
There is no reasonable potential of not meeting the DO criteria under these conditions.		

Calculation of Fecal Coliform at Chronic Mixing Zone

INPUT		
Chronic Dilution Factor	225	
Receiving Water Fecal Coliform, #/100 ml	1	Maximum value from KC's 2013 ambient study
Effluent Fecal Coliform - worst case, #/100 ml	400	Maximum permitted limit
Surface Water Criteria, #/100 ml	*14*	
OUTPUT		
Fecal Coliform at Mixing Zone Boundary, #/100 ml	**3**	
Difference between mixed and ambient, #/100 ml	2	

Conclusion: At design flow, the discharge has no reasonable potential to violate water quality standards for fecal coliform.

Reasonable Potential Calculation

Facility	King County South Plant WWTP
Water Body Type	Marine

Dilution Factors:	Acute	Chronic
Aquatic Life	186	225
Human Health Carcinogenic		428
Human Health Non-Carcinogenic		428

Pollutant, CAS No. & NPDES Application Ref. No.			AMMONIA, Criteria as Total NH3	ANTIMONY (INORGANIC) 7440361M	ARSENIC (dissolved) 7440382 2M	BIS(2-ETHYLHEXYL) PHTHALATE 117817 13B	CADMIUM - 7440439 4M Hardness dependent	CHLOROFORM 67663 11V	CHROMIUM(HEX) 18540299	COPPER - 7440508 6M Hardness dependent	CYANIDE 57125 14M	1,4 DICHLOROBENZENE 106467 22B	2,4 DICHLOROPHENOL 120832 2A
Effluent Data	# of Samples (n)		60	29	29	22	29	23	29	29	28	23	22
	Coeff of Variation (Cv)		0.6	0.28	0.12	0.62	0.61	0.5	0.22	0.24	0.91	1.03	0.91
	Effluent Concentration, ug/L (Max. or 95th Percentile)		45,000		1.74		0.05		0.9	13.3	12.1		
	Calculated 50th percentile Effluent Conc. (when n>10)			0.42		1.37		0.5			2.5	0.5	0.28
Receiving Water Data	90th Percentile Conc., ug/L		0.085		1.45		0.073		0.15	0.354	0		
	Geo Mean, ug/L			0.172		0		0			0	0	0
Water Quality Criteria	Aquatic Life Criteria, ug/L	Acute	9,900	-	69	-	42	-	1100	4.8	0.91	-	-
		Chronic	1,487	-	36	-	9.3	-	50	3.1	2.8	-	-
	WQ Criteria for Protection of Human Health, ug/L		-	4300	-	5.9	-	470	-	-	220000	2600	790
	Metal Criteria Translator, decimal	Acute	-	-	1	-	0.994	-	0.993	0.83	-	-	-
		Chronic	-	-	-	-	0.994	-	0.993	0.83	-	-	-
	Carcinogen?		N	N	Y	Y	N	Y	N	N	N	N	N

Aquatic Life Reasonable Potential

Effluent percentile value		0.950	0.950	0.950	0.950	0.950	0.950		
s	$s^2=\ln(CV^2+1)$	0.555	0.120	0.562	0.217	0.237	0.777		
Pn	$Pn=(1\text{-confidence level})^{1/n}$	0.951	0.902	0.902	0.902	0.902	0.899		
Multiplier		1.00	1.00	1.00	1.00	1.00	1.00		
Max concentration (ug/L) at edge of…	Acute	242	1.452	0.073	0.154	0.411	0.065		
	Chronic	200	1.451	0.073	0.153	0.401	0.054		
Reasonable Potential? Limit Required?		**NO**	**NO**	**NO**	**NO**	**NO**	**NO**		

Human Health Reasonable Potential

s	$s^2=\ln(CV^2+1)$	0.2747	0.5703	0.4724	0.7767	0.8504	0.7767	
Pn	Pn=(1-confidence level)1/n	0.902	0.873	0.878	0.899	0.878	0.873	
Multiplier		0.7012	0.5222	0.5769	0.372	0.3715	0.4128	
Dilution Factor		428	428	428	428	428	428	
Max Conc. at edge of Chronic Zone, ug/L		0.1726	0.0032	1.2E-03	0.0058	0.0012	0.0007	
Reasonable Potential? Limit Required?		**NO**	**NO**	**NO**	**NO**	**NO**	**NO**	

Comments/Notes:

References: WAC 173-201A,
Technical Support Document for Water Quality-based Toxics Control, US EPA, March 1991, EPA/505/2-90-001, pages 56/99

Reasonable Potential Calculation - Page 2

Facility	King County South Plant WWTP
Water Body Type	Marine

Dilution Factors:	Acute	Chronic
Aquatic Life	186	225
Human Health Carcinogenic		428
Human Health Non-Carcinogenic		428

Pollutant, CAS No. & NPDES Application Ref. No.			DIETHYLPHTHALATE 84662 24E	LEAD - 7439921 7M Dependent on hardness	MERCURY 7439976 8M	NICKEL - 7440020 9M - Dependent on hardness	NONYLPHENOL	SILVER - 7740224 11M dependent on hardness.	TETRACHLOROETHYLENE 127184 24V	TRICHLOROPHENOL 2,4,6 88062 11A	ZINC- 7440666 13M hardness dependent	CHLORINE (Total Residual) 7782505	Polychlorinated Biphenyls (PCB's)*
Effluent Data	# of Samples (n)		22	29	29	29	2	29	23	22	29	1800	11
	Coeff of Variation (Cv)		0.52	0.66	0.21	0.17	0.6	0.51	0.43	0.33	0.18	0.64	0.561
	Effluent Concentration, ug/L (Max. or 95th Percentile)		0.5	0.9	0.0065	3.15	3.26	0.13			43.7	750	0.12
	Calculated 50th percentile Effluent Conc. (when n>10)		0.24		0.0051	2.32			0.5	0.95			0.06
Receiving Water Data	90th Percentile Conc., ug/L			0.006	0.0002	0.427	0	0.026			0.605	0	0
	Geo Mean, ug/L		0		0.0002	0.427			0	0			0
Water Quality Criteria	Aquatic Life Criteria, ug/L	Acute	-	210	1.8	74	7	1.9	-	-	90	13	10
		Chronic	-	8.1	0.025	8.2	1.7	-	-	-	81	7.5	0.03
	WQ Criteria for Protection of Human Health, ug/L		120000	-	0.15	4600	-	-	8.85	6.5	-	-	0.0002
	Metal Criteria Translator, decimal	Acute	-	0.951	0.85	0.99	-	0.85	-	-	0.946	-	-
		Chronic	-	0.951	-	0.99	-	-	-	-	0.946	-	-
	Carcinogen?		N	N	N	N	N	N	Y	Y	N	N	Y

Aquatic Life Reasonable Potential

Effluent percentile value				0.950	0.950	0.950	0.950	0.950			0.950	0.950	0.950
s	$s^2=\ln(CV^2+1)$			0.601	0.208	0.169	0.555	0.481			0.179	0.586	0.523
Pn	$Pn=(1\text{-confidence level})^{1/n}$			0.902	0.902	0.902	0.224	0.902			0.902	0.998	0.762
Multiplier				1.00	1.00	1.00	3.79	1.00			1.00	1.00	1.63
Max concentration (ug/L) at edge of…		Acute		0.011	0.000	0.441	0.067	0.026			0.824	4.032	0.001
		Chronic		0.010	0.000	0.439	0.055	0.026			0.786	3.333	0.001
Reasonable Potential? Limit Required?				**NO**	**NO**	**NO**	**NO**	**NO**			**NO**	**NO**	**NO**

Human Health Reasonable Potential

s	$s^2=\ln(CV^2+1)$	0.4892	0.2077	0.1688	0.4119	0.3215	0.5231
Pn	Pn=(1-confidence level)1/n	0.873	0.902	0.902	0.878	0.873	0.762
Multiplier		0.5727	0.7646	0.804	0.619	0.6933	0.6893
Dilution Factor		428	428	428	428	428	428
Max Conc. at edge of Chronic Zone, ug/L		0.0006	0.0002	0.4314	1.2E-03	0.0022	0.0001
Reasonable Potential? Limit Required?		**NO**	**NO**	**NO**	**NO**	**NO**	**NO**

Comments/Notes: * PCBS were analyzed and reported as total arochlors using methods 608 and 8082A; all samples were below detection (0.059-0.24 ug/L depending on the sample). Values presented represent 1/2 MDL.

References: WAC 173-201A,
Technical Support Document for Water Quality-based Toxics Control, US EPA, March 1991, EPA/505/2-90-001, pages 56/99

Marine Un-ionized Ammonia Criteria Calculation

Calculation of seawater fraction of un-ionized ammonia from Hampson (1977). Un-ionized ammonia criteria for salt water are from EPA 440/5-88-004. Revised 19-Oct-

INPUT	
1. Receiving Water Temperature, deg C (90th percentile):	12.7
2. Receiving Water pH, (90th percentile):	8.0
3. Receiving Water Salinity, g/kg (10th percentile):	27.7
4. Pressure, atm (EPA criteria assumes 1 atm):	1.0
5. Unionized ammonia criteria (mg un-ionized NH_3 per liter) from EPA 440/5-88-004:	
Acute:	0.233
Chronic:	0.035
OUTPUT	
Using mixed temp and pH at mixing zone boundaries?	No
1. Molal Ionic Strength (not valid if >0.85):	0.568
2. pKa8 at 25 deg C (Whitfield model "B"):	9.311
3. Percent of Total Ammonia Present as Unionized:	1.9%
4. Total Ammonia Criteria (mg/L as NH_3):	
Acute:	12.04
Chronic:	1.81
RESULTS	
Total Ammonia Criteria (mg/L as N)	
Acute:	**9.90**
Chronic:	**1.49**

Aquatic Life and Human Health Limits Calculations - Outfall 001

Facility	King County South Plant WWTP
Water Body Type	Marine

Dilution Factors:	Acute	Chronic
Aquatic Life	186	225
Human Health Carcinogenic		428
Human Health Non-Carcinogenic		428

Pollutant, CAS No. & NPDES Application Ref. No.			CHLORINE (Total Residual) 7782505		Technology-based Limits				
Effluent Data	Coeff of Variation (Cv)		0.6						
Receiving Water Data	90th Percentile Conc., ug/L		0						
	Geo Mean, ug/L								
Water Quality Criteria	Aquatic Life Criteria, ug/L	Acute	13						
		Chronic	7.5						
	WQ Criteria for Protection of Metal Criteria Translator, decimal		-						
		Acute	-						
		Chronic	-						
	Carcinogen?		N						

Aquatic Life Limit Calculation

# of Compliance Samples Expected per month		30						
LTA Coeff. Var. (CV), decimal		0.6						
Permit Limit Coeff. Var. (CV), decimal		0.6						
Waste Load Allocations, ug/L	Acute	2418						
	Chronic	1688						
Long Term Averages, ug/L	Acute	776						
	Chronic	890						
Limiting LTA, ug/L		776						
Metal Translator or 1?		1.00						
Average Monthly Limit (AML), ug/L		**924**		**500**				
Maximum Daily Limit (MDL), ug/L		**2418**		**750**				

References: WAC 173-201A,
Technical Support Document for Water Quality-based Toxics Control, US EPA, March 1991, EPA/505/2-90-001, pages 56/99

Marine Temperature Reasonable Potential and Limit Calculation

Based on WAC 173-201A-200(1)(c)(i)--(ii) and Water Quality Program Guidance. All Data inputs must meet WQ guidelines. The Water Quality temperature guidance document may be found at: http://www.ecy.wa.gov/biblio/0610100.html

INPUT	
1. Chronic Dilution Factor at Mixing Zone Boundary	225
2. Annual max 1DADMax Ambient Temperature (Background 90th percentile)	12.7 °C
3. 1DADMax Effluent Temperature (95th percentile)	22.3 °C
4. Aquatic Life Temperature WQ Criterion	13.0 °C
OUTPUT	
5. Temperature at Chronic Mixing Zone Boundary:	12.74 °C
6. Incremental Temperature Increase or decrease:	0.04 °C
7. Incremental Temperature Increase 12/(T-2) if T≤ crit:	1.12 °C
8. Maximum Allowable Temperature at Mixing Zone Boundary:	13.00 °C
A. If ambient temp is warmer than WQ criterion	
9. Does temp fall within this warmer temp range?	NO
10. Temp increase allowed at mixing zone boundary, if required:	---
B. If ambient temp is cooler than WQ criterion but within 12/(T_{amb}-2) and within 0.3 °C of th	
11. Does temp fall within this incremental temp. range?	NO
12. Temp increase allowed at mixing zone boundary, if required:	---
C. If ambient temp is cooler than (WQ criterion-0.3) but within 12/(T_{amb}-2) of the criterion	
13. Does temp fall within this Incremental temp. range?	YES
14. Temp increase allowed at mixing zone boundary, if required:	NO LIMIT
D. If ambient temp is cooler than (WQ criterion - 12/(T_{amb}-2))	
15. Does temp fall within this Incremental temp. range?	NO
16. Temp increase allowed at mixing zone boundary, if required:	---
RESULTS	
17. Do any of the above cells show a temp increase?	**NO**
18. Temperature Limit if Required?	**NO LIMIT**

Green River Outfall Calculations

Spread of a Plume from a Point Source in a River with Boundary Effects from the Shoreline

Based on the method of Fischer et al. (1979) with correction for the effective origin of effluent.

Approach: perform a very quick analysis to assess plume as if discharged from a single port (the Green River outfall has 8 ports). Assess dilution at acute mixing zone boundary (31' downstream). Note that this is a very rough estimate calculation, performed quickly due to limited resources.

INPUT		Notes
1. Effluent Discharge Rate (MGD)	20.2	
or, Effluent Discharge Rate (cfs)	31.3	*Assumes dilution of 5 using 25% of river flow & single port (conservative, diffuser has 8 ports).*
2. Receiving Water Characteristics Downstream from Discharge:		
River Depth (ft)	7.00	
River Flow (cfs) (7Q10 chronic & acute, 30Q5 for non-carc, harm. mean for carc)	500	
% of stream flow allowed for Dilution Factor (e.g., 25% for chronic & 2.5% for acute)	25	
Stream Velocity (fps)	0.71	
Channel Width (ft)	100	
Stream Slope (ft/ft) or Manning roughness "n"	0.00097	
0 if slope or 1 if Manning "n" in previous cell	0	
3. Discharge Distance from Nearest Shoreline (ft)	44	
4. Location of Point of Interest to Estimate Dilution:		
Distance Downstream to Point of Interest (ft)	31	
Distance From Nearest Shoreline (ft)	44	
5. Transverse Mixing Coefficient Constant (usually 0.6):	0.6	
6. Original Fischer Method (enter 0) or Effective Origin Modification (enter 1)	0	
7. Is the Plume bounded by the shoreline?	Yes	
OUTPUT		
1. Source Conservative Mass Input Rate:		
Concentration of Conservative Substance (%)	100.00	
Source Conservative Mass Input Rate (cfs*%)	3,125.00	
2. Shear Velocity based on slope (ft/sec)	0.468	
Shear Velocity based on Manning "n" (using Prasuhn equations 8-26 and 8-54 assuming hydraulic		
Darcy-Weisbach friction factor "f"	#N/A	
Shear Velocity from Darcy-Weisbach "f" (ft/sec)	#N/A	
Selected Shear Velocity for next step (ft/sec)	0.468	
3. Transverse Mixing Coefficient (ft2/sec)	1.964	
4. Plume Characteristics Accounting for Shoreline Effect (Fischer et al., 1979):		
Co	6.25E+00	
x'	8.52E-03	
y'o	4.40E-01	
y' at point of interest	4.40E-01	
Solution using superposition equation (Fischer eqn 5.9):		
Term for n= -2	1.52E-204	
Term for n= -1	1.11E-51	
Term for n= 0	1.00E+00	
Term for n= 1	1.05E-16	
Term for n= 2	9.93E-125	
Upstream Distance from Outfall to Effective Origin of Effluent Source (ft)	#N/A	
Effective Distance Downstream from Effluent to Point of Interest (ft)	31.0	
x' Adjusted for Effective Origin	8.52E-03	
C/Co (dimensionless)	3.06E+00	
Concentration at Point of Interest (Fischer Eqn 5.9)	1.91E+01	
Unbounded Plume half-width (ft)	26.1	
Distance from near shore to discharge point (ft)	44.0	
Distance from far shore to discharge point (ft)	56.0	
RESULTS		
W, Plume width bounded by shoreline (ft)	**52**	
W, Unbounded Plume Width at Point of Interest (ft)	**52**	
Approximate Downstream Distance to Complete Mix (ft)	**456**	
Theoretical Dilution Factor at Complete Mix	**16**	
Calculated Flux-Average Dilution Factor Across Entire Plume Width	**8**	
Calculated Dilution Factor at Point of Interest	**5.2**	*Conservative result since assessed as a single port discharge, diffuser actually has 8 ports. Plumes from ports likely overlap, but dilution would be higher than calculated here.*

Calculation of Fecal Coliform at Chronic Mixing Zone

INPUT - Green River Outfall		
Acute Dilution Factor	5.0	
Receiving Water Fecal Coliform, #/100 ml	31	Geomean- EIM data (2004-2011)
Effluent Fecal Coliform - worst case, #/100 ml	200	Maximum permitted limit
Surface Water Criteria, #/100 ml	*100*	
OUTPUT		
Fecal Coliform at Mixing Zone Boundary, #/100 ml	**65**	

Conclusion: At design flow, the discharge has no reasonable potential to violate water quality standards for fecal coliform.

Aquatic Life Limit Calculations

Facility	Green River Emergency Outfall
Water Body Type	Freshwater

Pollutant, CAS No. & NPDES Application Ref. No.			**CHLORINE (Total Residual) 7782505**
Acute Dilution Factor			5.0
Effluent Data	Coeff of Variation (Cv)		0.6
Receiving Water Data	90th Percentile Conc., ug/L		0
Water Quality Criteria	Aquatic Life Criteria, ug/L	Acute	19
	Metal Criteria Translator, decimal	Acute	-
	Carcinogen?		N

Aquatic Life Limit Calculation

# of Compliance Samples Expected per month		4
LTA Coeff. Var. (CV), decimal		0.6
Permit Limit Coeff. Var. (CV), decimal		0.6
Waste Load Allocations, ug/L	Acute	95
Long Term Averages, ug/L	Acute	30.5
Limiting LTA, ug/L		30.5
Metal Translator or 1?		1.00
Maximum Daily Limit (MDL), ug/L		**95**

References: WAC 173-201A,
Technical Support Document for Water Quality-based Toxics Control, US EPA, March 1991, EPA/505/2-90-001, pages 56/99

Reasonable Potential Calculation - Green River Outfall, page 1 of 2

Facility	Green River Emergency Outfall
Water Body Type	Freshwater

Dilution Factor:	Acute
Aquatic Life	5.0

Pollutant, CAS No. & NPDES Application Ref. No.			AMMONIA, Criteria as Total NH3	ANTIMONY (INORGANIC) 7440360 1M	ARSENIC (dissolved) 7440382 2M	BIS(2-ETHYLHEXYL) PHTHALATE 117817 13B	CADMIUM - 7440439 4M Hardness dependent	CHLOROFORM 67663 11V	CHROMIUM(HEX) 18540299	COPPER - 744058 6M Hardness dependent	CYANIDE 57125 14M	1,4 DICHLOROBENZENE 106467 22B	2,4 DICHLOROPHENOL 120832 2A
Effluent Data	# of Samples (n)		257	29	29	22	29	23	29	29	28	23	22
	Coeff of Variation (Cv)		0.6	0.28	0.12	0.62	0.61	0.5	0.22	0.24	0.91	1.03	0.91
	Effluent Concentration, ug/L (Max. or 95th Percentile)		45,000		1.74		0.05		0.9	13.3	12.1		
	Calculated 50th percentile Effluent Conc. (when n>10)			0.42		1.37		0.5			2.5	0.5	0.28
Receiving Water Data	90th Percentile Conc., ug/L		70		1.45		0.073		0.15	0.354	0		
	Geo Mean, ug/L			0.172		0		0			0	0	0
Water Quality Criteria	Aquatic Life Criteria, ug/L	Acute	9,644	-	360	-	1.131	-	15	6.072	22	-	-
	Metal Criteria Translator,	Acute	-	-	1	-	0.943	-	0.982	0.996	-	-	-
	Carcinogen?		N	N	Y	Y	N	Y	N	N	N	N	N

Aquatic Life Reasonable Potential

Effluent percentile value		0.950	0.950	0.950	0.950	0.950	0.950	
s	$s^2=\ln(CV^2+1)$	0.555	0.120	0.562	0.217	0.237	0.777	
Pn	$Pn=(1\text{-confidence level})^{1/n}$	0.988	0.902	0.902	0.902	0.902	0.899	
Multiplier		1.00	1.00	1.00	1.00	1.00	1.00	
Max concentration (ug/L) at edge of…	Acute	9,056	1.508	0.068	0.297	2.933	2.420	
Reasonable Potential? Limit Required?		**NO**	**NO**	**NO**	**NO**	**NO**	**NO**	

Comments/Notes:

References: WAC 173-201A,
Technical Support Document for Water Quality-based Toxics Control, US EPA, March 1991, EPA/505/2-90-001, pages 56/99

Reasonable Potential Calculation - Green River Outfall, page 2 of 2

Facility	Green River Emergency Outfall
Water Body Type	Freshwater

Dilution Factor:	Acute
Aquatic Life	5.0

Pollutant, CAS No. & NPDES Application Ref. No.			DIETHYLPHTHALATE 84662 24B	LEAD - 7439921 7M Dependent on hardness	MERCURY 7439976 8M	NICKEL - 7440020 9M - Dependent on hardness	NONYLPHENOL	SILVER - 7740224 11M dependent on hardness.	TETRACHLOROETHYLENE 127184 24V	TRICHLOROPHENOL 2,4,6 88062 11A	ZINC- 7440666 13M hardness dependent	Polychlorinated Biphenyls (PCB's)*	CHLORINE (Total Residual) 7782505
Effluent Data	# of Samples (n)		22	29	29	29	2	29	23	22	29	11	1800
	Coeff of Variation (Cv)		0.52	0.66	0.21	0.17	0.6	0.51	0.43	0.33	0.18	0.561	0.64
	Effluent Concentration, ug/L (Max. or 95th Percentile)		0.5	0.9	0.007	3.15	3.26	0.13			43.7	0.12	100
	Calculated 50th percentile Effluent Conc. (when n>10)		0.24		0.005	2.32			0.5	0.95		0.06	
Receiving Water Data	90th Percentile Conc., ug/L			0.006	2E-04	0.427	0	0.026			0.605	0	0
	Geo Mean, ug/L		0		2E-04	0.427			0	0		0	
Water Quality Criteria	Aquatic Life Criteria, ug/L	Acute	-	19.28	2.1	561.1	28	0.526	-	-	45.31	2	19
	Metal Criteria Translator,	Acute	-	0.466	0.85	0.998	-	0.85	-	-	0.996	-	-
	Carcinogen?		N	N	N	N	N	N	Y	Y	N	Y	N

Aquatic Life Reasonable Potential

Effluent percentile value			0.950	0.950	0.950	0.950	0.950			0.950	0.950	0.950
s	$s^2=\ln(CV^2+1)$		0.601	0.208	0.169	0.555	0.481			0.179	0.523	0.586
Pn	$Pn=(1\text{-confidence level})^{1/n}$		0.902	0.902	0.902	0.224	0.902			0.902	0.762	0.998
Multiplier			1.00	1.00	1.00	3.79	1.00			1.00	1.63	1.00
Max concentration (ug/L) at edge of…		Acute	0.089	0.001	0.970	2.474	0.043			9.189	0.039	20
Reasonable Potential? Limit Required?			**NO**	**NO**	**NO**	**NO**	**NO**			**NO**	**NO**	**YES**

Comments/Notes: * PCBS were analyzed and reported as total arochlors using methods 608 and 8082A; all samples were below detection (0.059-0.24 ug/L depending on the sample). Values presented represent 1/2 MDL.

References: WAC 173-201A,
Technical Support Document for Water Quality-based Toxics Control, US EPA, March 1991, EPA/505/2-90-001, pages 56/99

Freshhwater Ammonia Criteria Calculation

Green River Outfall - Maintenance Only

Based on Chapter 173-201A WAC, amended November 20, 2006

INPUT		Notes
1. Receiving Water Temperature (deg C):	16.7 °C	EIM User Location ID = KCM-3106
2. Receiving Water pH:	7.7	EIM User Location ID = KCM-3106 (min=6.3, max=7.7)
3. Is salmonid habitat an existing or designated use?	Yes	
4. Are non-salmonid early life stages present or absent?	Present	
OUTPUT		
Using mixed temp and pH at mixing zone boundaries?	no	
Ratio	13.489	
FT	1.400	
FPH	1.201	
pKa	9.509	
Unionized Fraction	0.015	
Unionized ammonia NH3 criteria (mg/L as NH_3)		
Acute:	0.179	
Chronic:	0.035	
RESULTS		
Total ammonia nitrogen criteria (mg/L as N):		
Acute:	9.644	
Chronic:	1.896	

South Plant WWTP - Fecal Coliform Sample Frequency Calculations

KC has requested for a reduction in fecal monitoring from 7/week to 4 /week, or 16/month. Based on past performance, O&M records, and on the fact that they operate at approx 20-40% of the their permit levels (depending on how calculated), a sample freq of 19/month (or 5 times/wk) is granted for fecal coliform.

	ln(fecal)
Mean	3.7
Standard Error	0.0
Median	3.7
Standard Deviation	1.0
Sample Variance	1.0
Minimum	0.1
Maximum	9.0
Sum	3833
Count	1029
Confidence Level (95.000%)	0.1
Coeff of Var	0.27
d (10% of mean)	0.37
d (20% of mean)	0.75
dr, relative error	0.10
dr, relative error	0.20
Z (95% confidence level)	1.645
Z (90% confidence level)	1.282
95% confid level, 10% rel error	
A.) n - samples per month	**19**
C.) n	19
D.) n	59

Appendix F — Significant Industrial Users

Company Name	Permit Number	Local Limits	Categorical Limits	If categorical, which category and sub-category
A.O. Smith Water Products Company	7718-05	Yes	Yes	METAL FINISHING- CFR 433
Accurate Industries	7864-01	Yes	Yes	METAL FINISHING- CFR 433
Aero Controls, Inc. - Pike Street	7708-03	Yes	Yes	METAL FINISHING- CFR 433
Aramark Uniform & Career Apparel LLC	7836-01	Yes	No	NA
B.S.B. Diversified Co. Inc.	7575-04	Yes	No	NA
Baker Commodities Inc.	7556-03	Yes	No	NA
Black Oxide, LLC	7702-04	Yes	Yes	METAL FINISHING- CFR 433
Boeing Commercial Airplane- Auburn	7599-06	Yes	Yes	METAL FINISHING- CFR 433
Boeing Commercial Airplane - Renton	7630-04	Yes	Yes	METAL FINISHING- CFR 433
Boeing Electronics Center	7508-04	Yes	Yes	METAL FINISHING- CFR 433
Burlington Environmental LLC - Kent	7159-08	Yes	Yes	Centralized Waste 437B PSES
Cedar Grove Composting, Inc.	7652-04	Yes	No	NA
Coca-Cola Bottling Co of Washington	7022-05	Yes	No	NA
Darigold, Inc. - Issaquah Plant	7075-05	Yes	No	NA
Davis Wire Corporation	7243-04	Yes	No	NA
Electrofinishing Inc.	7578-03	Yes	Yes	METAL FINISHING- CFR 433
Exotic Metals Forming Company	7672-05	Yes	Yes	METAL FINISHING- CFR 433
G & K Services	7857-01	Yes	No	NA
Hexcel Corporation	7808-02	Yes	No	NA
Honeywell International Inc.	7206-05	Yes	Yes	ELECT. COMPS - CFR 469
Hytek Finishes Company	7569-03	Yes	Yes	METAL FINISHING- CFR 433
Kenworth Truck Company	7627-04	Yes	Yes	METAL FINISHING- CFR 433
KC RSD - Renton Decant Facility	7756-04	Yes	No	NA
KC SWD - Bow Lake Transfer Station	7882-01	Yes	No	NA
King County SWD - Cedar Hills Landfill	7842-01	Yes	No	NA
KC SWD - Factoria Transfer Station	7586-04	Yes	No	NA
KC SWD - Houghton Transfer Station	7879-01	Yes	No	NA
KC SWD - Renton Transfer Station	7880-01	Yes	No	NA
King's Command Foods Inc.	7742-03	Yes	No	NA
Mikron Industries	7749-04	Yes	Yes	PLASTIC PROD MANF.-463
Oberto Brands	7706-05	Yes	No	NA
Pacific Propeller International LLC	7235-04	Yes	Yes	ELECTROPLATING- CFR 413
Port of Seattle, SeaTac Inter. Airport, BW	7772-02	Yes	No	NA
Port of Seattle, SeaTac Inter. Airport, IWS	7810-02	Yes	No	NA
Protective Coatings Inc.	7242-04	Yes	Yes	ELECTROPLATING- CFR 413
Qualawash Holdings LLC	7153-04	Yes	No	NA
Ralcorp Frozen Bakery Products	7671-04	Yes	No	NA
Red Dot Corporation	7866-02	Yes	Yes	METAL FINISHING- CFR 433
Rexam Beverage Can Company	7085-07	Yes	Yes	COIL COATING- CFR 465
Safeway Inc.- Beverage Plant	7042-04	Yes	No	NA
Safeway Inc.- Milk and Ice Cream Plant	7832-02	Yes	No	NA
Seattle, City of- SPU - Kent Highlands	7115-03	Yes	No	NA
Shasta Beverages	7881-01	Yes	No	NA
Silicon Designs Inc.	7887-01	Yes	Yes	ELECT. COMPS - CFR 469
Skills Inc. -Auburn Facility	7719-05	Yes	Yes	METAL FINISHING- CFR 433
Smith Fabrication Inc.	7801-02	Yes	Yes	METAL FINISHING- CFR 433
Stoller Metals, Inc.	7823-03	Yes	Yes	METAL FINISHING- CFR 433
Tim's Cascade Snacks	7865-01	Yes	No	NA
Triple B Corporation	7855-01	Yes	No	NA
Tri-Way Industries Inc.	7746-04	Yes	Yes	METAL FINISHING- CFR 433
Vectra Fitness Inc.	7760-03	Yes	Yes	METAL FINISHING- CFR 433
Western Pneumatic Tube Co.	7604-04	Yes	Yes	METAL FINISHING- CFR 433
WSDOT- SR 520 Bridge Replacement and HOV Program Construction Site	7868-02	Yes	No	NA

Appendix G — Response to Comments

King County Entity Review Comments
Significant comments are listed below; comments that provided clarification and/or corrections are not listed.

Comment Number	Page	Section/ permit or factsheet	Comments	Suggested Resolution/Change	Commentor	Ecology Response
1	4	permit - Summary of Submittals	S3.A submission lists Permit Application as annual. Typo? Also PP data is sent annually but does it have to be in March 31 each year?	remove application reference and revise date to XXX	Betsy Cooper	WebDMR annual submittals require a due date. Changed to July 31, consistent with West Point and with annual CSO report submittal.
5	6	S1A - green river	the mixing zone calculation appear to have changes because 500cfs was used in the calculation. We have concern that this overly restricts the MZ.	We would like to discuss this with you. Perhaps their should be a reconsideration of the assumptions to reflect the differences in flow rates seasonal.	Betsy Cooper	Due to unnecessary restrictions as pointed out by KC, Ecology changed the effluent flow limit for the Green River discharge to a calculated value based on a dilution factor of 5 which is required to assure wq criteria are met. The County must calculate the maximum flow allowed based on the existing river flow and not exceed that flow.
13	17	S4.E I&I	This section is calling for a new I&I analysis	KC undertook, several years ago, an extensive monitoring program and analysis of I&I in the service area and engaged the component agencies in process of considering i&I control. We are continuing to consider I&& actions and are engaged in the discussion of I&I with our component agencies. We would like to discuss the proposed evaluation with you to understand the intent of the effort and understand future that Ecology feels needs to be understood more fully.		Full I/I evaluation not required, looking to quantify inflow and infiltration (in gallons per day per capita) in separated basins using EPA procedure described in Publication No. 97-03 at: http://www.ecy.wa.gov/programs/wq/permits/guidance.html. KC discussion: KC historically reported I/I in gallons per acre per day for KC owned and maintained systems only: most of system is not KC owned and maintained. KC interceptor hard to assess, major flows from outside agencies. Overall general characterization in system done a few years ago. In the early 2000s KC evaluated I/I, 400 flow monitors in separated systems, worked hard to assess I/I, came back in 2010/2011, deployed 50 meters a second time. Not just in KC pipe, throughout service area. Steve forwarded KC's I/I online library with historical information. Component agencies: some more aggressively reducing I/I, others not so much (pumping energy a big factor), KC's contract with local agencies makes enforecement difficult. City of Renton 50-90 connections. KC's approach is more incentive-based encouraging a cooperative relationship. Conclusion: replaced I/I study with an I/I summary as part of the Wasteload Assessment Report.
14	19	S5.E prevent connection of	requirement is broader than KC jurisdiction	Please add "with in KC control" at the end of the sentence.	Betsy Cooper	Text added.
15	21	S5.g.b. O&M manual components	intro paragraph requires that the O&M manuals "must be consistent with the guidance in Table G1-3 in the Criteria for sewage works Design (Orange Book), 2008"	This statement of requirement with the Orange Book Table was not in the WP permit. Since the components of the manual are listed we request that this statement be removed so that the WP and SP permit are the same. Also since the Orange Book is guidance so it should not be "required" in a permit.	Betsy Cooper	Commented noted and text revised.
16	22	S.6.A.1.b Pretreatment - general	S6.A1.b contains a sentence at the end of the paragraph that West point doesn't have" Once issued, an industrial waste discharge permit takes precedence over a state-issued waste discharge permit .	We have no disagreement, would just like to discuss the intent of this statement.	Ed Abbasi /Despina	Outdated shell language was replaced with Pretreatment language from West Point permit, minus CSO-related requirements.

Comment Number	Page	Section/ permit or factsheet	Comments	Suggested Resolution/Change	Commentor	Ecology Response
17	24	S.6.A.1.j Pretreatment - general	SP S.6.A1.j includes the statement "In addition, the Permittee must develop a Memorandum of Understanding (or Inter-local Agreement) that outlines the specific roles, responsibilities, and pretreatment activities of each jurisdiction.	As in all other KC permits we have had this statement removed since we already have legal/contractual requirements in place. We suggest this be removed.	Betsy Cooper	Outdated shell language was replaced with Pretreatment language from West Point permit, minus CSO-related requirements.
18	24	S.6.A2. Pretreatment - general	This section requires development and submission of an updated Accidental Spill Prevention Program by April 30th 2019	This is a new requirement. Please explain what is the intent of the requirement and to what facilities, Industries it is to be applied.	Betsy Cooper	Outdated shell language was replaced with Pretreatment language from West Point permit, minus CSO-related requirements.
19	25	S6.A 5 Pretreatment	Pretreatment Report due date of March 31.	We would like to request Ecology change the due date for the Pretreatment Report from March 31 to April 30. This is to allow KC staff more time to compile all the data and review it before submitting the report. Much of the data needed for the report isn't available until late January to mid-February with a very short window to process and review. This will also allow for additional QC steps and the needed review steps for such additional QC.	Despina Strong	OK to shift submittal date by one month. However KC knows West Point submittal will remain at March 31st until next permit issuance; Despina stated KC will continue to meet this comliance requirement. Start new date with S Plant and eventually all other facilities will fall in line.
22	26	S.6.B.9 Pretreatment - general	This is a new language in S.6.B.9 with RSP that is missing from West point; "Sludge metals priority pollutant sampling and analysis must conform to U.S. EPA SW 846 6000/7000 Series Methods unless the Permittee requests an alternate method and Ecology has approved" . However these methods are for water samples only.	Indicate only that the methods must be approved by Ecology rather than require specific methods. Or like the metals comment further on, mandate that the GC/MS data must conform to the U.S. EPA SW 846 8000 Series Methods for GC/MS volatile and semi-volatile samples.	Environmental Lab	Outdated shell language was replaced with Pretreatment language from West Point permit, minus CSO-related requirements.
23	26	Permit S6(B)* in conjunction with Appendix A	This section refers handling, preparing and analyzing "all wastewater samples" with "EPA Methods 624 and 625". However it raises two questions 1) these methods are not appropriate for the sludge or other solids analyses which some might consider part of the requirement described in Section S.6.B.8. and 2) since the statement is in the Pretreatment Section of the permit, it could also be considered applying to wastewaters other then are treatment plants, such as Permittees.	We suggest this section should be consistent with WP by requiring procedure approved by 40 CFR 136 and SW 846 depending on the matrix instead of specific methods.	Environmental Lab/Abbasi/ Strong	Outdated shell language was replaced with Pretreatment language from West Point permit, minus CSO-related requirements.
26	29	Main Permit /S9.B.	calls for report of sediment data by August 31,2018	We request that date be modified to December 31, 2018 - the same period for report prep as in the West Point permit	Betsy Cooper	Dates changed to Dec 1, 2018 for consistency with WP permit. Also changed the SAP submittal to Dec 1, 2016 to be consistent with WP permit.
29	NA	Permit / Fact Sheet	General Comment: Since Ecology is issuing several NPDES permits to King County, could it consider creating a stand alone appendix for pretreatment program? Currently NPDES permits issued to two of King County's facilities have different requirements; A stand alone Pretreatment appendix could be updated every time a permit is issued and be effective in all active permits. The issue is consistency with compliance across plant areas.	This is a suggestion for Ecology to consider. It is has merit perhaps it could be instituted for the next permit renewal (BW).	Ed Abbasi /Despina	Agreed, something to consider with BW issuance. For this permit, the Pretreatment language was replaced with West Point language minus CSO-related requirements. KC requests all 5 facilities to be consistent, maybe an appendix that gets updated with each permit issuance. 'Appendix B'? or separate document.

Public Review Comments

Ecology received comments from King County and the Puget Soundkeeper Alliance during the 30-day public notice period. While drafting responses to these comments, Ecology noted and corrected typos in *Table 6* for BOD_5 and TSS effluent data.

King County's comment: "EPA is currently in the process of updating a number of sections under the 40 CFR Part 136 Clean Water Act [Update Rule for the Analysis of Effluent Proposed Rule: Vol. 80, No. 33, Thursday February 19, 2015]. While King County is commenting directly to EPA on many aspects of these proposed changes, due to the timing of the South Plant's NPDES new permit, we feel we should also provide comments to the WDOE during the permit renewal process regarding the impacts of the proposed changes. The proposed Determination of the Method Detection Limits portion of the 40 CFR Part 136 Clean Water Act will have a significant impact on our ability to fully comply with the proposed permit criteria listed in Appendix A.

EPA's proposed revisions to Appendix B, Part 136 (Definition and Procedure for the Determination of the Method Detection Limit – Revision 2) are specifically designed to make Method Detection Limits (MDLs) more "realistic" (i.e. higher) than the current procedure. Once promulgated, these changes require lab results to be collected over the course of a full year, therefore we can't predict at this time how much our MDLs will increase with the new procedure. While we know that we can meet the Appendix A MDLs with EPA's current MDL procedure (in reagent water), we are much less optimistic that this will be the case if the proposed EPA Rule is adopted as it is currently stated.

It is worth noting that the EPA has listed method-specific MDLs for many of the compounds in DOE's Appendix A, and that most are significantly higher than the listed MDLs in Appendix A. EPA anticipates that these method-listed MDLs will be achievable with the new procedure. We therefore would like to suggest to DOE that the permit writers include some language into our current draft permit that would allow enough flexibility for possible changes to Appendix A to account for EPA's proposed rule changes. Ideally this could occur without having to reopen the permit. Another possible approach would be to use the EPA method listed MDLs for methods 608, 624, and 625 in Appendix A since we are reasonably confident that we could meet these limits even with the new MDL procedure."

Ecology's response: *Ecology and the County have been in discussions regarding EPA's proposed revisions to 40 CFR Part 136. Until EPA's proposed updates are finalized, the County has agreed to strive to meet the method detection limits (MDLs) and quantifications limits (QLs) in Appendix A of active permits. If an MDL and/or QL cannot be achieved, the King County Environmental Labs will conduct additional QC samples on sample batches. They will use low level matrix spikes to show that the analysis was not able to meet the Appendix A detection limits in the given matrix. The County will submit a detailed description of the additional analysis with the priority pollutant data.*

Once EPA promulgates the updates to 40CFR 136 and it becomes clear how the changes will impact analytical methods, Ecology will engage the County in discussions on how to move forward to ensure both the requirements of the active permits and the revised methods can be met.

Puget Soundkeeper Alliance's comments (via Smith & Lowney, P.L.L.C.):

Comment #1: "The King County South Wastewater Treatment Plant ("County Plant") is one of the single largest wastewater discharges to Puget Sound, adding up to almost 150 million gallons per day of treated municipal wastewater to the Sound. The contamination of Puget Sound by toxic pollutants is widespread and well-documented. Waste streams comprising the County's Plant's influent are heterogeneous and include not only domestic wastewater but also industrial discharges from a wide variety of industrial facilities, as well as stormwater from urban streets and facilities. Consequently, a wide spectrum of toxic pollutants is introduced to

the County Plant and many of these can be expected to pass through the County Plant because they are not susceptible to efficient or effective removal by the treatment works. These pollutants are likely to include persistent bioaccumulative toxics ("PBTs"), such as PCBs, flame retardants, and pharmaceuticals. The permit should include rigorous effluent monitoring to determine whether toxic pollutants are being discharged at levels of concern, which would warrant the addition of effluent limitations or implementation of other measures to reduce or eliminate these discharges. As one of the largest dischargers operated by the largest county in the state, one that depends intimately on the health of Puget Sound for its economy and quality of life, the County Plant is an excellent place to start enhanced efforts to detect and control discharges of the numerous toxic pollutants that threaten the Sound.

While the draft permit does include a monitoring requirement for the EPA list of priority pollutants, this is inadequate to the task. First, the priority pollutant list excludes numerous toxic pollutants that are likely to be found in the discharge and that ought to be subject to NPDES regulatory controls in fulfillment of federal objectives to eliminate toxic discharges, 33 U.S.C. § 1251(a)(3), and the mandates of state law, RCW 90.48.010 and .520. A recent report by the EPA Office of the Inspector General (Report No 14-P-0363, Sept. 29, 2014, "More Action Is Needed to Protect Water Resources From Unmonitored Hazardous Chemicals") describes an aspect of this problem. Consistent with the findings of this report, a review of the toxic release inventory ("TRI") reports submitted by the Significant Industrial Users listed in the draft fact sheet appendix F reveals that the following facilities have reported discharges of toxic pollutants that are not among those on the priority pollutants list:

Boeing Commercial Airplane Group – Renton: diethanolamine, methyl isobutyl ketone, toluene
Boeing Commercial Airplane Group – Auburn: hydrogen fluoride, methyl isobutyl ketone, toluene
Hexel Corp.: tetrabromobisphenol A
Kenworth Truck Co.: ethylene glycol
Protective Coatings: N-butyl alcohol, nitric acid
Rexam Beverage Can Co: hydrogen fluoride, N-butyl alcohol
Western Pneumatic Tube Co.: hydrogen fluoride, nitric acid

The permit should require screening monitoring for these and other toxic pollutants that are likely to be present in the discharge."

Ecology's Response to Comment #1: Ecology appreciates the comments concerning the potential for toxicity in the South Plant WWTP discharge. In developing this permit, Ecology used priority pollutant data that King County collected from the South Plant WWTP effluent 22-29 times (depending on the pollutant) during the previous 5 year permit term. A summary of the priority pollutants that were detected in the effluent is included in Table 6 of this fact sheet (toluene was tested as required but was below detection, <1 ug/L, in all 23 samples). In addition to the required priority pollutant monitoring, King County conducted analysis on parameters such as PCB arochlors (see data in the response to comment #3 below). Ecology would be happy to provide the Puget Sound Alliance or other interested parties with this data if requested.

Ecology has established criteria for approximately 160 pollutants based on the National Toxics Rule (40 CFR 131.36) and the EPA National Recommended WQ Criteria (2004, 69 FR 342) (see WAC 173-201A). Ecology performed a reasonable potential analysis for each pollutant detected in the effluent for which a water quality standard has been established to determine the potential for a water quality exceedance (see Appendix E of the fact sheet). Ecology set a limit for chlorine based on this analysis and determined that all other parameters in the South Plant WWTP effluent meet their respective criteria.

While it may seem ideal to characterize the effluent for the pollutants listed above from the various industrial dischargers, Ecology considers other factors in determining monitoring requirements. N-butyl alcohol and ethylene glycol (automotive antifreeze) are both amenable to biological breakdown during biological treatment

at the sewage treatment plant; these organic compounds are food for the bacteria. Nitric acid breaks down to its molecular components of hydrogen, nitrogen, and oxygen. Individual chemicals from industrial processes are often undetectable after mixing with the other sewerage flows in the system. Ecology does not require monitoring for some of these parameters because (1) Washington State has not promulgated surface water criteria for the parameter, (2) pretreatment activities remove or greatly reduce the pollutant at the source, and/or (3)the pollutant is diluted or converted and is therefore not detectable in the effluent.

Often times the appropriate control method is to prevent the pollutant from entering the collection system through a reliable pretreatment program. This approach is supported by federal regulations. King County's Industrial Waste Program (KCIW) is responsible for regulating permitted and authorized discharges from significant industrial users. Ecology delegated pretreatment authority to King County and inspects their program annually. KCIW screens each industrial user individually and sets case-by-case local limits for PCB (Aroclor) and other pollutants with the aim to ensure industrial discharges do not contribute pollutants at levels that will cause measurable levels in the biosolids or exceed safe employee exposure levels. Occasionally KCIW sets limits for pollutants that do not have water quality criteria in order to minimize employee exposure. As part of KCIW's permit renewal process, they require base neutral acid and PCB characterization at select facilities to ensure pretreatment requirements continue to be met. In addition to meeting the case-specific limits, all potential dischargers of PCBs are required to use best practical treatment technology (usually granular activated carbon filtration) and to sample each batch after treatment and prior to discharge to the WWTP collection system. At this time, Ecology believes KCIW is doing an exemplary job and that the pretreatment requirements of permit condition S6 are appropriate for source characterization.

Another method Ecology uses to assess effluent toxicity is whole effluent toxicity (WET) testing. WET testing is a regulatory tool under the Clean Water Act that captures the effects of additive toxicity and other possible toxicity interactions specific to a given effluent. WET testing involves exposing living organisms (vertebrates, invertebrates) to set concentrations of the permitttee's effluent over a period of time and recording the results. WET testing is performed to determine both the acute (short term) and the chronic (longer term) effects of the effluent on sensitive species. The permittee must meet specific WET performance standards. For acute toxicity, a median of at least 80% survival in 100% effluent with no single test showing less than 65% survival in 100% effluent must be observed. For chronic toxicity, no toxicity in a concentration of effluent representing the edge of the acute mixing zone may be observed. More information regarding WET testing can be found at Ecology's WET testing website (http://www.ecy.wa.gov/programs/wq/wet/index.html). WET testing results for the South Plant WWTP are presented in Appendix D for 1997-2013. This facility passed all WET tests with greater than 95% survival of all species in 100% effluent concentration during the previous permit term. The WET testing frequency in the permit reflects South Plant's past WET performance and is consistent with the application of the WET requirements.

The proposed South Plant NPDES permit requires semi-annual monitoring of the priority pollutants listed in Appendix A of the permit (including conventional parameters, metals, cyanide, total phenols, acid compounds, volatile compounds, and base neutral compounds including several persistent bioaccumulative toxics). Additionally, the pretreatment section of the permit (Section 6) requires quarterly metals monitoring and annual organics monitoring of the influent, effluent, and biosolids. In response to this comment, Ecology is adding PCBs to the monitoring requirements so these pollutants can be better assessed during the next permit issuance. Ecology believes this level of monitoring provides adequate data to reassess compliance with the State's water quality standards at the next permit issuance.

In general, this comment applies more to Ecology's agency-wide policies, application of the State's WQ standards, and the sufficiency of EPA's National Toxics Rule, rather than to how these standards were applied to this individual permit. Ecology developed this permit consistent with the State's water quality standards, the methods described in its Permit Writers' Manual, and relevant Federal laws and rules.

Comment #2: "Second, screening monitoring is ineffective if the laboratory analytical methods used have detection and quantitation levels far in excess of pollutant concentrations of concern. Rather than default to the EPA-approved analytical methods for toxics screening, Ecology should evaluate the availability of newer and superior analytical methods and require their use for toxic pollutant screening wherever appropriate."

Ecology's Response to Comment #2: Ecology agrees that analytic detection and quantitation levels must be low enough to ensure compliance with water quality criteria. Ecology added Appendix A to its permit for this very reason to ensure permittees meet the detection and quantitation levels necessary for adequate assessment. Consistent with WAC 173-201A-260(3)(h), Appendix A was developed in accordance with the "Guidelines Establishing Test Procedures for the Analysis of Pollutants" (40 C.F.R. Part 136). Use of Part 136 test methods is required by 40 CFR Part 122.41(j)(4).

In general, this comment applies more to Ecology's agency-wide policies and application of the State's WQ standards and EPA required testing methods, rather than to how these standards were applied to this individual permit. Ecology developed this permit consistent with the State's water quality standards, the methods described in its Permit Writers' Manual, and relevant Federal laws and rules. Furthermore, Puget Soundkeeper Alliance filed an appeal of NPDES permit WA0031968 (PCHB 13-137). Puget Soundkeeper Alliance had a full and fair opportunity to raise this same issue before the PCHB during that appeal. Ecology will continue to follow the required testing methodologies set out in federal regulations until the rule is altered by EPA or some other relevant legal determination is made.

Comment #3: "Relatedly, the fact sheet reports (pp. 35 – 36) that a statistical reasonable potential determination for the 91 numeric human health-based criteria established under the National Toxics Rule ("NTR") was negative, eliminating the need for numeric effluent limitations for these 91 pollutants. Draft fact sheet appendix E seems to indicate that a dilution factor of 428 was used in these calculations. Soundkeeper objects to the use of mixing zones or dilution factors for PBTs, including those assigned criteria under the NTR. EPA has repeatedly cautioned that mixing zones are inappropriate to PBTs, and has even banned them from the Great Lakes. Mixing zones should be disallowed "because [bioaccumulative chemicals of concern, "BCCs," also known as PBTs], due to their persistent and bioaccumulative nature, are incompatible with mixing zones. By definition, BCCs are chemicals that do not degrade over time. These chemicals accumulate in organisms living in the water and become more concentrated as they move up the food chain – from biota to fish and wildlife to humans. Because the effects of these chemicals are not mitigated by dilution, using a mixing zone to 'dilute' BCC discharges is not appropriate." 65 Fed.Reg. 67638, 67640-641 (Nov. 13, 2000).

Soundkeeper notes that there are fish consumption advisories in place for Puget Sound in the vicinity of the discharge based on PBT fish tissue contamination, that there are 303(d)-listings for PBTs in the Sound, and that the Sound has a well-documented PCB contamination problem. Given these factors, Soundkeeper asserts that, with respect to the PBTs present in the County Plant discharge, Ecology has not and cannot identify "supporting information that clearly indicates that the [outfall 001] mixing zone would not have a reasonable potential to cause a loss of sensitive or important habitat, substantially interfere with the existing or characteristic uses of the water body, result in damage to the ecosystem, or adversely affect public health," which means that no mixing zone may be authorized under WAC 173-201A-400(4). Accordingly, the reasonable potential analysis for NTR human health criteria for PBTs should be redone without consideration of dilution."

Ecology's Response to Comment #3: We understand and appreciate the concern over elevated levels of PCBs in aquatic species in the Puget Sound. The best approach for PCB reduction is through source control. King County's Industrial Waste Program is actively identifying and eliminating sources of PCBS as described in the response to comment #1 above. The limited data available show PCBs consistently below detection as shown below:

South Plant WWTP Effluent – Total Aroclor data

Collection Date	Method	Value	MDL, ug/L	RDL, ug/L
8/1/2011	EPA 608	<MDL	0.24	0.472
8/2/2011	EPA 608	<MDL	0.24	0.472
8/3/2011	EPA 608	<MDL	0.24	0.472
3/5/2012	EPA 608	<MDL	0.12	0.472
3/6/2012	EPA 608	<MDL	0.12	0.472
3/7/2012	EPA 608	<MDL	0.12	0.472
8/20/2012	EPA 608/SW846 3520C*8082A	<MDL	0.059	0.236
8/21/2012	EPA 608/SW846 3520C*8082A	<MDL	0.059	0.236
8/22/2012	EPA 608/SW846 3520C*8082A	<MDL	0.059	0.236
2/6/2013	EPA 608/SW846 3520C*8082A	<MDL	0.094	0.377
2/4/2013	EPA 608/SW846 3520C*8082A	<MDL	0.094	0.377

This data illustrates that the South Plant WWTP effluent easily meets the acute aquatic life criteria of 10 ug/L, and, while the detection limits are higher than the chronic aquatic life criteria of 0.03 ug/L, no sample shows an exceedance of these detection limits, with 3 samples tested as below 0.059 ug/L. Ecology understands that EPA is revisiting EPA method 608 for PCBs to refine the methodology. Furthermore, in its challenge to NPDES permit WA0031968 (PCHB 13-137), Puget Soundkeeper Alliance had a full and fair opportunity to raise this same issue before the PCHB. Ecology will continue to follow the required testing methodologies set out in federal regulations until the rule is altered by EPA or some other relevant legal determination is made.

In general, this comment applies more to Ecology's agency-wide policies and application of the State's WQ standards than to how these standards were applied to this individual permit. Ecology developed this permit consistent with the State's water quality standards and the methods described in its Permit Writers' Manual. The human health criteria were calculated taking bioaccumulation factors into consideration. The standards allow mixing zones for those human health parameters and those standards were implemented in the draft South Plant WWTP NPDES permit.

Ecology did consider the narrative criteria described in Chapter 173-201A-260 WAC when it determined permit limits and conditions. Ecology considered the narrative criteria when it evaluated the characteristics of the wastewater and implementation of all known, available, and reasonable methods of treatment and prevention (AKART) as described in the technology-based limits section of the fact sheet. When Ecology determined that the facility is meeting AKART it considered the pollutants in the wastewater and the adequacy of treatment to prevent the violation of narrative criteria.

Comment #4: "Soundkeeper also has serious concerns about water quality protection with regard to the outfall 002 discharge to the Green River. The draft fact sheet explains that a dilution factor of 5 accompanies the mixing zone granted for the Green River discharge. There is no reference to a receiving water or mixing zone study for this discharge – was one prepared? If not, what is the basis for its establishment and the assignment of a dilution factor of 5? It appears that, while the dilution factor is identified as 5 in a couple of places, the footnote to the monitoring table on draft permit p. 10 states it as "= [0.25 * River Flow, MGD]/[Effluent Flow, MGD]." What is the dilution factor for this outfall and on what is it based?

The purported Green River mixing zone is also not adequately described in the draft permit in violation of WAC 173-201A-400(1) and WAC 173-220-130(3)(c) (requiring that permits specify the "dimensions" of a mixing zone). Neither the shape nor the horizontal distance across the river are specified. One result of this

inadequate description is the inability to discern whether the mixing zone comports with the restriction to 25% the width of the river. WAC 173-201A-400(7)(a)(iii). What shape is the mixing zone and how wide is it?"

Ecology's Response to Comment #4: Ecology's approach to the mixing calculation for the Green River maintenance discharge differs from other WWTP discharges due to the infrequent discharge events (one four hour discharge in the past 5 years) and uncertain receiving water conditions during the short discharges. The NPDES permit allows for a discharge through the Green River outfall for maintenance purposes only. To minimize impacts to migrating salmon, King County consulted with the Washington State Department of Fish and Wildlife to schedule maintenance discharges around fish passage windows. Ecology wants to encourage this approach and therefore is proposing a sliding calculation to limit effluent flow to assure compliance with water quality criteria. Instead of using the critical flow condition for the mixing calculation, Ecology is proposing to use real-time river flow to ensure adequate mixing occurs during the actual discharge.

Ecology conducted a reasonable potential analysis using effluent priority pollutant data (see Appendix E), and concluded that a dilution factor of 5 is (1) conservative (the previous permit included a dilution factor of 9) and (2) minimizes the mixing zone while assuring compliance with the criteria. Based on these results, the proposed permit limits effluent flow based on the river flow during the time of discharge. The proposed permit includes the following limits on the Green River discharge:

1. *Effluent flow must be less than or equal to [0.25 * River Flow]/5. This limits mixing to 25% of the river flow, consistent with WAC 173-201A-400 (7)(a), and assures a minimum dilution factor of 5 (sufficient dilution to meet water quality criteria).*
2. *The duration of the discharge must not exceed four (4) hours.*
3. *The Permittee may discharge only when the Green River flow is greater than 500 cfs.*

This approach is consistent with WAC 173-201A-400(7)(a). Due to limited resources and the infrequent nature of this discharge, Ecology is proposing to limit the mixing zone to 25% of the river flow as described in WAC 173-201A-400(7)(a)(ii). Since this diffuser extends 44 feet into the river with 8 discharge ports, mixing, and therefore dilution, will occur fairly rapidly. The proposed permit also requires monitoring 300' downstream of the diffuser to monitor impacts to the receiving water.

The mixing zone for outfall 002 is greater than 25% of the width of the river, because the diffuser is 44 feet long and the river width is approximately 100 feet. Exceptions to the numeric size criteria for mixing zones are allowed by WAC 173-201A-400(12) in cases where the discharge existed prior to November 24.1992.

In response to this comment, Ecology added a mixing zone diagram in Section III.C of the fact sheet and a mixing zone analysis to Appendix E. The mixing zone analysis confirms that a dilution greater than 5 is achieved before the acute mixing zone boundary 31 feet downstream of the diffuser.

Comment #5: "Soundkeeper also doubts that consideration of a Green River mixing zone and dilution factor in reasonable potential analysis for the PBTs present in the County Plant's effluent is appropriate for the same reasons as it is inappropriate for outfall 001. Although discharged at relatively low concentrations, the substantial flow volume may result in significant and harmful loads of toxic pollutants to the Green River. Specific to PCBs, recent King County ambient water quality data indicates that the Green River violates the ambient NTR criteria for PCBs. Of course, the Green River flows into the Duwamish, which is very heavily contaminated with PCBs and the subject of a Superfund cleanup effort. There is no remaining assimilative capacity in the Green River for PCBs and possibly for other toxic pollutants, so no mixing zone should be allowed. *See, e.g.,* 63 Fed.Reg. 36742, 36791 (July 7, 1998) ("EPA's mixing zone guidance emphasizes that the determination by a State or Tribe that a mixing zone is appropriate must be preceded by a separate determination that there is available assimilative capacity in the receiving water."); Water Quality Standards Handbook, EPA-820-B-14-004 (Sept. 2014) at 5.1.2. Ecology has not and cannot identify "supporting

information that clearly indicates that the [outfall 002] mixing zone would not have a reasonable potential to cause a loss of sensitive or important habitat, substantially interfere with the existing or characteristic uses of the water body, result in damage to the ecosystem, or adversely affect public health," with regard to PCBs, other PBTs, and toxic pollutants in general, which means that no mixing zone may be authorized under WAC 173-201A-400(4)."

Ecology's Response to Comment #5: The Green River maintenance discharges occur infrequently (only one occurrence in the past 5 years) and for very short durations (limited to 4 hours maximum). The secondary treated effluent is expected to have de minimis PCB loading to the Green and Duwamish Rivers. With that said, Ecology assessed compliance with water standards by performing reasonable potential analyses for each pollutant detected in the South Plant's effluent. This analysis looks at the quantities of pollutants in the effluent and determines whether the aquatic life or human health will be negatively impacted based on the water quality criteria. The analysis can be found in Appendix E of the fact sheet. Based on these calculations, Ecology is confident the States's water quality standards will be met if the County meets the permit's flow and duration restrictions for the Green River discharges.

However, again, this comment applies more to Ecology's agency-wide policies and application of the State's WQ standards than to how these standards were applied to this individual permit. Ecology developed this permit consistent with the State's water quality standards and the methods described in its Permit Writers' Manual. The human health criteria were calculated taking bioaccumulation factors into consideration. The standards allow mixing zones for those human health parameters and those standards were implemented in the draft South Plant WWTP NPDES permit. Additionally, Puget Soundkeeper Alliance's appeal of NPDES permit WA0031968 (PCHB 13-137) provided it with full and fair opportunity to raise these types of policy issues before the PCHB.

Ecology is in the process of modifying the state's water quality standards for toxics (173-201A WAC) in light of updated fish consumption data. Ecology solicited comments during the public review period which ended March 23, 2015. Hopefully Puget Soundkeeper Alliance provided comments during that process. Final adoption of the new rule is expected in July or August 2015.

Comment #6: "The draft fact sheet discusses sediment monitoring in the vicinity of outfall 001, and describes the periodic violations of sediment quality standards for toxics found, as well as Ecology's determination of reasonable potential for sediment impacts at outfall 001 based on facility characteristics. Where is the evaluation of sediment impacts on the maintenance discharge to the Green River? Shouldn't the sediment reasonable potential determination also apply to the Green River discharge? Potential Green River sediment impacts must be evaluated under WAC 173-204 Part IV. If such potential exists, the County Plant must seek a sediment impact zone or comply with effluent limitations adequate to ensure against sediment quality standards violations. The draft permit appears not to include such limitations."

Ecology's Response to Comment #6: Ecology is confident that the very infrequent maintenance discharges of secondary treated effluent to the Green River will not measurably alter the sediment chemistry in the vicinity of the outfall. These discharges occur approximately once every 4-5 years and are limited by the permit in volume and duration (limited to 4 hours). In addition, the facility is very efficient at removing solids; the average TSS concentration over the past 5 years was 11 mg/L. The reason for the Green River discharge is to clear accumulated sediments, due to river transport, away from the outfall's diffuser ports. The transport of sediment in the Green river is substantial and any sediment monitoring that could be required would not represent or align with the very infrequent and intermittent nature of treated secondary effluent to Green River. Ecology has collected sediment data from many WWTP outfalls that discharge <u>continuously</u> and have found the vast majority of sites meet sediment quality standards.

THIS PAGE INTENTIONALLY LEFT BLANK

APPENDIX B

Service Agreements

THIS PAGE INTENTIONALLY LEFT BLANK

RESOLUTION R-5048

A RESOLUTION OF THE CITY COUNCIL OF THE CITY OF KIRKLAND AUTHORIZING THE CITY MANAGER TO SIGN THE 2014 AMENDMENT TO THE AGREEMENT FOR SEWAGE DISPOSAL BETWEEN THE CITY OF KIRKLAND AND KING COUNTY.

WHEREAS, King County and the City of Kirkland entered into a long-term agreement for sewage disposal dated May 5, 1961, as amended and previously extended on April 19, 1973, March 19, 1987, and October 2, 1992, (collectively referred to as the "Basic Agreement"); and

WHEREAS, the County and City have negotiated certain proposed amendments to the Basic Agreement including exploring and partnering on the provision of recycled water; and

WHEREAS, the proposed amendments further include coordination on several operational issues and steps for collaboration; and

WHEREAS, the proposed extension of the Basic Agreement, with the proposed amendments, would be for a period of 20 years or until July 1, 2056; and

WHEREAS, the Council finds that it is in the best interest of the residents of the City of Kirkland to approve the 2014 Amendment to the Agreement for Sewage Disposal;

NOW, THEREFORE, be it resolved by the City Council of the City of Kirkland as follows:

Section 1. The City Manager is authorized to sign the 2014 Amendment to Agreement for Sewage Disposal attached as Attachment A to this Resolution and incorporated by reference.

Passed by majority vote of the Kirkland City Council in open meeting this 6th day of May, 2014.

Signed in authentication thereof this 6th day of May, 2014.

MAYOR

Attest:

City Clerk

CITY OF KIRKLAND

KING COUNTY

2014 AMENDMENT TO AGREEMENT FOR SEWAGE DISPOSAL

THIS AMENDMENT made as of the 30th day of December, 2014 between the City of Kirkland, a municipal corporation of the State of Washington (hereinafter referred to as "the City") and King County, a political subdivision of the State of Washington (hereinafter referred to as "the County");

A. WHEREAS, the County and the City have entered into a long-term agreement for sewage disposal dated May 5, 1961, as amended and previously extended on April 19, 1973, March 19, 1987 and October 2, 1992 (hereinafter collectively referred to as the "Basic Agreement"); and

B. WHEREAS, the County and City have discussed certain changes to, and a second extension of, the Basic Agreement; and

C. WHEREAS, the County and City have also agreed to coordinate on several operational issues and the steps for collaboration are outlined in Exhibit A to this Amendment;

D. WHEREAS, the City has agreed in principle to the County's proposed extension and amendments to the Basic Agreement which benefit the County's wastewater ratepayers; and

F. WHEREAS, the County and the City concur that the below changes and extension of the Basic Agreement are in the best interests of the parties and the ratepayers of both the City and the County;

NOW, THEREFORE, IT IS HEREBY AGREED AS FOLLOWS:

Section 1. Amendment of Basic Agreement. Section 5.3 of the Basic Agreement is amended by adding the following new subparagraph (d). The additional charge described in this subparagraph 5.3(d) shall not be made until and unless this new subparagraph (d) is included

within the sewage disposal agreements of all other Participants.

"(d) An additional charge may be made to recover unforeseen costs to operate and maintain the metropolitan sewerage system or meet debt requirements if the County Executive declares and the County Council by a supermajority vote (two thirds of members) finds that an emergency exists and the system cannot be adequately maintained, and debt requirements or debt policies met, without such additional charge. The additional charge shall then be effective no earlier than the first day of the fourth month following the emergency declaration described in this subparagraph 3(d) and shall be billed and collected in the same manner as the monthly rate referenced in subparagraph 3(c). The additional charge described in this subparagraph 3(d) may be incorporated into the next rate setting cycle but will otherwise terminate within twelve months of the effective date."

Section 2. Amendment of Basic Agreement. Section 5.4 of the Basic Agreement is amended by deleting the section and replacing it with the following:

"4. (a) The County shall impose a charge or charges (hereinafter the capacity charge) directly on the future customers of a Participant for purposes of paying for capacity in Metropolitan Sewerage Facilities. The proceeds of the capacity charge shall be used only for capital expenditures or defeasance of outstanding revenue bonds prior to maturity. The capacity charge shall be set at a level to ensure that, in combination with the monthly sewer rate described in subsection 3 above, 95 percent of the costs incurred to provide the wastewater conveyance, treatment, and biosolids capacity to serve new customers are recovered from new customers, to the fullest extent permitted by applicable law."

(b) The City shall, at the County's request, provide such information regarding new Residential Customers and Residential Customer Equivalents as may be reasonable and appropriate for purposes of implementing the capacity charge."

Section 3. Amendment of Basic Agreement. The Basic Agreement is amended by deleting Section 18 and replacing it with a new Section 18 as follows:

"Section 18. Amendments. The City agrees to amend and hereby concurs in any amendment to this agreement which incorporates any changes in the terms for sewage disposal and payment therefore as may be proposed by the County and agreed to by at least 90 percent of the Participants and by those Participants that represent, in total, at least 90 percent of the residential customers and residential customer equivalents then served by the Metropolitan Sewerage System."

Section 4. Amendment of Basic Agreement. The Basic Agreement is amended by adding a new Section 19 as follows:

"Section 19. Option to Accept Other Amendments. If the Basic Agreements with any other Participants are amended or otherwise modified to include terms, conditions, or provisions not included in the Basic Agreement or this amendment, the City shall have the option of incorporating said terms, conditions or provisions into its Basic Agreement. The County shall then expedite and approve any amendments to the Basic Agreement as may be necessary and appropriate for such purpose."

Section 5. Amendment of Basic Agreement. The Basic Agreement is amended by adding a new Section 20 as follows:

"Section 20. Operational Issues Requiring Coordination between the City and County. Staff from the City and County have identified shared operational issues and interests as follows:

1. *Installation of a permanent back-up power source at WTD's Yarrow Bay Pump Station;*
2. *Use of additives and other technologies to remove fats, oils and grease from the local sewer system;*

3. *Potential for use of on-site sewage systems that are not designed to discharge into the sanitary sewer system;*

4. *Odor control at WTD's York Pump Station discharge;*

5. *Inspection of Kirkland's 72-inch stormwater outfall and bathymetry study beyond outfall area; and*

6. *Exploration of sustainable practices, such as serving Kirkland with recycled water.*

The City and County agree to work on these items in a cooperative manner as outlined in Exhibit A to this Amendment."

Section 6. Extension of Basic Agreement. The Agreement for Sewage Disposal between the King County and City of Kirkland dated May 2, 1961, as amended, is hereby extended for a period of 20 years and shall continue in full force and effect until July 1, 2056. The agreement dated May 2, 1961, as subsequently amended and extended shall constitute the entire Agreement for Sewage Disposal between the parties.

IN WITNESS WHEREOF, the parties have executed this agreement as of the day and year first written above; said agreement to be effective upon execution.

City of Kirkland

By Marilynne Beard

Title Deputy City Manager

Attest:

Anja Mullin

King County

By

Title Director, KC DNRP

Attest:

Paige E. Myers

EXHIBIT A

The City of Kirkland ("City") and the Wastewater Treatment Division of the King County Department of Natural Resources and Parks ("County") intend to work on the following items in a cooperative manner.

Section 1. Permanent Back-up Power at Yarrow Bay

A generator has been temporarily installed at the County's Yarrow Bay Pump Station to provide a back-up power source that will come on-line should the electrical feeds from two separate substations fail. This generator was installed by the Washington State Department of Transportation ("WSDOT") to comply with the City's permit requirements for WSDOT's SR 520 bridge construction project.

Prior to completion of the SR 520 project, the County agrees to purchase the generator from WSDOT, or a similar generator that will remain on-site as a back-up power source. The City will assist with its internal permitting to avoid delays through the permit system. The City will also assist the County with any necessary communications efforts to the surrounding community regarding retention of the generator on-site.

Section 2. Use of Additives to Reduce Fats, Oils and Grease (FOG)

Nationally, some sewer agencies are exploring the use of chemical, enzyme, or bacterial substances to break up FOG as it enters sewer lines. Concerns have been raised regarding the impact of additives to sewer pipes or wastewater treatment plant operations. Some emulsifying agents may cause other collection system or treatment plant problems down the line.

The County agrees to work with City staff to explore a possible pilot project for the use of additives or other FOG removing technologies in the city's sewer system, provided the County has the opportunity to review the proposed technology prior to its use and the technology complies with all applicable rules and regulations.

Section 3. Zero Discharge On-Site Wastewater Treatment Systems

The County strives for energy efficiency in its operations and incorporates sustainable features in many of its facilities. The County also stays abreast of technology developments and trends related to its industry. Technologies are emerging for on-site wastewater treatment systems that are designed not to discharge into the sanitary sewer system, although these buildings may still require a connection to the local sewer. These on-site systems are part of a wide range of opportunities in sustainable building technologies systems or fixtures that do not present a human or environmental health risk.

The County agrees to explore the impact of emerging technologies on the regional sewer system. This may result in establishing new policies including, but not limited to, protecting the County system if these new technologies overflow into the conveyance system. This also may involve charges if outfalls are activated and used.

Section 4. Odor Control at WTD's York Pump Station Discharge

The County will continue to assess its odor control efforts at its York Pump Station discharge, located near the intersection of 120th Avenue NE and NE 116th Street in the City of Kirkland. This will occur through the County's odor control task force and operations and maintenance at that location. The County commits to changing odor control filter medium on a regular cycle and will alert the City's Public Works Operations staff when the medium has been changed out.

Section 5. Stormwater Outfall at Third Street and Central Way

The City and County agree to coordinate, including a cost share of 50 percent, for the inspection (not to exceed total cost of $5,000) of the City's 72-inch stormwater outfall that is located near Third Street and Central Way. The City will lead the effort to complete inspection of the outfall. WTD's cost share for the inspection will not exceed $2,500.

The County will coordinate a bathymetry study (study of the underwater depth of the lake) for the lake area beyond the current outfall location. City will provide all existing information it has on file to date. The County's contribution to this study will not exceed $25,000. The results of the study will be reviewed with the City's Public Works Director to determine if further action is needed.

The County has recently upgraded the downtown pump station in the City of Kirkland with significant improvements to the wet well and pump systems. If an overflow occurs at the pump station within the first two years of full operation, the County agrees to fully address any environmental impacts to the area and will commit to repair the system problem as soon as practicable. The County and City commit to further discussions on solutions to this system if overflows impact the public swimming beach.

Section 6. Exploration of providing recycled water to the City of Kirkland

The City has expressed a desire to explore the use of non-potable recycled water as the Cross Kirkland Corridor is developed. The County agrees to meet and partner with the City on exploring this sustainable practice and work together to seek any grants that further the goal of increasing use of recycled water and moving forward with feasible projects.

CITY OF KIRKLAND

MUNICIPALITY OF METROPOLITAN SEATTLE

AMENDMENT TO AGREEMENT
FOR SEWAGE DISPOSAL

THIS AMENDMENT made as of the 2nd day of October, 1992 between the City of Kirkland, a municipal corporation of the State of Washington (hereinafter referred to as the "City") and the Municipality of Metropolitan Seattle, a metropolitan municipal corporation of the State of Washington (hereinafter referred to as "Metro");

WITNESSETH:

WHEREAS, the parties have entered into a long term Agreement for Sewage Disposal dated May 5, 1961, as amended (hereinafter referred to as the "Basic Agreement"); and

WHEREAS, an advisory committee composed of elected and appointed officials in the metropolitan area was appointed by the Metropolitan Council to examine the structure of Metro's charges to its participants; and

WHEREAS, said advisory committee, following extensive research, study and deliberations, has recommended certain changes in the structure of Metro's charges to its participants and implementation of said changes requires amendment of the Basic Agreement; and

WHEREAS, the parties have determined that the recommendations are in the best public interest and therefore desire to amend said Basic Agreement to implement said recommendations;

NOW, THEREFORE, it is hereby agreed as follows:

Section 1. Amendment of Section 5 of the Basic Agreement. Section 5 of the Basic Agreement is hereby amended to read as follows:

"Section 5. Payment for Sewage Disposal. For the disposal of sewage hereafter collected by the City and delivered to Metro the City shall pay to Metro on or before the last day of each month during the term of this Agreement, a sewage disposal charge determined as provided in this Section 5.

1. For the quarterly periods ending March 31, June 30, September 30 and December 31 of each year every Participant shall submit a written report to Metro setting forth:

(a) the number of Residential Customers billed by such Participant for local sewerage charges as of the last day of the quarter,

(b) the total number of all customers billed for local sewerage charges by such Participant as of such day, and

(c) the total water consumption during such quarter for all customers billed for local sewerage charges by such Participant other than Residential Customers.

The quarterly water consumption report shall be taken from water meter records and may be adjusted to exclude water which does not enter the sanitary facilities of the customer. Where actual sewage flow from an individual customer is metered, the metered sewage flows shall be reported in lieu of adjusted water consumption. The total quarterly water consumption report in cubic feet shall be divided by 2,250 to determine the number of Residential Customer equivalents represented by each Participant's customers other than single family residences.

Metro shall maintain a permanent record of the quarterly customer reports from each Participant.

The City's first quarterly report shall cover the first quarterly period following the date when sewage is first delivered to Metro and shall be submitted within thirty days following the end of the quarter. Succeeding reports shall be made for each quarterly period thereafter and shall be submitted within thirty (30) days following the end of the quarter.

2. (a) To form a basis for determining the monthly sewage disposal charge to be paid by each Participant during any particular quarterly period, Metro shall ascertain the number of Residential Customers and Residential Customer equivalents of each Participant. This determination shall be made by taking the sum of the actual number of Residential customers reported as of the last day of the next to the last preceding quarter and the average number of Residential Customer Equivalents per quarter reported for the four quarters ending with said next to the last preceding quarter, adjusted for each Participant to eliminate any Residential Customers or Residential Customer equivalents whose sewage is delivered to a governmental agency other than Metro or other than a Participant for disposal outside of the Metropolitan Area.

(b) For the initial period until the City shall have submitted six consecutive quarterly reports, the reported number of Residential Customers and Residential Customer equivalents of the City shall be determined as provided in this subparagraph (b). On or before the tenth day of each month beginning with the month prior to the month in which sewage from the City is first delivered to Metro, the City shall submit a written statement of the number of Residential Customers and Residential Customer equivalents estimated to be billed by the City during the

next succeeding month. For the purpose of determining the basic reported number of Residential Customers and Residential Customer equivalents of the City for such next succeeding month, Metro may at its discretion adopt either such estimate or the actual number of Residential Customers and Residential Customer equivalents reported by the City as of the last day of the next to the last preceding reported quarter. After the City shall have furnished six consecutive quarterly reports the reported number of Residential Customers and Residential Customer equivalents of the City shall be determined as provided in the immediately preceding subparagraph (a).

(c) If the City shall fail to submit the required monthly and/or quarterly reports when due, Metro may make its own estimate of the number of Residential Customers and Residential Customer equivalents of the City and such estimate shall constitute the reported number for the purpose of determining sewage disposal charges.

3. The monthly sewage disposal charge payable to Metro shall be determined as follows:

(a) Prior to July 1st of each year Metro shall determine its total monetary requirements for the disposal of sewage during the next succeeding calendar year. Such requirements shall include the cost of administration, operation, maintenance, repair and replacement of the Metropolitan Sewerage System, establishment and maintenance of necessary working capital and reserves, the requirements of any resolution providing for the issuance of revenue bonds of Metro to finance the acquisition, construction or use of sewerage facilities, plus not to exceed 1% of the foregoing requirements for general administrative overhead costs.

(b) To determine the monthly rate per Residential Customer or Residential Customer equivalent to be used

during said next succeeding calendar year, the total monetary requirements for disposal of sewage as determined in subparagraph 3(a) of this section shall be divided by twelve and the resulting quotient shall be divided by the total number of Residential Customers and Residential Customer equivalents of all Participants for the October-December quarter preceding said July 1st; provided, however, that the monthly rate shall not be less than Two Dollars ($2.00) per month per Residential Customer or Residential Customer equivalent at any time during the period ending July 31, 1972.

(c) The monthly sewage disposal charge paid by each Participant to Metro shall be obtained by multiplying the monthly rate by the number of Residential Customers and Residential Customer equivalents of the Participant. An additional charge may be made for sewage or wastes of unusual quality or composition requiring special treatment, or Metro may require pretreatment of such sewage or wastes.

4. The parties acknowledge that, by resolution of the Metropolitan Council, Metro may impose a charge or charges directly on the future customers of a Participant for purposes of paying for capacity in Metropolitan Sewage Facilities and that such charges shall not constitute a breach of this agreement or any part thereof. The proceeds of said charge or charges, if imposed, shall be used only for capital expenditures or defeasance of outstanding revenue bonds prior to maturity.

In the event such a charge or charges are imposed, the City shall, at Metro's request, provide such information regarding new residential customers and residential customer equivalents as may be reasonable and appropriate for purposes of implementing such a charge or charges.

5. A statement of the amount of the monthly sewage disposal charge shall be submitted by Metro to each

Participant on or before the first day of each month and payment of such charge shall be due on the last day of such month. If any charge or portion thereof due to Metro shall remain unpaid for fifteen days following its due date, the Participant shall be charged with and pay to Metro interest on the amount unpaid from its due date until paid at the rate of 6% per annum, and Metro may, upon failure to pay such amount, enforce payment by any remedy available at law or equity.

6. The City irrevocably obligates and binds itself to pay its sewage disposal charge out of the gross revenues of the sewer system of the City. The City further binds itself to establish, maintain and collect charges for sewer service which will at all times be sufficient to pay all costs of maintenance and operation of the sewer system of the City, including the sewage disposal charge payable to Metro hereunder and sufficient to pay the principal of and interest on any revenue bonds of the City which shall constitute a charge upon such gross revenues. It is recognized by Metro and the City that the sewage disposal charge paid by the City to Metro shall constitute an expense of the maintenance and operation of the sewer system of the City. The City shall provide in the issuance of future sewer revenue bonds of the City that expenses of maintenance and operations of the sewer system of the City shall be paid before payment of principal and interest of such bonds. The City shall have the right to fix its own schedule of rates and charges for sewer service provided that same shall produce revenue sufficient to meet the covenants contained in this Agreement.

<u>Section 2. Amendment of Section 6 of the Basic Agreement</u>. Section 6 of the Basic Agreement is hereby amended to read as follows:

"Section 6. Responsibility of the City. The City shall be responsible for the delivery to the Metropolitan Sewerage System of sewage collected by the City, for construction, maintenance and operation of Local Sewerage Facilities, and for the payment of all costs incident to the collection of such sewage and its delivery to the Metropolitan Sewerage System.

In addition, the City will undertake continual rehabilitation and replacement of its local sewage facilities for purposes of preventing, reducing and eliminating the entry of extraneous water into such facilities and will expend annually, averaged over five (5) years, an amount equal to two (2) cents per inch of diameter per foot of its local sewage facilities, excluding combined sewers and force mains, for said rehabilitation and replacement. The amount of this expenditure requirement may be increased from time to time by the Metropolitan Council to reflect general inflation. Rehabilitation and replacement projects undertaken pursuant to this section shall be constructed in accordance with criteria adopted by the Metropolitan Council and included in Metro's Rules and Regulations. In the event the City fails to comply with the rehabilitation and replacement expenditure requirements described in this section, the City shall pay such charge as may be determined by Metro for quantities of storm or ground water entering its Local Sewage Facilities in excess of the minimum standard established by the general Rules and Regulations of Metro.

Section 3. Amendment of Basic Agreement to Add a New Section. A new Section 18 shall be added to the Basic Agreement to read as follows:

"Section 18. Future Amendments. The City agrees to amend and hereby concurs in any amendment to this agreement which incorporates any changes in the terms for

sewage disposal and/or payment therefore as may be proposed by Metro and agreed to by those Participants that shall represent, in total, not less than 90% of the Residential Customers and Residential Customer Equivalents then served by the Metropolitan Sewerage System."

Section 4. Effective Date of Amendment. This amendment shall take effect at the beginning of the first quarter following the date first written above with quarters beginning January 1, April 1, July 1, and October 1.

Section 5. Basic Agreement Unchanged. Except as otherwise provided in this amendment, all provisions of the basic agreement shall remain in full force and effect as written therein.

IN WITNESS WHEREOF, the parties have executed this Agreement as of the day and year first written above.

CITY OF KIRKLAND

Terrence L. Ellis
City Manager

ATTEST:

City Clerk

MUNICIPALITY OF
METROPOLITAN SEATTLE

~~Gary Zimmerman~~
Chair of the Council

ATTEST:

Bonnie Mattson

CITY OF KIRKLAND

MUNICIPALITY OF METROPOLITAN SEATTLE

EXTENSION OF AGREEMENT FOR SEWAGE DISPOSAL

WHEREAS, the City of Kirkland (the "City") and the Municipality of Metropolitan Seattle (the "Municipality") are parties to a certain Agreement for Sewage Disposal (the "Agreement") dated May 5, 1961, as amended, pursuant to which the City delivers to the Municipality for treatment and disposal all the sewage and industrial wastes it collects from its service area; and

WHEREAS, the Agreement expires by its terms on July 1, 2016; and

WHEREAS, it is in the best interests of the City and the Municipality that the expiration date of the Agreement be extended in order to allow the Municipality to sell and issue its sewer revenue bonds with maturities extending beyond 2016;

NOW, THEREFORE, in consideration of the mutual covenants contained herein and in the Agreement, it is hereby agreed as follows:

The Agreement for Sewage Disposal between the City of Kirkland and the Municipality of Metropolitan Seattle dated May 5, 1961, as amended, is hereby extended for a period of twenty years and shall continue in full force and effect until July 1, 2036.

It is further agreed that all other provisions of said Agreement shall remain unchanged, and the Agreement dated May 5, 1961, as amended, as extended herein shall constitute the entire Agreement for Sewage Disposal between the parties.

DATED: This 19th day of March, ~~1985~~ 1987

CITY OF KIRKLAND

By Doris Cooper 11-15-85
Doris Cooper, Mayor

ATTEST:

Janice J. Kenny
Deputy City Clerk

MUNICIPALITY OF METROPOLITAN SEATTLE

By Gary A. Zimmerman
Gary Zimmerman
Chairman of the Council

ATTEST:

Bonnie Mattson
Bonnie Mattson
Clerk of the Council

Executed in 6 counterparts of
which this is counterpart No. 4

MUNICIPALITY OF METROPOLITAN SEATTLE

CITY OF KIRKLAND

1st SUPPLEMENTAL AGREEMENT
JOINT USE OF PORTION OF EASTSIDE INTERCEPTOR, SECTION 14

THIS AGREEMENT, made and executed as of this 19th day of June, 1973, between the CITY OF KIRKLAND, a municipal corporation of the State of Washington (hereinafter referred to as the "City"), and the MUNICIPALITY OF METROPOLITAN SEATTLE, a municipal corporation of the State of Washington (hereinafter referred to as "Metro");

W I T N E S S E T H:

WHEREAS, the parties have heretofore entered into a long-term agreement for Sewage Disposal dated May 5, 1961 (hereinafter referred to as the "Basic Agreement"); and

WHEREAS, the parties desire to amend certain portions of the Basic Agreement to reflect changed conditions and policies; and

WHEREAS, Metro has constructed the Eastside Interceptor, Section 14 (hereinafter referred to as the "Interceptor"), to serve as a facility of the Metropolitan Sewerage System; and

WHEREAS, the City desires to use portions of the Interceptor as a Local Sewerage Facility;

NOW, THEREFORE, in consideration of the mutual covenants contained herein, it is hereby agreed as follows:

Section 1. Definition of Terms. The defined terms used in this contract shall have the meanings set forth in the Basic Agreement. Where manhole numbers are referred to, reference is made to Metro Contract Document 64-10, Schedule 3 for the Eastside Interceptor, Section 14, copies of which are on file with Metro and the City.

Section 2. Amendment of Basic Agreement - Delivery and Acceptance of Sewage. Section 2 of the Basic Agreement is hereby amended to read as follows:

"Section 2. Delivery and Acceptance of Sewage. The City shall deliver to Metro all of the sewage and industrial waste collected by the City and Metro shall accept the sewage and waste delivered for treatment and disposal as hereinafter provided subject to such reasonable rules and regulations as may be adopted from time to time by the Metropolitan Council. Metro shall not directly accept sewage or waste from any person, firm or private corporation which is located within the boundaries of or is delivering its sewage into the Local Sewerage Facility of the City without the written consent of the City."

Section 3. Joint Use of Portions of Interceptor. The City and Metro agree that the interceptor between Manhole R02-71 and Manhole R02-72 shall serve as both a Metropolitan and a Local Sewerage Facility for such Participants as have authority to provide local service. The City shall have the right to make direct local connections to said sewer for which the City shall pay to Metro, before making said connection, the sum of $8.00 per front foot of property served on each side of the interceptor alignment; that is, a total of $16.00 per front foot of property served if local service is given on both sides of the interceptor. Said amount represents the estimated cost of providing sewer service by constructing an eight-inch (8") local sewer on the same alignment as the interceptor throughout that portion where local connections are allowed. Prior to any local connection, the City shall submit to Metro for approval a plot plan indicating the amount of frontage and property to be served, and shall

make payment to Metro of the agreed upon amount. Upon such approval and payment, the City shall own an eight-inch (8") equivalent share of the Interceptor where local service is given on both sides of the Interceptor, and one-half thereof where service is given on only one side. Local connections to the Interceptor may be made by the City in such a manner as shall be approved by Metro. The City shall hold Metro harmless from any loss, cost, charge, liability or expense resulting from or arising out of damage to the Interceptor or to the persons or property of others caused by the making of such connections or the City's failure to observe any covenant of this Agreement.

Section 4. Construction and Maintenance of Local Sewerage Facilities. The City shall construct, operate and maintain at its expense or cause others to construct, operate and maintain at their expense, and in good working order and condition, any side sewers or Local Sewerage Facilities connected to the Interceptor up to and including the tee connection. Metro shall have no responsibility for construction, operation or maintenance of such side sewers or Local Sewerage Facilities.

Section 5. Maintenance and Operation of Interceptor. Metro shall continue to operate, maintain and own all portions of the Interceptor except as otherwise expressly provided herein. The City shall have no responsibility for operation or maintenance of the Interceptor.

Section 6. Amendment to Basic Agreement - Termination. Section 12 of the Basic Agreement is hereby amended to read as follows:

> "Section 12. Effective Date and Term of Contract. This Agreement shall be in full force and effect and binding upon the parties hereto upon the execution of the Agreement and shall continue in full force and effect until July 1, 2016."

Section 7. Basic Agreement Otherwise Unchanged. Except as otherwise provided in this Agreement, all provisions of the Basic Agreement shall remain in full force and effect as written therein.

Section 8. Assignment. Neither of the parties hereto shall have the right to assign this agreement or any of its rights and obligations hereunder nor to terminate its obligations hereunder by dissolution or otherwise without first securing the written consent of the other party, and this agreement shall be binding upon and inure to the benefit of the respective successors of the parties hereto.

Section 9. Execution of Documents. This Agreement shall be executed in six counterparts, any one of which shall be regarded for all purposes as one original.

IN WITNESS WHEREOF, the parties have executed this Agreement as of the day and year first above written.

CITY OF KIRKLAND

By _____
Mayor William C. Woods

ATTEST:

_____

MUNICIPALITY OF METROPOLITAN SEATTLE

BY _____
C. Carey Donworth
Chairman of the Council

ATTEST:

_____
B. J. Carol
Clerk of the Council

STATE OF WASHINGTON)
) ss.
COUNTY OF KING)

On this 19th day of March, 1973, before me the undersigned, a Notary Public in and for the State of Washington, duly commissioned and sworn, personally appeared William C. Woods and Tom J. Anderson, to me known to be the Mayor Dir. of Admin. & Fin., respectively, of the CITY OF KIRKLAND, the Municipal Corporation that executed the foregoing instrument and acknowledged the said instrument to be the free and voluntary act and deed of said corporation for the uses and purposes therein mentioned and on oath stated that they were authorized to execute the said instrument and that the seal affixed is the corporate seal of said corporation.

WITNESS my hand and official seal hereto affixed the day and year in this certificate above written.

Arthur E. Knutson
Notary Public in and for the State of Washington, residing at Kirkland

STATE OF WASHINGTON)
) ss.
COUNTY OF KING)

On this 19TH day of APRIL, 1973, before me the undersigned, a Notary Public in and for the State of Washington, duly commissioned and sworn, personally appeared C. CAREY DONWORTH and B. J. CAROL, to me known to be the Chairman of the Council and Clerk of the Council, respectively, of the MUNICIPALITY OF METROPOLITAN SEATTLE, the municipal corporation that executed the foregoing instrument and acknowledged the said instrument to be the free and voluntary act and deed of said corporation for the uses and purposes therein mentioned and on oath stated that they were authorized to execute the said instrument and that the seal affixed is the corporate seal of said corporation.

Jack A. Hakola
Notary Public in and for the State of Washington, residing at SEATTLE

RH2 ENGINEERING, P.S.
RECEIVED JUL 17 1991
Date
File No.

Route To:	Seen:
JG	7/18 ✓
1316.07	

ORDINANCE NO. 835

AN ORDINANCE of the City of Kirkland, Washington, authorizing the execution of a contract for sewage disposal with the Municipality of Metropolitan Seattle containing provision for reimbursement to the city for the use of certain city sewerage facilities.

BE IT ORDAINED by the Mayor and City Council of the City of Kirkland as follows:

Section 1. The Mayor and Clerk are hereby authorized and directed on behalf of the City of Kirkland to enter into, execute and deliver a contract with the Municipality of Metropolitan Seattle which shall be substantially in the form set forth in Exhibit "A" attached hereto and by this reference made a part hereof.

Section 2. Said contract shall be executed in ten counterparts and shall bear the date of and be effective upon its execution by the Municipality of Metropolitan Seattle.

Section 3. This ordinance shall take effect upon its passage and publication in the manner provided by law.

ADOPTED by the Council of the City of Kirkland at a regular meeting thereof and approved by its Mayor this 15 day of May, 1961.

Mayor

ATTEST:

George A. Compton
City Clerk

I hereby certify that the foregoing is a true and correct copy of an Ordinance of the City of Kirkland and that the same was published or posted according to law, said Ordinance being No. 835 and entitled "An Ordinance as above.

Geo. A. Compton, City Clerk.

RESOLUTION NO. 87

A RESOLUTION of the Council of the Municipality of Metropolitan Seattle authorizing the execution of a contract for sewage disposal with the City of Kirkland.

WHEREAS, the Municipality of Metropolitan Seattle has heretofore adopted a comprehensive plan for the disposal of sewage for the Metropolitan Area; and

WHEREAS, it has determined that the acquisition, construction, operation and maintenance of the facilities required to carry out such plan is feasible; and

WHEREAS, in order to carry out said plan it is necessary and desirable that contracts be entered into with those cities and sewer districts desiring to deliver their sewage to the Metropolitan Sewer System for disposal; and

WHEREAS, the Municipality has considered the terms and conditions incident to the acceptance of sewage for disposal, including the charges necessary therefor;

NOW, THEREFORE, BE IT RESOLVED by the Council of the Municipality of Metropolitan Seattle as follows:

Section 1. That the Municipality shall enter into an agreement with the City of Kirkland providing for the disposal of certain sewage collected by the City and that such agreement shall be substantially in the form of Exhibit "A" attached hereto and by this reference made a part hereof.

Section 2. That the Chairman and Clerk of the Council be and they are hereby authorized and directed to execute such

contract on behalf of the Municipality to bear the date of and to be effective upon its execution by the City of Kirkland.

ADOPTED by the Council of the Municipality of Metropolitan Seattle at a regular meeting thereof held this 20th day of April, 1961.

/s/ C. Carey Donworth
C. Carey Donworth
Chairman of the Council

ATTEST:

/s/ Maralyn Sullivan
Maralyn Sullivan
Clerk of the Council

I, MARALYN SULLIVAN, duly selected, qualified and Clerk of the Council of the Municipality of Metropolitan Seattle, DO HEREBY CERTIFY that the foregoing resolution is a true and correct copy of Resolution No. 87 of said Council duly adopted at a regular meeting thereof held on the 20th day of April, 1961, signed by the Chairman of such Council in attendance at such meeting and attested by myself in authentication of such adoption.

Maralyn Sullivan
Clerk

Executed in 10 counterparts of
which this is counterpart No. 10

AGREEMENT FOR SEWAGE DISPOSAL

THIS AGREEMENT made and executed this 5TH day of MAY, 1961, between the CITY OF KIRKLAND, a municipal corporation of the State of Washington, hereinafter referred to as the "City" and the MUNICIPALITY OF METROPOLITAN SEATTLE, a municipal corporation of the State of Washington, hereinafter referred to as "Metro,"

W I T N E S S E T H:

WHEREAS, the public health, welfare and safety of the residents of the City and the residents of the metropolitan area require the elimination of existing sources of water pollution and the preservation of the fresh and salt water resources of the area; and

WHEREAS, growth of population, topographic conditions and preservation of water resources require that certain major sewage disposal works be constructed and operated and that the cities and special districts within the metropolitan area dispose of their sewage in accordance with a comprehensive plan for the metropolitan area; and

WHEREAS, Metro was established by vote of the people in the metropolitan area pursuant to Chapter 35.58 RCW for the purpose of performing the function of metropolitan sewage disposal, has adopted a comprehensive plan for the disposal of sewage from the metropolitan area and intends to develop the facilities needed to carry out such plan and to issue revenue bonds to finance such development; and

WHEREAS, to carry out the purposes of Metro and perform its authorized function and to provide for the disposal of sewage from the City into the metropolitan sewage disposal system it is necessary that a contract be now entered into establishing certain rights and duties of the parties incident thereto;

NOW, THEREFORE, in consideration of the mutual covenants contained herein, IT IS HEREBY AGREED as follows:

Section 1. Definition of Terms. The following words and phrases used in this contract shall have the meanings hereinafter set forth in this section:

(a) The words "Comprehensive Plan" shall mean the Comprehensive Sewage Disposal Plan for the metropolitan area adopted in Resolution No. 23 of the Municipality of Metropolitan Seattle and as same may be hereafter amended from time to time in the manner required by law.

(b) The words "Metropolitan Sewerage System" shall mean all of the facilities to be constructed, acquired or used by Metro as a part of the Comprehensive Plan. The Metropolitan Sewerage System shall generally include sewage disposal facilities with capacity to receive sewage from natural drainage areas of approximately one thousand acres or more. The Metropolitan Sewerage System shall thus include trunk or interceptor sewer facilities extending to a point within each tributary, and natural drainage area, where not more than one thousand acres remain to be served beyond the upper terminus of such trunk or interceptor sewer.

(c) The words "Local Sewerage Facilities" shall mean all facilities owned or operated by the Participant for the local collection of sewage to be delivered to the Metropolitan Sewerage System.

(d) The words "Metropolitan Area" shall mean the area contained within the boundaries of the Municipality of Metropolitan Seattle as now or hereafter constituted.

(e) The word "Participant" shall mean each city, town, county, sewer district, municipal corporation, person, firm or private corporation which shall dispose of any portion of its sanitary sewage into the Metropolitan Sewerage System and shall have entered into a contract with Metro providing for such disposal.

(f) The words "Residential Customer" shall mean a single family residence billed by a Participant for sewerage charges.

Section 2. Delivery and Acceptance of Sewage. From and after July 1, 1962, the City shall deliver to the Metropolitan Sewerage System all of the sewage and industrial wastes collected by it and Metro shall accept the sewage and wastes delivered for treatment subject to such reasonable rules and regulations as may be adopted from time to time by the Metropolitan Council. Metro shall not directly accept sewage or wastes from any person, firm, corporation or governmental agency which is located within the boundaries of or is delivering its sewage into the Local Sewerage Facilities of any Participant without the written consent of such Participant.

Section 3. Construction of Facilities. Metro shall construct, acquire or otherwise secure the right to use all facilities required for the disposal of sewage delivered to Metro pursuant to this Agreement and shall perform all services required for the maintenance, operation, repair, replacement or improvement

of the Metropolitan Sewerage System, including any additions and betterments thereto.

Section 4. Connection of Local Sewerage Facilities to the Metropolitan Sewerage System. Local Sewerage Facilities of the City shall be connected to the Metropolitan Sewerage System at such time as any portion of the Metropolitan Sewerage System shall be available to receive sewage collected by such facilities. Metro shall, at its sole expense, connect those Local Sewerage Facilities of the City which are now in existence or which shall be constructed in accordance with the rules and regulations of Metro prior to the availability of the Metropolitan Sewerage System. Local Sewerage Facilities constructed after the Metropolitan Sewerage System shall have been made available to the area served by such Local Sewerage Facilities shall be connected to the Metropolitan Sewerage System at the expense of the Participant in accordance with the rules and regulations of Metro.

Section 5. Payment for Sewage Disposal. For the disposal of sewage collected by the City and delivered to Metro, the City shall pay to Metro on or before the last day of each month during the term of this agreement, commencing with the month of July, 1962, a sewage disposal charge determined as provided in this Section 5.

1. For the quarterly periods ending March 31, June 30, September 30 and December 31 of each year every Participant shall submit a written report to Metro setting forth (a) the number of Residential Customers billed by such Participant for local sewerage charges as of the last day of the quarter, (b) the total number of all customers billed by such Participant as of such day and (c) the total water consumption during such

quarter for all customers billed by such Participant other than Residential Customers. The quarterly water consumption report shall be taken from water meter records and may be adjusted to exclude water which does not enter the sanitary facilities of a customer. Where actual sewage flow from an individual customer is metered, the metered sewage flows shall be reported in lieu of adjusted water consumption. The total quarterly water consumption report in cubic feet shall be divided by 2,700 to determine the number of Residential Customer equivalents represented by each Participant's customers other than single family residences. The first report shall cover the quarterly period ending December 31, 1960 and shall be submitted on or before March 1, 1961. Succeeding reports shall be made for each quarterly period thereafter and shall be submitted within thirty (30) days following the end of the quarter. Metro shall maintain a permanent record of the quarterly customer reports from each Participant.

2. To form a basis for determining the monthly sewage disposal charge to be paid by each Participant during any particular quarterly period Metro shall ascertain the number of Residential Customers and Residential Customer equivalents of each Participant for each such quarterly period beginning with the July-September quarter of the year 1962. This determination shall be made by taking the sum of the actual number of Residential Customers reported as of the last day of the next to the last preceding quarter and the average number of Residential Customer equivalents per quarter reported for the four quarters ending with said next to the last preceding quarter, adjusted to eliminate any Residential Customers or Residential Customer equivalents whose sewage is delivered to a governmental

agency other than Metro or other than a Participant for disposal outside of the Metropolitan Area.

3. For the period from July 1, 1962 to December 31, 1963, the monthly rate for each Residential Customer and Residential Customer equivalent of the City shall be Two dollars ($2.00) and the monthly sewage disposal charge to be paid by each Participant to Metro shall be obtained by multiplying the number of Residential Customers and Residential Customer equivalents of the Participant as determined in subparagraph 2 of this section by the monthly rate of Two dollars.

4. For each calendar year after the year 1963, the monthly sewage disposal charge payable to Metro shall be determined as follows:

a) Prior to July 1st of each year Metro shall determine its total monetary requirements for the disposal of sewage during the next succeeding calendar year. Such requirements shall include the cost of administration, operation, maintenance, repair and replacement of the Metropolitan Sewerage System, establishment and maintenance of necessary working capital and reserves, the requirements of any resolution providing for the issuance of revenue bonds of Metro to finance the acquisition, construction or use of sewerage facilities, plus not to exceed 1% of the foregoing requirements for general administrative overhead costs.

b) To determine the monthly rate per Residential Customer or Residential Customer equivalent to be used during said next succeeding calendar year, the total monetary requirements for disposal of sewage as determined in subparagraph 4(a) of this section shall be divided by twelve and the resulting quotient shall be divided by the

total number of Residential Customers and Residential Customer equivalents of all Participants ascertained in accordance with subparagraph 2 of this section for the October-December quarter preceding said July 1st; provided, however, that the monthly rate shall not be less than Two dollars ($2.00) per month per Residential Customer or Residential Customer equivalent at any time during the period ending July 31, 1972.

c) The monthly sewage disposal charge paid by each Participant to Metro shall be obtained by multiplying the monthly rate by the number of Residential Customers and Residential Customer equivalents of the Participant determined as provided in Paragraph 2 of this section. An additional charge may be made for sewage or wastes of unusual quality or composition requiring special treatment, or Metro may require pretreatment of such sewage or wastes. An additional charge may be made for quantities of storm or ground waters entering those Local Sewerage Facilities which are constructed after January 1, 1961 in excess of the minimum standard established by the general rules and regulations of Metro.

5. A statement of the amount of the monthly sewage disposal charge shall be submitted by Metro to each Participant on or before the first day of each month during the term of this agreement commencing with the month of July 1962 and payment of such charge shall be due on the last day of such month. If any charge or portion thereof due to Metro shall remain unpaid for fifteen days following its due date, the Participant shall be charged with and pay to Metro interest on the amount unpaid from its due date until paid at the rate of 6% per annum, and Metro may, upon failure to pay such amount, enforce payment by any remedy available at law or equity.

6. The City irrevocably obligates and binds itself to pay its sewage disposal charge out of the gross revenues of the combined water and sewerage system of the City. The City further binds itself to establish, maintain and collect rates and charges for water and for sewage disposal service sufficient to pay all costs of maintenance and operation of the combined water and sewerage system of the City, including the sewage disposal charge payable to Metro hereunder, and sufficient to pay the principal of and interest on any revenue bonds of the City which shall constitute a charge upon such gross revenue. It is recognized by Metro and the City that the sewage disposal charge paid by the City to Metro shall constitute an expense of maintenance and operation of the combined water and sewerage system of the City prior in lien to any water and sewer revenue bonds of the City to be hereafter issued. It is further recognized that the City shall have the right to fix its own schedule of water and sewerage rates and charges, provided that same shall produce revenue to meet the covenants contained in this agreement.

Section 6. Responsibility of Participant. Each Participant shall be responsible for the delivery to the Metropolitan Sewerage System of sewage collected by such Participant, for the construction, maintenance and operation of Local Sewerage Facilities, and for the payment of all costs incident to the collection of such sewage and its delivery to the Metropolitan Sewerage System.

Section 7. Records. Permanent books and records shall be kept by Metro of the rates established, the volumes of sewage delivered and discharged into the Metropolitan Sewerage System wherever such volumes are measured and the number of Residential Customers and Residential Customer equivalents reported by each Participant, in addition to complete books of account showing all costs incurred in connection with the Metropolitan Sewerage

System. Such records shall be maintained beginning with the commencement of operation of any part of the Metropolitan Sewerage System.

Section 8. Development of Metropolitan Sewerage System. It is contemplated that the Metropolitan Sewerage System will be developed in stages and the nature of facilities to be constructed, acquired or used and the time of such construction, acquisition or use shall be determined by Metro, it being contemplated that Metro shall ultimately provide sewage disposal service for the entire Metropolitan Area.

Section 9. Use of Facilities Owned or Operated by the City. Effective July 1, 1962, or such earlier date as may be mutually agreed upon (hereinafter called "takeover date"), Metro shall have the exclusive right to use and the duty to maintain, operate, repair and replace the facilities owned by the City which are described in Exhibit "A" attached hereto and by this reference made a part hereof, subject to the continued availability of such facilities to receive, transport or treat sewage delivered by the City. From and after the takeover date Metro shall acquire, construct, maintain, operate, repair and replace all facilities now or hereafter required for the treatment and disposal of sewage delivered by the City and the City shall make payment for such treatment and disposal as provided in Section 5 of this Agreement.

For the privilege of using the facilities described in Exhibit "A" and for the easement rights hereby granted to Metro by the City of Kirkland as described in Exhibit "B" attached hereto and by this reference made a part hereof, Metro shall pay to the City of Kirkland a total amount of One Hundred Twenty One Thousand Nine Hundred Dollars ($121,900.00) (hereinafter called "amount of reimbursement"). If the City shall construct improvements or additions to the

facilities described in Exhibit "A" with the approval of Metro after the date of this Agreement and prior to the takeover date, the City shall be reimbursed for the actual cost thereof in cash within thirty (30) days following the said takeover date in addition to the amount of reimbursement set forth above. The right of Metro to use facilities designated as "temporary" shall expire six months following the date of completion as determined by Metro of permanent metropolitan facilities adequate to replace such temporary' facilities. The City shall continue to own the facilities described in this Section 9 and shall continue to pay the principal of and interest on any bonds issued to pay in whole or in part the cost of acquisition and construction of such facilities, provided that facilities which are designated as "permanent" shall be conveyed by the City to Metro by quit claim deed upon payment of all presently outstanding revenue bonds or general obligation bonds of the City secured by or issued to acquire or construct said facilities.

The City shall give written notice to Metro prior to June 1, 1961, setting forth the manner in which the amount of reimbursement shall be paid. The City may elect to receive all or any portion of said amount in cash within thirty (30) days following the date of delivery of revenue bonds issued by Metro for the purpose of providing funds therefor and, in any event, not later than July 1, 1962 (hereinafter called "cash payment date") and may elect to receive any portion which is not paid on said cash payment date together with interest thereon at the rate of 4% per annum from said date, in the form of a credit against the City's monthly sewage disposal charge in equal monthly amounts sufficient to amortize such unpaid amount of reimbursement and interest thereon prior

to July 1, 1977. The City may at any time after the cash payment date elect to receive any unpaid portion of the amount of reimbursement in cash with interest at the rate of 4% per annum to date of final payment by giving written notice to Metro at least one year prior to the date such final payment is to be made.

Section 10. Insurance and Liability for Damages. Each Participant with a population of less than 100,000 shall secure and maintain with responsible insurers all such insurance as is customarily maintained with respect to sewerage systems of like character against loss of or damage to the respective sewerage facilities of each and against public and other liability to the extent that such insurance can be secured and maintained at reasonable cost. Any liability incurred by Metro as a result of the operation of the Metropolitan Sewerage System shall be the sole liability of Metro and any liability incurred by the City as a result of the operation of the Local Sewerage Facilities of the City shall be the sole liability of the City.

Section 11. Assignment. Neither of the parties hereto shall have the right to assign this Agreement or any of its rights and obligations hereunder nor to terminate its obligations hereunder by dissolution or otherwise without first securing the written consent of the other party and this Agreement shall be binding upon and inure to the benefit of the respective successors and assigns of the parties hereto. In the event that the City should be dissolved, the local sewer facilities owned and operated by the City shall by such act of dissolution be assigned and transferred to Metro subject to any outstanding debts of the City incurred for the construction

or acquisition of such facilities and subject to the obligation of Metro to continue to provide sewer service to the residents served by such local facilities upon payment of the reasonable costs thereof.

Section 12. Effective Date and Term of Contract. This Agreement shall be in full force and effect and binding upon the parties hereto upon the execution of the Agreement and shall continue in full force and effect for a period of fifty years unless prior to the takeover date Metro shall not have entered into a firm commitment for the sale of revenue bonds to finance any portion of the Comprehensive Plan, then in such event only, this Agreement shall be terminated as of said date. Metro shall make every reasonable effort to secure such a commitment prior to said date.

Section 13. Notice. Whenever in this Agreement notice is required to be given, the same shall be given by Registered Mail addressed to the respective parties at the following addresses:

Municipality of Metropolitan Seattle
152 Denny Way, Seattle 9, Washington

City of Kirkland
Kirkland, Washington

unless a different address shall be hereafter designated in

writing by either of the parties.

The date of giving such notice shall be deemed to be the date of mailing thereof. Billings for and payments of sewage disposal costs may be made by regular mail.

Section 14. Execution of Documents. This Agreement shall be executed in ten counterparts, any of which shall be regarded for all purposes as one original. Each party agrees that it will execute any and all deeds, instruments, documents and resolutions or ordinances necessary to give effect to the terms of this Agreement.

Section 15. Waiver. No waiver by either party of any term or condition of this Agreement shall be deemed or construed as a waiver of any other term or condition, nor shall a waiver of any breach be deemed to constitute a waiver of any subsequent breach whether of the same or a different provision of this Agreement.

Section 16. Remedies. In addition to the remedies provided by law, this Agreement shall be specifically enforceable by either party.

Section 17. Entirety. This Agreement merges and supersedes all prior negotiations, representations and agreements between the parties hereto relating to the subject matter hereof and constitutes the entire contract between the parties concerning the disposal of sewage by the City and acceptance of such sewage by Metro for disposal.

IN WITNESS WHEREOF, the parties hereto have executed

this Agreement as of the day and year first above written.

CITY OF KIRKLAND

By _____
Byron Baggaley
Mayor

ATTEST:

_____
George A. Compton
City Clerk

MUNICIPALITY OF METROPOLITAN SEATTLE

By _____
C. Carey Donworth
Chairman of the Council

ATTEST:

_____
Maralyn Sullivan
Clerk of the Council

STATE OF WASHINGTON)
) ss.
COUNTY OF KING)

On this 5th day of May, 1961, before me personally appeared BYRON BAGGALEY and GEORGE A. COMPTON, to me known to be the Mayor and City Clerk, respectively, of the City of Kirkland, a municipal corporation, and acknowledged the within and foregoing instrument to be the free and voluntary act and deed of said corporation, for the uses and purposes therein mentioned, and on oath stated that they were authorized to execute said instrument and that the seal affixed is the corporate seal of said corporation.

IN WITNESS WHEREOF, I have hereunto set my hand and affixed my official seal the day and year first above written.

Ralph I. R[illegible]
Notary Public in and for the State of Washington, residing at Kirkland

STATE OF WASHINGTON)
) ss.
COUNTY OF KING)

On this 27 day of April, 1961, before me personally appeared C. CAREY DONWORTH and MARALYN SULLIVAN, to me known to be the Chairman of the Council and Clerk of the Council, respectively, of the Municipality of Metropolitan Seattle, a municipal corporation, and acknowledged the within and foregoing instrument to be the free and voluntary act and deed of said corporation, for the uses and purposes therein mentioned, and on oath stated that they were authorized to execute said instrument and that the seal affixed is the corporate seal of said corporation.

IN WITNESS WHEREOF, I have hereunto set my hand and affixed my official seal the day and year first above written.

Arthur S. Shoney
Notary Public in and for the State of Washington, residing at Seattle

EXHIBIT "A"

TEMPORARY FACILITIES

FACILITY

Sewage treatment plant and associated improvements located on the following described property situated in King County, State of Washington, to wit:

Beginning at the meander corner between Sections 5 and 8, Township 25 North, Range 5 E.W.M., and running thence along section line north 89° 39' 00" east 60.15 feet; thence north 22° 21' 00" west 183.71 feet; thence north 70° 04' 15" east, 496.71 feet to the true point of beginning; thence continuing north 70° 04' 15" east, a distance of 319.13 feet; thence north 0° 21' 00" east a distance of 198.76 feet, thence south 70° 04' 15" west a distance of 319.13 feet; thence south 0" 21' 00" west, a distance of 198.76 feet to the true point of beginning.

EXHIBIT "B"

Description of Permanent Sewage Pumping Station Easement

A perpetual easement for the purpose of installing, constructing, maintaining, operating, repairing and replacing an underground sewage pumping station with all connecting sewer lines, manholes, underground power, telephone, water or other utility lines or pipelines and appurtenances thereto, together with the right of ingress and egress to said station and the right to maintain an access stairway over, upon and under the westerly 10 feet of the easement property, said easement property being located in the City of Kirkland, King County, State of Washington, and more particularly described as follows:

> Th prt of govt lot 5 sect 5 twp 25 N R 5 E W.M. daf Beg at the meander cor betw sects 5 and 8 twp 25 N R 5 E W.M.; th N 89°39'00" E alng the Sly In of sd govt lot 5 a distance of 459.32 ft to the Sly production of the Ely ln of 2nd St; th N 0°21'00" W 273.13 ft to the SEly ln of 1st Ave as cyed to the City of Kirk and by dd recdd under aud file No. 3883807 rec of sd co; th N 70°04'15" E alng sd SEly ln 95.52 ft; th N 89°39'00"E 210.99 ft to the W ln 3rd St as cyed to the City of Kirk in said deed; th N 0°21'00" W 60 ft along th W ln of said 3rd St to the true point of beginning; th S 89°21'00"W 10 ft; th N 0°21'00" W 60 ft;th N 89°39'00"E 10 ft to the W ln of said 3rd St; th N 89°39'00"E 60 ft; th S 0°21'00"E 60 ft; th S 89°31'00"W 60 ft to T.P.O.B.

reserving, however, to the city all right, title and interest which may be used and enjoyed without interfering with the easement rights herein conveyed and, in particular, to continue to use and maintain as a city street the surface of that portion of said property now used for a street following construction or repair of the pumping station thereunder and the restoration by Metro of any street improvements damaged by such construction or repair.

INTERGOVERNMENTAL COOPERATION AGREEMENT BETWEEN THE CITY OF BELLEVUE AND THE CITY OF KIRKLAND

FOR

PROVIDING SANITARY SEWER SERVICE TO SOUTH KIRKLAND PARK AND RIDE GARAGE

This Intergovernmental Cooperation Agreement ("Agreement") effective this 6th day of Sept., 2012, is entered into between the CITY OF BELLEVUE, a Washington municipal corporation ("Bellevue") and the CITY OF KIRKLAND, a Washington municipal corporation ("Kirkland"), regarding the provision of sanitary sewer services to the South Kirkland Park and Ride project.

RECITALS

WHEREAS, Bellevue is a non-charter optional municipal code city incorporated under the laws of the State of Washington, with authority to enact laws and enter into agreements to promote the health, safety, and welfare of its citizens and for other lawful purposes; and

WHEREAS, Kirkland is a non-charter optional municipal code city incorporated under the laws of the State of Washington, with authority to enact laws and enter into agreements to promote the health, safety, and welfare of its citizens and for other lawful purposes; and

WHEREAS, King County Metro Transit ("KCMT") owns a parcel of land measuring approximately 3.8 acres at the NE corner of 108th Avenue and NE 38th Place (the "Property"), which parcel is split by the jurisdictional boundary between Bellevue and Kirkland; and

WHEREAS, KCMT has operated the South Kirkland Park and Ride ("SKPR") on the Property since 1978; and

WHEREAS, KCMT has applied to construct improvements on the SKPR facility, including construction of multifamily housing, affordable housing, a 3.25 story parking garage and related improvements; and

WHEREAS, the proposed multifamily and affordable housing will be on the west side of the Property on the Kirkland Portion of the Property; and

WHEREAS, the proposed parking garage will be located on the southeast corner of the Property and oriented in an east-west direction along 108th Avenue NE on the Bellevue portion of the Property. The east and south boundaries of the SKPR within Bellevue's jurisdiction contain ascending steep slopes (over 40 percent slopes), which are deemed critical areas under Bellevue's Land Use Code, Part 20.25H; and

WHEREAS, Bellevue's Utilities Department provides sanitary sewer services to residents and ratepayers within the City of Bellevue corporate limits and Kirkland's Public Works Department provides sanitary sewer service to residents and ratepayers within the City of Kirkland corporate limits; and

WHEREAS, the nearest sanitary sewer to the SKPR in Bellevue is a Metro trunk line located above the steep slope critical area to the east of the SKPR. Providing sanitary sewer to the proposed parking garage would require constructing a line to connect the proposed parking garage to the Metro trunk line. This construction would require disturbing the steep slope critical area, and the corresponding elevation of the new sanitary sewer line would require installation of pumping facilities to pump effluent uphill to the Metro trunk line; and

WHEREAS, Kirkland provides sanitary sewer to the SKPR and has connections available on **NE 38th Street** that could provide sanitary sewer service to that portion of the proposed parking garage located within Bellevue's jurisdiction; and

WHEREAS, based on the potential construction impacts to the steep slope critical area and the requirement to pump effluent to address grade change challenges, it is economically and technologically inefficient for Bellevue to provide sanitary sewer service to the proposed parking garage; and

WHEREAS, the City of Bellevue and the City of Kirkland both strive to provide the most efficient means of providing sanitary sewer service to their residents and ratepayers; and

WHEREAS, in support of the multi-jurisdictional cooperative efforts for this Essential Public Facility the parties agree that Kirkland would be best able to provide sanitary sewer service for the proposed parking garage to be constructed on the property; and

WHEREAS, the Kirkland and Bellevue are authorized to enter into this Agreement pursuant to and in accordance with the State Interlocal Cooperation Act, Chapter 39.34 RCW.

NOW, THEREFORE, in consideration of mutual promises and covenants contained herein, the parties agree to the terms and conditions as follows:

1.0 Provision of Sanitary Sewer Service

1.1. Bellevue authorizes Kirkland to provide sanitary sewer service for that portion of the SKPR located within Bellevue's jurisdiction. See Attachment A to this Agreement.

1.2. Kirkland agrees to do all things necessary and/or appropriate to provide sanitary sewer services for that portion of the SKPR property that exists within Bellevue's jurisdiction.

1.3. As the designated provider of sanitary sewer services, Kirkland shall process all permits and approvals required for sanitary sewer service connection and/or operation required for redevelopment of the SKPR.

2.0 Indemnification

2.1. Kirkland shall indemnify, defend and hold harmless Bellevue, its employees, servants, and agents from any and all claims, demands, suits, actions, damages, recoveries, judgments, costs, or expenses (including without limitation, attorneys' and expert witness fees) arising or growing out of or in connection with or related to, either directly or indirectly the provision of sanitary sewer service to the SKPR, except to the extent such claims arise from the sole or partial negligence, error or omissions of Bellevue, its employees, servants, and agents. Kirkland agrees that this its obligations under this subparagraph extend to any claim, demand and/or cause of action brought by or, or on behalf of, any of its employees or agents. For this purpose, Kirkland, by mutual negotiation, hereby waives, as respects Bellevue, any immunity that would otherwise be available against such claims under the Industrial Insurance provisions of Title 51 RCW. In the event Bellevue incurs any judgment, award, and/or cost arising therefrom including attorneys' fees to enforce the provisions of this article, all such fees, expenses, and costs shall be recoverable from Kirkland.

2.2 Bellevue shall indemnify, defend and hold harmless Kirkland, its employees, servants, and agents from any and all claims, demands, suits, actions, damages, recoveries, judgments, costs, or expenses (including without limitation, attorneys' and expert witness fees) arising or growing out of or in connection with or related to, either directly or indirectly the provision of sanitary sewer service to the SKPR, except to the extent such claims arise from the sole or partial negligence, error or omissions of Kirkland, its employees, servants, and agents. Bellevue agrees that this its obligations under this subparagraph extend to any claim, demand and/or cause of action brought by or, or on behalf of, any of its employees or agents. For this purpose, Bellevue, by mutual negotiation, hereby waives, as respects Kirkland, any immunity that would otherwise be available against such claims under the Industrial Insurance provisions of Title 51 RCW. In the event Kirkland incurs any judgment, award, and/or cost arising therefrom including attorneys' fees to enforce the provisions of this article, all such fees, expenses, and costs shall be recoverable from Bellevue.

3.0 General Provisions

3.1 This Agreement shall be interpreted, construed, and enforced in accordance with the laws of the State of Washington. Venue for any action under this Agreement shall be King County, Washington.

3.2 This Agreement shall be binding upon and inure to the benefit of the successors and assigns of Bellevue and Kirkland.

3.3 This Agreement is made and entered into for the sole protection and benefit of the parties hereto and their successors and assigns. No other person shall have any right of action based upon any provision of this Agreement.

3.4 This Agreement has been reviewed and revised by legal counsel for all parties and no presumption or rule that ambiguity shall be construed against the party drafting the document shall apply to the interpretation or enforcement of this Agreement. These parties intend this Agreement to be interpreted to the full extent authorized by applicable law.

3.5 This Agreement, including its exhibits, may be amended only by a written instrument executed by each of the parties hereto.

3.6 This Agreement constitutes the entire agreement of the parties with respect to the subject matter of this Agreement, and supersedes any and all prior negotiations (oral and written), understandings and agreements with respect hereto.

3.7 This Agreement may be executed in several counterparts, each of which shall be deemed an original, and all counterparts together shall constitutes by tone and the same instrument.

3.8 This Agreement shall take effect upon execution of the Agreement after authorization by Bellevue's City Council and Kirkland's City Council. This Agreement shall remain in effect until terminated by either party by 180 days prior written notice to the other party.

3.9 A copy of this Agreement shall be filed with the Bellevue and Kirkland City Clerks and the County Auditor.

4. Notices. All notices required under this Agreement shall be deemed sufficient if sent in writing by U.S. Mail or by electronic mail. All notices shall be delivered to the following addresses or to any other or additional addresses as may be specified from time to time by notice to either party. Notices shall be deemed received on the day sent electronically or 3 business days after the notice is placed in the U.S. Mail

Bellevue:	Utilities Director City of Bellevue P.O. Box 90012 Bellevue, WA 98009-9012
With a copy to:	City Attorney City of Bellevue P.O. Box 90012 Bellevue, WA 98009-9012

Kirkland: Public Works Director
City of Kirkland
123 5th Avenue
Kirkland, WA 98033

With a copy to: City Attorney
City of Kirkland
123 5th Avenue
Kirkland, WA 98033

IN WITNESS WHEREOF, each of the parties has executed this Agreement by having its authorized representative affix his/her name in the appropriate space below:

CITY OF BELLEVUE

By: [signature]

Title: City Manager – Deputy

Date: 8-9-12

CITY OF KIRKLAND

By: [signature]

Title: City Manager

Date: 9/7/12

Approved as to form:

[signature]

Approved as to form:

[signature]

METRO PARK AND RIDE
SHORT PLAT
CITY OF KIRKLAND

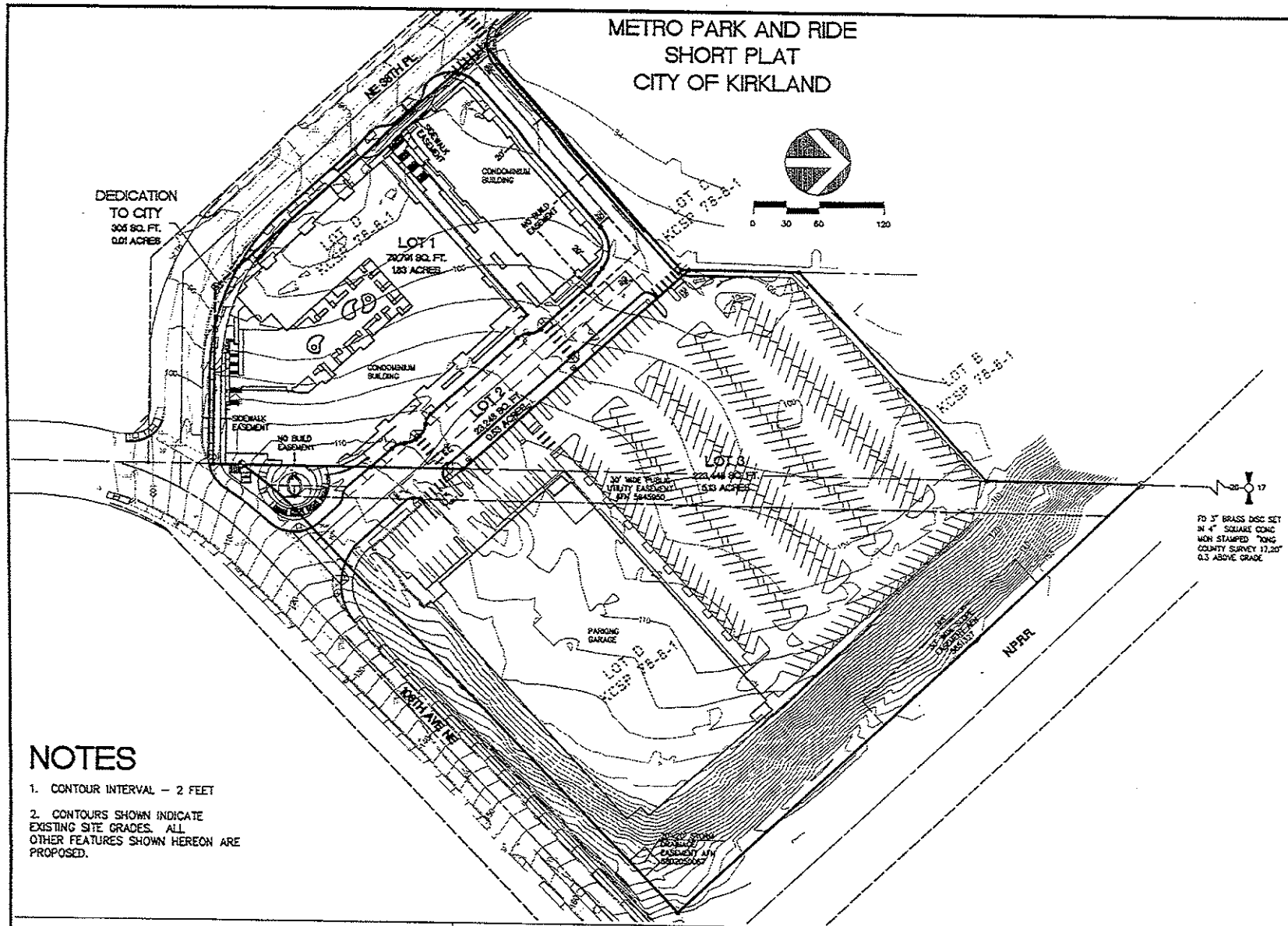

ATTACHMENT A SITE PLAN
SOUTH KIRKLAND PARK AND RIDE

NOTES

1. CONTOUR INTERVAL – 2 FEET
2. CONTOURS SHOWN INDICATE EXISTING SITE GRADES. ALL OTHER FEATURES SHOWN HEREON ARE PROPOSED.

SURVEYOR'S CERTIFICATE

THIS MAP CORRECTLY REPRESENTS A SURVEY, MADE BY ME OR UNDER MY DIRECTION, IN CONFORMANCE WITH THE REQUIREMENTS OF THE SURVEY RECORDING ACT AT THE REQUEST OF _____ ON _____, 20__.

SURVEYOR

CERTIFICATE NO. _____

DOUGLAS F. VOGT
STATE OF WASHINGTON
38017
REGISTERED
PROFESSIONAL LAND SURVEYOR

CITY OF KIRKLAND WASHINGTON

DAVID EVANS AND ASSOCIATES INC.
415 - 118th Avenue SE
Bellevue Washington 98005-3518
Phone: 425.519.6500

PORTION OF:
N 1/2, SEC. 20
T. 25 N, R.5 E, W.M.

DWN. BY	DATE	JOB NO.
AALA	04-16-12	KIRK0000 -0001
CHKD. BY	SCALE	SHEET
DEV	1" = 60'	3 OF 3

RECEIVED
MAY 25 1989
PUBLIC WORKS/UTILITIES

CITY OF KIRKLAND
123 FIFTH AVENUE KIRKLAND, WASHINGTON 98033-6189 (206) 828-1243

DEPARTMENT OF PUBLIC WORKS
MEMORANDUM OF UNDERSTANDING

To: Daryl Bunger, City of Bellevue

From: Fred French, City of Kirkland

Date: May 24, 1989

Subject: SANITARY SEWER MAIN IN POINTS DRIVE

It will be the understanding between the cities of Kirkland and Bellevue that the City of Kirkland will own, operate, and maintain the sanitary sewer main within the Points Drive right-of-way from the first manhole north of SR 520 and to the north. The City of Bellevue will continue to own, operate, and maintain the lines under and south of SR 520 to the first manhole on the north side. The cities will consider the lines to be within respective jurisdictions for the purposes of issuing permission to access and connect, including street cuts.

This understanding will not extend to any other land use issues and is only intended to simplify the operation of each utility by using the SR 520 right-of-way as an effective utility district boundary.

Fred French, Principal Engineer, Kirkland

Daryl Bunger 6-8-89
Daryl Bunger, Development Operations Manager, Bellevue

BUNGER.MAY/FF:cw

RESOLUTION R 3118

A RESOLUTION OF THE CITY COUNCIL OF THE CITY OF KIRKLAND AUTHORIZING AND DIRECTING THE CITY MANAGER TO SIGN ON BEHALF OF THE CITY OF KIRKLAND, THAT CERTAIN INTERLOCAL GOVERNMENTAL AGREEMENT WITH THE CITY OF BELLEVUE, FOR THE PROVISION OF SANITARY SEWER SERVICE WITHIN THAT AREA OF KIRKLAND LYING WEST OF AND ADJACENT TO BRIDLE TRAILS STATE PARK.

Whereas, both Kirkland and Bellevue are authorized by state law to enter into cooperative agreements; and

Whereas, that area of the City of Kirkland within its sanitary sewer system service area, adjacent to Bridle Trails State Park as more specificallly described in Exhibit A hereto, and by this reference incorporated herein, is not presently connected to the Kirkland sanitary sewer system, and because of the topography of the area may not readily be so connected; and

Whereas, the service area and corporate boundaries of the City of Bellevue and its sanitary sewer system lie adjacent to the subject area, and the subject area can conveniently be connected into a Bellevue sewer system facility existing or under construction; and

Whereas, both parties are desirous where possible and convenient to mutually assist one another, now, therefore,

Be it resolved by the City Council of the City of Kirkland as follows:

Section 1. The proposed interlocal governmental cooperative agreement between the City of Kirkland and the City of Bellevue, for the provision of sanitary sewer service to that area of Kirkland lying west of and adjacent to Bridle Trails State Park, as set forth in Exhibit A, attached to the original of this resolution and by this reference incorporated herein, is approved by the City Council. The City Manager for the City of Kirkland is authorized to sign said agreement on behalf of the City of Kirkland.

Passed by majority vote of the Kirkland City Council in regular, open meeting this 17th day of September, 1984.

FILED NO. 9747
CITY OF BELLEVUE
DATE 10-2-84
CITY CLERK O'Connell
Res. 4438

AGREEMENT

This agreement made and entered into this day by and between the City of Kirkland, an optional code city, hereinafter referred to as "Kirkland" and the City of Bellevue, an optional code city, hereinafter referred to as "Bellevue",

WITNESSETH:

WHEREAS, both Kirkland and Bellevue are authorized by State law to enter into cooperative agreements; and

WHEREAS, the area described and designated on Exhibit "A" (attached hereto and by this reference incorporated herein) as subject are of the City of Kirkland sanitary sewer system; and

WHEREAS, said area is not presently connected to the Kirkland sanitary sewer system, and because of the topography of the area, may not readily be so connected; and

WHEREAS, the service area and corporate boundaries of the City of Bellevue and its sanitary sewer system lie adjacent to the subject area and the subject area can conveniently be connected into a Bellevue sewer system facility existing or under construction; and

WHEREAS, both parties are desirous where possible and convenient to mutually assist one another.

NOW, THEREFORE, in consideration of the agreements herein contained, it is agreed as follows:

Section 1. All sanitary sewer facilities to be constructed within the subject area described and designated on Exhibit "A", as attached hereto and by this reference incorporated herein, shall upon

construction and acceptance, become for all purposes, including customer service charges and maintenance, part of the Kirkland sanitary sewer system, but may, nevertheless, be connected into the Bellevue sewer system sanitary facility line lying within twenty feet and at the point so designated as "connection point" on Exhibit "A".

Section 2. Bellevue agrees to accept all sewage entering into its system through said connection point and to convey same through its system to its connection with the Municipality of Metropolitan Seattle System.

Section 3. No part of the cost of construction of the sanitary sewer facilities to be constructed within subject area, nor any of its future maintenance or repair, shall be borne by the City of Bellevue.

Section 4. City of Kirkland agrees to pay over to City of Bellevue as to each property within subject area, as it makes sewer connection, an amount equal to $0.02 per square foot of area of each property. In addition thereto, Kirkland will pay to Bellevue a monthly service trunkage charge in an amount equal to 12¢ per month per residential customer or residential equivalent, actually connected and served by the facilities of the Kirkland sewer system within the subject area.

Section 5. Neither party shall by virtue of this agreement acquire any proprietory or governmental interest in the sewer system or sewer line of the other party. Each party shall be solely responsible for the operation and maintenance of its own system of sewage collection and shall save the other party harmless from any claim for damage, real or imaginary, made by a third party, and alleging negligence or misfeasance in the operation or maintenance of the other party's system, or in the acts or ommissions of its own officers or employees.

Section 6. This writing embodies the entire agreement of the parties. There are no promises, terms, conditions, or obligations other than those contained herein. This agreement may be amended only by written instrument signed by both parties.

Section 7. No waiver by either party of any term of condition of this agreement shall be deemed or construed as a waiver of any other term or condition, nor shall a waiver of any subsequent breach, whether of the same or of a different provision of this agreement.

Section 8. This agreement shall terminante upon six (6) months written notice given by either party to the other party. In the event of termination under this paragraph, all costs of disconnection shall be borne by the party requesting the termination.

- -

THIS AGREEMENT SIGNED this 19th day of September, 1984.

CITY OF KIRKLAND

By Tom J. Anderson

Tom J. Anderson, Acting City Manager

- -

THIS AGREEMENT SIGNED this 1st day of October, 1984.

CITY OF BELLEVUE

By

Execution of this agreement approved and authorized on behalf of:

the City of Bellevue by Resolution No. 4428, adopted this 1st day of October, 1984; and

the City of Kirkland by Resolution No. R3118, of the Kirkland City Council, adopted this 17th day of Sept., 1984.

Approved as to form:

City Attorney Kirkland

City Attorney Bellevue

4894J

EXHIBIT "A"

That portion of Section 17, Township 25, Range 5, E.W.M. lying easterly of SR 405 and,

the west half of the west half of Section 16, Township 25, Range 5, E.W.M., all in King County, Washington.

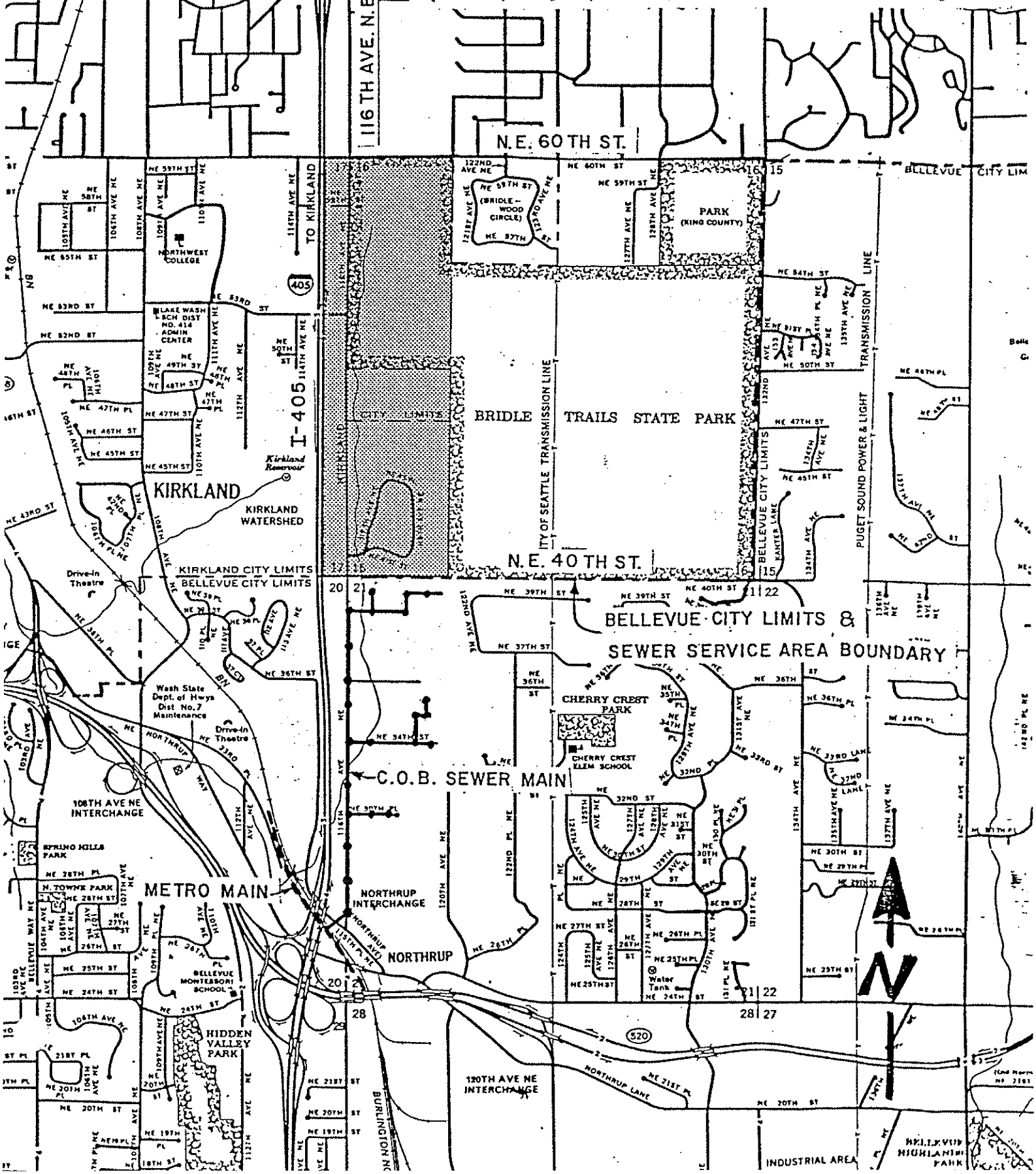

FILED NO. 6329
CITY OF BELLEVUE
DATE 7-28-80
CITY CLERK

AGREEMENT BETWEEN
THE CITY OF KIRKLAND, THE CITY OF BELLEVUE AND BELLEVUE INN, INC.

THIS AGREEMENT entered into this 28 day of July, 1980, is by and between THE CITY OF KIRKLAND, THE CITY OF BELLEVUE AND BELLEVUE INN, INC.

WHEREAS BELLEVUE INN, INC., the owner of the hereinafter described real property situated within the City of Kirkland, has requested sewer connection and service for said real property; and

WHEREAS the City of Kirkland sewer system presently does not have facilities available within the area in which said real property is located, and to which said real property could connect and be provided with sewer services; and

WHEREAS the City of Bellevue has a sewer system with existing facilities within the public rights-of-way adjacent to said real property and into which temporary connections could be made; and

WHEREAS all parties agreed that said real property may be temporarily connected to and serviced by the City of Bellevue sewer system until such time as the Kirkland sewer system has extended their facilities into the area and can provide sewer service to said real property;

NOW, THEREFORE, in consideration of the terms and agreements hereinafter set forth, the parties agree as follows:

1. The City of Kirkland and the City of Bellevue agree that the owner may connect the real property, hereinafter described, into and be served by the Bellevue sewer system in accordance with the requirements and payment of costs set forth in Exhibit A attached hereto and incorporated herein; and for so long as said real property is so connected to the Bellevue sewer system, the occupants of said property shall be treated as customers of the Bellevue sewer system for all purposes including the billing and collection of service charges. Provided, however, that this arrangement shall continue pursuant to this agreement only until such time as the facilities of the City of Kirkland sewer system may be extended into the general area in which the real property is situate, and at such time as a service connection for said real property shall be disconnected from the Bellevue sewer system.

2. The owner of the hereinafter described real property agrees and covenants with the City of Kirkland that said property shall be disconnected from the Bellevue sewer system facilities and reconnected to the City of Kirkland sewer system facilities at such time, after the Kirkland sewer system facilities have been extended into the area within which said real property is located, as notice to make such connections to the Kirkland sewer system is given by the City of Kirkland.

3. At the time that said real property shall connect into the Kirkland sewer system, there shall be paid to the City of Kirkland by Bellevue Inn, Inc., their successors or assigns, all connection charges, fees and assessments, as

would be required to be paid for connecting said real property at that time to the particular City of Kirkland utility system, not withstanding the existence of this agreement; provided, however, that the sum of said charges, fees and assessments shall be reduced by the amount, if any, paid by the owner to the City of Bellevue for the privilege of connecting to the said Bellevue sewer system at the time that the temporary connection is made pursuant to this agreement.

4. It is the intention of all of the parties hereto that the obligations imposed upon the hereinafter described real property, and agreed to and assumed by the owners thereof, shall run with the land; and a copy of this agreement shall be recorded as a public record in the office of the King County Department of records and elections.

4 54-50 81

CITY OF KIRKLAND

BY _____

CITY OF BELLEVUE

BY _____

BELLEVUE INN, INC.

_____ President

842- 106th NE.

Bellevue, Wash.

STATE OF WASHINGTON)
) ss
COUNTY OF KING)

On this 17th day of June, 1980, before, the undersigned, a Notary Public in and for the State of Washington, duly commissioned and sworn personally appeared KENNETH D. McMILLAN to me known to be the individual described in and who executed the foregoing and acknowledged to me that he signed the said AGREEMENT as his free and voluntary act and deed for the uses and purposes therein mentioned.

WITNESS my hand and official seal hereto affixed this day and year in this certificate above written.

NOTARY PUBLIC in and for the State of Washington, residing at ~~Redmond~~. Seattle

STATE OF WASHINGTON)
) SS
COUNTY OF KING)

On this 8th day of July, 19 80, before me, the undersigned, a Notary Public in and for the State of Washington, duly commissioned and sworn, personally appeared Allen B. Locke ~~and~~ _____, to me known to be the individual described in and who executed the foregoing instrument, and acknowledged to me that he signed and sealed this said instrument as his free and voluntary act and deed for the uses and purposes therein mentioned.

Given under my hand and official seal this 8th day of July, 19 80.

Sally J. Brier
Notary Public in and for the State of Washington, residing at Kirkland.

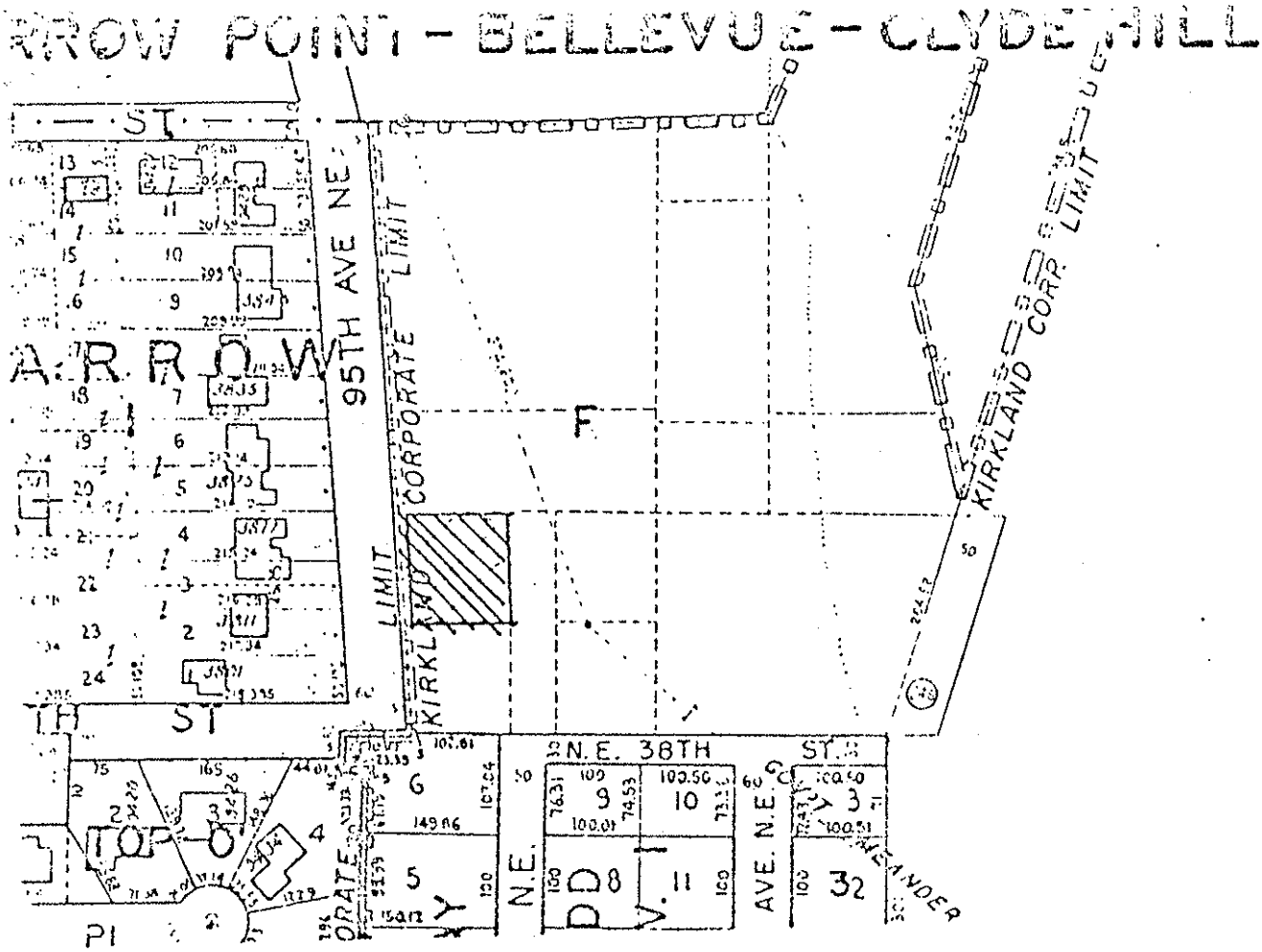

THAT PORTION OF TRACT "F" OF YARROW, ACCORDING TO THE PLAT RECORDED IN VOLUME 15 OF PLATS, PAGE 92, IN KING COUNTY, WASHINGTON, DESCRIBED AS FOLLOWS:

BEGINNING AT THE SOUTHWEST CORNER OF SAID TRACT "F"; THENCE EASTERLY ALONG THE SOUTHERLY LINE THEREOF 107.71 FEET; THENCE NORTH 1°29'18" EAST 130 FEET TO THE TRUE POINT OF BEGINNING OF THIS DESCRIPTION; THENCE CONTINUING NORTH 1°29'18" EAST 100 FEET; THENCE NORTH 88°30'42" WEST TO THE WEST LINE OF SAID TRACT "F"; THENCE SOUTHERLY ALONG SAID WEST LINE TO A POINT WHICH BEARS NORTH 88°30'42" WEST FROM THE TRUE POINT OF BEGINNING; THENCE SOUTH 88°30'42" EAST TO THE TRUE POINT OF BEGINNING; EXCEPT THE WESTERLY 5 FEET THEREOF.

TOGETHER WITH AN EASEMENT FOR DRIVEWAY AND UTILITIES OVER THE WESTERLY 5 FEET OF THE FOLLOWING:

THAT PORTION OF TRACT "F" OF YARROW, ACCORDING TO THE PLAT RECORDED IN VOLUME 15 OF PLATS, PAGE 92, IN KING COUNTY, WASHINGTON, DESCRIBED AS FOLLOWS:

BEGINNING AT THE SOUTHWEST CORNER OF SAID TRACT "F"; THENCE EASTERLY ALON THE SOUTHERLY LINE THEREOF 107.71 FEET; THENCE NORTH 1°29'18" EAST 130 FEET TO THE TRUE POINT OF BEGINNING OF THIS DESCRIPTION; THENCE CONTINUIN NORTH 1°29'18" EAST 100 FEET; THENCE NORTH 88°30'42" WEST TO THE WEST LIN OF SAID TRACT "F"; THENCE SOUTHERLY ALONG SAID WEST LINE TO A POINT WHICH BEARS NORTH 88°30'42" WEST FROM THE TRUE POINT OF BEGINNING; THENCE SOUTH 88°30'42" EAST TO THE TRUE POINT OF BEGINNING.

EXHIBIT "A"

Costs

Trunkage	1.6¢ per square foot of area served
Service Charge	12¢ per month per residential customer or residential equivalent

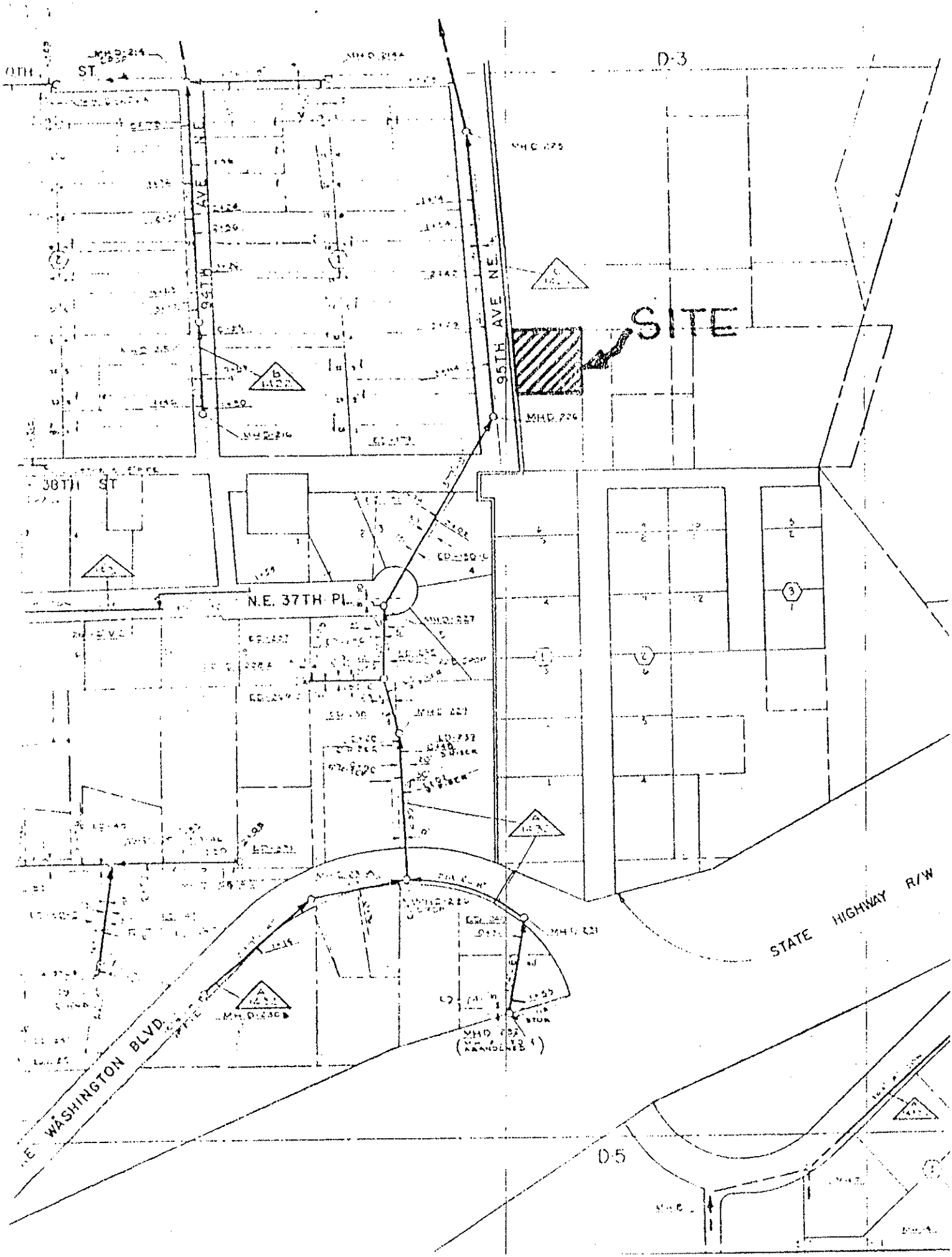
D-3
SITE
95TH AVE NE
93RD AVE NE
38TH ST
N.E. 37TH PL.
STATE HIGHWAY R/W
WASHINGTON BLVD.
D-5

WL

~~ORIGINAL~~

CITY OF BELLEVUE, WASHINGTON

RESOLUTION NO. 3610

A RESOLUTION authorizing execution of an agreement between the City of Kirkland and the City of Bellevue and Bellevue Inn, Inc. to provide sanitary sewer service to an area within the City of Kirkland.

THE CITY COUNCIL OF THE CITY OF BELLEVUE, WASHINGTON, DOES RESOLVE AS FOLLOWS:

Section 1. The City Manager or her designee is hereby authorized and directed to execute, on behalf of the City, that certain agreement between the City of Kirkland and the City of Bellevue and Bellevue Inn, Inc., to provide sanitary sewer service to an area within the City of Kirkland, which has been given Clerk's Receiving No. 6329.

PASSED by the City Council this 28 day of July, 1980, and signed in authentication of its passage this 28 day of July, 1980.

(SEAL)

Richard M. Foreman, Mayor

Attest:

Patricia K. Weber, City Clerk

AGENDA OF THE CITY COUNCIL
CITY OF BELLEVUE

AGENDA NO: SS 2 (b) MEETING DATE: 7/21/80

SUBJECT: Agreement with City of Kirkland to Provide Sewer Service

ISSUE: Is providing sewer service to properties within City of Kirkland that cannot at present be served by Kirkland in the public interest?

DEPARTMENT: Public Works/Utilities
STAFF CONTACT: Walter E. Davis, Jr.
TELEPHONE: 6965
OTHER DEPT. COORDINATION: Legal

AGENDA LOCATION:
- PUBLIC HEARING ____
- LAND USE REPORT ____
- BID ____
- CONSENT ____
- OTHER RESOLUTIONS AND ORDINANCES ____
- UNFINISHED BUS. ____
- NEW BUSINESS ____
- STUDY SESSION X
  - DISCUSSION ____
  - INFORMATION X

EXPENDITURE REQUIRED: $ Semi-annual billing
AMOUNT BUDGETED: $ -0-
APPROPRIATION REQUESTED: $ -0-
REVENUE SOURCE: -0-
FINANCIAL DEPARTMENT SIGNATURE: N/A
FISCAL IMPACT: N/A

ENFORCEMENT IMPACT: N/A

CLASS OF SUPPORTING DATA:
- ORDINANCE ____
- RESOLUTION X
- REPORT ____
- MINUTE ORDER ____

EXHIBITS:
A. Site map
B. Agreement
C.

HISTORICAL BACKGROUND: None

RECOMMENDATION: Pass resolution authorizing City Manager to execute Agreement with City of Kirkland.

SUMMARY: Sanitary sewer service to the property in this proposed agreement located along 95th Avenue N.E. at approximately N.E. 38th Street will be provided by an existing City of Bellevue line running north into Yarrow Point. We will collect a trunkage charge (one time) from the Developer (Bellevue Inn, Inc.) and monthly will collect from the residents a use fee.

WED/mb

COUNCIL: PLEASE RETAIN THIS MATERIAL FOR REVIEW AT MEETING OF 7/28/80

5/2/80

FILED NO. 6330
CITY OF BELLEVUE
DATE 7-28-80
CITY CLERK

ORIGINAL

AGREEMENT BETWEEN
THE CITY OF KIRKLAND, THE CITY OF BELLEVUE AND YARROW POINT PARTNERS

THIS AGREEMENT entered into this 28 day of July, 1980, is by and between THE CITY OF KIRKLAND, THE CITY OF BELLEVUE and YARROW POINT PARTNERS.

WHEREAS Yarrow Point Partners, the owner of the hereinafter described real property situated within the City of Kirkland, has requested sewer connection and service for said real property; and

WHEREAS the City of Kirkland sewer system presently does not have facilities available within the area in which said real property is located, and to which said real property could connect and be provided with sewer services; and

WHEREAS the City of Bellevue has a sewer system with existing facilities within the public rights-of-way adjacent to said real property and into which temporary connections could be made; and

WHEREAS all parties agreed that said real property may be temporarily connected to and serviced by the City of Bellevue sewer system until such time as the Kirkland sewer system has extended their facilities into the area and can provide sewer service to said real property;

NOW, THEREFORE, in consideration of the terms and agreements hereinafter set forth, the parties agree as follows:

1. The City of Kirkland and the City of Bellevue agree that the owner may connect the real property, hereinafter described, into and be served by the Bellevue sewer system in accordance with the requirements and payment of costs set forth in Exhibit A attached hereto and incorporated herein; and for so long as said real property is so connected to the Bellevue sewer system, the occupants of said property shall be treated as customers of the Bellevue sewer system for all purposes including the billing and collection of service charges. Provided, however, that this arrangement shall continue pursuant to this agreement only until such time as the facilities of the City of Kirkland sewer system may be extended into the general area in which the real property is situate, and at such time as a service connection for said real property shall be made to the City of Kirkland sewer system and said real property shall be disconnected from the Bellevue sewer system.

2. The owner of the hereinafter described real property agrees and covenants with the City of Kirkland that said property shall be disconnected from the Bellevue sewer system facilities and reconnected to the City of Kirkland sewer system facilities at such time, after the Kirkland sewer system facilities have

been extended into the area within which said real property is located, as notice to make such connections to the Kirkland sewer system is given by the City of Kirkland.

3. At the time that said real property shall connect into the Kirkland sewer system, there shall be paid to the City of Kirkland by Yarrow Point Partners, their successors or assigns, all connection charges, fees and assessments, as would be required to be paid for connecting said real property at that time to the particular City of Kirkland utility system, not withstanding the existence of this agreement; provided, however, that the sum of said charges, fees and assessments shall be reduced by the amount, if any, paid by the owner to the City of Bellevue for the privilege of connecting to the said Bellevue sewer system at the time that the temporary connection is made pursuant to this agreement.

4. It is the intention of all of the parties hereto that the obligations imposed upon the hereinafter described real property, and agreed to and assumed by the owners thereof, shall run with the land; and a copy of this agreement shall be recorded as a public record in the office of the King County Department of records and elections.

The real property subject to this agreement is described as:

Beginning at the intersection of the south line of Block F of Yarrow, according to plat recorded in Vol. 15 of Plats, page 92, in King County, Washington and the west line of Govt. Lot 8 in Sect. 19, Township 25 North, Range 5 E. W.M. in King County, Washington; Thence North 88°16'08" West 190.00 feet; Thence North 1°29'18" East 335.00 feet to the true point of beginning; Thence South 88°30'42" East 150.00 feet; Thence North 1°29'18" East to the Northerly line of said Tract F; Thence westerly along said Northerly line to the Northwest corner thereof; Thence Southerly along the Westerly line of said Tract F to a point which bears North 88°30'42" West from the true point of beginning; Thence South 88°30'42" East to the true point of beginning; EXCEPT the Westerly 5 feet & the Northerly 5 feet thereof; TOGETHER WITH an easement for road & utility purposes over a strip of land 50 feet in width, lying South of above described tract & lying North of Northeast 38th Street, the West line of said 50 foot strip bearing South 1°29'18" West from the true point of beginning of above described main tract.

CITY OF KIRKLAND

By _____

CITY OF BELLEVUE

By _____

OWNERS, YARROW POINT PARTNERS

_____
DOUGLAS J. DODDS

_____
CAROLYN J. DODDS

_____
BRUCE J. DODDS

_____
MARY J. DODDS

_____
RICHARD U. CHAPIN

STATE OF WASHINGTON)
) ss
COUNTY OF KING)

On this 11th day of June, 1980, before, the undersigned, a Notary Public in and for the State of Washington, duly commissioned and sworn personally appeared DOUGLAS J. DODDS to me known to be the individual described in and who executed the foregoing and acknowledged to me that he signed the said AGREEMENT as his free and voluntary act and deed for the uses and purposes therein mentioned.

WITNESS my hand and official seal hereto affixed this day and year in this certificate above written.

Shirley A. Pass
NOTARY PUBLIC in and for the State of Washington, residing at Redmond

STATE OF WASHINGTON)
)ss.
COUNTY OF KING)

On this 11th day of June, 1980, before, the undersigned, a Notary Public in and for the State of Washington, duly commissioned and sworn personally appeared CAROLYN J. DODDS to me known to be the individual described in and who executed the foregoing and acknowledged to me that he signed the said AGREEMENT as her free and voluntary act and deed for the uses and purposes therein mentioned.

WITNESS my hand and official seal hereto affixed this day and year in this certificate above written.

Shirley A. Pass
NOTARY PUBLIC in and for the State of Washington, residing at Redmond

STATE OF WASHINGTON)
) ss
COUNTY OF KING)

On this 11th day of June, 1980, before, the undersigned, a Notary Public in and for the State of Washington, duly commissioned and sworn personally appeared BRUCE J. DODDS to me known to be the individual described in and who executed the foregoing and acknowledged to me that he signed the said AGREEMENT as his free and voluntary act and deed for the uses and purposes therein mentioned.

WITNESS my hand and official seal hereto affixed this day and year in this certificate above written.

Shirley A. Pass
NOTARY PUBLIC in and for the State of Washington, residing at Redmond

STATE OF WASHINGTON)
)ss.
COUNTY OF KING)

On this 11th day of June, 1980, before, the undersigned, a Notary Public in and for the State of Washington, duly commissioned and sworn personally appeared MARY J. DODDS to me known to be the individual described in and who executed the foregoing and acknowledged to me that he signed the said AGREEMENT as her free and voluntary act and deed for the uses and purposes therein mentioned.

WITNESS my hand and official seal hereto affixed this day and year in this certificate above written.

Shirley A. Pass
NOTARY PUBLIC in and for the State of Washington, residing at Redmond

STATE OF WASHINGTON)
) ss.
COUNTY OF KING)

On this 11th day of June, 1980, before, the undersigned, a Notary Public in and for the State of Washington, duly commissioned and sworn personally appeared RICHARD U. CHAPIN, to me known to be the individual described in and who executed the foregoing and acknowledged to me that he signed the said AGREEMENT as his free and voluntary act and deed for the uses and purposes therein mentioned.

WITNESS my hand and official seal hereto affixed this day and year in this certificate above written.

Shirley A. Pass
NOTARY PUBLIC in and for the State of Washington, residing at Redmond

STATE OF WASHINGTON)
)ss.
COUNTY OF KING)

On this 8th day of July, 1980, before, the undersigned, a Notary Public in and for the State of Washington, duly commissioned and sworn personally appeared ALLEN B. LOCKE to me known to be the City Manager of THE CITY OF KIRKLAND of the municipal corporation that executed the within and foregoing instrument, acknowledge the said instrument to be the free and voluntary act and deed of said corporation for the uses and purposes therein mentioned, and on oath stated that was authorized to execute said instrument.

WITNESS my hand and official seal hereto affixed this day and year in this certificate above written.

Sally J. Rucci
NOTARY PUBLIC in and for the State of Washington, residing at Redmond

STATE OF WASHINGTON)
) ss.
COUNTY OF KING)

On this _____ day of _____, 19____, before, the undersigned, a Notary Public in and for the State of Washington, duly commissioned and sworn personally appeared
to me known to be the of THE CITY OF BELLEVUE of the coporation that executed the within and foregoing instrument, and acknowledged the said instrument to be the free and voluntary act and deed of said corporation for the uses and purposes therein mentioned, and on oath stated that he was authorized to execute said instrument.

WINTESS my hand and official seal hereto affixed this day and year in this certificate above written.

NOTARY PUBLIC in and for the State of Washington, residing at

EXHIBIT "A"

Costs

Trunkage	1.6¢ per square foot of area served
Service Charge	12¢ per month per residential customer or residential equivalent

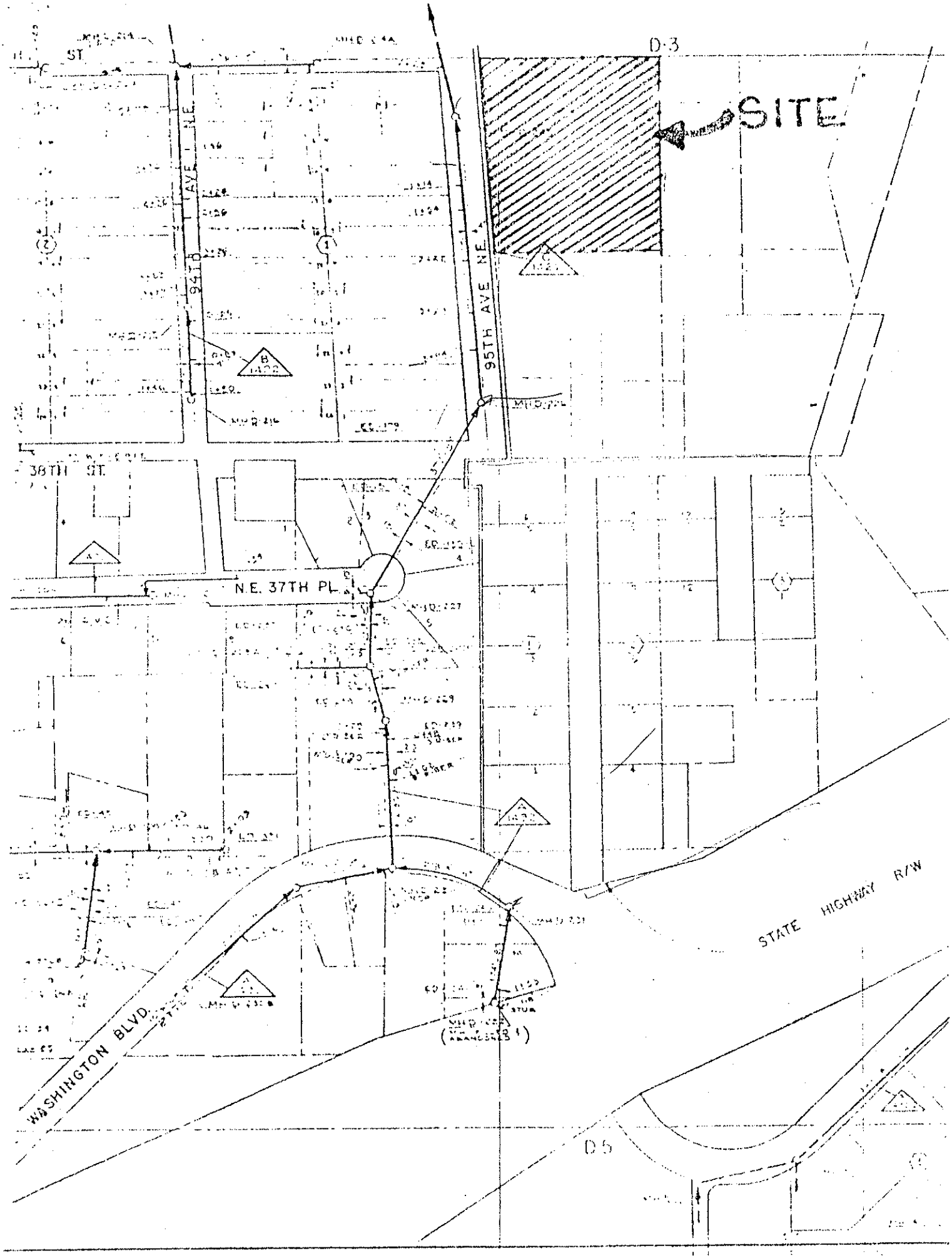
SITE
D-3
94TH AVE NE
95TH AVE NE
38TH ST.
N.E. 37TH PL.
STATE HIGHWAY R/W
WASHINGTON BLVD.
D-5

ORIGINAL

CITY OF BELLEVUE, WASHINGTON

RESOLUTION NO. 3609

A RESOLUTION authorizing execution of an agreement between the City of Kirkland and the City of Bellevue and Yarrow Point Partners to provide sanitary sewer service to an area within the City of Kirkland.

THE CITY COUNCIL OF THE CITY OF BELLEVUE, WASHINGTON, DOES RESOLVE AS FOLLOWS:

Section 1. The City Manager or her designee is hereby authorized and directed to execute, on behalf of the City, that certain agreement between the City of Kirkland and the City of Bellevue and Yarrow Point Partners to provide sanitary sewer service to an area within the City of Kirkland, which has been given Clerk's Receiving No. 6330.

PASSED by the City Council this 28 day of July, 1980, and signed in authentication of its passage this 28 day of July, 1980.

(SEAL)

Richard M. Foreman, Mayor

Attest:

Patricia K. Weber, City Clerk

RESOLUTION NO. R - 2687

A RESOLUTION OF THE KIRKLAND CITY COUNCIL AUTHORIZING THE CITY MANAGER TO SIGN ON BEHALF OF THE CITY OF KIRKLAND AN AGREEMENT WITH THE CITY OF BELLEVUE TO PROVIDE SANITARY SEWER SERVICE TO AN AREA WITHIN THE CITY OF KIRKLAND ADJACENT TO THE CITY OF BELLEVUE WITHIN THE VICINITY OF WATERSHED PARK.

WHEREAS, both the City of Kirkland and the City of Bellevue are authorized by State law to enter into interlocal governmental cooperative agreements; and

WHEREAS, the area described and designated within Exhibit "A" (attached hereto and by this reference incorporated herein) as subject area lies within the City of Kirkland and sewer service area of the City of Kirkland Sanitary Sewer System; and

WHEREAS; said area is not presently connected to the Kirkland Sanitary Sewer System, and because of the topography of the area may not readily be so connected; and

WHEREAS, the service area and corporate boundaries of the City of Bellevue and its sanitary sewer system lie adjacent to the subject area and the subject area can conveniently be connected into a Bellevue Sewer System facility existing or under construction; and

WHEREAS, both parties are desirous where possible and convenient to mutually assist one another,.

NOW, THEREFORE, be it resolved by the City Council of the City of Kirkland as follows:

Section 1. That certain agreement relating to sanitary sewer service, attached to the original of this Resolution as Exhibit "A" and by this reference incorporated herein, is hereby approved by the Kirkland City Council, and the City Manager for the City of Kirkland is hereby authorized and directed to sign said contract on behalf of the City of Kirkland.

PASSED by majority vote of the Kirkland City Council in regular meeting on the 17th day of December, 1979

SIGNED IN AUTHENTICATION thereof on the 17th day of December, 1979.

s/ Robert R. Nau
MAYOR

ATTEST:

s/ Tom J. Anderson
Director of Administration & Finance
(ex officio City Clerk)

I hereby certify that the foregoing is a true and correct copy of a Resolution of the City of Kirkland and that the same was published or posted according to law, said Resolution being No. R-2687 entitled "A Resolution as above.

Arnold J. Jensen — City Clerk.

FILED NO. 5892
CITY OF BELLEVUE
DATE 1-25-80
CITY CLERK P. Wilson
Rec # 3505

AGREEMENT

This agreement made and entered into this day by and between the City of Kirkland, an optional code city, hereinafter referred to as "Kirkland" and the City of Bellevue, an optional code city, hereinafter referred to as "Bellevue",

W I T N E S S E T H :

WHEREAS, both Kirkland and Bellevue are authorized by State law to enter into cooperative agreements; and

WHEREAS, the area described and designated on Exhibit "A" (attached hereto and by this reference incorporated herein) as subject area of the City of Kirkland sanitary sewer system; and

WHEREAS, said area is not presently connected to the Kirkland sanitary sewer system, and because of the topography of the area, may not readily be so connected; and

WHEREAS, the service area and corporate boundaries of the City of Bellevue and its sanitary sewer system lie adjacent to the subject area and the subject area can conveniently be connected into a Bellevue sewer system facility existing or under construction; and

WHEREAS, both parties are desirous where possible and convenient to mutually assist one another.

NOW, THEREFORE, in consideration of the agreements herein contained, it is agreed as follows:

Section 1. All sanitary sewer facilities to be constructed within the subject area described and designated on Exhibit "A", as attached hereto and by this reference incorporated herein, shall upon construction and acceptance, become for all purposes, including customer service charges and maintenance,

part of the Kirkland sanitary sewer system, but may, nevertheless, be connected into the Bellevue sewer system sanitary facility line lying within ten feet (10') and at the point so designated as "connection point" on Exhibit "A".

Section 2. Bellevue agrees to accept all sewage entering into its system through said connection point and to convey same through its sytem to its connection with the municipality of Metropolitan Seattle System.

Section 3. No part of the cost of construction of the sanitary sewer facilities to be constructed within subject area, nor any of its future maintenance or repair, shall be borne by the City of Bellevue.

Section 4. City of Kirkland agrees to pay over to City of Bellevue as to each property within subject area, as it makes sewer connection, an amount equal to 1.6¢ per square foot of area of each property. In addition thereto, Kirkland will pay to Bellevue a monthly service trunkage charge in an amount equal to 12¢ per month per residential customer or residential equivalent, actually connected and served by the facilities of the Kirkland sewer system within the subject area.

Section 5. Neither party shall by virtue of this agreement acquire any proprietory or governmental interest in the sewage system or sewer line of the other party. Each party shall be solely responsible for the operation and maintenance of its own system of sewage collection and shall save the other party hamless from any claim for damage, real or imaginary, made by a third party, and alleging negligence or misfeasance in the operation or maintenance of the other party's system, or in the acts or ommissions of its own officers or employees.

Section 6. This writing embodies the entire agreement of the parties. There are no promises, terms, conditions, or obligations other than those contained herein. This agreement may be amended only by written instrument signed by both parties.

Section 7. No waiver by either party of any term or condition of this agreement shall be deemed or construed as a waiver of any other term or condition, nor shall a waiver of any subsequent breach, whether of the same or of a different provision of this agreement.

Section 8. This agreement shall terminate upon six (6) months written notice given by either party to the other party. In the event of termination under this paragraph, all costs of disconnection shall be borne by the party requesting the termination.

THIS AGREEMENT SIGNED the 28 day of January, 1979.

CITY OF KIRKLAND

By [signature]

CITY OF BELLEVUE

By [signature]

Execution of this agreement approved on behalf of the City of Bellevue by resolution of its City Council, adopted the 28 day of January, 1979, and authorized by the City of Kirkland by Resolution No. R-2687 of the Kirkland City Council, adopted the 17th day of December, 1979.

Approved as to form:

William C. Travers
Assistant City Attorney

Exhibit "A"

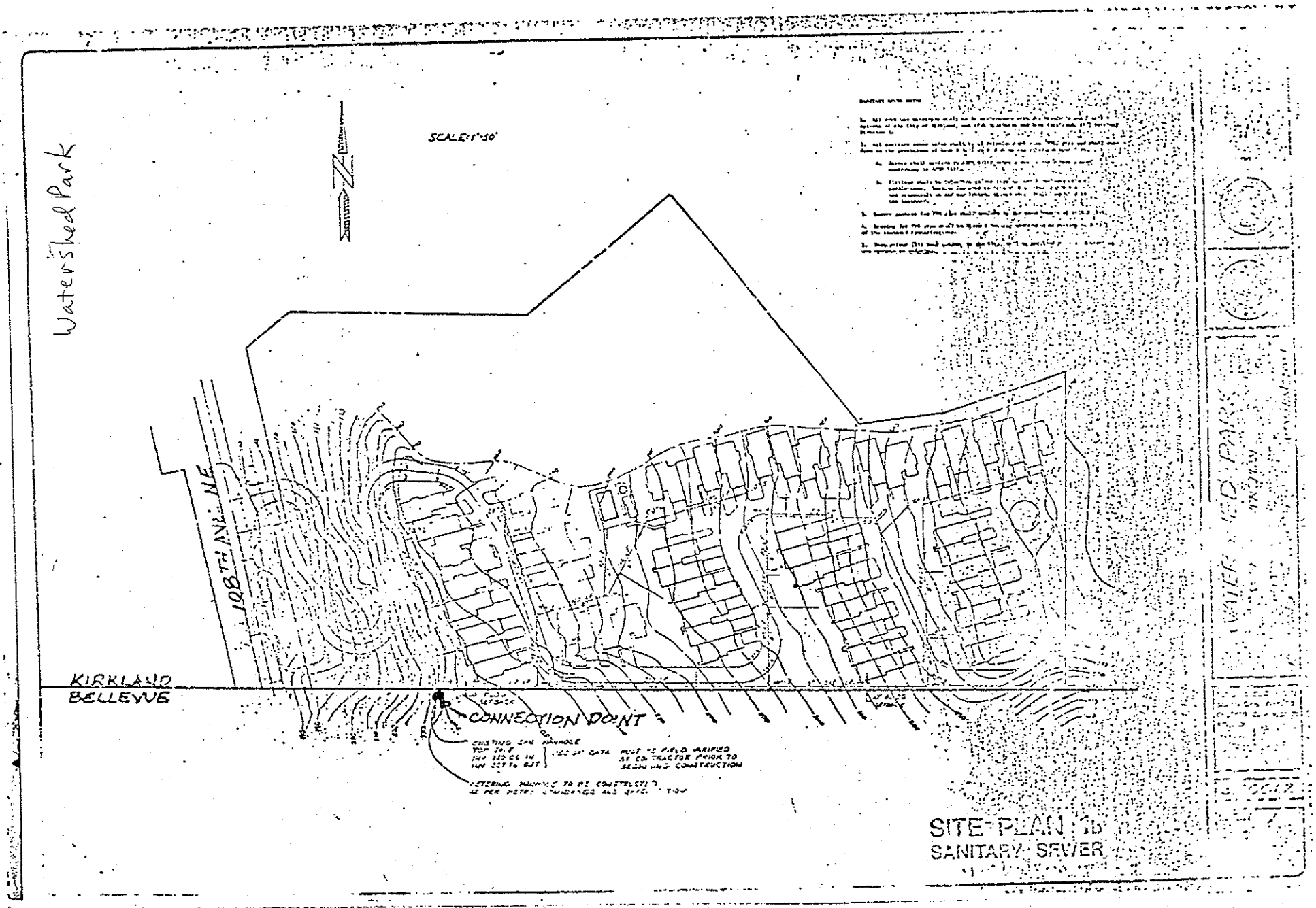
Watershed Park
SCALE: 1"=50'
108TH AVE. NE
KIRKLAND
BELLEVUE
CONNECTION POINT
SITE PLAN 1b
SANITARY SEWER

1-15-80

ORIGINAL

CITY OF BELLEVUE, WASHINGTON

RESOLUTION NO. 3505

A RESOLUTION authorizing execution of an agreement between the City of Kirkland and the City of Bellevue to provide sanitary sewer service to an area within the City of Kirkland.

THE CITY COUNCIL OF THE CITY OF BELLEVUE, WASHINGTON, DOES RESOLVE AS FOLLOWS:

Section 1. The Acting City Manager or his designee is hereby authorized and directed to execute, on behalf of the City, that certain agreement between the City of Kirkland and the City of Bellevue to provide sanitary sewer service to an area within the City of Kirkland, which has been given Clerk's Receiving No. 5892

PASSED by the City Council this 28 day of January, 1980, and signed in authentication of its passage this 28 day of January, 1980.

(SEAL)

Richard M. Foreman, Mayor

Attest:

Patricia K. Weber, City Clerk

INTERLOCAL AGREEMENT
Transfer of Service Area, Amendment and Termination of the Wheeling Agreement and Construction of Improvements

This agreement ("Agreement") is made this 19th day of April, 2017, between the Northshore Utility District, a municipal corporation in King County, Washington ("District") and the City of Kirkland, a municipal corporation in King County, Washington ("City"). City and District are collectively referred to as "Parties."

RECITALS

(a). City and District are both providers of public water and sewer services within the limits of City. While City serves the southern portion of its corporate boundaries, District serves the northern portion including the Totem Lake Area ("TLA").

(b). District provides sanitary sewer service to the TLA drainage basin (as identified in Exhibit "A") via a major sewer trunk line, flowing east-to-west, known as the Totem Lake Trunk.

(c). City provides sanitary sewer service to one of its drainage sub-basins (the "116 Basin"), located along 116th Avenue NE as identified in Exhibit "A", by discharging the sewage collection into District's system for conveyance or "wheeling" to King County for treatment, via the Totem Lake Trunk generally following the alignment of NE 124th Street, from approximately 132nd Avenue NE to the King County trunk line connection at approximately 100th Ave NE. This arrangement is covered by the terms of an existing inter-local agreement, dated January 4, 1976, and attached as thereafter amended as Exhibit "B", ("Wheeling Agreement").

(d). Wheeling Agreement allows District to preserve the capacity of the Totem Lake Trunk for the demand of its own service area and allows either party to terminate the arrangement with a one-year written notice.

(e). City has made certain land use plans identified as "Totem Lake Housing Incentive Areas" in its comprehensive planning document, which will add more housing units to TLA and is expected to increase the flow volume through the Totem Lake Trunk.

(f). Totem Lake Trunk is currently at or over capacity and cannot accommodate additional sewage flow.

(g). A developer, the Wolff Company, has proposed the re-development of the Lifebridge Church site within 116 Basin. If constructed, the proposed re-development project will add approximately 550 dwelling units to TLA drainage basin. Other major projects, presently under construction or identified for re-development, will also add a significant number of dwelling units to the sewer system drainage basin served by the Totem Lake Trunk.

(h). To adequately prepare to serve the additional future housing units in TLA drainage basin, including the 116 Basin, improvements to the District sanitary sewer system must be constructed. These improvements consist of one or more of the followings:

- Slip-lining of the Totem Lake Trunk to increase capacity.
- Construction of an additional sewer main generally parallel to the existing Totem Lake Trunk to bypass the Totem Lake Trunk.
- Construction of a trunk line that will convey wastewater flows from the TLA easterly along the NE 124th Street corridor into the King County system located in the Sammamish Valley.
- Other sewer system improvements as may be necessary to expand the capacity of the District's sanitary sewer system to serve future developments in TLA drainage basin.

The improvements required to accommodate the increase in demand for service in TLA drainage basin, as described above, shall hereinafter be referred to as "TLA Sewer Improvements."

(i). District has the resources and is willing to build the TLA Sewer Improvements to address the increase demand in TLA drainage basin and to take over as the direct retail sewer service provider of the 116 Basin under the conditions described in this Agreement.

AGREEMENT

In consideration of the terms and conditions contained herein, the Parties now agree as follows:

1. On a date agreed to by both Parties, but no later than June 30, 2017 ("Transfer Date"), City shall transfer all sewer accounts and local collection facilities within the 116 Basin to District at no cost to District and the Wheeling Agreement shall be deemed amended as of the Transfer Date to allow termination to occur under the Wheeling Agreement, which shall also occur as of the Transfer Date by entering into this Agreement. City will pay District the pro rata wheeling charge owed under the Wheeling Agreement through that date. District shall take over as the direct provider of retail sewer service to all connections within the 116 Basin in the same manner that it serves all other customers of District. To accomplish the transfer, the Parties agree to the followings:

    (a) City shall provide District with electronic and hard copy files of customer accounts information, as-built drawings of facilities if available, all information related to sanitary sewer service operation and maintenance, such as service records, repairs, video records, grease interceptors, etc. of the 116 Basin.

    (b) If necessary, City shall assign to District all easements for the location of local collection facilities within the 116 Basin.

(c) City shall assign and provide copies of any special agreements affecting the local sewer facilities to be transferred.

(d) District and City will work together to notify impacted customers and ensure a smooth billing transition on the Transfer Date.

2. District shall provide a letter of service availability with normal stipulations, including the execution of this Agreement, to the Wolff Company for the re-development of the Lifebridge Church site. District will provide the same to any other developers within the TLA upon request following the execution of this Agreement.

3. District shall start the planning and construction of TLA Sewer Improvements immediately following the execution of this Agreement at District expense.

4. District has established a cost estimate for the TLA Sewer Improvements of approximately $9 million. This estimate is divided by the 4,657 additional equivalent multi-family dwelling units, as provided by the City Planning staff, anticipated to be served by the TLA Sewer Improvements to arrive at a Capacity Expansion Connection Charge (CECC) of $1,926 per equivalent multiple-family dwelling unit. The final CECC may be more or less than $1,926 depending on the actual cost of the TLA Sewer Improvements but it shall still be calculated by dividing by 4,657. The CECC may also be adjusted by District in future years for inflation. The CECC will be charged to all new connections served by the TLA Sewer Improvements or the Totem Lake Trunk over and above District's regular sewer connection charges.

5. Starting with the collection of the first CECC, District shall keep accurate records of the number of new connections in TLA. District shall also keep accurate records of the engineering, design, construction, labor, material, permitting and all other costs incurred for the TLA Sewer Improvements.

6. If another capital project of similar scale, and under similar circumstances, is required within the jurisdictional boundaries of another city served by the District and said capital project will benefit <u>only</u> that city, District will require that city to enter into a similar Agreement.

7. City agrees to collect the CECC from future developments to be served by TLA Sewer Improvements or the Totem Lake Trunk at the rate in effect at that time and pay those CECCs to District until 4,657 equivalent multiple-family dwelling units have connected in TLA drainage basin or for 20 years after any assumption, whichever first occurs, should it choose to exercise its statutory authority pursuant to Chapter 35.13A RCW or other statutes to assume jurisdiction over District or any District responsibilities, property, facilities, equipment or utility customers located within areas served by the TLA Sewer Improvements or the Totem Lake Trunk. Said payments by City shall be separate and in

addition to any statutory obligations that City may have in the event of the above-mentioned assumption.

8. A copy of this Interlocal Agreement shall be filed with the City Clerk and the King County Recorder's Office.

9. This agreement shall go into effect immediately upon being signed by both Parties.

10. District agrees to defend, indemnify and hold harmless City, its elected and appointed officials, officers, agents, and employees from and against any and all claims, losses and liability for injuries, sickness, death or property damage, arising from any act, error or omission in the performance of the Agreement, except to the extent caused by the sole negligence of City.

11. City agrees to defend, indemnify and hold harmless District, its elected and appointed officials, officers, agents, and employees from and against any and all claims, losses and liability for injuries, sickness, death or property damage, arising from any act, error or omission in the performance of the Agreement, except to the extent caused by the sole negligence of District.

12. This Agreement constitutes the final and completely integrated agreement between the Parties concerning the subject matter herein and shall supersede all prior agreements, oral or otherwise regarding its subject matter. No modification or amendment of this Agreement shall be valid or effective unless evidenced in writing and signed by both parties.

CITY:

CITY OF KIRKLAND

By _____

Kurt Triplett, City Manager

DISTRICT:

NORTHSHORE UTILITY DISTRICT

By _____

Fanny Yee, its General Manager

Approved as to Form:

OFFICE OF THE CITY ATTORNEY

By _____

Wm. R. Evans
Assistant City Attorney

Approved as to Form:

DISTRICT GENERAL COUNSEL

By _____

Kinnon Williams
Inslee Best Doezie and Ryder, PS

EXHIBIT A

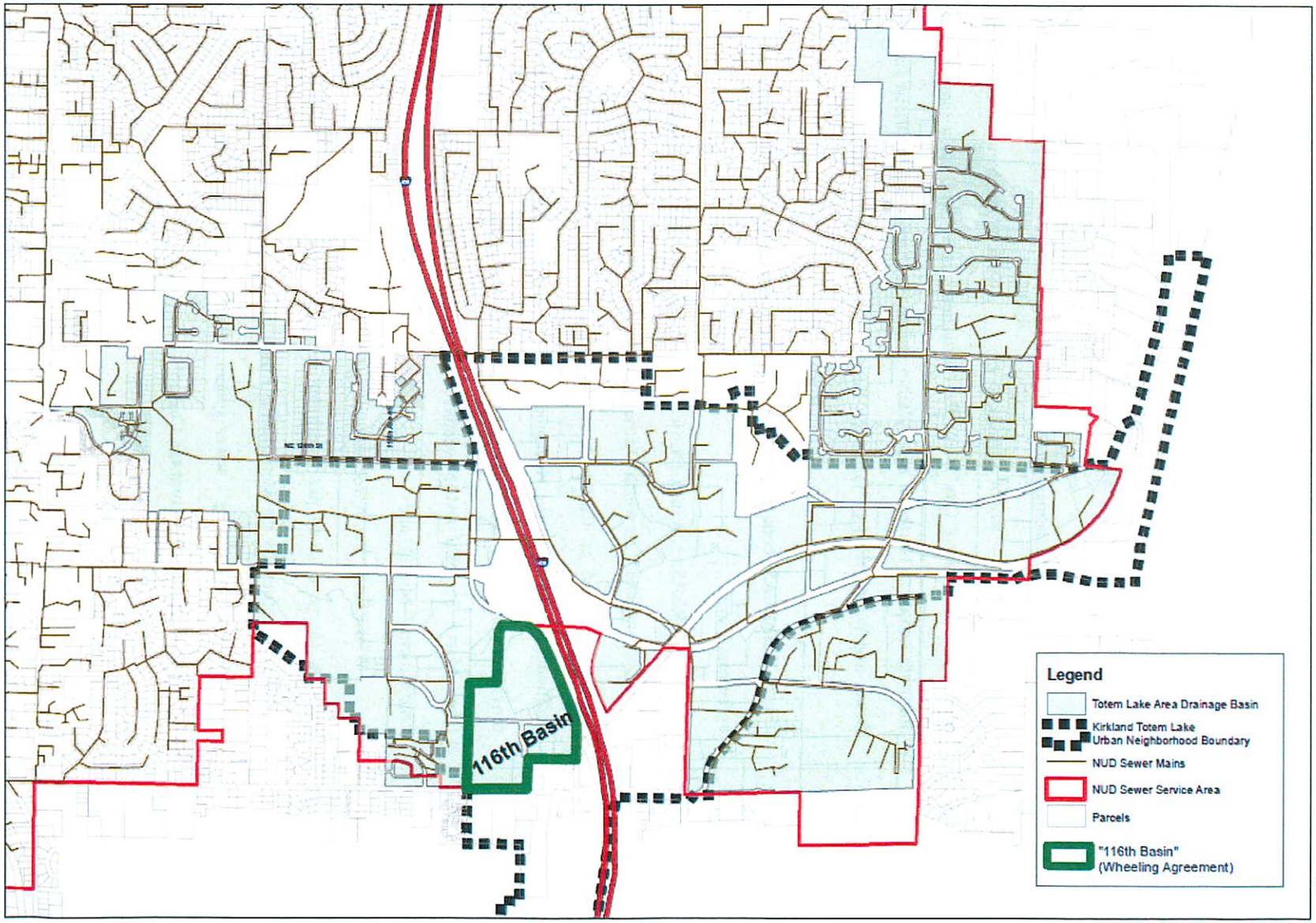
116th Basin
Legend
Totem Lake Area Drainage Basin
Kirkland Totem Lake
Urban Neighborhood Boundary
NUD Sewer Mains
NUD Sewer Service Area
Parcels
"116th Basin"
(Wheeling Agreement)

Exhibit B
Wheeling Agreement

1996-1-3-NUD Resolution.

FIRST AMENDMENT TO
SEWER SERVICE AGREEMENTS

This First Amendment to Sewer Service Agreements ("First Amendment") is made and entered into this 8 day of JANUARY, 1996, by and between the City of Kirkland, an optional code city ("City"), and the Northshore Utility District, a municipal corporation formerly known as Northeast Lake Washington Sewer District and Northeast Lake Washington Sewer and Water District ("District"), for the purposes set forth below.

RECITALS:

WHEREAS, both City and District are authorized by state law to enter into cooperative agreements, and

WHEREAS, City and District previously entered into an Agreement dated March 3, 1978, copy attached, in which District agreed to provide sewer service to the property within the City described on Exhibit A to the Agreement, and City and District entered into an additional Agreement dated November 5, 1979, copy attached, in which District agreed to provide sewer service to the property within the City described on Exhibit A to the Agreement (such March 3, 1978 and November 5, 1979 agreements collectively referred to as the "Agreements" herein), and

WHEREAS, the Agreements provided that City shall pay District a monthly sewer trunkage charge of $.40 per month for residential customer or residential unit equivalent ("ERU") as defined by the Metropolitan King County Council ("METRO") actually connected to and served by the City's sewer system within the areas described on Exhibit A in the Agreements (the "Sewer Trunkage Charge"), and

Exhibit B
Wheeling Agreement

WHEREAS, the District's operation and maintenance expenses have increased substantially since the parties entered into the Agreements and District has requested that the Agreements be amended to (a) change the monthly Sewer Trunkage Charge to $1.85 per ERU to reimburse District for its operation and maintenance expenses incurred relating to the sewer service provided under the Agreements, and (b) provide for the adjustment of such Sewer Trunkage Charges hereinafter for District operation and maintenance expenses incurred to provide sewer service under the Agreements, and

WHEREAS, City is agreeable to such amendment of the Agreements subject to the terms and conditions below,

NOW, THEREFORE, in consideration of the Agreements set forth herein, the parties agree to amend the Agreements as follows:

1. Equivalent Residential Unit. Commencing January 1, 1993, METRO's definition of an ERU was changed from 900 cu.ft. of water usage per month to 750 cu.ft. per month. For the purposes of computing Sewer Trunkage Charges under this First Amendment, the 750 cu.ft. per month definition shall be used; provided that if the METRO definition of an ERU changes in the future, the definition of an ERU for the purposes herein shall change accordingly effective the date of such change. The parties also acknowledge that METRO merged into King County on January 1, 1995 and that the King County Department of Metropolitan Services succeeded to Metro's duties and functions and that such King County department shall be considered METRO for the purposes of this First Amendment.

2. Sewer Trunkage Charges. Section 4 of the Agreements are amended to provide that the monthly Sewer Trunkage Charge shall be increased to $1.85 per month per ERU commencing the 1 day of FEBRUARY, 1996. In addition, such Sewer Trunkage

Exhibit B
Wheeling Agreement

Charge shall be adjusted every two years thereafter. The adjustment shall be based on District's operation and maintenance expenses, as defined in the District's accounting records, including but not limited to, the District's general ledger and income statement ("Expenses"), but excluding Metro service charges. Effective every two (2) years from the date of this First Amendment, the monthly Sewer Trunkage Charge per ERU in the Agreements shall be determined as follows:

(a) The District's Expenses for the prior year shall be identified;

(b) The Total number of ERUs reported by the District to Metro for the final reporting period of the preceding year plus the total number of ERUs which are the subject of the Agreements reported by the City to Metro for the final reporting period of the preceding year shall be identified;

(c) The Expenses as determined in paragraph 2(a) herein shall be divided by the total number of ERUs as determined in paragraph 2(b) herein to determine the adjusted Sewer Trunkage Charge. City shall thereafter pay such adjusted Sewer Trunkage Charge per ERU in the Agreements to the District until such charge is adjusted further as provided herein.

3. No Other Changes. Except as expressly modified herein, the Agreements shall remain unchanged and in full force and effect.

4. Effective Date. This First Amendment shall take effect upon its approval by the District's Board of Commissioners and the City of Kirkland Council.

SIGNED this 4th day of January, ~~1995~~ 1996

CITY OF KIRKLAND

By: Jeremy L. Gilbert

Its: City Manager

F:\DMS\JWM\0087642.01 12/18/95

Exhibit B
Wheeling Agreement

Approved as to form:

OFFICE OF THE CITY ATTORNEY

By: Oskan Rey

NORTHSHORE UTILITY DISTRICT

By: _____
Its: PRESIDENT

STATE OF WASHINGTON)
) ss.
COUNTY OF KING)

I certify that I know or have satisfactory evidence that _____ is the person who appeared before me, and said person acknowledged that he signed this instrument, on oath stated that he was authorized to execute the instrument and acknowledged it as the _____ of the City of Kirkland to be the free and voluntary act of such corporation for the uses and purposes mentioned in the instrument.

Dated_____

_____
NAME:_____
(Print Name)
Notary Public in and for the State of Washington.
Commission Expires: _____

F:\DMS\JWM\0087642.01 12/18/95

Exhibit B
Wheeling Agreement

STATE OF WASHINGTON)
) ss.
COUNTY OF KING)

I certify that I know or have satisfactory evidence that D. BRUCE GARDINER is the person who appeared before me, and said person acknowledged that he signed this instrument, on oath stated that he was authorized to execute the instrument and acknowledged it as the PRESIDENT of Northshore Utility District to be the free and voluntary act of such corporation for the uses and purposes mentioned in the instrument.

Dated JAN 08 1996

NAME: RONALD A GEHRKE
(Print Name)

Notary Public in and for the State of Washington.
Commission Expires: 3-30-98

RONALD A. GEHRKE
COMMISSION EXPIRES
NOTARY PUBLIC
3-30-98
STATE OF WASHINGTON

F:\DMS\WM\0087642.01 12/18/95

Exhibit B
Wheeling Agreement

NORTHSHORE UTILITY DISTRICT
KING COUNTY, WASHINGTON

RESOLUTION NO. 1996-1-3

A RESOLUTION OF THE BOARD OF COMMISSIONERS OF THE NORTHSHORE UTILITY DISTRICT OF KING COUNTY, WASHINGTON, APPROVING THE FIRST AMENDMENT TO SEWER SERVICE AGREEMENTS WITH THE CITY OF KIRKLAND.

WHEREAS, Fanny Yee, District Comptroller, has requested that the District Board of Commissioners approve an amendment to certain sewer service agreements with the City of Kirkland to increase Kirkland's payments to the District for the wheeling of sewer service; now, therefore,

BE IT RESOLVED by the Board of Commissioners of the Northshore Utility District of King County, Washington, that the First Amendment to Sewer Service Agreements in the form attached hereto as Exhibit "A" and incorporated herein by this reference with the City of Kirkland is hereby approved, and that D. Bruce Gardiner is authorized and directed to execute such Amendment on behalf of the District.

ADOPTED by the Board of Commissioners of the Northshore Utility District of King County at the regular open public meeting thereof held January 8, 1996.

D. BRUCE GARDINER

TRUDY ROLLA

COPY

KINNON WILLIAMS

MICHAL McALLISTER

D. A. ELLIS

Exhibit B
Wheeling Agreement

ORIGINAL

(also known as agreement 2)

RESOLUTION 1979-11-5

A RESOLUTION of Northeast Lake Washington Sewer District of King County, Washington, authorizing execution of Joint Use Agreement between Northeast Lake Washington Sewer District and City of Kirkland.

Kirk Res R. 2655

WHEREAS, the District has common boundaries with the City of Kirkland, hereinafter referred to as "City"; and

WHEREAS, the district received a request from City to provide sanitary sewer service to property located within City; and

WHEREAS, said area is not presently connected to the existing City Sewer system, and because of the topography of the area may not readily be so connected; and

WHEREAS, the subject area can conveniently connect into the existing district facilities; and

WHEREAS, both districts are authorized by Chapter 39.34 of the Revised Code of Washington to enter into Intergovernmental Cooperative Agreements; and

WHEREAS, both District and City are desirous of assisting one another; now, therefore,

BE IT RESOLVED that Northeast Lake Washington Sewer District is hereby authorized and directed to enter into an Intergovernmental Cooperative Agreements with the City of Kirkland, attached hereto and labeled Exhibit A incorporated herein by this reference, and the Commissioners are authorized to execute the same on behalf of the District.

PASSED BY THE BOARD OF COMMISSIONERS of Northeast Lake Washington Sewer District of King County, Washington at the regular meeting held November 5, 1979.

D. A. ELLIS, President & Commissioner

RUSSEL D. COFFEY, Secretary & Commissioner

C. W. DAVIDSON, Commissioner

Exhibit B
Wheeling Agreement

AGREEMENT

THIS AGREEMENT made and entered into this day, by and between the City of Kirkland, an optional code city, hereafter referred to as "city"; and Northeast Lake Washington Sewer District of King County, Washington, a municipal corporation, hereinafter sometimes referred to as "sewer district".

W I T N E S S E T H

WHEREAS, both city and sewer district are authorized by state law to enter into cooperative agreements, and

WHEREAS, the area described and designated on Exhibit A, attached hereto and by this referenced incorporated in full herein, as subject area lies within the City of Kirkland and the sewer service area of the City of Kirkland Sanitary Sewer System, and

WHEREAS, the North Kirkland Improvement Project (L.I.D. 115) includes the installation of sanitary sewer service facilities within said subject area, and

WHEREAS, said area is not presently connected to the existing Kirkland Sanitary Sewer System, and because of the topography of the area may not readily be so connected, and

WHEREAS, the service area and corporate boundaries of Northeast Lake Washington Sewer District lie adjacent to subject area, and subject area can conveniently connect into the existing Northeast Lake Washington Sewer System facilities, and

Exhibit B
Wheeling Agreement

WHEREAS, both parties are desirous where possible and convenient to mutually assist one another under terms and conditions as set forth herein, now, therefore,

IN CONSIDERATION of the agreements herein contained, it is agreed as follows:

Section 1. All sanitary sewer facilities to be constructed within the subject area as a part of or in connection with Local Improvement District No. 115, and the North Kirkland Improvement Project (which facilities are described and designated on Exhibit A, as attached hereto, and by this reference incorporated herein), shall upon construction and acceptance become for all purposes including customer service charges and maintenance, part of the Kirkland Sanitary Sewer System, but may nevertheless, be connected into the Northeast Lake Washington Sewer District sanitary sewer trunkage facilities at the point or points so designated as "connection point" on Exhibit A. Prior to making connection, city shall notify sewer district of the intended date of connection so that sewer district may cause its engineers to be physically present and to inspect and approve the connection to the sewer district's system. All costs of making said connection in complying with all federal, state and other applicable regulatory agency requirements shall be at the sole cost and expense of city.

Section 2. Sewer district agrees to accept sewage only from the area described in Exhibit A entering into its system

Exhibit B
Wheeling Agreement

through said designated connection point and agrees to convey the same through its system to its connection with the municipality of Metropolitan Seattle System. The providing of this service by sewer district to city shall be subject to all requirements, rules and regulations of the municipality of Metropolitan Seattle (METRO), and agrees to pay all fees due METRO with respect to the sewage entering sewer district's system. Should it hereafter be claimed or asserted by sewer district or METRO that there are excessive flows due to infiltration or other reasons from the area described in Exhibit A resulting in increased METRO charges to sewer district, then city agrees to install a metering device to measure the flow entering district's system at the connection points.

Section 3. It is acknowledged that city has designed and constructed the sewer system within Exhibit A and that all costs of construction and of said connection to the system of sewer district shall be at the sole cost and expense of city and no part of the cost of construction of sanitary sewer facilities to be constructed within the area described in Exhibit A nor any of its maintenance, repair, replacement or restoration shall be borne of paid by sewer district.

Section 4. City agrees to pay to district the sum of $ 35,633.89 as a connection charge for connecting the area described in Exhibit A to the system of the district which sum shall be paid as a condition precedent to the city making

Exhibit B
Wheeling Agreement

the connection to the sewer district sewage system. Said payment has been based upon the sewer district existing requirement for connection charges of $750 per gross acre.

In addition thereto, city will pay to sewer district a monthly sewer trunkage charge in an amount equal to forty cents ($0.40) per month for residential customer or residential equivalent (residential equivalent being computed per requirements of METRO) actually connected to and served by the facilities of City of Kirkland Sewer System within the area described in Exhibit A. City will maintain and provide records to sewer district of all customers, residential and commercial, and water flow for commercial customers so that the residential equivalent can be computed from time to time as requested by sewer district of city. Said monthly service trunkage charge shall be billed by sewer district to city from time to time but, in no event, less than annually. City agrees to report monthly to sewer district the number of residential customers or residential equivalents added to the system of city within the area described in Exhibit A for the preceding calendar month so that at all times district shall have an accurate count of residential customers or residential equivalents within the area described in Exhibit A.

Section 5. Sewer district reserves the right to provide sanitary sewer service within the sewer district boundary including those properties lying immediately west of and within the same drainage basin which could be served by way of connection into the City of Kirkland system described in Section 1 above. Said drainage basin is delineated on the map included as part

Exhibit B
Wheeling Agreement

of Exhibit A. The City of Kirkland may likewise provide sewer services by way of connection into the sewer facilities described in Section 1 to those properties within the same drainage basin which are within the City of Kirkland provided that if services provided to property within the City of Kirkland by connection to a system that ultimately connects to the sewer district sewer system, then the property to be served must be real property included on Exhibit A and for which the connection charge has been computed and paid as provided for in Section 4. City may not provide sewer service to any real property, or residential equivalent customers whose sewage will flow into the sewer district's system unless said property is located on and a part of the real property described in Exhibit A, and connection fees have been paid as provided in Section 4 hereof. It is recognized that sewer district has a vested interest in limiting and defining the flow that will enter sewer district system in that district has to reserve capacity for other areas of sewer district that will not hereafter require sewer service by connecting to the sewer service of district that is providing services to city pursuant to this agreement.

Section 6. Neither party shall by virtue of this agreement acquire any proprietary or governmental interest in the sewage system or sewerline of the other party. Each party shall be solely responsible for the operation, maintenance, restoration and replacement of its own system of sewers.

Section 7. No waiver by either party of any term or condition of this agreement shall be deemed or construed as a waiver of any other term or condition.

Exhibit B
Wheeling Agreement

Section 8. : .h party agrees and decla: that this agreement is a valid exercise of the mutual assistance and interlocal governmental cooperation authority granted to the respective parties under the laws of the State of Washington, and to that end each of the parties agrees to defend and support this agreement as being for the benefit of the health, safety, and general welfare of the general public, and each party further agrees to cooperate with the other party with respect to any appearance which may be required by either party in any proceeding before any other governmental agency.

Section 9. This agreement may be terminated by either party giving twelve (12) months notice to the other party of intent to terminate this agreement whereupon the termination date shall be upon expiration of twelve (12) months from date of receipt of said notice. In the event of termination under this paragraph, all costs of disconnection and replacement and restoration shall be paid by city.

THIS AGREEMENT signed this 21 day of NOVEMBER, 1979.

NORTHEAST LAKE WASHINGTON SEWER
DISTRICT OF KING COUNTY, WASHINGTON

BY _____
President, Board of Commissioners

BY _____
Secretary, Board of Commissioners

CITY OF KIRKLAND

BY _____

The execution of this agreement approved on behalf of Northeast Lake Washington Sewer District by resolution of its Board of Commissioners, adopted the _____ day of _____, 197___, and authorized by the City of Kirkland by Resolution No. R-2655 of the Kirkland City Council adopted the 17th day of September, 1979.

-6-

Exhibit B
Wheeling Agreement

RESOLUTION NO. R - 2655

A RESOLUTION OF THE CITY COUNCIL OF THE CITY OF KIRKLAND AUTHORIZING THE MAYOR TO SIGN ON BEHALF OF THE CITY OF KIRKLAND A CERTAIN AGREEMENT BETWEEN THE CITY OF KIRKLAND AND NORTHEAST LAKE WASHINGTON SEWER DISTRICT RELATING TO SANITARY SEWER FACILITIES WITHIN THE NORTH KIRKLAND IMPROVEMENT PROJECT AREA (L.I.D. NO. 115).

WHEREAS, a portion of the area lying within the North Kirkland Improvement Project (L.I.D. No. 115) as described in the agreement between the City of Kirkland and the Northeast Lake Washington Sewer District, a copy of which is attached to the original of this Resolution and by this reference incorporated herein, lies within the City of Kirkland and the sewer service area of the City of Kirkland's Sanitary Sewer System; and

WHEREAS, said area is not presently connected to the Kirkland Sanitary Sewer System, and because of the topography of the area, cannot readily be so connected; and

WHEREAS, the service area and corporate boundaries of the Northeast Lake Washington Sewer District lie adjacent to said area, said area can conveniently connect into the existing Northeast Lake Washington Sewer facilities; and

WHEREAS, both the City and sewer district are authorized by State law to enter into intergovernmental cooperative agreements;

NOW, THEREFORE, BE IT RESOLVED by the City Council of the City of Kirkland as follows:

Section 1. The Mayor is hereby authorized and directed to sign on behalf of the City of Kirkland that certain agreement, a copy of which is attached to the original of this Resolution and by this reference incorporated herein. Said agreement permits the City of Kirkland to connect a portion of the Kirkland Sanitary Sewer System, constructed within the area described in said agreement, and lying within the North Kirkland Improvement Project area (L.I.D. No. 115), into the existing Northeast Lake Washington Sewer System facility in the vicinity of 116th Avenue N.E. and N.E. 124th Street.

Section 2. Said agreement shall become effective upon its being properly signed by both the City of Kirkland, as herein authorized, and by the Northeast Lake Washington Sewer District.

Exhibit B
Wheeling Agreement

PASSED by majority vote of the Kirkland City Council in regular meeting on the 17th day of September, 1979.

SIGNED IN AUTHENTICATION thereof on the 17th day of September, 1979.

MAYOR

ATTEST:

Director of Administration & Finance
(ex officio City Clerk)

I hereby certify that the foregoing is a true and correct copy of a Resolution of the City of Kirkland and that the same was published or posted according to law, said Resolution being R-2655 and entitled "A Resolution as above

Deputy City Clerk

R-2655

Exhibit B
Wheeling Agreement

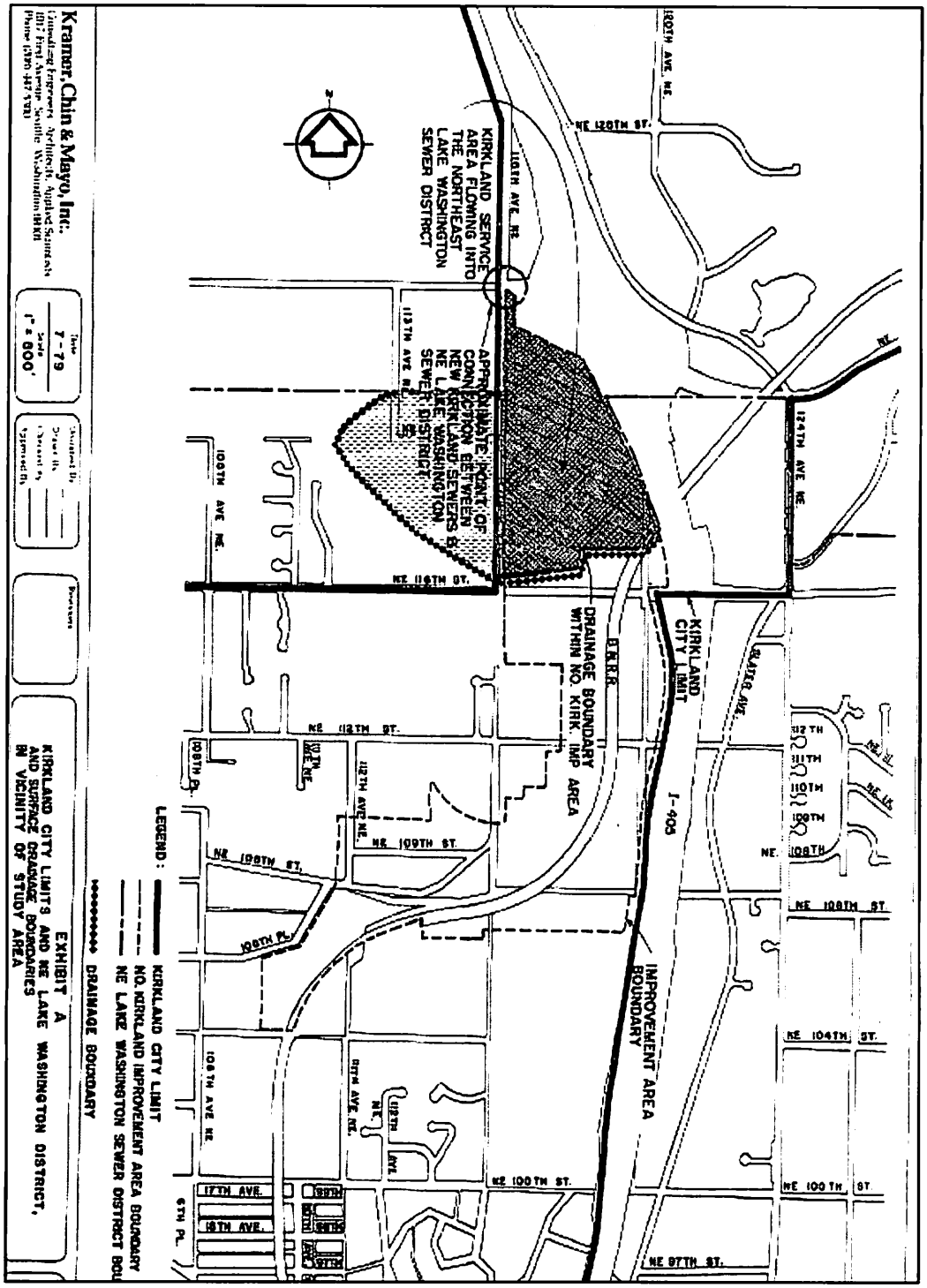

2001 083

Northshore Utility Dist OFFICIAL FILE

ADDRESS

6830 NE 185th Street
Kenmore, WA 98028-2701

P.O. Box 82489
Kenmore, WA 98028-0489

TELEPHONES

Engineering: (425)398-4401
Administration: (425)398-4402
Operations: (425)398-4403
Information: (425)398-4400

FAX NUMBERS

Engineering: (425)398-4435
Administration: (425)398-4430
Operations: (425)398-4432
Purchasing: (425)398-4434

Website: Http://www.nud.net

RECEIVED
APR - 9 2001
KIRKLAND CITY ATTORNEY'S OFFICE

COPY

April 5, 2001

City of Kirkland
City Hall
123 Fifth Avenue
Kirkland, WA 98033-6189

Attention: Bill Evans, Assistant City Attorney

Subject: Acceptance of Franchise

Dear Mr. Evans,

Please accept this letter as written acceptance of the Franchise Agreement between the City of Kirkland and Northshore Utility District. The City of Kirkland Ordinance number is 3767.

I have attached Resolution No. 2000-11-20 of Northshore Utility District approving the Franchise Agreement with the City of Kirkland. This resolution, passed on November 20th, 2000, approves the franchise (and the terms therein) and authorizes the General Manager to sign it and deliver it to the City of Kirkland for their approval. Given that there was no signature block for the District, we simply handled this last November by phone and email, noting our Board action approving the Franchise. This letter confirms those communications.

As requested, and in accordance with Section 15 of the Franchise, the Washington Government Entity Pool faxed written evidence of our insurance to you earlier this week. I have also provided a copy of that confirmation here.

Sincerely,

R. Daniel Olson, P.E.
General Manager

Attachments: NUD Resolution 2000-11-20
Written confirmation of insurance from WGEP

Accept Kirkland Franchise 2001

Accountable Management - Responsible Usage

NORTHSHORE UTILITY DISTRICT
KING COUNTY, WASHINGTON

Resolution No. 2000-11-20

A RESOLUTION of Northshore Utility District Approving Franchise Agreement with the City of Kirkland.

Background

1. The District owns and operates certain facilities within the roads and rights-of-way located within the City of Kirkland.

2. The District previously operated these facilities under the authority of a franchise from King County. That franchise has expired and the roads and rights-of-way in which the facilities are located are now under the jurisdiction of the City of Kirkland.

3. The District staff has negotiated with the City of Kirkland for a Franchise Agreement for the District's continued operation of facilities within the City of Kirkland's roads and rights-of-way, a copy of which is attached hereto.

4. The District staff recommends the Board of Commissioners approve the Franchise Agreement and authorize the General Manager to sign it and deliver it to the City of Kirkland for their approval.

Now it is resolved that:

Action

5. The Board of Commissioners approves the Franchise Agreement and authorizes the General Manager to sign it and deliver it to the City of Kirkland for their approval.

ADOPTED by the Board of Commissioners of Northshore Utility District at an open public meeting held on NOV 20 2000.

Commissioner

Commissioner

Commissioner

Commissioner

Commissioner

FILE

EVIDENCE OF COVERAGE

WASHINGTON GOVERNMENTAL ENTITY POOL
P.O. BOX 19330, Spokane, WA 99219
Tel. 800-462-8418 or 509/838-0910
Fax 509/747-3875

INSURED / PARTICIPANT
Northshore Utility District
6830 NE 185th
Kenmore, Washington 98028-2701

CERTIFICATE HOLDER
City of Kirkland
123 Fifth Avenue
Kirkland, Washington 98033-6189

Post-it® Fax Note 7671	Date 4-6-01	# of pages ▸ 1
To FANNY VEE	From KATHY	
Co./Dept. NORTHSHORE UTILITY	Co. WGEP	
Phone #	Phone # 8004628418	
Fax # 425.398.4430	Fax # 509 747 3875	

This is to certify that the policies of insurance and memorandum of coverage listed below have been issued to the insured named above for the policy period indicated, notwithstanding any requirement, term or condition of any contract or other document with respect to which this certificate may be issued or may pertain, the coverage afforded by the policies and memorandum of coverage described herein is subject to all terms, exclusions and conditions of such policies.

EFFECTIVE DATE: September 1, 2000 **EXPIRATION DATE:** August 31, 2001

COVERAGE	LIMIT	
Comprehensive General Liability/Auto Liability		
Washington Governmental Entity Pool	$ 250,000	Self-Insured Retention
Company: NPX Program	$ 20,000,000	Per Occurrence
	None	Aggregate
		Member Deductible Applies
Employment Practice Liability		
Washington Governmental Entity Pool	$ 250,000	Self-Insured Retention
Company: NPX Program	$ 20,000,000	Per Occurrence
	$ 20,250,000	Aggregate
		Member Deductible Applies
Public Officials Liability		
Washington Governmental Entity Pool	$ 250,000	Self-Insured Retention
Company: NPX Program	$ 20,000,000	Per Occurrence
	$ 20,250,000	Aggregate
		Member Deductible Applies
Property / Mobile Equipment		
Washington Governmental Entity Pool		Property on File with WGEP
Company: NPX Program		Member Deductible Applies
Automobile Physical Damage		
Washington Governmental Entity Pool		Per Schedule on File with WGEP
Boiler and Machinery		
Washington Governmental Entity Pool		Limits on File with WGEP
Company: NPX Program		Member Deductible Applies
Employee Dishonest Bond		
Washington Governmental Entity Pool		Per Schedule on File with WGEP

Certificate holder is to be shown as additional insured in respects to the Franchise Agreement (Section 15) between the City of Kirkland and Northshore Utility District.

EOC-2001

Authorized Representative
DATE: Wednesday, April 04, 2001

N:\WINWORD\Kathy\Evidence of Coverage\Northshore Utility District\City of Kirkland-2001.doc

#2001083
Northshore Utility District

OFFICIAL FILE COPY

ORDINANCE 3767

AN ORDINANCE OF THE CITY OF KIRKLAND GRANTING NORTHSHORE UTILITY DISTRICT, A WASHINGTON MUNICIPAL CORPORATION, THE RIGHT, PRIVILEGE, AUTHORITY AND FRANCHISE TO CONSTRUCT AND MAINTAIN, REPAIR, REPLACE, OPERATE UPON, OVER, UNDER, ALONG AND ACROSS THE FRANCHISE AREA FOR PURPOSES OF ITS WATER & SEWER UTILITY BUSINESS.

WHEREAS, pursuant to Resolution R-4223 the City Council authorized the City Manager to negotiate a franchise agreement with the Northshore Utility District ("NUD"); and

WHEREAS, NUD and the City have successfully negotiated such an agreement;

NOW THEREFORE, City Council of the City of Kirkland do ordain as follows:

Section 1. Definitions. Where used in this franchise (the "Franchise") these terms have the following meanings:

(a) "NUD" means Northshore Utility District, a Washington municipal corporation, and its respective successors and assigns.

(b) "City" means the City of Kirkland, a municipal corporation of the State of Washington, and its respective successors and assigns.

(c) "Franchise Area" means any, every and all of the roads, streets, avenues, alleys, highways, rights-of-way and unrestricted utility easements of the City as now laid out, platted, dedicated or improved; and any, every and all roads, streets, avenues, alleys, highways and rights-of-way that may hereafter be laid out, platted, dedicated or improved within the present limits of the City and as such limits may be hereafter extended.

(d) "Facilities" means tanks, meters, pipes, mains, services, valves, manholes, pressure reducing valves ("PRVs"), pump stations, meter stations, lines, and all necessary or convenient facilities and appurtenances thereto, whether the same be located over or under ground.

(e) "Ordinance" means this Ordinance No. 3767, which sets forth the terms and conditions of this Franchise.

(f) "Revenues" means the value proceeding or accruing from the performance of NUD's water and sewer business, including operations incidental thereto, but without any deduction on account of the cost of the commodity furnished or sold, the cost of materials used, labor costs, interest, delivery costs, taxes, or any other expense paid or accrued and without any deduction on account of losses; provided that it shall not include late fees, impact or mitigation fees, or connection charges.

Section 2. Franchise.

A. Facilities within Franchise Area. The City does hereby grant to NUD the right, privilege, authority and franchise to:

(a) Construct, support, attach, and connect Facilities between, maintain, repair, replace, enlarge, operate and use Facilities in, upon, over, under, along, through and across the Franchise Area for purposes of its water and sewer utility business as defined in RCW 82.04.065.

B. Permission Required to Enter Onto Other City Property. Nothing contained in this Ordinance is to be construed as granting permission to NUD to go upon any other public place other than those types of public places specifically designated as the Franchise Area in this Ordinance. Permission to go upon any other property owned or controlled by the City must be sought on a case-by-case basis from the City.

C. Compliance with Laws and Regulations. At all times during the term of this Franchise, NUD shall fully comply with all applicable federal, state, and local laws and regulations.

Section 3. Non-interference of Facilities.

NUD's Facilities shall be located, relocated and maintained within the Franchise Area so as not to unreasonably interfere with the free and safe passage of pedestrian and vehicular traffic and ingress or egress to or from the abutting property and in accordance with the laws of the State of Washington. Nothing herein shall preclude NUD from effecting temporary road closures as reasonably necessary during construction or maintenance of its Facilities

provided NUD receives prior City approval, which shall not be unreasonably withheld. Whenever it is necessary for NUD, in the exercise of its rights under this Franchise, to make any excavation in the Franchise Area, NUD shall, upon completion of such excavation, restore the surface of the Franchise Area to the specifications established within the City of Kirkland Public Works Policies and pre-approved plans and in accordance with standards of general applicability imposed by the City by ordinance, administrative order; provided, however, if the surface of the affected Franchise Area has an Overall Condition Index (OCI)* rating of 40 or less prior to NUD's excavation, then the area shall be restored with a permanent asphalt patch per City of Kirkland Pre-approved Plans in lieu of an asphalt street overlay.

If NUD should fail to leave any portion of any Franchise Area so excavated in a condition that meets the City's specifications per the Public Works Policies and Standards, then, subject to the foregoing sentence, the City may after notice of not less than five (5) days to NUD, which notice shall not be required in case of an emergency, order any and all work considered necessary to restore to a safe condition that portion of the Franchise Area so excavated, and NUD shall pay to the City the reasonable cost of such work; which shall include among other things the overhead expense of the City in obtaining completion of said work. The parties agree that this provision may be renegotiated upon the request of either party.

*The City of Kirkland's Overall Condition Index (OCI) rating is based upon standard pavement condition rating methodologies as recognized by the Washington State Department of Transportation (WSDOT) and the Northwest Pavement Managers Association (NWPMA).

B. Any surface or subsurface failure occurring during the term of this Agreement and caused by any excavation by NUD shall be repaired to the City's specifications, within fifteen (15) days or upon five (5) days written notice to NUD by the City; if NUD fails to so timely repair, then the City shall order all work necessary to restore the damaged area to a safe and acceptable condition and NUD shall pay the reasonable costs of such work to the City.

Section 4. Relocation of Facilities.

A. Whenever the City causes the grading or widening of the Franchise Area or undertakes construction of any water, sanitary sewer or storm drainage line, lighting, signalization, sidewalk improvement, pedestrian amenities, or other public street improvement (for purposes other than those described in section 4[B] below) and such project requires the relocation of NUD's then existing Facilities within the Franchise Area, the City shall:

(a) Provide NUD, at least ninety (90) days prior to the commencement of such project, written notice that a project is expected to require relocation; and

(b) Provide NUD with reasonable plans and specifications for such grading, widening, or construction and a proposed new location within the Franchise Area for NUD's Facilities.

After receipt of such notice and such plans and specifications, NUD shall relocate such Facilities within the Franchise Area so as to accommodate such street and utility improvement project; provided, however, NUD may, after receipt of written notice requesting a relocation of its Facilities, submit to the City written alternatives to such relocations. The City shall within a reasonable time evaluate such alternatives and advise NUD in writing whether one or more of the alternatives is suitable to accommodate work that would otherwise necessitate relocation of the Facilities. If so requested by the City, NUD shall submit such additional information as is reasonably necessary to assist the City in making such evaluation. The City shall give each alternative full and fair consideration. In the event the City ultimately reasonably determines that there is no other reasonable or feasible alternative, then NUD shall relocate its Facilities as otherwise provided in this Section 4. The City shall cooperate with NUD to designate a substitute location for its Facilities within the Franchise Area. City will establish a date by which Facilities will be relocated, which date will be not less than sixty (60) days after written notice to NUD as to the facility to be relocated. NUD must finish relocation of each such Facility by the date so established. The cost of relocating such Facilities existing within the present limits of the City shall be paid as follows:

(a) if the relocation occurs within six (6) years after NUD initially constructed such Facility, then the relocation shall be at the City's sole cost;

(b) if the relocation occurs more than six (6) years but within ten (10) years after NUD initially constructed such Facility, then the City shall pay fifty percent (50%) of the cost of such relocation and NUD shall pay the remaining fifty percent (50%); and

(c) if the relocation occurs more than ten (10) years after NUD initially constructed such Facility, then the relocation shall be at NUD's sole cost.

(d) For the purpose of planning, NUD and the City shall provide each other with a copy of their respective current adopted Capital Improvement Plan annually and upon request by the other party.

B. Whenever any person or entity, other than the City, requires the relocation of NUD's Facilities to accommodate the work of such person or

entity within the Franchise Area, or whenever the City requires the relocation of NUD's Facilities within the Franchise Area for the benefit of any person or entity other than the City, then NUD shall have the right as a condition of such relocation to require such person or entity to:

(a) make payment to NUD at a time and upon terms acceptable to NUD for any and all costs and expense incurred by NUD in the relocation of NUD's Facilities; and

(b) protect, defend, indemnify and save NUD harmless from any and all claims and demands made against it on account of injury or damage to the person or property of another arising out of or in conjunction with the relocation of NUD's Facilities, to the extent such injury or damage is caused by the negligence or willful misconduct of the person or entity requesting the relocation of NUD's Facilities or other negligence or willful misconduct of the agents, servants or employees of the person or entity requesting the relocation of NUD's Facilities.

C. Any condition or requirement imposed by the City upon any person or entity (including, without limitation, any condition or requirement imposed pursuant to any contract or in conjunction with approvals or permits for zoning, land use, construction or development) which necessitates the relocation of NUD's Facilities within the Franchise Area shall be subject to the provisions of subsection 4(B). However, in the event the City reasonably determines (and promptly notifies NUD in writing of such determination) that the primary purpose of imposing such condition or requirement upon such person or entity which necessitates such relocation is to cause the construction of an improvement on the City's behalf and in a manner consistent with City approved improvement plans (as described in 4[A] above) within a segment of the Franchise Area then:

NUD shall require only those costs and expenses incurred by NUD in integrating and connecting such relocated Facilities with NUD's other Facilities to be paid to NUD by such person or entity, and NUD shall otherwise relocate its Facilities within such segment of the Franchise Area in accordance with the provisions of subsection 4(A) above.

The provisions of this Section 4(C) shall in no manner preclude or restrict NUD from making any arrangements it may deem appropriate when responding to a request for relocation of its Facilities by any person or entity other than the City, where the facilities to be constructed by such person or entity are not or will not become City owned, operated or maintained facilities, provided that such arrangements do not unduly delay a City construction project.

D. This Section 4 shall govern all relocations of NUD's Facilities required in accordance with this Franchise. Any cost or expense in connection with the location or relocation of any Facilities existing under benefit of easement or other rights not arising under this Franchise, excluding rights arising under any prior King County franchise, shall be borne fifty percent (50%) by NUD and fifty percent (50%) by the City. Costs for location or relocation of any Facilities existing under any prior King County franchise shall be borne solely by NUD.

E. NUD recognizes the need for the City to maintain adequate width for installation and maintenance of City owned utilities such as, but not limited to, sanitary sewer, water, storm drainage and telecommunication facilities. Thus, the City reserves the right to maintain reasonable clear zones within the public right-of-way for installation and maintenance of said utilities. The clear zones for each right-of-way segment shall be noted and conditioned with the issuance of each right-of-way permit. If adequate clear zones are unable to be achieved on a particular right-of-way, NUD shall locate in an alternate right-of-way, obtain easements from private property owners, or propose alternate construction methods which maintain and/or enhance the existing clear zones.

Section 5. Indemnification. NUD shall indemnify, defend and hold the City, its agents, officers, employees, volunteers and assigns harmless from and against any and all claims, demands, liability, loss, cost, damage or expense of any nature whatsoever, including all costs and attorney's fees, made against them on account of injury, sickness, death or damage to persons or property which is caused by or arises out of, in whole or in part, the willful, tortious or negligent acts, failures and/or omissions of NUD or its agents, servants, employees, contractors, subcontractors or assigns in the construction, operation or maintenance of its Facilities or in exercising the rights granted NUD in this Franchise; provided, however, such indemnification shall not extend to injury or damage caused by the negligence or willful misconduct of the City, its agents, officers, employees, volunteers or assigns.

In the event any such claim or demand be presented to or filed with the City, the City shall promptly notify NUD thereof, and NUD shall have the right, at its election and at its sole cost and expense, to settle and compromise such claim or demand, provided further, that in the event any suit or action be begun against the City based upon any such claim or demand, the City shall likewise promptly notify NUD thereof, and NUD shall have the right, at its election and its sole cost and expense, to settle and compromise such suit or action, or defend the same at its sole cost and expense, by attorneys of its own election.

Section 6. Default. If NUD shall fail to comply with any of the provisions of this Franchise, unless otherwise provided for herein, the City may serve upon NUD a written order to so comply within thirty (30) days from the date such order is received by NUD. If NUD is not in compliance with this Franchise after expiration of said thirty (30) day period, the City may act to remedy the violation and may charge the costs and expenses of such action to NUD. The City may act without the thirty (30) day notice in case of an emergency. The City may in addition, by ordinance adopted no sooner than five (5) days after notice of the City Council hearing (at which NUD will have an opportunity to be heard) on the impending ordinance is given to NUD, declare an immediate forfeiture of this Franchise, provided, however, if any material failure to comply with this Franchise by NUD cannot be corrected with due diligence within said thirty (30) day period (NUD's obligation to comply and to proceed with due diligence being subject to unavoidable delays and events beyond its control, in which case the time within which NUD may so comply shall be extended for such time as may be reasonably necessary and so long as NUD commences promptly and diligently to effect such compliance), provided good faith dispute does not exist concerning such compliance.

In addition to other remedies provided herein, if NUD is not in compliance with requirements of the Franchise, and if a good faith dispute does not exist concerning such compliance, the City may place a moratorium on issuance of pending NUD right-of-way use permits until compliance is achieved.

Section 7. Non-exclusive Franchise. This Franchise is not and shall not be deemed to be an exclusive Franchise. This Franchise shall not in any manner prohibit the City from granting other and further franchises over, upon, and along the Franchise Area which do not interfere with NUD's rights under this Franchise. This Franchise shall not prohibit or prevent the City from using the Franchise Area or affect the jurisdiction of the City over the same or any part thereof.

Section 8. Franchise Term. Subject to the provisions of Section 9 below, this Franchise is and shall remain in full force and effect for a period of ten (10) years from and after January 1, 2001, provided that on January 1, 2006, and on January 1 every five (5) years thereafter, the term shall automatically be extended for an additional five (5) years, unless either NUD or the City gives the other party written notice of non-renewal prior to any such renewal date, in which case this Franchise shall terminate five (5) years after such renewal date; and provided further, however, NUD shall have no rights under this Franchise nor shall NUD be bound by the terms and conditions of this Franchise unless NUD shall, within thirty (30) days after the effective date of the Ordinance, file with the City its written acceptance of this Franchise, in a form acceptable to the City Attorney.

Section 9. Non-assumption. In consideration for the franchise fee and acceptance of the other terms and conditions of this Franchise, the City agrees that it will not exercise its statutory authority (RCW Chapter 35.13A as currently written) to assume jurisdiction over NUD or any NUD responsibilities, property, facilities or equipment within the City's corporate limits, including future annexed areas, for a minimum of ten (10) years from the date NUD files its written acceptance pursuant to Section 8 above or within (5) five years of annexation to the extent of the City's current planning area (which extends approximately to 145th Street), whichever is later.

Section 10. Franchise fee. In consideration for the rights granted NUD under this Agreement for existing sewer and water lines in the Franchise Area, NUD agrees to pay to the City a franchise fee equal to five percent (5%) of NUD's Revenues collected from NUD's customers with billing addresses that are within the corporate boundaries of the City. Fees for each calendar quarter shall be due thirty (30) days following the end of the calendar quarter. Should NUD be prevented by judicial or legislative action from collecting a franchise fee on all or a part of the Revenues, NUD shall be excused from the collection and distribution of that portion of the franchise fee. Should a court of competent jurisdiction declare, or a change in law make the franchise fee to be collected on behalf of the City invalid, in whole or in part, or should a court of competent jurisdiction hold that the collection of the franchise fee by NUD is in violation of a pre-existing contractual obligation of NUD, then NUD's obligation to collect and distribute a franchise fee to the City under this Section shall be terminated in accordance with and to the degree required to comply with such court action. NUD agrees that the franchise fee established by this Section is appropriate and that NUD will not be a party to or otherwise support legal or legislative action intended to result in judicial determinations or legislative action referred to above. City shall defend, indemnify and hold NUD harmless from and against any and all claims, suits, actions or liabilities (including costs and attorneys' fees) incurred or asserted against NUD directly or indirectly arising out of NUD's collection of the franchise fee as provided in this Franchise.

Section 11. Compliance with codes and regulations.

A. The rights, privileges and authority herein granted are subject to and governed by this ordinance and all other applicable ordinances and codes of the City of Kirkland, as they now exist or may hereafter be amended. Nothing in this ordinance limits the City's lawful power to exercise its police power to protect the safety and welfare of the general public. Any location, relocation, erection or excavation by NUD shall be performed by NUD in accordance with applicable federal, state and city rules and regulations, including the City Public Works Policies and Pre-approved Plans, and any

required permits, licenses or fees, and applicable safety standards then in effect or any Memorandum of Understanding with NUD.

B. Upon written inquiry, NUD shall provide a specific reference to either the federal, state or local law or the Washington Utilities and Transportation Commission ("WUTC") order or action establishing a basis for NUD's actions related to a specific franchise issue.

C. In the event that any territory served by NUD is annexed to the City after the effective date of this Franchise, such territory shall be governed by the terms and conditions contained herein upon the effective date of such annexation.

Section 12. Location of Facilities and Equipment. All Facilities and equipment to be installed within the Franchise Area shall be installed underground; provided, however, that such Facilities may be installed above ground if so authorized by the City, which authorization shall not be unreasonably withheld, conditioned or delayed, consistent with the provisions of the City's Land Use Code and applicable development pre-approved plans.

Section 13. Record of Installations and Service. With respect to excavations by NUD and the City within the Franchise Area, NUD and the City shall each comply with its respective obligations pursuant to Chapter 19.122, RCW and any other applicable state law.

Upon written request of the City, NUD shall provide the City with the most recent update available of any plan of potential improvements to its Facilities within the Franchise Area; provided, however, any such plan so submitted shall be for informational purposes within the Franchise Area, nor shall such plan be construed as a proposal to undertake any specific improvements within the Franchise Area.

As built drawings of the precise location of any Facilities placed by NUD in any street, alley, avenue, highway, easement, etc., shall be made available to the City within ten (10) working days of request.

Section 14. Shared Use of Excavations. NUD and the City shall exercise best efforts to coordinate construction work either may undertake within the Franchise Area so as to promote the orderly and expeditious performance and completion of such work as a whole. Such efforts shall include, at a minimum, reasonable and diligent efforts to keep the other party and other utilities within the Franchise Areas informed of its intent to undertake such construction work. NUD and the City shall further exercise best efforts to minimize any delay or hindrance to any construction work undertaken by themselves or other utilities within the Franchise Area.

If at any time, or from time to time, either NUD, the City, or another franchisee, shall cause excavations to be made within the Franchise Area, the party causing such excavation to be made shall afford the others, upon receipt of a written request to do so, an opportunity to use such excavation, provided that:

(a) Such joint use shall not unreasonably delay the work of the party causing the excavation to be made;

(b) Such joint use shall be arranged and accomplished on terms and conditions satisfactory to both parties. The parties shall each cooperate with other utilities in the Franchise Area to minimize hindrance or delay in construction.

The City reserves the right to not allow open trenching for five (5) years following a street overlay or improvement project. NUD shall be given written notice at least ninety (90) days prior to the commencement of the project. Required trenching due to an emergency will not be subject to five (5) year street trenching moratoriums.

The City reserves the right to require NUD to joint trench with other facilities if both parties are anticipating trenching within the same portion of the Franchise Area and provided that the terms of (a) and (b) above are met.

Section 15. Insurance. NUD shall maintain in full force and effect throughout the term of this Franchise, a minimum of One Million Dollars ($1,000,000.00) liability insurance for property damage and bodily injury.

The City shall be named as an additional insured on any policy of liability insurance obtained by NUD for the purpose of complying with the requirements of this Section.

In satisfying the insurance requirement set forth in this section, NUD may self-insure against such risks in such amounts as are consistent with good utility practice. NUD shall provide the City with sufficient written evidence, the sufficiency of which shall be determined at the reasonable discretion of the City, upon request, that such insurance (or self-insurance) in being so maintained by NUD. Such written evidence shall include, to the extent available from NUD's insurance carrier, a written certificate of insurance with respect to any insurance maintained by NUD in compliance with this Section.

Section 16. Tariff Changes. If NUD shall file, pursuant to Chapter 80.28 RCW, with the WUTC (or its successor) any tariff affecting the City's

rights arising under this Franchise, NUD shall give the City Clerk written notice thereof within five (5) days of the date of such filing.

Section 17. Assignment. All of the provisions, conditions, and requirements herein contained shall be binding upon NUD, and no right, privilege, license or authorization granted to NUD hereunder may be assigned or otherwise transferred without the prior written authorization and approval of the City, which the City may not unreasonably withhold, condition or delay. Notwithstanding the foregoing, NUD may assign this agreement to an affiliate, parent or subsidiary or as part of any corporate financing, reorganization or refinancing which does not require assignment to any but an affiliate, parent or subsidiary without the consent of, but upon notice to, the City.

Section18. Notice. Unless applicable law requires a different method of giving notice, any and all notices, demands or other communications required or desired to be given hereunder by any party (collectively, "notices") shall be in writing and shall be validly given or made to another party if delivered either personally or by Federal Express or other overnight delivery service of recognized standing, or if deposited in the United States Mail, certified, registered, or express mail with postage prepaid, or if sent by facsimile transmission with electronic confirmation. If such notice is personally delivered, it shall be conclusively deemed given at the time of such delivery. If such notice is delivered by Federal Express or other overnight delivery service of recognized standing, it shall be deemed given one (1) business day after the deposit thereof with such delivery service. If such notice is mailed as provided herein, such shall be deemed given three (3) business days after the deposit thereof in the United States Mail. If such notice is sent by facsimile transmission, it shall be deemed given at the time of the sender's receipt of electronic confirmation. Each such notice shall be deemed given only if properly addressed to the party to whom such notice is to be given as follows:

To City: City Clerk
City of Kirkland
123 Fifth Avenue
Kirkland, WA 98033-6169
Fax: (425) 576-2921

To NUD: General Manager
Northshore Utility District
6830 NE 185th St.
Kenmore, WA 98028
Fax:(425) 398-4435

With copy to: Andrew Maron
Short Cressman & Burgess PLLC
999 Third Avenue, Suite 3000
Seattle, WA 98104-4088
Fax: (206) 340-8856

Any party hereto may change its address for the purpose of receiving notices as herein provided by a written notice given in the manner aforesaid to the other party hereto.

Section 19. Miscellaneous. If any term, provision, condition or portion of this Franchise shall be held to be invalid, such invalidity shall not affect the validity of the remaining portions of this Franchise which shall continue in full force and effect. The headings of sections and paragraphs of this Franchise are for convenience of reference only and are not intended to restrict, affect, or be of any weight in the interpretation or construction of the provisions of such sections or paragraphs.

In addition to the franchise fee due under Section 10 above, NUD shall pay for the City's reasonable administrative costs in drafting and processing this franchise agreement and all work related thereto. NUD shall further be subject to all permit fees associated with activities undertaken through the authority granted in this franchise ordinance or under the laws of the City. Where the City incurs cost and expenses for review, inspection, or supervision of activities undertaken through the authority granted in this franchise or any ordinances relating to the subject for which a permit fee is not established, NUD shall pay such costs and expenses directly to the City. In addition to the above, NUD shall promptly reimburse the City for any and all costs it reasonably incurs in response to any emergency involving NUD's facilities.

City has the right, but not the obligation, to take over control and ownership of Franchise's facilities in the Franchise Area, specifically including the water and sewer plant network, without compensation, if: (1) such facilities are abandoned; or (2) in the event this Franchise is terminated and Franchisee does not remove such facilities at its own expense within a reasonable period of time. Furthermore, the City is specifically interested in retaining abandoned water and sewer lines for use as conduit for communication purposes and NUD shall notify the City at least 180 days prior to abandonment of any water or sewer line.

This Franchise may be amended only by written instrument, signed by both parties, which specifically states that it is an amendment to this Franchise, and is approved and executed in accordance with the laws of the State of Washington. Without limiting the generality of the foregoing, this Franchise (including, without limitation, Section 5 above) shall govern and supersede and shall not be changed, modified, deleted, added to, supplemented or otherwise amended by any permit, approval, license, agreement or other document required by or obtained from the City in conjunction with the exercise (or failure to exercise) by NUD of any and all rights, benefits, privileges, obligations, or duties in and under this Franchise, unless such permit, approval, license, agreement or document specifically:

(a) references this Franchise; and

(b) states that it supersedes this Franchise to the extent it contains terms and conditions which change, modify, delete, add to, supplement or otherwise amend the terms and conditions of this Franchise.

In the event of any conflict or inconsistency between the provisions of this Franchise and the provisions of any such permit, approval, license, agreement of other document, the provisions of this Franchise shall control.

This Franchise is subject to the provisions of any applicable tariff now or hereafter on file with the WUTC or its successor. In the event of any conflict of inconsistency between the provisions of this Franchise and such tariff, the provisions of such tariff shall control.

Section 20. Effective date. This Ordinance, being in compliance with RCW 35A.47.040, shall be in force and effect five (5) days from and after its passage by the Kirkland City Council and publication pursuant to Section 1.08.017 Kirkland Municipal Code in the summary form attached to the original of this ordinance and by this reference approved by the City Council.

Passed by majority vote of the Kirkland City Council in open meeting this 11th day of December, 2000.

Signed in authentication thereof this 11th day of December, 2000.

MAYOR

Attest:

City Clerk

Approved as to Form:

City Attorney

Ord\NUD franchise agreement

PUBLICATION SUMMARY OF
ORDINANCE NO. 3767

AN ORDINANCE OF THE CITY OF KIRKLAND GRANTING NORTHSHORE UTILITY DISTRICT, A WASHINGTON MUNICIPAL CORPORATION, THE RIGHT, PRIVILEGE, AUTHORITY AND FRANCHISE TO CONSTRUCT, AND MAINTAIN, REPAIR, REPLACE, REMOVE AND OPERATE UPON, OVER, UNDER, ALONG AND ACROSS THE FRANCHISE AREA FOR PURPOSES OF ITS WATER AND SEWER UTILITY BUSINESS.

SECTIONS 1-15. Provide for: the grant to Northshore Utility District of a franchise for a water and sewer utility business for ten years on specified terms and conditions with the possibility of 5 year extensions thereafter, payment of franchise fees to the City and non-assumption of NUD facilities within Kirkland for 10 years after acceptance or 5 years after annexation, whichever is later.

SECTIONS 16-19. Set forth administrative provisions for the franchise and concerning its legal effect.

SECTION 20. Authorizes publication of the ordinance by summary, which summary is approved by the City Council pursuant to Section 1.08.017 Kirkland Municipal Code and establishes the effective date as five days after publication of summary.

The full text of this ordinance will be mailed without charge to any person upon request made to the City Clerk for the City of Kirkland. The ordinance was passed by the Kirkland City Council at its regular meeting on the 11th day of december, 2000.

I certify that the foregoing is a summary of Ordinance 3767 approved by the Kirkland City Council for summary publication.

City Clerk
Ord\NUDpubsum

RESOLUTION NO. R 2655

A RESOLUTION OF THE CITY COUNCIL OF THE CITY OF KIRKLAND AUTHORIZING THE MAYOR TO SIGN ON BEHALF OF THE CITY OF KIRKLAND A CERTAIN AGREEMENT BETWEEN THE CITY OF KIRKLAND AND NORTHEAST LAKE WASHINGTON SEWER DISTRICT RELATING TO SANITARY SEWER FACILITIES WITHIN THE NORTH KIRKLAND IMPROVEMENT PROJECT AREA (L.I.D. NO. 115).

WHEREAS, a portion of the area lying within the North Kirkland Improvement Project (L.I.D. No. 115) as described in the agreement between the City of Kirkland and the Northeast Lake Washington Sewer District, a copy of which is attached to the original of this Resolution and by this reference incorporated herein, lies within the City of Kirkland and the sewer service area of the City of Kirkland's Sanitary Sewer System; and

WHEREAS, said area is not presently connected to the Kirkland Sanitary Sewer System, and because of the topography of the area, cannot readily be so connected; and

WHEREAS, the service area and corporate boundaries of the Northeast Lake Washington Sewer District lie adjacent to said area, said area can conveniently connect into the existing Northeast Lake Washington Sewer facilities; and

WHEREAS, both the City and sewer district are authorized by State law to enter into intergovernmental cooperative agreements;

NOW, THEREFORE, BE IT RESOLVED by the City Council of the City of Kirkland as follows:

Section 1. The Mayor is hereby authorized and directed to sign on behalf of the City of Kirkland that certain agreement, a copy of which is attached to the original of this Resolution and by this reference incorporated herein. Said agreement permits the City of Kirkland to connect a portion of the Kirkland Sanitary Sewer System, constructed within the area described in said agreement, and lying within the North Kirkland Improvement Project area (L.I.D. No. 115), into the existing Northeast Lake Washington Sewer System facility in the vicinity of 116th Avenue N.E. and N.E. 124th Street.

Section 2. Said agreement shall become effective upon its being properly signed by both the City of Kirkland, as herein authorized, and by the Northeast Lake Washington Sewer District.

AGREEMENT

THIS AGREEMENT made and entered into this day, by and between the City of Kirkland, an optional code city, hereafter referred to as "city"; and Northeast Lake Washington Sewer District of King County, Washington, a municipal corporation, hereinafter sometimes referred to as "sewer district".

W I T N E S S E T H

WHEREAS, both city and sewer district are authorized by state law to enter into cooperative agreements, and

WHEREAS, the area described and designated on Exhibit A, attached hereto and by this referenced incorporated in full herein, as subject area lies within the City of Kirkland and the sewer service area of the City of Kirkland Sanitary Sewer System, and

WHEREAS, the North Kirkland Improvement Project (L.I.D. 115) includes the installation of sanitary sewer service facilities within said subject area, and

WHEREAS, said area is not presently connected to the existing Kirkland Sanitary Sewer System, and because of the topography of the area may not readily be so connected, and

WHEREAS, the service area and corporate boundaries of Northeast Lake Washington Sewer District lie adjacent to subject area, and subject area can conveniently connect into the existing Northeast Lake Washington Sewer System facilities, and

WHEREAS, both parties are desirous where possible and convenient to mutually assist one another under terms and conditions as set forth herein, now, therefore,

IN CONSIDERATION of the agreements herein contained, it is agreed as follows:

Section 1. All sanitary sewer facilities to be constructed within the subject area as a part of or in connection with Local Improvement District No. 115, and the North Kirkland Improvement Project (which facilities are described and designated on Exhibit A, as attached hereto, and by this reference incorporated herein), shall upon construction and acceptance become for all purposes including customer service charges and maintenance, part of the Kirkland Sanitary Sewer System, but may nevertheless, be connected into the Northeast Lake Washington Sewer District sanitary sewer trunkage facilities at the point or points so designated as "connection point" on Exhibit A. Prior to making connection, city shall notify sewer district of the intended date of connection so that sewer district may cause its engineers to be physically present and to inspect and approve the connection to the sewer district's system. All costs of making said connection in complying with all federal, state and other applicable regulatory agency requirements shall be at the sole cost and expense of city.

Section 2. Sewer district agrees to accept sewage only from the area described in Exhibit A entering into its system

through said designated connection point and agrees to convey the same through its system to its connection with the municipality of Metropolitan Seattle System. The providing of this service by sewer district to city shall be subject to all requirements, rules and regulations of the municipality of Metropolitan Seattle (METRO), and agrees to pay all fees due METRO with respect to the sewage entering sewer district's system. Should it hereafter be claimed or asserted by sewer district or METRO that there are excessive flows due to infiltration or other reasons from the area described in Exhibit A resulting in increased METRO charges to sewer district, then city agrees to install a metering device to measure the flow entering district's system at the connection points.

Section 3. It is acknowledged that city has designed and constructed the sewer system within Exhibit A and that all costs of construction and of said connection to the system of sewer district shall be at the sole cost and expense of city and no part of the cost of construction of sanitary sewer facilities to be constructed within the area described in Exhibit A nor any of its maintenance, repair, replacement or restoration shall be borne of paid by sewer district.

Section 4. City agrees to pay to district the sum of $35,633.89 as a connection charge for connecting the area described in Exhibit A to the system of the district which sum shall be paid as a condition precedent to the city making

the connection to the sewer district sewage system. Said payment has been based upon the sewer district existing requirement for connection charges of $750 per gross acre.

In addition thereto, city will pay to sewer district a monthly sewer trunkage charge in an amount equal to forty cents ($0.40) per month for residential customer or residential equivalent (residential equivalent being computed per requirements of METRO) actually connected to and served by the facilities of City of Kirkland Sewer System within the area described in Exhibit A. City will maintain and provide records to sewer district of all customers, residential and commercial, and water flow for commercial customers so that the residential equivalent can be computed from time to time as requested by sewer district of city. Said monthly service trunkage charge shall be billed by sewer district to city from time to time but, in no event, less than annually. City agrees to report monthly to sewer district the number of residential customers or residential equivalents added to the system of city within the area described in Exhibit A for the preceding calendar month so that at all times district shall have an accurate count of residential customers or residential equivalents within the area described in Exhibit A.

Section 5. Sewer district reserves the right to provide sanitary sewer service within the sewer district boundary including those properties lying immediately west of and within the same drainage basin which could be served by way of connection into the City of Kirkland system described in Section 1 above. Said drainage basin is delineated on the map included as part

of Exhibit A. The City of Kirkland may likewise provide sewer services by way of connection into the sewer facilities described in Section 1 to those properties within the same drainage basin which are within the City of Kirkland provided that if services provided to property within the City of Kirkland by connection to a system that ultimately connects to the sewer district sewer system, then the property to be served must be real property included on Exhibit A and for which the connection charge has been computed and paid as provided for in Section 4. City may not provide sewer service to any real property, or residential equivalent customers whose sewage will flow into the sewer district's system unless said property is located on and a part of the real property described in Exhibit A, and connection fees have been paid as provided in Section 4 hereof. It is recognized that sewer district has a vested interest in limiting and defining the flow that will enter sewer district system in that district has to reserve capacity for other areas of sewer district that will not hereafter require sewer service by connecting to the sewer service of district that is providing services to city pursuant to this agreement.

Section 6. Neither party shall by virtue of this agreement acquire any proprietary or governmental interest in the sewage system or sewerline of the other party. Each party shall be solely responsible for the operation, maintenance, restoration and replacement of its own system of sewers.

Section 7. No waiver by either party of any term or condition of this agreement shall be deemed or construed as a waiver of any other term or condition.

Section 8. Each party agrees and declares that this agreement is a valid exercise of the mutual assistance and interlocal governmental cooperation authority granted to the respective parties under the laws of the State of Washington, and to that end each of the parties agrees to defend and support this agreement as being for the benefit of the health, safety, and general welfare of the general public, and each party further agrees to cooperate with the other party with respect to any appearance which may be required by either party in any proceeding before any other governmental agency.

Section 9. This agreement may be terminated by either party giving twelve (12) months notice to the other party of intent to terminate this agreement whereupon the termination date shall be upon expiration of twelve (12) months from date of receipt of said notice. In the event of termination under this paragraph, all costs of disconnection and replacement and restoration shall be paid by city.

THIS AGREEMENT signed this ____ day of _____, 197__.

NORTHEAST LAKE WASHINGTON SEWER
DISTRICT OF KING COUNTY, WASHINGTON

BY _____
President, Board of Commissioners

BY _____
Secretary, Board of Commissioners

CITY OF KIRKLAND

BY _____

The execution of this agreement approved on behalf of Northeast Lake Washington Sewer District by resolution of its Board of Commissioners, adopted the _____ day of _____, 197___, and authorized by the City of Kirkland by Resolution No. _____ of the Kirkland City Council adopted the ____ day of _____, 197___.

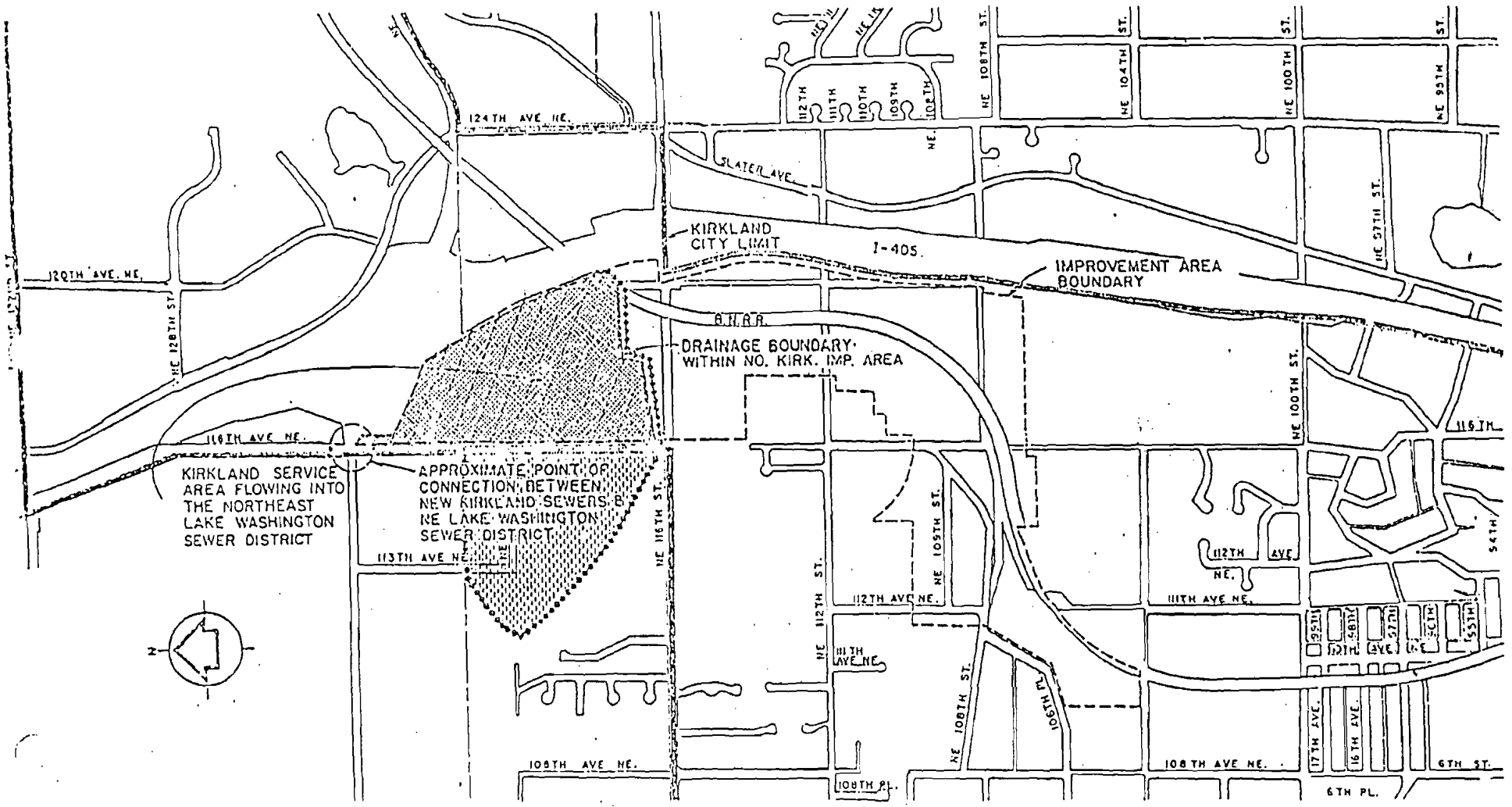

LEGEND: KIRKLAND CITY LIMIT
NO. KIRKLAND IMPROVEMENT AREA BOUNDARY
NE LAKE WASHINGTON SEWER DISTRICT BOUNDARY
DRAINAGE BOUNDARY

Kramer, Chin & Mayo, Inc.
Consulting Engineers, Architects, Applied Scientists
1917 First Avenue, Seattle, Washington 98101
Phone (206) 447-9821

Date	Designed By	Revisions	Drawing Number
7-79	Drawn By		Sheet Number
Scale 1" = 800'	Checked By		1 of 1
	Approved By		

EXHIBIT A
KIRKLAND CITY LIMITS AND NE LAKE WASHINGTON DISTRICT, AND SURFACE DRAINAGE BOUNDARIES IN VICINITY OF STUDY AREA

CITY OF KIRKLAND

NORTHEAST LAKE WASHINGTON SEWER DISTRICT

MUNICIPALITY OF METROPOLITAN SEATTLE

JUANITA SYSTEM IMPROVEMENT AGREEMENT

THIS AGREEMENT, made as of the 3 day of November, 1982, between the City of Kirkland, a municipal corporation of the State of Washington (hereinafter referred to as "the City"), Northeast Lake Washington Sewer and Water District, a municipal corporation of the State of Washington (hereinafter referred to as "the District"), and the Municipality of Metropolitan Seattle, a metropolitan municipal corporation of the State of Washington (hereinafter referred to as "Metro");

W I T N E S S E T H:

WHEREAS, the City and the District have entered into long-term agreements with Metro for sewage disposal dated May 5, 1961 and May 16, 1963 (hereinafter referred to as the "Basic Agreements"); and

WHEREAS, Metro desires to modify and improve certain Metro facilities; and

WHEREAS, said modifications and improvements cannot be undertaken without modifications to certain City and District facilities; and

WHEREAS, it is in the interest of the parties that said modifications and improvements be undertaken;

NOW, THEREFORE, it is hereby agreed as follows:

Section 1. Definitions. The defined terms used in this Agreement shall have the meanings set forth in the Basic Agreements.

Section 2. Design and Construction of Certain Facilities. It shall be the sole responsibility of Metro to design, construct, or otherwise undertake the following:

a. A force main from the City's Kirkland Pumping Station to a point of connection with the District's 21-inch diameter gravity sewer at 98th Avenue N.E. approximately 500 feet south of N.E. Juanita Drive.

b. Modifications to the City's Kirkland Pumping Station necessary to insure operational compatibility with related new facilities.

c. A 12-inch diameter gravity sewer line between Metro's Juanita Heights Pumping Station and the City's Kirkland Pumping Station.

d. Connection of the City's sewer line currently tributary to Metro's Juanita Heights pumping station to the gravity sewer described in item c. of this Section 2.

Plans and specifications for the construction described in this Section 2 shall be in accordance with City specifications and shall be subject to review and approval by the City prior to commencement of construction.

Section 3. Work Involving City Facilities. The City authorizes Metro to construct all modifications to City facilities necessitated by the construction described in Section 2 subject to City review and approval of construction plans and specifications.

Section 4. Ownership and Maintenance of Completed Facilities. From and after the date of completion of the construction described in Section 2, the City shall own, operate, maintain, repair, replace, and be completely responsible for the following facilities as generally depicted on Exhibit A attached hereto:

a. The force main from the City's Kirkland Pumping Station to its point of connection to the District's 21 inch diameter gravity sewer.

b. The 12 inch diameter gravity sewer described in Section 2.c. from the site of Metro's abandoned Juanita Height's Pumping Station to the City's Kirkland Pumping Station.

Section 5. Acceptance of Contractor's Work. Prior to final acceptance of the contractor's work by Metro, the City shall be provided an opportunity to inspect the construction described

in Section 2 and make recommendations regarding deficiencies or incomplete work in accordance with the construction contract. It shall be the responsibility of Metro to pursue remedies enabled by the contractor's guaranty, and Metro agrees to pursue said remedies at the request of the City.

Section 6. Legal Relations. Metro shall take such reasonable actions as may be requested by the City to formalize the transfer of title to facilities conveyed to the City by the completion of construction as set forth in Section 2. From and after said completion, the City shall idemnify and hold harmless Metro from and against any and all claims, litigation, demands and suits for any personal injuries and property damage suffered or incurred by any person arising from the operation, maintenance, repair or replacement of said facilities.

Section 7. Connection to District Facilities. The district authorizes the connection of the force main described in Section 2.a. to its 21 inch diameter gravity sewer generally at the point of connection described in Section 2.a. The connection shall be made in accordance with design and construction standards of the District. The District does not transfer any title, right or interest in its facilities to the City, and the City shall not be permitted to connect its facilities to the District's facilities at any other point along the District's 21-inch diameter sewer line.

Section 8. Use of District Facilities. Following completion of the construction described in Section 2.a. and connection to District facilities as described in Section 7, the District will transport to Metro's Juanita Bay Pumping Station all sewage delivered by the City up to a maximum of 1,500 gpm to the District's 21 inch diameter gravity sewer via said connection for as long as the City may require. Capacity available to transport sewage delivered by the City shall not, in any event, be less than one-half the total capacity of said 21 inch diameter sewer line.

Section 9. Payment to the District by Metro. In consideration for the use of District facilities by the City as described in Section 8, Metro shall pay to the District $75,000, which represents one half the construction cost of the District's 21 inch diameter sewer line referred to in Section 8. Said payment is in consideration of the District's agreement to transport sewage delivered by the City to Metro's Juanita Bay pumping station and said payment is not payment for the transfer of any title, right or interest in the District's 21 inch diameter sewer line to the City.

Section 10. Payment to the District by the City. The City agrees to annually reimburse the District for one-half of future costs incurred by the District for maintenance, repair, and replacement of the District's 21 inch diameter sewer referred to in Section 8 between 98th Street Northeast and Metro's Juanita Bay Pumping Station. Said reimbursement to the District shall be made following submittal to the City of a properly documented invoice. The City's share of the foregoing costs shall not exceed $750 for the first year following connection to the District's 21 inch diameter sewer line. Thereafter the City shall pay one-half of the costs incurred by the District for maintenance, repair and replacement of the District's 21-inch diameter sewer line.

Section 11. Payment to the City by Metro. In consideration for future reimbursement payments to be made by the City as described in Section 10, Metro shall pay to the City $20,000 following commencement of operation of the facilities described in Section 2.

Section 12. Basic Agreement Unchanged. Except as otherwise provided in this Agreement, all provisions of the Basic Agreement shall remain in full force and effect.

IN WITNESS WHEREOF, the parties hereto have executed this Agreement as of the date and year first written above.

City of Kirkland

Mayor

Attest:

Northeast Lake Washington Sewer District

Commissioner

Commissioner

Commissioner

Attest:

Minicipality of Metropolitan Seattle

Executive Director

Attest:

Exhibit A

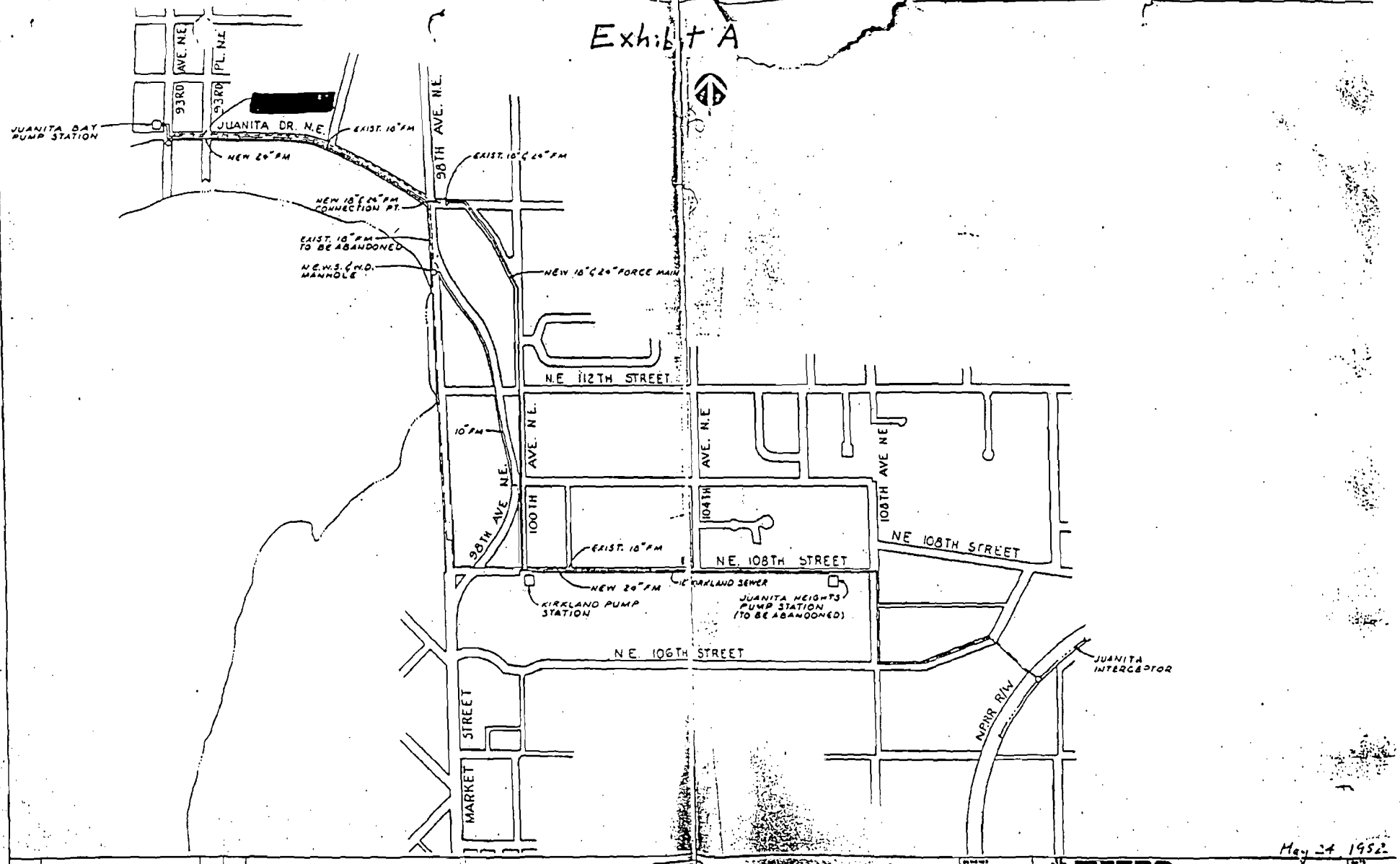

May 24 1952

Kramer, Chin & Mayo, Inc.
Consulting Engineers, Architects, Applied Scientists
1917 First Avenue, Seattle, Washington 98101
Phone (206) 447-5300

METRO Municipality of Metropolitan Seattle

VICINITY MAP

RESOLUTION NO. R-2492

A RESOLUTION OF THE CITY COUNCIL OF THE CITY OF KIRKLAND AUTHORIZING THE MAYOR TO SIGN ON BEHALF OF THE CITY A CERTAIN AGREEMENT BETWEEN THE CITY OF KIRKLAND AND NORTHEAST LAKE WASHINGTON SEWER DISTRICT.

WHEREAS, that portion of the Northwest quarter of the Northwest quarter of the Northwest quarter of Section 32, Township 26, North Range 5, E.W.M., as described in the Agreement between the City of Kirkland and the Northeast Lake Washington Sewer District, copy of which is attached to the original of this resolution, and by this reference incorporated herein, lies within the City of Kirkland and the sewer service area of the City of Kirkland sanitary sewer system, and

WHEREAS, said area is not presently connected to the Kirkland sanitary sewer system and because of the topography of the area will not readily be so connected, and

WHEREAS, the service area and corporate boundaries of Northeast Lake Washington Sewer District lie adjacent to said area and said area can conveniently connect into the existing Northeast Lake Washington sewer system facilities, and

WHEREAS, both the City and the Sewer District are authorized by state law to enter into cooperative agreements,

NOW, THEREFORE, BE IT RESOLVED by the City Council of the City of Kirkland as follows:

Section 1. The Mayor is hereby authorized and directed to sign on behalf of the City of Kirkland that certain agreement, copy of which is attached to the original of this resolution, and by this reference incorporated herein. Said agreement permits the City of Kirkland to connect a portion of the Kirkland sanitary sewer system to be constructed within the area described in said agreement into the existing Northeast Lake Washington Sewer System facility lying within Northeast 116th Street.

Section 2. Said agreement shall become effective upon its being properly signed by both the City of Kirkland,

as herein authorized and by the Northeast Lake Washington Sewer District.

PASSED BY MAJORITY VOTE of the Kirkland City Council in regular meeting on the 6th day of February, 1978.

SIGNED IN AUTHENTICATION thereof on the 6th day of February, 1978.

MAYOR

ATTEST:

Director of Administration & Finance
(ex officio City Clerk)

AGREEMENT

THIS AGREEMENT made and entered into this day by and between the CITY OF KIRKLAND, an optional code city hereinafter sometimes referred to as "City," and NORTHEAST LAKE WASHINGTON SEWER DISTRICT, a municipal corporation, hereinafter sometimes referred to as "Sewer District."

WITNESSETH:

WHEREAS, both City and Sewer District are authorized by state law to enter into cooperative agreements, and

WHEREAS, the area described and designated on Exhibit A (attached hereto and by this reference incorporated herein) as subject area lies within the City of Kirkland and the Sewer Service Area of the City of Kirkland sanitary sewer system, and

WHEREAS, said area is not presently connected to the Kirkland sanitary sewer system, and because of the topography of the area may not readily be so connected, and

WHEREAS, the service area and corporate boundaries of Northeast Lake Washington Sewer District lie adjacent to subject area, and subject area can conveniently connect into the existing Northeast Lake Washington Sewer System facilities, and

WHEREAS, both parties are desirous, where possible and convenient, to mutually assist one another,

NOW, THEREFORE, in consideration of the agreements

R-2492

herein contained, it is agreed as follows:

Section 1. All sanitary sewer facilities to be constructed within the subject area, described and designated on Exhibit A as attached hereto and by this reference incorporated herein, shall upon construction and acceptance become for all purposes, including customer service charges and maintenance, part of the Kirkland sanitary sewer system but may, nevertheless, be connected into the Northeast Lake Washington Sewer District sanitary sewer line lying within Northeast 116th Street (at M-N 13-1) and at the point so designated as connection point on Exhibit A.

Section 2. Sewer District agrees to accept all sewage entering into its system through said connection point and to convey same through its system to its connection with the municipality of metropolitan Seattle system.

Section 3. No part of the cost of construction of the sanitary sewer facilities to be constructed within subject area, nor any of its future maintenance or repair, shall be borne by the Lake Washington Sewer District.

Section 4. City of Kirkland agrees to pay over to Sewer District as to each property within the subject area as it makes sewer connection, an amount equal to two cents (2¢) per square foot of area of each property. In addition thereto, the City will pay to Sewer District a monthly service trunkage charge in an amount equal to forth cents (40¢) per month per residential customer or residential

equivalent actually connected and served by the facilities of the Kirkland Sewer System within the subject area.

Section 5. Neither party shall by virtue of this agreement acquire any proprietary or governmental interest in the sewage system or sewer line of the other party. Each party shall be solely responsible for the operation and maintenance of its own system of sewage collection and shall save the other party harmless from any claim for damage, real or imaginary, made by a third party, and alleging negligence or misfeasance in the operation or maintenance of the other party's system, or acts or omissions of its officers or employees.

Section 6. Each party shall seek and maintain with responsible insurers all such insurance as is customarily maintained with respect to sewage systems of like character and loss of or damage to the respective sewer facilities of each and against public and other liability to the extent that such insurance can be secured and maintained at a reasonable cost. Each party shall supply to the other party upon request a certificate showing such insurance to be in force.

Section 7. No waiver by either party of any term or condition of this agreement shall be deemed or construed as a waiver of any other term or condition nor shall a waiver of any subsequent breach, whether of the same or of a different provision of this agreement.

Section 8. This agreement shall terminate upon twelve (12) months' written notice given by either party to the other party. In the event of termination under this paragraph, all costs of disconnection shall be borne by the party requesting the termination.

THIS AGREEMENT SIGNED the ____ day of _____, 1978.

NORTHEAST LAKE WASHINGTON SEWER DISTRICT

By _____

CITY OF KIRKLAND

By Robert K. Klein

Execution of this Agreement approved on behalf of the Northeast Lake Washington Sewer District by resolution of its Board of Commissioners adopted the ____ day of _____, 1978, and authorized by the City of Kirkland by Resolution No. 2492 of the Kirkland City Council, adopted the 6th day of February, 1978.

PUBLIC WORKS EMERGENCY RESPONSE MUTUAL AID AGREEMENT

FOR

SIGNATORY AGENCIES IN THE STATE OF WASHINGTON

INTRODUCTION

The purpose of the Public Works Emergency Response Mutual Aid Agreement is to permit signatory agencies to make the most efficient use of their powers by enabling them to coordinate resources and to maximize funding reimbursement during disasters/emergencies.

This Agreement will allow signatory agencies to support each other during disasters/emergencies to protect life and property, when the event is beyond the capabilities of the affected entity. This Agreement provides the mechanism for an immediate response to the Requesting Agency provided the Responding Agency has the resources and expertise necessary and available.

When faced with a disaster or emergency, public works agencies have a responsibility to maintain service and recover in the most expedient way. This can best be accomplished by preparation, coordination and cooperation with other public works agencies. Agencies are charged with the responsibility of coordinating efforts and compiling damage and recovery information on disasters and then reporting to the appropriate authority. Then the State requests aid and assistance from the federal government.

The following definitions for disaster and emergency are from the State Comprehensive Disaster Plan and were used in this Public Works Emergency Response Mutual Aid Agreement:

> Disaster - An event expected or unexpected, in which a community's available, pertinent resources are expended; or the need for resources exceeds availability; and in which a community undergoes severe danger; incurring losses so that the social or economic structure of the community is disrupted; and the fulfillment of some or all of the community's essential functions are prevented.
>
> Emergency - An event, expected or unexpected, involving shortages of time and resources; that places life, property or the environment, in danger; that requires response beyond routine incident response resources.

The reference guide is designed to be useful to individual agencies during a proclaimed emergency -- whether it be to borrow a piece of equipment for a specific job or request crews to assist in repair of a major failure. The reference guide will be updated and revised periodically, please insert the revisions immediately.

AGREEMENT

PUBLIC WORKS

EMERGENCY RESPONSE

MUTUAL AID AGREEMENT

WHEREAS, the purpose of this pre-disaster agreement between the agencies is to provide for immediate assistance to protect life and property;

WHEREAS, this Agreement is authorized under State of Washington, RCW's 35 (City), 36 (County), 38.52 (Emergency Management), 39.34 (Interlocal Agreement) and 47 (Public Highway Transportation (DOT)); which is activated only in the event of a proclamation of an emergency by the local and/or state government approving authority;

WHEREAS, the agency asking for assistance from any signatory agency will herein be referred to as the Requesting Agency;

WHEREAS, the signatory agency agreeing to assist another signatory agency asking for assistance will herein be referred to as the Responding Agency;

WHEREAS, it is necessary and desirable that this Agreement be executed for the exchange of mutual aid; with the intent to supplement not supplant agency personnel.

NOW, THEREFORE, it is hereby agreed by each and all of the parties signatory to the Agreement as follows:

1. Each agency signatory to this Agreement agrees to furnish, upon its sole discretion, those resources and services it deems to be available to each other signatory agency hereto as necessary to assist in the prevention, response, recovery and mitigation of proclaimed emergencies/disasters.

2. It is hereby understood that this Agreement shall not supplant pre-existing mutual aid agreements nor deny the right of any agency hereto to negotiate other mutual aid agreements.

3. The Responding Agency shall assist in only those situations for which it has determined it has qualified personnel, appropriate equipment and necessary materials. Resources of the Responding Agency that are made available to the Requesting Agency shall, whenever possible,

remain under the control and direction of the Responding Agency. The Requesting Agency shall coordinate the activities and resources of all Responding Agencies.

4. It is hereby understood that the Responding Agency will be reimbursed (e.g., labor, equipment, materials and other related expenses as applicable, including loss or damage to equipment) at its adopted usual and customary rates. The Responding Agency shall submit an itemized voucher of costs to the Executive Head of the Requesting Agency within sixty (60) days after completion of work (RCW 38.52.080). Unless otherwise agreed, the Responding Agency shall receive reimbursement within ninety (90) days after the voucher submittal date.

5. The Responding Agency shall have no responsibilities or incur any liabilities because it does not provide resources and/or services to any other party to this Agreement. The Responding Agency shall retain the right to withdraw some or all of its resources at any time. Notice of intention to withdraw shall be communicated to the Requesting Agency's designated official, or the official's designee, as soon as practicable.

6. All privileges, immunities, rights, duties and benefits of officers and employees of the Responding Agency shall apply while those officers and employees are performing functions and duties on behalf of the Requesting Agency, unless otherwise provided by law. Employees of the Responding Agency remain employees of the Responding Agency while performing functions and duties on behalf of the Requesting Agency (RCW 38.52.080).

7. To the extent permitted by law, the Requesting Agency shall protect, defend, hold harmless and indemnify all other Responding signatory Agencies, and their officers and employees from any and all claims, suits, costs, damages of any nature, or causes of action, including the cost of defense and attorneys fees, by reason of the acts or omissions, whether negligent, willful, or reckless, of its own officers, employees, agency or any other person arising out of or in connection with any acts or activities authorized by this agreement, and will pay all judgments, if any, rendered. This obligation shall not include such claims, costs, damages or other expenses which may be caused by the sole negligence of the Responding Agencies or their authorized agents or employees.

8. Authorization and approval of this Agreement shall be in a manner consistent with the Agency's current procedures. This Agreement shall be effective upon approval by two or more agencies and shall remain in effect as long as two or more agencies are parties to this Agreement. Upon execution of this Agreement, the agency shall send an original or a certified copy of the agreement to the Washington State Department of Transportation, Highways & Local Programs Service Center. Highways & Local Programs shall maintain a list of all signatory agencies and send an updated list to all agencies whenever an agency is added or removed from the list.

9. Any agency signatory to this Agreement may cancel its participation in this Agreement by giving written notice to the Washington State Department of Transportation, Highways & Local Programs Service Center.

10. This Agreement is for the benefit of the signatory agencies only and no other person or entity shall have any rights whatsoever under this Agreement as a third party beneficiary.

THIS PAGE INTENTIONALLY LEFT BLANK

APPENDIX C

SEPA Checklist

THIS PAGE INTENTIONALLY LEFT BLANK

CITY OF KIRKLAND
Planning & Building Department
123 5th Avenue, Kirkland, WA 98033
425.587.3600 ~ www.kirklandwa.gov

MEMORANDUM

To: Eric R. Shields, AICP, SEPA Responsible Official

From: **Aoife Blake, Planner**

Date: September 20, 2017

File: SEP16-00300

Subject: STATE ENVIRONMENTAL POLICY ACT (SEPA) DETERMINATION
GENERAL SEWER PLAN UPDATE

GENERAL

The applicant, The City of Kirkland, is proposing a regular update to the City's General Sewer Plan. The applicant is proposing to update and improve the existing sewer plan to meet future needs as outlined by the City's Comprehensive Plan. All future individual construction projects proposed under the General Sewer Plan will be reviewed through an independent SEPA review. The proposed plan update has been reviewed for compliance with all applicable codes and laws.

ANALYSIS

The SEPA "threshold determination" is the formal decision as to whether the proposal is likely to cause a significant adverse environmental impact for which mitigation cannot be identified. If it is determined that a proposal may have a significant adverse impact that cannot be mitigated, an Environmental Impact Statement (EIS) would be required.

Many environmental impacts are mitigated by City codes and development regulations. For example, the Kirkland Zoning Code has regulations that protect sensitive areas, limit noise, provide setbacks, establish height limits, etc. Where City regulations have been adopted to address an environmental impact, it is presumed that such regulations are adequate to achieve sufficient mitigation [WAC 197-11-660(1)(e) and (g)].

I have had an opportunity to review the Environmental Checklist dated June 22, 2017 (see Attachment 1) for the plan update referenced above.

CONCLUSION

Based on my review of all available information and adopted policies of the City, I have not identified any significant adverse environmental impacts. Therefore, I recommend that a Determination of Non-Significance be issued for this proposed action.

ATTACHMENTS

1. Environmental Checklist
2. General Sewer Plan

☒ I concur ☐ I do not concur

Comments:_____

_____

_____

_____

_____

September 20, 2017

Eric R. Shields, Planning & Building Director Date

cc: Josh Pantzke, City of Kirkland, Department of Public Works

September 26, 2017

Josh Pantzke,
City of Kirkland, Department of Public Works,
915 8th Street
Kirkland, WA 98033

Dear Mr. Pantzke,

Subject: Environmental Determination, File No. SEP16-00300

The City has completed its environmental review of your application and has issued a Determination of non-significance for the proposed project (attached).

Should you wish to appeal the SEPA determination, a written appeal must be submitted to the City by October 10, 2017. The appeal should include a concise statement of the matter being appealed, the specific components or aspects being appealed, the rationale for contention on appeal, and a statement of standing to appeal. The fee for appealing the Environmental Determination is $220.46.

Should you have any questions regarding this letter, please contact me at 425.587.3262, and refer to File No. SEP16-00300.

Sincerely,

PLANNING AND BUILDING DEPARTMENT

Aoife Blake

Aoife Blake
Planner

Attachment: Environmental Determination

THIS PAGE INTENTIONALLY LEFT BLANK

CITY OF KIRKLAND
Planning and Building Department
123 5th Avenue, Kirkland, WA 98033
www.kirklandwa.gov ~ 425.587.3600

DETERMINATION OF NON-SIGNIFICANCE (DNS)

Case No.: SEP16-00300 **DATE ISSUED:** September 26, 2017

Project Name: General Sewer Plan Update

Project Location: Citywide

Project Description: Non Project Action for Adoption of the General Sewer Plan Update

Proponent: City of Kirkland, Public Works Department

Project Planner: Aoife Blake, Planner

Lead agency is the City of Kirkland

The lead agency for this proposal has determined that it does not have a probable significant adverse impact on the environment. An environmental impact statement (EIS) is not required under RCW 43.21.030 (2)(c). This decision was made after review of a completed environmental checklist and other information on file with the lead agency. This information is available to the public upon request.

☒ There is no comment period for this DNS.

Responsible official: _____ September 20, 2017

Eric R. Shields, AICP, Planning & Building Director Date
City of Kirkland
Planning & Building Department
123 Fifth Avenue, Kirkland, WA 98033 – 425.587.3600

☒ There is no administrative appeal period for this DNS (KMC 24.02.230(a))

Distribute this notice with a copy of the Environmental Checklist to:

GENERAL NOTICING

- Department of Ecology - Environmental Review
- Muckleshoot Tribal Council - Environmental Division, Tribal Archeologist
- Muckleshoot Tribal Council - Environmental Division, Fisheries Division Habitat
- Cascade Water Alliance – Director of Planning
- All Neighborhood Associations
- Lake Washington School District No. 414: Budget Manager and Director of Support Services
- Washington State Dept. of Archaeology & Historic Preservation
- King County Dept. of Transportation - Employer Transportation Representative
- Seattle & King County Public Health - SEPA Coordinator
- Houghton Community Council

AGENCIES WITH JURISDICTION, AFFECTED AGENCIES, AND/OR INTERESTED PARTIES

- Department of Ecology - Environmental Review Department of Fish and Wildlife – Olympia
- Muckleshoot Tribal Council - Environmental Division, Fisheries Division Habitat Program
- Washington State Parks & Recreation Commission – Agency Director
- Eastside Audubon Society
- Northshore Utility District - Operations Department, Engineering Director, and Senior Civil Engineer
- Seattle City Light - Department of Finance and Administration
- King County Wastewater Treatment Division – SEPA Lead and Property Agent
- City of Bellevue - Director, Planning Dept.
- City of Redmond - Director, Planning Dept.
- Puget Sound Regional Council - SEPA Review

cc: Applicant

Distributed by: KSBayes September 26, 2017

(Karin S. Bayes, Office Specialist) Date

CITY OF KIRKLAND
Planning and Community Development Department
123 Fifth Avenue, Kirkland, WA 98033
425.587.3225 - www.kirklandwa.gov

SEPA ENVIRONMENTAL CHECKLIST

UPDATED MAY 2015

Purpose of checklist:
Governmental agencies use this checklist to help determine whether the environmental impacts of your proposal are significant. This information is also helpful to determine if available avoidance, minimization or compensatory mitigation measures will address the probable significant impacts or if an environmental impact statement will be prepared to further analyze the proposal.

***Instructions for applicants*:**
This environmental checklist asks you to describe some basic information about your proposal. Please answer each question accurately and carefully, to the best of your knowledge. You may need to consult with an agency specialist or private consultant for some questions. You may use "not applicable" or "does not apply" only when you can explain why it does not apply and not when the answer is unknown. You may also attach or incorporate by reference additional studies reports. Complete and accurate answers to these questions often avoid delays with the SEPA process as well as later in the decision-making process.

The checklist questions apply to all parts of your proposal, even if you plan to do them over a period of time or on different parcels of land. Attach any additional information that will help describe your proposal or its environmental effects. The agency to which you submit this checklist may ask you to explain your answers or provide additional information reasonably related to determining if there may be significant adverse impact.

Instructions for Lead Agencies:
Please adjust the format of this template as needed. Additional information may be necessary to evaluate the existing environment, all interrelated aspects of the proposal and an analysis of adverse impacts. The checklist is considered the first but not necessarily the only source of information needed to make an adequate threshold determination. Once a threshold determination is made, the lead agency is responsible for the completeness and accuracy of the checklist and other supporting documents.

Use of checklist for nonproject proposals:
For nonproject proposals (such as ordinances, regulations, plans and programs), complete the applicable parts of sections A and B plus the SUPPLEMENTAL SHEET FOR NONPROJECT ACTIONS (part D). Please completely answer all questions that apply and note that the words "project," "applicant," and "property or site" should be read as "proposal," "proponent," and "affected

geographic area," respectively. The lead agency may exclude (for non-projects) questions in Part B - Environmental Elements –that do not contribute meaningfully to the analysis of the proposal.

A. Background

1. Name of proposed project, if applicable: 2017 General Sewer Plan (GSP) Update

2. Name of applicant: City of Kirkland Public Works Department

3. Address and phone number of applicant and contact person:

   Josh Pantzke
   123 5th Avenue, Kirkland, WA 98033
   (425) 587-3917

4. Date checklist prepared: June 15, 2017

5. Agency requesting checklist: City of Kirkland, Department of Planning and Community Development

6. Proposed timing or schedule (including phasing, if applicable):

   The adoption of the GSP is scheduled to be completed in 2017. The GSP addresses the policies, design criteria, and recommendations needed to construct, maintain, and manage the City's sewer system for proposed land use development, as dictated by the comprehensive land use plans. The GSP will be updated or supplemented on a regular basis.

7. Do you have any plans for future additions, expansion, or further activity related to or connected with this proposal? If yes, explain.

   Yes. Future sewer improvements will be based on the GSP. Any future design or construction will complete an appropriate SEPA review. The City's GPS is updated on a 6-year renewal basis. Any desired changes to the recommendations within the Plan will require a comprehensive plan amendment. It is recommended that this plan be updated next in 2023.

8. List any environmental information you know about that has been prepared, or will be prepared, directly related to this proposal.

   None.

9. Do you know whether applications are pending for governmental approvals of other proposals directly affecting the property covered by your proposal? If yes, explain.

   None at this time.

10. List any government approvals or permits that will be needed for your proposal, if known.

Washington State Department of Ecology and Kirkland City Council.

11. Give brief, complete description of your proposal, including the proposed uses and the size of the project and site. There are several questions later in this checklist that ask you to describe certain aspects of your proposal. You do not need to repeat those answers on this page. (Lead agencies may modify this form to include additional specific information on project description.)

The 2017 GSP Update will provide a sewer planning document for the City of Kirkland (City) that meets the requirements of Washington Administrative Code (WAC) 173-240-050. The City's most recent GSP was completed in 2010; since that time, changes in growth and development timing have caused the 2010 GSP to be outdated. The GSP provides planning for sewer improvements within the City's sewer service area, which serves approximately 29,481 people and encompasses approximately 5,630 total acres.

12. Location of the proposal. Give sufficient information for a person to understand the precise location of your proposed project, including a street address, if any, and section, township, and range, if known. If a proposal would occur over a range of area, provide the range or boundaries of the site(s). Provide a legal description, site plan, vicinity map, and topographic map, if reasonably available. While you should submit any plans required by the agency, you are not required to duplicate maps or detailed plans submitted with any permit applications related to this checklist.

The City's sewer service area is located within King County and is bordered on the west by Lake Washington, on the east by the City of Redmond (Redmond), on the north by the Northshore Utility District, and on the south by the City of Bellevue. The City's sewer service boundaries have been established by agreements and policies, but could be altered by annexation. The ability to serve customers will be considered as part of any annexation and any future boundary change will be addressed in appropriate updates or amendments to this Plan.

B. ENVIRONMENTAL ELEMENTS

1. Earth

a. General description of the site: Urban area composed of flat, hilly, and steep slopes.

(circle one): Flat, rolling, hilly, steep slopes, mountainous, other _____

b. What is the steepest slope on the site (approximate percent slope)?

Approximately 45-percent slopes are present in some areas of the sewer service area.

c. What general types of soils are found on the site (for example, clay, sand, gravel, peat, muck)? If you know the classification of agricultural soils, specify them and note any agricultural land of long-term commercial significance and whether the proposal results in removing any of these soils.

Based on a review of the Natural Resources Conservation Service's Web Soil Survey for the City's sewer service area, the primary soil types (i.e., soil types accounting for more than 1 percent of the service area) include Alderwood gravelly sandy loam; Arents, Alderwood material; Everett very

gravelly sandy loam; Indianola loamy sand; Kitsap silt loam; Ragnar-Indianola association; and Seattle muck.

d. Are there surface indications or history of unstable soils in the immediate vicinity? If so, describe.

Many areas on the slopes of Lake Washington have been identified as having soil types that are susceptible to erosion. The current landslide map for the City indicates that certain parts within the sewer service area may be susceptible to landslide hazards.

e. Describe the purpose, type, total area, and approximate quantities and total affected area of any filling, excavation, and grading proposed. Indicate source of fill.

No filling, excavation, or grading are proposed. This SEPA Checklist is for the City's GSP. No projects identified in the GSP are expected to require grading or filling of a site. All trench backfilling will be done with the native material taken from the trench unless it does not meet backfill standards. If native material is deemed un-suitable, import backfill material will be used. All imported backfill material will be addressed in the environmental review during specific project design phases.

f. Could erosion occur as a result of clearing, construction, or use? If so, generally describe.

Not for City's GSP. There is a potential for erosion impacts during the construction of specific projects.

g. About what percent of the site will be covered with impervious surfaces after project construction (for example, asphalt or buildings)?

N/A for the City's GSP. Sewer projects do not generally create impervious surfaces and if a specific project should add impervious surface it will be identified at the time of the SEPA review for that specific project.

h. Proposed measures to reduce or control erosion, or other impacts to the earth, if any:

Temporary erosion and sedimentation control (TESC) plans, in conformance with City requirements, will be included as part of the project design and specifications. On-site inspection during construction will occur to monitor and correct any potential erosion problems.

2. Air

a. What types of emissions to the air would result from the proposal during construction, operation, and maintenance when the project is completed? If any, generally describe and give approximate quantities if known.

Potential for vehicular and equipment emissions may affect the ambient air quality for short periods of time during construction of specific sewer system projects. These impacts will be addressed during the review process for the specific projects.

b. Are there any off-site sources of emissions or odor that may affect your proposal? If so, generally describe.

No.

c. Proposed measures to reduce or control emissions or other impacts to air, if any:

Measures for reducing or controlling emissions and other air impacts will be addressed during the review process for the specific projects.

3. **Water**

a. Surface Water:

1) Is there any surface water body on or in the immediate vicinity of the site (including year-round and seasonal streams, saltwater, lakes, ponds, wetlands)? If yes, describe type and provide names. If appropriate, state what stream or river it flows into.

Several streams are present in the sewer service area, including Juanita Creek and Forbes Creek. Many wetland areas have also been identified within the service area. Lake Washington borders the City to the west, and Forbes Lake is also present in the sewer service area.

2) Will the project require any work over, in, or adjacent to (within 200 feet) the described waters? If yes, please describe and attach available plans.

Any project identified within the GSP that is within 200 feet of the described waters will be addressed through the SEPA and Shoreline Permit review process specific to that project. It is the City's goal to avoid construction in or around wetlands, lakes, or streams. It is, however, reasonable to anticipate that work on existing pipelines in the vicinity of wetlands, lakes, or streams, or other engineering constraints, may result in few alternative options for new construction. If work is required in or around wetlands, lakes, or streams the issue will be addressed in the SEPA review for that specific project. Additional compliance may be required through the City's Critical Areas Ordinance, depending on the nature of the proposed sewer project. Reasonable efforts will be made to maintain the integrity, restoration, and/or replacement of all impacted wetland areas and buffers, as required by state and local regulations.

3) Estimate the amount of fill and dredge material that would be placed in or removed from surface water or wetlands and indicate the area of the site that would be affected. Indicate the source of fill material.

Any fill and dredged material that may be placed in or removed from surface water, streams, or wetlands will be addressed in the SEPA review of individual projects. All City codes, as well as any outside state or federal agency requirements, will be met as provided in any SEPA process.

4) Will the proposal require surface water withdrawals or diversions? Give general description, purpose, and approximate quantities if known.

No, it is not anticipated that there will be any discharge to or withdrawal from surface waters as a result of the projects identified within the GSP.

5) Does the proposal lie within a 100-year floodplain? If so, note location on the site plan.

Portions of specific projects may be located within the 100-year floodplain. When applicable, these projects will address the issue in the SEPA review process specific to those individual projects. All City codes, as well as any outside agency requirements, will be met as provided for in the SEPA finding.

6) Does the proposal involve any discharges of waste materials to surface waters? If so, describe the type of waste and anticipated volume of discharge.

No, it is not anticipated that there will be any discharge of waste materials to surface waters as a result of the projects identified within the GSP.

b. Ground Water:

1) Will groundwater be withdrawn from a well for drinking water or other purposes? If so, give a general description of the well, proposed uses and approximate quantities withdrawn from the well. Will water be discharged to groundwater? Give general description, purpose, and approximate quantities if known.

No.

2) Describe waste material that will be discharged into the ground from septic tanks or other sources, if any (for example: Domestic sewage; industrial, containing the following chemicals. . . ; agricultural; etc.). Describe the general size of the system, the number of such systems, the number of houses to be served (if applicable), or the number of animals or humans the system(s) are expected to serve.

None.

N/A – none

c. Water runoff (including stormwater):

1) Describe the source of runoff (including storm water) and method of collection and disposal, if any (include quantities, if known). Where will this water flow? Will this water flow into other waters? If so, describe.

There will be no runoff that can be directly attributed to the adoption of this GSP or any completed project as described within the GSP. Any runoff that may occur during construction of a specific project will be subject to City codes, as well as outside agency requirements identified in the project's SEPA finding.

2) Could waste materials enter ground or surface waters? If so, generally describe.

No.

3) Does the proposal alter or otherwise affect drainage patterns in the vicinity of the site? If so, describe.

No.

d. Proposed measures to reduce or control surface, ground, and runoff water, and drainage pattern impacts, if any:

Proposed measures to reduce or control surface, ground, and runoff water impacts will be addressed in the SEPA review of individual projects. All City codes, as well as any outside agency requirements, will be met as provided for in the SEPA findings for specific projects.

4. Plants

a. Check the types of vegetation found on the site:

__x_deciduous tree: alder, maple, aspen, other
__x_evergreen tree: fir, cedar, pine, other
__x_shrubs
__x_grass
____pasture
____crop or grain
____Orchards, vineyards or other permanent crops.
__x_wet soil plants: cattail, buttercup, bullrush, skunk cabbage, other
__x_water plants: water lily, eelgrass, milfoil, other
__x_other types of vegetation

b. What kind and amount of vegetation will be removed or altered?

It is expected that localized impacts to vegetation could occur as a result of clearing to accommodate construction of proposed sewer facilities. Any potential removal or alteration of vegetation will be addressed in the SEPA review of individual projects. All City codes will be followed and any necessary removal will be mitigated at the time of application.

c. List threatened and endangered species known to be on or near the site.

The presence of any threatened or endangered species will be addressed in the SEPA review of individual projects.

d. Proposed landscaping, use of native plants, or other measures to preserve or enhance vegetation on the site, if any:

Any proposed landscaping, use of native plants, or other measures to preserve or enhance vegetation will be addressed in the SEPA review of specific projects.

e. List all noxious weeds and invasive species known to be on or near the site.

The presence of noxious weeds and invasive species will be addressed in the SEPA review of individual projects.

5. **Animals**

a. List any birds and other animals which have been observed on or near the site or are known to be on or near the site.

Examples include:

birds: hawk, heron, eagle, songbirds, other:
mammals: deer, bear, elk, beaver, other:
fish: bass, salmon, trout, herring, shellfish, other _____

The presence of animals will be addressed in the SEPA review process for specific projects.

b. List any threatened and endangered species known to be on or near the site.

Some protected species have been observed in the sewer service area, but it is not expected that the proposed GSP would adversely impact these species in the long term. Short-term construction impacts may occur. These impacts would be discussed in the SEPA review of the specific projects and avoided wherever possible.

c. Is the site part of a migration route? If so, explain.

Yes. Anadromous fish, such as salmon and steelhead, migrate through Lake Washington and into lakes, tributaries, and streams for spawning. Additionally, the region is part of the Pacific Flyway for migratory birds. For instance, waterfowl, including Canadian geese, visit large wetland areas bordering Lake Washington during their seasonal migration.

d. Proposed measures to preserve or enhance wildlife, if any:

Any potential measures to preserve or enhance wildlife will be addressed in the SEPA review of individual projects.

e. List any invasive animal species known to be on or near the site.

The presence of any invasive species will be included in the SEPA review for specific projects.

6. **Energy and Natural Resources**

a. What kinds of energy (electric, natural gas, oil, wood stove, solar) will be used to meet the completed project's energy needs? Describe whether it will be used for heating, manufacturing, etc.

Some facilities identified within the GSP will require electrical energy to run pumps and the telemetry system.

b. Would your project affect the potential use of solar energy by adjacent properties? If so, generally describe.

No.

c. What kinds of energy conservation features are included in the plans of this proposal? List other proposed measures to reduce or control energy impacts, if any:

All facilities will be constructed utilizing efficient energy use systems that will not affect safety or reliability.

7. **Environmental Health**

a. Are there any environmental health hazards, including exposure to toxic chemicals, risk of fire and explosion, spill, or hazardous waste, that could occur as a result of this proposal? If so, describe.

No.

1) Describe any known or possible contamination at the site from present or past uses.

None known.

2) Describe existing hazardous chemicals/conditions that might affect project development and design. This includes underground hazardous liquid and gas transmission pipelines located within the project area and in the vicinity.

Any hazardous chemical/conditions that might affect project development and design will be addressed in the SEPA review for specific projects.

3) Describe any toxic or hazardous chemicals that might be stored, used, or produced during the project's development or construction, or at any time during the operating life of the project.

Any toxic or hazardous chemicals that might be stored, used, or produced will be addressed in the SEPA review for specific projects.

4) Describe special emergency services that might be required.

The City's Public Works Department is on-call to address any emergency that may occur.

5) Proposed measures to reduce or control environmental health hazards, if any:

N/A.

b. Noise

1) What types of noise exist in the area which may affect your project (for example: traffic, equipment, operation, other)?

Existing noise will not affect construction or operations of projects proposed within the GSP.

2) What types and levels of noise would be created by or associated with the project on a short-term or a long-term basis (for example: traffic, construction, operation, other)? Indicate what hours noise would come from the site.

There will not be any noise associated with the adoption of the GSP. The projects identified in the GSP will have short-term noise impacts associated with the construction process.

3) Proposed measures to reduce or control noise impacts, if any:

As projects are developed pursuant to the GSP, the construction of those projects will meet all City codes, including those regulating noise.

8. **Land and Shoreline Use**

a. What is the current use of the site and adjacent properties? Will the proposal affect current land uses on nearby or adjacent properties? If so, describe.

Current land use within the planning area varies from business/commercial/industrial to single-family and multi-family residential to vacant land. This proposal will not affect current land uses.

b. Has the project site been used as working farmlands or working forest lands? If so, describe. How much agricultural or forest land of long-term commercial significance will be converted to other uses as a result of the proposal, if any? If resource lands have not been designated, how many acres in farmland or forest land tax status will be converted to nonfarm or nonforest use?

No.

c. Will the proposal affect or be affected by surrounding working farm or forest land normal business operations, such as oversize equipment access, the application of pesticides, tilling, and harvesting? If so, how:

No.

d. Describe any structures on the site.

Structures throughout the sewer service area vary from residential to industrial, including single-family, multi-family, commercial, retail, office, and light manufacturing.

e. Will any structures be demolished? If so, what?

Demolition of structures before or during construction of any GSP identified project is not anticipated. If a structure must be demolished it will be addressed through the SEPA review for a specific project.

f. What is the current zoning classification of the site?

The GSP covers all areas of the City's sewer service area and involves all zoning within the City code.

g. What is the current comprehensive plan designation of the site?

Varies, including commercial, residential, light industrial, park, and other.

h. If applicable, what is the current shoreline master program designation of the site?

The service area includes some properties within the shoreline master program (SMP) designation, as follows:

- Residential – Low;
- Residential – Medium-High;
- Natural;
- Urban Conservancy; and
- Urban Mixed.

i. Has any part of the site been classified as a critical area by the city or county? If so, specify.

Some of the projects identified within the GSP are in areas that may be classified as "environmentally sensitive" in categories such as steep slopes, erodible soils, streams, lakes, and wetlands. These projects will be addressed in the SEPA review of the individual project to determine the alternative with the least environmental impact. All City codes, as well as any outside agency requirements, will be met as provided for in the SEPA finding.

j. Approximately how many people would reside or work in the completed project?

Presently, the City's sewer system services approximately 29,481 people. The GSP addresses sewer needs for full development under current comprehensive land use plans.

k. Approximately how many people would the completed project displace?

None.

l. Proposed measures to avoid or reduce displacement impacts, if any:

N/A.

m. Proposed measures to ensure the proposal is compatible with existing and projected land uses and plans, if any:

The GSP is prepared to be consistent with the City's Comprehensive Plan and with the GSP documents for adjacent municipalities. The Public Works Department will maintain coordination with the Comprehensive Land Use Plan by updating or amending the GSP as needed. To ensure compatibility, the GSP will be reviewed by all applicable state agencies and adjacent utilities.

n. Proposed measures to ensure the proposal is compatible with nearby agricultural and forest lands of long-term commercial significance, if any:

N/A.

9. **Housing**

a. Approximately how many units would be provided, if any? Indicate whether high, middle, or low-income housing.

None.

b. Approximately how many units, if any, would be eliminated? Indicate whether high, middle, or low-income housing.

None.

c. Proposed measures to reduce or control housing impacts, if any:

N/A.

10. **Aesthetics**

a. What is the tallest height of any proposed structure(s), not including antennas; what is the principal exterior building material(s) proposed?

N/A.

b. What views in the immediate vicinity would be altered or obstructed?

Any view that may be altered or obstructed will be addressed in the SEPA review for individual projects.

b. Proposed measures to reduce or control aesthetic impacts, if any:

If any projects identified within the GSP have aesthetic impacts they will be addressed in the SEPA review of that project. All City codes, as well as outside agency requirements, will be met as provided in any SEPA finding.

11. **Light and Glare**

a. What type of light or glare will the proposal produce? What time of day would it mainly occur?

No light or glare will be produced by the adoption of the GSP. The projects identified within the GSP may create temporary increases in ambient lighting during construction activities.

b. Could light or glare from the finished project be a safety hazard or interfere with views?

No.

c. What existing off-site sources of light or glare may affect your proposal?

None.

d. Proposed measures to reduce or control light and glare impacts, if any:

Any potential lighting impacts due to construction activities for specific projects will be addressed in the SEPA review for that project.

12. Recreation

a. What designated and informal recreational opportunities are in the immediate vicinity?

The City offers numerous designated and informal recreational opportunities, including parks, community centers, beaches, and docks, etc.

b. Would the proposed project displace any existing recreational uses? If so, describe.

The City does not anticipate any permanent impacts to existing recreational uses. Some of the projects identified within the GSP may have temporary impacts, such as access problems during construction.

c. Proposed measures to reduce or control impacts on recreation, including recreation opportunities to be provided by the project or applicant, if any:

Any impacts would be discussed in the SEPA review of individual projects. All City codes, as well as any outside agency requirements, will be met as provided in the SEPA finding.

13. Historic and cultural preservation

a. Are there any buildings, structures, or sites, located on or near the site that are over 45 years old listed in or eligible for listing in national, state, or local preservation registers located on or near the site? If so, specifically describe.

The sewer service area contains 11 homes, buildings, and/or sites on the national, state, and/or local preservation registers according to the Washington Information System for Architectural & Archeological Records Data (WISAARD).

b. Are there any landmarks, features, or other evidence of Indian or historic use or occupation? This may include human burials or old cemeteries. Are there any material evidence, artifacts, or areas of cultural importance on or near the site? Please list any professional studies conducted at the site to identify such resources.

To be determined during the SEPA review of individual projects.

c. Describe the methods used to assess the potential impacts to cultural and historic resources on or near the project site. Examples include consultation with tribes and the department of archeology and historic preservation, archaeological surveys, historic maps, GIS data, etc.

N/A.

d. Proposed measures to avoid, minimize, or compensate for loss, changes to, and disturbance to resources. Please include plans for the above and any permits that may be required.

Any measures that may be necessary to reduce or control impacts to cultural and historic resources will be mitigated at the time individual projects are reviewed per SEPA requirements. If any evidence of historical, archaeological, scientific, or cultural importance is discovered, there will be a cessation of construction activity until a proper survey can be completed.

14. Transportation

a. Identify public streets and highways serving the site or affected geographic area and describe proposed access to the existing street system. Show on site plans, if any.

The transportation system within the service area consists of major transportation corridors, arterials, City streets, and local access roads. The transportation corridors include Interstate 405 and State Route 520. The City's sewer system is planned and constructed, in the most part, to utilize public street rights-of-way and alleys.

b. Is the site or affected geographic area currently served by public transit? If so, generally describe. If not, what is the approximate distance to the nearest transit stop?

Yes – transit service is available throughout the service area.

c. How many additional parking spaces would the completed project or non-project proposal have? How many would the project or proposal eliminate?

N/A.

d. Will the proposal require any new or improvements to existing roads, streets, pedestrian, bicycle or state transportation facilities, not including driveways? If so, generally describe (indicate whether public or private).

Projects within the GSP will not require any new roadways. Construction impacts may make it necessary to make temporary improvements to accommodate access or to restore an existing roadway.

e. Will the project or proposal use (or occur in the immediate vicinity of) water, rail, or air transportation? If so, generally describe.

N/A.

f. How many vehicular trips per day would be generated by the completed project or proposal? If known, indicate when peak volumes would occur and what percentage of the volume would be trucks (such as commercial and nonpassenger vehicles). What data or transportation models were used to make these estimates?

There will be temporary increases in vehicular trips during construction of specific projects identified in the GSP.

g. Will the proposal interfere with, affect or be affected by the movement of agricultural and forest products on roads or streets in the area? If so, generally describe.

No.

h. Proposed measures to reduce or control transportation impacts, if any:

If any of the identified projects have impacts to transportation, such as detours or other measures, the impacts will be discussed in the SEPA checklist submitted for those specific projects. All City codes, as well as any outside agency requirements, will be met as provided in the SEPA findings.

15. **Public Services**

a. Would the project result in an increased need for public services (for example: fire protection, police protection, public transit, health care, schools, other)? If so, generally describe.

No.

b. Proposed measures to reduce or control direct impacts on public services, if any.

If any of the identified projects have impacts on public services, the impacts will be discussed in the SEPA checklist submitted for those specific projects. All City codes, as well as any outside agency requirements, will be met as provided in the SEPA findings.

16. **Utilities**

a. Circle utilities currently available at the site: electricity, natural gas, water, refuse service, telephone, sanitary sewer, septic system, other _____

N/A. The available utilities will be addressed in the SEPA review of individual projects.

b. Describe the utilities that are proposed for the project, the utility providing the service, and the general construction activities on the site or in the immediate vicinity which might be needed.

The proposed utilities will be addressed in the SEPA review of individual projects.

C. Signature

The above answers are true and complete to the best of my knowledge. I understand that the lead agency is relying on them to make its decision.

Signature: _____

Name of signee Josh Pantzke

Position and Agency/Organization City of Kirkland Utility Manager
Date Submitted: June 22, 2017

D. Supplemental Sheet for Nonproject Actions

(**IT IS NOT NECESSARY** to use this sheet for project actions)

Because these questions are very general, it may be helpful to read them in conjunction with the list of the elements of the environment.

When answering these questions, be aware of the extent the proposal, or the types of activities likely to result from the proposal, would affect the item at a greater intensity or at a faster rate than if the proposal were not implemented. Respond briefly and in general terms.

1. How would the proposal be likely to increase discharge to water; emissions to air; production, storage, or release of toxic or hazardous substances; or production of noise?

The GSP references separate, preliminary capital improvement projects (CIPs) that could individually facilitate increases in discharges to receiving water, and affect the quality of the effluent and the loading of contaminants to those receiving waters. These changes in quality and quantity would be within (or restricted by) limits specified by permit under state and federal law. This non-project action itself is not likely to increase emissions to air; production, storage, or release of toxic or hazardous substances; or production of noise. Potential concerns will be addressed in the SEPA review for specific projects contained within the GSP.

Proposed measures to avoid or reduce such increases are:

The return of water supply as wastewater flows to the Puget Sound are addressed in the Wastewater Utility's NPDES operating permit. The Washington State Department of Ecology monitors compliance with permit conditions intended to avoid or mitigate impacts from these discharges.

2. How would the proposal be likely to affect plants, animals, fish, or marine life?

The scope of the GSP is unlikely to affect plants, animals, fish, or marine life. Any impacts associated with specific projects will be addressed in the individual project SEPA review process.

Proposed measures to protect or conserve plants, animals, fish, or marine life are:

Protections are afforded through SEPA review and compliance with the City's Environmentally Critical Areas regulations and the requirements of the Endangered Species Act, among other local, state, and federal regulations.

3. How would the proposal be likely to deplete energy or natural resources?

The GSP will not deplete energy or natural resources. Any concern of this nature will be addressed in the SEPA review for specific projects.

Proposed measures to protect or conserve energy and natural resources are:

N/A.

4. How would the proposal be likely to use or affect environmentally sensitive areas or areas designated (or eligible or under study) for governmental protection; such as parks, wilderness, wild and scenic rivers, threatened or endangered species habitat, historic or cultural sites, wetlands, floodplains, or prime farmlands?

This non-project action itself is not likely to use or affect environmentally sensitive areas or areas designated (or eligible or under study) for governmental protection. Any concern of this nature will be addressed in the SEPA review process for specific projects.

Proposed measures to protect such resources or to avoid or reduce impacts are:

The redevelopment of existing facilities will be accomplished in a manner consistent with the protection of environmentally sensitive areas and with measures to mitigate any potential impacts. Any concern of this nature will be addressed in the SEPA review process for specific projects.

5. How would the proposal be likely to affect land and shoreline use, including whether it would allow or encourage land or shoreline uses incompatible with existing plans?

The City's Comprehensive Plan was reviewed to ensure that this GSP is compatible with land and shoreline use. Existing land and shoreline uses are unlikely to be affected by projects laid out in the plan. However, any specific project's effect on land and shoreline use will be discussed in the SEPA review process.

Proposed measures to avoid or reduce shoreline and land use impacts are:

The GSP would not allow uses that are incompatible with existing land use plans. Any concern of this nature will be addressed in the SEPA review process on a project by project basis.

6. How would the proposal be likely to increase demands on transportation or public services and utilities?

The GSP is not likely to increase demands on transportation or public services and utilities.

Proposed measures to reduce or respond to such demand(s) are:

N/A.

7. Identify, if possible, whether the proposal may conflict with local, state, or federal laws or requirements for the protection of the environment.

The GSP is in accordance with local, state, and federal law, and the requirements for the protection of the environment.

APPENDIX D

Septic Property Count – September 2015

THIS PAGE INTENTIONALLY LEFT BLANK

NUMBER OF SEPTIC SYSTEMS IN CITY SERVICE AREA

1) IT pulled tax parcels that are shown within Springbrook (database) as being on septic (not paying wastewater charges) and created:
    a. A database with these parcels (788 parcels flagged as being on septic)
    b. A GIS layer with same.
2) CIP mapped, confirmed, identified parcels are within city service boundary:
    a. 10 properties fall outside the city service boundary. 7 of them will likely be served by the city system even though they are in Northshore – this is by mutual agreement that they are topographically best-served by the city (2012/13 communications). Leaves 785 parcels currently on septic served by Kirkland.
3) Selected all tax parcels within 50 feet of existing sewer main (465 parcels)
    a. Removed all selections that while within 50 feet, would require by code that parcel extend main to farthest property line – considered so prohibitively expensive as to make them essentially not have access to sewer (currently 37 properties)
4) **So the numbers are:**
    - 785 parcels currently on septic, within/served by City of Kirkland Wastewater System
    - 465 parcels have current access to wastewater system connection
    - 320 parcels currently do not have direct access to the wastewater system (either because they are too far away from a main, or they would likely have to expend a considerable amount of money to extend the main to their farthest property line per code before getting a connection permit, even though they at some property point, are within 50 feet of an existing main – could be some flexibility as determined by Development Engineering on a case-by-case basis)
    - 785/34 ~ 23 years to convert all septic to sewer (using the average calculated below)

This exercise used records that likely contain some errors, did not assess impediments to connection (topography, sensitive areas, easements needed, etc.), and utilized judgments about ability of some properties to connect to a nearby sewer main (see 3a above).

CONVERSIONS FROM SEPTIC TO SEWER

Data provided by Development Engineering (from City Permit Records – difficult to get anything earlier)

YEAR	Septic/New Sewer Connection (House Stays)	ESP Connections (from Overview)	Total Connection Average	New Sewer Connection (House Demoed)	Connections by Development (New Main, or Connection to Existing). Unable to say how many of these are also conversions from septic to sewer.
2015	15		15	117	102
2014	56		56	155	99
2013	40		40	133	93
2011		3	3		
2009		9	9		
2007		33	33		
2005		25	25		
2003		62	62		
2001		50	50		
1999		38	38		
AVG	37	31	33		
Average all Columns		**34**			
Data from EnerGov and provided by Development Eng (Katy C.)					

THIS PAGE INTENTIONALLY LEFT BLANK

APPENDIX E

Lift Station Flow Data, Domestic Wastewater Flow Projections, and I/I Analysis Data

THIS PAGE INTENTIONALLY LEFT BLANK

LIFT STATION WET WELL MEASUREMENTS

YARROW PT. LIFT STATION

Measurements to get:

1. Transducer to bottom of wet well: 7”
2. Low wet well float: 1’6”
3. Actual pump off measurement: 1.8’
4. Control panel readout pump off measurement: 2.0’
5. Actual lead pump on measurement: 2.6’
6. Control panel lead pump on measurement: 3.0’
7. Lag pump on measurement not measured
8. Inlet measurement: 4.2’
9. High wet well float measurement: 3’11”
10. Overflow measurement: 4.2’
11. Transducer/ control panel measurement level versus actual level (is the measurement different): 2.6’ actual, 3.0’ readout.
12. Wet well dimensions, width, length, height. Or diameter and height.
    6’ diameter x 6.1 ft. from catwalk to bottom, catwalk to top 48” diameter x 177” high
    Total depth = 20.8’ , 4.2’ - bottom to inlet invert
    Dry well dimensions – Pump room - 9’ x8’ x 7’10” high, Barrel – 14.5 ft. high by 6’ diameter. Total depth = 22.25’
13. Pump down test was conducted with the inflow diverted into V-3 (vactor truck).
    GPM calculations based on 211 gallons per foot of wet well, 3.14 x (36x36) X12 = 48833 cubic inches / 1728 cubic inches per cubic foot = 28.26 cubic feet x 7.48 gallons per cubic foot = 211 gallons per foot of wet well.
    Pump 1 - .5’ of drop in 60 seconds = 106 GPM
    Pump 2 - .55’ of drop in 60 seconds = 116 GPM
    Both pumps together - .6’ of drop in 60 seconds = 126 GPM.
14. Wet well capacity:
    Bottom of well to bottom of invert: 886 gallons
    Bottom of well to bottom of catwalk: 1287 gallons
    211 gallons per foot of wet well.
15. 2 – Cornell pumps, 6” pump inlet pumping into a single 6” force main.
    Pump cycle operates with a Yokogawa pump control and a pressure transducer that is monitored by a Magelis interface for telemetry and mechanical floats for backup.
    Station has a standby generator. There is no portable standby generator hookup or bypass pumping capability.

LIFT STATION WET WELL MEASUREMENTS

WAVERLY LIFT STATION

Measurements to get:

1. Transducer to bottom of wet well: 1.3’
2. Low wet well float: 1.1’
3. Actual pump off measurement: 2’
4. Control panel readout pump off measurement: 1.9’
5. Actual lead pump on measurement: 3.5’
6. Control panel lead pump on measurement: 3.5’
7. Lag pump on measurement: Telemetry 3.6’
8. Inlet measurement: 5.4’
9. High wet well float measurement: 5.1’
10. Overflow measurement 5.4’, same as inlet invert.
11. Transducer/ control panel measurement level versus actual level (is the measurement different) 3.75’ actual versus 3.7’ control panel.
12. Wet well dimensions, width, length, height. Or diameter and height:
    6’ diameter x 5.4’ to invert of inlet.
    Total depth 15.9’ to top of frame.
13. Pump down test, inflow pipe was plugged with a mechanical plug.
    GPM calculations based on 211 gallons per foot of wet well.
    Pump 1 – 1.35’ drop in 60 seconds = 285 GPM
    Pump 2 – 1.4’ drop in 60 seconds = 295 GPM
    Both pumps together – 2’ drop in 60 seconds = 422 GPM
    3.14x(36x36)x12 = 48833 cubic inches / 1728 cubic inches per cubic foot. = 28.26 cubic feet x 7.48 gal per cubic ft. = 211 gallons per foot
14. Wet well capacity:
    1141 gallons to invert of inflow.
    1352 gallons to top of inlet.
    211 gallons per foot of wet well.
15. 2 – HOMA submersible pumps. Pump cycles operate through transducer level monitored by the Magelis interface and telemetry with mechanical float backup.
    12” inlet pipe, 2 – 6” force mains that Y into 1 - 8” force main.
    Station has backup standby generator, a hookup for a portable generator if standby generator fails and bypass pump capability.

LIFT STATION WET WELL MEASUREMENTS

TREND LIFT STATION

Measurements to get:

1. Transducer to bottom of wet well: Transducer sits on bottom of the wet well.
2. Low wet well float: 15”
3. Actual pump off measurement: 16.5”
4. Control panel readout pump off measurement: 44
5. Actual lead pump on measurement: 31”
6. Control panel lead pump on measurement: 56.5
7. Lag pump on measurement: High Float, 36”
8. Inlet measurement: 2 inlets – 56” and 45”
9. High wet well float measurement: 36”
10. Overflow measurement: 45”
11. Transducer/ control panel measurement level versus actual level (is the measurement different): ON control panel - 56.5, actual – 31”; OFF control panel – 44, actual – 16.5”
12. Wet well dimensions, width, length, height. Or diameter and height. bottom of wet well to catwalk: 72” diameter x 72” high; barrel – bottom of throat to catwalk, 48” diameter x 134” high; frame and cover/throat, 24” diameter x 26” high. Total depth from frame and cover to bottom of wet well – 232” or 19’4”.
13. Both inflow pipes were plugged with mechanical plugs
    GPM calculations based on 211 gallons per foot of wet well.
    Pump 1 – 1’ drop in 60 seconds = 211 GPM
    Pump 2 – 1’ drop in 60 seconds = 211 GPM
    Both pumps together – 1’ drop in 60 seconds = 211 GPM
    3.14 x (36)x(36) x 12” = 48833 cubic inches / 1728 cubic inches per cubic ft. = 28.26 cubic feet x 7.48 gal per cubic ft. = 211 GPM
14. Wet well capacity: 792 gallons.
15. 2 – Cornell pumps with ball check valves. 2 – 4” inflow pipes, 1 – 4” force main.
    Pump cycles operate with Yokogawa pump controls and a pressure transducer that is monitored by a Rugid computer for telemetry. Backup system is mechanical floats.
    Station doesn’t have standby generator power, a portable generator needs to be hooked up if power fails.
    Station doesn’t have bypass pumping capability.

LIFT STATION WET WELL MEASUREMENTS

SOUTH BAY LIFT STATION

Measurements to get:

1. Transducer to bottom of wet well. 6” to top side of “V”, 16” to bottom of “V”
2. Low wet well float : 2’, control panel readout : 1’
3. Actual pump off measurement : 2.5’
4. Control panel readout pump off measurement : 1.5’
5. Actual lead pump on measurement : 4’
6. Control panel lead pump on measurement : 2.7’
7. Lag pump on measurement : High Float
8. Inlet measurement : 4’
9. High wet well float measurement : 5’6”, control panel readout : 4.2’
10. Overflow measurement : 29” from overflow inlet invert to bottom of channel invert in manhole that feeds wet-well.
11. Transducer/ control panel measurement level versus actual level (is the measurement different) : Control panel : 2.7, actual : 4’
12. Wet well dimensions, width, length, height. Or diameter and height. Primary wet-well : 8’L x 3’W x 8’4”H = 1495 Gal capacity; Secondary wet-well : 12’9”L x 15’W x 12’3”H total, 5’11”H to inlet invert = 7033 gal capacity to inlet invert. Barrel section : 3’W x 3’L x 46”H, total depth of secondary wet-well = 193” or 16’.;
    Dry-well measurements : Control room : 9’L x 8’W x 8’3”H, Barrel 4’W x 4’L x 8’4”, Total depth = 16’7”
13. 8’x3’x1’ = 24 cubic feet x 7.48 gal per cubic feet = 179.5 gallons per foot.
    Inflow plugged with a mechanical plug
    Pump 1 – measured @ 60 seconds – 3.5’ pumped down to 2.6’=.9’x179.5Gal = 161 GPM
    Pump 2 – measured @ 60 seconds – 3.5’ pumped down to 2.5’=1’x179.5Gal = 179.5GPM
    Both pumps together measured @ 60 seconds – 5.5’ pumped down to 5’ = .5’ x 179.5 Gal = 89.75 GPM
14. 2 – Cornell pumps with ball check valves, 2 – 4” inflow pipes, 1 – 6” force main. Pump cycles operate with Yokogawa pump controls and a pressure transducer monitored by a Magelis interface for telemetry that sends its signal through Yarrow Pt. via radio read. Backups are mechanical floats.
15. Station has a secondary wet well which has 1 inflow, suction sits on bottom of well. Station doesn’t have standby generator, if power fails, a portable generator must be hooked up.
    Station doesn’t have bypass pumping capability.

LIFT STATION WET WELL MEASUREMENTS

ROSE PT. LIFT STATION

Measurements to get:

1. Transducer to bottom of wet well: 1’
2. Low wet well float: 1’
3. Actual pump off measurement: 1.8’
4. Control panel readout pump off measurement: 18.5
5. Actual lead pump on measurement: 2.75’
6. Control panel lead pump on measurement: 30.0
7. Lag pump on measurement: Not measured.
8. Inlet measurement: 3’2”
9. High wet well float measurement: 3.5’
10. Overflow measurement: 3’2”, same as inlet invert.
11. Transducer/ control panel measurement level versus actual level (is the measurement different): 2.75’ or 33” actual versus 30.0 control panel.
12. Wet well dimensions, width, length, height. Or diameter and height:
    Wet well – 3’w x 6’l x 7’ and 7’8”deep, from catwalk to bottom, (floor is angled deeper to the west). 3’ x 6’ x 7’9” above catwalk = 15.41’ total depth.
    Dry well dimensions – pump room floor to catwalk 6’2” x 6’5” x 8’, catwalk to top of frame 6’2” x 6’5” x 7’9” = 15.75’ total depth.
13. Pump down test was conducted with inflow plugged with a mechanical plug.
    GPM calculations based on 135 gallons per foot of wet well, 3’ x 6’ x 1’ = 18 cubic ft. x 7.48 gallons per cubic foot. = 135.
    Pump 1: 2.2’ drop in 60 seconds = 297 GPM
    Pump 2: 2.25’ drop in 60 seconds = 303 GPM
    Both pumps together: 2.5’ drop in 60 seconds = 337.5 GPM
14. Wet well capacity: 426 gallons to invert of inlet
    987 gallons to bottom of catwalk
    135 gallons per foot of wet well.
15. 2 – CRAME-DEIMING pumps, pump cycles operate off of Yokogawa pump controls and a pressure transducer, monitored by a Magelis interface for telemetry with mechanical floats as backup. 1 - 6” force main, 8” inflow.
    Station doesn’t have a standby generator, if power fails, a portable generator must be hooked up to the station. Station can be bypass pumped into the downstream manhole (Manhole I.D. #1) adjacent to 1803 10th St W. in an emergency.

LIFT STATION WET WELL MEASUREMENTS

LK. PLAZA LIFT STATION

Measurements to get:

1. Transducer to bottom of wet well: 1”
2. Low wet well float
3. Actual pump off measurement: 4.5’
4. Control panel readout pump off measurement: 2.5
5. Actual lead pump on measurement: 7.45’
6. Control panel lead pump on measurement: 5.0
7. Lag pump on measurement: Readout – 5.5, Actual 8.0 Lag pump didn’t start.
8. Inlet measurement: 74” from floor to bottom of inlet, 16” inlet pipe.
9. High wet well float measurement
10. Overflow measurement 10.86’. Overflow is in manhole #1036, overflows into the secondary wet well.
11. Transducer/ control panel measurement level versus actual level (is the measurement different): 5.0 versus 7.45’
12. Wet well dimensions, width, length, height. Or diameter and height: See notes last 2 pages. Total dimensions are 34.5’ x 4’ x18.5’ high. The operating area from the catwalk down to the floor is separated by a weir that has a beaver slide under the inlet pipe. The dimensions of the area behind the weir on the inlet side are: 7.5’ x 4’, the weir is 3’4” from the floor to 7’ above the floor and is 12” thick. The pump side of the operating area is 27’ x 4’ x 10’2” high to the top of the catwalk. There are also 3 columns that protrude into the wet well area whose dimensions are 36’ wide on one side and 24” wide on the other by 12” deep.
    Secondary wet well dimensions are: 8’ x 8’ x 12’4” high. Barrel 3’ x 3’ x7’8”. Total 20’deep
    Inlet invert: 4’8”, 16” inlet, outlet pickup to pump 1: 2’2”, floor to invert, 8” pipe.
    Secondary wet well floats: Alarm float 10”, low float 3’6”, high float 6’.
13. Pump down test: Test was performed with the inflow diverted to the secondary wet well.
    GPM calculations based on 890 gallons per foot of wet well, (see notes last 2 pages).
    Pump down @ 1 minute run time
    Pump 1 solo – Start 7’, Stop 6.1’ = .9’ x 890 = 801 GPM
    Pump 1, 2 together – Start 6.8’, Stop 5.5’ = 1.3’ x 890 = 1157 GPM
    Pump 1, 3 together – Start 6.8’, Stop 5.5’ = 1.3’ x 890 = 1157 GPM
    Pump 2 solo – Start 6.8’, Stop 5.9’ = .9’ x 890 = 801 GPM

Pump 2, 3 together – Start 6.9’, Stop 5.5’ = 1.4’ x 890 = 1246 GPM
Pump 3 solo – Start 6.8’, Stop 5.9’ = .9’ x 890 = 801 GPM

14. Wet well capacity: approximately 890 gallons per foot of wet well
    9665 gallons to overflow @ 10.86’
    9048 gallons to top of catwalk
    6630 gallons to start of normal pump cycle
    4005 gallons at shut off of normal pump cycle
    3.27 minutes of run time per cycle @ 801 GPM
15. Station has 3 – WMCO pumps. The pumps alternate 1, 2, 3, to keep run times as even as possible. Pump cycles operate through a Yokogawa pump controller and pressure transducer monitored by a Magelis interface for telemetry with mechanical floats as backup. The pumps can be turned off and on remotely from the Maintenance Center and Telemetry laptop computer.
    The station has a secondary wet well for emergencies that can be used to operate the station with mechanical floats but can only pump through pump #1.
    Force main is 8” ductile iron, pump inlets are 8”. Inflow inlet to both primary and secondary wet wells is 16”. Primary wet well can be isolated from the secondary by shutting the valve between manhole 1036 and primary wet well hatch in the sidewalk.
    Station has a backup standby generator, a hookup for a portable generator if the standby generator fails and bypass pump capability.

City of Kirkland Lift Station Flow Data

Year	Description	Lift Station					
		Lake Plaza	Rose Point	South Bay	Trend	Waverly Park	Yarrow Bay II
---	Sewered Area (acres)	140	25	7	19	45	8
2008	Maximum Day Flow (gpd)	486,000	21,600	7,560	7,392	28,764	5,538
	Average Annual Flow (gpd)	243,000	14,400	4,320	5,280	20,304	4,260
	Minimum Day Flow (gpd)	229,500	10,800	2,160	4,224	16,920	3,834
	Maximum Day Flow Peaking Factor	2.00	1.50	1.75	1.40	1.42	1.30
	Maximum Day I/I per Sewered Area Quotient (gpad)	1,829	433	791	168	260	214
2009	Maximum Day Flow (gpd)	436,500	43,200	10,800	17,952	77,832	6,390
	Average Annual Flow (gpd)	283,500	14,400	8,640	8,448	33,840	5,112
	Minimum Day Flow (gpd)	211,500	10,800	6,480	5,280	23,688	4,260
	Maximum Day Flow Peaking Factor	1.54	3.00	1.25	2.13	2.30	1.25
	Maximum Day I/I per Sewered Area Quotient (gpad)	1,604	1,298	633	672	1,191	268
2010	Maximum Day Flow (gpd)	495,000	106,200	17,280	28,512	155,664	9,372
	Average Annual Flow (gpd)	270,000	21,600	4,320	8,448	27,072	5,112
	Minimum Day Flow (gpd)	207,000	10,800	2,160	7,392	21,996	4,260
	Maximum Day Flow Peaking Factor	1.83	4.92	4.00	3.38	5.75	1.83
	Maximum Day I/I per Sewered Area Quotient (gpad)	2,054	3,821	2,216	1,119	2,939	643
2011	Maximum Day Flow (gpd)	454,500	28,800	10,800	12,672	87,984	5,964
	Average Annual Flow (gpd)	216,000	10,800	4,320	6,336	27,072	4,260
	Minimum Day Flow (gpd)	193,500	7,200	2,160	5,280	23,688	3,408
	Maximum Day Flow Peaking Factor	2.10	2.67	2.50	2.00	3.25	1.40
	Maximum Day I/I per Sewered Area Quotient (gpad)	1,861	865	1,266	392	1,414	322
2012	Maximum Day Flow (gpd)	648,000	59,400	19,440	22,176	159,048	5,964
	Average Annual Flow (gpd)	256,500	14,400	4,320	6,336	30,456	4,686
	Minimum Day Flow (gpd)	225,000	10,800	3,240	5,280	23,688	3,834
	Maximum Day Flow Peaking Factor	2.53	4.13	4.50	3.50	5.22	1.27
	Maximum Day I/I per Sewered Area Quotient (gpad)	3,016	1,946	2,374	895	2,977	268
2013	Maximum Day Flow (gpd)	481,500	30,600	10,800	14,784	59,220	8,520
	Average Annual Flow (gpd)	243,000	18,000	4,320	8,448	27,072	4,260
	Minimum Day Flow (gpd)	198,000	14,400	3,240	5,280	21,996	3,408
	Maximum Day Flow Peaking Factor	1.98	1.70	2.50	1.75	2.19	2.00
	Maximum Day I/I per Sewered Area Quotient (gpad)	2,022	649	1,108	504	819	643
2014	Maximum Day Flow (gpd)	414,000	54,000	11,880	19,008	106,596	10,650
	Average Annual Flow (gpd)	229,500	21,600	4,320	8,544	37,224	4,260
	Minimum Day Flow (gpd)	184,500	18,000	3,240	6,336	27,072	3,408
	Maximum Day Flow Peaking Factor	1.80	2.50	2.75	2.22	2.86	2.50
	Maximum Day I/I per Sewered Area Quotient (gpad)	1,637	1,442	1,266	672	1,749	911

City of Kirkland Domestic Wastewater Flow Projections

Year	Total City Population	City Sewer Service Area Population[1]	Domestic AAF per Capita (gpcd)	Residential Domestic AAF (gpd)	City Sewer Service Area Employees[2]	Domestic AAF per Employee (gped)	Commercial Domestic AAF (gpd)	Total Domestic AAF (gpd)	Domestic AAF per ERU (gpd per ERU)	Residential ERUs	Commercial ERUs	Total ERUs
2014	**82,590**	**29,481**	**63**	**1,870,709**	**30,124**	**18**	**541,418**	**2,412,128**	**136**	**13,712**	**3,969**	**17,681**
2015	83,460	28,509	76	2,166,684	30,878	20	617,551	2,784,234	155	13,975	3,983	17,958
2016	84,093	29,114	76	2,212,686	31,631	20	632,622	2,845,308	155	14,272	4,080	18,352
2017	84,727	29,720	76	2,258,689	32,385	20	647,692	2,906,381	155	14,568	4,178	18,746
2018	85,360	30,325	76	2,304,691	33,138	20	662,763	2,967,454	155	14,865	4,275	19,140
2019	85,993	30,930	76	2,350,694	33,892	20	677,834	3,028,528	155	15,162	4,372	19,534
2020	86,627	31,535	76	2,396,696	34,645	20	692,905	3,089,601	155	15,459	4,469	19,928
2021	**87,260**	**32,141**	**76**	**2,442,699**	**35,399**	**20**	**707,975**	**3,150,674**	**155**	**15,755**	**4,566**	**20,322**
2022	87,893	32,629	76	2,479,831	36,132	20	722,647	3,202,478	155	15,995	4,661	20,656
2023	88,526	33,118	76	2,516,963	36,866	20	737,319	3,254,282	155	16,234	4,756	20,990
2024	89,160	33,607	76	2,554,095	37,600	20	751,991	3,306,086	155	16,474	4,850	21,324
2025	89,793	34,095	76	2,591,227	38,333	20	766,663	3,357,890	155	16,713	4,945	21,658
2026	90,405	34,584	76	2,628,359	39,067	20	781,334	3,409,693	155	16,953	5,040	21,992
2027	91,017	35,072	76	2,665,491	39,800	20	796,006	3,461,497	155	17,192	5,134	22,326
2028	91,629	35,561	76	2,702,623	40,534	20	810,678	3,513,301	155	17,432	5,229	22,661
2029	92,241	36,049	76	2,739,755	41,267	20	825,350	3,565,105	155	17,671	5,323	22,995
2030	92,853	36,538	76	2,776,887	42,001	20	840,022	3,616,909	155	17,911	5,418	23,329
2031	93,465	37,027	76	2,814,019	42,735	20	854,694	3,668,712	155	18,150	5,513	23,663
2032	94,077	37,515	76	2,851,151	43,468	20	869,365	3,720,516	155	18,390	5,607	23,997
2033	94,689	38,004	76	2,888,283	44,202	20	884,037	3,772,320	155	18,629	5,702	24,331
2034	95,301	38,492	76	2,925,415	44,935	20	898,709	3,824,124	155	18,869	5,797	24,665
2035	**95,913**	**38,981**	**76**	**2,962,547**	**45,669**	**20**	**913,381**	**3,875,928**	**155**	**19,108**	**5,891**	**25,000**

NOTES:
*These projections include the City's NE 124th Street 124th Street Sewer Drainage Basin, which was assumed by Northshore in 2018.
1. Existing multi-family residential population in the sewer service area is estimated based on average single-family residential winter water consumption per connection and total multi-family residential winter water consumption.
2. No data is available for the number of employees in the City's sewer service area in 2013 or 2014. The number of employees in 2013 are the employees in the City limits, which include the annexation areas that are not in the City's sewer service area. The number of employees in 2014 are assumed to be the same as 2012 since there was a slight decrease in the number of commercial accounts.
-AAF = Average Annual Flow
-ERU = Equivalent Residential Unit
-gpcd = gallons per capita per day
-gpd = gallons per day
-gped = gallons per employee per day

2010 King County 20-year Peak Hour Sewer I/I Flow Rate Data

2010 King County Sewer Drainage Basin	2010 I/I (gpad)
M_ESI14058	5,180
M_ESI9032	3,871
M_HOLMS001A	1,396
M_KRK001	6,541
M_KRK004	4,937
M_KRK008	9,218
M_KRK010	8,453
M_KRK012	8,463
M_KRK015	3,584
M_MEDNT001	5,071
M_NLKS013	2,178
M_NUD029	3,641
M_NWLKS001	2,019
M_SAMVL110_S	1,584

2010 King County Sewer Drainage Basins Area Data

2010 King County Sewer Drainage Basin	Sewered Area (acres)	Potentially Sewered Area (acres)	Not Sewerable Area (acres)	Total Area (acres)
M_ESI14058	1,383.0	232.9	316.7	1,932.6
M_ESI9032	42.2	57.5	94.4	194.1
M_HOLMS001A	11.6	0.0	0.0	11.6
M_KRK001	205.1	13.8	19.2	238.0
M_KRK004	576.8	61.8	197.9	836.5
M_KRK008	857.1	8.5	60.0	925.6
M_KRK010	118.3	0.0	10.4	128.7
M_KRK012	75.3	6.0	51.7	133.0
M_KRK015	541.8	163.7	93.6	799.1
M_MEDNT001	6.8	15.4	20.0	42.2
M_NLKS013	0.6	4.3	0.0	4.9
M_NUD029	46.5	10.3	3.8	60.6
M_NWLKS001	2.1	2.5	0.0	4.6
M_SAMVL110_S	0.7	1.5	0.0	2.2

City of Kirkland 20-year Peak Hour Sewer I/I Flow Rate Calculations

City of Kirkland Sewer Drainage Basin	2010 King County Sewer Drainage Basin	Sewered Area (acres)	Potentially Sewered Area (acres)	Not Sewerable Area (acres)	Total Area (acres)	2010 County Basin I/I (gpad)	Existing (2014) City Basin I/I (gpd)	Existing (2014) City Basin I/I Total (gpd)	2021 Potentially Sewered Area I/I (gpad)	2021 Projected City Basin I/I (gpd)	2021 Projected City Basin I/I Total (gpd)	2035 Potentially Sewered Area I/I (gpad)	2035 Projected City Basin I/I (gpd)	2035 Projected City Basin I/I Total (gpd)
116th Avenue NE	M_ESI9032	33.6	57.4	27.4	118.3	3,871	129,967	**130,474**	600	164,389	**164,899**	2,000	244,706	**245,225**
	M_ESI14058	0.1	0.0	5.5	5.6	5,180	506			510			519	
Eastside Interceptor	M_ESI14058	1,382.6	232.9	303.8	1,919.3	5,180	7,161,518	**10,401,916**		7,301,256	**10,652,750**		7,627,313	**11,238,029**
	M_ESI9032	0.6	0.2	61.6	62.3	3,871	2,200			2,291			2,502	
	M_KRK001	187.0	13.8	19.2	219.9	6,541	1,222,943			1,231,193			1,250,444	
	M_KRK004	6.2	0.0	7.7	13.9	4,937	30,753			30,753			30,753	
	M_KRK008	0.8	0.3	0.2	1.3	9,218	7,012			7,213			7,681	
	M_KRK010	3.2	0.0	1.9	5.1	8,453	27,269			27,269			27,269	
	M_KRK012	0.3	0.0	0.0	0.3	8,463	2,618			2,618			2,618	
	M_KRK015	541.7	163.7	92.7	798.1	3,584	1,941,634			2,039,858			2,269,049	
	M_NLKS013	0.6	4.3	0.0	4.9	2,178	1,264			3,841			9,852	
	M_NUD029	0.1	0.0	0.0	0.1	3,641	446			446			446	
	M_NWLKS001	2.1	2.5	0.0	4.6	2,019	4,259			5,738			9,188	
	M_SAMVL110_S	0.0	0.5	0.0	0.5	1,584	0			274			914	
Juanita	M_ESI14058	0.0	0.0	1.1	1.1	5,180	70	**2,654,827**		70	**2,691,234**		70	**2,776,184**
	M_HOLMS001A	0.2	0.0	0.0	0.2	1,396	307			307			307	
	M_KRK004	535.0	60.7	137.4	733.1	4,937	2,641,546			2,677,941			2,762,862	
	M_KRK008	0.8	0.0	0.0	0.8	9,218	7,034			7,034			7,034	
	M_KRK015	0.0	0.0	0.9	0.9	3,584	60			60			60	
	M_NUD029	1.6	0.0	0.0	1.6	3,641	5,811			5,823			5,851	
Juanita Bay	M_HOLMS001A	11.4	0.0	0.0	11.4	1,396	15,886	**21,198**		15,886	**21,200**		15,886	**21,205**
	M_KRK004	1.1	0.0	0.0	1.1	4,937	5,312			5,314			5,319	
Kirkland	M_ESI14058	0.3	0.0	6.0	6.3	5,180	1,485	**6,212,415**		1,503	**6,217,548**		1,543	**6,229,526**
	M_KRK004	5.6	1.0	9.2	15.8	4,937	27,713			28,314			29,718	
	M_KRK008	670.8	7.5	42.1	720.4	9,218	6,183,216			6,187,731			6,198,265	
Lake Plaza	M_KRK008	137.2	0.7	13.3	151.2	9,218	1,264,873	**1,290,340**		1,265,275	**1,290,742**		1,266,213	**1,291,680**
	M_KRK010	3.0	0.0	0.0	3.0	8,453	25,467			25,467			25,467	
Rose Point	M_KRK004	24.8	0.0	43.3	68.1	4,937	122,474	**123,978**		122,474	**123,978**		122,474	**123,978**
	M_KRK008	0.2	0.0	0.0	0.2	9,218	1,504			1,504			1,504	
South Bay	M_MEDNT001	6.8	6.1	2.1	15.1	5,071	34,596	**34,596**		38,285	**38,285**		46,894	**46,894**
Trend	M_KRK001	18.2	0.0	0.0	18.2	6,541	118,811	**119,927**		118,811	**120,533**		118,812	**121,947**
	M_SAMVL110_S	0.7	1.0	0.0	1.7	1,584	1,116			1,722			3,136	
Watershed Park	M_ESI9032	8.0	0.0	4.0	12.0	3,871	31,016	**31,016**		31,016	**31,016**		31,016	**31,016**
Waverly Park	M_KRK004	2.7	0.0	0.0	2.7	4,937	13,513	**407,456**		13,513	**407,456**		13,513	**407,456**
	M_KRK008	42.7	0.0	4.4	47.1	9,218	393,943			393,943			393,943	
Yarrow Bay	M_ESI14058	0.0	0.0	0.3	0.3	5,180	0	**1,556,817**		0	**1,565,965**		0	**1,587,310**
	M_ESI9032	0.0	0.0	1.4	1.4	3,871	2			2			2	
	M_KRK008	4.6	0.0	0.0	4.6	9,218	42,492			42,492			42,492	
	M_KRK010	112.0	0.0	8.5	120.5	8,453	947,074			947,074			947,074	
	M_KRK012	67.0	6.0	48.8	121.8	8,463	567,249			570,872			579,323	
	M_MEDNT001	0.0	9.2	17.9	27.1	5,071	0			5,526			18,419	
Yarrow Bay II	M_KRK012	7.9	0.0	2.9	10.8	8,463	67,271	**67,271**		67,273	**67,273**		67,279	**67,279**

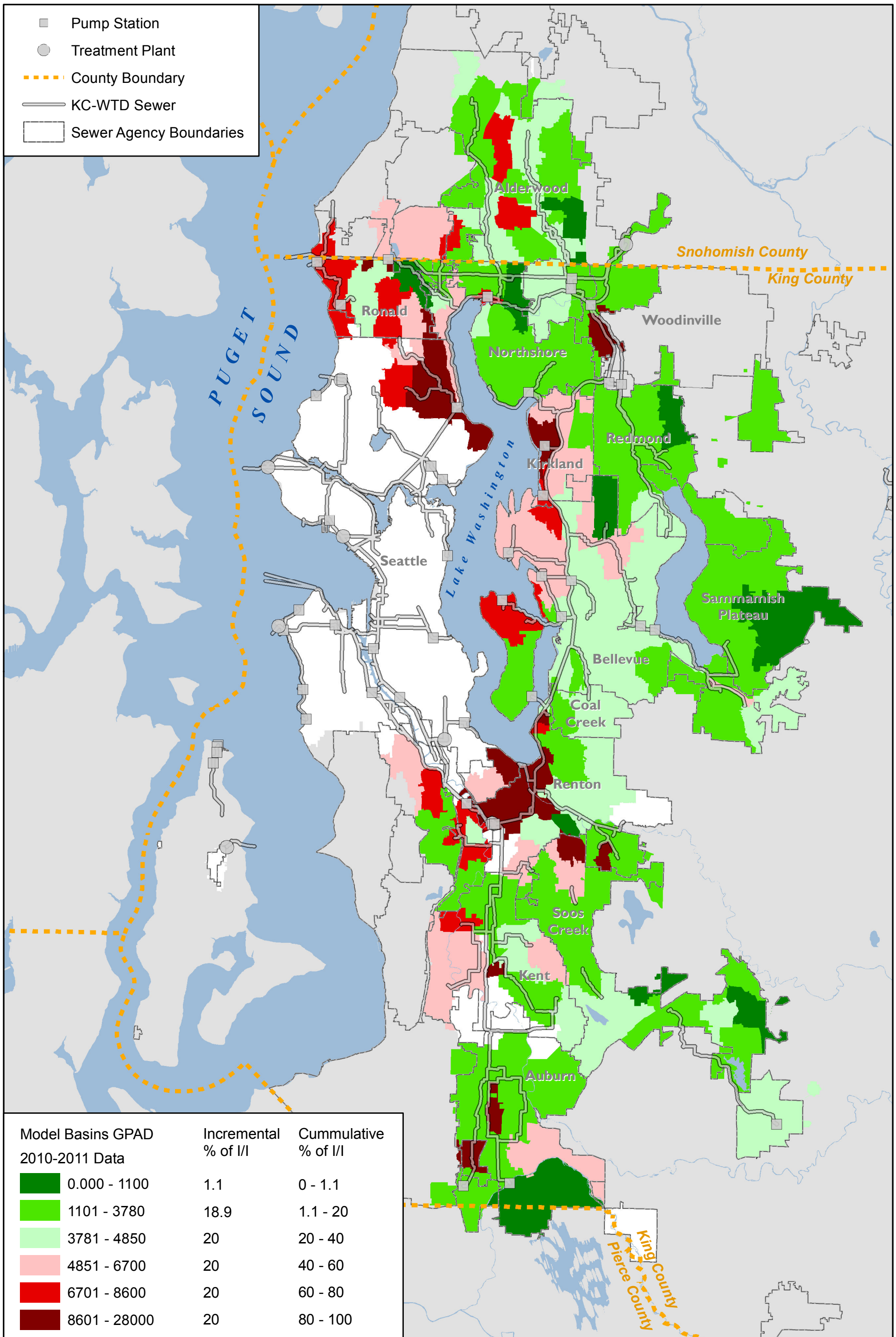

Model Basins GPAD 2010-2011 Data	Incremental % of I/I	Cummulative % of I/I
0.000 - 1100	1.1	0 - 1.1
1101 - 3780	18.9	1.1 - 20
3781 - 4850	20	20 - 40
4851 - 6700	20	40 - 60
6701 - 8600	20	60 - 80
8601 - 28000	20	80 - 100

King County
Department of Natural Resources and Parks
Wastewater Treatment Division

N

2 1 0 2
Miles

October 2015

The information included on this map has been compiled from a variety of sources and is subject to change without notice. King County makes no representations or warranties, express or implied, as to accuracy, completeness, timeliness, or rights to the use of such information. This document is not intended for use as a survey product. King County shall not be liable for any general, special, indirect, incidental, or consequential damages including, but not limited to, lost revenues or lost profits resulting from the use or misuse of the information contained on this map. Any sale of this map or information on this map is prohibited except by written permission of King County.

File Name: Q:\WTD\Projects\II_Study\Projects\MdlBsnGPAD_20yrPeak_20150522.mxd oneilsh

WORKING DRAFT

Maximum Calculated 20-Year Peak I/I Hourly Flow Rates
2010-2011 Data

City of Bellevue's Yarrow Point Sewer Drainage Basin (Basin No. 6) Flows

Description	From City of Bellevue's 2014 Wastewater System Plan		Estimated Flows		
	2012 (Existing)	Projected 2030	2014 (Existing)	Projected 2021	Projected 2035
Average Daily Sanitary Flow (gpm)	182	196	184	189	200
Peak Sanitary Flow (gpm)	364	392	367	378	400
Peak I/I (gpm)	973	973	973	973	973
Total Peak Flow (gpm)	1,337	1,365	1,340	1,351	1,373

APPENDIX F

Sanitary Sewer Pre-Approved Notes, Design Criteria, and Plans

THIS PAGE INTENTIONALLY LEFT BLANK

INDEX

SANITARY SEWER POLICIES

S-1 Requirements for Construction near Lakefront Sewer Line

S-2 Closed Circuit Camera Requirements for Sewer Mains

SANITARY SEWER PRE-APPROVED NOTES, DESIGN CRITERIA, & PLANS

Sanitary Sewer - Plan Notes .....1 - 2
Sanitary Sewer - Design Criteria .....3 - 9
Sanitary Sewer Trench Detail S.01
Water and Sewer Spacing and Clearance S.02
Pipe Bedding S.03
Soil/Cement Pipe Anchor S.04
Casing Installation S.05
Sampling Tee S.06
Check Valve Assembly for Joint Use Side Sewer (4 to 8-inch Diameter) S.07
Sewer Main Bypass Plug S.08
Standard 48" Sanitary Sewer Manhole S.09
Shallow Manhole Assembly S.10
Extra Shallow Manhole Assembly S.11
Sanitary Sewer Internal Drop Connection S.12
Sewer Manhole Main Channel and Shelf S.13
Ladder and Manhole Steps S.14
24" Manhole Ring and Cover S.15
24" Manhole Frame With Locking Cover S.16
Modified 24" Manhole Frame With Locking Cover S.16A
Cleanout S.17
Side Sewer Marker Post S.18
Side Sewer Stub "Profile View" S.19
Side Sewer Stub "Plan View".....S.19A

Residential Side Sewer Installation S.20
Single-Family Sewer Lift Station - Simplex System S.21
Commercial and Multifamily Sewer Lift Station - Duplex System S.22
100-Gallon Baffle Type Oil/Water Separator S.23
450-Gallon Baffle Type Oil/Water Separator S.24
800- & 1,000-Gallon Baffle Type Oil/Water Separator S.25
Manhole Frame and Grate Adjustment S.26
Paved Vehicle Service Area Drainage Detail S.27
Single Family Simplex Sewer Lift Station Gravity / Force Main Connection S.28
Shallow Force Main Connection.....S.28A
Grease Interceptor S.29

SANITARY SEWER - PLAN NOTES

1. A pre-construction conference shall be held prior to the start of construction. The Contractor shall be responsible for securing all necessary permits prior to construction.

2. All construction and materials shall conform to City of Kirkland Department of Public Works and current WSDOT/APWA standards and specifications for road, bridge, and municipal construction.

3. Approximate locations of existing utilities have been obtained from available records and are shown for convenience. The Contractor shall be responsible for verification of the locations shown and for discovery of possible additional utilities not shown so as to avoid damage or disturbance. The underground utility location service shall be contacted for field location prior to any construction. The owner or his representative shall be contacted if a utility conflict exists. For utility location in King County, call 1-800-424-5555. The Contractor is responsible to ensure that utility locates are maintained throughout the life of the project.

4. It shall be the Contractor's responsibility to coordinate his activities with local utility companies to ensure that all utilities are installed according to these plans and the requirements of the individual utility companies.

5. All manholes shall conform to WSDOT/APWA standards, eccentric cones with manufacturer-approved gaskets and 1/2" polypropylene-encapsulated safety steps and ladders. All manholes shall have cast iron rings and ductile iron covers. Lids shall have 2" raised letters marked "SEWER." All cleanouts shall have cast iron rings and covers marked "CO" that are in paved areas.

6. All side sewers shall be tested for acceptance at the same time the main sewer is tested. Side sewer locations shall be verified in the field prior to construction and backfilling. All side sewers shall be capped with a watertight plug, have a cleanout and test tee installed, and shall be marked for location with a 2" x 4" stake painted white, marked sewer, with 3' exposed, and the depth of the cap written on the stake. See Standard Detail S.18. The stake shall be secured to the end of the plug with wire a minimum of 16 gauge. Initial side sewer installation shall run to the property line. The remaining side sewer shall not be installed until testing and acceptance of the sewer trunk line by the City of Kirkland is completed. Number and location of side sewers shown are approximate only and may be changed as required during construction. Contractor shall notify Engineer when exact locations are determined and provide the Engineer and the City of Kirkland Department of Public Works with an as-built. If approved by the Public Works Department, all double-sided sewer wyes must be at the property line.

7. All main-line trenches shall be compacted prior to testing sewer lines for acceptance.

8. Pressure testing of gravity sewer mains shall conform to the following standards: (1) air testing will require a minimum of 4 psi for 15 minutes with no pressure drop; (2) water testing will require a minimum of 10' of head in a standpipe at the test location for 15 minutes with no drop in the water level in the standpipe. Either test is acceptable.

9. Pressure testing of force mains and laterals will require an air test of 25 psi minimum for 15 minutes with no pressure drop.

10. New connections to existing manholes or sewer lines shall be sealed off until upstream construction is finished, tested, cleaned, and accepted. All construction debris and water shall be removed prior to opening the seal.

11. All PVC sewer pipe and fittings shall meet the requirements of ASTM Specifications D-3034 for 4" to 15" diameter and ASTM F679 for 18" to 27" diameter. Pipe shall be SDR-35 and shall conform to standard specifications. Bedding and backfill shall meet WSDOT and APWA specifications.

12. Minimum slope for side sewers shall be two percent (2%).

13. An approved copy of the sewer plan must be on site whenever construction is in progress.

14. Prior to construction of sewer lines, the necessary lot corners must be set, and the Contractor shall be responsible for the verification of the location of pipes, manholes, and invert elevations.

15. Pipe anchors, if used, shall be installed: not over 36' center to center on grades from 20 percent to 35 percent; not over 24' center to center on grades from 35 percent to 50 percent; and not over 16' center to center on grades 50 percent and greater.

16. All manholes shall have a minimum of 0.10' to a maximum of 1.00' drop between invert in and invert out.

17. PVC sewer pipe shall be tested for deflection according to WSDOT/APWA specifications.

18. All trench backfill shall be compacted to 95 percent density in roadways, roadway shoulders, roadway prism and driveways, and 85 percent density in unpaved areas. All pipe zone compaction shall be 95 percent.

19. It shall be the responsibility of the Contractor to adjust all manhole lids and cleanout lids to match final asphalt elevations in roadways or ground elevations in landscaped areas.

20. When tying into existing manholes that are below minimum standards, the existing manhole must be upgraded to meet current standards.

21. All new sewer main extensions shall be videoed prior to final acceptance.

SANITARY SEWER - DESIGN CRITERIA

I. MATERIALS

A. Pipe

1. PVC pipe shall conform to the provisions of ASTM D-3034 for SDR-35 wall thickness. Pipe joints shall be rubber gasket type. Solvent cement joints shall not be used.

2. Pipe fittings shall be furnished with bells and spigots which are integral with the pipe wall.

3. PVC pipe for force mains and laterals shall be Schedule 40 with glue joints. Run tracer wire along length of force main/lateral pipe.

4. Ductile iron pipe, Class 50, shall be used when minimum cover or minimum separation from water main cannot be obtained.

B. Manhole

1. Concrete manhole adapters shall be Kor-n-seal boot or an approved equal.

2. Manholes shall be pre-cast and shall conform to Standard Plan No. S.09, S.10, and S.11. All holes for inlet and outlet pipe shall be blocked out when manhole sections are cast.

3. Ladder rungs and steps shall be 1/2" polypropylene-coated, safety-type step, 12" minimum width. Ladder side bars shall be 9/16" round bar, polypropylene coated (see Standard Plan No. S.14).

4. Manhole frames shall be cast iron and covers shall be ductile iron with a combined weight of not less than 360 pounds, and shall have a minimum clear opening of 23-3/4". Frames and covers shall be equal to Olympic Foundry MH 30D/T. Cover to be marked "SEWER" in 2" raised letters. In unimproved areas and easements, manhole shall extend a minimum of 6" and a maximum of 18" above grade. Manhole ring cover shall have three recessed 5/8" x 1-1/4" stainless steel socket head cap screws for locking.

5. Reducing cones shall provide an eccentric reduction from 48" to 24" and shall not be less than 17" in height.

6. Manhole sections shall be jointed with flexible joint using rubber gaskets conforming to ASTM C443. Joints shall be watertight.

II. JOINTING

A. Care shall be taken in making all joints in order to secure complete watertightness.

B. Deflection in the pipe shall not be allowed either vertically or horizontally unless instructed by the Engineer. If a deflection is necessary, as determined by the Engineer, the allowable deflection shall not exceed that recommended by the pipe manufacturer.

III. CONNECTION TO EXISTING LINES

A. The method of making connections to existing lines shall be approved by the Engineer prior to construction. No existing lines shall be abandoned and no new lines shall be put in operation until the new lines have been tested and accepted by the Engineer.

B. It is the Contractor's sole responsibility to maintain the existing sewer lines in service before the new lines are put in operation.

C. PVC pipe connections into new concrete manholes shall be made using Kor-n-seal boot or approved equal. Connections to existing concrete manholes shall be made by using a PVC manhole adaptor (sand collar).

D. Grouting shall be non-shrink type.

IV. MANHOLES

A. Drop manhole assembly shall be constructed using PVC fitting with gasket-fitted joints. Glue jointing is not acceptable. Drop assembly shall conform to Standard Plan No. S.12. No outside drops are allowed. Dry manholes shall be allowed only when no other feasible alternative exists.

B. Flow line inverts shall be channeled using concrete and shall be finished with smooth flow line and surface finished. When connecting into an existing manhole, the new flow channel shall interface with the existing channel. Channeling shall conform to Standard Plan No. S.13.

C. All joints in the manhole shall be sealed against leaks.

D. The manhole cover shall be adjusted to final grade with approved methods.

E. Ladders and steps shall be secured and grouted in the new manholes before the manhole is put into service.

F. Manholes shall be constructed at all horizontal and vertical bends and at changes in pipe material.

V. TESTING

A. Lamping of lines to check deflection in the pipe will be conducted prior to any pressure tests.

B. Mandreling and/or video taping the sewer main may be required by the Public Works Department.

C. A 15-minute, 4 psi air test with no pressure drop will be required to ensure joint seals.

D. Force laterals require a 15 minute, 25 psi air test with no pressure drop.

VI. LATERALS

A. Joint-Use Laterals

1. Minimum pipe size shall be 6".

2. Maximum of two houses can be served on a single 6" line, unless otherwise approved by the Public Works Department.

3. One cleanout must be installed for every 100' of length and at each elbow greater than 22 1/2 degrees. Place locator tape on cap when outside of paved surface.

4. Any lateral under a structure such as a rockery and with less than 3' of cover below the structure base shall be ductile iron for 5' on each side of the structure.

5. Backflow valve/check valve will be required by the Engineer per Title 15 of the Kirkland Municipal Code.

6. Testing of laterals shall conform to Title 15 of the Kirkland Municipal Code.

B. Single-Family Laterals

1. Minimum pipe size off the main channel to the property/right-of-way line shall be 6".

2. Minimum cover of 6' is required at the property/right-of-way line.

3. One service lateral for each family unit, unless otherwise approved by the Public Works Department.

4. Location of lateral shall be at lowest property corner or as conditions dictate.

5. Any lateral under a structure such as a rockery and with less than 3' of cover below the structure base shall be ductile iron for 5' on each side of the structure.

6. Backflow valve/check valve may be required by the Engineer.

C. Multifamily Laterals

Backflow valve/check valve will be required by the Engineer per Title 15 of the Kirkland Municipal Code.

D. Laterals for commercial and multifamily applications shall be tied into a manhole whenever possible. When this is not feasible, laterals shall be connected to the sewer main by one of the following approved methods:

1. Cut in a wye connection

2. PVC saddle

3. Romac sewer saddle

4. Inserta Tee

5. Thermal Fusion for HDPE Mains.

E. Existing Lateral

1. Existing PVC laterals may be reused. A video inspection must be submitted for review to determine size and condition.

2. All other lateral types must be replaced to meet current specifications.

3. Existing 6" concrete laterals may be slip line. A video inspection must be submitted for review to determine size and condition.

VII. SEWER LIFT STATIONS - PRIVATE

A. General Requirements

1. All pumps within lift stations must be submersible grinder pumps, manufactured by Hydromatic or equal.

2. All equipment and accessories shall be standard manufactured items and those coming in direct contact with sewage shall be specifically manufactured for such use.

3. The pressure piping downstream of the lift station must tie into a 6-inch side sewer which flows by gravity into the sewer main. No direct connections of force laterals and sewer mains will be allowed.

4. Lift station chamber must be either concrete or fiberglass.

5. The lift station must be cycled on/off ten times to ensure all floats and alarms function properly before being signed off by the City. This test must be witnessed by the Public Works Inspector.

B. Single-Family Lift Stations - Specific Requirements

1. Lift station to be a minimum of a simplex system (one pump).

2. There shall be a minimum of three mercury level control floats; one for turning the pump ON, the second for turning the pump OFF, and the third for a high-water alarm.

3. Grinder pump shall be two HP minimum, which is adequate for a single residence with up to 70 feet of head.

4. Audio and visual alarm panel to be located inside the single-family residence.

5. Pre-designed lift station packages are acceptable.

C. Commercial and Multi-Family Lift Stations - Specific Requirements

1. Lift station to be a duplex system (dual pumps) and must be designed by a licensed professional engineer.

2. Audio and visual alarms are required. Alarms are to be located within the building structure near the maintenance office or property manager's office.

3. For multi-family projects, the Public Works Department shall determine if the development is to be served by individual lift stations for each unit/building or if the entire development may be served by one lift station. When the entire development is to be served by one lift station, a three-party maintenance agreement between the City of Kirkland, the development, and a lift station maintenance company shall be recorded with the property.

VIII. CONSTRUCTION

A. Through Sewer Main Line

1. Minimum pipe size shall be 8" (size as required by flow calculations).

2. Maximum distance between manholes shall not exceed 400'.

3. Normal depth of pipe shall be 7' to 12'. All other depths to be approved by the Public Works Department.

B. Dead End Sewer Main Line

Dead end sewer main shall terminate with a manhole unless otherwise approved by the Public Works Department.

C. Required Separation Between Water Lines and Sanitary Sewers (Reference Standard Detail No. S.02).

1. *Horizontal Separation (Parallel)* - A minimum horizontal separation of ten (10) feet between gravity sanitary sewers and any potable water lines shall be maintained, whenever possible. The distance shall be measured from edge to edge.

2. *Unusual Conditions (Parallel)* - When local conditions prevent a horizontal separation as described above, a gravity sewer line may be laid closer than ten (10) feet to a water line provided:

a) It is laid in a separate trench; or it is laid in the same trench with the water line that is located at one side on a bench of undisturbed earth; and

b) In either case, the elevation of the crown of the gravity sewer must be at least 18 inches below the invert of the water line. When this vertical separation cannot be obtained, the gravity sewer shall be constructed of materials and joints that are

equivalent to water main standards of construction and shall be pressure tested to assure water tightness prior to backfilling.

3. *Vertical Separation (Perpendicular)* - Sewer lines crossing water lines shall be laid below the water lines to provide a separation of at least 18 inches between the invert of the water line and the crown of the sewer line, whenever possible.

4. *Unusual Conditions (Perpendicular)* - When local conditions prevent a vertical separation as described above, the following construction shall be used:

   a) Gravity sewers passing over or under water lines shall be:

      i. Constructed of material described in Standard Detail No. S.02. The one segment of the maximum standard length of pipe (but no less than 18 feet long) shall be used with the pipes centered to maximize joint separation; or

      ii. Constructed of standard gravity sewer material encased in concrete or in a 1/4" thick continuous steel casing with all voids pressure-grouted with sand-cement grout.

      iii. The length of the sewer pipe, in both i. and ii. above, shall be centered at the point of crossing so that the joints will be equidistant and as far as possible from the water line. The sewer pipe shall be the longest standard length available from the manufacturer.

   b) Water lines passing under gravity sewers, in addition, shall be protected by providing:

      i. A vertical separation of at least 18 inches between the invert of the sewer and the crown of the water line;

      ii. Adequate structural support for the sewers to prevent excessive deflection of joints and settling on and breaking of the water lines; and

      iii. The length of the sewer pipe shall be centered at the point of crossing so that the joints will be equidistant and as far as possible from the water line. The sewer pipe shall be the longest standard length available from the manufacturer.

   c) Pressure sewers shall only be constructed under water lines with ductile iron pipe or standard sewer pipe in a steel casing for a distance of at least ten (10) feet on each side of the crossing.

D. Trench and Bedding Detail

1. Trench section shall conform to Standard Plan No. S.01.

2. The trench width to 6" above the top of pipe shall not be greater than 1 1/2 times the outside diameter of pipe plus 18", except that the trench width shall be such as to provide adequate space for workmen to place and joint the pipe properly and safely. Trench walls shall be kept vertical, except the walls of the trenches above an elevation 6" above the top of pipe may be sloped back to prevent the banks from sloughing into the ditch.

3. When soft or unstable material is encountered at the subgrade which, in the opinion of the City Engineer, will not uniformly support the pipe, such material shall be excavated to an additional depth as required by the City Engineer and backfilled with foundation rock material placed in 12" lifts and compacted to 95 percent of the maximum dry density to the pipe foundation grade.

   Where unusually bad foundation conditions are encountered at the bottom of the trench, the City Engineer may order special foundation material to be placed.

4. Wherever necessary to prevent caving, excavations in sand, gravel, sandy soil, or other unstable material shall be adequately sheeted and braced. Where sheeting and bracing are used, the trench width may be increased accordingly. Trench sheeting shall remain in place until the pipe has been laid, tested for defects, and repaired if necessary, and the earth around it compacted to a depth of 2' over the top of the pipe.

5. Excavation for manholes and other appurtenances shall be sufficient to leave 12" minimum and 24" maximum clearance on all sides.

6. Joints shall not be left uncovered except in the immediate area of pipe laying. Under no circumstances shall water be permitted to rise in the trench until after the pipe has been placed, tested, and backfilled.

7. Regardless of the method of densification used, materials shall be brought up at substantially the same rate on both sides of the pipe, and care shall be taken so that the pipe is not floated or displaced. Fill material shall not be dropped directly on the pipe.

8. Pipe zone material shall consist of excavated or imported material free from roots or other organic material, mud, muck, and frozen material.

9. Pipe zone material shall be densified by compaction using mechanical tamping to a density of 95 percent of maximum dry soil density using a modified proctor. Equipment with suitably-shaped tamping feet shall be used to compact the material and ensure that the specified soil density is obtained beneath the haunches of the pipe. At the time of placement, the materials shall have the optimum moisture content required for compaction and the moisture content shall be uniform throughout each layer. Materials shall be placed in layers not more than 6" thick after each compaction.

10. Trench backfill above the pipe zone to the surface of the finish grade or native ground shall be placed so that the resulting density will be 95 percent of maximum dry soil density, modified proctor, within travelled ways and 85 percent of maximum dry soil density for areas outside travelled ways. Backfill material shall be placed in continuous horizontal layers not exceeding 12" in thickness. This will be strictly adhered to for all pipes placed in the right-of-way.

11. Native backfill shall be mounded to a height of 4" over the top of the trench for ordinary backfill outside travelled ways.

12. Material for backfilling around manholes and other appurtenances shall be gravel barrow. Materials shall be deposited in a manner to ensure that the manhole or other appurtenance is not disturbed from the proper alignment, and backfill shall be compacted to the ground surface.

13. All interior bracing placed inside the pipe by the manufacturer shall be removed only after the backfill is complete.

CITY OF KIRKLAND

123 FIFTH AVENUE • KIRKLAND, WASHINGTON 98033-6189 • (425) 587-3800

DEPARTMENT OF PUBLIC WORKS
PRE-APPROVED PLANS POLICY

Policy S-1: REQUIREMENTS FOR CONSTRUCTION NEAR LAKEFRONT SEWER LINE

A public sewer main that is accessed by means of a public sewer easement traverses certain lakefront properties within the City of Kirkland. Since this line crosses private property, and needs to be maintained by the City, the following requirements must be met for new construction in these areas.

1. There must be no encroachment into the easement at the ground surface by a structure.

2. Under certain circumstances, a cantilevered building design may be allowed into the easement. Up to 4 feet may be allowed for the 2nd and 3rd floors of a structure, providing 10 feet of vertical clearance is maintained between the finished grade and the underside of the cantilevered portion of the building.

3. Re-routing of the sewer main will be considered on a case by case basis, at the discretion of the Public Works Department; minimum pipe slopes must be maintained.

4. The City may request addition easement width if the current easement is determined to be inadequate, or does not meet the requirements of Easement Width Requirements, Policy G-1.

5. Building or wall footings that abut the easement may be required to extend to a depth equal to, or greater than, the depth of the sewer main.

6. At the discretion of the City, shoring/piling construction may be necessary to protect the sewer main during construction of the residential foundation.

7. The owner must sign a Hold-Harmless Agreement when installing landscaping plants or appurtenances within the easement.

CITY OF KIRKLAND

123 FIFTH AVENUE • KIRKLAND, WASHINGTON 98033-6189 • (425) 587-3800

DEPARTMENT OF PUBLIC WORKS
PRE-APPROVED PLANS POLICY

Policy S-2: CLOSED CIRCUIT CAMERA REQUIREMENTS FOR SEWER MAINS

All newly installed sewer main lines meeting any of the following conditions will need to inspected with a closed circuit camera.

1. Any sanitary main section that is installed at less than 1%.

2. Any sewer main that is in excess of 200' from manhole to manhole.

3. Any sewer main terminated with a temporary clean-out.

4. Any sewer main line section that has more than (2) laterals coming into it (manhole to manhole).

5. Any sewer main that the City Inspector determines needs to be inspected due to ground conditions, poor installation techniques or suspicion of problems.

Any sewer main which is inspected with closed circuit camera at the completion of a project shall be re-inspected with a closed circuit camera at the end of the two-year maintenance period.

All main lines must be flushed clean and all the water must be exhausted by gravity (not by mechanical means) before sending the closed circuit camera through the main. This will give water a chance to settle in any potential low spots.

LAST REVISED:01/15/14

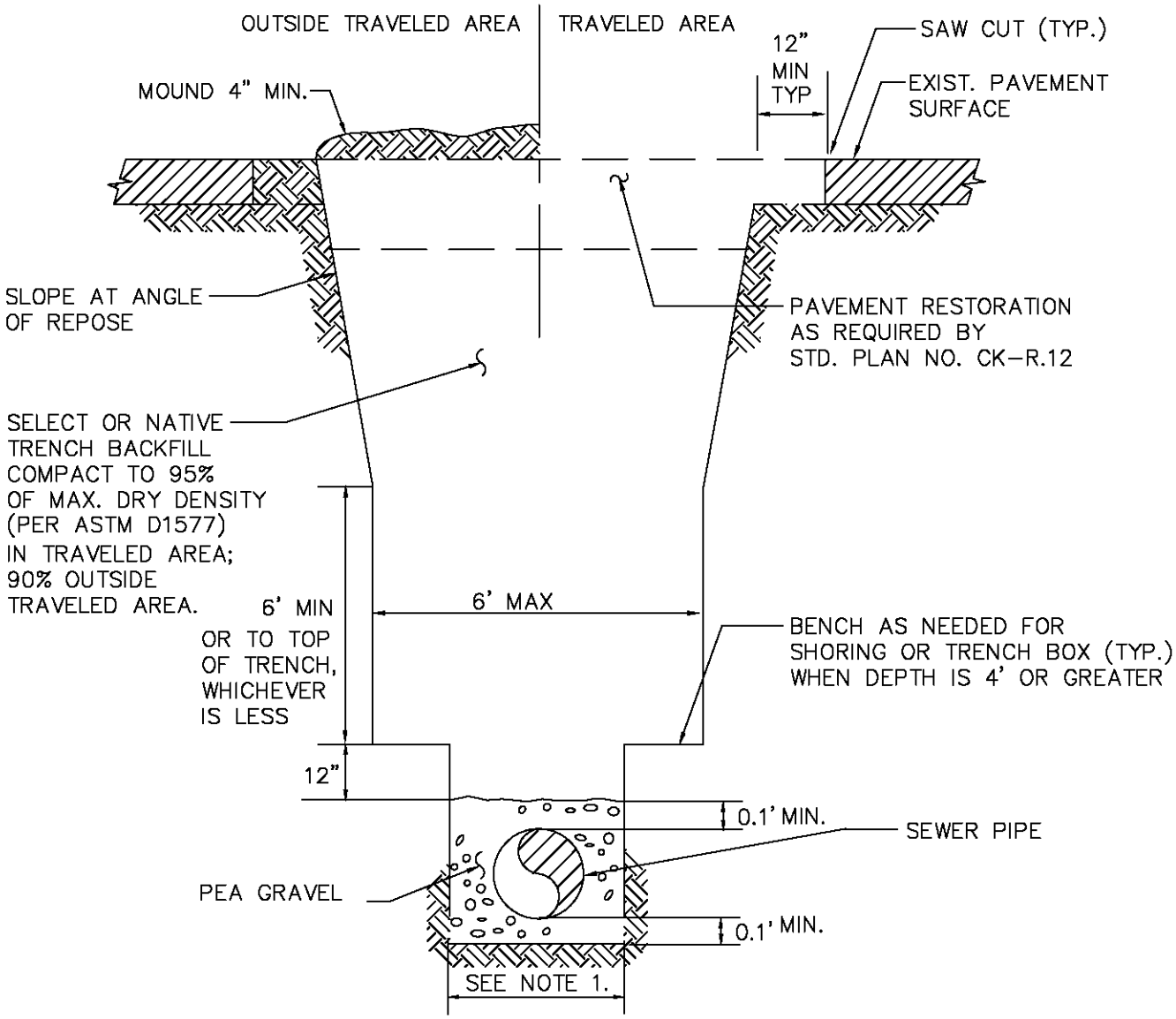

NOTES

1. TRENCH BACKFILL BELOW TOP 4 FEET MAY BE NATIVE MATERIALS OR AS REQUIRED BY THE SPECIFICATIONS, OR AS DIRECTED BY THE PUBLIC WORKS INSPECTOR.

2. MAXIMUM WIDTH OF TRENCH AT TOP OF PIPE
   * 30 INCHES FOR PIPE UP TO AND INCLUDING 12" NOMINAL DIAMETER.
   * O.D. PLUS 16 INCHES FOR PIPE LARGER THAN 12" NOMINAL DIAMETER.

3. IN PAVED AREAS USE CRUSHED ROCK BACKFILL
   * FULL DEPTH OF TRENCH WHERE SEWER MAIN CROSSES PERPENDICULAR TO THE TRAVELED LANE OR DRIVEWAY.
   * TOP FOUR FEET WHERE SEWER MAIN RUNS PARALLEL TO THE TRAVELED LANE, UNLESS EXISTING MATERIAL IS DETERMINED BY THE ENGINEER TO BE SUITABLE FOR BACKFILL.

4. THE STREET SHALL BE OVERLAID WHEN THE ASPHALT ROADWAY IS LESS THAN 5YRS OLD FOR UTILITY CROSSINGS, THE STREET SHALL BE OVERLAID AT LEAST 15 FEET ON EACH SIDE OF THE TRENCH. SEE OVERLAY POLICY R-7.

CITY OF KIRKLAND	
PLAN NO. CK-S.01	
CITY OF KIRKLAND WASHINGTON	SANITARY SEWER TRENCH DETAIL

LAST REVISED: 11/30/00

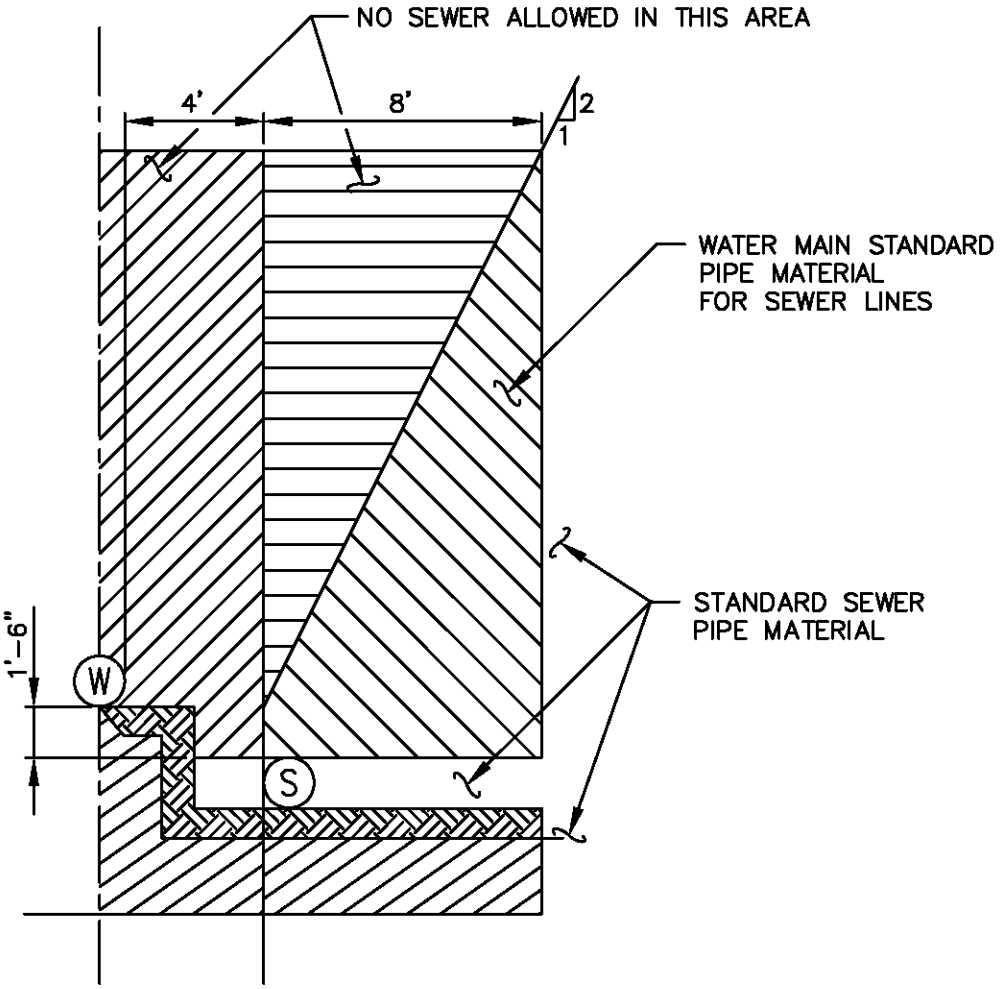

PARALLEL CONSTRUCTION

TABLE 1

WATER MAIN STANDARD PIPE MATERIAL

AWWA STANDARD			
TYPE OF PIPE	PIPE	JOINT	FITTINGS
DUCTILE IRON	C 1.52	C 111	C 110
CONCRETE CYLINDER	C 303		

NOTE:

1. TO BE USED WHEN 10' MINIMUM SEPARATION CANNOT BE OBTAINED.

CITY OF KIRKLAND

PLAN NO. CK-S.02

CITY OF KIRKLAND WASHINGTON

WATER AND SEWER SPACING AND CLEARANCE

LAST REVISED:2/3/05

PIPE BEDDING CLASSES

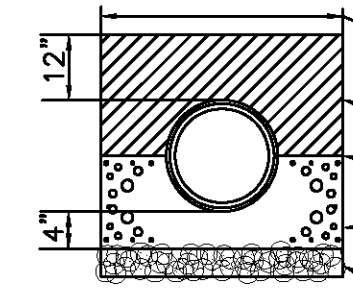

RIGID PIPE BEDDING

- 30" MAXIMUM FOR PIPE UP TO AND INCLUDING 12" FOR PIPE LARGER THAN 12", O.D. OF PIPE PLUS 16".
- BACKFILL SHALL BE COMPACTED TO 95% DENSITY
- SPRING LINE
- COMPACTED BEDDING GRAVEL PER WSDOT/APWA SECTION 9-03 STANDARD SPECIFICATIONS, OR CONCRETE IF SPECIFIED.
- FOUNDATION GRAVEL, IF REQUIRED (SEE NOTE 2.)

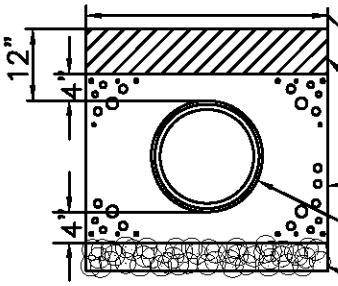

PVC PIPE BEDDING

- SEE ABOVE FOR TRENCH WIDTH
- BACKFILL SHALL BE COMPACTED TO 95% DENSITY
- COMPACTED BEDDING GRAVEL PER WSDOT/APWA SECTION 9-03 STANDARD SPECIFICATIONS, OR CONCRETE IF SPECIFIED.
- PVC PIPE
- FOUNDATION GRAVEL, IF REQUIRED (SEE NOTE 2.)

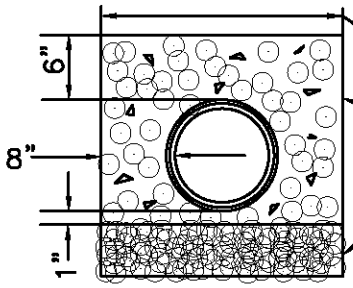

CONCRETE ENCASEMENT

- SEE ABOVE FOR TRENCH WIDTH
- CONCRETE, 2000 PSI (SEE NOTE 3.)
- FOUNDATION GRAVEL, IF REQUIRED (SEE NOTE 2.)

NOTES:

1. COMPACTED CRUSHED SURFACING TOP COURSE PER WSDOT/APWA SECTION 9-03.9(3) STANDARD SPECIFICATIONS CAN ALSO BE USED AS BEDDING GRAVEL.
2. EXCAVATE UNSTABLE MATERIAL DOWN TO FIRM SOIL AND REPLACE WITH FOUNDATION GRAVEL PER SECTION 9-03.9(1) OF THE STANDARD SPECIFICATIONS
3. THE CONTRACTOR SHALL BE RESPONSIBLE FOR ANCHORING PIPE TO PREVENT FLOTATION DURING CONCRETE PLACEMENT.

CITY OF KIRKLAND	
PLAN NO. CK-S.03	
CITY OF KIRKLAND WASHINGTON	PIPE BEDDING

LAST REVISED: 11/30/99

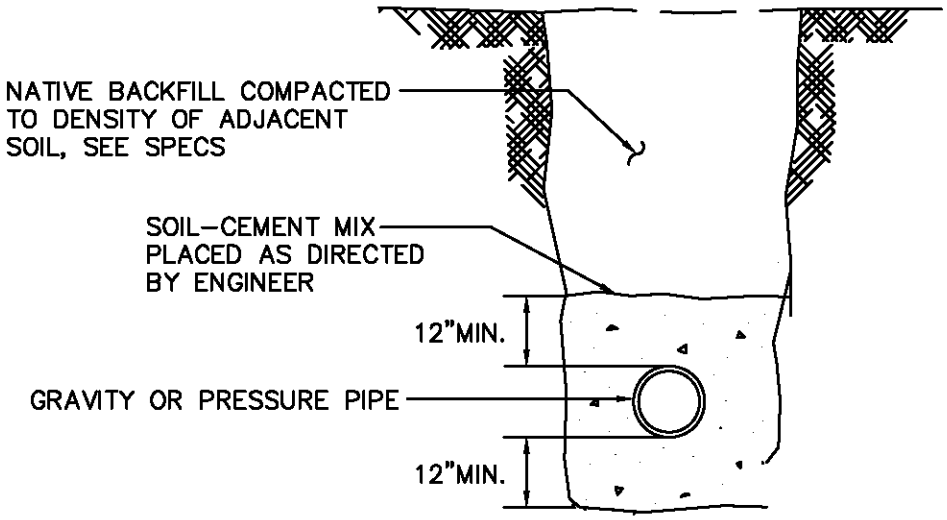

SECTION A–A

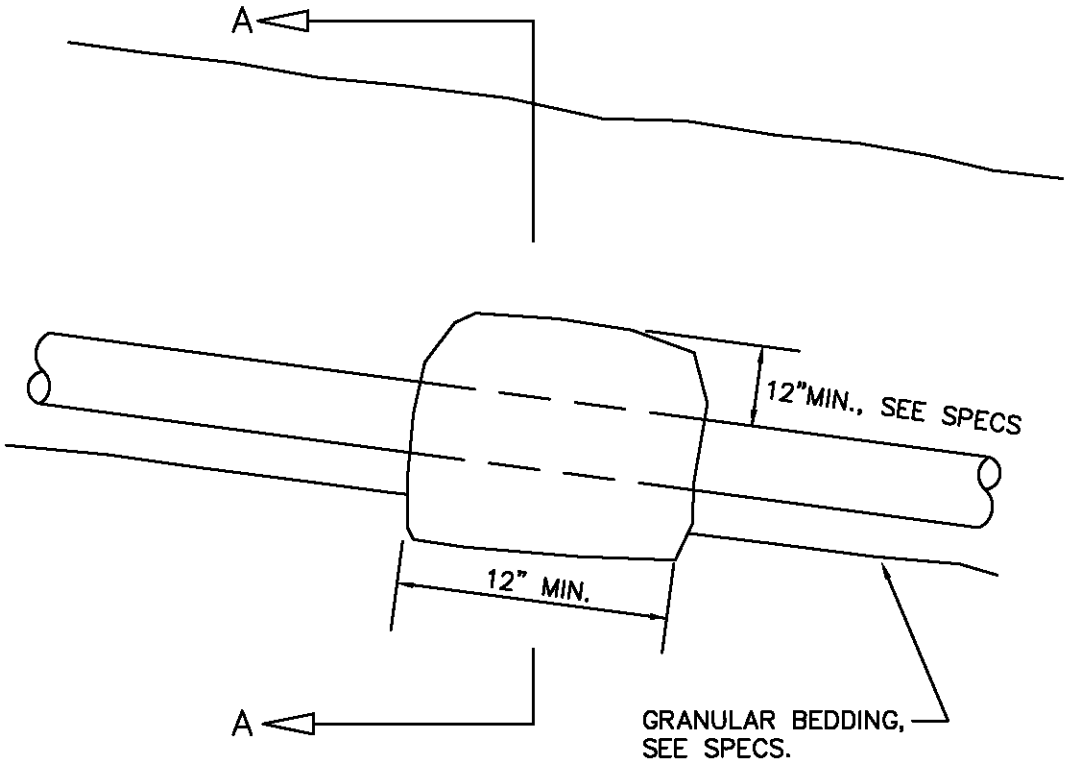

NOTE:

1. SOIL CEMENT BLOCKS PLACED OVER AND AROUND PIPE. TAMPED INTO PLACE BEFORE PLACING BACKFILL. USE 10% CEMENT WITH 90% NATIVE SOIL AND WATER TO SUIT TO FORM A DRY MIX THAT WILL HOLD ITS SHAPE WHEN MOLDED INTO A BALL. SOIL CEMENT BLOCKS REQUIRED ON SLOPES 20% OR GREATER.

CITY OF KIRKLAND	
PLAN NO. CK–S.04	
CITY OF KIRKLAND WASHINGTON	SOIL/CEMENT PIPE ANCHOR

LAST REVISED: 11/30/99

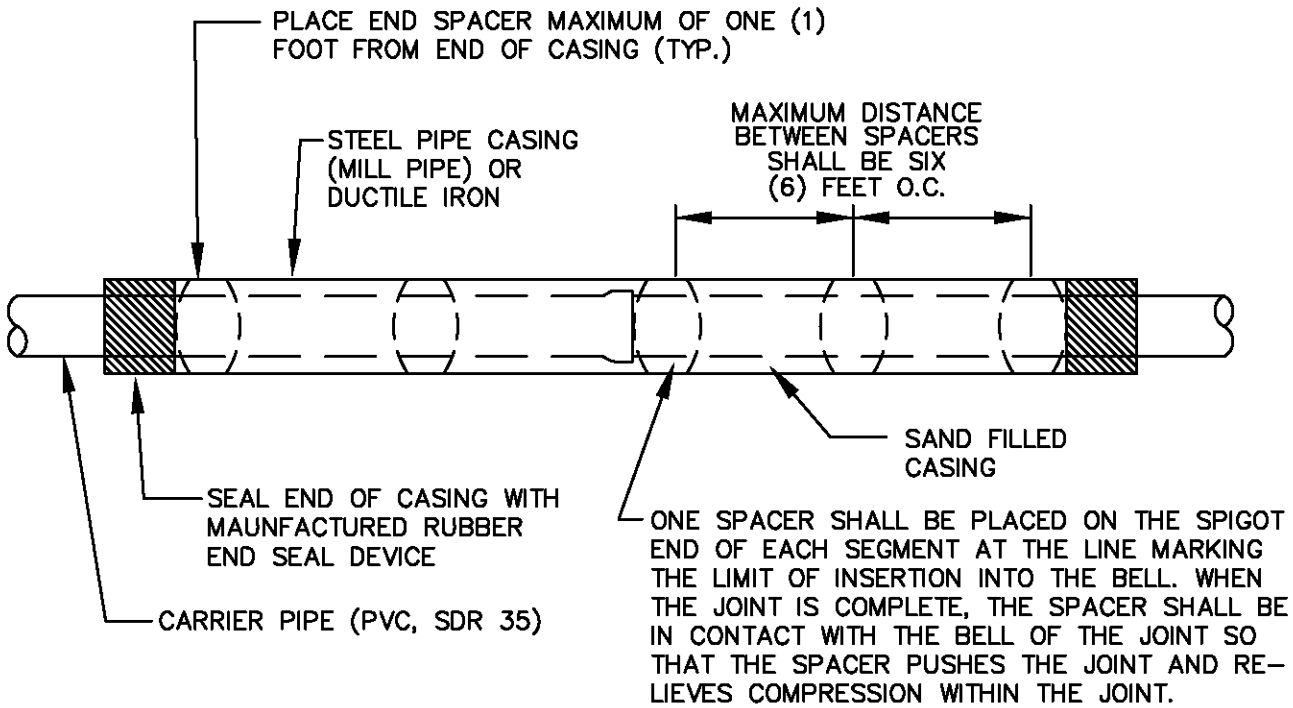

CASING SPACERS (SEE APPROVED MATERIALS LIST)

CARRIER PIPE DIAMETER	8"	10"	12"
CASING DIAMETER	14"	16"	20"
STEEL CASING THICKNESS	0.25"	0.25"	0.25"
SPACER BAND WIDTH	12"	12"	12"

ANTICORROSIVE COATING THICKNESS:
CASING – 8 MILLS DFT

NOTES:

1. CASING SPACERS SHALL BE "CENTER POSITIONING" TYPE.
2. MINIMUM RUNNER WIDTH SHALL BE 2 INCHES.
3. RUNNER HEIGHT SHALL BE SIZED TO PROVIDE:
   A. MINIMUM 0.75" BETWEEN CARRIER PIPE BELL AND CASING PIPE WALL AT ALL TIMES.
   B. MINIMUM 1" CLEARANCE BETWEEN RUNNERS AND TOP OF CASING WALL TO PREVENT JAMMING DURING INSTALLATION.
4. STEEL CASING DIAMETERS ARE "OUTSIDE DIAMETER" FOR 16" AND LARGER.

CITY OF KIRKLAND

PLAN NO. CK–S.05

CITY OF KIRKLAND WASHINGTON

CASING INSTALLATION

LAST REVISED: 11/30/99

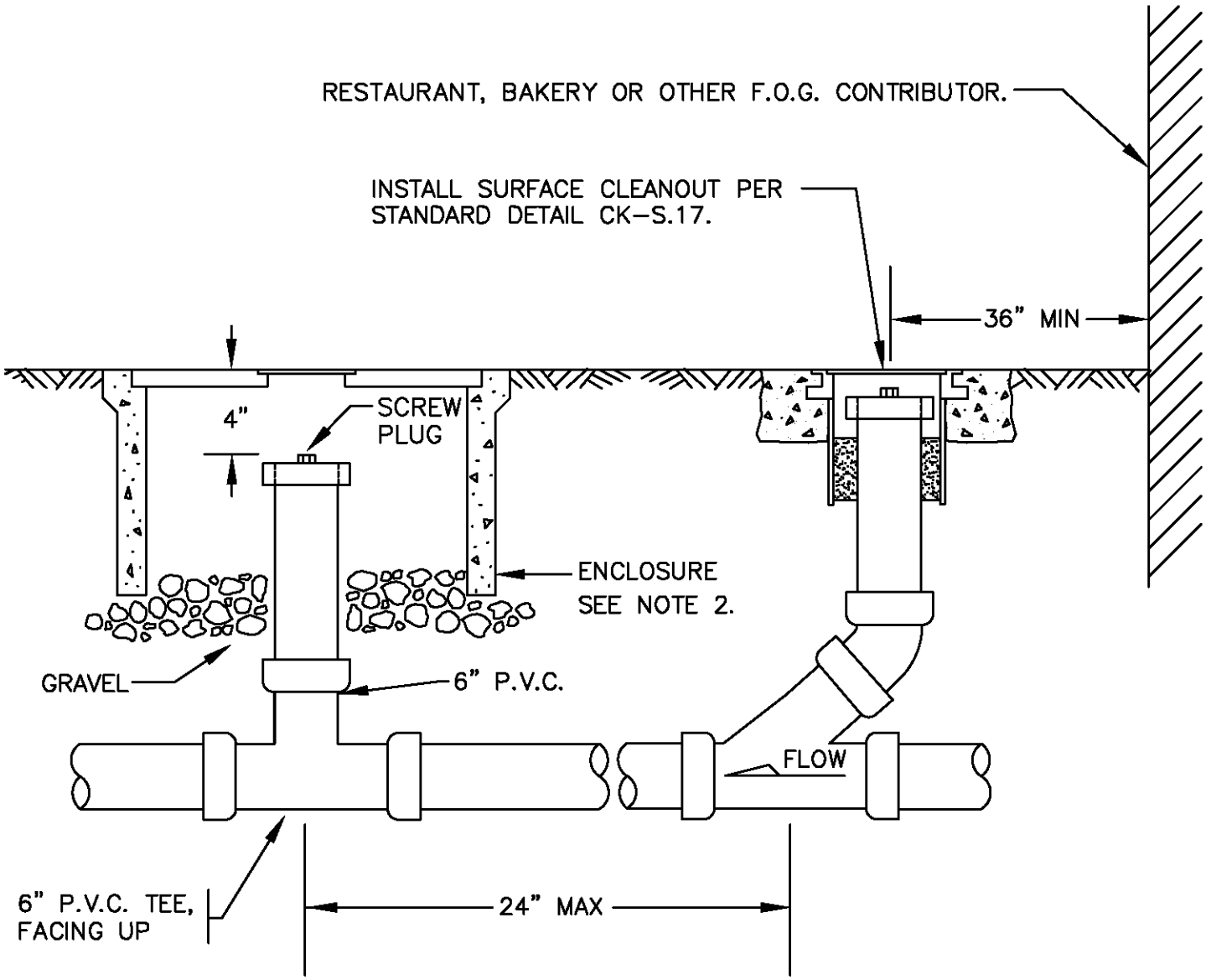

NOTES:

1. INSTALL SAMPLING TEE ON EXISTING OR NEW SIDE SEWER.
2. CONCRETE METER BOX, FOGTITE OR EQUAL.
   FOGTITE 1-D IN NONTRAVELED AREAS.
   FOGTITE B-10T IN SIDEWALK.
   FOGTITE J-20S IN AREAS WITH VEHICULAR TRAFFIC (DIAMOND PLATE FRAME).

CITY OF KIRKLAND	
PLAN NO. CK-S.06	
CITY OF KIRKLAND WASHINGTON	SAMPLING TEE

LAST REVISED: 11/30/99

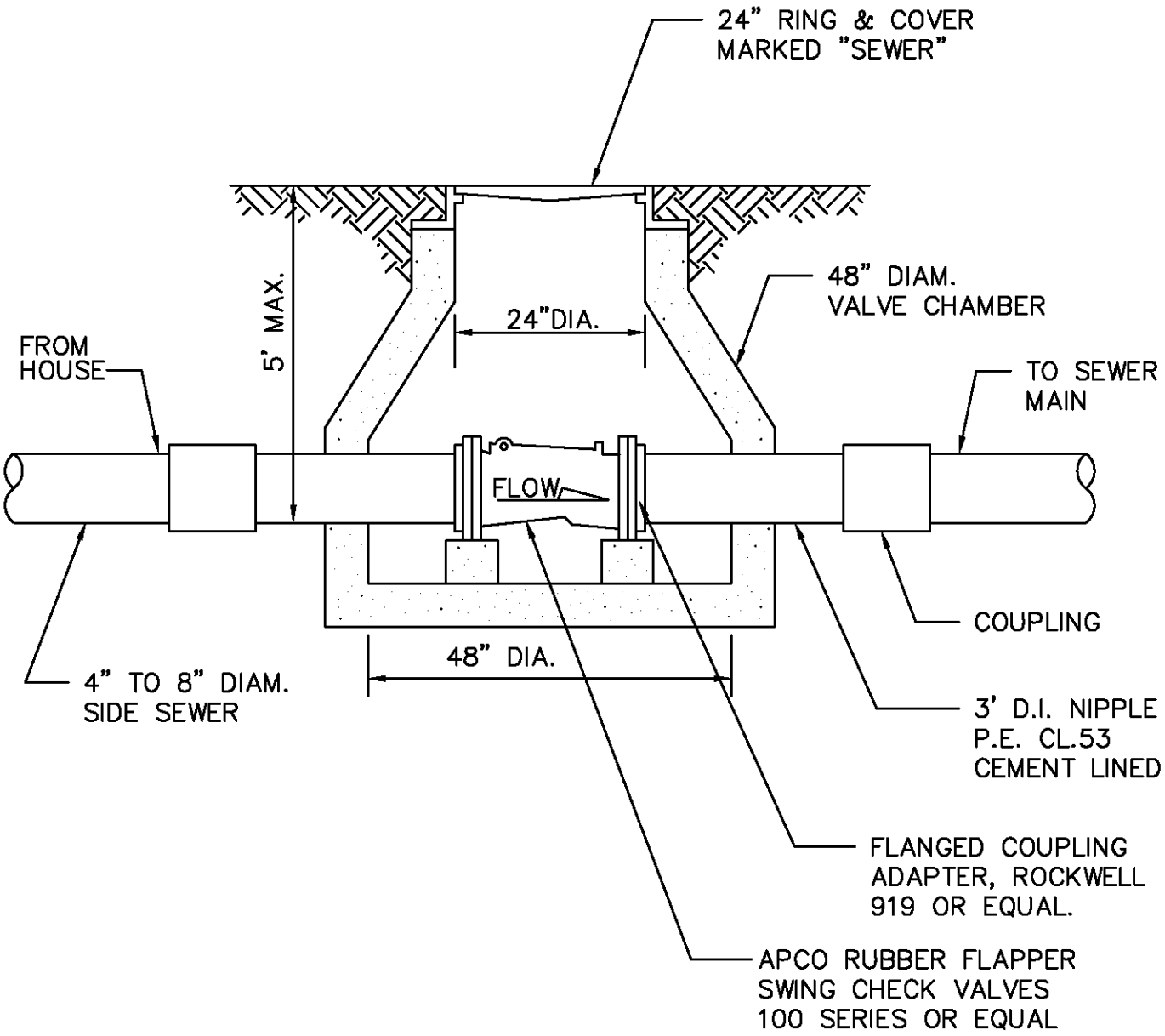

CITY OF KIRKLAND	
PLAN NO. CK– S.07	
CITY OF KIRKLAND WASHINGTON	CHECK VALVE ASSEMBLY FOR JOINT USE SIDE SEWER (4" TO 8" DIAMETER)

LAST REVISED: 11/30/99

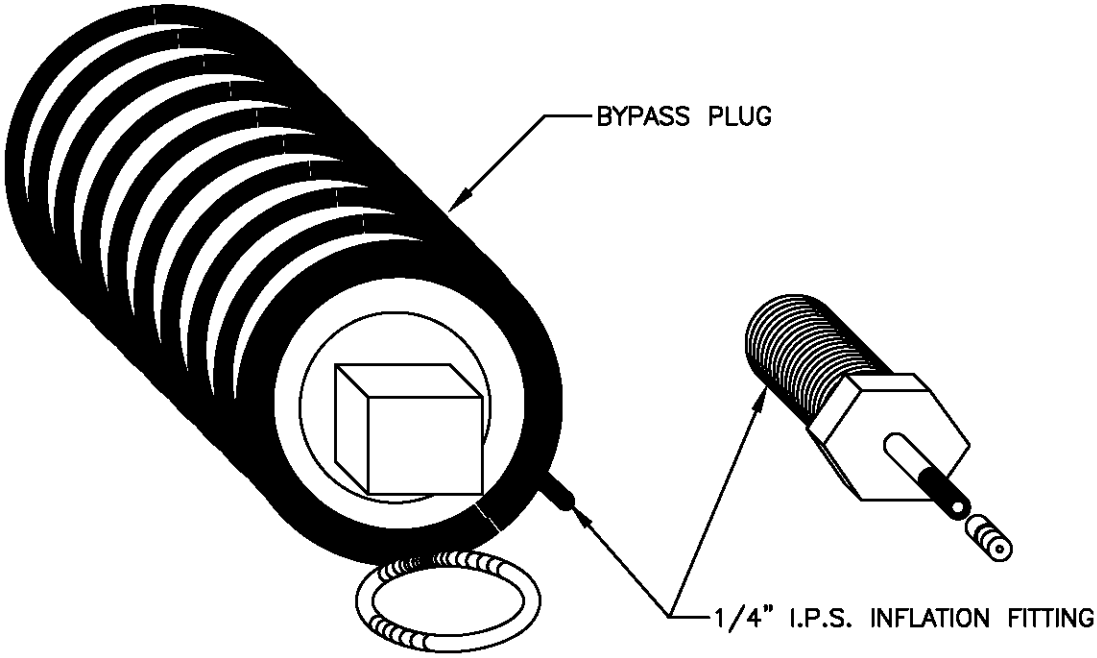

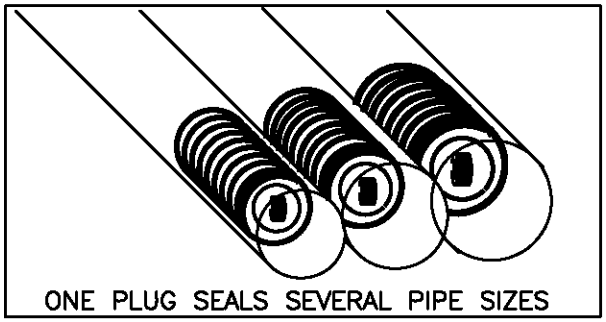

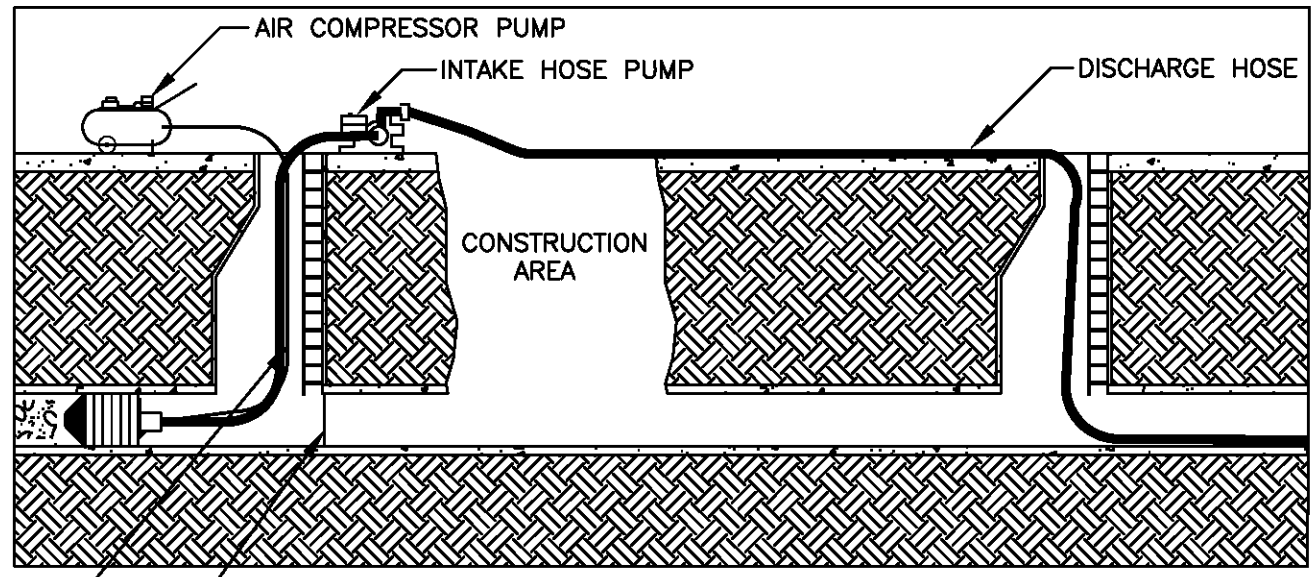

CITY OF KIRKLAND

PLAN NO. CK-S.08

CITY OF KIRKLAND WASHINGTON

SEWER MAIN BYPASS PLUG

LAST REVISED:01/24/2013

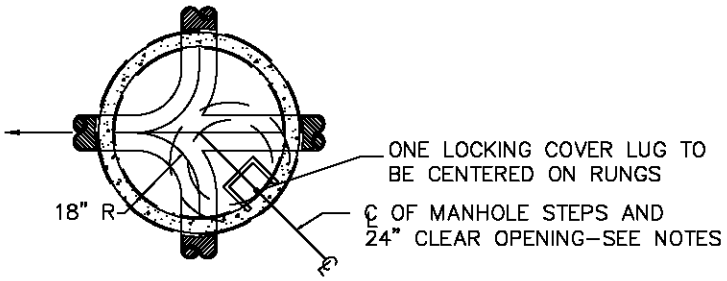

PLAN VIEW

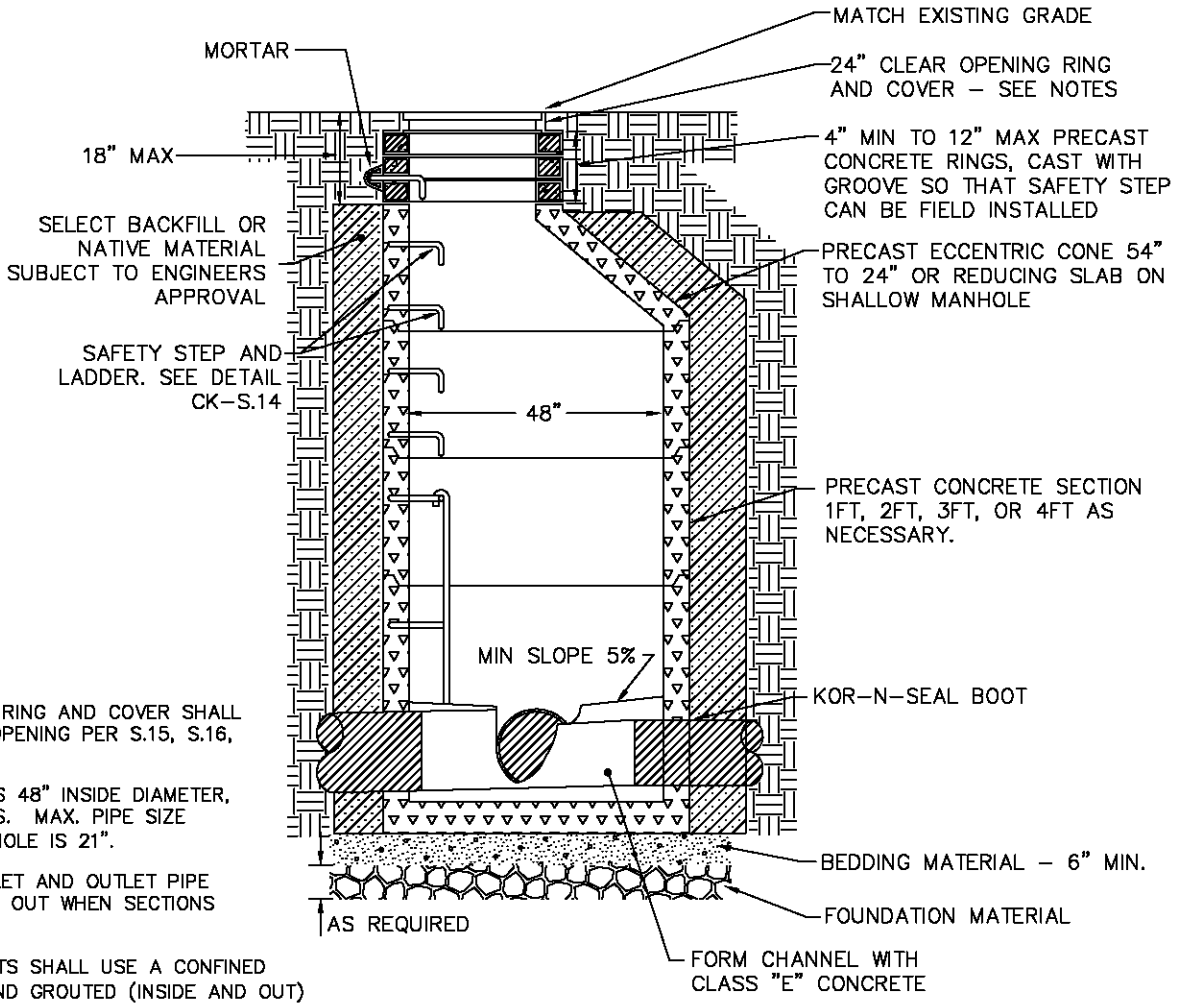

NOTES:

1. LOCKING MANHOLE RING AND COVER SHALL HAVE 24" CLEAR OPENING PER S.15, S.16, S.16A.
2. MANHOLE SHOWN IS 48" INSIDE DIAMETER, 5" WALL THICKNESS. MAX. PIPE SIZE FOR THE 48" MANHOLE IS 21".
3. ALL HOLES FOR INLET AND OUTLET PIPE SHALL BE BLOCKED OUT WHEN SECTIONS ARE CAST.
4. ALL MANHOLE JOINTS SHALL USE A CONFINED RUBBER GASKET AND GROUTED (INSIDE AND OUT) TO MEET ASTM C–443 SPECIFICATIONS.
5. ALL PIPE THROUGH MANHOLE WALL SHALL HAVE A "KOR–N–SEAL" BOOT OR EQUAL.
6. MANHOLE STEPS SHALL BE 1/2" DIA. DEFORMED REINFORCING BARS
7. BEDDING AND FOUNDATION MATERIAL REQUIRED AS SHOWN ON DETAL AND AS NOTED IN THE SPECIFICATIONS. NATIVE MATERIAL MAY BE USED IF APPROVED BY ENGINEER.
8. LOCATION OF MANHOLE STEPS SHALL NOT BE OVER FLOW LINES AND SHALL BE APPROVED BY THE ENGINEER
9. 54" MANHOLE 27" MAX. PIPE
   72" MANHOLE 36" MAX. PIPE
   96" MANHOLE 48" MAX. PIPE

CITY OF KIRKLAND	
PLAN NO. CK–S.09	
CITY OF KIRKLAND WASHINGTON	STANDARD 48" SANITARY SEWER MANHOLE

LAST REVISED: 11/30/99

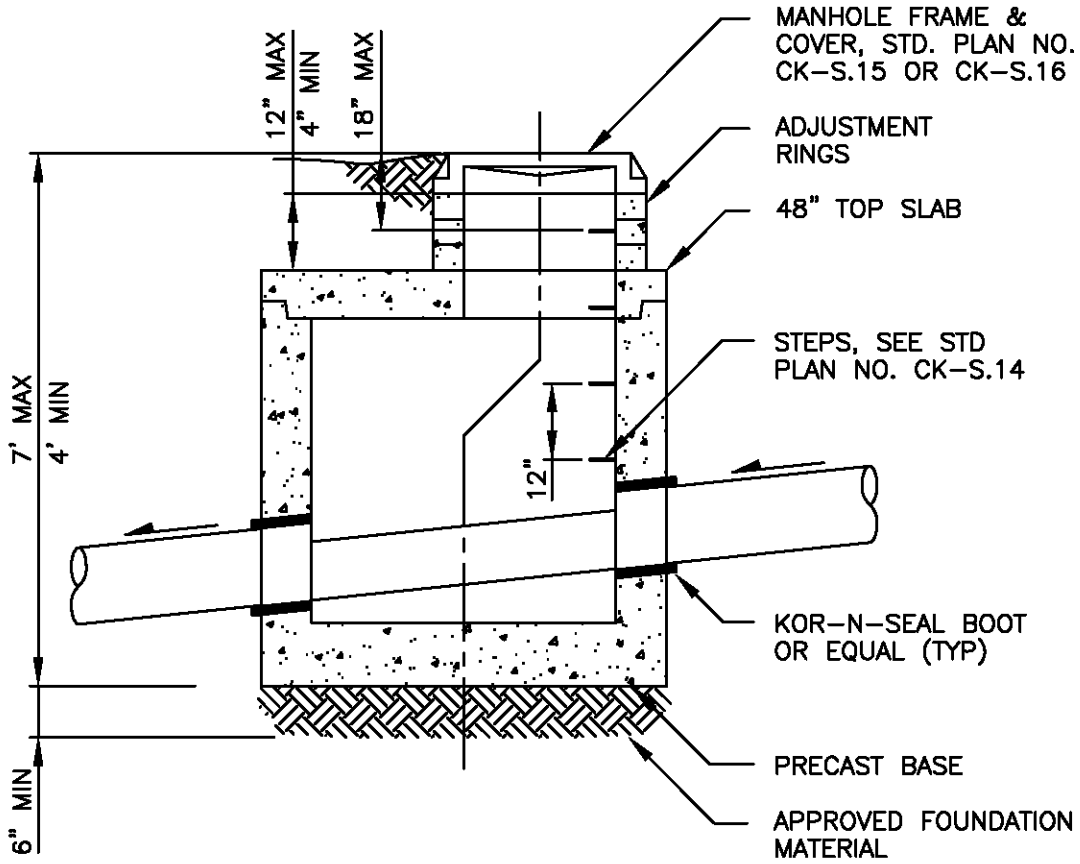

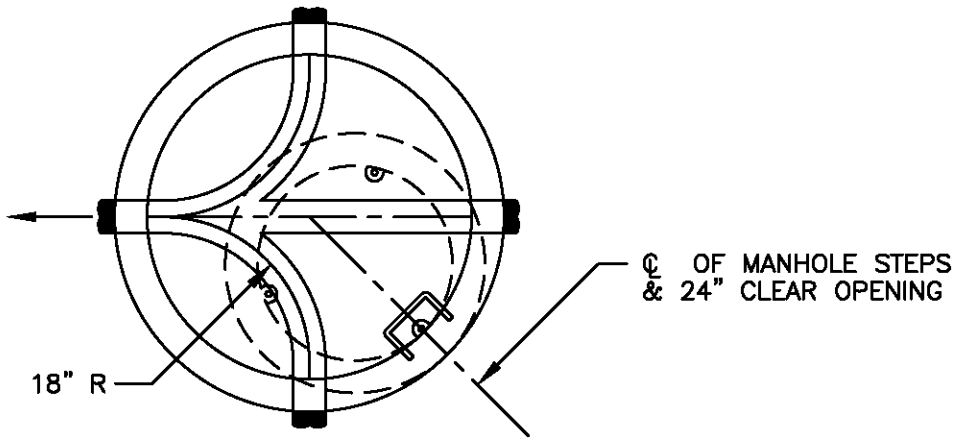

PLAN

CITY OF KIRKLAND	
PLAN NO. CK-S.10	
CITY OF KIRKLAND WASHINGTON	SHALLOW MANHOLE ASSEMBLY

LAST REVISED: 11/30/99

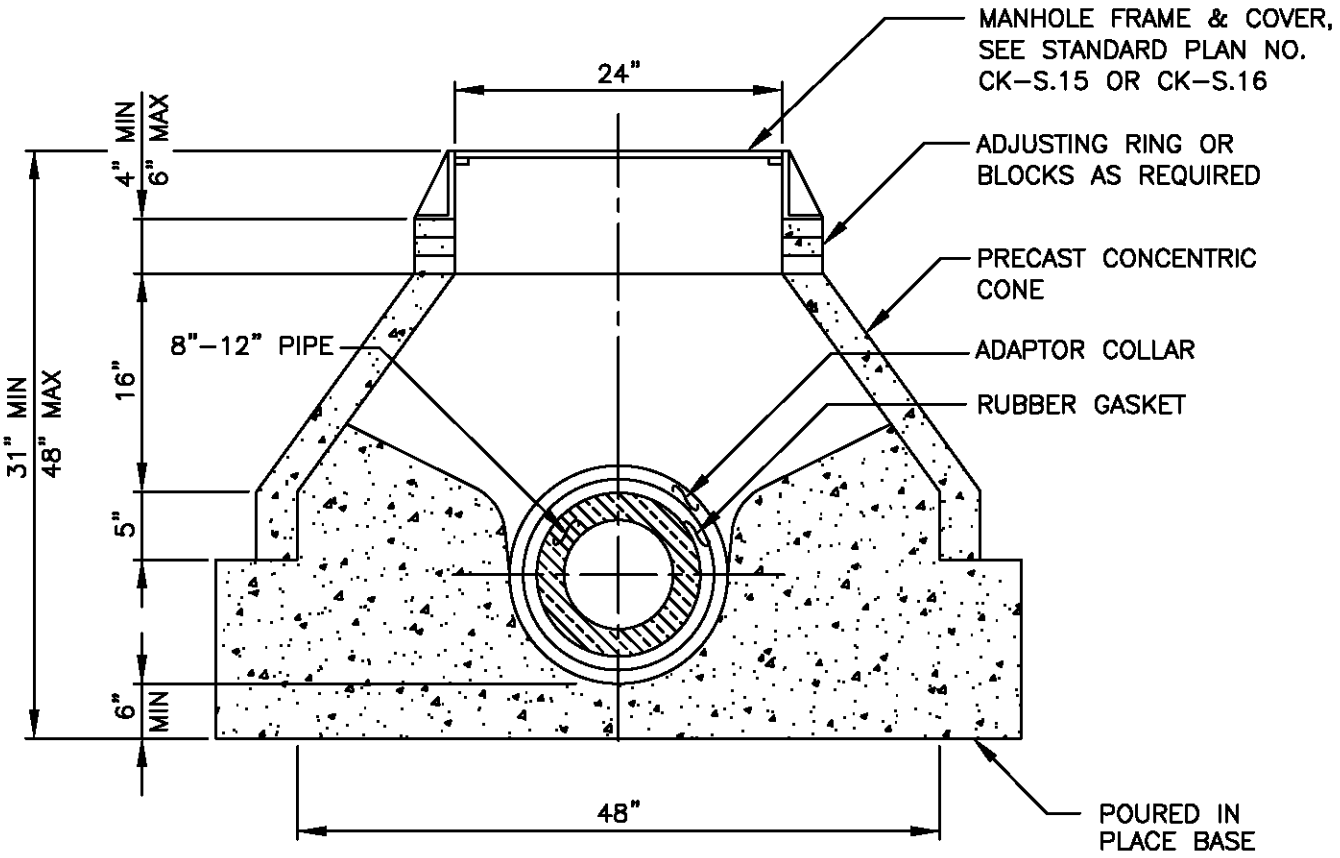

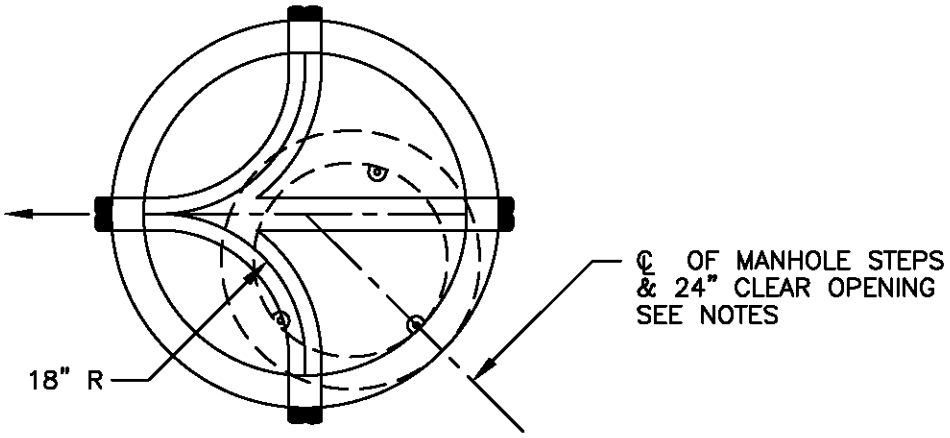

PLAN

CITY OF KIRKLAND	
PLAN NO. CK-S.11	
CITY OF KIRKLAND WASHINGTON	EXTRA SHALLOW MANHOLE ASSEMBLY

LAST REVISED: 1/15/15

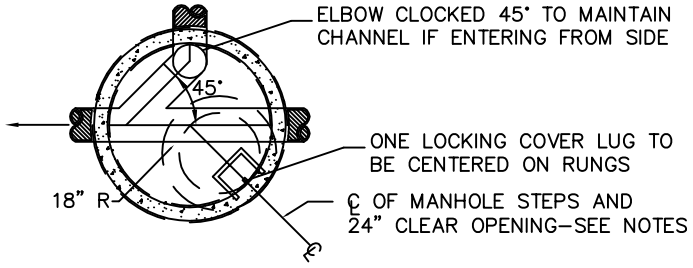

PLAN VIEW

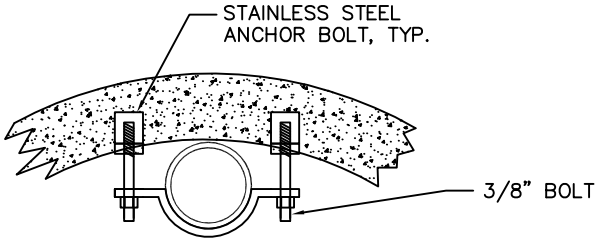

STAINLESS STEEL PIPE STRAPPING
PLAN VIEW

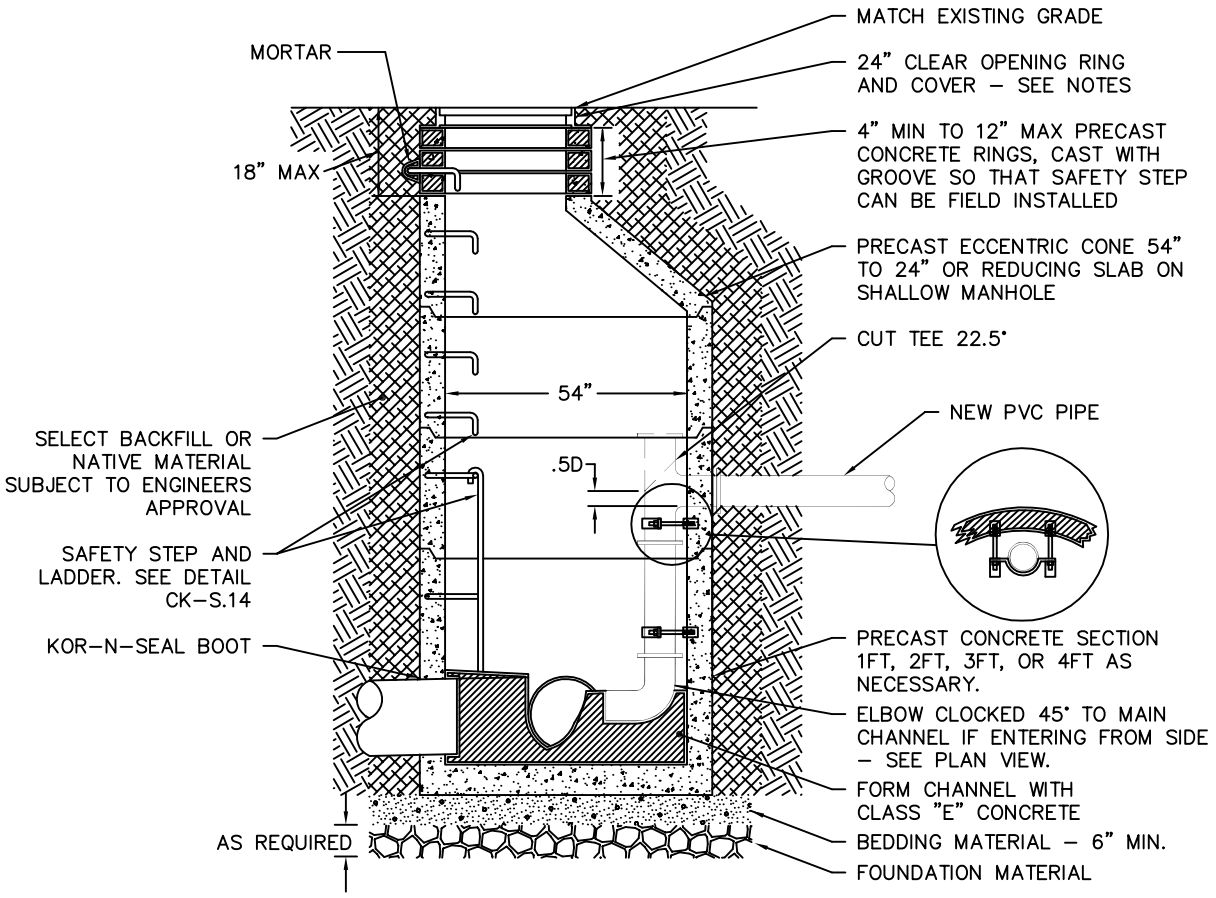

NOTES:

1. USE ONLY WHEN APPROVED BY PUBLIC WORKS.
2. NO EXTERNAL DROPS ALLOWED.

CITY OF KIRKLAND	
PLAN NO. CK–S.12	
CITY OF KIRKLAND WASHINGTON	SANITARY SEWER INTERNAL DROP CONNECTON

LAST REVISED: 11/30/99

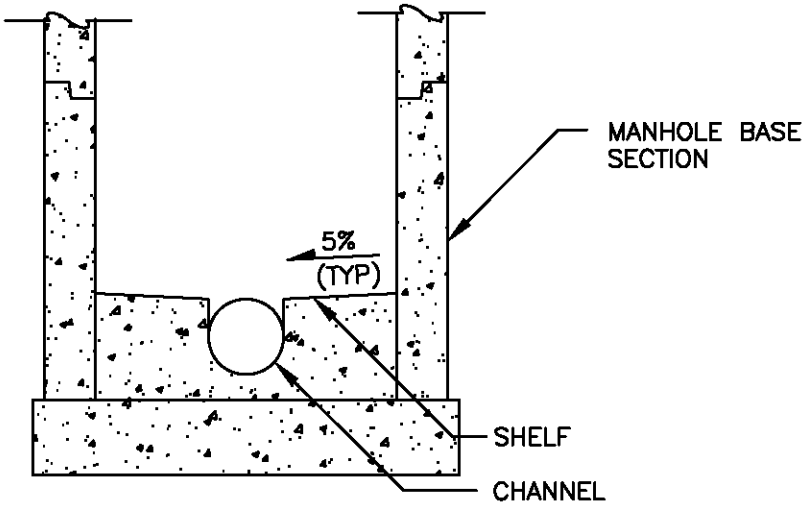

CROSS SECTION

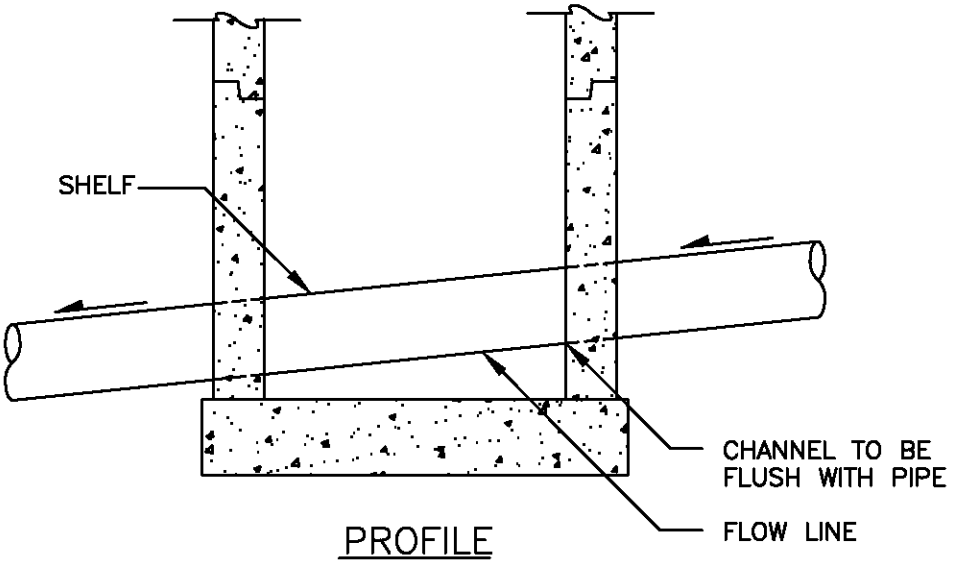

PROFILE

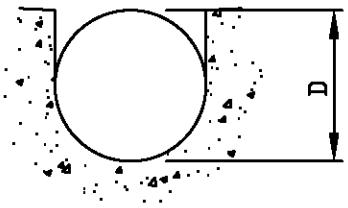

CHANNEL SECTION

NOTES

1. DEPTH OF CHANNEL MUST BE SAME AS PIPE DIAMETER.
2. MINIMUM 0.1' DROP ACROSS CHANNEL; MAXIMUM 1.0' DROP ACROSS CHANNEL.

CITY OF KIRKLAND	
PLAN NO. CK-S.13	
CITY OF KIRKLAND WASHINGTON	SEWER MANHOLE MAIN CHANNEL AND SHELF

LAST REVISED:01/24/2013

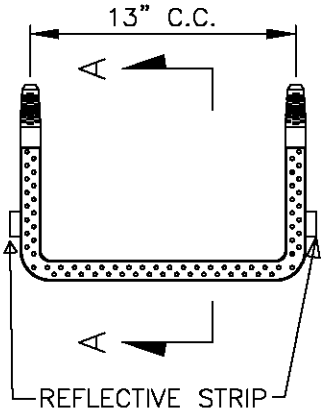

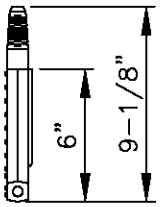

SECTION A-A

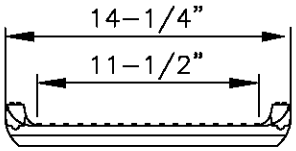

P-14938
POLYPROPYLENE STEP

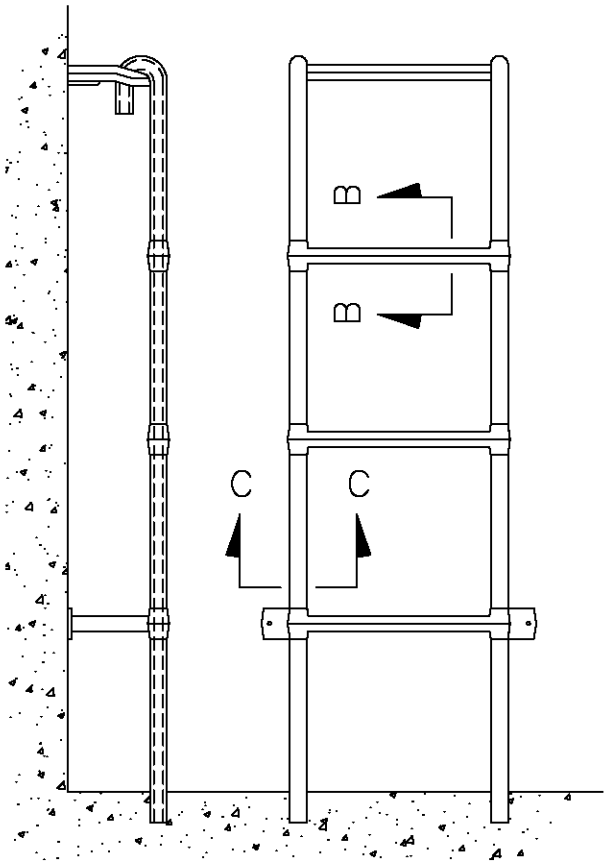

SPECIFICATIONS

1. ALL STEPS SHALL MEET THE REQUIREMENTS OF ASTM C-478, AASHTO M-199, WISHA AND ALL ASHA SPECIFICATION.
2. THE POLYPROPYLENE SHALL CONFORM TO ASTM D-4101. ASTM D-4101.
3. THE 1/2" GRADE 60 DEFORMED REINFORCING BAR SHALL MEET ASTM A-615.
4. STEP REFLECTORS OR BRIGHT COLORED STEPS REQUIRED.

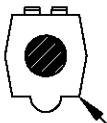

SECTION B-B

SECTION C-C

INSTALLATION

1. THE STEP CAN BE CAST IN PLACE.
2. DRIVEN INTO PREFORMED HOLES WITH CONCRETE CURED TO 3,000 PSI MINIMUM.
3. DRIVEN INTO 2 PARALLEL 1" DIAMETER HOLES DRILLED 13" OR 10" ON CENTER, 3-1/2" DEEP.
4. DRILL 2 1-1/8" OR 1-1/4" HOLES, 3-1/2" DEEP, APPLY EPOXY IN THE HOLE AND AROUND THE BARBS OF THE STEP. PUSH THE STEP INTO THE HOLES ALLOWING THE EPOXY TO FLOW OUT TO THE SQUARE SHOULDER OF THE STEP.

   ANY OF THE ABOVE METHODS WILL RESIST A PULLOUT FORCE OF OVER 1,500 LBS.

CITY OF KIRKLAND	
PLAN NO. CK-S.14	
CITY OF KIRKLAND WASHINGTON	LADDER AND MANHOLE STEPS

LAST REVISED: 3/26/08

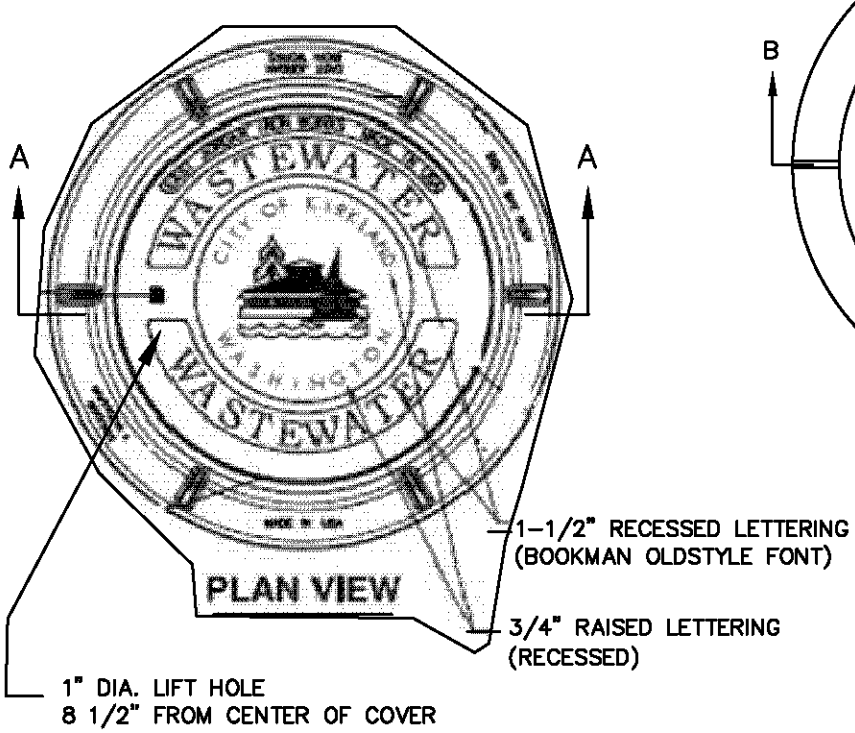

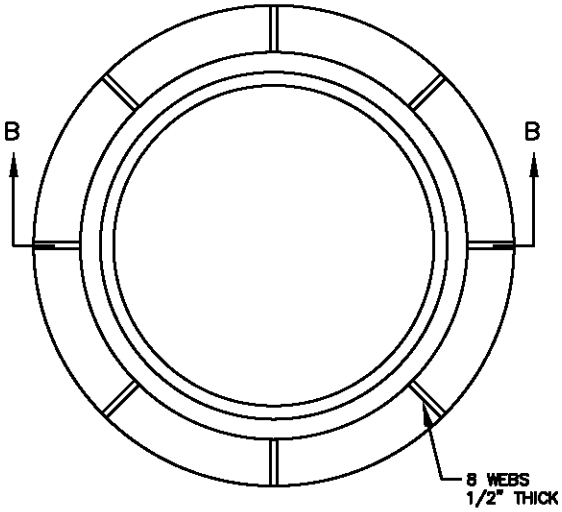

RING PLAN

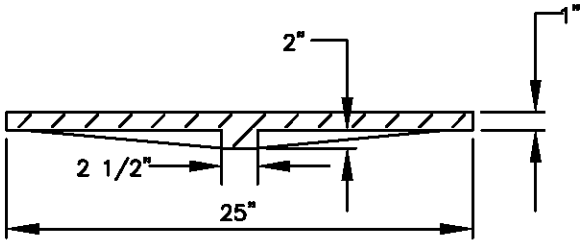

COVER SECTION A–A

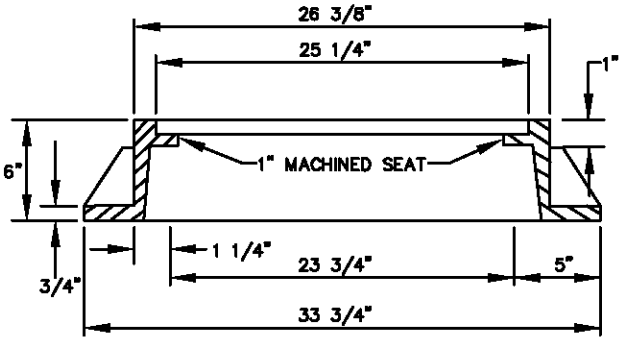

FRAME SECTION B–B

NOTES:

1. COVER MATERIAL IS DUCTILE IRON ASTM A48 CL35B, WITH A MINIMUM WEIGHT OF 141 LBS.
2. FRAME MATERIAL IS DUCTILE IRON ASTM A48 CL35B, WITH A MINIMUM WEIGHT OF 134 LBS.
3. COVERS SHALL HAVE THE TEXT IN LETTERING NOTED ON PLAN VIEW ABOVE.
4. PRODUCT SUPPLIED BY EAST JORDAN IRON WORKS, OLYMPIC FOUNDRY, OR APPROVED EQUAL.

CITY OF KIRKLAND	
PLAN NO. CK–S.15	
CITY OF KIRKLAND WASHINGTON	24" MANHOLE RING AND COVER

LAST REVISED:01/07/08

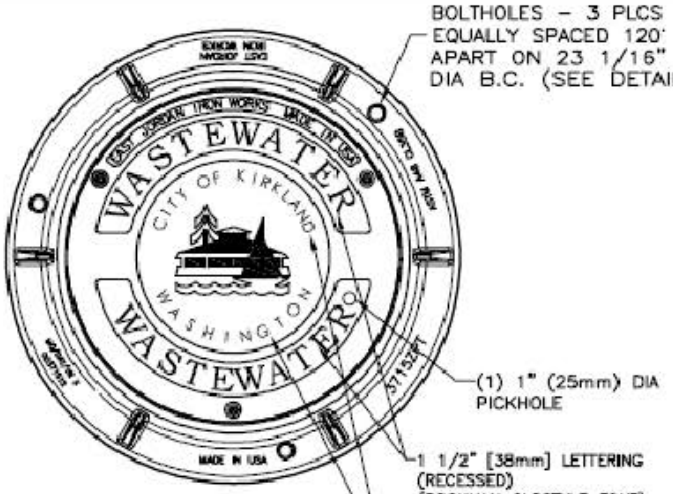

PLAN VIEW

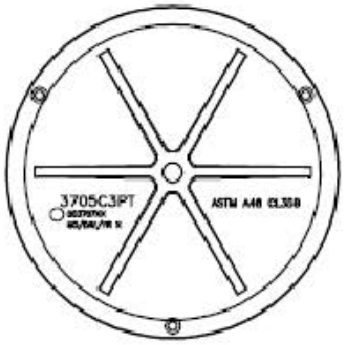

BOTTOM VIEW

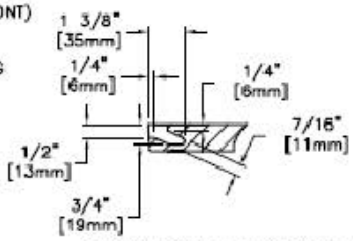

PICKHOLE DETAIL

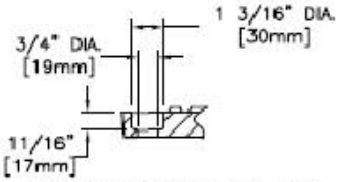

BOLTHOLE DETAIL

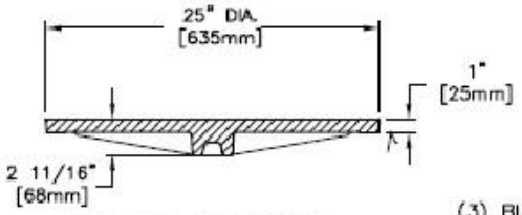

COVER SECTION

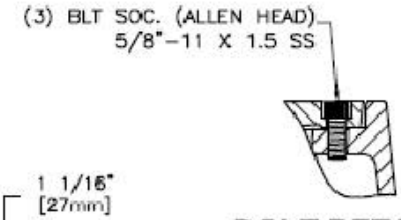

BOLT DETAIL

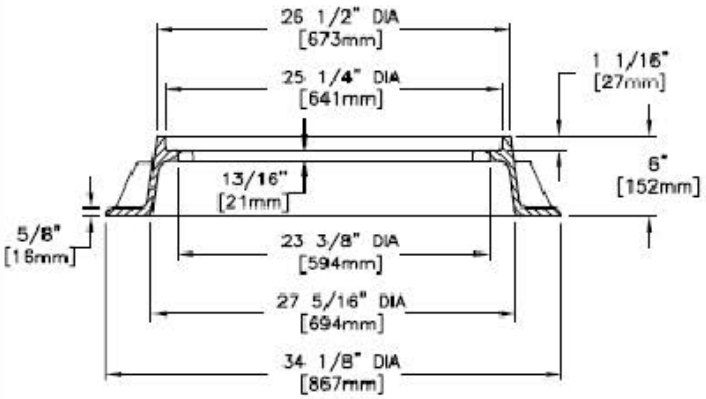

FRAME SECTION

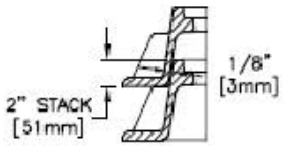

STACKING DETAIL

NOTES

1. USE WITH THREE LOCKING BOLTS 5/8"–11 BOLT SOCKET (ALLEN HEAD), 2" LONG DRILL HOLES SPACED 120° APART ON 23–1/16" DIA B.C.
2. COVER MATERIAL IS DUCTILE IRON ASTM A48 CL35B, WITH A MINIMUM WEIGHT OF 141 LBS.
3. FRAME MATERIAL IS DUCTILE IRON ASTM A48 CL35B, WITH A MINIMUM WEIGHT OF 134 LBS.
4. DRILL AND TAP THREE 5/8"–11 NC HOLES THROUGH RING AT 120° AND 23–1/16" DIA B.C.
5. PRODUCT SUPPLIED BY EAST JORDAN IRON WORKS, OLYMPIC FOUNDRY, OR APPROVED EQUAL.

CITY OF KIRKLAND	
PLAN NO. CK–S.16	
CITY OF KIRKLAND WASHINGTON	24" MANHOLE FRAME W/LOCKING COVER

LAST REVISED: 03/23/09

24 INCH MANHOLE COVER AND FRAME

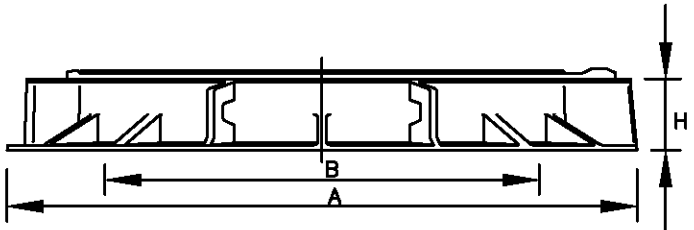

DIMENSIONS (INCHES)			WEIGHT (lbs)	
A	B	H	COVER AND FRAME	COVER ONLY
33 1/2"	24	4	195	122

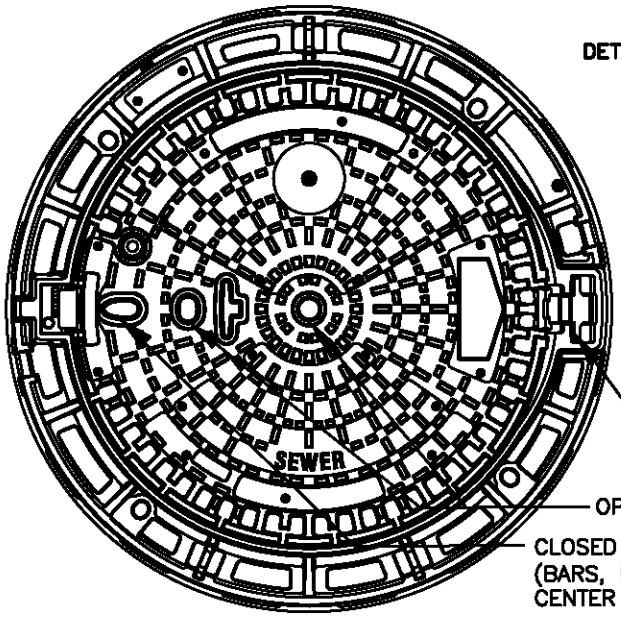

DETAIL A : LIFTING HOLES

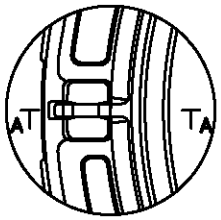

A–A

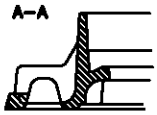

DIRECTION OF TRAFFIC

OPEN HINGE

OPEN VENT HOLE

CLOSED KEY HOLE FOR USE WITH STANDARD TOOLS
(BARS, PICKAXE, OR HOOK)
CENTER STEPS UNDER THIS HOLE.

NOTES:

1. VERIFY SLOTTED FRAMES ARE THOROUGHLY FILLED IN WITH MORTAR FOR EFFICIENT INTERACTION WITH IRON AND STRUCTURE.
2. VERIFY BEDDING MORTAR IS NOT IN CONTACT WITH EITHER HINGE HOUSING OR CUSHIONING INSERT.
3. VERIFY GASKET IS PROPERLY CLAMPED ON ITS FRAME GROOVE ALONG ITS ENTIRE LENGTH.
4. GASKET CAN BE REPLACED; USE ONLY ORIGINAL PAMREX GASKET, AVAILABLE THROUGH AUTHORIZED DEALERS.
5. PAMREX 24 INCH IS FITTED WITH AN INFILTRATION PLUG LOCATED IN THE HINGE HOUSING OF THE FRAME. VERIFY PLUG IS PROPERLY INSTALLED BEFORE INSTALLING THE FRAME.
6. REQUIRED ON ARTERIALS ONLY (PRINCIPLE AND MINOR). MAY ALSO BE REQUIRED ON SOME HIGH VOLUME COLLECTORS BY PUBLIC WORKS ENGINEER.
7. TO BE USED FOR SEWER AND STORM MANHOLES ON NEW AND REPLACED LIDS.
8. TO BE USED IN TRAVEL LANES ONLY. PARKING LANES, BIKE LANES, CENTER TURN LANES, ETC. ARE EXEMPT.
9. CITY OF KIRKLAND LOGO NOT REQUIRED.
10. LID MUST BE COVERED WITH TAR PAPER BEFORE OVERLAY.

CITY OF KIRKLAND	
PLAN NO. CK–S.16A	
CITY OF KIRKLAND WASHINGTON	MODIFIED 24" MANHOLE FRAME W/ LOCKING COVER

LAST REVISED: 1/15/14

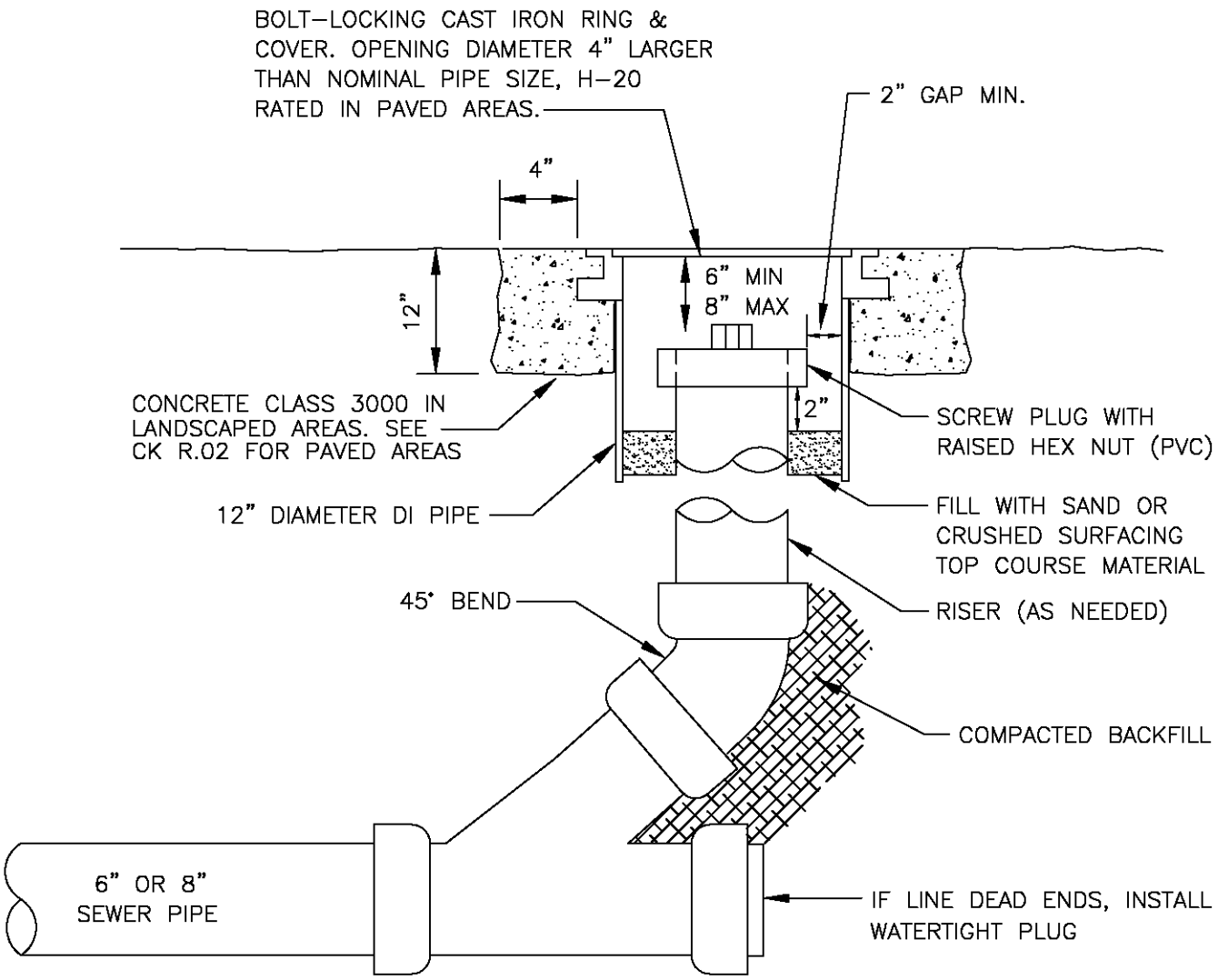

NOTES

1. CAST IRON COVER SHALL READ "SEWER".

2. LOCKING BOLTS FOR COVER SHALL BE 5/8" –11 NC STAINLESS STEEL TYPE 304 SOCKET (ALLEN) HEAD BOLTS, 2 INCHES LONG.

CITY OF KIRKLAND	
PLAN NO. CK–S.17	
CITY OF KIRKLAND WASHINGTON	CLEANOUT

LAST REVISED: 11/30/99

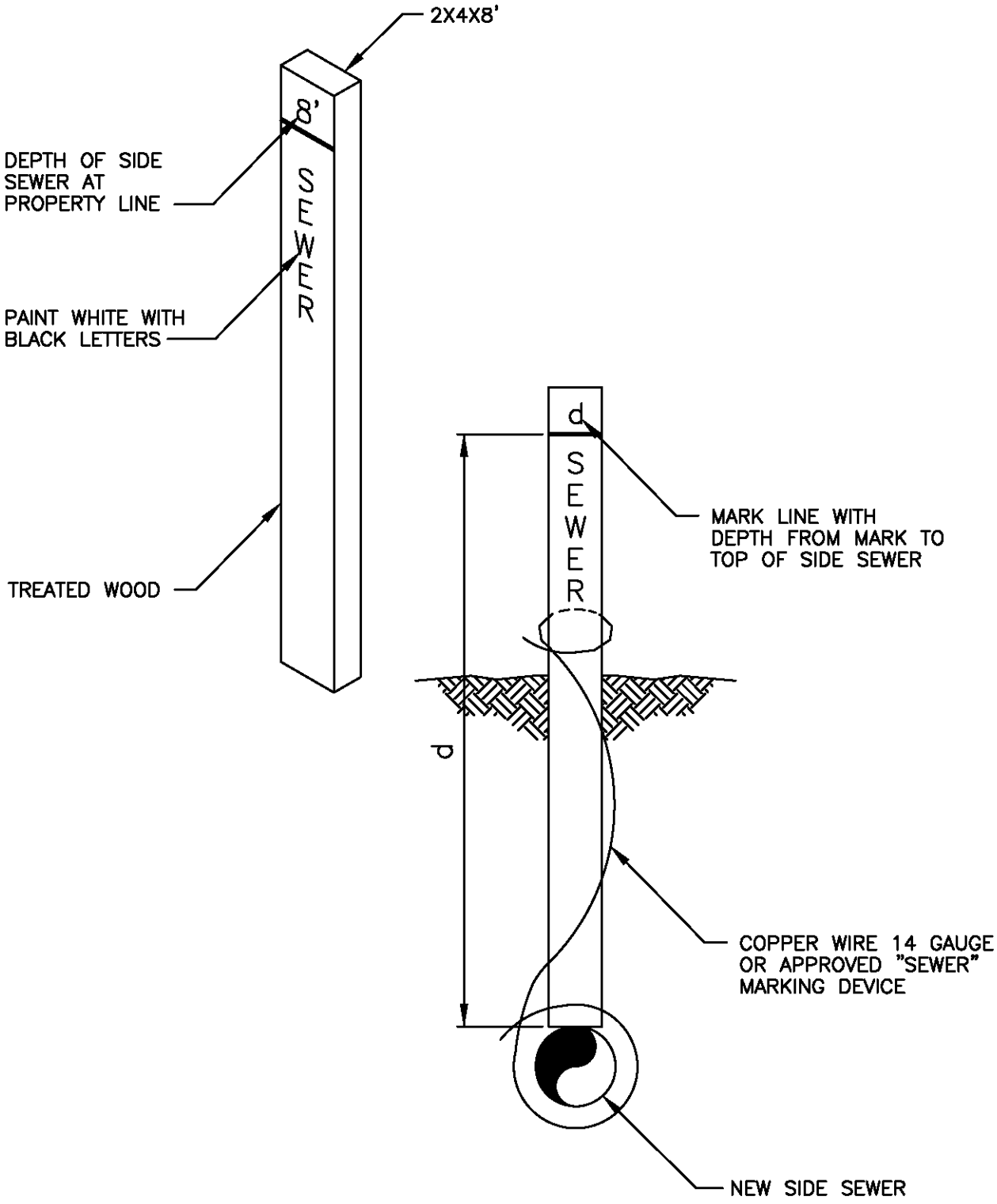

CITY OF KIRKLAND	
PLAN NO. CK-S.18	
CITY OF KIRKLAND WASHINGTON	SIDE SEWER MARKER POST

LAST REVISED: 11/30/99

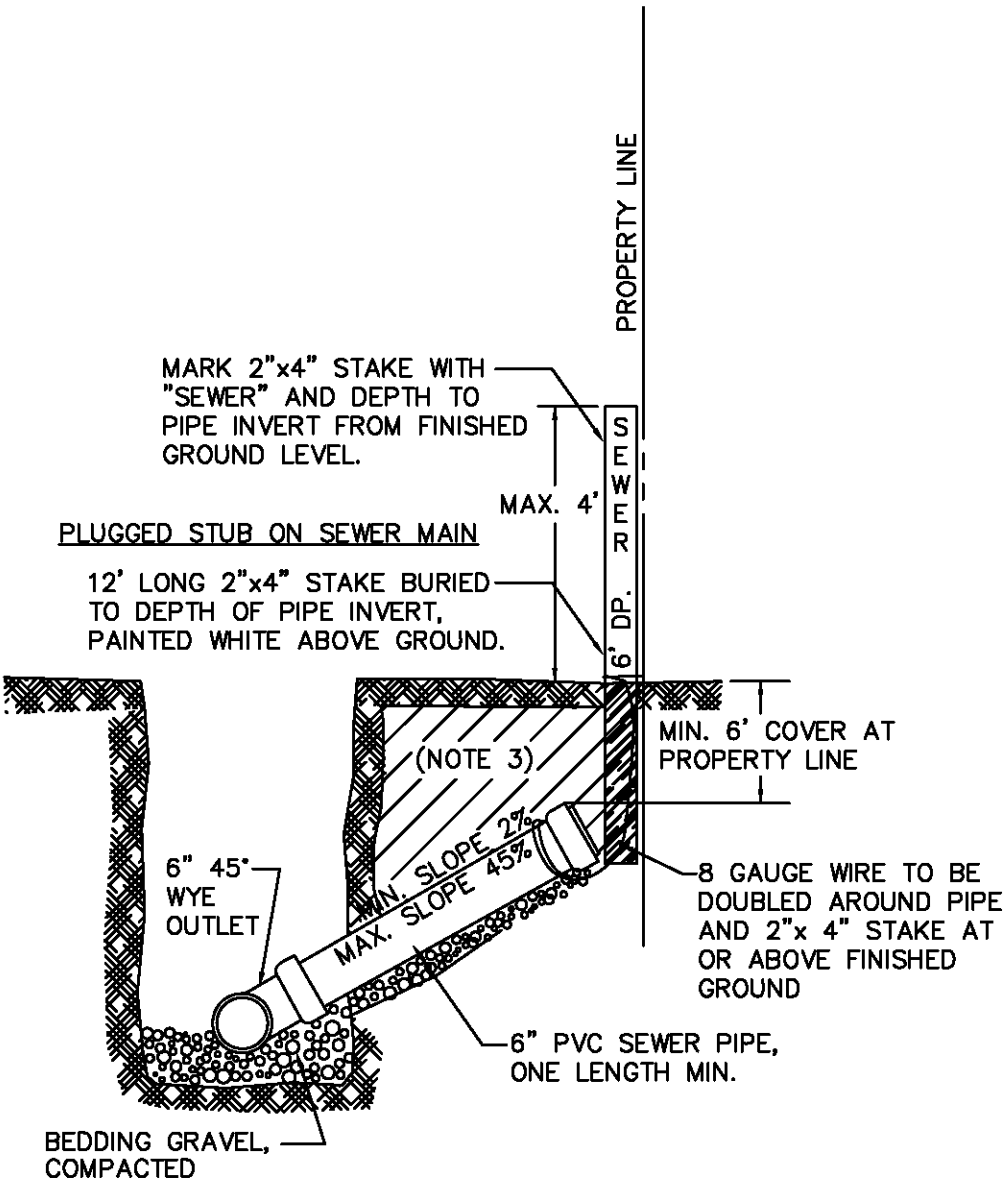

NOTES:

1. WHERE SIDE SEWER CONNECTS TO MANHOLE: INVERT OF SIDE SEWER SHALL BE EQUAL TO OR ABOVE MAIN SEWER CROWN, BUT NOT TO EXCEED 18" ABOVE INVERT OF MAIN SEWER. (FOR COMMERCIAL AND MULTIFAMILY APPLICATIONS ONLY)

2. UNLESS OTHERWISE INDICATED ON PLAN, SIDE SEWER SHALL BE MIN. OF 6' DEEP AT PROPERTY LINE, OR 5' LOWER THAN THE LOWEST ELEVATION, WHICHEVER IS LOWER.

3. TRENCH BACKFILL SHALL BE PER CITY OF KIRKLAND STD. PLAN NO. CK-S.01.

CITY OF KIRKLAND	
PLAN NO. CK-S.19	
CITY OF KIRKLAND WASHINGTON	SIDE SEWER STUB "PROFILE VIEW"

LAST REVISED: 11/30/99

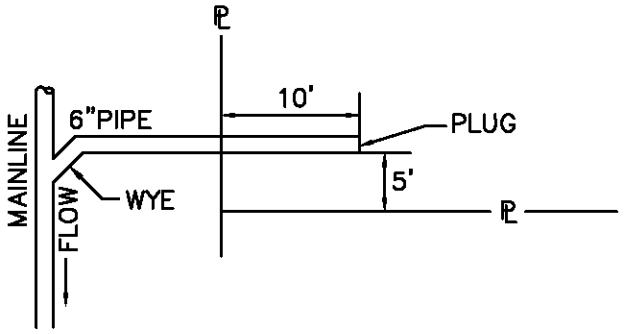

SINGLE SERVICE

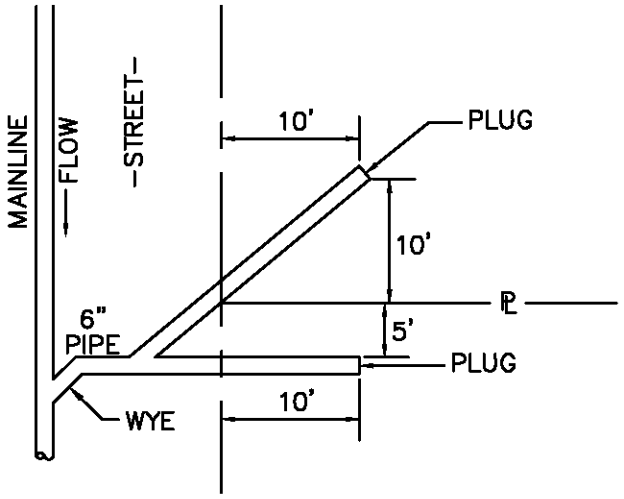

DOUBLE SERVICE

NOTES:

1. WHERE SIDE SEWER CONNECTS TO MANHOLE: INVERT OF SIDE SEWER SHALL BE EQUAL TO OR ABOVE MAIN SEWER CROWN, BUT NOT TO EXCEED 18" ABOVE INVERT OF MAIN SEWER. (FOR COMMERCIAL AND MULTIFAMILY APPLICATIONS ONLY)

2. UNLESS OTHERWISE INDICATED ON PLAN, SIDE SEWER SHALL BE MIN. OF 6' DEEP AT PROPERTY LINE, OR 5' LOWER THAN THE LOWEST ELEVATION, WHICHEVER IS LOWER.

3. TRENCH BACKFILL SHALL BE PER CITY OF KIRKLAND STD. PLAN NO. CK-S.01.

CITY OF KIRKLAND	
PLAN NO. CK-S.19A	
CITY OF KIRKLAND WASHINGTON	SIDE SEWER STUB "PLAN VIEW"

LAST REVISED: 11/30/00

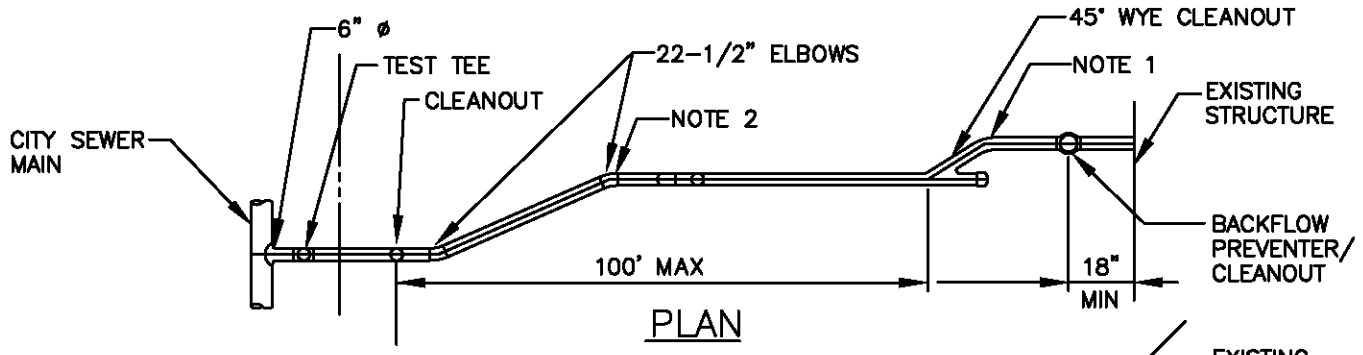

PLAN

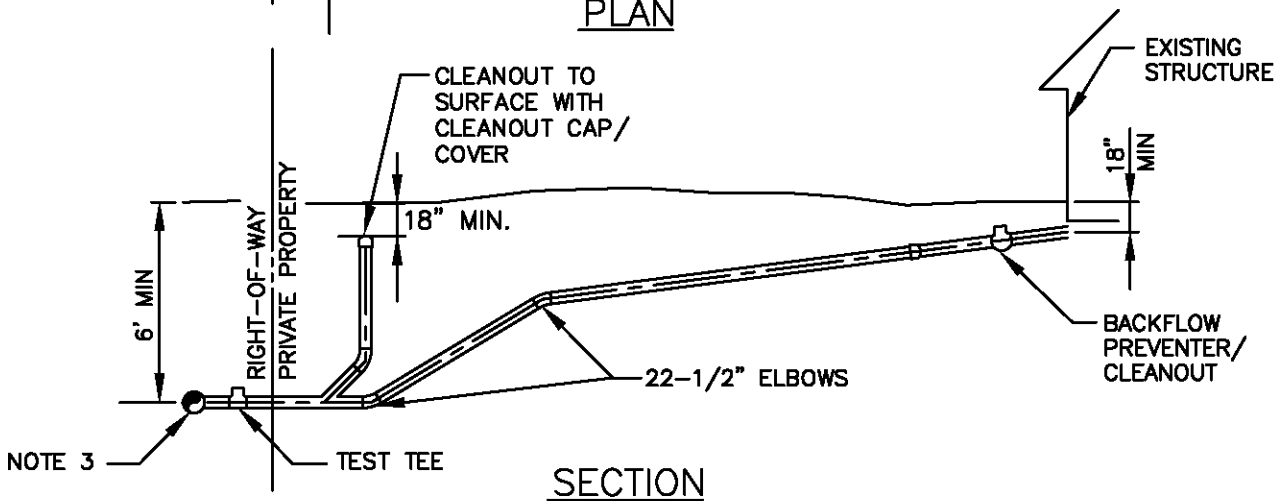

SECTION

NOTES

1. ELBOWS SHALL NOT BE GREATER THAN 45 DEGREES.
2. CLEAN OUT IS REQUIRED FOR EACH PIPE LENGTH GREATER THAN 100' AND FOR EACH 90 DEGREES ACCUMULATED ELBOW PER 100'.
3. RIGHT-OF-WAY RESTORATION SHALL MATCH OR EXCEED THE ORIGINAL CONDITION AND BE IN ACCORDANCE WITH THE CITY STANDARD.
4. BACKFILL FOR PAVED AREA SHALL BE 3/4" MINUS CRUSHED SURFACING TOP COURSE, COMPACTED IN 12" LIFTS.
5. ALL HOUSE PLUMBING OUTLETS MUST BE CONNECTED TO THE SEWER. NO DOWNSPOUTS OR STORM DRAINAGE MAY BE CONNECTED TO THE SEWER SYSTEM.
6. 18" MINIMUM COVERAGE OF PIPE.
7. 6' MINIMUM COVERAGE AT PROPERTY LINE.
8. LAY PIPE IN STRAIGHT LINE BETWEEN BENDS. MAKE ALL CHANGES IN GRADE OR LINE WITH A 1/8 BEND OR WYE. 90 DEGREE CHANGE WITH 1/8 BEND AND WYE.
9. 6" SEWER PIPE MINIMUM SIZE IN STREET, AND ELSEWHERE AS DIRECTED BY ENGINEER. 2% MINIMUM GRADE (UNLESS DIRECTED BY ENGINEER) 50% MAXIMUM.
10. 4" SEWER PIPE MINIMUM SIZE ON PROPERTY. 2% MINIMUM GRADE, 100% (45 DEGREE) MAXIMUM.
11. TEST "T" WITH PLUG AT WYE.
12. CONSTRUCTION IN STREET MUST BE DONE BY A REGISTERED/LICENSED CONTRACTOR.
13. ALL CONSTRUCTION SHALL BE IN ACCORDANCE WITH CURRENT SIDE SEWER ORDINANCES.
14. ALL CONSTRUCTION REQUIRES A PERMIT AND PAYMENT OF FEE, COMPLETE LEGAL DESCRIPTION OF PROPERTY AND DIMENSIONS.
15. BACKFLOW PREVENTER (CHECK VALVE) IS REQUIRED:
    A. IF CONNECTED TO A COMBINED SIDE SEWER.
    B. IF CONNECTION AT HOUSE IS LOWER THAN BOTH UPSTREAM AND DOWNSTREAM MANHOLE LID.
16. AS-BUILT DRAWING SHOWING LOCATION OF SIDE SEWER IN RELATION TO THE HOUSE IS REQUIRED AFTER INSTALLATION.
17. BEDDING TO BE CLASS C (GRAVEL BORROW) FOR RIGID PIPE AND CLASS F (PEA GRAVEL) FOR FLEXIBLE PIPE (APWA), SECTION 61.
18. ASTM D-3034 OR SDR-35.

CITY OF KIRKLAND	
PLAN NO. CK-S.20	
CITY OF KIRKLAND WASHINGTON	RESIDENTIAL SIDE SEWER INSTALLATION

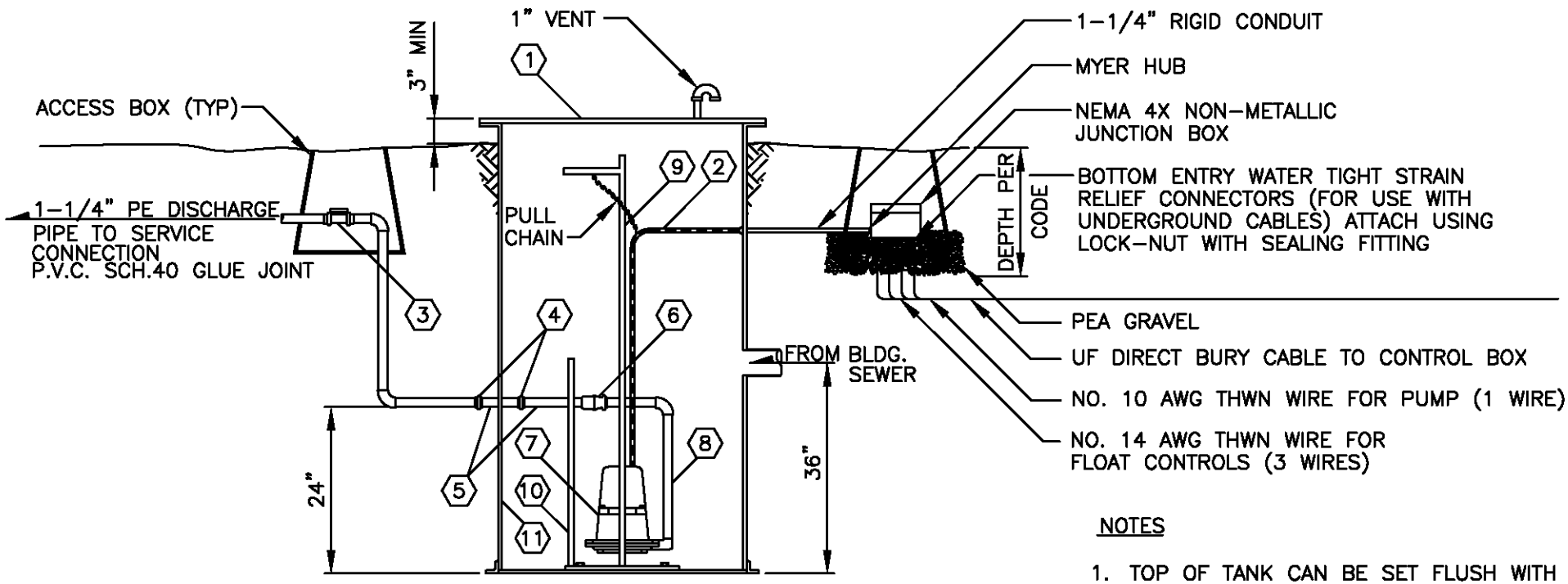

GRINDER LIFT STA. DETAIL

NTS

MATERIALS LIST

1. 24" DIA GALVANIZED COVER
2. POWER CONDUIT
3. 1-1/4" PVC TRUE UNION BALL VALVE (SS) HAYWARD OR EQUAL
4. 1-1/4" GALVANIZED UNION
5. 1-1/4' GALVANIZED NIPPLES
6. CHECK VALVE AND PUMP DISCONNECT HYDROMATIC, GOULD OR EQUAL.
7. 2 HP GRINDER PUMP – SEE NOTES
8. 1-1/4" GALVANIZED PIPING, APPROXIMATELY 1.2' LONG
9. HOT DIPPED GALVANIZED STEEL RAIL GUIDE SYSTEM
10. HOT DIPPED GALVANIZED PUMP TECH SHORT RAIL
11. 24" X 60" FIBERGLASS TANK

NOTES

1. TOP OF TANK CAN BE SET FLUSH WITH GROUND, IF A CONCRETE PAD IS POURED AROUND THE LIFT STATION AND SLOPED AWAY FROM THE STATION. KEEP ROCKS AND DEBRIS OUT OF STATION.
2. ACCESS BOX:
   TRAFFIC AREAS – EQUAL TO CARSON MODEL 1419-14B WITH 1419-2B COVER

   TRAFFIC AREAS– H-20 RATED CONCRETE BOX EQUAL TO FOGTITE B9-1/2 METER BOX

   LIDS SHALL BE MARKED ELECTRICAL OR SEWER RESPECTIVELY OR HAVE NO MARKINGS AT ALL.
3. CONTROL FLOATS NOT SHOWN FOR CLARITY.

CITY OF KIRKLAND WASHINGTON

CITY OF KIRKLAND

PLAN NO. CK-S.21

SINGLE FAMILY SIMPLEX SEWER LIFT STATION

LAST REVISED:01/07/08

LAST REVISED: 11/30/99

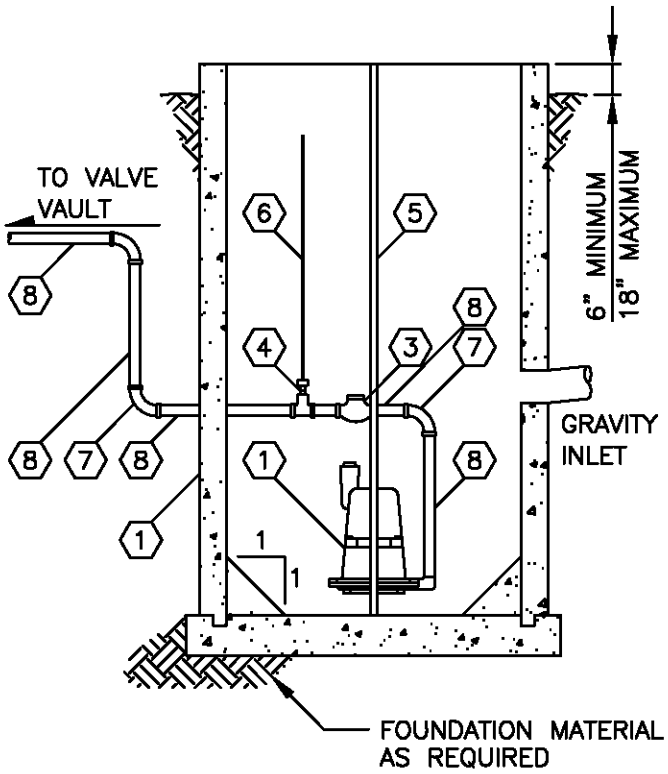

LIFT STATION ELEVATION

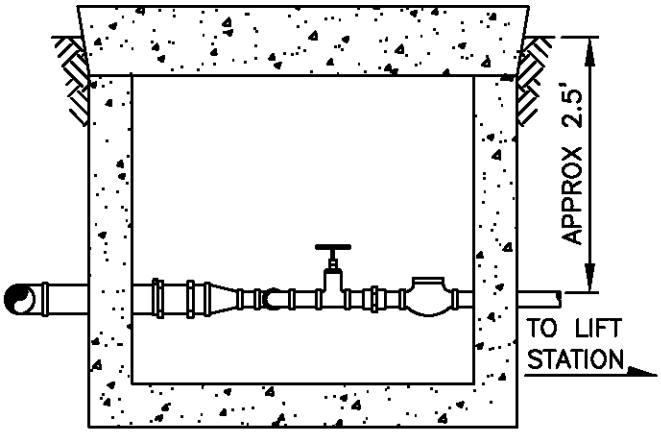

VALVE VAULT ELEVATION

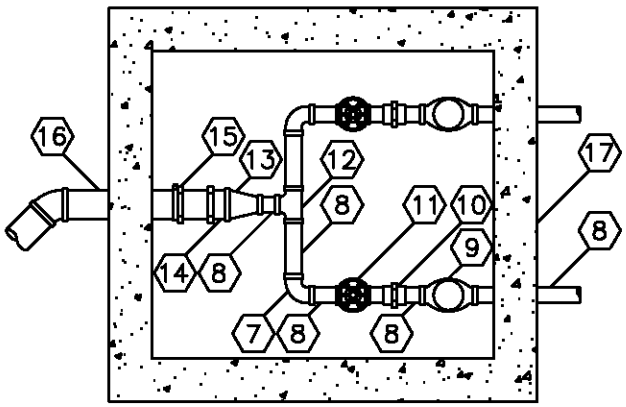

VALVE VAULT PLAN

EQUIPMENT SCHEDULE

ITEMS 1 THRU 6 BASED ON HYDR–O–RAIL, HYDR–O GRND DUPLEX PACKAGE LIFT STATION AS MANUFACTURED BY HYDROMATIC PUMP COMPANY.

1. 2 EXPLOSION–PROOF SUBMERSIBLE SEWAGE GRINDER PUMPS EQUAL TO HYDROMATIC 02FX500 5HP, 1750 RPM MOTOR. DESIGN POINT: GPM AT 54' TDH.
2. 60" LD CONCRETE MANHOLE WITH GROUTED HOPPER BOTTOM AS SHOWN.
3. 2" BALL CHECK AGAINST HYDRAULICALLY SEALED DISCHARGE FLANGE EQUAL TO HYDROMATIC.
4. 2" GATE VALVE
5. 1–1/2" GALVANIZED GUIDE RAILS (2 EACH PER PUMP)
6. GATE VALVE EXTENSION (1 EACH PER VALVE)
7. 2" C.I. 90° BEND (S X S)
8. 2" C.I. PIPE (S X S)
9. 2" BALL CHECK (S X S)
10. 2" UNION
11. 2" GATE VALVE (S X S)
12. 2" C. I. TEE
13. 2" X 2–1/2" C.I. REDUCER (S X S)
14. 2–1/2" C.I. PIPE (S X S)
15. 2–1/2" COUPLING – C.I. TO PVC
16. 2–1/2" PVC PIPE & FITTINGS – ASTM D 2241 SDR 26. SEE SITE PLAN FOR CONTINUATION.
17. CONCRETE VAULT – 3.5' H X 3.5' L X 3.5' W EQUAL TO UTILITY VAULT MODEL 444–LA WITH 44–332P COVER. DRAIN TO NEAREST STORM DRAIN FACILITY.

CITY OF KIRKLAND	
PLAN NO. CK– S.22	
CITY OF KIRKLAND WASHINGTON	COMMERCIAL AND MULTI–FAMILY DUPLEX SEWER LIFT STATION

LAST REVISED: 11/30/99

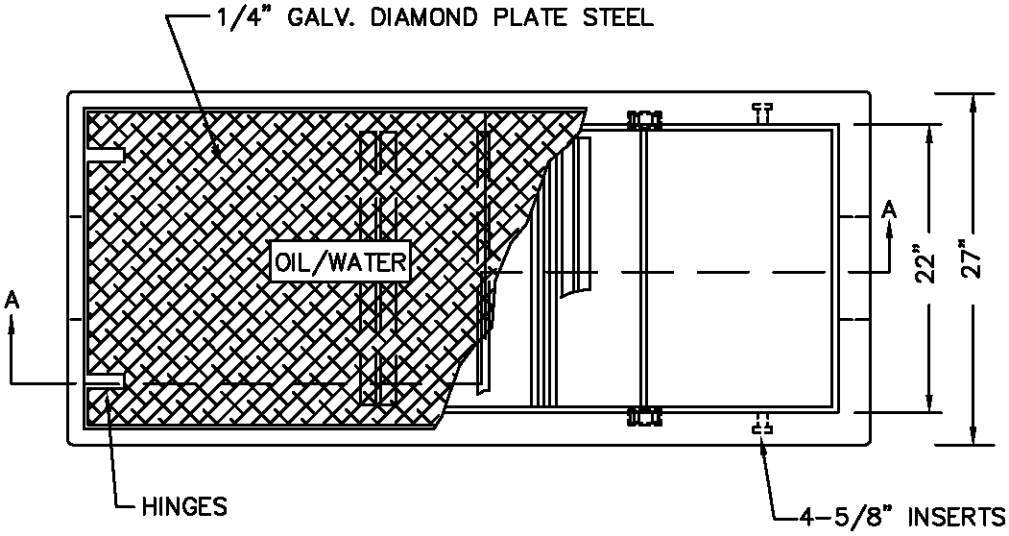

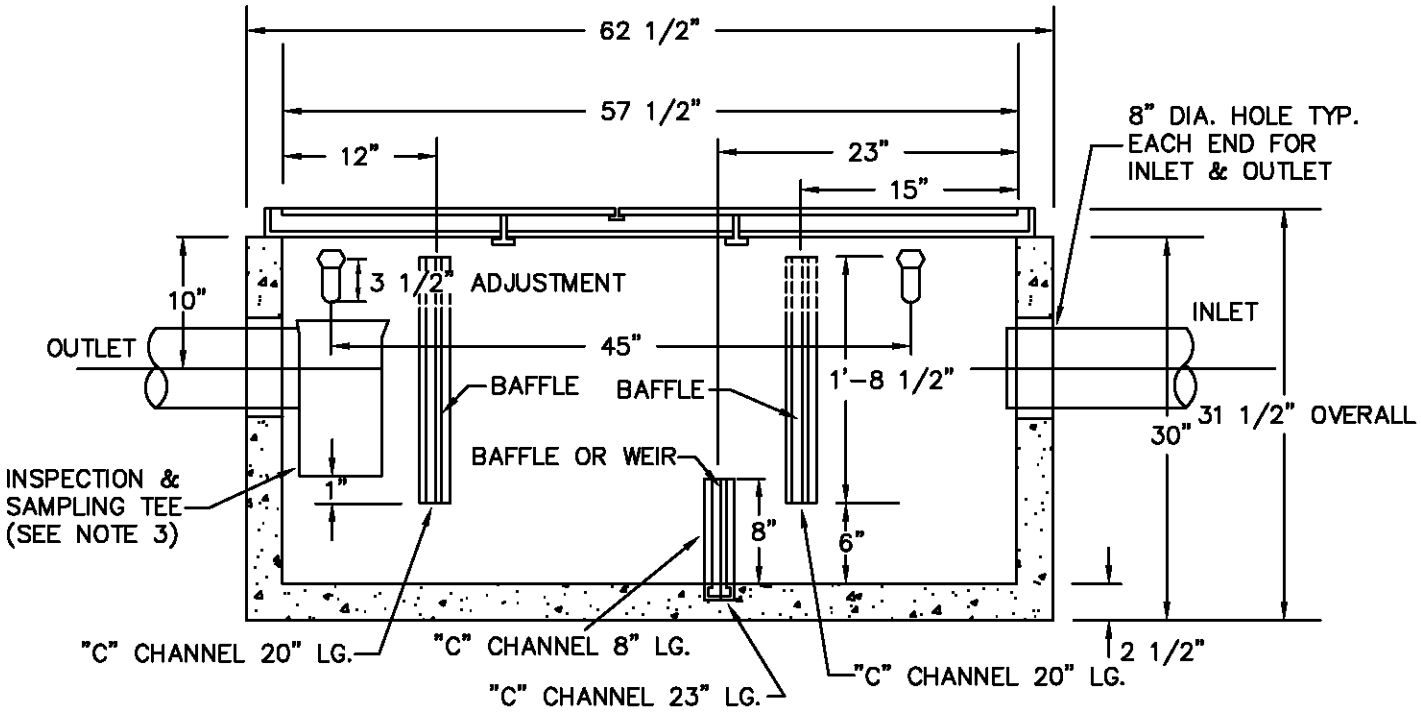

SECTION A-A

NOTES:

1. UTILITY VAULT COMPANY, INC., #25-SA, OR EQUAL. PRESET VAULT SHALL HAVE KNOCKOUTS AT ALL PIPE OPENINGS. IF KNOCKOUTS ARE NOT PRESENT THEN PIPE OPENINGS SHALL BE CORE-DRILLED. PIPE OPENINGS SHALL BE 2" LARGER THAN PIPE DIAMETER.
2. LOCATE WITHIN 20 FEET OF DRIVE FOR ACCESS BY MAINTENANCE VEHICLE.
3. INSPECTION AND SAMPLING TEE TO BE INSTALLED BY CONTRACTOR. LINE-SIZED PVC TEE SHALL BE USED WHERE LINE IS 6" DIA. OR GREATER. SIX INCH PVC TEE SHALL BE USED WHERE LINE-SIZE IS LESS THAN 6" DIA.
4. FILL WITH CLEAN WATER PRIOR TO STARTUP OF SYSTEM.
5. GRAY AND BLACK WATER SHALL BE CARRIED BY SEPARATE SIDE SEWER.
6. CONNECTIONS TO CONCRETE WALLS WITH P.V.C. PIPE REQUIRE KOR-N-SEAL CONNECTOR. SEAL ALL PIPE CONNECTIONS WITH NON-SHRINK GROUT.

CITY OF KIRKLAND	
PLAN NO. CK-S.23	
CITY OF KIRKLAND WASHINGTON	100 GALLON BAFFLE TYPE OIL/WATER SEPARATOR

LAST REVISED: 11/30/99

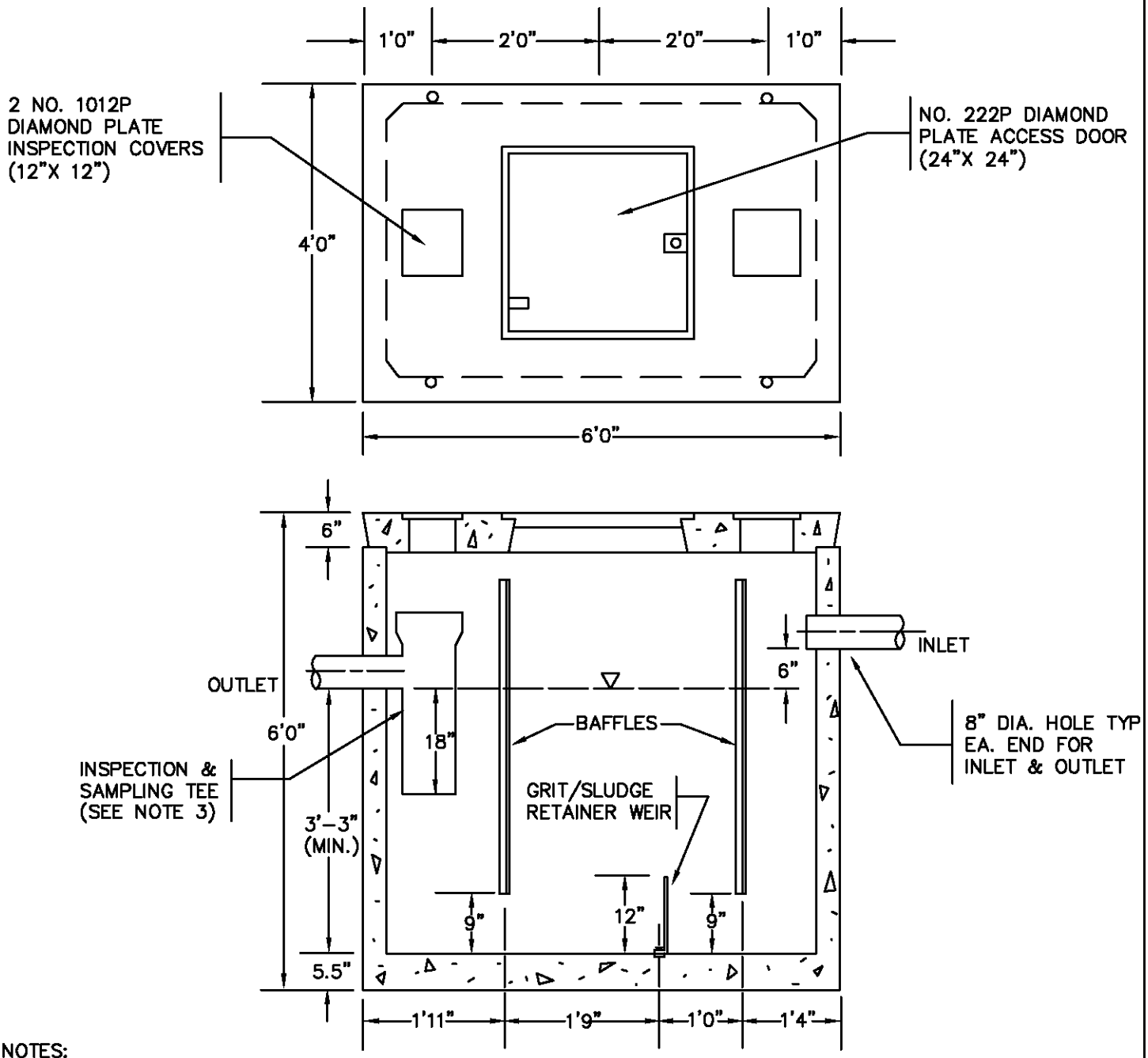

NOTES:

1. UTILITY VAULT COMPANY, INC., #660-SA, OR EQUAL. PRESET VAULT SHALL HAVE KNOCKOUTS AT ALL PIPE OPENINGS. IF KNOCKOUTS ARE NOT PRESENT THEN PIPE OPENINGS SHALL BE CORE-DRILLED. PIPE OPENINGS SHALL BE 2" LARGER THAN PIPE DIAMETER.
2. LOCATE WITHIN 20 FEET OF DRIVE FOR ACCESS BY MAINTENANCE VEHICLE.
3. INSPECTION AND SAMPLING TEE TO BE INSTALLED BY CONTRACTOR. LINE-SIZED PVC TEE SHALL BE USED WHERE LINE IS 6" DIA. OR GREATER. SIX INCH PVC TEE SHALL BE USED WHERE LINE-SIZE IS LESS THAN 6" DIA.
4. FILL WITH CLEAN WATER PRIOR TO STARTUP OF SYSTEM.
5. GRAY AND BLACK WATER SHALL BE CARRIED BY SEPARATE SIDE SEWER.
6. CONNECTIONS TO CONCRETE WALLS WITH P.V.C. PIPE REQUIRE KOR-N-SEAL CONNECTOR. SEAL ALL PIPE CONNECTIONS WITH NON-SHRINK GROUT.

CITY OF KIRKLAND

PLAN NO. CK-S.24

CITY OF KIRKLAND WASHINGTON

450 GALLON BAFFLE TYPE OIL/WATER SEPARATOR

LAST REVISED: 11/30/99

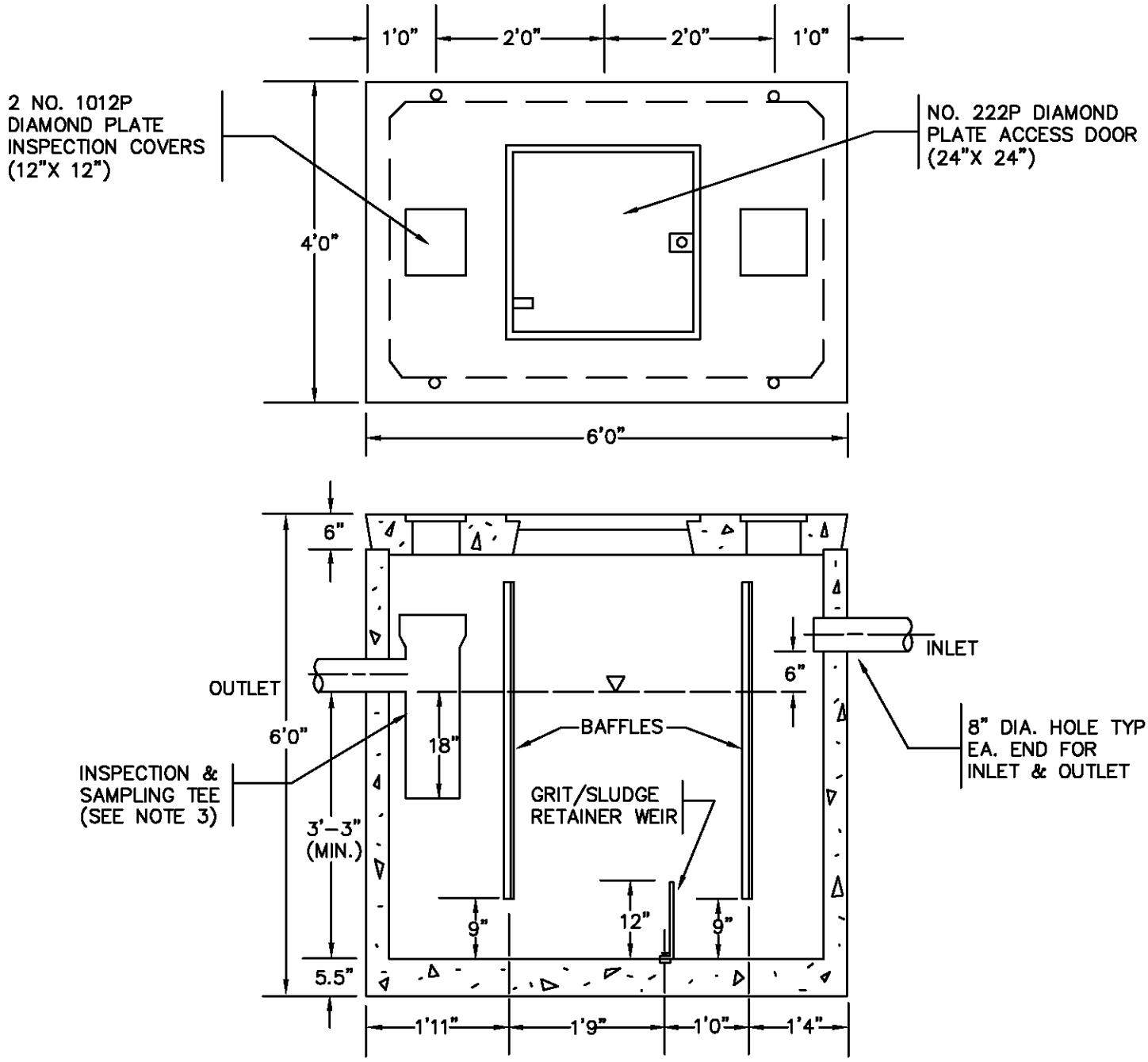

NOTES:

1. UTILITY VAULT COMPANY, INC., #577-SA, OR EQUAL. PRESET VAULT SHALL HAVE KNOCKOUTS AT ALL PIPE OPENINGS. IF KNOCKOUTS ARE NOT PRESENT THEN PIPE OPENINGS SHALL BE CORE-DRILLED. PIPE OPENINGS SHALL BE 2" LARGER THAN PIPE DIAMETER.
2. LOCATE WITHIN 20 FEET OF DRIVE FOR ACCESS BY MAINTENANCE VEHICLE.
3. INSPECTION AND SAMPLING TEE TO BE INSTALLED BY CONTRACTOR. LINE-SIZED PVC TEE SHALL BE USED WHERE LINE IS 6" DIA. OR GREATER. SIX INCH PVC TEE SHALL BE USED WHERE LINE-SIZE IS LESS THAN 6" DIA.
4. FILL WITH CLEAN WATER PRIOR TO STARTUP OF SYSTEM.
5. GRAY AND BLACK WATER SHALL BE CARRIED BY SEPARATE SIDE SEWER.
6. CONNECTIONS TO CONCRETE WALLS WITH P.V.C. PIPE REQUIRE KOR-N-SEAL CONNECTOR. SEAL ALL PIPE CONNECTIONS WITH NON-SHRINK GROUT.

WATER DEPTH	GALLONS	FLOW RATE AT 45 MINUTE RETENTION
4'-0"	800	17.8 G.P.M.
5-0"	1000	22.2 G.P.M.

CITY OF KIRKLAND

PLAN NO. CK-S.25

CITY OF KIRKLAND WASHINGTON

800 & 1000 GALLON BAFFLE TYPE OIL/ WATER SEPARATOR

LAST REVISED: 11/30/99

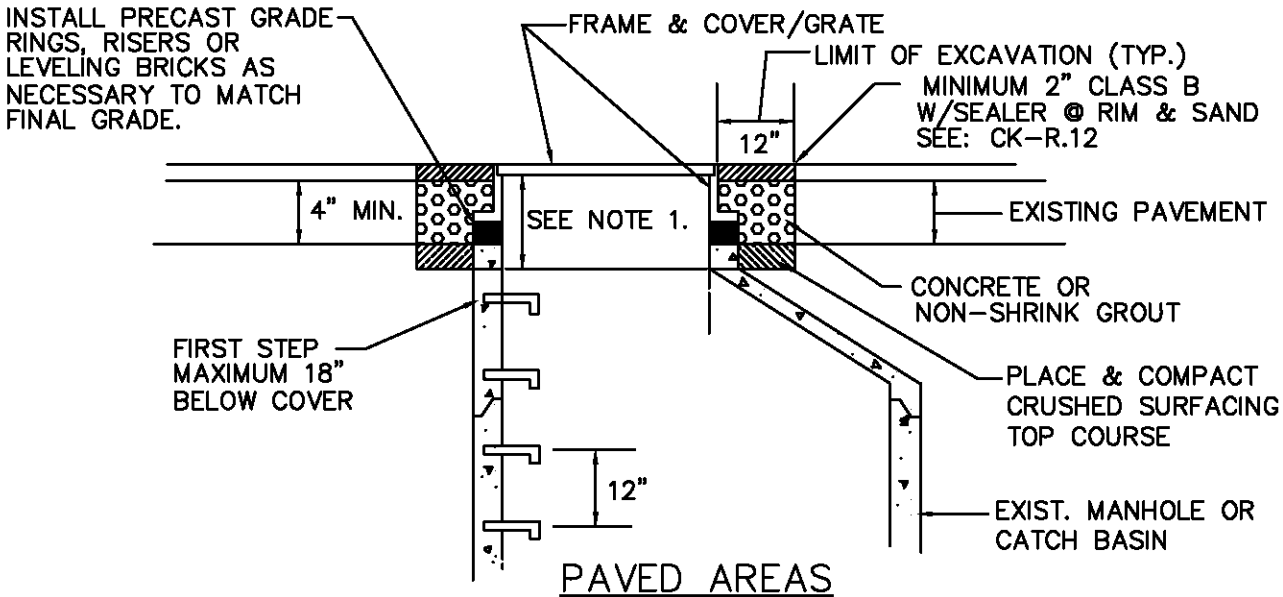

PAVED AREAS

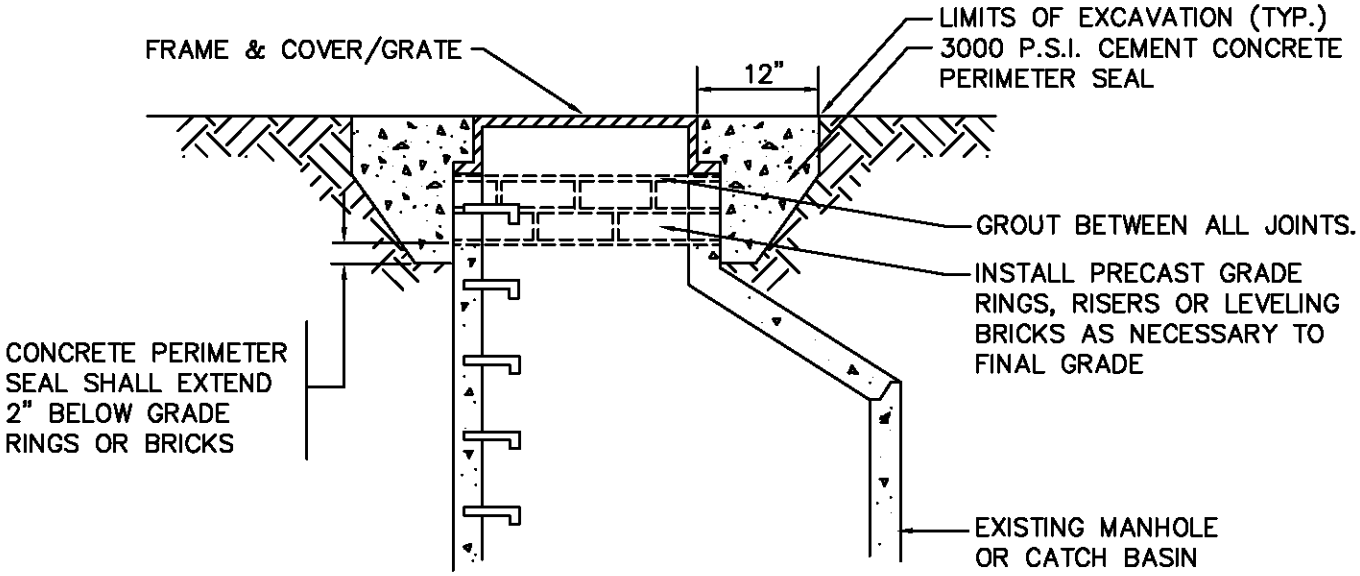

UNPAVED AREAS

NOTES:

1. WHERE DEPTH OF NECK EXCEEDS 18 INCHES, ADJUST MANHOLE/CATCH BASIN TO GRADE BY INSERTING NEW BARREL SECTION BETWEEN THE CONE/SLAB AND EXISTING BARREL.
2. GRADE RINGS, RISERS, BRICK AND FRAME SHALL BE SET IN 3/4" NON-SHRINK GROUT, GROUT BETWEEN ALL JOINTS. ALL SURFACES MUST BE CLEAN OF DEBRIS AND DIRT, AND WETTED PRIOR TO GROUTING. GROUT SMOOTH INSIDE AND OUTSIDE SURFACES.
3. STEPS OR HAND HOLDS SHALL BE ADDED AS NEEDED.
4. PRECAST GRADE RINGS AND RISERS MUST BE CAST WITH GROOVE TO ALLOW FIELD INSTALLATION OF SAFETY STEP.
5. REPLACE EXISTING FRAME AND COVER/GRATE IF NON-STANDARD.
6. IF REQUIRED: LOCKING MH FRAMES SHALL BE POSITIONED WITH ONE LUG CENTERED OVER STEPS.

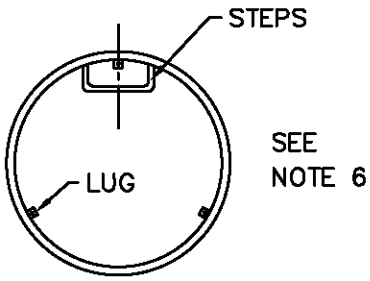

LOCKING MH FRAME
PLAN VIEW

CITY OF KIRKLAND	
PLAN NO. CK-S.26	
CITY OF KIRKLAND WASHINGTON	MANHOLE FRAME AND GRATE ADJUSTMENT

LAST REVISED: 11/30/99

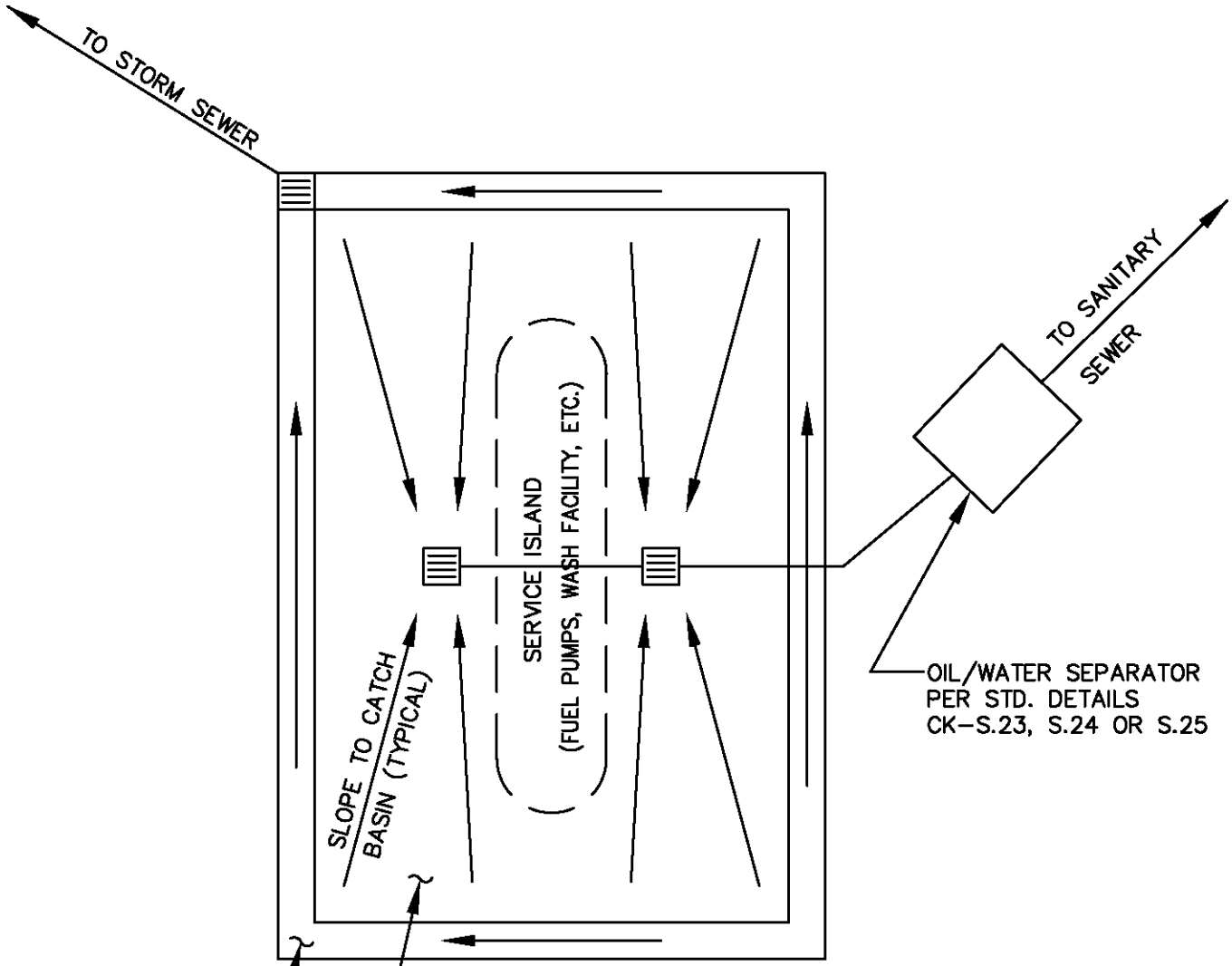

OIL/WATER SEPARATOR
PER STD. DETAILS
CK–S.23, S.24 OR S.25

UNCOVERED PAVED VEHICLE SERVICE AREA.
NOTE: UNCOVERED AREA GRADED TO DRAIN TO SANITARY SEWER SHALL NOT EXCEED 200 SQ. FT. AREAS OVER 200 SQ. FT. REQUIRE ROOF, WITH ROOF DRAINING TO STORM SYSTEM.

PAVED GUTTER. SLOP TO STORM SEWER INLET.
NOTE: GUTTER NOT REQUIRED WHERE SUROUNDING GRADE DRAINS AWAY FROM SERVICE AREA.

CITY OF KIRKLAND	
PLAN NO. CK–S.27	
CITY OF KIRKLAND WASHINGTON	PAVED VEHICLE SERVICE AREA DRAINAGE DETAIL

LAST REVISED: 11/30/99

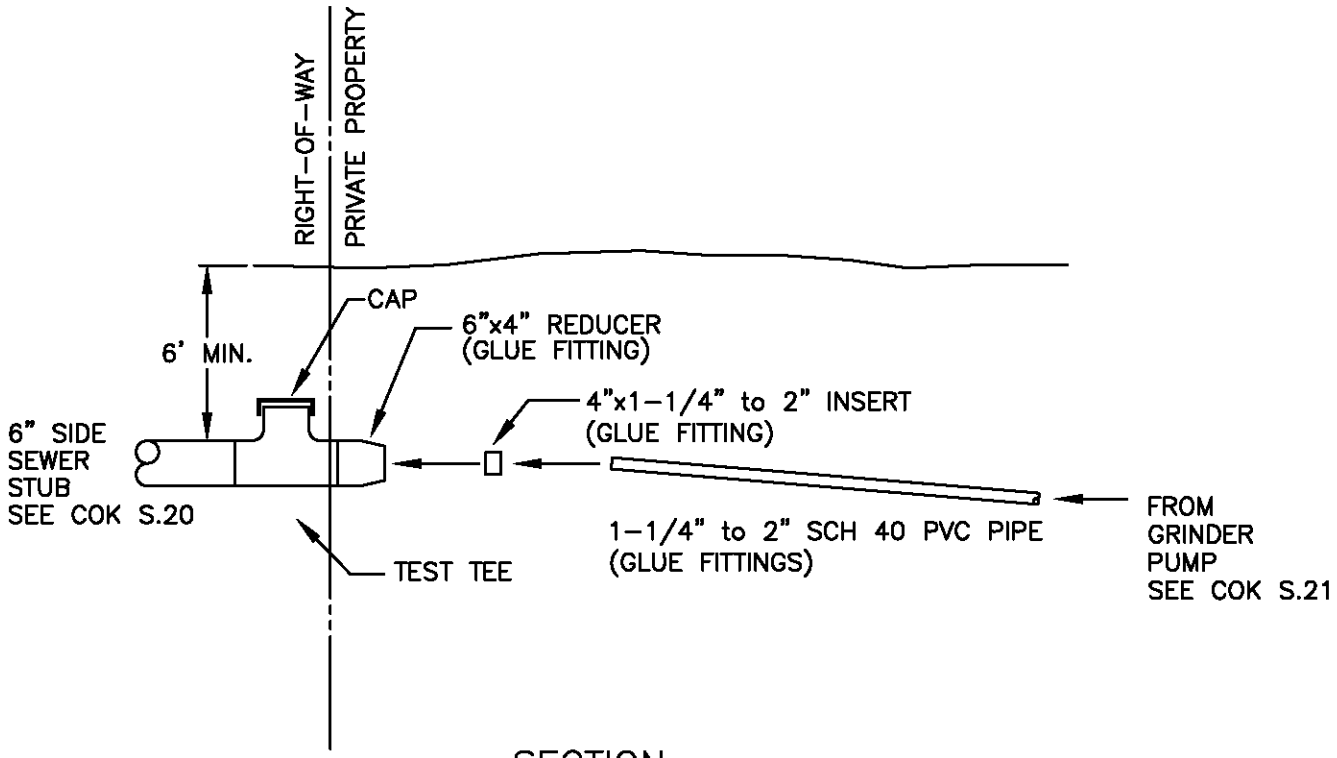

SECTION

NOTES

1. GRINDER PUMP DISCHARGE LINE MUST FLOW INTO A 6 INCH P.V.C. GRAVITY LINE. SIDE SEWER STUB.
2. 6 FOOT MINIMUM COVERAGE AT PROPERTY LINE AND IN RIGHT-OF-WAY.
3. 18 INCH MINIMUM COVERAGE OF PIPE ON PRIVATE PROPERTY.
4. RIGHT OF WAY RESTORATION SHALL MATCH OR EXCEED THE ORIGINAL CONDITION AND BE IN ACCORDANCE WITH THE CITY STANDARD.
5. BEDDING TO BE CLASS F PEA GRAVEL FOR GRINDER PUMP FORCE MAIN.
6. GRINDER PUMP FORCE MAIN SHALL BE LAID STRAIGHT WITH MINIMUM DEFLECTION.
7. PROTECTIVE STEEL CASING IS REQUIRED IF:
   A. LESS THAN 3 FEET OF COVERAGE IS ATTAINABLE UNDER A DRIVING SURFACE.
   B. UTILITY SEPARATION IS LESS THAN ADEQUATE.

CITY OF KIRKLAND	
PLAN NO. CK-S.28	
CITY OF KIRKLAND WASHINGTON	SINGLE FAMILY SIMPLEX SEWER LIFT STATION GRAVITY/FORCE-MAIN CONNECTION

LAST REVISED:02/12/10

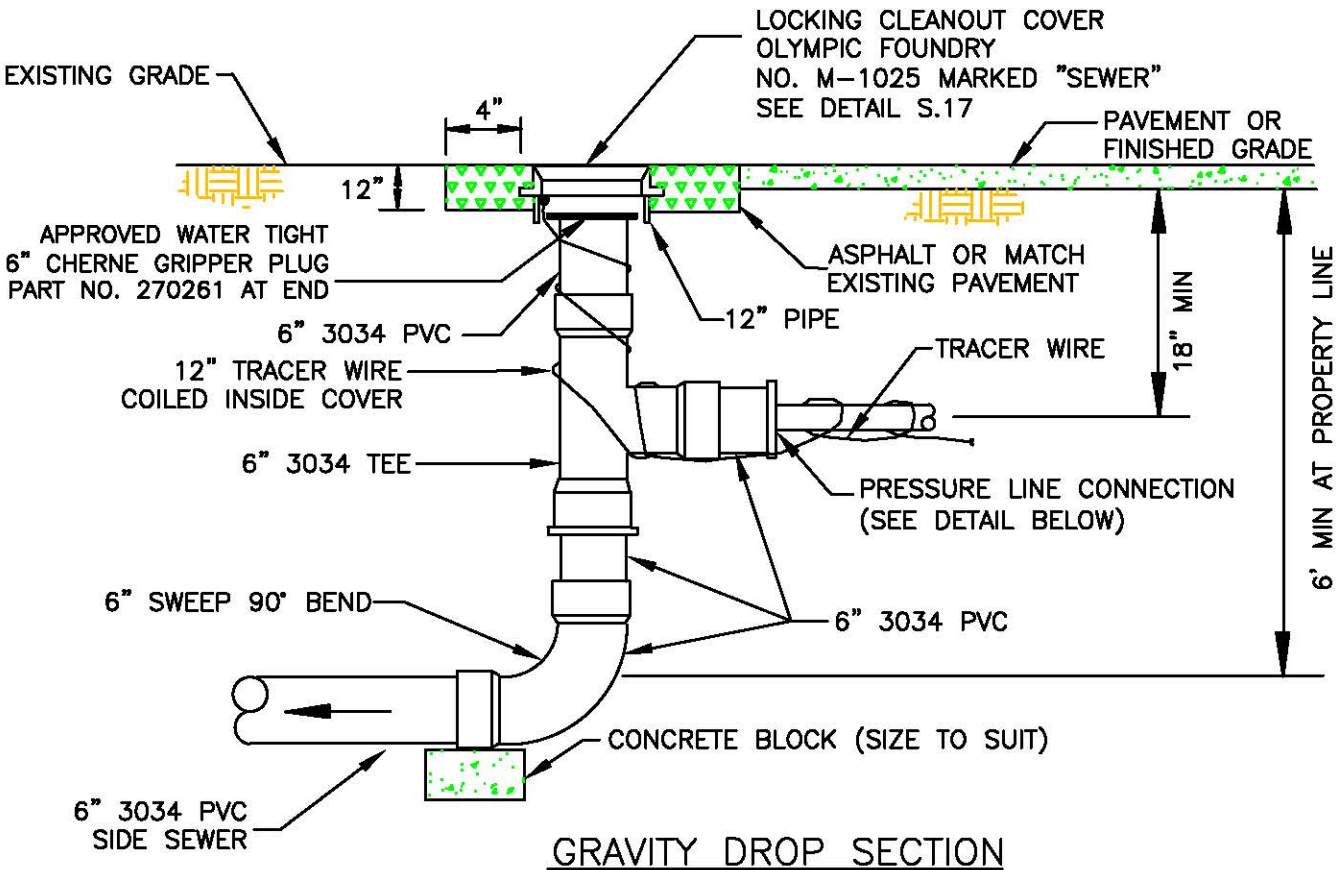

GRAVITY DROP SECTION

NOT TO SCALE

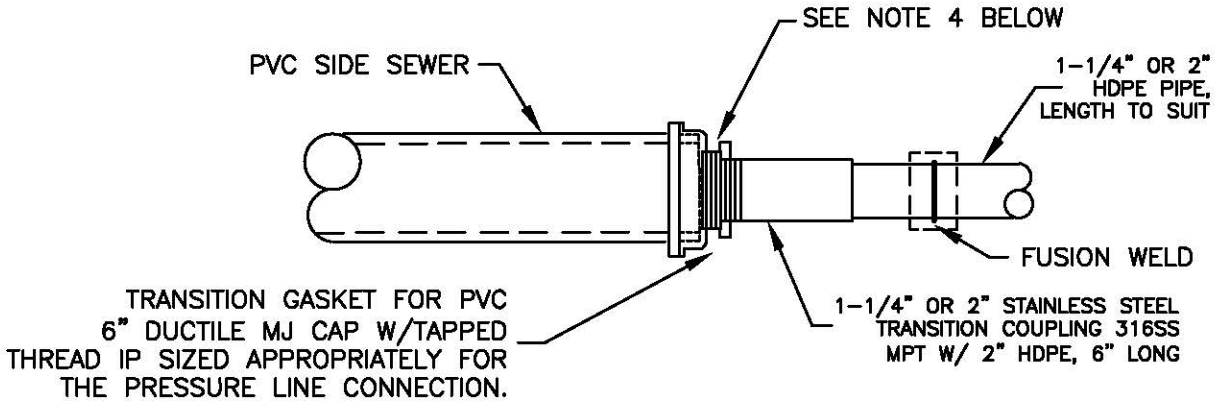

PRESSURE LINE CONNECTION

NOT TO SCALE

NOTES

1. ALL PVC FITTINGS SHALL BE GASKETED.
2. NO COLLECTION VALVE BOX REQUIRED.
3. CAP MAY BE BURIED 18" BELOW GRADE WITH PVC CAP, IF NOT PLACED UNDER HARD SURFACES.
4. FOR 1-1/4" SERVICE USE 2"x1-1/4" BRASS BUSHING FOR 2" TAP.
5. FOR 2" SERVICE, OMIT BUSHING.

CITY OF KIRKLAND	
PLAN NO. CK-S.28A	
CITY OF KIRKLAND WASHINGTON	SHALLOW FORCE MAIN CONNECTION

LAST REVISED: 11/30/99

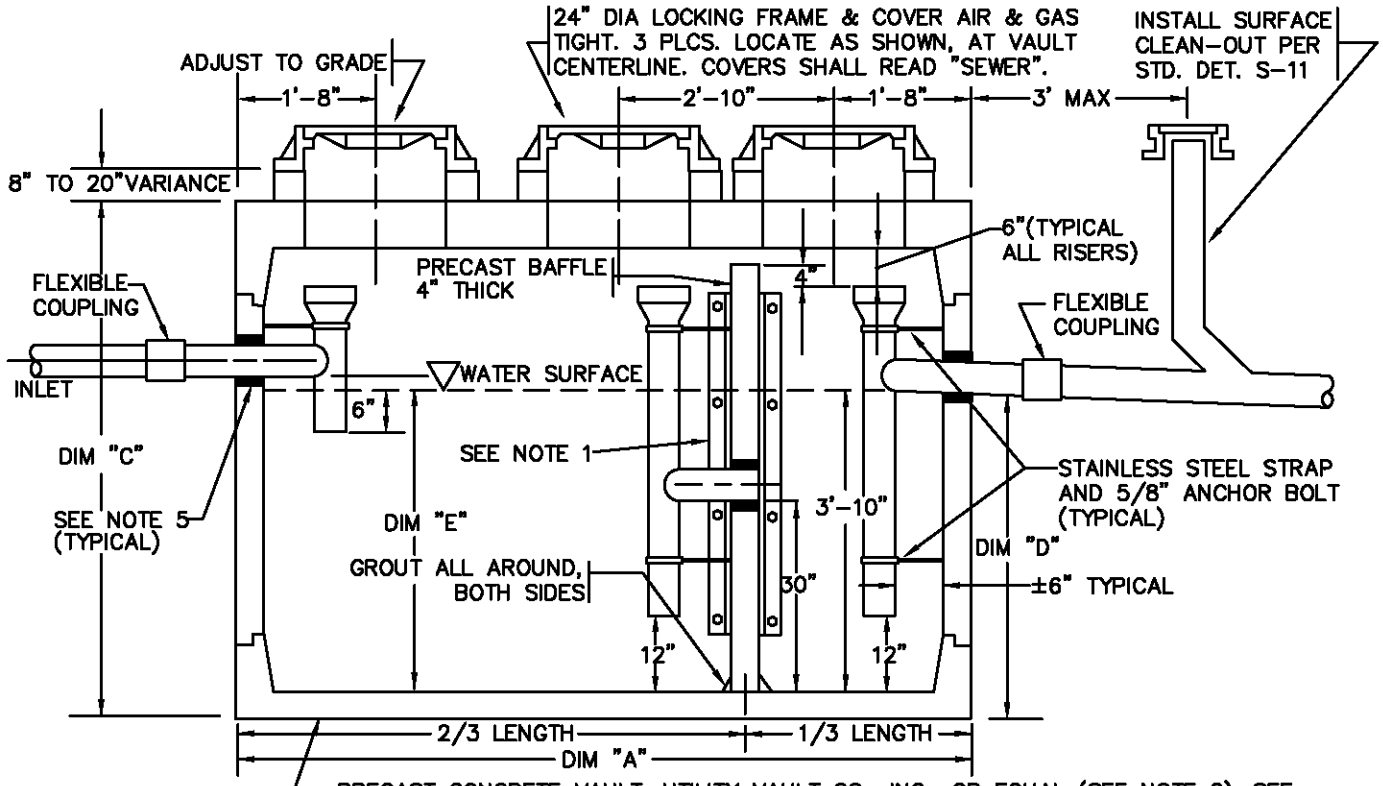

PRECAST CONCRETE VAULT, UTILITY VAULT CO., INC., OR EQUAL (SEE NOTE 2). SEE CHART BELOW FOR DIMENSIONS REQUIRED FOR EACH GALLON CAPACITY, VAULT OUTSIDE WIDTH IS DIMENSION "B".

NOTES:

1. IF VAULT IS NOT SLOTTED TO ACCEPT PRECAST CONC. BAFFLE THEN PRECAST CONC. BAFFLE SHALL BE HELD IN PLACE BY (2) 3"x3"x3/8" ANGLE (4FT. LONG) ATTACHED TO VAULT WALL WITH (4 EA.) 1/2" BOLTS AND NUTS (WITH WASHERS) SPACED 14"O.C. ANGLE AND FASTENERS SHALL BE STAINLESS STEEL OR GALVANIZED AND ASPHALT COATED.
2. PRECAST VAULT AND BAFFLE SHALL HAVE KNOCKOUTS AT ALL PIPE OPENINGS. IF KNOCKOUTS ARE NOT PRESENT THEN PIPE OPENINGS SHALL BE CORE-DRILLED. PIPE OPENINGS SHALL BE 2" LARGER THAN PIPE DIAMETER.
3. POSITION RISERS BELOW ACCESS OPENINGS TO ALLOW CLEAR ACCESS TO RISER AND VAULT CHAMBER.
4. LOCATE INTERCEPTOR WITHIN 20' OF DRIVE FOR ACCESS BY MAINT. VEHICLE.
5. CONNECTIONS TO CONCRETE WALLS WITH P.V.C. PIPE REQUIRE KOR-N-SEAL CONNECTOR. SEAL ALL PIPE CONNECTIONS WITH NONSHRINK GROUT.
6. LINE-SIZED P.V.C. PIPE SHALL BE USED THROUGHOUT WHERE LINE IS 6"DIA. OR GREATER. SIX INCH P.V.C. SHALL BE USED THROUGHOUT WHERE LINE IS LESS THAN 6"DIA.
7. GRAY-WATER ONLY. BLACK-WATER SHALL BE CARRIED BY SEPARATE SIDE SEWER.
8. CLEAN-OUT REQUIRED 3' MAX. DOWNSTREAM OF INTERCEPTOR.
9. FILL WITH CLEAN WATER PRIOR TO START UP OF SYSTEM.
10. FOR CAPACITIES LESS THAN 1500 GALLONS, SUBSTITUTE 12" DIA. CAST IRON COVER AND FRAME FOR "CENTER" MANHOLE. LOCATE DIRECTLY ABOVE TEE. OLYMPIC FOUNDRY 5931 OR EQUAL.

GALLON CAPACITY		600	750	1000	1500	2000	2500	3000	4000	5000	6000
UV CO. MODEL No.		577-GA	577-GA	4484-GA	5106-GA	612-GA	612-GA	814-GA	814-GA	818-GA	818-GA
LENGTH	DIM "A"	7'-0"	7'-0"	9'-0"	11'-2"	12'-8"	12'-8"	15'-7"	15'-7"	19'-11"	19'-11"
WIDTH	DIM "B"	4'-8"	4'-8"	5'-0"	5'-8"	6'-8"	6'-8"	9'-7"	9'-7"	9'-11"	9'-11"
HEIGHT	DIM "C"	7'-0"	7'-0"	7'-2"	7'-2"	8'-0"	8'-0"	8'-6 1/2"	8'-6 1/2"	8'-11"	10'-5"
	DIM "D"	3'-6"	4'-3"	4'-2"	4'-4"	4'-7"	5'-6"	5'-0"	6'-3"	6'-2"	7'-2"
WATER DEPTH	DIM "E"	3'-2"	3'-11"	3'-10"	4'-0"	3'-10"	4'-9"	3'-9"	5'-0"	4'-9"	5'-9"

CITY OF KIRKLAND

PLAN NO. CK-S.29

CITY OF KIRKLAND WASHINGTON

GREASE INTERCEPTOR

APPENDIX G

SewerCAD Results

THIS PAGE INTENTIONALLY LEFT BLANK

Existing - Peak Hour Flow - Pipe Capacity Table

Label	Upstream Node	Upstream Invert Elevation (ft)	Downstream Node	Downstream Invert Elevation (ft)	Length (ft)	Slope (%)	Diameter (in)	Material	Manning's n	Design Capacity (gpm)	Domestic Flow (gpm)	I/I Flow (gpm)	Total Flow (gpm)	Percent Full (%)	CIP No.	Notes
Basin 3	Kirkland_Manholes-3128	323.94	Kirkland_Manholes-3129	308.71	343.2	4.44	8	PVC	0.01	1,485	0	8	8	0.6		
CO-1	Kirkland_Manholes-293	22.09	Kirkland_Manholes-310	21.69	516.5	0.08	12	Concrete	0.013	445	1	18	18	4.2	SM14-Ex-EX37	
CO-2	Kirkland_Manholes-310	21.69	Kirkland_Manholes-311	21.29	254.7	0.16	12	Concrete	0.013	634	3	27	30	4.7	SM14-Ex-EX37	
CO-6	Kirkland_Manholes-1496	491.57	Kirkland_Manholes-1461	483.24	408.5	2.04	8	PVC	0.01	1,007	0	4	4	0.4		
CO-8	Kirkland_Manholes-1271	222.62	Kirkland_Manholes-1272	197.83	531.9	4.66	8	PVC	0.01	1,522	0	8	8	0.6		
CO-9	Kirkland_Manholes-1272	197.83	Kirkland_Manholes-1273	182.86	225.5	6.64	8	PVC	0.01	1,817	3	16	20	1.1		
CO-11	Kirkland_Manholes-3102	53.77	Kirkland_Manholes-2664	53.2	380.4	0.15	12	Concrete	0.013	619	121	401	522	84.3	SM14-Ex-EX222	
CO-13	Kirkland_Manholes-2664	53.2	Kirkland_Manholes-2204	53	65.8	0.3	12	Concrete	0.013	881	121	407	528	59.9	SM14-Ex-EX222	
CO-14	Kirkland_Manholes-2204	53	Kirkland_Manholes-3101	52.44	123.2	0.45	12	Concrete	0.013	1,078	124	425	549	50.9	SM14-Ex-EX222	
CO-15	Kirkland_Manholes-978	222.9	Kirkland_Manholes-979	219.9	335.8	0.89	8	PVC	0.01	666	8	51	59	8.8		
CO-17	Kirkland_Manholes-979	219.9	MH-327	219.64	97.4	0.27	8	PVC	0.01	364	8	55	63	17.4		
CO-18	MH-327	219.64	Kirkland_Manholes-980	219.4	90.3	0.27	8	PVC	0.01	364	12	64	76	20.8		
CO-19	Kirkland_Manholes-1011	226.35	MH-327	219.64	167.6	4	8	PVC	0.01	1,411	4	4	8	0.6		
CO-20	Kirkland_Manholes-1907	380.32	Kirkland_Manholes-1909	380	67.5	0.47	8	PVC	0.01	485	17	12	29	6		
CO-21	Kirkland_Manholes-1909	380	Kirkland_Manholes-1366	377.95	352.1	0.58	8	PVC	0.01	538	43	75	118	22		
CO-22	Kirkland_Manholes-638	236.51	Kirkland_Manholes-637	235.38	223.4	0.51	21	PVC	0.01	6,576	454	1,534	1,987	30.2		
CO-23	Kirkland_Manholes-637	235.38	Kirkland_Manholes-633	234.78	246.2	0.24	21	PVC	0.01	4,564	458	1,538	1,995	43.7		
CO-25	Kirkland_Manholes-2644	74.88	Kirkland_Manholes-2655	44.22	203.4	15.07	8	PVC	0.01	2,737	12	73	85	3.1		
CO-26	Kirkland_Manholes-2642	102.55	MH-328	82.65	111.2	17.89	8	PVC	0.01	2,982	1	12	13	0.5		
CO-27	MH-328	82.65	Kirkland_Manholes-2644	74.88	76.8	10.12	8	PVC	0.01	2,242	4	30	35	1.5		
CO-28	Kirkland_Manholes-3144	94.3	Kirkland_Manholes-3143	93.65	162.7	0.4	6	PVC	0.01	207	2	6	9	4.1	SM14-Ex-EX293	
CO-29	Kirkland_Manholes-3143	93.65	MH-328	82.65	108.8	10.11	6	PVC	0.01	1,041	3	12	15	1.5	SM14-Ex-EX293	
CO-30	Kirkland_Manholes-2662	11.52	Kirkland_Manholes-2661	11.28	48.5	0.49	18	Concrete	0.013	3,316	229	601	830	25	SM14-Ex-EX289	
CO-31	Kirkland_Manholes-2661	11.28	Kirkland_Manholes-2851	10.8	93.8	0.51	18	Concrete	0.013	3,373	254	777	1,031	30.6	SM14-Ex-EX289	
CO-32	Kirkland_Manholes-3203	49.55	Kirkland_Manholes-2660	26.87	244.8	9.27	8	PVC	0.01	2,146	6	36	42	2		
CO-33	Kirkland_Manholes-2660	26.87	Kirkland_Manholes-2661	11.28	44	35.46	8	PVC	0.01	4,198	25	170	195	4.6		
CO-34	Kirkland_Manholes-2221	60.29	Kirkland_Manholes-2225	40.46	244.8	8.1	8	PVC	0.01	2,007	11	52	63	3.1		
CO-35	Kirkland_Manholes-2225	40.46	Kirkland_Manholes-2228	25	165.9	9.32	8	PVC	0.01	2,152	18	71	89	4.2		Drop Connection
CO-36	Kirkland_Manholes-2081	95.66	Kirkland_Manholes-2218	82.71	188.1	6.88	8	PVC	0.01	1,850	1	6	7	0.4		
CO-37	Kirkland_Manholes-2218	82.71	Kirkland_Manholes-2221	60.29	246.5	9.1	8	PVC	0.01	2,126	7	26	33	1.6		
CO-38	Kirkland_Manholes-2227	45.3	Kirkland_Manholes-2226	43.3	93.8	2.13	8	PVC	0.01	1,029	2	6	9	0.8		
CO-39	Kirkland_Manholes-2226	43.3	Kirkland_Manholes-2225	40.46	248.3	1.14	8	PVC	0.01	754	6	13	19	2.5		
CO-41	Kirkland_Manholes-1046	162.86	Kirkland_Manholes-3175	156.47	218.7	2.92	8	PVC	0.01	1,205	74	277	352	29.2		
CO-42	Kirkland_Manholes-1043	180.32	Kirkland_Manholes-3126	177.5	189.3	1.49	8	PVC	0.01	861	26	98	124	14.4		
CO-43	Kirkland_Manholes-3126	177.5	Kirkland_Manholes-1046	162.86	197.5	7.41	8	PVC	0.01	1,920	28	111	139	7.2		
CO-44	Kirkland_Manholes-61	205.17	Kirkland_Manholes-64	204.5	110.3	0.61	8	Concrete	0.013	423	8	30	38	8.9	SM14-Ex-EX6	
CO-45	Kirkland_Manholes-64	204.5	Kirkland_Manholes-65	199.61	323.5	1.51	8	Concrete	0.013	667	10	34	44	6.6	SM14-Ex-EX6	
CO-47	Kirkland_Manholes-2410	409.57	Kirkland_Manholes-2408	405.44	108.3	3.82	8	PVC	0.01	1,377	0	4	4	0.3		
CO-48	Kirkland_Manholes-2135	110	Kirkland_Manholes-2156	109.44	35	1.6	8	PVC	0.01	892	8	32	40	4.5		
CO-49	Kirkland_Manholes-2156	109.44	Kirkland_Manholes-2157	100.18	171	5.42	8	PVC	0.01	1,641	8	39	47	2.9		
CO-50	Kirkland_Manholes-2190	132.39	Kirkland_Manholes-2189	112.21	288.2	7	8	PVC	0.01	1,866	6	25	30	1.6		
CO-51	Kirkland_Manholes-2189	112.21	Kirkland_Manholes-2186	104.5	321.1	2.4	8	PVC	0.01	1,092	11	33	44	4		
CO-52	Kirkland_Manholes-2169	142.85	Kirkland_Manholes-2168	127.32	219.5	7.07	6	Concrete	0.013	670	1	16	18	2.6	SM14-Ex-EX193	
CO-53	Kirkland_Manholes-2168	127.32	Kirkland_Manholes-2167	120.69	65.4	10.14	6	Concrete	0.013	802	2	25	27	3.4	SM14-Ex-EX193	
CO-54	Kirkland_Manholes-2165	94.99	Kirkland_Manholes-2164	90.37	91.4	5.05	8	PVC	0.01	1,585	8	49	57	3.6		
CO-55	Kirkland_Manholes-2164	90.37	Kirkland_Manholes-2140	88.47	43.9	4.33	8	PVC	0.01	1,468	8	58	66	4.5		
CO-56	Kirkland_Manholes-1703	58	Kirkland_Manholes-1704	54.53	111.1	3.12	6	Concrete	0.013	445	5	16	22	4.8	SM14-Ex-EX153	
CO-57	Kirkland_Manholes-1704	54.53	Kirkland_Manholes-1705	33.28	211.8	10.03	6	Concrete	0.013	798	5	25	30	3.7	SM14-Ex-EX153	
CO-58	Kirkland_Manholes-1810	85.96	Kirkland_Manholes-1808	66.8	280.2	6.84	8	Concrete	0.013	1,418	65	286	351	24.8	SM4	
CO-59	Kirkland_Manholes-1808	66.8	Kirkland_Manholes-1807	44.26	183.9	12.26	8	Concrete	0.013	1,899	66	294	360	19	SM4	
CO-60	Kirkland_Manholes-1718	72.96	Kirkland_Manholes-1717	58.55	301.8	4.77	8	Concrete	0.013	1,185	1	8	9	0.8	SM14-Ex-EX165	
CO-61	Kirkland_Manholes-1717	58.55	Kirkland_Manholes-1719	46.02	243.6	5.14	8	Concrete	0.013	1,230	26	49	75	6.1	SM14-Ex-EX165	
CO-62	Kirkland_Manholes-1605	146.86	Kirkland_Manholes-1606	138.24	64.3	13.41	6	PVC	0.01	1,199	0	8	8	0.7	SM14-Ex-EX120	
CO-63	Kirkland_Manholes-1606	138.24	Kirkland_Manholes-1604	117.22	209.3	10.04	6	PVC	0.01	1,038	0	16	16	1.6	SM14-Ex-EX120	
CO-64	Kirkland_Manholes-3029	503.06	Kirkland_Manholes-1462	498.98	186.9	2.18	8	Concrete	0.013	801	1	4	5	0.7	SM14-Ex-EX273	
CO-66	Kirkland_Manholes-1468	502.5	Kirkland_Manholes-1462	498.98	381.4	0.92	8	Concrete	0.013	521	2	4	6	1.2	SM14-Ex-EX271	
CO-67	Kirkland_Manholes-1462	498.98	Kirkland_Manholes-1463	498.43	46.4	1.18	8	Concrete	0.013	590	4	12	16	2.8	SM14-Ex-EX271	
CO-69	Kirkland_Manholes-1251	198.9	Kirkland_Manholes-1252	181.71	334.6	5.14	8	Concrete	0.013	1,229	29	156	185	15.1	SM14-Ex-EX101	
CO-70	Kirkland_Manholes-1250	210.15	Kirkland_Manholes-1251	198.9	400	2.81	8	Concrete	0.013	910	22	140	162	17.8	SM14-Ex-EX101	
CO-71	Kirkland_Manholes-1310	231.57	Kirkland_Manholes-1251	198.9	267.1	12.23	8	Concrete	0.013	1,897	3	8	11	0.6	SM14-Ex-EX99	
CO-72	Kirkland_Manholes-230	172.81	Kirkland_Manholes-228	142.32	167.5	18.2	8	PVC	0.01	3,008	42	119	161	5.4		
CO-73	Kirkland_Manholes-3115	187.58	Kirkland_Manholes-228	142.32	414	10.93	8	PVC	0.01	2,331	2	4	7	0.3		

Existing - Peak Hour Flow - Pipe Capacity Table

Label	Upstream Node	Upstream Invert Elevation (ft)	Downstream Node	Downstream Invert Elevation (ft)	Length (ft)	Slope (%)	Diameter (in)	Material	Manning's n	Design Capacity (gpm)	Domestic Flow (gpm)	I/I Flow (gpm)	Total Flow (gpm)	Percent Full (%)	CIP No.	Notes
CO-74	Kirkland_Manholes-1287	140.18	Kirkland_Manholes-1288	139.29	58.2	1.53	6	Concrete	0.013	311	29	165	194	62.1	SM14-Ex-EX105	
CO-75	Kirkland_Manholes-1288	139.29	Kirkland_Manholes-1289	131.61	344.5	2.23	6	Concrete	0.013	376	32	173	205	54.6	SM14-Ex-EX105	
CO-77	Kirkland_Manholes-1255	163.1	Kirkland_Manholes-1256	151.53	106.9	10.82	8	Concrete	0.013	1,784	4	33	37	2.1	SM14-Ex-EX104	
CO-78	Kirkland_Manholes-1253	189.17	MH-329	183.73	57.5	9.46	8	Concrete	0.013	1,668	1	8	9	0.6	SM14-Ex-EX104	
CO-80	Kirkland_Manholes-1254	186	MH-329	183.73	30.2	7.52	8	Concrete	0.013	1,488	2	8	10	0.7	SM14-Ex-EX104	
CO-81	MH-329	183.73	Kirkland_Manholes-1255	163.1	274.1	7.53	8	Concrete	0.013	1,488	3	25	28	1.9	SM14-Ex-EX104	
CO-83	Kirkland_Manholes-279	76.14	Kirkland_Manholes-278	56.62	239.7	8.14	8	Concrete	0.013	1,548	28	6	35	2.2	SM10	
CO-84	Kirkland_Manholes-271	91.78	Kirkland_Manholes-272	84	313.5	2.48	8	Concrete	0.013	854	48	130	178	20.8	SM10	If flow exceeds capacity, overflow MH will be activated; model appropriately.
CO-85	Kirkland_Manholes-272	84	Kirkland_Manholes-273	69.52	161.1	8.99	8	Concrete	0.013	1,626	50	134	184	11.3	SM10	
CO-89	Kirkland_Manholes-1221	265	Kirkland_Manholes-1210	257.02	313.6	2.54	6	Concrete	0.013	402	4	14	19	4.6	SM14-Ex-EX90	
CO-90	Kirkland_Manholes-1208	237.71	Kirkland_Manholes-1207	214.35	271	8.62	6	Concrete	0.013	739	12	39	51	6.9	SM14-Ex-EX90	
CO-91	Kirkland_Manholes-1207	214.35	Kirkland_Manholes-1206	193.92	362.6	5.63	6	Concrete	0.013	598	15	47	62	10.4	SM14-Ex-EX90	
CO-92	Kirkland_Manholes-1142	218.06	Kirkland_Manholes-1146	215.3	316.4	0.87	6	Concrete	0.013	235	8	33	41	17.6	SM4	
CO-93	Kirkland_Manholes-1223	241.1	Kirkland_Manholes-1146	215.3	349.8	7.38	6	Concrete	0.013	684	3	8	11	1.6	SM14-Ex-EX86	
CO-94	Kirkland_Manholes-1199	190.02	Kirkland_Manholes-1198	189.72	153.8	0.19	8	Concrete	0.013	239	8	8	17	7	SM14-Ex-EX80	
CO-95	Kirkland_Manholes-1141	204.1	Kirkland_Manholes-1198	189.72	107.3	13.4	8	Concrete	0.013	1,985	5	33	37	1.9	SM14-Ex-EX80	
CO-96	Kirkland_Manholes-3104	114.41	Kirkland_Manholes-3103	113.84	31.2	1.83	8	PVC	0.01	953	15	107	122	12.9	SM10	
CO-97	Kirkland_Manholes-517	138.64	Kirkland_Manholes-3103	113.84	358.5	6.92	8	PVC	0.01	1,854	1	8	9	0.5	SM10	
CO-98	Kirkland_Manholes-3196	122.5	Kirkland_Manholes-503	118	198.4	2.27	6	Concrete	0.013	379	3	16	19	5.1	SM10	
CO-100	Kirkland_Manholes-503	118	Kirkland_Manholes-504	108.24	276.3	3.53	6	Concrete	0.013	473	4	25	28	6	SM14-Ex-EX78	
CO-101	Kirkland_Manholes-504	108.24	Kirkland_Manholes-510	78.8	269.3	10.93	6	Concrete	0.013	833	5	33	38	4.5	SM14-Ex-EX78	
CO-102	Kirkland_Manholes-2573	298.95	Kirkland_Manholes-2572	298.88	17.9	0.4	8	PVC	0.01	446	2	16	18	4.1		
CO-103	Kirkland_Manholes-2959	355.76	Kirkland_Manholes-2572	298.88	327.6	17.36	8	PVC	0.01	2,938	1	4	5	0.2		
CO-104	Kirkland_Manholes-2783	269.77	Kirkland_Manholes-2784	262.56	166.7	4.32	8	PVC	0.01	1,466	6	40	45	3.1		
CO-105	Kirkland_Manholes-2578	278.46	Kirkland_Manholes-2783	269.77	170.6	5.09	8	PVC	0.01	1,591	5	36	41	2.6		
CO-106	Kirkland_Manholes-2921	73.76	Kirkland_Manholes-2920	63.77	70.3	14.2	8	PVC	0.01	2,657	2	17	19	0.7		
CO-107	Kirkland_Manholes-2920	63.77	Kirkland_Manholes-177	35.5	126.7	22.31	8		0.012	2,775	3	21	24	0.9		
CO-109	Kirkland_Manholes-2881	265.95	Kirkland_Manholes-1221	265	237.1	0.4	6	Concrete	0.013	159	2	6	8	5.1	SM14-Ex-EX90	
CO-110	Kirkland_Manholes-2686	221.84	Kirkland_Manholes-2690	217.58	240.3	1.77	8	Concrete	0.013	722	10	32	42	5.8	SM14-Ex-EX201	
CO-111	Kirkland_Manholes-2690	217.58	Kirkland_Manholes-2691	211.09	233.1	2.78	8	Concrete	0.013	905	11	36	47	5.2	SM14-Ex-EX201	
CO-112	Kirkland_Manholes-2612	250.12	Kirkland_Manholes-2613	203.91	357.8	12.91	8	Concrete	0.013	1,949	4	8	12	0.6	SM14-Ex-EX297	
CO-113	Kirkland_Manholes-2613	203.91	Kirkland_Manholes-3164	171.21	256.4	12.76	8	Concrete	0.013	1,937	6	12	18	0.9	SM14-Ex-EX297	
CO-114	Kirkland_Manholes-488	256.69	Kirkland_Manholes-489	206.41	218.5	23.01	8	PVC	0.01	3,382	1	4	5	0.2		
CO-115	Kirkland_Manholes-834	245.56	Kirkland_Manholes-489	206.41	278.5	14.06	8	PVC	0.01	2,644	2	4	6	0.2		
CO-116	Kirkland_Manholes-599	92.8	Kirkland_Manholes-600	91.95	330.6	0.26	6	Concrete	0.013	128	1	16	18	13.8	SM14-Ex-EX160	
CO-120	Kirkland_Manholes-601	92.05	Kirkland_Manholes-602	90.22	280.5	0.65	6	Concrete	0.013	203	10	16	27	13.1	SM14-Ex-EX160	
CO-123	Kirkland_Manholes-603	94.89	Kirkland_Manholes-604	92.41	322.7	0.77	6	Concrete	0.013	221	2	4	6	2.8	SM14-Ex-EX160	
CO-124	Kirkland_Manholes-594	105.16	Kirkland_Manholes-595	103.44	177	0.97	12	Concrete	0.013	1,576	1	8	9	0.6	SM14-Ex-EX116	
CO-125	MH-321	218.02	MH-322	217.7	80.6	0.4	8	PVC	0.01	446	1	4	5	1.2		
CO-126	MH-322	217.7	Kirkland_Manholes-2446	217.36	85	0.4	8	PVC	0.01	446	2	8	10	2.3		
CO-127	MH-315	235.18	MH-316	235.06	29.4	0.41	6	Concrete	0.013	161	1	4	5	2.9		
CO-128	MH-316	235.06	Kirkland_Manholes-2602	234.19	216.7	0.4	6	Concrete	0.013	159	1	8	9	5.9	SM14-Ex-EX300	
CO-130	MH-330	93.13	Kirkland_Manholes-601	92.05	270.2	0.4	6	Concrete	0.013	159	0	8	9	5.4	SM14-Ex-EX160	
CO-133	Kirkland_Manholes-2269	398.2	Kirkland_Manholes-2266	392.8	346.8	1.56	8	Concrete	0.013	677	19	103	122	18.1	SM14-Ex-EX261	
CO-139	Kirkland_Manholes-2703	250.19	MH-333	250.73	32.9	1.64	8	PVC	0.01	904	2	12	14	1.6		
CO-140	MH-333	250.73	MH-334	252.1	150.3	0.91	8	PVC	0.01	673	1	8	9	1.4		
CO-141	MH-334	252.1	MH-335	253.55	221.6	0.65	8	PVC	0.01	570	1	4	5	0.8		
CO-142	Kirkland_Manholes-2881	265.95	Kirkland_Manholes-1214	261.31	224.5	2.07	6	Concrete	0.013	362	2	6	8	2.3	SM14-Ex-EX90	
CO-143	Kirkland_Manholes-2593	284.96	Kirkland_Manholes-2604	283.17	324.7	0.55	8	Concrete	0.013	403	24	91	0	0	SM14-Ex-EX299	
CO-148	Kirkland_Manholes-603	94.89	Kirkland_Manholes-602	90.22	228.3	2.05	8	Concrete	0.013	776	2	4	6	0.8	SM14-Ex-EX160	
CO-149	MH-336	98.65	Kirkland_Manholes-276	92.16	227.3	2.86	8	Concrete	0.013	916	0	3	3	0.3	SM10	
CO-150	MH-337	92.45	Kirkland_Manholes-279	76.14	213.9	7.63	8	Concrete	0.013	1,498	0	3	3	0.2	SM10	
CO-151	MH-338	119.57	Kirkland_Manholes-308	114.39	316.2	1.64	8	Concrete	0.013	694	0	9	9	1.3	SM10	
CO-152	MH-339	159.67	Kirkland_Manholes-524	157.52	274.1	0.78	8	Concrete	0.013	480	0	8	8	1.7	SM10	
CO-154	MH_Selection_06-13-2016-11	20.6	O-26	20.25	45	0.78	48	Concrete	0.013	56,862	1,146	4,222	6,953	12.2		Updated per as-built drawings
KC_Main-2	KC_Manholes-18	10.29	KC_Manholes-19	10.24	10.1	0.5	15	Concrete	0.013	2,043	734	2,048	2,854	139.7	SM14-Ex-EX289	
KC_Main-28	KC_Manholes-19	10.24	O-6	10	47.9	0.5	15	Concrete	0.013	2,052	782	2,054	2,908	141.7	SM14-Ex-EX289	
Kirkland_Main-1	Kirkland_Manholes-2	142.59	Kirkland_Manholes-3	141.09	316.3	0.47	8	PVC	0.01	486	0	1	1	0.3		
Kirkland_Main-2	Kirkland_Manholes-4	139.47	Kirkland_Manholes-5	138.65	146.8	0.56	8	PVC	0.01	527	14	4	19	3.5		
Kirkland_Main-3	Kirkland_Manholes-3	141.09	Kirkland_Manholes-4	139.47	325.9	0.5	8	PVC	0.01	497	14	3	17	3.4		
Kirkland_Main-4	Kirkland_Manholes-6	127.8	Kirkland_Manholes-7	127.07	145	0.5	8	PVC	0.01	500	15	7	23	4.5		

Existing - Peak Hour Flow - Pipe Capacity Table

Label	Upstream Node	Upstream Invert Elevation (ft)	Downstream Node	Downstream Invert Elevation (ft)	Length (ft)	Slope (%)	Diameter (in)	Material	Manning's n	Design Capacity (gpm)	Domestic Flow (gpm)	I/I Flow (gpm)	Total Flow (gpm)	Percent Full (%)	CIP No.	Notes
Kirkland_Main-5	Kirkland_Manholes-5	138.65	Kirkland_Manholes-6	127.8	166.2	6.53	8	PVC	0.01	1,801	15	6	21	1.1		
Kirkland_Main-6	Kirkland_Manholes-8	108.29	Kirkland_Manholes-9	99.39	204.3	4.36	8	PVC	0.01	1,471	16	12	28	1.9		
Kirkland_Main-7	Kirkland_Manholes-7	127.07	Kirkland_Manholes-8	108.29	154	12.2	8	PVC	0.01	2,462	16	10	27	1.1		
Kirkland_Main-8	Kirkland_Manholes-9	99.39	Kirkland_Manholes-99	74.09	252.3	10.03	8	PVC	0.01	2,233	58	13	71	3.2		
Kirkland_Main-10	Kirkland_Manholes-10	249.23	Kirkland_Manholes-11	247.5	365.2	0.47	8	PVC	0.01	485	1	4	4	0.9		
Kirkland_Main-11	Kirkland_Manholes-11	247.5	Kirkland_Manholes-12	246.57	355.7	0.26	8	PVC	0.01	360	2	8	10	2.8		
Kirkland_Main-12	Kirkland_Manholes-12	246.57	Kirkland_Manholes-650	246.28	73.5	0.4	8	PVC	0.01	446	2	12	14	3.1		
Kirkland_Main-13	Kirkland_Manholes-13	266.08	Kirkland_Manholes-917	265.16	206.5	0.45	8	PVC	0.01	471	0	4	4	0.9		
Kirkland_Main-14	Kirkland_Manholes-14	260.99	Kirkland_Manholes-15	248.41	274.7	4.58	8	PVC	0.01	1,509	1	4	5	0.3		
Kirkland_Main-15	Kirkland_Manholes-16	249.63	Kirkland_Manholes-15	248.41	56	2.18	8	PVC	0.01	1,041	16	75	91	8.8		
Kirkland_Main-16	Kirkland_Manholes-17	247.29	Kirkland_Manholes-650	246.28	284.1	0.36	8	PVC	0.01	420	19	87	107	25.3		
Kirkland_Main-17	Kirkland_Manholes-3034	97.65	Kirkland_Manholes-3033	93.75	20	19.51	8	PVC	0.01	3,114	0	4	5	0.1		
Kirkland_Main-18	Kirkland_Manholes-3033	93.75	Kirkland_Manholes-3032	86.58	55.1	13.01	8	PVC	0.01	2,543	0	9	9	0.3		
Kirkland_Main-19	Kirkland_Manholes-3032	86.58	Kirkland_Manholes-22	82.71	39.7	9.76	8	PVC	0.01	2,202	0	13	13	0.6		
Kirkland_Main-20	Kirkland_Manholes-22	82.71	Kirkland_Manholes-1	73.25	125.9	7.51	8	PVC	0.01	1,932	1	17	18	0.9		
Kirkland_Main-21	Kirkland_Manholes-15	248.41	Kirkland_Manholes-17	247.29	382.5	0.29	8	PVC	0.01	382	17	83	100	26.3		
Kirkland_Main-22	Kirkland_Manholes-18	254.35	Kirkland_Manholes-16	249.63	106.2	4.45	8	PVC	0.01	1,487	15	72	86	5.8		
Kirkland_Main-23	Kirkland_Manholes-19	254.88	Kirkland_Manholes-18	254.35	102.4	0.52	8	PVC	0.01	507	14	68	81	16		
Kirkland_Main-24	Kirkland_Manholes-23	269.98	Kirkland_Manholes-19	254.88	324.5	4.65	8	PVC	0.01	1,521	1	4	5	0.3		
Kirkland_Main-25	Kirkland_Manholes-622	255	Kirkland_Manholes-19	254.88	84.5	0.14	8	PVC	0.01	266	12	60	72	26.9		
Kirkland_Main-26	Kirkland_Manholes-624	257.73	Kirkland_Manholes-623	256.4	95.1	1.4	8	PVC	0.01	834	1	4	5	0.5		
Kirkland_Main-27	Kirkland_Manholes-623	256.4	Kirkland_Manholes-622	255	306.3	0.46	8	PVC	0.01	477	2	8	10	2		
Kirkland_Main-28	Kirkland_Manholes-625	258	Kirkland_Manholes-622	255	179.1	1.67	8	PVC	0.01	912	10	48	57	6.3		
Kirkland_Main-29	Kirkland_Manholes-28	182.96	Kirkland_Manholes-29	182.79	41.4	0.4	8	PVC	0.01	446	4	4	8	1.8		
Kirkland_Main-30	Kirkland_Manholes-29	182.79	Kirkland_Manholes-25	175.02	121.6	6.39	8	PVC	0.01	1,783	16	43	59	3.3		
Kirkland_Main-31	Kirkland_Manholes-36	251.25	Kirkland_Manholes-35	222.04	280.7	10.41	8	PVC	0.01	2,275	2	4	6	0.3		
Kirkland_Main-32	Kirkland_Manholes-35	222.04	Kirkland_Manholes-34	221.71	82.5	0.4	8	PVC	0.01	446	3	9	12	2.6		
Kirkland_Main-33	Kirkland_Manholes-34	221.71	Kirkland_Manholes-32	220.36	300.4	0.45	8	PVC	0.01	473	5	13	18	3.7		
Kirkland_Main-34	Kirkland_Manholes-32	220.36	Kirkland_Manholes-33	219.84	21.3	2.44	8	PVC	0.01	1,102	6	17	23	2.1		
Kirkland_Main-35	Kirkland_Manholes-33	219.84	Kirkland_Manholes-31	218.88	40.1	2.39	8	PVC	0.01	1,091	6	21	28	2.5		
Kirkland_Main-36	Kirkland_Manholes-37	238.46	Kirkland_Manholes-31	218.88	419.9	4.66	8	PVC	0.01	1,523	2	4	6	0.4		
Kirkland_Main-37	Kirkland_Manholes-31	218.88	Kirkland_Manholes-30	193.77	330.5	7.6	8	PVC	0.01	1,943	9	30	39	2		
Kirkland_Main-38	Kirkland_Manholes-30	193.77	Kirkland_Manholes-29	182.79	147.1	7.46	8	PVC	0.01	1,926	12	34	46	2.4		
Kirkland_Main-39	Kirkland_Manholes-40	185.88	Kirkland_Manholes-41	184.86	116.1	0.88	8	PVC	0.01	661	0	9	9	1.3		
Kirkland_Main-40	Kirkland_Manholes-41	184.86	Kirkland_Manholes-38	173.18	108.4	10.78	8	PVC	0.01	2,314	1	13	14	0.6		
Kirkland_Main-41	Kirkland_Manholes-39	193.85	Kirkland_Manholes-40	185.88	407	1.96	8	PVC	0.01	987	0	4	4	0.4		
Kirkland_Main-42	Kirkland_Manholes-54	66.84	Kirkland_Manholes-103	59.75	133.4	5.31	8	Concrete	0.013	1,250	35	154	189	15.1	SM14-Ex-EX13	
Kirkland_Main-43	Kirkland_Manholes-47	192.83	Kirkland_Manholes-48	169.78	343.8	6.71	8	Concrete	0.013	1,404	1	4	6	0.4	SM14-Ex-EX13	
Kirkland_Main-44	Kirkland_Manholes-48	169.78	Kirkland_Manholes-49	164.6	338.4	1.53	8	Concrete	0.013	671	3	9	12	1.7	SM14-Ex-EX13	
Kirkland_Main-45	Kirkland_Manholes-49	164.6	Kirkland_Manholes-50	161.4	179.7	1.78	8	Concrete	0.013	724	22	111	133	18.4	SM14-Ex-EX13	
Kirkland_Main-46	Kirkland_Manholes-50	161.4	Kirkland_Manholes-51	157.39	303.6	1.32	8	Concrete	0.013	623	23	115	139	22.2	SM14-Ex-EX13	
Kirkland_Main-47	Kirkland_Manholes-51	157.39	Kirkland_Manholes-52	124.84	333.7	9.75	8	Concrete	0.013	1,694	25	119	145	8.5	SM14-Ex-EX13	
Kirkland_Main-48	Kirkland_Manholes-59	155.25	Kirkland_Manholes-58	153.05	131	1.68	8	Concrete	0.013	703	1	4	5	0.7	SM14-Ex-EX14	
Kirkland_Main-49	Kirkland_Manholes-58	153.05	Kirkland_Manholes-57	140.82	263.2	4.65	8	Concrete	0.013	1,169	2	9	10	0.9	SM14-Ex-EX14	
Kirkland_Main-50	Kirkland_Manholes-57	140.82	Kirkland_Manholes-56	112.82	272.1	10.29	8	Concrete	0.013	1,740	4	13	17	1	SM14-Ex-EX14	
Kirkland_Main-51	Kirkland_Manholes-56	112.82	Kirkland_Manholes-55	79.92	269.4	12.21	8	Concrete	0.013	1,895	6	17	23	1.2	SM14-Ex-EX14	
Kirkland_Main-52	Kirkland_Manholes-55	79.92	Kirkland_Manholes-54	66.84	152.2	8.59	8	Concrete	0.013	1,590	8	21	29	1.8	SM14-Ex-EX14	
Kirkland_Main-53	Kirkland_Manholes-52	124.84	Kirkland_Manholes-53	83.26	336	12.38	8	Concrete	0.013	1,908	27	124	151	7.9	SM14-Ex-EX13	
Kirkland_Main-54	Kirkland_Manholes-53	83.26	Kirkland_Manholes-54	66.84	148.1	11.08	8	Concrete	0.013	1,806	27	128	155	8.6	SM14-Ex-EX13	
Kirkland_Main-55	Kirkland_Manholes-62	222.28	Kirkland_Manholes-63	216.98	205.6	2.58	8	PVC	0.01	1,132	2	4	6	0.5		
Kirkland_Main-56	Kirkland_Manholes-63	216.98	Kirkland_Manholes-60	215.88	80.7	1.36	8	PVC	0.01	823	2	9	10	1.3		
Kirkland_Main-57	Kirkland_Manholes-60	215.88	Kirkland_Manholes-61	215.72	40.6	0.4	8	PVC	0.01	446	3	13	16	3.5		Drop Connection
Kirkland_Main-58	Kirkland_Manholes-65	199.61	Kirkland_Manholes-66	186.65	326.2	3.97	8	Concrete	0.013	1,081	11	38	49	4.6	SM14-Ex-EX6	
Kirkland_Main-59	Kirkland_Manholes-66	186.65	Kirkland_Manholes-67	185.01	47	3.49	8	Concrete	0.013	1,013	37	102	140	13.8	SM14-Ex-EX17	
Kirkland_Main-61	Kirkland_Manholes-72	160.29	Kirkland_Manholes-70	152.59	265.8	2.9	8	Concrete	0.013	923	2	4	6	0.7	SM14-Ex-EX15	
Kirkland_Main-62	Kirkland_Manholes-985	205.92	Kirkland_Manholes-986	204.38	192.7	0.8	8	Concrete	0.013	485	29	137	165	34.1	SM14-Ex-EX3	
Kirkland_Main-63	Kirkland_Manholes-242	21.02	Kirkland_Manholes-2761	12.79	68	12.1	8	PVC	0.01	2,453	60	265	325	13.2		
Kirkland_Main-64	Kirkland_Manholes-1033	173.21	Kirkland_Manholes-450	130.07	239	18.05	8	PVC	0.01	2,996	4	13	16	0.5		
Kirkland_Main-65	Kirkland_Manholes-71	153	Kirkland_Manholes-70	152.59	153.6	0.27	8	Concrete	0.013	280	1	4	5	1.9	SM14-Ex-EX16	
Kirkland_Main-66	Kirkland_Manholes-69	159.19	Kirkland_Manholes-70	152.59	340.9	1.94	8	Concrete	0.013	755	4	9	12	1.6	SM14-Ex-EX16	
Kirkland_Main-67	Kirkland_Manholes-68	178.61	Kirkland_Manholes-69	159.19	346.1	5.61	8	Concrete	0.013	1,285	2	4	6	0.5	SM14-Ex-EX16	
Kirkland_Main-68	Kirkland_Manholes-73	249.05	Kirkland_Manholes-74	244.74	143	3.01	8	PVC	0.01	1,224	0	4	4	0.4		

Existing - Peak Hour Flow - Pipe Capacity Table

Label	Upstream Node	Upstream Invert Elevation (ft)	Downstream Node	Downstream Invert Elevation (ft)	Length (ft)	Slope (%)	Diameter (in)	Material	Manning's n	Design Capacity (gpm)	Domestic Flow (gpm)	I/I Flow (gpm)	Total Flow (gpm)	Percent Full (%)	CIP No.	Notes
Kirkland_Main-69	Kirkland_Manholes-77	217.04	Kirkland_Manholes-78	207.46	342.9	2.79	8	Concrete	0.013	907	9	21	30	3.3	SM14-Ex-EX7	
Kirkland_Main-70	Kirkland_Manholes-76	225.56	Kirkland_Manholes-77	217.04	294.1	2.9	8	Concrete	0.013	923	5	17	22	2.4	SM14-Ex-EX7	
Kirkland_Main-71	Kirkland_Manholes-75	235.08	Kirkland_Manholes-76	225.56	281.9	3.38	8	Concrete	0.013	997	3	13	16	1.6	SM14-Ex-EX7	
Kirkland_Main-72	Kirkland_Manholes-74	244.74	Kirkland_Manholes-75	235.08	281.2	3.44	8	Concrete	0.013	1,005	2	9	10	1	SM14-Ex-EX7	
Kirkland_Main-75	Kirkland_Manholes-79	197.48	Kirkland_Manholes-66	186.65	235.2	4.6	8	Concrete	0.013	1,164	24	60	84	7.2	SM14-Ex-EX17	
Kirkland_Main-76	Kirkland_Manholes-78	207.46	Kirkland_Manholes-79	197.48	229.3	4.35	8	Concrete	0.013	1,132	23	55	78	6.9	SM14-Ex-EX17	
Kirkland_Main-78	Kirkland_Manholes-46	167.44	Kirkland_Manholes-43	166.66	144	0.54	8	Concrete	0.013	399	0	9	9	2.1	SM14-Ex-EX5	
Kirkland_Main-79	Kirkland_Manholes-43	166.66	Kirkland_Manholes-44	166.02	96.1	0.67	8	Concrete	0.013	443	18	90	108	24.3	SM14-Ex-EX5	
Kirkland_Main-80	Kirkland_Manholes-45	166.8	Kirkland_Manholes-44	166.02	115.5	0.68	8	Concrete	0.013	446	0	4	4	1	SM14-Ex-EX5	
Kirkland_Main-81	Kirkland_Manholes-27	172.24	Kirkland_Manholes-26	167.35	165.4	2.96	8	Concrete	0.013	932	2	21	23	2.5	SM14-Ex-EX5	
Kirkland_Main-82	Kirkland_Manholes-26	167.35	Kirkland_Manholes-43	166.66	133.3	0.52	8	Concrete	0.013	390	18	77	95	24.3	SM14-Ex-EX5	
Kirkland_Main-84	Kirkland_Manholes-38	173.18	Kirkland_Manholes-27	172.24	235.8	0.4	8	Concrete	0.013	343	2	17	19	5.5	SM14-Ex-EX5	
Kirkland_Main-85	Kirkland_Manholes-24	172.7	Kirkland_Manholes-26	167.35	274.1	1.95	8	Concrete	0.013	758	16	51	67	8.9	SM14-Ex-EX5	
Kirkland_Main-86	Kirkland_Manholes-42	173.4	Kirkland_Manholes-46	167.44	195.7	3.04	8	Concrete	0.013	946	0	4	4	0.5	SM14-Ex-EX5	
Kirkland_Main-87	Kirkland_Manholes-25	175.02	Kirkland_Manholes-24	172.7	94.4	2.46	8	Concrete	0.013	850	16	47	63	7.4	SM14-Ex-EX5	
Kirkland_Main-88	Kirkland_Manholes-44	166.02	Kirkland_Manholes-49	164.6	321.6	0.44	8	Concrete	0.013	360	18	98	116	32.3	SM14-Ex-EX5	
Kirkland_Main-90	Kirkland_Manholes-81	88.9	Kirkland_Manholes-143	71.16	340.9	5.2	8	PVC	0.01	1,608	2	4	6	0.4		
Kirkland_Main-91	Kirkland_Manholes-70	152.59	Kirkland_Manholes-82	150.35	263.6	0.85	8	Concrete	0.013	500	7	21	29	5.7	SM14-Ex-EX15	
Kirkland_Main-92	Kirkland_Manholes-85	147.38	Kirkland_Manholes-84	141.87	73.4	7.51	8	Concrete	0.013	1,486	3	9	12	0.8	SM14-Ex-EX24	
Kirkland_Main-93	Kirkland_Manholes-83	157.35	Kirkland_Manholes-85	147.38	229.6	4.34	8	Concrete	0.013	1,130	1	4	6	0.5	SM14-Ex-EX24	
Kirkland_Main-95	Kirkland_Manholes-82	150.35	Kirkland_Manholes-86	148.26	180.8	1.16	8	Concrete	0.013	583	8	26	34	5.8	SM14-Ex-EX15	
Kirkland_Main-96	Kirkland_Manholes-87	163.95	Kirkland_Manholes-147	139.14	319.7	7.76	8	Concrete	0.013	1,511	40	111	151	10	SM14-Ex-EX25	
Kirkland_Main-97	Kirkland_Manholes-67	185.01	Kirkland_Manholes-87	163.95	332	6.34	8	Concrete	0.013	1,366	38	107	144	10.6	SM14-Ex-EX25	
Kirkland_Main-98	Kirkland_Manholes-88	192.85	Kirkland_Manholes-89	177.59	273.6	5.58	8	Concrete	0.013	1,281	2	4	6	0.5	SM14-Ex-EX26	
Kirkland_Main-99	Kirkland_Manholes-90	174.66	Kirkland_Manholes-91	170.09	87.7	5.21	8	Concrete	0.013	1,238	1	4	5	0.4	SM14-Ex-EX27	
Kirkland_Main-100	Kirkland_Manholes-92	172.99	Kirkland_Manholes-91	170.09	82	3.53	8	Concrete	0.013	1,019	1	4	5	0.5	SM14-Ex-EX27	
Kirkland_Main-101	Kirkland_Manholes-91	170.09	Kirkland_Manholes-152	157.79	45.8	26.87	8	Concrete	0.013	2,811	3	13	15	0.5	SM14-Ex-EX27	Slope verified in as-builts
Kirkland_Main-103	Kirkland_Manholes-98	253.76	Kirkland_Manholes-97	241.6	353.8	3.44	8	Concrete	0.013	1,005	3	4	7	0.7	SM14-Ex-EX8	
Kirkland_Main-104	Kirkland_Manholes-2944	250.07	Kirkland_Manholes-2943	249.65	93.4	0.45	8	PVC	0.01	473	0	4	4	0.8		
Kirkland_Main-105	Kirkland_Manholes-97	241.6	Kirkland_Manholes-95	228.66	356.1	3.63	8	Concrete	0.013	1,034	5	9	14	1.3	SM14-Ex-EX8	
Kirkland_Main-106	Kirkland_Manholes-95	228.66	Kirkland_Manholes-96	228	106.1	0.62	8	Concrete	0.013	428	7	13	20	4.7	SM14-Ex-EX8	
Kirkland_Main-107	Kirkland_Manholes-96	228	Kirkland_Manholes-93	223.12	245.5	1.99	8	Concrete	0.013	765	8	17	25	3.3	SM14-Ex-EX8	
Kirkland_Main-108	Kirkland_Manholes-93	223.12	Kirkland_Manholes-94	210.17	176.3	7.35	8	Concrete	0.013	1,470	9	21	30	2.1	SM14-Ex-EX8	
Kirkland_Main-109	Kirkland_Manholes-94	210.17	Kirkland_Manholes-78	207.46	295.3	0.92	8	Concrete	0.013	520	12	30	42	8.1	SM14-Ex-EX17	
Kirkland_Main-110	Kirkland_Manholes-1024	212.11	Kirkland_Manholes-94	210.17	143.5	1.35	8	Concrete	0.013	631	1	4	6	0.9	SM14-Ex-EX17	
Kirkland_Main-111	Kirkland_Manholes-106	44.49	Kirkland_Manholes-242	21.02	301.2	7.79	8	Concrete	0.013	1,514	46	209	255	16.8	SM14-Ex-EX12	
Kirkland_Main-112	Kirkland_Manholes-105	48.51	Kirkland_Manholes-106	44.49	358.2	1.12	8	Concrete	0.013	575	44	205	249	43.3	SM14-Ex-EX12	
Kirkland_Main-113	Kirkland_Manholes-103	59.75	Kirkland_Manholes-105	48.51	350.5	3.21	8	Concrete	0.013	971	43	201	244	25.1	SM14-Ex-EX12	
Kirkland_Main-114	Kirkland_Manholes-104	60.14	Kirkland_Manholes-103	59.75	61	0.64	8	PVC	0.01	564	8	43	51	9		
Kirkland_Main-115	Kirkland_Manholes-102	61.04	Kirkland_Manholes-104	60.14	158.9	0.57	8	PVC	0.01	531	7	38	46	8.6		
Kirkland_Main-116	Kirkland_Manholes-101	61.95	Kirkland_Manholes-102	61.04	98.7	0.92	8	PVC	0.01	676	7	34	41	6.1		
Kirkland_Main-117	Kirkland_Manholes-99	74.09	O-41	72.48	38.5	4.19	8	PVC	0.01	1,443	65	15	80	5.5		
Kirkland_Main-119	Kirkland_Manholes-107	262.65	Kirkland_Manholes-2737	259.86	239.4	1.17	8	PVC	0.01	761	2	4	6	0.8		
Kirkland_Main-120	Kirkland_Manholes-109	325.4	Kirkland_Manholes-110	324.77	37.7	1.67	8	PVC	0.01	912	11	53	64	7.1		
Kirkland_Main-121	Kirkland_Manholes-110	324.77	Kirkland_Manholes-111	324	11.2	6.85	8	PVC	0.01	1,846	18	76	93	5.1		
Kirkland_Main-122	Kirkland_Manholes-108	326.5	Kirkland_Manholes-109	325.4	336.7	0.33	8	PVC	0.01	403	9	30	40	9.8		
Kirkland_Main-123	Kirkland_Manholes-112	326.56	Kirkland_Manholes-110	324.77	134.2	1.33	8	PVC	0.01	814	6	15	21	2.6		
Kirkland_Main-124	Kirkland_Manholes-113	357.54	Kirkland_Manholes-112	326.56	558	5.55	8	PVC	0.01	1,661	4	8	12	0.7		
Kirkland_Main-125	Kirkland_Manholes-134	351.46	Kirkland_Manholes-835	347	314.9	1.42	8	PVC	0.01	839	2	4	6	0.7		Drop Connection
Kirkland_Main-126	Kirkland_Manholes-128	355.4	Kirkland_Manholes-127	354	128.2	1.09	8	PVC	0.01	737	2	4	6	0.8		
Kirkland_Main-127	Kirkland_Manholes-127	354	Kirkland_Manholes-126	343.91	279.9	3.6	8	PVC	0.01	1,339	3	8	11	0.8		
Kirkland_Main-128	Kirkland_Manholes-126	343.91	Kirkland_Manholes-125	337.71	240.8	2.58	8	PVC	0.01	1,131	5	12	17	1.5		
Kirkland_Main-129	Kirkland_Manholes-125	337.71	Kirkland_Manholes-838	337.31	98.6	0.41	8	PVC	0.01	449	6	16	22	4.9		
Kirkland_Main-130	Kirkland_Manholes-129	356.73	Kirkland_Manholes-130	350.77	205.5	2.9	8	Concrete	0.013	924	3	4	7	0.7	SM14-Ex-EX32	
Kirkland_Main-131	Kirkland_Manholes-130	350.77	Kirkland_Manholes-131	322.01	184.9	15.56	8	PVC	0.01	2,781	4	8	12	0.4		
Kirkland_Main-132	Kirkland_Manholes-133	323.35	Kirkland_Manholes-131	322.01	242.6	0.55	8	PVC	0.01	524	25	72	97	18.4		
Kirkland_Main-133	Kirkland_Manholes-842	324.88	Kirkland_Manholes-133	323.35	209.8	0.73	8	PVC	0.01	602	24	68	91	15.1		
Kirkland_Main-134	Kirkland_Manholes-131	322.01	Kirkland_Manholes-132	319.83	182.3	1.2	8	PVC	0.01	771	30	83	113	14.7		
Kirkland_Main-135	Kirkland_Manholes-132	319.83	Kirkland_Manholes-116	315.23	159	2.89	8	PVC	0.01	1,199	31	87	119	9.9		
Kirkland_Main-136	Kirkland_Manholes-115	335.3	Kirkland_Manholes-116	315.23	256.3	7.83	8	PVC	0.01	1,973	3	8	187	9.5		
Kirkland_Main-137	Kirkland_Manholes-114	360.4	Kirkland_Manholes-115	335.3	252.2	9.95	8	PVC	0.01	2,224	1	4	5	0.2		
Kirkland_Main-138	Kirkland_Manholes-1806	38.89	Kirkland_Manholes-2926	31.46	54.5	13.64	8	Concrete	0.013	2,003	87	311	398	19.8	SM4	

Existing - Peak Hour Flow - Pipe Capacity Table

Label	Upstream Node	Upstream Invert Elevation (ft)	Downstream Node	Downstream Invert Elevation (ft)	Length (ft)	Slope (%)	Diameter (in)	Material	Manning's n	Design Capacity (gpm)	Domestic Flow (gpm)	I/I Flow (gpm)	Total Flow (gpm)	Percent Full (%)	CIP No.	Notes
Kirkland_Main-139	Kirkland_Manholes-2926	31.46	Kirkland_Manholes-1396	27.46	24.1	16.61	8	PVC	0.01	2,873	87	319	406	14.1	SM4	
Kirkland_Main-140	Kirkland_Manholes-123	328.2	Kirkland_Manholes-124	326.1	151.9	1.38	8	PVC	0.01	829	2	8	10	1.2		
Kirkland_Main-141	Kirkland_Manholes-124	326.1	Kirkland_Manholes-109	325.4	313.3	0.22	8	PVC	0.01	333	2	15	17	5.2		
Kirkland_Main-142	Kirkland_Manholes-122	345.33	Kirkland_Manholes-108	326.5	238.6	7.89	8	PVC	0.01	1,981	9	23	32	1.6		
Kirkland_Main-143	Kirkland_Manholes-120	360.7	Kirkland_Manholes-121	358.16	294.2	0.86	8	PVC	0.01	655	3	8	11	1.7		
Kirkland_Main-144	Kirkland_Manholes-121	358.16	Kirkland_Manholes-122	345.33	387.6	3.31	8	PVC	0.01	1,283	6	15	21	1.6		
Kirkland_Main-145	Kirkland_Manholes-119	359.58	Kirkland_Manholes-118	354.26	105.6	5.04	8	PVC	0.01	1,583	1	4	5	0.3		
Kirkland_Main-146	Kirkland_Manholes-118	354.26	Kirkland_Manholes-117	315.69	251.8	15.32	8	PVC	0.01	2,760	2	8	10	0.4		
Kirkland_Main-147	Kirkland_Manholes-117	315.69	Kirkland_Manholes-116	315.23	331.8	0.14	8	PVC	0.01	263	3	12	15	5.6		
Kirkland_Main-148	Kirkland_Manholes-116	315.23	Kirkland_Manholes-137	298.8	246.4	6.67	8	PVC	0.01	1,821	38	111	325	17.8		
Kirkland_Main-149	Kirkland_Manholes-137	298.8	Kirkland_Manholes-1076	298.68	103.3	0.12	8	PVC	0.01	240	40	119	336	139.6	SM14-Ex-EX23	
Kirkland_Main-150	Kirkland_Manholes-138	300.28	Kirkland_Manholes-137	298.8	187.2	0.79	8	PVC	0.01	627	2	4	6	0.9		
Kirkland_Main-151	Kirkland_Manholes-135	297.13	Kirkland_Manholes-136	295.76	244.5	0.56	8	PVC	0.01	528	2	4	6	1.1		
Kirkland_Main-152	Kirkland_Manholes-136	295.76	Kirkland_Manholes-1064	278.57	324.4	5.3	8	PVC	0.01	1,623	3	8	11	0.7		
Kirkland_Main-154	Kirkland_Manholes-139	305.82	Kirkland_Manholes-1078	305.14	98	0.69	8	PVC	0.01	587	1	4	5	0.9		
Kirkland_Main-156	Kirkland_Manholes-140	281.69	Kirkland_Manholes-141	277.32	84.7	5.16	8	PVC	0.01	1,601	1	4	5	0.3		
Kirkland_Main-157	Kirkland_Manholes-141	277.32	Kirkland_Manholes-142	276.94	95.7	0.4	8	PVC	0.01	446	1	8	9	2		Drop Connection
Kirkland_Main-158	Kirkland_Manholes-142	255.54	Kirkland_Manholes-1090	254.86	50.7	1.34	8	PVC	0.01	817	1	12	13	1.6		
Kirkland_Main-160	Kirkland_Manholes-111	324	TREND_WETWELL	317.75	16.6	37.69	8	PVC	0.01	4,328	18	83	102	2.3		
Kirkland_Main-161	Kirkland_Manholes-144	88.96	Kirkland_Manholes-146	84.42	39.5	11.5	8	PVC	0.01	2,391	6	17	23	1		
Kirkland_Main-162	Kirkland_Manholes-86	148.26	Kirkland_Manholes-157	123.36	221.1	11.26	8	Concrete	0.013	1,820	9	30	39	2.2	SM14-Ex-EX15	
Kirkland_Main-163	Kirkland_Manholes-84	141.87	Kirkland_Manholes-155	126.86	190.9	7.86	8	Concrete	0.013	1,521	4	13	17	1.1	SM14-Ex-EX24	
Kirkland_Main-164	Kirkland_Manholes-156	125.08	Kirkland_Manholes-157	123.36	264.1	0.65	8	Concrete	0.013	438	6	21	28	6.3	SM14-Ex-EX24	
Kirkland_Main-165	Kirkland_Manholes-157	123.36	Kirkland_Manholes-158	121.97	144.6	0.96	8	Concrete	0.013	532	17	55	72	13.6	SM14-Ex-EX15	
Kirkland_Main-166	Kirkland_Manholes-147	139.14	Kirkland_Manholes-148	138.62	289.8	0.18	8	Concrete	0.013	230	42	115	157	68.4	SM14-Ex-EX25	
Kirkland_Main-167	Kirkland_Manholes-148	138.62	Kirkland_Manholes-149	122.95	57.1	27.47	8	Concrete	0.013	2,842	42	119	162	5.7	SM14-Ex-EX25	
Kirkland_Main-168	Kirkland_Manholes-149	122.95	Kirkland_Manholes-150	116.05	168.5	4.1	8	Concrete	0.013	1,098	42	124	166	15.1	SM14-Ex-EX25	
Kirkland_Main-169	Kirkland_Manholes-153	130.01	Kirkland_Manholes-150	116.05	56.4	24.77	8	Concrete	0.013	2,699	5	17	22	0.8	SM14-Ex-EX26	
Kirkland_Main-170	Kirkland_Manholes-150	116.05	Kirkland_Manholes-159	80.68	226.3	15.63	8	Concrete	0.013	2,144	52	166	218	10.2	SM14-Ex-EX28	
Kirkland_Main-171	Kirkland_Manholes-151	132.11	Kirkland_Manholes-150	116.05	132.2	12.15	8	Concrete	0.013	1,891	3	21	25	1.3	SM14-Ex-EX27	
Kirkland_Main-172	Kirkland_Manholes-152	157.79	Kirkland_Manholes-151	132.11	148.9	17.25	8	Concrete	0.013	2,252	3	17	20	0.9	SM14-Ex-EX27	
Kirkland_Main-173	Kirkland_Manholes-174	143.33	Kirkland_Manholes-153	130.01	57.7	23.09	8	Concrete	0.013	2,606	4	13	17	0.7	SM14-Ex-EX26	
Kirkland_Main-174	Kirkland_Manholes-89	177.59	Kirkland_Manholes-174	143.33	179.4	19.1	8	Concrete	0.013	2,370	3	9	12	0.5	SM14-Ex-EX26	
Kirkland_Main-175	Kirkland_Manholes-155	126.86	Kirkland_Manholes-156	125.08	248.1	0.72	8	Concrete	0.013	459	5	17	22	4.7	SM14-Ex-EX24	
Kirkland_Main-176	Kirkland_Manholes-158	121.97	Kirkland_Manholes-160	41.73	324.9	24.69	8	Concrete	0.013	2,695	18	60	78	2.9	SM14-Ex-EX15	
Kirkland_Main-177	Kirkland_Manholes-160	41.73	Kirkland_Manholes-175	34.4	159.3	4.6	8	Concrete	0.013	1,163	19	64	83	7.1	SM14-Ex-EX15	
Kirkland_Main-178	Kirkland_Manholes-168	22.33	Kirkland_Manholes-166	21.44	221.6	0.4	8	PVC	0.01	446	1	4	5	1.2		
Kirkland_Main-179	Kirkland_Manholes-165	60.59	Kirkland_Manholes-166	21.44	398.8	9.82	8	PVC	0.01	2,209	1	4	5	0.2		
Kirkland_Main-180	Kirkland_Manholes-166	21.44	Kirkland_Manholes-167	21.4	9.5	0.4	8	PVC	0.01	445	2	13	15	3.4		Drop Connection
Kirkland_Main-181	Kirkland_Manholes-143	71.16	Kirkland_Manholes-164	59.16	83.9	14.3	8	PVC	0.01	2,666	13	47	60	2.2		
Kirkland_Main-182	Kirkland_Manholes-146	84.42	Kirkland_Manholes-143	71.16	154.2	8.6	8	PVC	0.01	2,067	10	38	49	2.4		
Kirkland_Main-183	Kirkland_Manholes-163	106.36	Kirkland_Manholes-146	84.42	161.9	13.55	8	PVC	0.01	2,596	4	17	21	0.8		
Kirkland_Main-184	Kirkland_Manholes-161	132.09	Kirkland_Manholes-162	124.37	152	5.08	8	PVC	0.01	1,589	3	9	11	0.7		
Kirkland_Main-185	Kirkland_Manholes-162	124.37	Kirkland_Manholes-163	106.36	185.8	9.69	8	PVC	0.01	2,195	4	13	16	0.7		
Kirkland_Main-186	Kirkland_Manholes-169	21.92	Kirkland_Manholes-167	19.46	234.8	1.05	12	Concrete	0.013	1,637	303	1,101	1,404	85.8	SM3	
Kirkland_Main-187	Kirkland_Manholes-170	23.23	Kirkland_Manholes-169	21.92	100.1	1.31	12	Concrete	0.013	1,829	300	1,084	1,384	75.7	SM3	
Kirkland_Main-188	Kirkland_Manholes-2762	13.1	Kirkland_Manholes-2761	12.79	196.5	0.16	18	PVC	0.01	2,434	446	1,555	2,302	94.6	SM14-Ex-EX10	
Kirkland_Main-189	Kirkland_Manholes-173	34.1	Kirkland_Manholes-172	31.43	44.6	5.99	8	PVC	0.01	1,725	3	13	15	0.9		
Kirkland_Main-190	Kirkland_Manholes-178	67.04	Kirkland_Manholes-179	37.91	174.4	16.71	8	PVC	0.01	2,882	4	9	13	0.4		
Kirkland_Main-191	Kirkland_Manholes-154	101.95	Kirkland_Manholes-178	67.04	253.3	13.78	8	PVC	0.01	2,617	2	4	7	0.3		
Kirkland_Main-192	Kirkland_Manholes-188	58.06	Kirkland_Manholes-187	54.23	46.2	8.28	12	Concrete	0.013	4,602	202	661	864	18.8	SM14-Ex-EX30	
Kirkland_Main-193	Kirkland_Manholes-187	54.23	Kirkland_Manholes-185	53.13	306	0.36	36	Concrete	0.013	17,947	203	666	869	4.8	SM14-Ex-EX30	
Kirkland_Main-194	Kirkland_Manholes-159	80.68	Kirkland_Manholes-186	56.15	205.5	11.94	8	Concrete	0.013	1,874	52	171	223	11.9	SM14-Ex-EX28	
Kirkland_Main-195	Kirkland_Manholes-189	57.91	Kirkland_Manholes-186	56.15	258.6	0.68	8	Concrete	0.013	447	2	4	6	1.3	SM14-Ex-EX29	
Kirkland_Main-196	Kirkland_Manholes-186	56.15	Kirkland_Manholes-185	53.13	48.4	6.24	12	Concrete	0.013	3,994	55	179	234	5.9	SM14-Ex-EX28	
Kirkland_Main-197	Kirkland_Manholes-185	53.13	Kirkland_Manholes-183	41.05	170.7	7.08	12	Ductile Iron	0.012	4,608	258	849	1,108	24	SM14-Ex-EX30	
Kirkland_Main-198	Kirkland_Manholes-182	53.5	Kirkland_Manholes-181	38.4	151.6	9.96	8	PVC	0.01	2,225	1	4	6	0.2		
Kirkland_Main-199	Kirkland_Manholes-314	150.22	Kirkland_Manholes-315	148.46	139.8	1.26	8	PVC	0.01	791	0	4	4	0.5		
Kirkland_Main-200	Kirkland_Manholes-315	148.46	Kirkland_Manholes-316	147.8	125.4	0.53	8	PVC	0.01	512	0	9	9	1.7		
Kirkland_Main-201	Kirkland_Manholes-316	147.8	Kirkland_Manholes-317	146.79	246.9	0.41	8	PVC	0.01	451	89	316	405	89.9	SM14-Ex-EX30	
Kirkland_Main-202	Kirkland_Manholes-1205	19.63	Kirkland_Manholes-1850	19.39	404.6	0.06	8	Concrete	0.013	132	1	6	7	5.4	SM10	
Kirkland_Main-203	Kirkland_Manholes-1187	22.69	Kirkland_Manholes-1188	22.09	184.7	0.32	10	sbestos Ceme	0.011	662	1	9	9	1.4	SM14-Ex-EX37	

Existing - Peak Hour Flow - Pipe Capacity Table

Label	Upstream Node	Upstream Invert Elevation (ft)	Downstream Node	Downstream Invert Elevation (ft)	Length (ft)	Slope (%)	Diameter (in)	Material	Manning's n	Design Capacity (gpm)	Domestic Flow (gpm)	I/I Flow (gpm)	Total Flow (gpm)	Percent Full (%)	CIP No.	Notes
Kirkland_Main-204	Kirkland_Manholes-1188	22.09	Kirkland_Manholes-1189	21.99	127.3	0.08	10	sbestos Ceme	0.011	326	2	18	19	5.9	SM14-Ex-EX37	
Kirkland_Main-205	Kirkland_Manholes-1189	21.99	Kirkland_Manholes-1202	18.39	139.2	2.59	10	sbestos Ceme	0.011	1,869	3	27	30	1.6	SM14-Ex-EX37	
Kirkland_Main-206	Kirkland_Manholes-1202	18.39	Kirkland_Manholes-1203	18.22	388.5	0.04	10	sbestos Ceme	0.011	243	5	35	40	16.6	SM14-Ex-EX37	
Kirkland_Main-207	Kirkland_Manholes-1203	18.22	Kirkland_Manholes-1204	17.89	122.5	0.27	10	sbestos Ceme	0.011	603	6	44	50	8.3	SM14-Ex-EX37	
Kirkland_Main-208	Kirkland_Manholes-1204	17.89	Kirkland_Manholes-516	17.69	304.6	0.07	10	sbestos Ceme	0.011	298	7	53	60	20.2	SM14-Ex-EX37	
Kirkland_Main-209	Kirkland_Manholes-1197	181.82	Kirkland_Manholes-1196	172.3	310.3	3.07	8		0.012	1,029	1	41	42	4.1		
Kirkland_Main-210	Kirkland_Manholes-1196	172.3	Kirkland_Manholes-1195	162.64	327.7	2.95	8		0.012	1,009	2	49	51	5.1		
Kirkland_Main-211	Kirkland_Manholes-1195	162.64	Kirkland_Manholes-1190	151.12	307.8	3.74	8		0.012	1,137	2	58	60	5.3		
Kirkland_Main-212	Kirkland_Manholes-1190	151.12	Kirkland_Manholes-1405	132.7	345	5.34	8		0.012	1,358	4	74	78	5.7		
Kirkland_Main-213	Kirkland_Manholes-1191	345.24	Kirkland_Manholes-1192	340.89	127.3	3.42	6	Vitrified Clay	0.013	465	14	4	18	3.8		
Kirkland_Main-214	Kirkland_Manholes-1192	340.89	Kirkland_Manholes-1193	318.62	250.8	8.88	6	Vitrified Clay	0.013	750	60	8	67	9		
Kirkland_Main-215	Kirkland_Manholes-1193	318.62	Kirkland_Manholes-1194	312.16	165.2	3.91	6	Vitrified Clay	0.013	498	60	12	71	14.3		
Kirkland_Main-216	Kirkland_Manholes-1194	312.16	Kirkland_Manholes-1212	307.51	140.5	3.31	6	Concrete	0.013	458	60	16	75	16.5		
Kirkland_Main-217	Kirkland_Manholes-1146	215.3	Kirkland_Manholes-500	209.24	317	1.91	6	Concrete	0.013	348	13	49	62	17.8	SM4	
Kirkland_Main-218	Kirkland_Manholes-1225	212.63	Kirkland_Manholes-1147	194.47	343.1	5.29	6	Concrete	0.013	579	2	8	10	1.7	SM14-Ex-EX88	
Kirkland_Main-219	Kirkland_Manholes-500	209.24	Kirkland_Manholes-1147	194.47	315.3	4.68	8	Concrete	0.013	1,174	18	66	84	7.1	SM4	
Kirkland_Main-220	Kirkland_Manholes-1149	192.13	Kirkland_Manholes-1148	179.25	269.3	4.78	8	Concrete	0.013	1,186	17	64	81	6.9	SM14-Ex-EX89	
Kirkland_Main-221	Kirkland_Manholes-1147	194.47	Kirkland_Manholes-1148	179.25	319	4.77	8	Concrete	0.013	1,185	22	82	104	8.8	SM4	
Kirkland_Main-222	Kirkland_Manholes-1148	179.25	Kirkland_Manholes-1796	160.8	313.7	5.88	8	Concrete	0.013	1,315	41	154	196	14.9	SM4	
Kirkland_Main-223	Kirkland_Manholes-1171	160.49	Kirkland_Manholes-1150	151.79	210.3	4.14	6	Concrete	0.013	512	7	41	48	9.5	SM10	
Kirkland_Main-224	Kirkland_Manholes-1129	164.28	Kirkland_Manholes-1128	162.57	73.5	2.33	8	Concrete	0.013	827	0	4	4	0.5	SM14-Ex-EX4	
Kirkland_Main-225	Kirkland_Manholes-1111	165.6	O-8	165.51	22.8	0.4	8	PVC	0.01	446	1	8	9	2		
Kirkland_Main-227	Kirkland_Manholes-197	50.1	Kirkland_Manholes-196	49.03	107.3	1	8	Concrete	0.013	542	7	34	41	7.7	SM14-Ex-EX43	
Kirkland_Main-228	Kirkland_Manholes-196	49.03	Kirkland_Manholes-195	48.03	74.6	1.34	8	Concrete	0.013	628	8	38	46	7.4	SM14-Ex-EX43	
Kirkland_Main-229	Kirkland_Manholes-740	221.28	Kirkland_Manholes-711	219.85	98.7	1.45	8	PVC	0.01	849	9	4	13	1.5		
Kirkland_Main-230	Kirkland_Manholes-1107	164.79	O-9	160.2	26.3	17.47	8	Concrete	0.013	2,267	0	8	8	0.4	SM14-Ex-EX21	
Kirkland_Main-231	Kirkland_Manholes-1106	168.9	O-10	168.5	24.6	1.64	18	PVC	0.01	7,851	580	2,122	2,702	34.4		Drop Connection
Kirkland_Main-232	Kirkland_Manholes-1118	200.71	Kirkland_Manholes-1117	196.58	128.3	3.22	8	PVC	0.01	1,265	2	4	6	0.5		
Kirkland_Main-233	Kirkland_Manholes-1115	186.39	Kirkland_Manholes-1114	181.51	185.2	2.63	15	PVC	0.01	6,118	18	16	34	0.6		
Kirkland_Main-234	Kirkland_Manholes-1114	181.51	Kirkland_Manholes-1113	180.6	148.4	0.61	15	PVC	0.01	2,952	34	20	54	1.8		
Kirkland_Main-235	Kirkland_Manholes-1143	203.09	Kirkland_Manholes-1144	194	101.9	8.92	6	Concrete	0.013	752	1	8	9	1.2	SM14-Ex-EX82	
Kirkland_Main-236	Kirkland_Manholes-1144	194	Kirkland_Manholes-1145	190.6	30.2	11.26	8	PVC	0.01	2,366	1	16	18	0.7		
Kirkland_Main-237	Kirkland_Manholes-1145	190.6	Kirkland_Manholes-1211	186.99	174.5	2.07	8	PVC	0.01	1,014	1	25	26	2.6		
Kirkland_Main-238	Kirkland_Manholes-1184	19.39	Kirkland_Manholes-1185	19.29	139.1	0.07	12	sbestos Ceme	0.011	507	28	177	205	40.5	SM14-Ex-EX37	
Kirkland_Main-239	Kirkland_Manholes-1183	19.89	Kirkland_Manholes-1184	19.39	178.8	0.28	12	sbestos Ceme	0.011	999	27	168	195	19.5	SM14-Ex-EX37	
Kirkland_Main-242	Kirkland_Manholes-1131	191.56	Kirkland_Manholes-1200	169.25	277.8	8.03	8	Concrete	0.013	1,537	16	40	56	3.7	SM14-Ex-EX63	
Kirkland_Main-243	Kirkland_Manholes-1200	169.25	Kirkland_Manholes-1201	159.96	155.1	5.99	8	Concrete	0.013	1,327	19	45	63	4.8	SM14-Ex-EX62	
Kirkland_Main-244	Kirkland_Manholes-1201	159.96	Kirkland_Manholes-1182	159	65	1.48	8	Concrete	0.013	659	20	49	69	10.4	SM14-Ex-EX62	
Kirkland_Main-245	Kirkland_Manholes-1182	159	Kirkland_Manholes-529	155.16	83.2	4.62	8	Concrete	0.013	1,165	20	53	73	6.3	SM14-Ex-EX62	If flow exceeds capacity, overflow MH will be activated; model appropriately.
Kirkland_Main-246	Kirkland_Manholes-529	155.16	Kirkland_Manholes-527	146.55	210.2	4.1	8	Concrete	0.013	1,098	21	57	78	7.1	SM10	
Kirkland_Main-247	Kirkland_Manholes-516	17.69	Kirkland_Manholes-2958	17.19	310.2	0.16	12	PVC	0.01	835	8	62	70	8.4	SM14-Ex-EX37	
Kirkland_Main-248	Kirkland_Manholes-318	146.51	Kirkland_Manholes-2957	145.86	162.1	0.4	8	PVC	0.01	446	89	324	414	92.8	SM14-Ex-EX30	
Kirkland_Main-249	Kirkland_Manholes-2957	145.86	Kirkland_Manholes-426	144.6	315.5	0.4	8	PVC	0.01	446	93	329	422	94.5	SM14-Ex-EX30	
Kirkland_Main-251	Kirkland_Manholes-524	157.52	Kirkland_Manholes-525	156.27	278.3	0.45	8	Concrete	0.013	363	2	16	18	5	SM10	
Kirkland_Main-253	Kirkland_Manholes-2932	327.56	Kirkland_Manholes-2931	326.77	30	2.63	8	PVC	0.01	1,144	2	24	26	2.3		
Kirkland_Main-254	Kirkland_Manholes-2931	326.77	Kirkland_Manholes-2930	326.38	131.8	0.3	8	PVC	0.01	384	3	28	31	8.1		
Kirkland_Main-255	Kirkland_Manholes-2930	326.38	Kirkland_Manholes-878	325.66	147.9	0.49	8	PVC	0.01	492	3	32	35	7.1		
Kirkland_Main-257	Kirkland_Manholes-2345	343.84	Kirkland_Manholes-2343	315.2	169.5	16.9	8	Concrete	0.013	2,229	6	20	26	1.2	SM14-Ex-EX255	
Kirkland_Main-258	Kirkland_Manholes-2344	315.75	Kirkland_Manholes-2343	315.2	137.3	0.4	8	Concrete	0.013	343	6	12	18	5.2	SM14-Ex-EX254	
Kirkland_Main-259	Kirkland_Manholes-2256	329.88	Kirkland_Manholes-2344	315.75	334.7	4.22	8	PVC	0.01	1,449	3	8	11	0.8	SM14-Ex-EX254	
Kirkland_Main-261	Kirkland_Manholes-2346	349.24	Kirkland_Manholes-2345	343.84	323.2	1.67	8	Concrete	0.013	701	2	4	6	0.8	SM14-Ex-EX255	
Kirkland_Main-262	Kirkland_Manholes-2347	359.76	Kirkland_Manholes-2345	343.84	158.1	10.07	8	Concrete	0.013	1,721	2	12	14	0.8	SM14-Ex-EX255	
Kirkland_Main-263	Kirkland_Manholes-2348	314.6	Kirkland_Manholes-2334	313.34	224.3	0.56	8	Concrete	0.013	406	14	40	54	13.2	SM14-Ex-EX254	
Kirkland_Main-264	Kirkland_Manholes-2350	364.04	Kirkland_Manholes-2347	359.76	357	1.2	8	Concrete	0.013	594	1	4	5	0.8	SM14-Ex-EX255	
Kirkland_Main-265	Kirkland_Manholes-2351	360.37	Kirkland_Manholes-2347	359.76	181.2	0.34	8	Concrete	0.013	315	1	4	5	1.6	SM14-Ex-EX255	
Kirkland_Main-266	Kirkland_Manholes-2352	284.5	Kirkland_Manholes-2259	272.05	240.1	5.18	8	Concrete	0.013	1,235	0	4	4	0.4	SM14-Ex-EX250	
Kirkland_Main-267	Kirkland_Manholes-2353	298.2	Kirkland_Manholes-2332	296.43	253	0.7	8	Concrete	0.013	454	2	4	6	1.3	SM14-Ex-EX253	
Kirkland_Main-268	Kirkland_Manholes-2355	240.55	Kirkland_Manholes-2124	217.78	364.4	6.25	8	Concrete	0.013	1,356	249	882	1,131	83.4	SM14-Ex-EX248	
Kirkland_Main-269	Kirkland_Manholes-2354	256.04	Kirkland_Manholes-2355	240.55	281.2	5.51	8	Concrete	0.013	1,273	246	878	1,124	88.3	SM14-Ex-EX248	
Kirkland_Main-270	Kirkland_Manholes-2357	271.18	Kirkland_Manholes-2354	256.04	199.4	7.59	6	Concrete	0.013	694	2	8	10	1.5	SM14-Ex-EX249	
Kirkland_Main-271	Kirkland_Manholes-2258	263.77	Kirkland_Manholes-2354	256.04	150.5	5.14	8	Concrete	0.013	1,229	243	866	1,109	90.2	SM14-Ex-EX248	

Existing - Peak Hour Flow - Pipe Capacity Table

Label	Upstream Node	Upstream Invert Elevation (ft)	Downstream Node	Downstream Invert Elevation (ft)	Length (ft)	Slope (%)	Diameter (in)	Material	Manning's n	Design Capacity (gpm)	Domestic Flow (gpm)	I/I Flow (gpm)	Total Flow (gpm)	Percent Full (%)	CIP No.	Notes
Kirkland_Main-272	Kirkland_Manholes-2356	278.21	Kirkland_Manholes-2357	271.18	149.2	4.71	8	PVC	0.01	1,530	1	4	5	0.3		
Kirkland_Main-273	Kirkland_Manholes-2324	245.37	Kirkland_Manholes-2420	230.11	227.1	6.72	8	PVC	0.01	1,828	40	147	187	10.2		
Kirkland_Main-274	Kirkland_Manholes-2358	262.09	Kirkland_Manholes-2412	260.78	357.3	0.37	8	PVC	0.01	427	4	8	12	2.7		
Kirkland_Main-275	Kirkland_Manholes-2359	271.5	Kirkland_Manholes-2358	262.09	128.6	7.32	8	PVC	0.01	1,907	2	4	6	0.3		
Kirkland_Main-276	Kirkland_Manholes-2362	285.37	Kirkland_Manholes-2360	266.1	385.1	5	8	PVC	0.01	1,577	19	60	78	5		
Kirkland_Main-277	Kirkland_Manholes-2360	266.1	Kirkland_Manholes-2411	259.15	259.9	2.67	8	PVC	0.01	1,153	20	64	84	7.3		
Kirkland_Main-278	Kirkland_Manholes-2361	291.01	Kirkland_Manholes-2362	285.37	28	20.16	8	PVC	0.01	3,166	3	8	11	0.3		
Kirkland_Main-279	Kirkland_Manholes-2371	291.2	Kirkland_Manholes-2362	285.37	123.7	4.71	8	PVC	0.01	1,530	15	48	62	4.1		
Kirkland_Main-280	Kirkland_Manholes-2363	291.88	Kirkland_Manholes-2361	291.01	353	0.25	8	PVC	0.01	350	2	4	6	1.6		
Kirkland_Main-281	Kirkland_Manholes-2364	284.3	Kirkland_Manholes-2429	273.52	255	4.23	8	Concrete	0.013	1,115	26	91	117	10.5	SM14-Ex-EX260	
Kirkland_Main-282	Kirkland_Manholes-2382	327.1	Kirkland_Manholes-2369	315.99	220.4	5.04	8	PVC	0.01	1,583	3	4	7	0.4		
Kirkland_Main-283	Kirkland_Manholes-2369	315.99	Kirkland_Manholes-2370	312.97	65.7	4.59	8	Concrete	0.013	1,162	22	68	90	7.7	SM14-Ex-EX260	
Kirkland_Main-284	Kirkland_Manholes-2383	328.5	Kirkland_Manholes-2369	315.99	277.1	4.51	8	Concrete	0.013	1,152	19	60	78	6.8	SM14-Ex-EX260	
Kirkland_Main-285	Kirkland_Manholes-2370	312.97	Kirkland_Manholes-2367	295.27	303.5	5.83	8	Concrete	0.013	1,310	23	72	94	7.2	SM14-Ex-EX260	
Kirkland_Main-286	Kirkland_Manholes-2365	289.93	Kirkland_Manholes-2364	284.3	103.6	5.44	8	Concrete	0.013	1,265	25	87	113	8.9	SM14-Ex-EX260	
Kirkland_Main-287	Kirkland_Manholes-2367	295.27	Kirkland_Manholes-2366	292.68	34.9	7.43	8	Concrete	0.013	1,478	24	75	99	6.7	SM14-Ex-EX260	
Kirkland_Main-288	Kirkland_Manholes-181	38.4	Kirkland_Manholes-180	38.25	24	0.62	8	PVC	0.01	555	2	13	14	2.6		
Kirkland_Main-289	Kirkland_Manholes-184	40.15	Kirkland_Manholes-181	38.4	362.3	0.48	8	PVC	0.01	490	0	4	4	0.9		
Kirkland_Main-290	Kirkland_Manholes-180	38.25	Kirkland_Manholes-179	37.91	155.1	0.22	12	Ductile Iron	0.012	812	270	947	1,218	149.9	SM3	
Kirkland_Main-291	Kirkland_Manholes-179	37.91	Kirkland_Manholes-177	35.5	248.2	0.97	12	Ductile Iron	0.012	1,707	275	960	1,235	72.3	SM3	
Kirkland_Main-292	Kirkland_Manholes-177	35.5	Kirkland_Manholes-176	34.72	401.5	0.19	12	Ductile Iron	0.012	764	277	986	1,263	165.3	SM3	
Kirkland_Main-293	Kirkland_Manholes-176	34.72	Kirkland_Manholes-175	34.4	144.6	0.22	12	Ductile Iron	0.012	813	278	990	1,268	156	SM3	
Kirkland_Main-294	Kirkland_Manholes-175	34.4	Kirkland_Manholes-171	25.99	328.5	2.56	12	Concrete	0.013	2,558	297	1,058	1,355	53	SM3	
Kirkland_Main-295	Kirkland_Manholes-171	25.99	Kirkland_Manholes-170	25.29	316.1	0.22	12	Concrete	0.013	750	299	1,080	1,379	183.9	SM3	Drop Connection
Kirkland_Main-296	Kirkland_Manholes-172	31.43	Kirkland_Manholes-171	31.34	21.8	0.4	8	PVC	0.01	446	3	17	20	4.4		Drop Connection
Kirkland_Main-297	Kirkland_Manholes-190	38.49	Kirkland_Manholes-180	38.25	107	0.22	12	Ductile Iron	0.012	810	269	930	1,199	148	SM3	
Kirkland_Main-298	Kirkland_Manholes-183	41.05	Kirkland_Manholes-190	38.49	284.2	0.9	12	Ductile Iron	0.012	1,646	268	926	1,194	72.6	SM3	
Kirkland_Main-299	Kirkland_Manholes-167	19.46	Kirkland_Manholes-241	14.7	339.1	1.4	12	Concrete	0.013	1,894	305	1,118	1,423	75.1	SM3	
Kirkland_Main-300	Kirkland_Manholes-164	59.16	Kirkland_Manholes-242	58.15	252.4	0.4	8	PVC	0.01	446	14	51	65	14.6		Drop Connection
Kirkland_Main-301	Kirkland_Manholes-203	83.91	Kirkland_Manholes-202	68.28	127.4	12.27	8	PVC	0.01	2,470	1	4	5	0.2		
Kirkland_Main-302	Kirkland_Manholes-202	68.28	Kirkland_Manholes-204	54.86	133.6	10.05	8	PVC	0.01	2,235	1	9	10	0.4		
Kirkland_Main-303	Kirkland_Manholes-204	54.86	Kirkland_Manholes-169	21.92	184.1	17.89	8	PVC	0.01	2,982	3	13	16	0.5		
Kirkland_Main-304	Kirkland_Manholes-209	226.32	Kirkland_Manholes-210	216.33	137.5	7.27	8	Vitrified Clay	0.013	1,462	2	4	7	0.4	SM14-Ex-EX66	
Kirkland_Main-306	Kirkland_Manholes-214	228.3	Kirkland_Manholes-213	213.69	210.7	6.93	8	PVC	0.01	1,856	2	4	7	0.4		
Kirkland_Main-307	Kirkland_Manholes-213	213.69	Kirkland_Manholes-212	184.62	186.4	15.59	8	PVC	0.01	2,784	6	9	14	0.5		
Kirkland_Main-308	Kirkland_Manholes-212	184.62	Kirkland_Manholes-216	184.01	222.7	0.27	8	PVC	0.01	369	33	98	131	35.6		
Kirkland_Main-309	Kirkland_Manholes-211	186.37	Kirkland_Manholes-212	184.62	362.4	0.48	8	PVC	0.01	490	25	85	111	22.6		
Kirkland_Main-310	Kirkland_Manholes-210	216.33	Kirkland_Manholes-211	186.37	372.2	8.05	8	Vitrified Clay	0.013	1,539	5	9	14	0.9	SM14-Ex-EX66	
Kirkland_Main-312	Kirkland_Manholes-216	184.01	Kirkland_Manholes-217	183.22	296	0.27	8	PVC	0.01	364	34	102	137	37.6		
Kirkland_Main-313	Kirkland_Manholes-215	220.47	Kirkland_Manholes-217	183.22	347.3	10.73	8	PVC	0.01	2,309	4	4	8	0.3		
Kirkland_Main-314	Kirkland_Manholes-208	241.09	Kirkland_Manholes-207	240.8	258.2	0.11	8	Concrete	0.013	182	4	13	16	9	SM14-Ex-EX57	
Kirkland_Main-315	Kirkland_Manholes-207	240.8	Kirkland_Manholes-206	239.08	251.3	0.68	8	Concrete	0.013	449	6	17	24	5.2	SM14-Ex-EX57	
Kirkland_Main-316	Kirkland_Manholes-1236	256.67	Kirkland_Manholes-206	239.08	279.5	6.29	8	Concrete	0.013	1,360	5	9	13	1	SM14-Ex-EX60	
Kirkland_Main-317	Kirkland_Manholes-206	239.08	Kirkland_Manholes-205	228.15	235.6	4.64	8	Concrete	0.013	1,168	12	30	42	3.6	SM14-Ex-EX57	
Kirkland_Main-318	Kirkland_Manholes-227	223.31	Kirkland_Manholes-226	219.39	138.6	2.83	8	PVC	0.01	1,186	6	30	36	3		
Kirkland_Main-319	Kirkland_Manholes-229	178.29	Kirkland_Manholes-230	172.81	192.8	2.84	8	PVC	0.01	1,189	1	4	5	0.4		
Kirkland_Main-321	Kirkland_Manholes-2569	300.83	Kirkland_Manholes-2570	299.81	42.2	2.42	8	PVC	0.01	1,096	1	4	5	0.4		
Kirkland_Main-323	Kirkland_Manholes-2570	299.81	Kirkland_Manholes-2573	298.95	117.6	0.73	8	PVC	0.01	603	2	12	14	2.3		
Kirkland_Main-325	Kirkland_Manholes-2574	291.72	Kirkland_Manholes-2578	278.46	194.2	6.83	8	PVC	0.01	1,842	5	32	37	2		
Kirkland_Main-326	Kirkland_Manholes-2575	296.63	Kirkland_Manholes-2574	291.72	277.7	1.77	8	PVC	0.01	938	4	28	32	3.4		
Kirkland_Main-327	Kirkland_Manholes-2572	298.88	Kirkland_Manholes-2575	296.63	102.9	2.19	8	PVC	0.01	1,042	3	24	27	2.6		
Kirkland_Main-330	Kirkland_Manholes-2576	288.87	Kirkland_Manholes-2577	284.91	171.7	2.31	8	PVC	0.01	1,071	1	4	5	0.5		
Kirkland_Main-331	Kirkland_Manholes-2577	284.91	Kirkland_Manholes-2580	279.25	137.4	4.12	8	PVC	0.01	1,431	2	8	10	0.7		
Kirkland_Main-332	Kirkland_Manholes-2580	279.25	Kirkland_Manholes-2579	271.58	247.7	3.1	8	PVC	0.01	1,241	3	12	15	1.2		
Kirkland_Main-333	Kirkland_Manholes-2582	256.45	Kirkland_Manholes-2583	255.68	58.5	1.32	8	Concrete	0.013	622	12	75	88	14.1	SM14-Ex-EX313	
Kirkland_Main-334	Kirkland_Manholes-2583	255.68	Kirkland_Manholes-2584	252.35	54.4	6.12	8	PVC	0.01	1,744	13	79	92	5.3	SM14-Ex-EX313	
Kirkland_Main-335	Kirkland_Manholes-2584	252.35	Kirkland_Manholes-2787	252.17	133.2	0.14	8	Concrete	0.013	199	13	83	97	48.4	SM14-Ex-EX313	
Kirkland_Main-336	Kirkland_Manholes-2581	260.74	Kirkland_Manholes-2582	256.45	63.8	6.72	8	PVC	0.01	1,828	4	20	24	1.3		
Kirkland_Main-337	Kirkland_Manholes-2786	258.1	Kirkland_Manholes-2582	256.45	266.6	0.62	8	PVC	0.01	555	8	52	60	10.7		
Kirkland_Main-338	Kirkland_Manholes-2579	271.58	Kirkland_Manholes-2581	260.74	232.4	4.66	8	PVC	0.01	1,523	3	16	19	1.3		
Kirkland_Main-339	Kirkland_Manholes-2586	274.45	Kirkland_Manholes-2585	272.57	43.2	4.35	8	PVC	0.01	1,471	1	8	9	0.6		
Kirkland_Main-340	Kirkland_Manholes-2587	285.24	Kirkland_Manholes-2586	274.45	298.8	3.61	8	PVC	0.01	1,340	1	4	5	0.4		

Existing - Peak Hour Flow - Pipe Capacity Table

Label	Upstream Node	Upstream Invert Elevation (ft)	Downstream Node	Downstream Invert Elevation (ft)	Length (ft)	Slope (%)	Diameter (in)	Material	Manning's n	Design Capacity (gpm)	Domestic Flow (gpm)	I/I Flow (gpm)	Total Flow (gpm)	Percent Full (%)	CIP No.	Notes
Kirkland_Main-342	Kirkland_Manholes-2588	292.14	Kirkland_Manholes-2589	286.31	102.9	5.66	8	Concrete	0.013	1,291	21	79	101	7.8	SM14-Ex-EX303	
Kirkland_Main-343	Kirkland_Manholes-2591	288.43	Kirkland_Manholes-2589	286.31	198.2	1.07	8	Concrete	0.013	561	1	4	5	0.8	SM14-Ex-EX305	
Kirkland_Main-344	Kirkland_Manholes-2590	303.32	Kirkland_Manholes-2588	292.14	220.1	5.08	8	Concrete	0.013	1,222	8	44	51	4.2	SM14-Ex-EX303	
Kirkland_Main-345	Kirkland_Manholes-2592	294.57	Kirkland_Manholes-2588	292.14	159.1	1.53	8	Concrete	0.013	670	2	8	10	1.5	SM14-Ex-EX306	
Kirkland_Main-346	Kirkland_Manholes-2589	286.31	Kirkland_Manholes-2593	281.14	131.6	3.93	8	Concrete	0.013	1,075	23	87	111	10.3	SM14-Ex-EX303	
Kirkland_Main-347	Kirkland_Manholes-2593	281.14	Kirkland_Manholes-2585	272.57	372.5	2.3	8	Concrete	0.013	823	24	91	115	14	SM14-Ex-EX299	
Kirkland_Main-348	Kirkland_Manholes-2585	272.57	Kirkland_Manholes-2595	270.48	180.9	1.16	8	Concrete	0.013	583	25	103	129	22	SM14-Ex-EX299	
Kirkland_Main-349	Kirkland_Manholes-2595	270.48	Kirkland_Manholes-2594	263.61	407.7	1.68	8	Concrete	0.013	704	27	107	135	19.1	SM14-Ex-EX299	
Kirkland_Main-350	Kirkland_Manholes-2594	263.61	Kirkland_Manholes-2601	228.74	402.9	8.65	8	Concrete	0.013	1,596	30	111	141	8.9	SM14-Ex-EX299	
Kirkland_Main-352	Kirkland_Manholes-2598	252.13	Kirkland_Manholes-2599	217.5	325.5	10.64	8	Concrete	0.013	1,769	3	12	15	0.8	SM14-Ex-EX301	
Kirkland_Main-353	Kirkland_Manholes-2597	256.37	Kirkland_Manholes-2598	252.13	172.1	2.46	8	Concrete	0.013	851	1	8	9	1	SM14-Ex-EX301	
Kirkland_Main-354	Kirkland_Manholes-2596	262.84	Kirkland_Manholes-2597	256.37	380.5	1.7	8	Concrete	0.013	707	0	4	4	0.6	SM14-Ex-EX301	
Kirkland_Main-355	Kirkland_Manholes-853	340.38	Kirkland_Manholes-851	339.16	105.8	1.16	8	PVC	0.01	758	0	4	4	0.5		
Kirkland_Main-356	Kirkland_Manholes-851	339.16	Kirkland_Manholes-852	338.63	131.5	0.4	8	PVC	0.01	446	6	36	42	9.3		
Kirkland_Main-357	Kirkland_Manholes-852	338.63	Kirkland_Manholes-854	336.98	245.6	0.67	8	PVC	0.01	578	6	40	46	7.9		
Kirkland_Main-358	Kirkland_Manholes-854	336.98	Kirkland_Manholes-855	335.54	321	0.45	8	PVC	0.01	472	7	44	50	10.7		
Kirkland_Main-359	Kirkland_Manholes-855	335.54	Kirkland_Manholes-857	334.93	126.6	0.48	8	PVC	0.01	489	7	48	54	11.1		
Kirkland_Main-360	Kirkland_Manholes-857	334.93	Kirkland_Manholes-856	333.21	25.3	6.8	8	PVC	0.01	1,838	7	52	59	3.2		
Kirkland_Main-361	Kirkland_Manholes-858	311.1	Kirkland_Manholes-859	309.2	142	1.34	8	Concrete	0.013	627	2	4	6	1	SM14-Ex-EX51	
Kirkland_Main-362	Kirkland_Manholes-198	52.1	Kirkland_Manholes-197	50.1	250.9	0.8	8	Concrete	0.013	484	5	30	35	7.3	SM14-Ex-EX43	
Kirkland_Main-363	Kirkland_Manholes-1648	152.03	Kirkland_Manholes-1649	151.45	206.3	0.28	10	Concrete	0.013	520	4	33	37	7.1	SM14-Ex-EX196	
Kirkland_Main-364	Kirkland_Manholes-1649	151.45	Kirkland_Manholes-1650	145.43	128.4	4.69	10	Concrete	0.013	2,129	7	41	48	2.3	SM14-Ex-EX196	
Kirkland_Main-365	Kirkland_Manholes-1651	160.29	Kirkland_Manholes-1650	145.43	297.8	4.99	8	PVC	0.01	1,575	0	16	17	1.1		
Kirkland_Main-366	Kirkland_Manholes-1652	161.6	Kirkland_Manholes-1651	160.29	197.8	0.66	8	PVC	0.01	574	0	8	9	1.5		
Kirkland_Main-369	Kirkland_Manholes-1654	136.96	Kirkland_Manholes-1653	127.26	270	3.59	8	Concrete	0.013	1,028	2	8	10	1	SM14-Ex-EX168	
Kirkland_Main-370	Kirkland_Manholes-1653	127.26	Kirkland_Manholes-1767	122.16	112.6	4.53	8	Concrete	0.013	1,154	5	16	22	1.9	SM14-Ex-EX168	
Kirkland_Main-372	Kirkland_Manholes-977	225.95	Kirkland_Manholes-978	222.9	113.4	2.69	8	PVC	0.01	1,157	8	47	54	4.7		
Kirkland_Main-374	Kirkland_Manholes-2858	23.78	Kirkland_Manholes-2857	19.7	174.1	2.34	8	Ductile Iron	0.012	900	0	5	5	0.5	SM14-Ex-EX315	
Kirkland_Main-376	Kirkland_Manholes-2865	30.12	Kirkland_Manholes-2864	27	7.9	39.25	6	PVC	0.01	2,051	13	21	34	1.6	SM14-Ex-EX314	WW Influent Pipe
Kirkland_Main-377	Kirkland_Manholes-2866	31.02	Kirkland_Manholes-2867	30.31	15.5	4.58	6	PVC	0.01	701	9	15	24	3.4	SM14-Ex-EX314	
Kirkland_Main-378	Kirkland_Manholes-2867	30.31	Kirkland_Manholes-2865	30.12	118.6	0.16	6	PVC	0.01	131	9	18	27	20.6	SM14-Ex-EX314	
Kirkland_Main-379	Kirkland_Manholes-2863	49.4	Kirkland_Manholes-2866	31.02	310.1	5.93	8	PVC	0.01	1,716	7	12	19	1.1		
Kirkland_Main-380	Kirkland_Manholes-1905	395.5	Kirkland_Manholes-1906	388.2	277.5	2.63	8	PVC	0.01	1,143	9	40	49	4.3		
Kirkland_Main-381	Kirkland_Manholes-1906	388.2	Kirkland_Manholes-1908	383.29	92.4	5.31	8	PVC	0.01	1,625	17	48	65	4		
Kirkland_Main-382	Kirkland_Manholes-1908	383.29	Kirkland_Manholes-1909	380	18.3	18.02	8	PVC	0.01	2,993	26	60	85	2.8		
Kirkland_Main-383	Kirkland_Manholes-1910	392.49	Kirkland_Manholes-1908	383.29	192.6	4.78	8	PVC	0.01	1,541	8	8	16	1.1		
Kirkland_Main-386	Kirkland_Manholes-1911	394.49	Kirkland_Manholes-1910	392.49	114.9	1.74	8	PVC	0.01	930	0	4	4	0.4		
Kirkland_Main-388	Kirkland_Manholes-1912	380.62	Kirkland_Manholes-1907	380.32	64.6	0.46	8	PVC	0.01	480	17	8	25	5.2		
Kirkland_Main-389	Kirkland_Manholes-1913	381.47	Kirkland_Manholes-1912	380.62	181.1	0.47	8	PVC	0.01	483	17	4	21	4.4		
Kirkland_Main-390	Kirkland_Manholes-1915	403.84	Kirkland_Manholes-1903	399.77	113	3.6	8	PVC	0.01	1,338	1	4	5	0.4		
Kirkland_Main-391	Kirkland_Manholes-1914	376.04	Kirkland_Manholes-1916	361.73	343.6	4.16	8	PVC	0.01	1,439	0	4	4	0.3		
Kirkland_Main-392	Kirkland_Manholes-1916	361.73	Kirkland_Manholes-1965	345.05	397.2	4.2	8	PVC	0.01	1,445	29	20	49	3.4		
Kirkland_Main-393	Kirkland_Manholes-1917	413.2	Kirkland_Manholes-1919	411.73	326.8	0.45	10	Concrete	0.013	660	57	191	248	37.6	SM14-Ex-EX215	
Kirkland_Main-394	Kirkland_Manholes-1918	411.61	Kirkland_Manholes-1920	409.24	389.6	0.61	10	Concrete	0.013	767	88	358	445	58.1	SM14-Ex-EX215	
Kirkland_Main-395	Kirkland_Manholes-1919	411.73	Kirkland_Manholes-1918	411.61	19.4	0.61	10	Concrete	0.013	767	58	195	253	33	SM14-Ex-EX215	
Kirkland_Main-396	Kirkland_Manholes-1966	418.21	Kirkland_Manholes-1918	411.61	309.4	2.13	8	Concrete	0.013	792	29	159	188	23.7	SM14-Ex-EX216	
Kirkland_Main-397	Kirkland_Manholes-2018	417.59	Kirkland_Manholes-1920	409.24	266.4	3.13	8	PVC	0.01	1,248	1	4	5	0.4		
Kirkland_Main-398	Kirkland_Manholes-2017	412	Kirkland_Manholes-1921	405.86	284.9	2.16	8	PVC	0.01	1,035	4	20	24	2.3		
Kirkland_Main-399	Kirkland_Manholes-1921	405.86	Kirkland_Manholes-1923	399.87	337.2	1.78	10	Concrete	0.013	1,311	95	393	489	37.3	SM14-Ex-EX215	Drop Connection
Kirkland_Main-400	Kirkland_Manholes-2013	413.74	Kirkland_Manholes-1922	401.71	397	3.03	8	PVC	0.01	1,227	20	95	116	9.4		
Kirkland_Main-401	Kirkland_Manholes-1924	396.12	Kirkland_Manholes-1925	391.68	40.1	11.08	8	PVC	0.01	2,347	4	16	20	0.8		
Kirkland_Main-402	Kirkland_Manholes-2012	406.67	Kirkland_Manholes-1924	396.12	354.7	2.97	8	PVC	0.01	1,216	3	12	15	1.2		
Kirkland_Main-403	Kirkland_Manholes-1926	383.42	Kirkland_Manholes-1927	378.37	328.1	1.54	10	Concrete	0.013	1,220	123	528	651	53.4	SM14-Ex-EX205	
Kirkland_Main-404	Kirkland_Manholes-1927	378.37	Kirkland_Manholes-1928	375.97	126.7	1.89	10	Concrete	0.013	1,354	123	532	655	48.4	SM14-Ex-EX205	
Kirkland_Main-405	Kirkland_Manholes-1922	401.71	Kirkland_Manholes-3030	397.75	20.7	19.14	8	PVC	0.01	3,085	22	99	122	3.9		
Kirkland_Main-406	Kirkland_Manholes-1923	399.87	Kirkland_Manholes-3030	397.75	24.4	8.7	12	PVC	0.01	6,130	96	397	493	8		
Kirkland_Main-407	Kirkland_Manholes-3030	397.75	Kirkland_Manholes-1925	391.68	339.3	1.79	12	PVC	0.01	2,781	118	501	619	22.2		
Kirkland_Main-408	Kirkland_Manholes-1925	391.68	Kirkland_Manholes-3031	384.74	433.2	1.6	12	PVC	0.01	2,631	123	521	643	24.5		
Kirkland_Main-409	Kirkland_Manholes-2750	105.56	Kirkland_Manholes-2749	94.38	64.8	17.26	8	PVC	0.01	2,929	24	6	30	1		
Kirkland_Main-410	Kirkland_Manholes-2751	82.43	Kirkland_Manholes-2879	68.04	243.9	5.9	8	Concrete	0.013	1,317	0	6	6	0.5	SM14-Ex-EX280	
Kirkland_Main-412	Kirkland_Manholes-373	230.9	Kirkland_Manholes-1080	229.14	244	0.72	8	PVC	0.01	599	62	250	312	52.1		
Kirkland_Main-413	Kirkland_Manholes-195	48.03	Kirkland_Manholes-193	45.46	195.3	1.32	8	Concrete	0.013	622	9	43	52	8.3	SM14-Ex-EX43	

Existing - Peak Hour Flow - Pipe Capacity Table

Label	Upstream Node	Upstream Invert Elevation (ft)	Downstream Node	Downstream Invert Elevation (ft)	Length (ft)	Slope (%)	Diameter (in)	Material	Manning's n	Design Capacity (gpm)	Domestic Flow (gpm)	I/I Flow (gpm)	Total Flow (gpm)	Percent Full (%)	CIP No.	Notes
Kirkland_Main-414	Kirkland_Manholes-193	45.46	Kirkland_Manholes-192	42.9	32.1	7.96	8	Concrete	0.013	1,530	9	47	56	3.7	SM14-Ex-EX43	
Kirkland_Main-415	Kirkland_Manholes-194	50.84	Kirkland_Manholes-192	50.61	58.2	0.4	8	PVC	0.01	446	0	4	4	1		Drop Connection
Kirkland_Main-416	Kirkland_Manholes-192	42.9	Kirkland_Manholes-191	42.5	357.1	0.11	8	Concrete	0.013	182	9	68	77	42.6	SM14-Ex-EX44	
Kirkland_Main-417	Kirkland_Manholes-191	42.5	Kirkland_Manholes-183	41.05	287.2	0.5	8	Concrete	0.013	385	9	73	82	21.2	SM14-Ex-EX44	
Kirkland_Main-418	Kirkland_Manholes-201	56.98	Kirkland_Manholes-192	42.9	368.5	3.82	8	Concrete	0.013	1,060	0	13	13	1.2	SM14-Ex-EX43	
Kirkland_Main-419	Kirkland_Manholes-199	54.68	Kirkland_Manholes-198	52.1	112.6	2.29	8	Concrete	0.013	821	4	26	30	3.7	SM14-Ex-EX43	
Kirkland_Main-420	Kirkland_Manholes-2310	256	Kirkland_Manholes-2738	255.5	66.4	0.75	8	PVC	0.01	612	8	26	33	5.5		
Kirkland_Main-421	Kirkland_Manholes-2738	255.5	Kirkland_Manholes-2752	253.8	209.4	0.81	8	PVC	0.01	635	9	30	39	6.1		
Kirkland_Main-422	Kirkland_Manholes-2754	9.95	O-40	9.81	113.1	0.12	18	Ductile Iron	0.012	1,797	506	1,846	2,653	147.7	SM14-Ex-EX10	Drop Connection
Kirkland_Main-423	Kirkland_Manholes-2761	12.79	Kirkland_Manholes-2759	11.56	416.9	0.3	18	PVC	0.01	3,329	505	1,824	2,631	79	SM14-Ex-EX10	
Kirkland_Main-425	Kirkland_Manholes-2759	11.56	Kirkland_Manholes-2758	11.2	391.7	0.09	18	PVC	0.01	1,858	505	1,829	2,635	141.8	SM14-Ex-EX10	
Kirkland_Main-426	Kirkland_Manholes-2758	11.2	Kirkland_Manholes-2757	10.95	117.7	0.21	18	PVC	0.01	2,824	506	1,833	2,640	93.5	SM14-Ex-EX10	
Kirkland_Main-428	Kirkland_Manholes-217	183.22	Kirkland_Manholes-230	172.81	258.2	4.03	8	PVC	0.01	1,416	40	111	151	10.7		
Kirkland_Main-429	Kirkland_Manholes-228	142.32	Kirkland_Manholes-232	112.59	208.3	14.27	8	PVC	0.01	2,663	45	128	173	6.5		
Kirkland_Main-430	Kirkland_Manholes-226	219.39	Kirkland_Manholes-225	214.73	200.7	2.32	8	PVC	0.01	1,074	7	34	41	3.8		
Kirkland_Main-431	Kirkland_Manholes-225	214.73	Kirkland_Manholes-223	193.39	169.1	12.62	8	PVC	0.01	2,505	9	38	47	1.9		
Kirkland_Main-432	Kirkland_Manholes-223	193.39	Kirkland_Manholes-224	189.69	263.2	1.41	8	PVC	0.01	836	18	68	87	10.4		
Kirkland_Main-433	Kirkland_Manholes-222	194.04	Kirkland_Manholes-223	193.39	133.1	0.49	8	PVC	0.01	493	9	26	34	7		
Kirkland_Main-434	Kirkland_Manholes-221	194.75	Kirkland_Manholes-222	194.04	121.4	0.58	8	PVC	0.01	539	8	21	29	5.5		
Kirkland_Main-435	Kirkland_Manholes-219	195.26	Kirkland_Manholes-221	194.75	115.1	0.44	8	PVC	0.01	469	7	17	24	5.2		
Kirkland_Main-436	Kirkland_Manholes-220	211.06	Kirkland_Manholes-219	195.26	185.5	8.52	8	PVC	0.01	2,057	4	9	13	0.6		
Kirkland_Main-437	Kirkland_Manholes-218	197.04	Kirkland_Manholes-219	195.26	182.3	0.98	8	PVC	0.01	697	2	4	6	0.9		
Kirkland_Main-438	Kirkland_Manholes-233	215.48	Kirkland_Manholes-220	211.06	169.3	2.61	8	PVC	0.01	1,139	3	4	7	0.6		
Kirkland_Main-439	Kirkland_Manholes-224	189.69	Kirkland_Manholes-211	186.37	292.8	1.13	8	PVC	0.01	751	19	73	91	12.2		
Kirkland_Main-440	Kirkland_Manholes-266	97.98	Kirkland_Manholes-267	95.34	145	1.82	8	PVC	0.01	951	33	83	116	12.2	SM10	If flow exceeds capacity, overflow MH will be activated; model appropriately.
Kirkland_Main-441	Kirkland_Manholes-265	110.6	Kirkland_Manholes-266	97.98	184.6	6.84	8	Concrete	0.013	1,418	31	79	110	7.8	SM10	
Kirkland_Main-442	Kirkland_Manholes-262	118.9	Kirkland_Manholes-265	110.6	150.8	5.51	8	Concrete	0.013	1,272	30	75	105	8.2	SM10	If flow exceeds capacity, overflow MH will be activated; model appropriately.
Kirkland_Main-443	Kirkland_Manholes-261	130.12	Kirkland_Manholes-262	118.9	278.9	4.02	8	Concrete	0.013	1,088	27	70	98	9	SM10	
Kirkland_Main-444	Kirkland_Manholes-258	141.4	Kirkland_Manholes-261	130.12	280.6	4.02	8	Concrete	0.013	1,087	24	66	90	8.2	SM10	
Kirkland_Main-445	Kirkland_Manholes-527	146.55	Kirkland_Manholes-258	141.4	279.2	1.84	8	Concrete	0.013	737	23	62	84	11.4	SM10	
Kirkland_Main-446	Kirkland_Manholes-259	136.12	Kirkland_Manholes-260	130.49	137.7	4.09	8	sbestos Ceme	0.011	1,296	1	4	6	0.4	SM10	
Kirkland_Main-447	Kirkland_Manholes-260	130.49	Kirkland_Manholes-251	119.87	263.8	4.03	8	sbestos Ceme	0.011	1,286	3	9	11	0.9	SM10	
Kirkland_Main-448	Kirkland_Manholes-251	119.87	Kirkland_Manholes-250	115.74	110.4	3.74	8	sbestos Ceme	0.011	1,239	3	13	16	1.3	SM14-Ex-EX55	
Kirkland_Main-449	Kirkland_Manholes-253	121.6	Kirkland_Manholes-254	100.7	323.7	6.46	8	Concrete	0.013	1,378	31	77	108	7.8	SM14-Ex-EX40	
Kirkland_Main-450	Kirkland_Manholes-252	142.57	Kirkland_Manholes-253	121.6	327.2	6.41	8	Concrete	0.013	1,373	31	73	103	7.5	SM14-Ex-EX40	
Kirkland_Main-451	Kirkland_Manholes-257	165.98	Kirkland_Manholes-252	142.57	284	8.24	8	Concrete	0.013	1,557	30	64	94	6	SM14-Ex-EX57	
Kirkland_Main-452	Kirkland_Manholes-234	184.45	Kirkland_Manholes-257	165.98	280.4	6.59	8	Concrete	0.013	1,392	22	51	73	5.2	SM14-Ex-EX57	
Kirkland_Main-453	Kirkland_Manholes-1133	181.56	Kirkland_Manholes-257	165.98	274.2	5.68	8	Concrete	0.013	1,293	7	9	15	1.2	SM14-Ex-EX58	
Kirkland_Main-454	Kirkland_Manholes-231	144.64	Kirkland_Manholes-236	135.22	190.5	4.95	6	Concrete	0.013	560	1	4	5	1	SM14-Ex-EX56	
Kirkland_Main-455	Kirkland_Manholes-235	144.29	Kirkland_Manholes-236	135.22	77.1	11.76	6	Concrete	0.013	864	1	4	6	0.7	SM14-Ex-EX56	
Kirkland_Main-456	Kirkland_Manholes-236	135.22	Kirkland_Manholes-237	112.26	221.2	10.38	6	Concrete	0.013	811	3	13	16	2	SM14-Ex-EX56	
Kirkland_Main-457	Kirkland_Manholes-232	112.59	Kirkland_Manholes-237	112.26	229.8	0.14	8	Concrete	0.013	206	45	132	177	86.3	SM14-Ex-EX41	
Kirkland_Main-458	Kirkland_Manholes-237	112.26	Kirkland_Manholes-254	100.7	413.4	2.8	8	Concrete	0.013	907	49	149	199	21.9	SM14-Ex-EX41	
Kirkland_Main-459	Kirkland_Manholes-254	100.7	Kirkland_Manholes-255	81.45	344	5.6	8	Concrete	0.013	1,283	81	230	311	24.3	SM14-Ex-EX40	
Kirkland_Main-460	Kirkland_Manholes-249	98.75	Kirkland_Manholes-248	82.01	263.5	6.35	8	Concrete	0.013	1,367	1	4	5	0.4	SM14-Ex-EX39	
Kirkland_Main-461	Kirkland_Manholes-255	81.45	Kirkland_Manholes-256	63.52	326.4	5.49	8	Concrete	0.013	1,271	83	235	317	25	SM14-Ex-EX40	
Kirkland_Main-462	Kirkland_Manholes-256	63.52	Kirkland_Manholes-245	59.23	36.4	11.78	8	Concrete	0.013	1,862	83	239	322	17.3	SM14-Ex-EX40	
Kirkland_Main-463	Kirkland_Manholes-248	82.01	Kirkland_Manholes-245	59.23	346.7	6.57	8	Concrete	0.013	1,390	2	9	10	0.7	SM14-Ex-EX39	
Kirkland_Main-464	Kirkland_Manholes-245	59.23	Kirkland_Manholes-246	59.12	26.8	0.4	8	Concrete	0.013	343	86	252	338	98.4	SM14-Ex-EX40	Drop Connection
Kirkland_Main-465	Kirkland_Manholes-247	65.14	Kirkland_Manholes-246	64.57	142.8	0.4	8	PVC	0.01	446	51	143	194	43.4	SM14-Ex-EX38	Drop Connection
Kirkland_Main-466	Kirkland_Manholes-291	21.49	Kirkland_Manholes-290	19.2	13	17.62	12	PVC	0.01	8,726	44	64	107	1.2	SM10	
Kirkland_Main-467	Kirkland_Manholes-290	19.2	ROSEPT_WETWELL	14.96	16.7	25.32	8	Ductile Iron	0.012	2,957	52	86	138	4.7	SM10	
Kirkland_Main-468	Kirkland_Manholes-289	31.71	Kirkland_Manholes-287	23.53	51	16.05	8	Concrete	0.013	2,173	9	22	32	1.5	SM10	
Kirkland_Main-469	Kirkland_Manholes-288	19.33	Kirkland_Manholes-290	19.2	135.3	0.1	8	Concrete	0.013	168	7	19	26	15.7	SM10	
Kirkland_Main-470	Kirkland_Manholes-287	23.53	Kirkland_Manholes-291	21.49	128.7	1.58	8	Concrete	0.013	683	44	61	104	15.3	SM10	
Kirkland_Main-471	Kirkland_Manholes-286	24.15	Kirkland_Manholes-287	23.53	96.6	0.64	10	Concrete	0.013	788	34	35	70	8.8	SM10	
Kirkland_Main-472	Kirkland_Manholes-285	19.59	Kirkland_Manholes-288	19.33	259.3	0.1	8	Concrete	0.013	172	7	16	23	13.5	SM10	
Kirkland_Main-473	Kirkland_Manholes-292	22.37	Kirkland_Manholes-293	22.09	126.6	0.22	12	Concrete	0.013	744	0	9	9	1.2	SM14-Ex-EX37	
Kirkland_Main-474	Kirkland_Manholes-297	22.86	Kirkland_Manholes-296	21.27	137.3	1.16	8	sbestos Ceme	0.011	690	2	3	5	0.8	SM14-Ex-EX36	
Kirkland_Main-475	Kirkland_Manholes-296	21.27	Kirkland_Manholes-295	20.59	313.5	0.22	8	sbestos Ceme	0.011	299	4	6	10	3.4	SM10	

Existing - Peak Hour Flow - Pipe Capacity Table

Label	Upstream Node	Upstream Invert Elevation (ft)	Downstream Node	Downstream Invert Elevation (ft)	Length (ft)	Slope (%)	Diameter (in)	Material	Manning's n	Design Capacity (gpm)	Domestic Flow (gpm)	I/I Flow (gpm)	Total Flow (gpm)	Percent Full (%)	CIP No.	Notes
Kirkland_Main-476	Kirkland_Manholes-295	20.59	Kirkland_Manholes-294	20.11	95.2	0.5	8	sbestos Ceme	0.011	455	5	10	14	3.1	SM10	
Kirkland_Main-477	Kirkland_Manholes-294	20.11	Kirkland_Manholes-285	19.59	185.3	0.28	8	Concrete	0.013	287	6	13	19	6.5	SM10	
Kirkland_Main-478	Kirkland_Manholes-311	21.29	Kirkland_Manholes-312	20.99	124.6	0.24	12	Concrete	0.013	784	4	35	39	5	SM14-Ex-EX37	
Kirkland_Main-479	Kirkland_Manholes-312	20.99	Kirkland_Manholes-306	19.99	281.9	0.35	12	Concrete	0.013	952	5	44	49	5.2	SM14-Ex-EX37	
Kirkland_Main-480	Kirkland_Manholes-362	216.81	Kirkland_Manholes-361	216.74	35.2	0.2	21	PVC	0.01	4,142	528	1,935	2,463	59.5		
Kirkland_Main-481	Kirkland_Manholes-367	213.02	Kirkland_Manholes-368	212.3	160.3	0.45	18	PVC	0.01	4,107	539	1,999	2,538	61.8		
Kirkland_Main-482	Kirkland_Manholes-368	212.3	Kirkland_Manholes-369	208.86	249.4	1.38	18	PVC	0.01	7,198	539	2,003	2,542	35.3		
Kirkland_Main-483	Kirkland_Manholes-369	208.86	Kirkland_Manholes-370	206.64	246.4	0.9	18	PVC	0.01	5,817	548	2,034	2,583	44.4		
Kirkland_Main-484	Kirkland_Manholes-371	213.58	Kirkland_Manholes-2872	207.03	240.7	2.72	8	PVC	0.01	1,163	0	4	4	0.3		
Kirkland_Main-485	Kirkland_Manholes-372	241.98	Kirkland_Manholes-373	230.9	143.8	7.71	8	PVC	0.01	1,957	0	4	4	0.2		
Kirkland_Main-486	Kirkland_Manholes-375	234.87	Kirkland_Manholes-373	230.9	271	1.46	8	PVC	0.01	853	61	242	303	35.5		
Kirkland_Main-487	Kirkland_Manholes-374	244.09	Kirkland_Manholes-375	234.87	143.4	6.43	8	PVC	0.01	1,788	1	4	4	0.3		
Kirkland_Main-488	Kirkland_Manholes-535	472.49	Kirkland_Manholes-536	466.05	355.6	1.81	8	PVC	0.01	949	2	16	18	1.9		
Kirkland_Main-489	Kirkland_Manholes-536	466.05	Kirkland_Manholes-539	454.38	292.6	3.99	8	PVC	0.01	1,408	4	20	24	1.7		
Kirkland_Main-490	Kirkland_Manholes-537	455.9	Kirkland_Manholes-539	454.38	190.6	0.8	8	PVC	0.01	630	1	4	5	0.8		
Kirkland_Main-491	Kirkland_Manholes-539	454.38	Kirkland_Manholes-540	453.6	170.3	0.46	8	PVC	0.01	477	8	60	67	14.1		
Kirkland_Main-492	Kirkland_Manholes-540	453.6	Kirkland_Manholes-541	450.25	325.9	1.03	8	PVC	0.01	715	8	64	72	10.1		
Kirkland_Main-493	Kirkland_Manholes-538	457.48	Kirkland_Manholes-1977	454.61	403.8	0.71	8	PVC	0.01	594	1	4	5	0.8		
Kirkland_Main-494	Kirkland_Manholes-596	110.91	Kirkland_Manholes-600	91.95	293.8	6.45	8	Concrete	0.013	1,378	89	354	443	32.2	SM14-Ex-EX117	
Kirkland_Main-495	Kirkland_Manholes-598	118.14	Kirkland_Manholes-596	110.91	360.7	2	6	Concrete	0.013	357	3	8	11	3.2	SM14-Ex-EX159	
Kirkland_Main-496	Kirkland_Manholes-606	111.69	Kirkland_Manholes-614	87.89	289.9	8.21	8	Concrete	0.013	1,554	39	165	203	13.1	SM14-Ex-EX96	
Kirkland_Main-497	Kirkland_Manholes-238	85.65	Kirkland_Manholes-239	27.77	394.9	14.66	8	PVC	0.01	2,699	1	4	5	0.2		
Kirkland_Main-502	Kirkland_Manholes-200	55.31	Kirkland_Manholes-199	54.68	46	1.37	8	PVC	0.01	825	4	21	25	3		
Kirkland_Main-503	Kirkland_Manholes-2330	295.18	Kirkland_Manholes-263	292.03	86.5	3.64	8	Concrete	0.013	1,035	29	95	124	12	SM14-Ex-EX252	
Kirkland_Main-504	Kirkland_Manholes-2768	263.56	Kirkland_Manholes-2769	260.32	376.9	0.86	8	PVC	0.01	654	1	4	5	0.8		
Kirkland_Main-505	Kirkland_Manholes-280	27.37	Kirkland_Manholes-286	24.15	372.8	0.86	10	Concrete	0.013	914	32	29	61	6.7	SM10	
Kirkland_Main-509	Kirkland_Manholes-313	62.05	Kirkland_Manholes-286	24.15	229.1	16.54	8	Concrete	0.013	2,206	1	3	5	0.2	SM10	
Kirkland_Main-510	Kirkland_Manholes-804	284.1	Kirkland_Manholes-319	281.98	84.4	2.51	8	PVC	0.01	1,117	8	32	40	3.6		
Kirkland_Main-511	Kirkland_Manholes-319	281.98	Kirkland_Manholes-320	278.6	79.1	4.27	8	PVC	0.01	1,458	9	36	45	3.1		
Kirkland_Main-512	Kirkland_Manholes-320	278.6	Kirkland_Manholes-321	265.74	204.3	6.3	8	PVC	0.01	1,769	10	40	49	2.8		
Kirkland_Main-513	Kirkland_Manholes-321	265.74	Kirkland_Manholes-322	263.88	72.5	2.57	8	PVC	0.01	1,129	10	44	54	4.8		
Kirkland_Main-514	Kirkland_Manholes-322	263.88	Kirkland_Manholes-323	244.99	177.9	10.62	8	PVC	0.01	2,297	20	75	95	4.1		
Kirkland_Main-515	Kirkland_Manholes-803	278.64	Kirkland_Manholes-322	263.88	141.7	10.41	8	PVC	0.01	2,275	9	28	37	1.6		
Kirkland_Main-516	Kirkland_Manholes-323	244.99	Kirkland_Manholes-324	240.21	186.2	2.57	8	PVC	0.01	1,130	20	79	100	8.8		
Kirkland_Main-517	Kirkland_Manholes-815	248.52	Kirkland_Manholes-324	240.21	137.2	6.05	8	PVC	0.01	1,735	6	20	26	1.5		
Kirkland_Main-518	Kirkland_Manholes-324	240.21	Kirkland_Manholes-325	236.62	39.9	9.01	8	PVC	0.01	2,116	27	103	130	6.1		
Kirkland_Main-519	Kirkland_Manholes-325	236.62	Kirkland_Manholes-327	230.43	89	6.95	8	PVC	0.01	1,859	27	111	139	7.5		
Kirkland_Main-520	Kirkland_Manholes-326	238.6	Kirkland_Manholes-325	236.62	142.9	1.39	8	PVC	0.01	830	0	4	4	0.5		
Kirkland_Main-521	Kirkland_Manholes-327	230.43	Kirkland_Manholes-328	228.68	117.4	1.49	8	PVC	0.01	861	28	115	143	16.6		
Kirkland_Main-522	Kirkland_Manholes-328	228.68	Kirkland_Manholes-329	227.48	172.3	0.7	8	PVC	0.01	588	28	119	148	25.1		
Kirkland_Main-523	Kirkland_Manholes-329	227.48	Kirkland_Manholes-814	224.81	265.5	1.01	8	PVC	0.01	707	30	123	153	21.6		
Kirkland_Main-524	Kirkland_Manholes-335	225.11	Kirkland_Manholes-330	224.74	400.7	0.09	21	PVC	0.01	2,809	491	1,713	2,204	78.5	SM14-2021-DF4	
Kirkland_Main-525	Kirkland_Manholes-330	224.74	Kirkland_Manholes-331	223	199.5	0.87	21	PVC	0.01	8,635	492	1,716	2,208	25.6		
Kirkland_Main-526	Kirkland_Manholes-331	223	Kirkland_Manholes-332	219.57	217.5	1.58	21	PVC	0.01	11,610	492	1,720	2,212	19.1		
Kirkland_Main-527	Kirkland_Manholes-332	219.57	Kirkland_Manholes-334	218.68	182	0.49	21	PVC	0.01	6,464	493	1,724	2,217	34.3		
Kirkland_Main-528	Kirkland_Manholes-333	225.59	Kirkland_Manholes-334	218.68	199.5	3.46	8	PVC	0.01	1,312	32	183	215	16.4		
Kirkland_Main-529	Kirkland_Manholes-352	234.2	Kirkland_Manholes-333	225.59	382.7	2.25	8	PVC	0.01	1,058	31	179	210	19.9		
Kirkland_Main-530	Kirkland_Manholes-334	218.68	Kirkland_Manholes-356	218.57	161	0.07	21	PVC	0.01	2,416	527	1,915	2,442	101.1	SM14-Ex-EX48	
Kirkland_Main-531	Kirkland_Manholes-337	291.09	Kirkland_Manholes-338	268.5	343.3	6.58	8	PVC	0.01	1,809	10	64	73	4		
Kirkland_Main-532	Kirkland_Manholes-343	274.46	Kirkland_Manholes-338	268.5	356.6	1.67	8	PVC	0.01	912	1	4	5	0.6		
Kirkland_Main-533	Kirkland_Manholes-338	268.5	Kirkland_Manholes-339	249.19	361.1	5.35	8	PVC	0.01	1,631	13	72	84	5.2		
Kirkland_Main-534	Kirkland_Manholes-1543	289	Kirkland_Manholes-1544	284.46	416.8	1.09	8	Concrete	0.013	566	7	20	27	4.8	SM14-Ex-EX123	
Kirkland_Main-535	Kirkland_Manholes-1545	272.4	Kirkland_Manholes-765	257.59	249.5	5.94	8	Concrete	0.013	1,321	18	68	85	6.4	SM14-Ex-EX121	
Kirkland_Main-536	Kirkland_Manholes-1571	242.76	Kirkland_Manholes-1572	242.19	318.3	0.18	15	PVC	0.01	1,595	191	445	636	39.9		
Kirkland_Main-537	Kirkland_Manholes-1573	242.13	Kirkland_Manholes-1574	241.8	67.8	0.49	15	PVC	0.01	2,630	191	453	644	24.5	SM14-Ex-EX133	
Kirkland_Main-538	Kirkland_Manholes-1572	242.19	Kirkland_Manholes-1573	242.13	243.5	0.02	15	PVC	0.01	592	191	449	640	108.3	SM14-Ex-EX133	
Kirkland_Main-539	Kirkland_Manholes-1576	330.99	Kirkland_Manholes-1575	314.42	250.6	6.61	8	PVC	0.01	1,813	3	28	31	1.7		
Kirkland_Main-540	Kirkland_Manholes-1577	341.43	Kirkland_Manholes-1576	330.99	181.7	5.75	8	PVC	0.01	1,690	3	24	27	1.6		
Kirkland_Main-541	Kirkland_Manholes-1578	344.66	Kirkland_Manholes-1577	341.43	47.3	6.83	8	PVC	0.01	1,843	0	4	4	0.2		
Kirkland_Main-542	Kirkland_Manholes-1579	359.44	Kirkland_Manholes-1580	335.19	206.7	11.73	8	Concrete	0.013	1,858	155	604	759	40.9	SM14-Ex-EX205	
Kirkland_Main-543	Kirkland_Manholes-1580	335.19	Kirkland_Manholes-1581	324.95	171.4	5.98	12	Concrete	0.013	3,909	156	608	764	19.5	SM14-Ex-EX205	
Kirkland_Main-544	Kirkland_Manholes-1582	332.21	Kirkland_Manholes-1581	324.95	160.1	4.53	12	Concrete	0.013	3,405	41	191	232	6.8	SM14-Ex-EX206	

Existing - Peak Hour Flow - Pipe Capacity Table

Label	Upstream Node	Upstream Invert Elevation (ft)	Downstream Node	Downstream Invert Elevation (ft)	Length (ft)	Slope (%)	Diameter (in)	Material	Manning's n	Design Capacity (gpm)	Domestic Flow (gpm)	I/I Flow (gpm)	Total Flow (gpm)	Percent Full (%)	CIP No.	Notes
Kirkland_Main-545	Kirkland_Manholes-1581	324.95	Kirkland_Manholes-1623	294.92	398.1	7.54	12	Concrete	0.013	4,392	197	803	999	22.8	SM14-Ex-EX205	
Kirkland_Main-546	Kirkland_Manholes-2681	334.86	Kirkland_Manholes-3028	332.75	289	0.73	12	Concrete	0.013	1,366	38	171	209	15.3	SM14-Ex-EX206	
Kirkland_Main-547	Kirkland_Manholes-1583	333.82	Kirkland_Manholes-1582	332.21	16.6	9.69	8	PVC	0.01	2,195	2	8	10	0.5		
Kirkland_Main-548	Kirkland_Manholes-1584	346.72	Kirkland_Manholes-1583	333.82	203.1	6.35	8	PVC	0.01	1,777	2	4	6	0.4		
Kirkland_Main-549	Kirkland_Manholes-1575	314.42	Kirkland_Manholes-1953	290.71	326.1	7.27	8	PVC	0.01	1,901	3	32	35	1.8		
Kirkland_Main-550	Kirkland_Manholes-1150	151.79	Kirkland_Manholes-1151	143.36	156.6	5.38	6	Concrete	0.013	584	9	58	67	11.4	SM10	
Kirkland_Main-551	Kirkland_Manholes-1151	143.36	Kirkland_Manholes-1152	135.47	158.3	4.98	6	Concrete	0.013	562	10	66	76	13.5	SM10	
Kirkland_Main-552	Kirkland_Manholes-1170	153.9	Kirkland_Manholes-1150	151.79	249.2	0.85	6	Concrete	0.013	232	2	8	10	4.2	SM10	
Kirkland_Main-553	Kirkland_Manholes-306	19.99	Kirkland_Manholes-1183	19.89	217.6	0.05	12	sbestos Ceme	0.011	405	27	159	186	45.9	SM14-Ex-EX37	
Kirkland_Main-554	Kirkland_Manholes-304	75.98	Kirkland_Manholes-303	75.38	34.2	1.76	8	Concrete	0.013	719	16	62	77	10.8	SM10	
Kirkland_Main-555	Kirkland_Manholes-303	75.38	Kirkland_Manholes-305	74.69	171.5	0.4	8	Concrete	0.013	344	16	71	86	25.1	SM10	
Kirkland_Main-556	Kirkland_Manholes-302	78.72	Kirkland_Manholes-304	75.98	177.4	1.54	8	Concrete	0.013	674	15	53	68	10.1	SM10	
Kirkland_Main-557	Kirkland_Manholes-307	105.6	Kirkland_Manholes-302	78.72	385.1	6.98	8	Concrete	0.013	1,433	14	44	58	4.1	SM10	
Kirkland_Main-558	Kirkland_Manholes-301	74.29	Kirkland_Manholes-300	70.39	326.3	1.2	8	Concrete	0.013	593	2	3	5	0.9	SM10	
Kirkland_Main-559	Kirkland_Manholes-1316	272.4	Kirkland_Manholes-1317	271.64	47	1.62	8	PVC	0.01	896	1	12	13	1.4		
Kirkland_Main-563	Kirkland_Manholes-300	70.39	Kirkland_Manholes-299	66.63	324	1.16	8	Concrete	0.013	584	6	6	12	2	SM10	
Kirkland_Main-564	Kirkland_Manholes-388	297.69	Kirkland_Manholes-389	295.78	310.4	0.62	8	Concrete	0.013	425	8	20	28	6.5	SM14-Ex-EX33	
Kirkland_Main-565	Kirkland_Manholes-390	304.37	Kirkland_Manholes-391	302.9	200.9	0.73	8	Concrete	0.013	464	1	4	5	1.2	SM14-Ex-EX34	
Kirkland_Main-566	Kirkland_Manholes-392	305	Kirkland_Manholes-391	302.9	116.9	1.8	8	Concrete	0.013	727	28	119	147	20.3	SM14-Ex-EX50	
Kirkland_Main-567	Kirkland_Manholes-2568	299.24	Kirkland_Manholes-2592	294.57	199	2.35	8	Concrete	0.013	831	2	4	6	0.7	SM14-Ex-EX306	
Kirkland_Main-568	Kirkland_Manholes-2571	325.07	Kirkland_Manholes-2570	299.81	188.9	13.37	8	PVC	0.01	2,578	1	4	5	0.2		
Kirkland_Main-569	Kirkland_Manholes-2602	234.19	Kirkland_Manholes-2601	228.74	344.4	1.58	8	Concrete	0.013	682	3	12	14	2.1	SM14-Ex-EX300	
Kirkland_Main-570	Kirkland_Manholes-2603	296.02	Kirkland_Manholes-2588	292.14	272.1	1.43	8	Concrete	0.013	648	11	24	34	5.3	SM14-Ex-EX304	
Kirkland_Main-573	Kirkland_Manholes-2610	205.21	Kirkland_Manholes-2609	193.8	79.9	14.28	8	PVC	0.01	2,664	1	4	5	0.2		
Kirkland_Main-574	Kirkland_Manholes-1380	448.63	Kirkland_Manholes-1386	447.82	272.6	0.3	8	Concrete	0.013	296	6	8	14	4.7	SM14-Ex-EX219	
Kirkland_Main-575	Kirkland_Manholes-1383	449.36	Kirkland_Manholes-1380	448.63	231	0.32	8	Concrete	0.013	305	4	4	8	2.5	SM14-Ex-EX219	
Kirkland_Main-576	Kirkland_Manholes-1381	441.1	Kirkland_Manholes-1382	428.64	320.7	3.88	8	PVC	0.01	1,390	0	4	4	0.3		
Kirkland_Main-577	Kirkland_Manholes-1384	452.11	Kirkland_Manholes-1385	450.86	206.1	0.61	8	PVC	0.01	549	1	4	5	0.9		
Kirkland_Main-578	Kirkland_Manholes-1385	450.86	Kirkland_Manholes-1386	447.82	69.1	4.4	8	PVC	0.01	1,479	2	8	10	0.7		
Kirkland_Main-579	Kirkland_Manholes-1386	447.82	Kirkland_Manholes-1387	446.83	200.1	0.49	8	Concrete	0.013	382	8	20	28	7.4	SM14-Ex-EX219	
Kirkland_Main-580	Kirkland_Manholes-1387	446.83	Kirkland_Manholes-1388	445.49	260.4	0.51	8	Ductile Iron	0.012	421	28	95	124	29.3	SM14-Ex-EX219	
Kirkland_Main-581	Kirkland_Manholes-1388	445.49	Kirkland_Manholes-1389	444.08	265.9	0.53	8	Ductile Iron	0.012	428	30	99	129	30.2	SM14-Ex-EX219	
Kirkland_Main-582	Kirkland_Manholes-1390	457.46	Kirkland_Manholes-1389	444.08	260.4	5.14	8	Concrete	0.013	1,229	6	24	29	2.4	SM14-Ex-EX218	
Kirkland_Main-583	Kirkland_Manholes-1389	444.08	Kirkland_Manholes-532	443.04	161.2	0.65	8	Concrete	0.013	436	37	127	164	37.7	SM14-Ex-EX218	
Kirkland_Main-584	Kirkland_Manholes-532	443.04	Kirkland_Manholes-533	442.23	169.5	0.48	8	Concrete	0.013	375	41	131	172	45.8	SM14-Ex-EX218	
Kirkland_Main-585	Kirkland_Manholes-533	442.23	Kirkland_Manholes-534	432.55	269	3.6	8	Concrete	0.013	1,029	42	135	177	17.3	SM14-Ex-EX218	
Kirkland_Main-586	Kirkland_Manholes-530	464.47	Kirkland_Manholes-1390	457.46	207.2	3.38	8	Concrete	0.013	998	5	20	25	2.5	SM14-Ex-EX218	
Kirkland_Main-587	Kirkland_Manholes-1391	471.35	Kirkland_Manholes-530	464.47	201.7	3.41	8	Concrete	0.013	1,002	2	12	14	1.4	SM14-Ex-EX218	
Kirkland_Main-588	Kirkland_Manholes-543	448.24	Kirkland_Manholes-1387	446.83	163.4	0.86	8	PVC	0.01	655	19	72	91	13.9		
Kirkland_Main-589	Kirkland_Manholes-531	468.8	Kirkland_Manholes-530	464.47	218	1.99	8	PVC	0.01	994	1	4	5	0.5		
Kirkland_Main-590	Kirkland_Manholes-339	249.19	Kirkland_Manholes-340	235.81	214	6.25	8	PVC	0.01	1,763	13	75	89	5		
Kirkland_Main-592	Kirkland_Manholes-2009	426.97	Kirkland_Manholes-2010	424.43	206.3	1.23	8	PVC	0.01	782	11	52	63	8		
Kirkland_Main-593	Kirkland_Manholes-2011	417.75	Kirkland_Manholes-2012	406.67	363.8	3.05	8	PVC	0.01	1,230	2	8	10	0.8		
Kirkland_Main-594	Kirkland_Manholes-1989	447.97	Kirkland_Manholes-1990	439.8	245.1	3.33	8	PVC	0.01	1,287	2	8	10	0.8		
Kirkland_Main-595	Kirkland_Manholes-1990	439.8	Kirkland_Manholes-1991	431.18	131.7	6.55	8	PVC	0.01	1,804	5	28	33	1.8		
Kirkland_Main-596	Kirkland_Manholes-556	457.9	Kirkland_Manholes-3007	456.9	222.1	0.45	8	PVC	0.01	473	1	4	5	1		
Kirkland_Main-597	Kirkland_Manholes-2495	184.35	Kirkland_Manholes-2494	170.93	403.6	3.33	8	Concrete	0.013	989	12	20	32	3.2	SM14-Ex-EX236	
Kirkland_Main-598	Kirkland_Manholes-2496	191.57	Kirkland_Manholes-2495	184.35	278.9	2.59	8	Concrete	0.013	873	10	16	26	2.9	SM14-Ex-EX236	
Kirkland_Main-599	Kirkland_Manholes-2497	194.88	Kirkland_Manholes-2498	194.29	45.2	1.3	6	PVC	0.01	374	8	8	16	4.3	SM14-Ex-EX236	
Kirkland_Main-600	Kirkland_Manholes-2498	194.29	Kirkland_Manholes-2496	191.57	77.4	3.51	6	Concrete	0.013	472	9	12	21	4.5	SM14-Ex-EX236	
Kirkland_Main-601	Kirkland_Manholes-2237	143.38	Kirkland_Manholes-2499	140.38	322.1	0.93	8	Concrete	0.013	523	3	6	10	1.8	SM14-Ex-EX225	
Kirkland_Main-602	Kirkland_Manholes-2499	140.38	Kirkland_Manholes-2500	122.66	273.4	6.48	8	Concrete	0.013	1,381	5	12	17	1.3	SM14-Ex-EX225	
Kirkland_Main-603	Kirkland_Manholes-2500	122.66	Kirkland_Manholes-2501	104.86	254.1	7.01	8	Concrete	0.013	1,435	6	18	25	1.7	SM14-Ex-EX225	
Kirkland_Main-604	Kirkland_Manholes-2501	104.86	Kirkland_Manholes-2502	102.46	257.9	0.93	8	Concrete	0.013	523	9	24	33	6.3	SM14-Ex-EX225	
Kirkland_Main-605	Kirkland_Manholes-2502	102.46	Kirkland_Manholes-2503	101.49	223.5	0.43	8	Concrete	0.013	357	13	30	43	12	SM14-Ex-EX225	
Kirkland_Main-606	Kirkland_Manholes-2504	121.59	Kirkland_Manholes-2503	101.49	254	7.91	8	Concrete	0.013	1,526	5	12	17	1.1	SM14-Ex-EX223	
Kirkland_Main-607	Kirkland_Manholes-2503	101.49	Kirkland_Manholes-2507	88.29	256.5	5.15	8	Concrete	0.013	1,230	18	49	67	5.4	SM14-Ex-EX223	
Kirkland_Main-608	Kirkland_Manholes-2505	125.11	Kirkland_Manholes-2504	121.59	387.3	0.91	8	Concrete	0.013	517	2	6	9	1.7	SM14-Ex-EX223	
Kirkland_Main-609	Kirkland_Manholes-2763	13.15	Kirkland_Manholes-2762	13.1	227.4	0.02	18	Ductile Iron	0.012	757	446	1,551	2,298	303.4	SM14-Ex-EX10	
Kirkland_Main-610	Kirkland_Manholes-2238	92.13	Kirkland_Manholes-2118	82.91	342.6	2.69	8	Concrete	0.013	890	4	12	17	1.9	SM14-Ex-EX224	
Kirkland_Main-611	Kirkland_Manholes-2118	82.91	Kirkland_Manholes-2146	75.22	210	3.66	8	Concrete	0.013	1,038	27	79	106	10.2	SM14-Ex-EX223	
Kirkland_Main-612	Kirkland_Manholes-2506	86.22	Kirkland_Manholes-2118	82.91	249.1	1.33	8	Concrete	0.013	625	21	61	81	13	SM14-Ex-EX223	

Existing - Peak Hour Flow - Pipe Capacity Table

Label	Upstream Node	Upstream Invert Elevation (ft)	Downstream Node	Downstream Invert Elevation (ft)	Length (ft)	Slope (%)	Diameter (in)	Material	Manning's n	Design Capacity (gpm)	Domestic Flow (gpm)	I/I Flow (gpm)	Total Flow (gpm)	Percent Full (%)	CIP No.	Notes
Kirkland_Main-613	Kirkland_Manholes-2507	88.29	Kirkland_Manholes-2506	86.22	236.4	0.88	8	Concrete	0.013	507	19	55	74	14.5	SM14-Ex-EX223	
Kirkland_Main-614	Kirkland_Manholes-2508	120.01	Kirkland_Manholes-2510	102.3	301.7	5.87	6	Concrete	0.013	610	4	18	22	3.7	SM14-Ex-EX229	
Kirkland_Main-615	Kirkland_Manholes-2144	65.5	Kirkland_Manholes-2143	61.9	34.5	10.44	8	PVC	0.01	2,279	65	82	148	6.5		
Kirkland_Main-616	Kirkland_Manholes-2145	63.1	Kirkland_Manholes-2143	61.9	31.4	3.82	8	PVC	0.01	1,377	4	49	54	3.9		
Kirkland_Main-618	Kirkland_Manholes-2170	148.68	Kirkland_Manholes-2169	142.85	119.8	4.87	6	PVC	0.01	722	1	8	9	1.2	SM14-Ex-EX193	
Kirkland_Main-622	Kirkland_Manholes-2167	120.69	Kirkland_Manholes-2166	108.92	118.4	9.94	6	Concrete	0.013	794	3	33	35	4.5	SM14-Ex-EX193	
Kirkland_Main-623	Kirkland_Manholes-2166	108.92	Kirkland_Manholes-2165	94.99	230.8	6.04	6	Concrete	0.013	619	6	41	47	7.6	SM14-Ex-EX193	
Kirkland_Main-626	Kirkland_Manholes-2719	31.99	Kirkland_Manholes-2715	29.78	252.5	0.88	8	PVC	0.01	660	74	12	86	13		
Kirkland_Main-627	Kirkland_Manholes-2278	406.74	Kirkland_Manholes-2271	405.49	96	1.3	8	PVC	0.01	805	2	16	18	2.2		
Kirkland_Main-630	Kirkland_Manholes-2407	403.31	Kirkland_Manholes-2268	401.9	163.6	0.86	8	Concrete	0.013	503	11	48	59	11.6	SM14-Ex-EX261	
Kirkland_Main-631	Kirkland_Manholes-2266	392.8	Kirkland_Manholes-2265	392	110.1	0.73	8	Concrete	0.013	462	21	123	144	31.2	SM14-Ex-EX212	
Kirkland_Main-632	Kirkland_Manholes-2265	392	Kirkland_Manholes-2263	374.13	447.5	3.99	8	Concrete	0.013	1,084	21	127	148	13.7	SM14-Ex-EX212	
Kirkland_Main-633	Kirkland_Manholes-2245	234.09	Kirkland_Manholes-2074	213.49	327.6	6.29	8	Concrete	0.013	1,360	43	48	91	6.7	SM14-Ex-EX246	
Kirkland_Main-634	Kirkland_Manholes-2253	239.74	Kirkland_Manholes-2252	236.86	193.1	1.49	8	Concrete	0.013	662	31	12	43	6.4	SM14-Ex-EX247	
Kirkland_Main-635	Kirkland_Manholes-2252	236.86	Kirkland_Manholes-2245	234.09	241.6	1.15	8	Concrete	0.013	581	35	16	51	8.8	SM14-Ex-EX247	
Kirkland_Main-636	Kirkland_Manholes-2246	246.17	Kirkland_Manholes-2245	234.09	185.5	6.51	8	Concrete	0.013	1,384	6	24	30	2.1	SM14-Ex-EX246	
Kirkland_Main-637	Kirkland_Manholes-2247	249.9	Kirkland_Manholes-2246	246.17	310.7	1.2	8	Concrete	0.013	594	4	20	24	4.1	SM14-Ex-EX246	
Kirkland_Main-638	Kirkland_Manholes-2251	257.04	Kirkland_Manholes-2247	249.9	237.7	3	8	Concrete	0.013	940	0	4	4	0.4	SM14-Ex-EX246	
Kirkland_Main-639	Kirkland_Manholes-2248	259.41	Kirkland_Manholes-2247	249.9	197.8	4.81	8	PVC	0.01	1,546	3	12	15	1		
Kirkland_Main-640	Kirkland_Manholes-2249	263.29	Kirkland_Manholes-2248	259.41	137.3	2.82	8	PVC	0.01	1,185	3	8	11	1		
Kirkland_Main-641	Kirkland_Manholes-2250	275.69	Kirkland_Manholes-2249	263.29	113.4	10.94	8	PVC	0.01	2,332	3	4	7	0.3		
Kirkland_Main-642	Kirkland_Manholes-2261	305.59	Kirkland_Manholes-2260	285.07	409.2	5.01	8	Concrete	0.013	1,214	237	850	1,087	89.5	SM14-Ex-EX248	
Kirkland_Main-643	Kirkland_Manholes-2262	311.78	Kirkland_Manholes-2261	305.59	133.8	4.62	8	Concrete	0.013	1,166	234	846	1,081	92.6	SM14-Ex-EX248	
Kirkland_Main-644	Kirkland_Manholes-21	62.08	Kirkland_Manholes-101	61.95	7	1.85	8	PVC	0.01	960	7	30	37	3.8		
Kirkland_Main-645	Kirkland_Manholes-3038	279.17	Kirkland_Manholes-3039	278.83	84.7	0.4	8	PVC	0.01	446	1	4	5	1.2		
Kirkland_Main-646	Kirkland_Manholes-3039	278.83	Kirkland_Manholes-3035	266.43	233.8	5.3	8	PVC	0.01	1,624	3	8	11	0.7		
Kirkland_Main-647	Kirkland_Manholes-3037	277.97	Kirkland_Manholes-3036	268.75	180.1	5.12	8	PVC	0.01	1,595	1	4	5	0.3		
Kirkland_Main-648	Kirkland_Manholes-3036	268.75	Kirkland_Manholes-3035	266.43	62.1	3.74	8	PVC	0.01	1,363	2	8	10	0.7		
Kirkland_Main-649	Kirkland_Manholes-1505	267	Kirkland_Manholes-3035	266.43	67.6	0.84	8	PVC	0.01	647	22	87	110	16.9		
Kirkland_Main-650	Kirkland_Manholes-3040	208.06	Kirkland_Manholes-3041	198.95	98.1	9.29	8	PVC	0.01	2,148	6	4	10	0.4		
Kirkland_Main-651	Kirkland_Manholes-3041	198.95	Kirkland_Manholes-1602	196.74	179.4	1.23	8	PVC	0.01	782	7	8	15	2		
Kirkland_Main-652	Kirkland_Manholes-3100	18.3	Kirkland_Manholes-3044	18.06	60.9	0.39	18	Concrete	0.013	2,959	88	67	155	5.2	SM14-Ex-EX289	
Kirkland_Main-653	Kirkland_Manholes-566	483.97	Kirkland_Manholes-3045	483.35	154.3	0.4	8	PVC	0.01	446	1	4	5	1.1		
Kirkland_Main-655	Kirkland_Manholes-3046	250.83	Kirkland_Manholes-3047	250.39	298.9	0.15	8	PVC	0.01	271	1	4	5	1.9		
Kirkland_Main-656	Kirkland_Manholes-3047	250.39	Kirkland_Manholes-396	249.55	18.8	4.48	8	PVC	0.01	1,492	2	8	10	0.7		
Kirkland_Main-657	Kirkland_Manholes-3048	215.92	Kirkland_Manholes-364	215.51	48.9	0.84	21	PVC	0.01	8,463	535	1,967	2,502	29.6		
Kirkland_Main-658	Kirkland_Manholes-3051	246.2	Kirkland_Manholes-3050	235.83	120.9	8.58	8	PVC	0.01	2,065	0	4	4	0.2		
Kirkland_Main-659	Kirkland_Manholes-3050	235.83	Kirkland_Manholes-3049	221.64	223.5	6.35	8	PVC	0.01	1,776	1	8	9	0.5		
Kirkland_Main-660	Kirkland_Manholes-3049	221.64	Kirkland_Manholes-3048	215.92	33.6	17.02	8	PVC	0.01	2,909	2	12	13	0.5		
Kirkland_Main-661	Kirkland_Manholes-3054	230.52	Kirkland_Manholes-3053	227.56	179.1	1.65	8	PVC	0.01	906	2	4	6	0.6		
Kirkland_Main-662	Kirkland_Manholes-3052	228.3	Kirkland_Manholes-3053	227.56	79.8	0.93	8	PVC	0.01	679	0	4	4	0.6		
Kirkland_Main-663	Kirkland_Manholes-3053	227.56	Kirkland_Manholes-3055	218.26	198.6	4.68	8	PVC	0.01	1,526	3	12	14	0.9		
Kirkland_Main-664	Kirkland_Manholes-3055	218.26	Kirkland_Manholes-364	215.51	19.7	13.95	8	PVC	0.01	2,634	3	16	18	0.7		
Kirkland_Main-665	Kirkland_Manholes-3058	393.03	Kirkland_Manholes-3057	384.71	254	3.28	8	PVC	0.01	1,276	1	4	5	0.4		
Kirkland_Main-666	Kirkland_Manholes-3057	384.71	Kirkland_Manholes-3056	382.54	53.8	4.03	8	PVC	0.01	1,415	2	8	9	0.7		
Kirkland_Main-667	Kirkland_Manholes-3056	382.54	Kirkland_Manholes-3016	372.66	250.2	3.95	8	PVC	0.01	1,401	2	12	14	1		
Kirkland_Main-668	Kirkland_Manholes-3062	383.23	Kirkland_Manholes-3063	372.82	282.2	3.69	8	PVC	0.01	1,354	0	4	4	0.3		
Kirkland_Main-669	Kirkland_Manholes-3063	372.82	Kirkland_Manholes-3061	361.76	319.4	3.46	8	PVC	0.01	1,312	0	8	8	0.6		
Kirkland_Main-670	Kirkland_Manholes-3061	361.76	Kirkland_Manholes-3060	360.51	136.8	0.91	8	PVC	0.01	674	0	12	12	1.8		
Kirkland_Main-671	Kirkland_Manholes-3059	374.97	Kirkland_Manholes-3060	371.3	316.1	1.16	8	PVC	0.01	760	0	4	4	0.6		Drop Connection
Kirkland_Main-672	Kirkland_Manholes-3060	360.51	Kirkland_Manholes-3064	358.68	232.8	0.79	8	PVC	0.01	625	2	20	22	3.5		
Kirkland_Main-673	Kirkland_Manholes-3064	358.68	Kirkland_Manholes-3065	358.3	94.6	0.4	8	PVC	0.01	446	2	24	26	5.8		
Kirkland_Main-674	Kirkland_Manholes-3065	358.3	Kirkland_Manholes-3066	356.12	87.4	2.49	8	PVC	0.01	1,113	3	28	31	2.8		
Kirkland_Main-675	Kirkland_Manholes-3066	356.12	Kirkland_Manholes-3067	344.94	288.6	3.87	8	PVC	0.01	1,388	5	32	37	2.7		
Kirkland_Main-676	Kirkland_Manholes-3067	344.94	Kirkland_Manholes-3068	332.11	210.6	6.09	8	PVC	0.01	1,740	5	36	41	2.4		
Kirkland_Main-677	Kirkland_Manholes-3068	332.11	Kirkland_Manholes-3069	304.52	266.1	10.37	8	PVC	0.01	2,270	6	40	45	2		
Kirkland_Main-678	Kirkland_Manholes-3069	304.52	Kirkland_Manholes-926	302.74	43.6	4.09	8	PVC	0.01	1,425	6	44	50	3.5		
Kirkland_Main-679	Kirkland_Manholes-299	66.63	Kirkland_Manholes-298	56.65	96.2	10.37	8	Concrete	0.013	1,747	9	16	25	1.4	SM10	
Kirkland_Main-680	Kirkland_Manholes-298	56.65	Kirkland_Manholes-289	31.71	154.4	16.15	8	Concrete	0.013	2,180	9	19	28	1.3	SM10	
Kirkland_Main-681	Kirkland_Manholes-281	36.84	Kirkland_Manholes-280	27.37	236.3	4.01	8	PVC	0.01	1,411	1	13	14	1	SM10	
Kirkland_Main-682	Kirkland_Manholes-752	265.45	Kirkland_Manholes-1559	253.89	158.5	7.29	8	Concrete	0.013	1,465	20	60	80	5.5	SM14-Ex-EX68	
Kirkland_Main-683	Kirkland_Manholes-1561	229.17	Kirkland_Manholes-1562	206.57	130	17.39	8	PVC	0.01	2,940	1	4	5	0.2		

Existing - Peak Hour Flow - Pipe Capacity Table

Label	Upstream Node	Upstream Invert Elevation (ft)	Downstream Node	Downstream Invert Elevation (ft)	Length (ft)	Slope (%)	Diameter (in)	Material	Manning's n	Design Capacity (gpm)	Domestic Flow (gpm)	I/I Flow (gpm)	Total Flow (gpm)	Percent Full (%)	CIP No.	Notes
Kirkland_Main-684	Kirkland_Manholes-1563	203.28	Kirkland_Manholes-1564	164.37	189.8	20.5	8	PVC	0.01	3,192	1	12	13	0.4		
Kirkland_Main-685	Kirkland_Manholes-1347	427.05	Kirkland_Manholes-1349	426.8	216.3	0.12	8	PVC	0.01	240	2	16	18	7.6		
Kirkland_Main-686	Kirkland_Manholes-1349	426.8	Kirkland_Manholes-1348	423.36	47.3	7.28	8	PVC	0.01	1,902	3	20	23	1.2		
Kirkland_Main-687	Kirkland_Manholes-1348	423.36	Kirkland_Manholes-1354	421.4	318.8	0.61	8	PVC	0.01	553	3	24	27	4.9		
Kirkland_Main-688	Kirkland_Manholes-1352	406.36	Kirkland_Manholes-1903	399.77	227.2	2.9	8	PVC	0.01	1,201	1	4	5	0.4		
Kirkland_Main-689	Kirkland_Manholes-1353	422.52	Kirkland_Manholes-1354	421.4	133.4	0.84	8	PVC	0.01	646	2	4	6	0.9		
Kirkland_Main-690	Kirkland_Manholes-1354	421.4	Kirkland_Manholes-1355	420.81	87.2	0.68	8	PVC	0.01	580	5	32	37	6.4		
Kirkland_Main-691	Kirkland_Manholes-832	339.26	Kirkland_Manholes-794	336.64	92.4	2.84	8	PVC	0.01	1,188	2	12	14	1.2		
Kirkland_Main-692	Kirkland_Manholes-794	336.64	Kirkland_Manholes-795	330.76	102.1	5.76	8	PVC	0.01	1,692	3	16	19	1.1		
Kirkland_Main-693	Kirkland_Manholes-795	330.76	Kirkland_Manholes-796	329.52	188.4	0.66	8	PVC	0.01	572	4	20	23	4.1		
Kirkland_Main-694	Kirkland_Manholes-833	205	Kirkland_Manholes-830	198.45	115.6	5.67	8	PVC	0.01	1,678	1	4	5	0.3		
Kirkland_Main-695	Kirkland_Manholes-1212	307.51	Kirkland_Manholes-1213	300.54	162.4	4.29	6	Concrete	0.013	522	60	20	79	15.2		
Kirkland_Main-696	Kirkland_Manholes-1213	300.54	Kirkland_Manholes-2616	274.02	226.7	11.7	6	Concrete	0.013	861	60	24	83	9.7		
Kirkland_Main-697	Kirkland_Manholes-515	18.45	Kirkland_Manholes-514	18.19	122.3	0.21	12	sbestos Ceme	0.011	866	30	203	233	26.9	SM14-Ex-EX37	
Kirkland_Main-698	Kirkland_Manholes-1186	18.89	Kirkland_Manholes-515	18.45	232.7	0.19	12	sbestos Ceme	0.011	825	30	195	224	27.2	SM14-Ex-EX37	
Kirkland_Main-699	Kirkland_Manholes-1185	19.29	Kirkland_Manholes-1186	18.89	267.9	0.15	12	sbestos Ceme	0.011	730	29	186	214	29.4	SM14-Ex-EX37	
Kirkland_Main-700	Kirkland_Manholes-2510	102.3	Kirkland_Manholes-2511	85.9	155.2	10.57	6	Concrete	0.013	819	6	24	30	3.7	SM14-Ex-EX229	
Kirkland_Main-701	Kirkland_Manholes-2512	90.74	Kirkland_Manholes-2511	85.9	110.5	4.38	6	Vitrified Clay	0.013	527	2	12	14	2.7	SM14-Ex-EX228	
Kirkland_Main-703	Kirkland_Manholes-2513	104.61	Kirkland_Manholes-2512	90.74	161.7	8.58	6	PVC	0.01	959	2	6	8	0.8	SM14-Ex-EX228	
Kirkland_Main-704	Kirkland_Manholes-1988	449.74	Kirkland_Manholes-1989	447.97	257	0.69	8	PVC	0.01	585	1	4	5	0.9		
Kirkland_Main-705	Kirkland_Manholes-2008	435.7	Kirkland_Manholes-1993	435.41	162.8	0.18	8	PVC	0.01	298	5	16	21	7		
Kirkland_Main-706	Kirkland_Manholes-2060	437.6	Kirkland_Manholes-2008	435.7	259.6	0.73	8	PVC	0.01	603	2	4	6	1.1		
Kirkland_Main-707	Kirkland_Manholes-1993	435.41	Kirkland_Manholes-2061	434.9	121.2	0.42	8	PVC	0.01	457	5	20	25	5.5		
Kirkland_Main-708	Kirkland_Manholes-2061	434.9	Kirkland_Manholes-1994	434.42	35	1.37	8	PVC	0.01	826	6	24	29	3.6		
Kirkland_Main-709	Kirkland_Manholes-1994	434.42	Kirkland_Manholes-1995	433.71	121.9	0.58	8	PVC	0.01	538	6	28	34	6.2		
Kirkland_Main-710	Kirkland_Manholes-1995	433.71	Kirkland_Manholes-1996	432.86	110.9	0.77	8	PVC	0.01	617	7	36	43	7		
Kirkland_Main-711	Kirkland_Manholes-1996	432.86	Kirkland_Manholes-1997	432.14	299.5	0.24	8	PVC	0.01	346	8	40	47	13.7		
Kirkland_Main-712	Kirkland_Manholes-1998	432.54	Kirkland_Manholes-1997	432.14	196.8	0.2	8	Vitrified Clay	0.013	245	1	4	5	2.1	SM14-Ex-EX211	
Kirkland_Main-713	Kirkland_Manholes-1997	432.14	Kirkland_Manholes-1999	430.91	331.2	0.37	8	Concrete	0.013	331	11	48	58	17.6	SM14-Ex-EX211	
Kirkland_Main-714	Kirkland_Manholes-2062	435.63	Kirkland_Manholes-1995	433.71	265.8	0.72	8	PVC	0.01	599	1	4	5	0.9		
Kirkland_Main-717	Kirkland_Manholes-2063	422.68	Kirkland_Manholes-2671	399.75	265	8.65	8	Concrete	0.013	1,595	12	72	84	5.2	SM14-Ex-EX209	
Kirkland_Main-718	Kirkland_Manholes-2066	434.49	Kirkland_Manholes-2059	433	119.7	1.24	8	Concrete	0.013	605	0	4	4	0.7	SM14-Ex-EX213	
Kirkland_Main-719	Kirkland_Manholes-2698	186.34	Kirkland_Manholes-2068	163.08	368.4	6.31	8	Concrete	0.013	1,363	13	60	73	5.3	SM14-Ex-EX198	
Kirkland_Main-720	Kirkland_Manholes-2073	208.76	Kirkland_Manholes-2072	202.36	249.4	2.57	8	Vitrified Clay	0.013	869	2	4	6	0.7	SM14-Ex-EX200	
Kirkland_Main-721	Kirkland_Manholes-2072	202.36	Kirkland_Manholes-2071	194.98	377.1	1.96	8	Vitrified Clay	0.013	759	5	8	13	1.7	SM14-Ex-EX200	
Kirkland_Main-722	Kirkland_Manholes-2071	194.98	Kirkland_Manholes-2070	185.96	391.2	2.31	8	Vitrified Clay	0.013	824	8	12	20	2.5	SM14-Ex-EX200	
Kirkland_Main-723	Kirkland_Manholes-2070	185.96	Kirkland_Manholes-2069	170.43	333.6	4.65	8	Vitrified Clay	0.013	1,170	11	20	31	2.6	SM14-Ex-EX200	
Kirkland_Main-724	Kirkland_Manholes-2082	247.37	Kirkland_Manholes-2083	246.89	120.8	0.4	8	PVC	0.01	447	0	4	4	0.9		
Kirkland_Main-725	Kirkland_Manholes-2083	246.89	Kirkland_Manholes-658	246.8	21.8	0.4	8	PVC	0.01	446	1	8	8	1.9		
Kirkland_Main-727	Kirkland_Manholes-2077	125.7	Kirkland_Manholes-2078	109.29	215.7	7.61	6	Concrete	0.013	695	3	25	28	4	SM14-Ex-EX195	
Kirkland_Main-728	Kirkland_Manholes-2076	138.89	Kirkland_Manholes-2077	125.7	187.9	7.02	6	Concrete	0.013	667	2	16	18	2.8	SM14-Ex-EX195	
Kirkland_Main-729	Kirkland_Manholes-2075	153.92	Kirkland_Manholes-2076	138.89	219.4	6.85	6	Concrete	0.013	659	1	8	9	1.4	SM14-Ex-EX195	
Kirkland_Main-731	Kirkland_Manholes-574	110.98	Kirkland_Manholes-595	103.44	159.1	4.74	6	Concrete	0.013	548	3	16	19	3.5	SM14-Ex-EX116	
Kirkland_Main-736	Kirkland_Manholes-1656	125.68	Kirkland_Manholes-1655	123.15	42	6.03	8	PVC	0.01	1,731	8	8	16	0.9		
Kirkland_Main-737	Kirkland_Manholes-1655	123.15	Kirkland_Manholes-1657	121.13	91.5	2.21	8	PVC	0.01	1,048	8	16	24	2.3		
Kirkland_Main-738	Kirkland_Manholes-1658	125.68	Kirkland_Manholes-1657	125.55	31.5	0.4	8	PVC	0.01	446	2	8	11	2.4		Drop Connection
Kirkland_Main-739	Kirkland_Manholes-1657	121.13	Kirkland_Manholes-1659	116.52	191.7	2.41	8	PVC	0.01	1,093	10	33	43	3.9		
Kirkland_Main-740	Kirkland_Manholes-1659	116.52	Kirkland_Manholes-1660	110.77	122.6	4.69	8	PVC	0.01	1,527	26	41	67	4.4		
Kirkland_Main-741	Kirkland_Manholes-1660	110.77	Kirkland_Manholes-1662	100.46	127.6	8.08	8	PVC	0.01	2,004	26	49	75	3.8		
Kirkland_Main-742	Kirkland_Manholes-1663	103.65	Kirkland_Manholes-1661	102.19	55.6	2.62	8	PVC	0.01	1,142	2	16	18	1.6		
Kirkland_Main-743	Kirkland_Manholes-1661	102.19	Kirkland_Manholes-1662	100.46	11.1	15.62	8	PVC	0.01	2,786	2	25	27	1		
Kirkland_Main-744	Kirkland_Manholes-1662	100.46	Kirkland_Manholes-1665	94.21	177.6	3.52	8	PVC	0.01	1,322	28	82	110	8.3		
Kirkland_Main-745	Kirkland_Manholes-1664	108.5	Kirkland_Manholes-1663	103.65	57.4	8.45	8	Ductile Iron	0.012	1,707	2	8	10	0.6	SM14-Ex-EX169	
Kirkland_Main-746	Kirkland_Manholes-1667	101.23	Kirkland_Manholes-1666	89.71	215.8	5.34	8	PVC	0.01	1,629	13	41	54	3.3		
Kirkland_Main-747	Kirkland_Manholes-1668	119.52	Kirkland_Manholes-1667	101.23	220.6	8.29	8	PVC	0.01	2,030	8	25	33	1.6		
Kirkland_Main-748	Kirkland_Manholes-1295	119.7	Kirkland_Manholes-572	113.73	319.3	1.87	8	Concrete	0.013	742	79	321	400	54	SM14-Ex-EX117	
Kirkland_Main-749	Kirkland_Manholes-1256	151.53	Kirkland_Manholes-1284	145.84	256.4	2.22	6	Concrete	0.013	375	18	115	134	35.6	SM14-Ex-EX108	
Kirkland_Main-750	Kirkland_Manholes-1283	147.65	Kirkland_Manholes-1284	145.84	53.9	3.36	6	Concrete	0.013	461	4	16	20	4.4	SM14-Ex-EX108	
Kirkland_Main-751	Kirkland_Manholes-1282	154.9	Kirkland_Manholes-1283	147.65	295.8	2.45	6	Concrete	0.013	394	2	8	10	2.5	SM14-Ex-EX108	
Kirkland_Main-753	Kirkland_Manholes-1284	145.84	Kirkland_Manholes-1287	140.18	314.1	1.8	6	Concrete	0.013	338	24	140	164	48.5	SM14-Ex-EX105	
Kirkland_Main-755	Kirkland_Manholes-1285	150.78	Kirkland_Manholes-1286	147.03	125.8	2.98	6	Concrete	0.013	435	1	8	9	2.1	SM14-Ex-EX109	
Kirkland_Main-756	Kirkland_Manholes-1286	147.03	Kirkland_Manholes-1287	140.18	192.2	3.56	6	Concrete	0.013	475	3	16	20	4.1	SM14-Ex-EX109	

Existing - Peak Hour Flow - Pipe Capacity Table

Label	Upstream Node	Upstream Invert Elevation (ft)	Downstream Node	Downstream Invert Elevation (ft)	Length (ft)	Slope (%)	Diameter (in)	Material	Manning's n	Design Capacity (gpm)	Domestic Flow (gpm)	I/I Flow (gpm)	Total Flow (gpm)	Percent Full (%)	CIP No.	Notes
Kirkland_Main-757	Kirkland_Manholes-1289	131.61	Kirkland_Manholes-1290	127.52	235.4	1.74	6	Concrete	0.013	332	35	181	216	65	SM14-Ex-EX105	
Kirkland_Main-758	Kirkland_Manholes-1290	127.52	Kirkland_Manholes-576	111.2	318.6	5.12	8	Concrete	0.013	1,227	46	255	301	24.6	SM14-Ex-EX105	
Kirkland_Main-759	Kirkland_Manholes-1291	137.27	Kirkland_Manholes-1290	127.52	280.9	3.47	8	Concrete	0.013	1,010	10	66	76	7.5	SM14-Ex-EX111	
Kirkland_Main-760	Kirkland_Manholes-1261	144.57	Kirkland_Manholes-1291	137.27	276	2.64	8	Concrete	0.013	882	8	58	65	7.4	SM14-Ex-EX111	
Kirkland_Main-761	Kirkland_Manholes-1227	174.57	Kirkland_Manholes-584	159.38	158.7	9.57	8	Concrete	0.013	1,678	25	91	116	6.9	SM14-Ex-EX96	
Kirkland_Main-762	Kirkland_Manholes-1238	263.26	Kirkland_Manholes-1298	253.38	261	3.78	8	Concrete	0.013	1,055	3	16	20	1.9	SM14-Ex-EX64	
Kirkland_Main-763	Kirkland_Manholes-1298	253.38	Kirkland_Manholes-1245	243.41	258.4	3.86	8	Concrete	0.013	1,065	6	25	31	2.9	SM14-Ex-EX64	
Kirkland_Main-765	Kirkland_Manholes-1302	252.61	Kirkland_Manholes-1301	241.1	158.8	7.25	8	Concrete	0.013	1,460	2	8	10	0.7	SM14-Ex-EX98	
Kirkland_Main-766	Kirkland_Manholes-1230	236.32	Kirkland_Manholes-1229	218.73	349.5	5.03	6	Concrete	0.013	565	17	58	74	13.1	SM14-Ex-EX96	
Kirkland_Main-767	Kirkland_Manholes-1229	218.73	Kirkland_Manholes-1228	189.87	369	7.82	6	Concrete	0.013	704	20	66	86	12.2	SM14-Ex-EX96	
Kirkland_Main-768	Kirkland_Manholes-727	84.25	Kirkland_Manholes-728	70.86	152.9	8.76	8	Concrete	0.013	1,605	112	535	648	40.3	SM14-Ex-EX117	
Kirkland_Main-769	Kirkland_Manholes-1407	474.89	Kirkland_Manholes-1406	473.57	319.1	0.41	8	PVC	0.01	453	25	28	53	11.7		
Kirkland_Main-770	Kirkland_Manholes-1415	475.19	Kirkland_Manholes-1406	473.57	245.1	0.66	8	PVC	0.01	573	30	44	73	12.8		
Kirkland_Main-771	Kirkland_Manholes-1408	476.13	Kirkland_Manholes-1407	474.89	287.1	0.43	8	PVC	0.01	463	4	24	27	5.9		
Kirkland_Main-772	Kirkland_Manholes-1409	479.33	Kirkland_Manholes-1408	476.13	271.9	1.18	8	PVC	0.01	765	4	20	23	3.1		
Kirkland_Main-773	Kirkland_Manholes-1410	479.58	Kirkland_Manholes-1409	479.33	219	0.11	8	PVC	0.01	238	3	16	19	8.1		
Kirkland_Main-774	Kirkland_Manholes-1411	480.36	Kirkland_Manholes-1410	479.58	194.5	0.4	8	PVC	0.01	445	3	12	15	3.4		
Kirkland_Main-775	Kirkland_Manholes-1412	483.98	Kirkland_Manholes-1411	480.36	100.6	3.6	8	PVC	0.01	1,338	3	4	7	0.5		
Kirkland_Main-776	Kirkland_Manholes-1853	276.11	Kirkland_Manholes-1851	275	191.4	0.58	8	PVC	0.01	537	1	4	5	0.9		
Kirkland_Main-777	Kirkland_Manholes-1772	68.31	Kirkland_Manholes-2929	66.75	69.5	2.25	12	Concrete	0.013	2,396	118	478	596	24.9	SM14-Ex-EX166	
Kirkland_Main-778	Kirkland_Manholes-2929	66.75	Kirkland_Manholes-729	64.46	261.6	0.88	12	Concrete	0.013	1,497	118	486	604	40.4	SM14-Ex-EX166	
Kirkland_Main-780	Kirkland_Manholes-1413	481	Kirkland_Manholes-1411	480.36	161.4	0.4	8	PVC	0.01	446	0	4	4	1		
Kirkland_Main-781	Kirkland_Manholes-1418	477.42	Kirkland_Manholes-1414	476.69	182.7	0.4	8	PVC	0.01	446	1	16	16	3.7		
Kirkland_Main-782	Kirkland_Manholes-2078	109.29	Kirkland_Manholes-2079	101.7	225.4	3.37	6	Concrete	0.013	462	4	33	36	7.9	SM14-Ex-EX195	
Kirkland_Main-783	Kirkland_Manholes-2079	101.7	Kirkland_Manholes-2080	100.3	24.2	5.79	8	PVC	0.01	1,697	5	41	46	2.7		
Kirkland_Main-784	Kirkland_Manholes-2129	162.62	Kirkland_Manholes-2130	161.57	13	8.1	12	Ductile Iron	0.012	4,930	0	8	8	0.2	SM14-Ex-EX235	
Kirkland_Main-785	Kirkland_Manholes-2128	162.8	Kirkland_Manholes-2129	162.62	31	0.58	12	PVC	0.01	1,584	0	4	4	0.3		
Kirkland_Main-786	Kirkland_Manholes-2127	166.38	Kirkland_Manholes-2130	161.57	81	5.94	8	Concrete	0.013	1,322	20	8	28	2.1	SM14-Ex-EX235	
Kirkland_Main-787	Kirkland_Manholes-2131	158.3	O-32	156.08	22.1	10.06	12	Ductile Iron	0.012	5,494	571	1,514	2,085	37.9	SM14-Ex-EX236	
Kirkland_Main-788	Kirkland_Manholes-2139	96.6	Kirkland_Manholes-2138	94.8	32.5	5.54	8	PVC	0.01	1,659	5	25	29	1.8		
Kirkland_Main-789	Kirkland_Manholes-2154	28.66	Kirkland_Manholes-2153	28.2	11.2	4.1	8	Concrete	0.013	1,098	3	39	42	3.8	SM14-Ex-EX220	
Kirkland_Main-790	Kirkland_Manholes-2153	28.2	Kirkland_Manholes-2152	27.32	8.5	10.4	8	Concrete	0.013	1,749	3	45	49	2.8	SM14-Ex-EX220	
Kirkland_Main-791	Kirkland_Manholes-2152	27.32	Kirkland_Manholes-2320	18	38.7	24.05	8	PVC	0.01	3,458	3	52	55	1.6		
Kirkland_Main-792	Kirkland_Manholes-2151	49.81	Kirkland_Manholes-2154	28.66	303.9	6.96	8	Concrete	0.013	1,431	3	32	36	2.5	SM14-Ex-EX220	
Kirkland_Main-793	Kirkland_Manholes-2150	50.98	Kirkland_Manholes-2151	49.81	135.2	0.87	8	Concrete	0.013	505	2	26	28	5.5	SM14-Ex-EX220	
Kirkland_Main-794	Kirkland_Manholes-2149	76.26	Kirkland_Manholes-2150	50.98	227.7	11.1	8	Concrete	0.013	1,807	1	19	20	1.1	SM14-Ex-EX220	
Kirkland_Main-795	Kirkland_Manholes-2148	77.03	Kirkland_Manholes-2149	76.26	100.5	0.77	8	Concrete	0.013	475	0	13	13	2.7	SM14-Ex-EX220	
Kirkland_Main-796	Kirkland_Manholes-2147	92.38	Kirkland_Manholes-2148	77.03	204.1	7.52	8	Concrete	0.013	1,488	0	6	6	0.4	SM14-Ex-EX220	
Kirkland_Main-800	Kirkland_Manholes-2158	102.11	Kirkland_Manholes-2157	100.18	271.7	0.71	8	PVC	0.01	594	2	6	9	1.5		
Kirkland_Main-801	Kirkland_Manholes-2160	86.23	Kirkland_Manholes-2159	84.71	220.9	0.69	8	PVC	0.01	585	1	6	8	1.3		
Kirkland_Main-802	Kirkland_Manholes-2157	100.18	Kirkland_Manholes-2159	84.71	251.5	6.15	8	PVC	0.01	1,749	14	52	66	3.8		
Kirkland_Main-804	Kirkland_Manholes-2134	124.65	Kirkland_Manholes-2135	110	281.7	5.2	8	Concrete	0.013	1,237	5	26	31	2.5	SM14-Ex-EX221	
Kirkland_Main-805	Kirkland_Manholes-2133	139	Kirkland_Manholes-2134	124.65	362.7	3.96	8	Concrete	0.013	1,079	3	19	22	2	SM14-Ex-EX221	
Kirkland_Main-806	Kirkland_Manholes-2132	159.52	Kirkland_Manholes-2131	158.3	73.8	1.65	8	Concrete	0.013	697	567	1,510	2,077	297.8	SM14-Ex-EX236	
Kirkland_Main-807	Kirkland_Manholes-2126	177.6	Kirkland_Manholes-2127	166.38	202.1	5.55	8	Concrete	0.013	1,278	20	4	24	1.9	SM14-Ex-EX235	
Kirkland_Main-808	Kirkland_Manholes-2125	177.39	Kirkland_Manholes-2132	159.52	237.1	7.54	12	PVC	0.01	5,707	551	1,482	2,033	35.6		
Kirkland_Main-809	Kirkland_Manholes-2304	192.91	Kirkland_Manholes-2125	177.39	277.3	5.6	12	PVC	0.01	4,918	551	1,478	2,029	41.3		
Kirkland_Main-810	Kirkland_Manholes-2136	110.1	Kirkland_Manholes-2137	107.9	254.4	0.86	10	PVC	0.01	1,189	1	8	9	0.8		
Kirkland_Main-811	Kirkland_Manholes-2137	107.9	Kirkland_Manholes-2080	100.3	293.2	2.59	10	PVC	0.01	2,058	6	16	22	1.1		
Kirkland_Main-812	Kirkland_Manholes-2080	100.3	Kirkland_Manholes-2138	94.8	252.5	2.18	10	PVC	0.01	1,887	11	66	76	4		
Kirkland_Main-813	Kirkland_Manholes-2138	94.8	Kirkland_Manholes-2140	88.47	239.3	2.65	10	PVC	0.01	2,079	15	99	114	5.5		
Kirkland_Main-814	Kirkland_Manholes-2140	88.47	Kirkland_Manholes-2141	73.53	356.2	4.19	10	PVC	0.01	2,618	24	165	188	7.2		
Kirkland_Main-815	Kirkland_Manholes-2141	73.53	Kirkland_Manholes-2142	68.99	196.1	2.31	10	PVC	0.01	1,945	48	214	262	13.5		
Kirkland_Main-816	Kirkland_Manholes-2142	68.99	Kirkland_Manholes-2143	61.9	284.3	2.49	10	PVC	0.01	2,019	54	288	342	17		
Kirkland_Main-817	Kirkland_Manholes-2876	267.92	Kirkland_Manholes-2877	259.41	173	4.92	8	PVC	0.01	1,564	4	20	24	1.5		
Kirkland_Main-818	Kirkland_Manholes-2877	259.41	Kirkland_Manholes-625	258	37.7	3.74	8	PVC	0.01	1,364	5	24	28	2.1		
Kirkland_Main-819	Kirkland_Manholes-2878	269.8	Kirkland_Manholes-2876	267.92	58	3.24	8	PVC	0.01	1,269	2	8	10	0.8		
Kirkland_Main-820	Kirkland_Manholes-2882	274.26	Kirkland_Manholes-2878	269.8	141	3.16	8	PVC	0.01	1,254	1	4	5	0.4		
Kirkland_Main-821	Kirkland_Manholes-1801	112.29	Kirkland_Manholes-1802	95.68	270.4	6.14	8	Concrete	0.013	1,344	58	253	311	23.1	SM4	
Kirkland_Main-822	Kirkland_Manholes-1803	87.57	Kirkland_Manholes-1401	76.78	133.9	8.06	6	Concrete	0.013	715	1	8	9	1.3	SM14-Ex-EX141	
Kirkland_Main-823	Kirkland_Manholes-1804	103.12	Kirkland_Manholes-1403	89.74	129.7	10.32	6	Concrete	0.013	809	1	8	9	1.2	SM14-Ex-EX140	
Kirkland_Main-826	Kirkland_Manholes-1807	44.26	Kirkland_Manholes-1806	38.89	57.7	9.3	8	PVC	0.01	2,150	84	303	386	18	SM4	

Existing - Peak Hour Flow - Pipe Capacity Table

Label	Upstream Node	Upstream Invert Elevation (ft)	Downstream Node	Downstream Invert Elevation (ft)	Length (ft)	Slope (%)	Diameter (in)	Material	Manning's n	Design Capacity (gpm)	Domestic Flow (gpm)	I/I Flow (gpm)	Total Flow (gpm)	Percent Full (%)	CIP No.	Notes
Kirkland_Main-827	Kirkland_Manholes-589	126.06	Kirkland_Manholes-590	118.3	332.1	2.34	6	Concrete	0.013	385	3	8	11	2.8	SM14-Ex-EX158	
Kirkland_Main-828	Kirkland_Manholes-1802	95.68	Kirkland_Manholes-1810	85.96	289.7	3.35	8	Concrete	0.013	993	64	278	342	34.4	SM4	
Kirkland_Main-829	Kirkland_Manholes-1833	16.5	Kirkland_Manholes-1793	15.37	141.1	0.8	8	PVC	0.01	631	2	13	15	2.4		
Kirkland_Main-830	Kirkland_Manholes-1836	11	Kirkland_Manholes-1791	8.2	291.3	0.96	15	PVC	0.01	3,695	390	890	1,279	34.6		
Kirkland_Main-832	Kirkland_Manholes-1850	19.39	Kirkland_Manholes-1849	16.69	373.2	0.72	8	Concrete	0.013	461	4	13	17	3.7	SM10	
Kirkland_Main-833	Kirkland_Manholes-1849	16.69	Kirkland_Manholes-1847	16.59	254.1	0.04	8	Concrete	0.013	108	5	19	24	22.7	SM10	
Kirkland_Main-834	Kirkland_Manholes-1847	16.59	Kirkland_Manholes-1846	15.1	93.2	1.6	12	PVC	0.01	2,628	5	26	31	1.2	SM10	
Kirkland_Main-835	Kirkland_Manholes-2633	278.44	Kirkland_Manholes-2632	276.84	129.7	1.23	8	Concrete	0.013	602	3	8	11	1.8	SM14-Ex-EX295	
Kirkland_Main-837	Kirkland_Manholes-2605	280.73	Kirkland_Manholes-2633	278.44	217.9	1.05	8	Concrete	0.013	556	2	4	6	1.1	SM14-Ex-EX295	
Kirkland_Main-838	Kirkland_Manholes-2634	286.56	Kirkland_Manholes-2635	275.48	268.8	4.12	8	Concrete	0.013	1,101	3	4	7	0.6	SM14-Ex-EX294	
Kirkland_Main-839	Kirkland_Manholes-2635	275.48	Kirkland_Manholes-2636	245.46	401.2	7.48	8	Concrete	0.013	1,484	5	12	17	1.1	SM14-Ex-EX294	
Kirkland_Main-840	Kirkland_Manholes-2636	245.46	Kirkland_Manholes-2637	187.87	397.8	14.48	8	Concrete	0.013	2,064	6	16	22	1.1	SM14-Ex-EX294	
Kirkland_Main-841	Kirkland_Manholes-2640	93.15	Kirkland_Manholes-2641	88.89	86.7	4.91	8	PVC	0.01	1,563	5	18	23	1.5		
Kirkland_Main-842	Kirkland_Manholes-2639	115.66	Kirkland_Manholes-2640	93.15	98.6	22.84	8	PVC	0.01	3,369	4	12	16	0.5		
Kirkland_Main-843	Kirkland_Manholes-2638	117.25	Kirkland_Manholes-2639	115.66	47.5	3.35	8	PVC	0.01	1,290	2	6	8	0.6		
Kirkland_Main-844	Kirkland_Manholes-2643	117.26	Kirkland_Manholes-2642	102.55	182.7	8.05	8	PVC	0.01	2,001	1	6	7	0.4		
Kirkland_Main-848	Kirkland_Manholes-2645	79.04	Kirkland_Manholes-2644	74.88	115.7	3.59	8	PVC	0.01	1,337	7	36	44	3.3		
Kirkland_Main-850	Kirkland_Manholes-1481	462.54	Kirkland_Manholes-1482	457.77	84.3	5.66	8	Concrete	0.013	1,290	4	20	24	1.8	SM14-Ex-EX268	
Kirkland_Main-851	Kirkland_Manholes-1495	496.81	Kirkland_Manholes-1484	495.36	362.4	0.4	8	PVC	0.01	446	1	4	5	1.1		
Kirkland_Main-852	Kirkland_Manholes-1484	495.36	Kirkland_Manholes-1485	486.98	151.8	5.52	8	PVC	0.01	1,657	4	32	36	2.2		
Kirkland_Main-853	Kirkland_Manholes-1485	486.98	Kirkland_Manholes-1486	483.92	112.4	2.72	8	PVC	0.01	1,163	11	48	59	5.1		
Kirkland_Main-854	Kirkland_Manholes-1486	483.92	Kirkland_Manholes-1488	482.18	104.3	1.67	8	PVC	0.01	910	13	52	65	7.1		
Kirkland_Main-855	Kirkland_Manholes-1488	482.18	Kirkland_Manholes-1489	480.6	353.4	0.45	8	PVC	0.01	471	16	60	76	16.1		
Kirkland_Main-856	Kirkland_Manholes-1487	483.25	Kirkland_Manholes-1488	482.18	163.9	0.65	8	PVC	0.01	570	2	4	6	1		
Kirkland_Main-857	Kirkland_Manholes-1489	480.6	Kirkland_Manholes-2029	479.06	117.8	1.31	8	PVC	0.01	806	18	64	81	10.1		
Kirkland_Main-858	Kirkland_Manholes-1490	499.13	Kirkland_Manholes-1492	491.87	290.5	2.5	8	PVC	0.01	1,115	2	4	6	0.6		
Kirkland_Main-859	Kirkland_Manholes-1492	491.87	Kirkland_Manholes-1491	489.53	101	2.32	8	PVC	0.01	1,073	4	8	12	1.1		
Kirkland_Main-860	Kirkland_Manholes-1491	489.53	Kirkland_Manholes-1485	486.98	404.5	0.63	8	PVC	0.01	560	6	12	17	3.1		
Kirkland_Main-861	Kirkland_Manholes-1493	479.91	Kirkland_Manholes-2025	477	402.9	0.72	8	PVC	0.01	599	6	8	13	2.2		
Kirkland_Main-862	Kirkland_Manholes-1494	496.1	Kirkland_Manholes-1484	495.36	68.3	1.08	8	PVC	0.01	734	3	24	27	3.7		
Kirkland_Main-865	Kirkland_Manholes-2234	145.49	Kirkland_Manholes-2235	140.92	280.9	1.63	6	PVC	0.01	418	3	6	9	2.2	SM14-Ex-EX221	
Kirkland_Main-866	Kirkland_Manholes-2235	140.92	Kirkland_Manholes-2133	139	112.7	1.7	6	PVC	0.01	427	3	13	16	3.7	SM14-Ex-EX221	
Kirkland_Main-867	Kirkland_Manholes-2236	23.9	Kirkland_Manholes-2230	23.3	57.5	1.04	8	PVC	0.01	720	0	6	6	0.9		
Kirkland_Main-868	Kirkland_Manholes-2702	256.62	Kirkland_Manholes-1633	254.8	313.1	0.58	8	Concrete	0.013	414	6	12	17	4.2	SM14-Ex-EX204	
Kirkland_Main-869	Kirkland_Manholes-1634	223.49	Kirkland_Manholes-1635	192.35	312.2	9.97	8	Concrete	0.013	1,713	216	842	1,059	61.8	SM7	
Kirkland_Main-870	Kirkland_Manholes-1635	192.35	Kirkland_Manholes-1638	164.94	265.5	10.33	8	Concrete	0.013	1,743	218	846	1,065	61.1	SM7	
Kirkland_Main-871	Kirkland_Manholes-1636	172.84	Kirkland_Manholes-1637	170.82	135.8	1.49	8	PVC	0.01	860	1	4	5	0.6		
Kirkland_Main-872	Kirkland_Manholes-1637	170.82	Kirkland_Manholes-1639	169.94	172.1	0.51	8	PVC	0.01	504	2	8	10	1.9		
Kirkland_Main-873	Kirkland_Manholes-1639	169.94	Kirkland_Manholes-1638	164.94	235.7	2.12	8	Concrete	0.013	790	16	95	111	14.1	SM14-Ex-EX202	
Kirkland_Main-874	Kirkland_Manholes-1638	164.94	Kirkland_Manholes-1642	158.76	65.1	9.49	8	Concrete	0.013	1,671	234	946	1,180	70.6	SM7	
Kirkland_Main-875	Kirkland_Manholes-1641	205.91	Kirkland_Manholes-1640	188.59	221.5	7.82	6	PVC	0.01	915	2	4	6	0.7	SM14-Ex-EX203	
Kirkland_Main-877	Kirkland_Manholes-1643	156.25	Kirkland_Manholes-1648	152.03	150	2.81	8	Concrete	0.013	910	1	8	9	1	SM14-Ex-EX196	
Kirkland_Main-878	Kirkland_Manholes-1644	159.14	O-25	154.59	17.5	26	8	PVC	0.01	3,595	17	56	72	2		
Kirkland_Main-879	Kirkland_Manholes-1645	171.46	Kirkland_Manholes-1644	159.14	257.8	4.78	8	PVC	0.01	1,541	16	52	68	4.4		
Kirkland_Main-880	Kirkland_Manholes-1625	179.1	Kirkland_Manholes-1645	171.46	179.3	4.26	8	PVC	0.01	1,455	10	48	58	4		
Kirkland_Main-881	Kirkland_Manholes-1647	165.32	O-24	163.59	78.9	2.18	8	Concrete	0.013	801	0	4	4	0.5	SM14-Ex-EX175	
Kirkland_Main-882	Kirkland_Manholes-1676	98.96	Kirkland_Manholes-1677	88.12	84.8	12.79	8	PVC	0.01	2,521	21	33	54	2.1		
Kirkland_Main-883	Kirkland_Manholes-1678	99.76	Kirkland_Manholes-1676	98.96	128.1	0.62	8	PVC	0.01	557	18	16	34	6.1		
Kirkland_Main-884	Kirkland_Manholes-1679	107.21	Kirkland_Manholes-1678	99.76	181.8	4.1	8	PVC	0.01	1,427	18	8	26	1.8		
Kirkland_Main-885	Kirkland_Manholes-1683	75.33	Kirkland_Manholes-1682	74.03	148.9	0.87	8	PVC	0.01	659	3	16	19	2.9		
Kirkland_Main-886	Kirkland_Manholes-1682	74.03	Kirkland_Manholes-1681	72.36	31.7	5.27	8	PVC	0.01	1,619	3	25	27	1.7		
Kirkland_Main-887	Kirkland_Manholes-602	90.22	Kirkland_Manholes-1680	83.64	138.4	4.75	8	Concrete	0.013	1,182	84	399	483	40.9	SM5	
Kirkland_Main-888	Kirkland_Manholes-1680	83.64	Kirkland_Manholes-1681	72.36	151.4	7.45	8	Concrete	0.013	1,480	85	408	493	33.3	SM5	
Kirkland_Main-889	Kirkland_Manholes-600	91.95	Kirkland_Manholes-1687	86.12	197.8	2.95	8	Concrete	0.013	931	95	379	473	50.8	SM14-Ex-EX117	
Kirkland_Main-890	Kirkland_Manholes-1788	86.3	Kirkland_Manholes-727	84.25	363.6	0.56	8	Concrete	0.013	407	12	132	143	35.2	SM14-Ex-EX167	
Kirkland_Main-891	Kirkland_Manholes-1686	60.42	Kirkland_Manholes-1685	57.24	38.9	8.17	8	PVC	0.01	2,016	0	8	8	0.4		
Kirkland_Main-892	Kirkland_Manholes-1681	72.36	Kirkland_Manholes-1685	57.24	220.4	6.86	8	Concrete	0.013	1,420	88	440	528	37.2	SM5	
Kirkland_Main-893	Kirkland_Manholes-1687	86.12	Kirkland_Manholes-727	84.25	76.5	2.45	8	Concrete	0.013	848	101	395	496	58.5	SM14-Ex-EX117	
Kirkland_Main-894	Kirkland_Manholes-1688	86.4	Kirkland_Manholes-1687	86.26	34.9	0.4	8	PVC	0.01	446	6	8	14	3.2		Drop Connection
Kirkland_Main-895	Kirkland_Manholes-621	70.36	Kirkland_Manholes-618	51.3	271.9	7.01	8	Concrete	0.013	1,436	35	29	64	4.5	SM14-Ex-EX161	
Kirkland_Main-896	Kirkland_Manholes-617	67.92	Kirkland_Manholes-618	51.3	164.3	10.11	8	Concrete	0.013	1,725	6	16	22	1.3	SM14-Ex-EX162	
Kirkland_Main-897	Kirkland_Manholes-1690	47.42	Kirkland_Manholes-1689	43.75	38.1	9.62	6	PVC	0.01	1,015	3	16	19	1.9	SM14-Ex-EX163	

Existing - Peak Hour Flow - Pipe Capacity Table

Label	Upstream Node	Upstream Invert Elevation (ft)	Downstream Node	Downstream Invert Elevation (ft)	Length (ft)	Slope (%)	Diameter (in)	Material	Manning's n	Design Capacity (gpm)	Domestic Flow (gpm)	I/I Flow (gpm)	Total Flow (gpm)	Percent Full (%)	CIP No.	Notes
Kirkland_Main-898	Kirkland_Manholes-2864	27	SOUTHBAY_WETWELL	22	7.5	67.05	6	PVC	0.01	2,681	13	24	37	1.4	SM14-Ex-EX314	WW Influent Pipe
Kirkland_Main-900	Kirkland_Manholes-1691	49.07	Kirkland_Manholes-1690	47.42	170.4	0.97	6	PVC	0.01	322	2	8	10	3.2	SM14-Ex-EX163	
Kirkland_Main-901	Kirkland_Manholes-618	51.3	Kirkland_Manholes-619	48.43	55.8	5.15	8	Concrete	0.013	1,231	41	54	95	7.7	SM14-Ex-EX161	
Kirkland_Main-902	Kirkland_Manholes-619	48.43	Kirkland_Manholes-1689	43.75	128.1	3.65	8	Concrete	0.013	1,036	42	78	120	11.6	SM14-Ex-EX161	
Kirkland_Main-903	Kirkland_Manholes-1693	36.33	Kirkland_Manholes-1692	35.9	53.8	0.8	8	PVC	0.01	630	3	8	12	1.9		
Kirkland_Main-905	Kirkland_Manholes-1809	70.83	Kirkland_Manholes-1703	58	295.2	4.35	6	Concrete	0.013	525	1	8	10	1.8	SM14-Ex-EX153	
Kirkland_Main-910	Kirkland_Manholes-1707	126.28	Kirkland_Manholes-1706	124.78	10	14.96	12	Concrete	0.013	6,185	15	115	130	2.1	SM14-Ex-EX196	
Kirkland_Main-911	Kirkland_Manholes-1710	134.24	Kirkland_Manholes-1709	133.97	34.7	0.78	10	Concrete	0.013	867	12	82	94	10.9	SM14-Ex-EX196	
Kirkland_Main-912	Kirkland_Manholes-1708	148.34	Kirkland_Manholes-1709	133.97	305.2	4.71	12	Concrete	0.013	3,470	2	16	18	0.5	SM14-Ex-EX197	
Kirkland_Main-913	Kirkland_Manholes-1709	133.97	Kirkland_Manholes-1707	126.28	136.1	5.65	12	Concrete	0.013	3,801	14	107	121	3.2	SM14-Ex-EX196	
Kirkland_Main-914	Kirkland_Manholes-2281	374.95	Kirkland_Manholes-2263	374.13	166.2	0.49	8	Concrete	0.013	381	0	4	4	1	SM14-Ex-EX212	
Kirkland_Main-915	Kirkland_Manholes-2283	405.87	Kirkland_Manholes-2282	401.71	113.4	3.67	8	PVC	0.01	1,350	5	20	25	1.8		
Kirkland_Main-916	Kirkland_Manholes-2295	415.45	Kirkland_Manholes-2294	370.88	306.7	14.53	8	PVC	0.01	2,688	2	8	10	0.4		
Kirkland_Main-917	Kirkland_Manholes-2294	370.88	Kirkland_Manholes-2293	362.58	254.1	3.27	8	PVC	0.01	1,274	3	12	15	1.2		
Kirkland_Main-918	Kirkland_Manholes-2298	374.75	Kirkland_Manholes-2297	358.91	231	6.86	8	Concrete	0.013	1,420	4	12	16	1.1	SM14-Ex-EX210	
Kirkland_Main-919	Kirkland_Manholes-2297	358.91	Kirkland_Manholes-2296	354.23	230.5	2.03	8	Concrete	0.013	773	5	16	21	2.8	SM14-Ex-EX210	
Kirkland_Main-920	Kirkland_Manholes-2772	308.23	O-3	307.9	81.9	0.4	8	PVC	0.01	446	29	91	119	26.8		Drop Connection
Kirkland_Main-921	Kirkland_Manholes-2293	362.58	Kirkland_Manholes-2296	354.23	294.7	2.83	8	PVC	0.01	1,187	9	32	41	3.4		
Kirkland_Main-922	Kirkland_Manholes-2299	342.7	Kirkland_Manholes-2300	337.19	153.2	3.6	8	Concrete	0.013	1,029	15	56	71	6.9	SM14-Ex-EX206	
Kirkland_Main-923	Kirkland_Manholes-2296	354.23	Kirkland_Manholes-2299	342.7	146.7	7.86	8	Concrete	0.013	1,520	15	52	66	4.4	SM14-Ex-EX206	
Kirkland_Main-924	Kirkland_Manholes-2264	383.3	Kirkland_Manholes-2263	374.13	85.7	10.7	8	Concrete	0.013	1,774	210	707	918	51.7	SM14-Ex-EX248	
Kirkland_Main-925	Kirkland_Manholes-2432	257.14	Kirkland_Manholes-2312	256.91	169.1	0.14	8	PVC	0.01	260	1	4	6	2.2		
Kirkland_Main-926	Kirkland_Manholes-2312	256.91	Kirkland_Manholes-2311	256.52	196.4	0.2	8	PVC	0.01	314	2	9	11	3.4		
Kirkland_Main-927	Kirkland_Manholes-2282	401.71	Kirkland_Manholes-2264	383.3	409.8	4.49	8	Concrete	0.013	1,150	210	703	914	79.5	SM14-Ex-EX248	
Kirkland_Main-928	Kirkland_Manholes-2288	423.18	Kirkland_Manholes-2286	420.26	97.3	3	8	PVC	0.01	1,221	2	8	10	0.8		
Kirkland_Main-929	Kirkland_Manholes-2289	426.62	Kirkland_Manholes-2288	423.18	150.1	2.29	8	PVC	0.01	1,067	1	4	5	0.5		
Kirkland_Main-930	Kirkland_Manholes-2286	420.26	Kirkland_Manholes-2287	418.83	164.5	0.87	8	PVC	0.01	657	4	12	15	2.3		
Kirkland_Main-931	Kirkland_Manholes-2287	418.83	Kirkland_Manholes-2283	405.87	87.5	14.81	8	PVC	0.01	2,714	5	16	21	0.8		
Kirkland_Main-932	Kirkland_Manholes-1585	238.49	Kirkland_Manholes-1586	212.55	318.9	8.13	8	Concrete	0.013	1,547	1	4	5	0.3	SM14-Ex-EX173	
Kirkland_Main-933	Kirkland_Manholes-1586	212.55	Kirkland_Manholes-1587	210.95	268.2	0.6	8	Concrete	0.013	419	2	8	10	2.5	SM14-Ex-EX173	
Kirkland_Main-934	Kirkland_Manholes-1589	233.01	Kirkland_Manholes-1587	210.95	318.8	6.92	8	sbestos Ceme	0.011	1,686	59	207	266	15.8	SM14-Ex-EX171	
Kirkland_Main-935	Kirkland_Manholes-1587	210.95	Kirkland_Manholes-1603	202.22	137.6	6.34	8	Concrete	0.013	1,366	64	223	287	21	SM14-Ex-EX172	
Kirkland_Main-936	Kirkland_Manholes-1588	231.21	Kirkland_Manholes-1587	230.56	162.2	0.4	8	Concrete	0.013	343	2	4	6	1.7	SM14-Ex-EX172	Drop Connection
Kirkland_Main-938	Kirkland_Manholes-1590	241.99	Kirkland_Manholes-1589	233.01	173.6	5.17	8	Concrete	0.013	1,233	58	203	261	21.1	SM14-Ex-EX171	
Kirkland_Main-939	Kirkland_Manholes-1591	253.12	Kirkland_Manholes-1590	241.99	399.8	2.78	8	Concrete	0.013	905	56	199	255	28.2	SM14-Ex-EX171	
Kirkland_Main-940	Kirkland_Manholes-1592	255.76	Kirkland_Manholes-1591	253.12	306.5	0.86	8	Concrete	0.013	503	54	195	248	49.4	SM14-Ex-EX124	
Kirkland_Main-942	Kirkland_Manholes-1593	256.67	Kirkland_Manholes-1592	255.76	194.7	0.47	8	Concrete	0.013	371	39	155	194	52.4	SM14-Ex-EX131	
Kirkland_Main-943	Kirkland_Manholes-1594	254.46	Kirkland_Manholes-1595	245.33	353	2.59	8	Concrete	0.013	872	2	4	6	0.7	SM14-Ex-EX130	
Kirkland_Main-944	Kirkland_Manholes-1595	245.33	Kirkland_Manholes-1596	228.98	200	8.17	8	Concrete	0.013	1,551	4	8	12	0.8	SM14-Ex-EX130	
Kirkland_Main-945	Kirkland_Manholes-1596	228.98	Kirkland_Manholes-1597	180.84	398.5	12.08	8	Concrete	0.013	1,885	6	12	18	0.9	SM14-Ex-EX130	
Kirkland_Main-946	Kirkland_Manholes-1601	173.67	Kirkland_Manholes-1598	169.75	176.3	2.22	8	Concrete	0.013	809	54	163	217	26.8	SM14-Ex-EX121	
Kirkland_Main-947	Kirkland_Manholes-1599	200.11	Kirkland_Manholes-1598	169.75	271.2	11.19	8	Concrete	0.013	1,814	3	8	11	0.6	SM14-Ex-EX170	
Kirkland_Main-948	Kirkland_Manholes-379	279.26	Kirkland_Manholes-380	277.21	303.7	0.67	8	PVC	0.01	579	2	8	10	1.8		
Kirkland_Main-949	Kirkland_Manholes-378	285.63	Kirkland_Manholes-379	279.26	366.8	1.74	8	PVC	0.01	929	1	4	5	0.6		
Kirkland_Main-950	Kirkland_Manholes-377	262.82	Kirkland_Manholes-376	239.8	319.8	7.2	8	PVC	0.01	1,892	1	4	5	0.3		
Kirkland_Main-951	Kirkland_Manholes-376	239.8	Kirkland_Manholes-375	234.87	251.6	1.96	8	PVC	0.01	987	58	234	292	29.6		
Kirkland_Main-953	Kirkland_Manholes-382	308.23	Kirkland_Manholes-381	307.41	91.4	0.9	8	PVC	0.01	668	2	8	10	1.6		
Kirkland_Main-954	Kirkland_Manholes-381	307.41	Kirkland_Manholes-383	304.37	123.9	2.45	8	PVC	0.01	1,104	3	12	15	1.3		
Kirkland_Main-955	Kirkland_Manholes-383	304.37	Kirkland_Manholes-384	296.91	253.7	2.94	8	PVC	0.01	1,209	4	16	20	1.6		
Kirkland_Main-956	Kirkland_Manholes-384	296.91	Kirkland_Manholes-424	292.81	99.3	4.13	8	PVC	0.01	1,432	5	20	25	1.7		
Kirkland_Main-957	Kirkland_Manholes-873	311.45	Kirkland_Manholes-385	303.54	299	2.65	8	Concrete	0.013	882	2	4	6	0.7	SM14-Ex-EX33	
Kirkland_Main-958	Kirkland_Manholes-385	303.54	Kirkland_Manholes-387	300.3	93.5	3.46	8	Concrete	0.013	1,009	3	8	11	1.1	SM14-Ex-EX33	
Kirkland_Main-959	Kirkland_Manholes-386	300.85	Kirkland_Manholes-387	300.3	138.6	0.4	8	Concrete	0.013	342	2	4	6	1.8	SM14-Ex-EX33	
Kirkland_Main-960	Kirkland_Manholes-387	300.3	Kirkland_Manholes-388	297.69	129.3	2.02	8	Concrete	0.013	771	6	16	22	2.9	SM14-Ex-EX33	
Kirkland_Main-962	Kirkland_Manholes-2611	254.27	Kirkland_Manholes-2612	250.12	152.9	2.71	6	PVC	0.01	539	3	4	7	1.2	SM14-Ex-EX297	
Kirkland_Main-963	Kirkland_Manholes-1075	291.84	Kirkland_Manholes-1121	289.91	99	1.95	8	PVC	0.01	984	43	131	350	35.5		
Kirkland_Main-964	Kirkland_Manholes-1121	289.91	Kirkland_Manholes-1068	279.38	106.4	9.89	8	PVC	0.01	2,218	44	135	355	16		
Kirkland_Main-966	Kirkland_Manholes-1105	155.49	Kirkland_Manholes-1052	151.4	310	1.32	8	PVC	0.01	810	83	299	382	47.2		
Kirkland_Main-967	Kirkland_Manholes-1108	160.8	Kirkland_Manholes-1105	155.49	333.3	1.59	8	PVC	0.01	890	9	13	22	2.4		
Kirkland_Main-968	Kirkland_Manholes-1104	175.28	Kirkland_Manholes-1106	168.9	388	1.64	18	PVC	0.01	7,859	580	2,118	2,698	34.3		
Kirkland_Main-969	Kirkland_Manholes-1109	162.78	Kirkland_Manholes-1108	160.8	303.1	0.65	8	PVC	0.01	570	1	9	10	1.7		
Kirkland_Main-970	Kirkland_Manholes-1110	163.51	Kirkland_Manholes-1109	162.78	317.4	0.23	8	PVC	0.01	338	1	4	5	1.5		

Existing - Peak Hour Flow - Pipe Capacity Table

Label	Upstream Node	Upstream Invert Elevation (ft)	Downstream Node	Downstream Invert Elevation (ft)	Length (ft)	Slope (%)	Diameter (in)	Material	Manning's n	Design Capacity (gpm)	Domestic Flow (gpm)	I/I Flow (gpm)	Total Flow (gpm)	Percent Full (%)	CIP No.	Notes
Kirkland_Main-972	Kirkland_Manholes-1128	162.57	O-7	162.29	71	0.4	20	Concrete	0.013	3,948	280	695	1,151	29.2	SM14-Ex-EX4	
Kirkland_Main-973	Kirkland_Manholes-1127	163.92	Kirkland_Manholes-1128	162.57	132.6	1.02	20	Concrete	0.013	6,300	280	687	1,143	18.1	SM14-Ex-EX4	
Kirkland_Main-974	Kirkland_Manholes-1086	198.2	Kirkland_Manholes-1122	184.29	391.8	3.55	8	PVC	0.01	1,328	10	48	58	4.3		
Kirkland_Main-975	Kirkland_Manholes-1122	184.29	Kirkland_Manholes-1123	182.63	257.7	0.64	20	Concrete	0.013	5,012	184	620	980	19.5	SM14-Ex-EX4	
Kirkland_Main-976	Kirkland_Manholes-1130	185.43	Kirkland_Manholes-1122	185.35	20.3	0.4	8	PVC	0.01	446	173	568	918	205.9	SM14-Ex-EX320	Drop Connection
Kirkland_Main-977	Kirkland_Manholes-1123	182.63	Kirkland_Manholes-1124	177.02	186.2	3.01	20	Concrete	0.013	10,839	190	624	989	9.1	SM14-Ex-EX4	
Kirkland_Main-978	Kirkland_Manholes-1124	177.02	Kirkland_Manholes-1125	167.88	251.4	3.64	20	Concrete	0.013	11,904	248	660	1,083	9.1	SM14-Ex-EX4	
Kirkland_Main-979	Kirkland_Manholes-1125	167.88	Kirkland_Manholes-1126	164.51	134.8	2.5	20	Concrete	0.013	9,873	280	679	1,135	11.5	SM14-Ex-EX4	
Kirkland_Main-980	Kirkland_Manholes-2840	90.84	Kirkland_Manholes-2841	31.53	332.1	17.86	8	Concrete	0.013	2,292	3	12	15	0.7	SM14-Ex-EX310	
Kirkland_Main-981	Kirkland_Manholes-2851	10.8	Kirkland_Manholes-2852	10.72	17.2	0.47	16	Concrete	0.013	2,350	254	784	1,037	44.2	SM14-Ex-EX289	
Kirkland_Main-982	Kirkland_Manholes-2853	25.84	Kirkland_Manholes-2852	10.72	47.1	32.11	8	Concrete	0.013	3,073	0	6	6	0.2	SM14-Ex-EX289	
Kirkland_Main-983	Kirkland_Manholes-2852	10.72	KC_Manholes-18	10.29	84.8	0.51	18	Concrete	0.013	3,357	254	796	1,050	31.3	SM14-Ex-EX289	
Kirkland_Main-984	Kirkland_Manholes-2788	251.6	Kirkland_Manholes-2789	247.4	283.4	1.48	8	Concrete	0.013	660	15	91	106	16.1	SM14-Ex-EX313	
Kirkland_Main-985	Kirkland_Manholes-2789	247.4	Kirkland_Manholes-2790	235.81	170.4	6.8	8	Concrete	0.013	1,415	17	95	112	7.9	SM14-Ex-EX313	
Kirkland_Main-987	Kirkland_Manholes-2790	235.81	Kirkland_Manholes-2791	226.53	127.8	7.26	8	Concrete	0.013	1,462	17	99	117	8	SM14-Ex-EX313	
Kirkland_Main-988	Kirkland_Manholes-2791	226.53	Kirkland_Manholes-2792	199.25	298.7	9.13	8	Concrete	0.013	1,639	19	103	122	7.5	SM14-Ex-EX313	
Kirkland_Main-989	Kirkland_Manholes-2794	201.04	Kirkland_Manholes-2792	199.25	290.5	0.62	8	Concrete	0.013	426	3	8	11	2.5	SM14-Ex-EX312	
Kirkland_Main-991	Kirkland_Manholes-2795	201.42	Kirkland_Manholes-2794	201.04	162	0.23	8	Concrete	0.013	263	1	4	5	2	SM14-Ex-EX312	
Kirkland_Main-992	Kirkland_Manholes-2792	199.25	Kirkland_Manholes-2793	190.95	116.2	7.14	8	Concrete	0.013	1,450	29	115	144	9.9	SM14-Ex-EX313	
Kirkland_Main-993	Kirkland_Manholes-2793	190.95	Kirkland_Manholes-2803	158.22	135.7	24.12	8	Concrete	0.013	2,663	29	119	149	5.6	SM14-Ex-EX313	
Kirkland_Main-994	Kirkland_Manholes-2842	26.9	Kirkland_Manholes-2850	13.3	475.2	2.86	15	Concrete	0.013	4,905	479	1,240	1,790	36.5	SM14-Ex-EX309	
Kirkland_Main-995	Kirkland_Manholes-2850	13.3	KC_Manholes-18	10.29	41.7	7.21	15	Concrete	0.013	7,787	480	1,246	1,798	23.1	SM14-Ex-EX309	
Kirkland_Main-996	Kirkland_Manholes-2856	18.03	Kirkland_Manholes-2845	16.72	134.6	0.98	8	Ductile Iron	0.012	580	11	14	25	4.4	SM14-Ex-EX315	
Kirkland_Main-997	Kirkland_Manholes-2857	19.7	Kirkland_Manholes-2856	18.03	135.5	1.23	8	Ductile Iron	0.012	652	11	9	21	3.2	SM14-Ex-EX315	
Kirkland_Main-998	Kirkland_Manholes-1928	375.97	Kirkland_Manholes-1929	374.67	53.7	2.42	10	Concrete	0.013	1,530	123	536	659	43.1	SM14-Ex-EX205	
Kirkland_Main-999	Kirkland_Manholes-1929	374.67	Kirkland_Manholes-1579	359.44	398.3	3.82	10	Concrete	0.013	1,923	155	600	755	39.3	SM14-Ex-EX205	
Kirkland_Main-1000	Kirkland_Manholes-1930	369.31	Kirkland_Manholes-1931	367.07	97.4	2.3	8	PVC	0.01	1,069	2	8	10	1		
Kirkland_Main-1001	Kirkland_Manholes-1931	367.07	Kirkland_Manholes-1932	360.4	233.1	2.86	8	PVC	0.01	1,193	3	12	15	1.3		
Kirkland_Main-1003	Kirkland_Manholes-1932	360.4	Kirkland_Manholes-1954	357.36	158.2	1.92	8	PVC	0.01	977	4	16	19	2		
Kirkland_Main-1004	Kirkland_Manholes-1935	274.07	Kirkland_Manholes-1881	267.11	156.7	4.44	8	PVC	0.01	1,486	29	83	113	7.6		
Kirkland_Main-1005	Kirkland_Manholes-1951	275.06	Kirkland_Manholes-1935	274.07	209.5	0.47	8	PVC	0.01	485	16	44	60	12.4		
Kirkland_Main-1006	Kirkland_Manholes-1936	301.29	Kirkland_Manholes-1935	274.07	237.6	11.46	8	PVC	0.01	2,387	11	36	47	2		
Kirkland_Main-1007	Kirkland_Manholes-1933	343.68	Kirkland_Manholes-1934	342.88	296	0.27	8	PVC	0.01	367	6	32	38	10.4		
Kirkland_Main-1008	Kirkland_Manholes-1954	357.36	Kirkland_Manholes-1934	342.88	118.8	12.19	8	PVC	0.01	2,462	4	20	24	1		
Kirkland_Main-1009	Kirkland_Manholes-1934	342.88	Kirkland_Manholes-1961	341.24	125.1	1.31	8	PVC	0.01	807	10	56	66	8.2		
Kirkland_Main-1010	Kirkland_Manholes-1938	323.43	Kirkland_Manholes-1936	301.29	243	9.11	8	PVC	0.01	2,128	11	32	42	2		
Kirkland_Main-1011	Kirkland_Manholes-1939	324.34	Kirkland_Manholes-1938	323.43	100	0.91	8	PVC	0.01	673	9	24	33	4.9		
Kirkland_Main-1012	Kirkland_Manholes-1937	332.23	Kirkland_Manholes-1938	323.43	194.4	4.53	8	PVC	0.01	1,500	2	4	6	0.4		
Kirkland_Main-1013	Kirkland_Manholes-1940	363.18	Kirkland_Manholes-1941	361.64	56.6	2.72	8	PVC	0.01	1,163	0	4	4	0.3		
Kirkland_Main-1014	Kirkland_Manholes-391	302.9	Kirkland_Manholes-389	295.78	243.6	2.92	8	Concrete	0.013	927	31	127	158	17	SM14-Ex-EX50	
Kirkland_Main-1015	Kirkland_Manholes-389	295.78	Kirkland_Manholes-393	288.03	97.8	7.93	8	Concrete	0.013	1,527	40	151	191	12.5	SM14-Ex-EX50	
Kirkland_Main-1016	Kirkland_Manholes-393	288.03	Kirkland_Manholes-380	277.21	135.7	7.97	8	Concrete	0.013	1,531	42	159	201	13.1	SM14-Ex-EX50	
Kirkland_Main-1017	Kirkland_Manholes-395	253.88	Kirkland_Manholes-396	249.55	242.3	1.79	8	PVC	0.01	942	51	207	258	27.4		
Kirkland_Main-1018	Kirkland_Manholes-398	254.33	Kirkland_Manholes-397	247.33	147.9	4.73	8	PVC	0.01	1,534	1	4	5	0.3		
Kirkland_Main-1019	Kirkland_Manholes-396	249.55	Kirkland_Manholes-397	247.33	240.2	0.92	8	PVC	0.01	678	54	219	273	40.3		
Kirkland_Main-1020	Kirkland_Manholes-394	266.89	Kirkland_Manholes-395	253.88	150	8.67	8	Concrete	0.013	1,597	49	183	232	14.5	SM14-Ex-EX50	
Kirkland_Main-1021	Kirkland_Manholes-380	277.21	Kirkland_Manholes-394	266.89	136.7	7.55	8	Concrete	0.013	1,490	45	171	216	14.5	SM14-Ex-EX50	
Kirkland_Main-1022	Kirkland_Manholes-898	306.89	Kirkland_Manholes-899	305.17	102.3	1.68	8	PVC	0.01	914	1	8	9	1		
Kirkland_Main-1023	Kirkland_Manholes-899	305.17	Kirkland_Manholes-900	302.97	237.5	0.93	8	PVC	0.01	679	3	12	15	2.2		
Kirkland_Main-1024	Kirkland_Manholes-444	92.89	Kirkland_Manholes-443	91.49	172.9	0.81	8	PVC	0.01	634	4	43	46	7.3		
Kirkland_Main-1025	Kirkland_Manholes-525	156.27	Kirkland_Manholes-526	148.56	279.6	2.76	8	Concrete	0.013	901	4	25	29	3.2	SM10	
Kirkland_Main-1027	Kirkland_Manholes-1198	189.72	Kirkland_Manholes-497	188.11	129.7	1.24	8	Concrete	0.013	604	13	49	62	10.3	SM14-Ex-EX80	
Kirkland_Main-1030	Kirkland_Manholes-520	182.65	Kirkland_Manholes-519	157.09	301.6	8.48	6	Concrete	0.013	733	4	16	20	2.8	SM10	
Kirkland_Main-1031	Kirkland_Manholes-499	185.94	Kirkland_Manholes-523	180.21	279.4	2.05	8	Concrete	0.013	777	19	74	93	12	SM10	
Kirkland_Main-1032	Kirkland_Manholes-523	180.21	Kirkland_Manholes-522	152.47	278.9	9.95	8	Concrete	0.013	1,711	21	82	104	6.1	SM10	
Kirkland_Main-1033	Kirkland_Manholes-522	152.47	Kirkland_Manholes-521	145.96	154.4	4.22	8	Concrete	0.013	1,114	22	91	113	10.1	SM10	
Kirkland_Main-1034	Kirkland_Manholes-521	145.96	Kirkland_Manholes-518	138.7	160.6	4.52	8	Concrete	0.013	1,153	24	99	122	10.6	SM10	
Kirkland_Main-1036	Kirkland_Manholes-518	138.7	Kirkland_Manholes-1179	123.76	316.8	4.72	8	Concrete	0.013	1,178	31	132	163	13.8	SM10	
Kirkland_Main-1037	Kirkland_Manholes-519	157.09	Kirkland_Manholes-518	138.7	337.5	5.45	6	Concrete	0.013	588	7	25	32	5.4	SM10	
Kirkland_Main-1041	Kirkland_Manholes-1235	275.6	Kirkland_Manholes-1233	274.4	201.2	0.6	8	PVC	0.01	545	2	8	10	1.9		
Kirkland_Main-1042	Kirkland_Manholes-1240	250.21	Kirkland_Manholes-1230	236.32	226.8	6.13	6	Concrete	0.013	623	4	8	13	2	SM14-Ex-EX92	
Kirkland_Main-1043	Kirkland_Manholes-1243	249.45	Kirkland_Manholes-1242	244.28	74.2	6.97	8	PVC	0.01	1,862	1	4	5	0.3		

Existing - Peak Hour Flow - Pipe Capacity Table

Label	Upstream Node	Upstream Invert Elevation (ft)	Downstream Node	Downstream Invert Elevation (ft)	Length (ft)	Slope (%)	Diameter (in)	Material	Manning's n	Design Capacity (gpm)	Domestic Flow (gpm)	I/I Flow (gpm)	Total Flow (gpm)	Percent Full (%)	CIP No.	Notes
Kirkland_Main-1044	Kirkland_Manholes-1206	193.92	Kirkland_Manholes-1149	192.13	296.5	0.6	8	Concrete	0.013	421	16	56	71	17	SM14-Ex-EX89	
Kirkland_Main-1049	Kirkland_Manholes-1268	189.24	Kirkland_Manholes-1269	174.05	110.9	13.69	6	Concrete	0.013	932	4	16	20	2.2	SM14-Ex-EX107	
Kirkland_Main-1050	Kirkland_Manholes-1269	174.05	Kirkland_Manholes-1259	154.8	228.2	8.43	6	Concrete	0.013	731	5	25	29	4	SM14-Ex-EX107	
Kirkland_Main-1051	Kirkland_Manholes-1267	201.75	Kirkland_Manholes-1268	189.24	323.1	3.87	6	Concrete	0.013	495	3	8	11	2.3	SM14-Ex-EX107	
Kirkland_Main-1052	Kirkland_Manholes-1265	168.12	Kirkland_Manholes-1262	156.59	138.9	8.3	8	PVC	0.01	2,031	4	25	28	1.4		
Kirkland_Main-1053	Kirkland_Manholes-1497	270.45	Kirkland_Manholes-1499	268.92	211.1	0.72	8	PVC	0.01	600	16	56	72	12		
Kirkland_Main-1054	Kirkland_Manholes-1315	270.9	Kirkland_Manholes-1497	270.45	108.5	0.41	8	PVC	0.01	454	15	52	66	14.6		
Kirkland_Main-1055	Kirkland_Manholes-704	272.37	Kirkland_Manholes-145	271.65	145.7	0.49	8	PVC	0.01	496	12	36	48	9.6		
Kirkland_Main-1057	Kirkland_Manholes-1220	255.3	Kirkland_Manholes-1140	220.91	332.7	10.34	6	Concrete	0.013	810	2	8	10	1.3	SM14-Ex-EX84	
Kirkland_Main-1058	Kirkland_Manholes-1222	248.84	Kirkland_Manholes-1142	218.06	350.4	8.79	6	Concrete	0.013	746	3	8	12	1.6	SM14-Ex-EX85	
Kirkland_Main-1059	Kirkland_Manholes-1140	220.91	Kirkland_Manholes-1142	218.06	314	0.91	6	Concrete	0.013	240	4	16	21	8.7	SM4	
Kirkland_Main-1061	Kirkland_Manholes-1224	232.76	Kirkland_Manholes-500	209.24	344.5	6.83	6	Concrete	0.013	658	2	8	11	1.6	SM14-Ex-EX87	
Kirkland_Main-1062	Kirkland_Manholes-1085	204.43	Kirkland_Manholes-1130	185.43	381.7	4.98	8	PVC	0.01	1,573	152	564	892	56.7		
Kirkland_Main-1063	Kirkland_Manholes-1120	158.13	Kirkland_Manholes-712	157.06	229.6	0.47	8	Concrete	0.013	370	27	11	38	10.4	SM14-Ex-EX1	
Kirkland_Main-1066	Kirkland_Manholes-1512	281.18	Kirkland_Manholes-1513	263.11	227.7	7.94	8	Concrete	0.013	1,528	1	4	5	0.3	SM14-Ex-EX132	
Kirkland_Main-1067	Kirkland_Manholes-1161	78.67	Kirkland_Manholes-1162	78.51	20.6	0.78	15	PVC	0.01	3,326	67	403	470	14.1	SM14-Ex-EX77	
Kirkland_Main-1068	Kirkland_Manholes-1132	188.66	Kirkland_Manholes-1133	181.56	258.9	2.74	8	Concrete	0.013	898	3	4	7	0.8	SM14-Ex-EX58	
Kirkland_Main-1069	Kirkland_Manholes-616	72.16	Kirkland_Manholes-617	67.92	242.5	1.75	6	Concrete	0.013	333	3	8	12	3.5	SM14-Ex-EX162	
Kirkland_Main-1070	Kirkland_Manholes-1699	108.13	Kirkland_Manholes-1700	106.17	216.2	0.91	6	Concrete	0.013	240	0	8	8	3.5	SM14-Ex-EX150	
Kirkland_Main-1071	Kirkland_Manholes-1700	106.17	Kirkland_Manholes-1802	95.68	325.3	3.22	6	Concrete	0.013	452	4	16	20	4.4	SM14-Ex-EX150	
Kirkland_Main-1074	Kirkland_Manholes-1613	87.49	Kirkland_Manholes-1788	86.3	197.1	0.6	8	Concrete	0.013	421	12	123	135	32.1	SM14-Ex-EX167	
Kirkland_Main-1075	Kirkland_Manholes-1793	15.37	Kirkland_Manholes-1794	12.63	22.1	12.39	8	PVC	0.01	2,482	26	19	46	1.8		
Kirkland_Main-1076	Kirkland_Manholes-1795	13.3	Kirkland_Manholes-1794	12.63	41.9	1.6	15	PVC	0.01	4,763	345	753	1,098	23.1		
Kirkland_Main-1077	Kirkland_Manholes-1789	14.67	Kirkland_Manholes-1790	14.6	18.2	0.38	21	PVC	0.01	5,726	339	734	1,073	18.7		
Kirkland_Main-1078	Kirkland_Manholes-1790	14.6	Kirkland_Manholes-1792	14.49	82.9	0.13	21	PVC	0.01	3,367	339	740	1,080	32.1		
Kirkland_Main-1079	Kirkland_Manholes-1791	8.2	PLAZA_WW	6	10.6	20.76	16	Ductile Iron	0.012	16,998	390	896	1,286	7.6	SM14-Ex-EX182	
Kirkland_Main-1080	Kirkland_Manholes-1792	14.49	Kirkland_Manholes-1795	13.3	199	0.6	21	PVC	0.01	7,159	340	747	1,087	15.2		
Kirkland_Main-1081	Kirkland_Manholes-1800	147.89	Kirkland_Manholes-1799	133.76	154.6	9.14	6	Concrete	0.013	761	2	8	10	1.4	SM14-Ex-EX146	
Kirkland_Main-1082	Kirkland_Manholes-1799	133.76	Kirkland_Manholes-1798	126.65	165.5	4.3	6	Concrete	0.013	522	5	25	30	5.7	SM14-Ex-EX146	
Kirkland_Main-1083	Kirkland_Manholes-1797	142.57	Kirkland_Manholes-1798	126.65	291.9	5.45	8	Concrete	0.013	1,267	49	196	245	19.3	SM4	
Kirkland_Main-1084	Kirkland_Manholes-1796	160.8	Kirkland_Manholes-1797	142.57	315.3	5.78	8	Concrete	0.013	1,304	46	179	225	17.3	SM4	
Kirkland_Main-1085	Kirkland_Manholes-1798	126.65	Kirkland_Manholes-1801	112.29	288.6	4.97	8	Concrete	0.013	1,210	55	229	283	23.4	SM4	
Kirkland_Main-1086	Kirkland_Manholes-2191	134.63	Kirkland_Manholes-2190	132.39	117.1	1.91	8	PVC	0.01	975	3	16	20	2		
Kirkland_Main-1088	Kirkland_Manholes-2194	68	Kirkland_Manholes-2193	64.5	142	2.47	6	Concrete	0.013	395	1	8	9	2.2	SM14-Ex-EX187	
Kirkland_Main-1089	Kirkland_Manholes-2193	64.5	Kirkland_Manholes-2145	63.1	194.7	0.72	8	Concrete	0.013	460	4	41	46	9.9	SM14-Ex-EX187	
Kirkland_Main-1091	Kirkland_Manholes-2187	114.37	Kirkland_Manholes-2185	103.23	164.5	6.77	6	Concrete	0.013	655	6	16	22	3.4	SM14-Ex-EX188	
Kirkland_Main-1092	Kirkland_Manholes-2185	103.23	Kirkland_Manholes-2184	75.09	227	12.4	6	Concrete	0.013	887	31	66	97	10.9	SM14-Ex-EX188	
Kirkland_Main-1093	Kirkland_Manholes-2184	75.09	Kirkland_Manholes-2144	65.5	214.4	4.47	6	Concrete	0.013	533	31	74	105	19.7	SM14-Ex-EX188	
Kirkland_Main-1094	Kirkland_Manholes-2199	42.12	Kirkland_Manholes-2201	34.26	130.3	6.03	8	PVC	0.01	1,731	49	6	55	3.2		
Kirkland_Main-1095	Kirkland_Manholes-2201	34.26	Kirkland_Manholes-2200	29.87	27.9	15.75	8	PVC	0.01	2,798	49	13	62	2.2		
Kirkland_Main-1096	Kirkland_Manholes-2098	53.6	Kirkland_Manholes-2097	45.25	198.1	4.22	6	Concrete	0.013	517	2	6	8	1.6	SM14-Ex-EX233	
Kirkland_Main-1097	Kirkland_Manholes-2195	483.44	Kirkland_Manholes-2196	481.85	326.8	0.49	8	PVC	0.01	492	1	4	5	1		
Kirkland_Main-1098	Kirkland_Manholes-2196	481.85	Kirkland_Manholes-2197	480.89	188.7	0.51	8	PVC	0.01	503	1	8	9	1.8		
Kirkland_Main-1099	Kirkland_Manholes-2111	59.56	Kirkland_Manholes-2099	57.72	398	0.46	12	Concrete	0.013	1,087	69	194	263	24.2	SM14-Ex-EX222	
Kirkland_Main-1100	Kirkland_Manholes-2100	58.67	Kirkland_Manholes-2099	57.72	62.5	1.52	8	Concrete	0.013	669	8	18	27	4	SM14-Ex-EX234	
Kirkland_Main-1101	Kirkland_Manholes-2101	73.68	Kirkland_Manholes-2100	58.67	124.9	12.02	8	PVC	0.01	2,444	8	12	20	0.8		
Kirkland_Main-1102	Kirkland_Manholes-2102	127.52	Kirkland_Manholes-2101	73.68	250.6	21.48	8	PVC	0.01	3,268	4	6	10	0.3		
Kirkland_Main-1104	Kirkland_Manholes-2103	51.49	Kirkland_Manholes-2104	41.29	235.7	4.33	6	Concrete	0.013	524	0	6	7	1.3	SM14-Ex-EX231	
Kirkland_Main-1105	Kirkland_Manholes-2447	28.08	Kirkland_Manholes-2448	25.41	138	1.94	12	PVC	0.01	2,892	1	6	8	0.3		
Kirkland_Main-1106	Kirkland_Manholes-2448	25.41	Kirkland_Manholes-2451	24.29	346.6	0.32	12	PVC	0.01	1,182	12	19	32	2.7		
Kirkland_Main-1107	Kirkland_Manholes-2449	27.6	Kirkland_Manholes-2448	25.41	29.8	7.34	8	PVC	0.01	1,910	9	6	16	0.8		
Kirkland_Main-1108	Kirkland_Manholes-2450	27.97	Kirkland_Manholes-2451	24.29	50.3	7.31	8	PVC	0.01	1,906	2	13	15	0.8		
Kirkland_Main-1109	Kirkland_Manholes-2491	35.69	Kirkland_Manholes-2450	27.97	197.9	3.9	6	Concrete	0.013	497	1	6	7	1.5	SM14-Ex-EX278	
Kirkland_Main-1110	Kirkland_Manholes-2451	24.29	Kirkland_Manholes-2452	24.18	330.9	0.03	12	PVC	0.01	374	14	39	53	14.2		
Kirkland_Main-1111	Kirkland_Manholes-2452	24.18	Kirkland_Manholes-2454	23.57	255.1	0.24	12	PVC	0.01	1,016	22	58	81	8		
Kirkland_Main-1112	Kirkland_Manholes-2453	27.74	Kirkland_Manholes-2452	24.18	62.2	5.72	8	PVC	0.01	1,686	8	13	21	1.2		
Kirkland_Main-1113	Kirkland_Manholes-2093	44.98	Kirkland_Manholes-2453	27.74	236.1	7.3	6	Concrete	0.013	681	7	6	13	2	SM14-Ex-EX276	
Kirkland_Main-1114	Kirkland_Manholes-2097	45.25	Kirkland_Manholes-2455	44.41	209.1	0.4	6	Concrete	0.013	159	6	13	19	11.6	SM14-Ex-EX233	Drop Connection
Kirkland_Main-1115	Kirkland_Manholes-2455	26.2	Kirkland_Manholes-2454	23.57	36.4	7.21	6	PVC	0.01	879	7	19	27	3	SM14-Ex-EX233	
Kirkland_Main-1116	Kirkland_Manholes-2454	23.57	Kirkland_Manholes-2456	21.67	413.5	0.46	12	PVC	0.01	1,410	29	84	114	8.1		
Kirkland_Main-1117	Kirkland_Manholes-2457	26.27	Kirkland_Manholes-2456	21.67	49.5	9.28	8	PVC	0.01	2,148	7	19	27	1.2		
Kirkland_Main-1118	Kirkland_Manholes-2202	26.91	Kirkland_Manholes-2305	25.32	49.2	3.23	8	PVC	0.01	1,266	49	26	75	5.9		Drop Connection

Existing - Peak Hour Flow - Pipe Capacity Table

Label	Upstream Node	Upstream Invert Elevation (ft)	Downstream Node	Downstream Invert Elevation (ft)	Length (ft)	Slope (%)	Diameter (in)	Material	Manning's n	Design Capacity (gpm)	Domestic Flow (gpm)	I/I Flow (gpm)	Total Flow (gpm)	Percent Full (%)	CIP No.	Notes
Kirkland_Main-1119	Kirkland_Manholes-2205	23.1	Kirkland_Manholes-2306	15.63	44.6	16.73	8	PVC	0.01	2,884	6	32	39	1.3		Drop Connection
Kirkland_Main-1120	Kirkland_Manholes-2306	15.63	Kirkland_Manholes-2305	15.26	357	0.1	21	PVC	0.01	2,976	213	643	856	28.8		
Kirkland_Main-1121	Kirkland_Manholes-2307	15.73	Kirkland_Manholes-2306	15.63	136.3	0.07	21	PVC	0.01	2,504	207	604	811	32.4		
Kirkland_Main-1122	Kirkland_Manholes-2217	22.48	Kirkland_Manholes-2308	22.33	38	0.4	8	PVC	0.01	446	11	39	50	11.2		Drop Connection
Kirkland_Main-1123	Kirkland_Manholes-2308	15.98	Kirkland_Manholes-2307	15.73	271.4	0.09	21	PVC	0.01	2,806	199	597	796	28.4		
Kirkland_Main-1124	Kirkland_Manholes-2309	16.24	Kirkland_Manholes-2308	15.98	211.8	0.12	21	PVC	0.01	3,239	186	552	738	22.8		
Kirkland_Main-1125	Kirkland_Manholes-2313	16.39	Kirkland_Manholes-2309	16.24	162.2	0.09	21	PVC	0.01	2,811	181	545	727	25.9		
Kirkland_Main-1126	Kirkland_Manholes-2314	16.65	Kirkland_Manholes-2313	16.39	183.4	0.14	21	PVC	0.01	3,481	167	500	667	19.2		
Kirkland_Main-1127	Kirkland_Manholes-2315	16.77	Kirkland_Manholes-2314	16.65	235.7	0.05	21	PVC	0.01	2,086	148	416	564	27		
Kirkland_Main-1128	Kirkland_Manholes-2316	17.03	Kirkland_Manholes-2315	16.77	315.7	0.08	21	PVC	0.01	2,653	148	409	557	21		
Kirkland_Main-1129	Kirkland_Manholes-2317	17.2	Kirkland_Manholes-2316	17.03	183.4	0.09	21	PVC	0.01	2,815	138	403	541	19.2		
Kirkland_Main-1130	Kirkland_Manholes-2155	23.66	Kirkland_Manholes-2318	17.6	47.1	12.87	8	PVC	0.01	2,530	27	97	124	4.9		
Kirkland_Main-1131	Kirkland_Manholes-2318	17.6	Kirkland_Manholes-2317	17.2	364	0.11	21	PVC	0.01	3,053	131	390	521	17		
Kirkland_Main-1132	Kirkland_Manholes-2319	17.7	Kirkland_Manholes-2318	17.6	48.4	0.21	21	PVC	0.01	4,200	102	279	382	9.1		
Kirkland_Main-1136	Kirkland_Manholes-2874	209.8	Kirkland_Manholes-2873	208.01	164.9	1.09	8	PVC	0.01	735	0	4	4	0.5		
Kirkland_Main-1137	Kirkland_Manholes-2873	208.01	Kirkland_Manholes-2872	207.03	88.7	1.1	8	PVC	0.01	741	0	8	8	1.1		
Kirkland_Main-1138	Kirkland_Manholes-2872	207.03	Kirkland_Manholes-2871	205.15	113.5	1.66	8	PVC	0.01	907	0	16	16	1.8		
Kirkland_Main-1139	Kirkland_Manholes-2871	205.15	Kirkland_Manholes-2869	204.84	44.2	0.7	8	PVC	0.01	591	0	20	20	3.4		
Kirkland_Main-1140	Kirkland_Manholes-2869	204.84	Kirkland_Manholes-2870	201.21	123.4	2.94	18	PVC	0.01	10,510	549	2,062	2,611	24.8		
Kirkland_Main-1141	Kirkland_Manholes-2870	201.21	Kirkland_Manholes-1103	198.97	205	1.09	18	PVC	0.01	6,407	549	2,066	2,615	40.8		
Kirkland_Main-1142	Kirkland_Manholes-2875	310.11	Kirkland_Manholes-898	306.89	269.8	1.19	8	PVC	0.01	770	0	4	4	0.5		
Kirkland_Main-1143	Kirkland_Manholes-2475	210.58	Kirkland_Manholes-2477	189.6	360	5.83	8	Concrete	0.013	1,309	2	4	6	0.5	SM14-Ex-EX241	
Kirkland_Main-1144	Kirkland_Manholes-2478	190.32	Kirkland_Manholes-2477	189.6	67.1	1.07	8	Concrete	0.013	562	1	4	5	0.9	SM14-Ex-EX241	
Kirkland_Main-1145	Kirkland_Manholes-2477	189.6	Kirkland_Manholes-2479	186.26	224.2	1.49	8	Concrete	0.013	662	4	12	16	2.4	SM14-Ex-EX241	
Kirkland_Main-1146	Kirkland_Manholes-2479	186.26	Kirkland_Manholes-2482	184.91	81	1.67	8	PVC	0.01	910	6	24	30	3.3		
Kirkland_Main-1147	Kirkland_Manholes-2480	187.23	Kirkland_Manholes-2479	186.26	143.4	0.68	8	Concrete	0.013	446	2	8	10	2.3	SM14-Ex-EX241	
Kirkland_Main-1148	Kirkland_Manholes-2489	190.15	Kirkland_Manholes-2480	187.23	230.1	1.27	8	Concrete	0.013	611	1	4	5	0.8	SM14-Ex-EX241	
Kirkland_Main-1149	Kirkland_Manholes-2481	184.88	Kirkland_Manholes-2490	173.27	348.4	3.33	8	Concrete	0.013	990	2	4	6	0.6	SM14-Ex-EX242	
Kirkland_Main-1150	Kirkland_Manholes-2482	184.91	Kirkland_Manholes-2483	165.54	140.6	13.78	8	PVC	0.01	2,617	7	28	35	1.3		
Kirkland_Main-1152	Kirkland_Manholes-2483	165.54	Kirkland_Manholes-2488	154.5	273.8	4.03	8	PVC	0.01	1,416	9	32	40	2.9		
Kirkland_Main-1153	Kirkland_Manholes-2488	154.5	Kirkland_Manholes-2487	153.78	111.9	0.64	8	PVC	0.01	566	10	36	46	8.1		
Kirkland_Main-1154	Kirkland_Manholes-2490	173.27	Kirkland_Manholes-2485	153.26	284.1	7.04	8	Concrete	0.013	1,439	24	75	100	6.9	SM14-Ex-EX242	
Kirkland_Main-1156	Kirkland_Manholes-2484	189.79	Kirkland_Manholes-2485	153.26	364.5	10.02	8	Concrete	0.013	1,717	2	4	6	0.4	SM14-Ex-EX239	
Kirkland_Main-1157	Kirkland_Manholes-2487	153.78	Kirkland_Manholes-2486	152.49	105	1.23	8	PVC	0.01	782	10	40	50	6.4		
Kirkland_Main-1158	Kirkland_Manholes-2485	153.26	Kirkland_Manholes-2486	152.49	113.6	0.68	8	Concrete	0.013	446	28	83	111	24.9	SM14-Ex-EX239	
Kirkland_Main-1159	Kirkland_Manholes-1429	514.5	Kirkland_Manholes-1427	513.21	125.2	1.03	8	PVC	0.01	715	3	16	19	2.6		
Kirkland_Main-1160	Kirkland_Manholes-1427	513.21	Kirkland_Manholes-1428	512.46	129.3	0.58	8	PVC	0.01	537	5	24	29	5.4		
Kirkland_Main-1161	Kirkland_Manholes-1428	512.46	Kirkland_Manholes-1434	511.6	190.6	0.45	8	PVC	0.01	474	5	28	33	7		
Kirkland_Main-1162	Kirkland_Manholes-1430	516.64	Kirkland_Manholes-1429	514.5	144.2	1.48	8	PVC	0.01	859	3	12	14	1.7		
Kirkland_Main-1164	Kirkland_Manholes-2175	133.14	Kirkland_Manholes-2174	132.67	117.8	0.4	8	PVC	0.01	446	1	8	9	2.1		
Kirkland_Main-1165	Kirkland_Manholes-2174	132.67	Kirkland_Manholes-2173	131.99	11.1	6.13	8	PVC	0.01	1,745	2	16	18	1.1		
Kirkland_Main-1166	Kirkland_Manholes-2173	131.99	Kirkland_Manholes-2172	130.6	348.2	0.4	6	Concrete	0.013	159	23	25	47	29.6	SM14-Ex-EX192	Drop Connection
Kirkland_Main-1167	Kirkland_Manholes-2172	107.91	Kirkland_Manholes-2163	75.42	383.7	8.47	6	Concrete	0.013	733	24	33	57	7.8	SM14-Ex-EX192	
Kirkland_Main-1168	Kirkland_Manholes-2163	75.42	Kirkland_Manholes-2141	73.53	47.4	3.99	8	PVC	0.01	1,408	24	41	66	4.7		
Kirkland_Main-1169	Kirkland_Manholes-2183	146.45	Kirkland_Manholes-2182	136.23	145.7	7.02	8	PVC	0.01	1,868	0	8	9	0.5		
Kirkland_Main-1170	Kirkland_Manholes-2182	136.23	Kirkland_Manholes-2181	133.52	88.2	3.07	8	PVC	0.01	1,236	0	16	17	1.4		
Kirkland_Main-1171	Kirkland_Manholes-2181	133.52	Kirkland_Manholes-2180	125.44	163.5	4.94	8	PVC	0.01	1,567	1	25	26	1.6		
Kirkland_Main-1172	Kirkland_Manholes-2180	125.44	Kirkland_Manholes-2179	120.67	330.4	1.44	8	PVC	0.01	847	3	33	36	4.3		
Kirkland_Main-1173	Kirkland_Manholes-2179	120.67	Kirkland_Manholes-2178	102.28	199.5	9.22	8	PVC	0.01	2,140	5	41	47	2.2		
Kirkland_Main-1174	Kirkland_Manholes-2178	102.28	Kirkland_Manholes-2177	75.93	214.6	12.28	8	PVC	0.01	2,471	6	49	55	2.2		
Kirkland_Main-1175	Kirkland_Manholes-2177	75.93	Kirkland_Manholes-2176	70.83	149.4	3.41	8	PVC	0.01	1,303	6	58	64	4.9		
Kirkland_Main-1176	Kirkland_Manholes-2176	70.83	Kirkland_Manholes-2142	68.99	36.2	5.08	8	PVC	0.01	1,589	6	66	72	4.5		
Kirkland_Main-1177	Kirkland_Manholes-2366	292.68	Kirkland_Manholes-2365	289.93	42.5	6.47	8	Concrete	0.013	1,380	24	79	103	7.5	SM14-Ex-EX260	
Kirkland_Main-1178	Kirkland_Manholes-2368	290.87	Kirkland_Manholes-2365	289.93	48.6	1.94	8	PVC	0.01	981	1	4	5	0.5		
Kirkland_Main-1179	Kirkland_Manholes-2372	304.48	Kirkland_Manholes-2371	291.2	253.9	5.23	8	Concrete	0.013	1,240	14	44	57	4.6	SM14-Ex-EX257	
Kirkland_Main-1180	Kirkland_Manholes-2378	312.05	Kirkland_Manholes-2372	304.48	224.1	3.38	8	Concrete	0.013	997	10	24	34	3.4	SM14-Ex-EX257	
Kirkland_Main-1181	Kirkland_Manholes-2373	306.85	Kirkland_Manholes-2372	304.48	403.1	0.59	8	Concrete	0.013	416	2	8	10	2.5	SM14-Ex-EX258	
Kirkland_Main-1182	Kirkland_Manholes-2374	307.1	Kirkland_Manholes-2373	306.85	109.8	0.23	8	Concrete	0.013	259	1	4	5	2	SM14-Ex-EX258	
Kirkland_Main-1183	Kirkland_Manholes-2376	359.31	Kirkland_Manholes-2375	323.76	368.2	9.66	8	Concrete	0.013	1,685	4	4	8	0.5	SM14-Ex-EX259	
Kirkland_Main-1184	Kirkland_Manholes-2375	323.76	Kirkland_Manholes-2377	320.51	173.5	1.87	8	Concrete	0.013	742	6	8	14	1.9	SM14-Ex-EX259	
Kirkland_Main-1185	Kirkland_Manholes-2377	320.51	Kirkland_Manholes-2378	312.05	352.3	2.4	8	Concrete	0.013	840	8	12	20	2.3	SM14-Ex-EX259	
Kirkland_Main-1186	Kirkland_Manholes-2379	312.61	Kirkland_Manholes-2378	312.05	23.8	2.35	8	Concrete	0.013	831	2	8	10	1.2	SM14-Ex-EX257	

Existing - Peak Hour Flow - Pipe Capacity Table

Label	Upstream Node	Upstream Invert Elevation (ft)	Downstream Node	Downstream Invert Elevation (ft)	Length (ft)	Slope (%)	Diameter (in)	Material	Manning's n	Design Capacity (gpm)	Domestic Flow (gpm)	I/I Flow (gpm)	Total Flow (gpm)	Percent Full (%)	CIP No.	Notes
Kirkland_Main-1187	Kirkland_Manholes-2380	290.72	Kirkland_Manholes-2430	273.69	397.1	4.29	8	Concrete	0.013	1,123	2	8	10	0.9	SM14-Ex-EX286	
Kirkland_Main-1188	Kirkland_Manholes-2381	293.12	Kirkland_Manholes-2380	290.72	144.3	1.66	6	Concrete	0.013	325	1	4	5	1.6	SM14-Ex-EX286	
Kirkland_Main-1189	Kirkland_Manholes-2385	343.75	Kirkland_Manholes-2383	328.5	173.4	8.79	8	Concrete	0.013	1,608	8	24	32	2	SM14-Ex-EX260	
Kirkland_Main-1190	Kirkland_Manholes-2384	330.79	Kirkland_Manholes-2383	328.5	64.4	3.56	8	Concrete	0.013	1,023	10	32	42	4.1	SM14-Ex-EX287	
Kirkland_Main-1191	Kirkland_Manholes-2395	331.59	Kirkland_Manholes-2384	330.79	136.8	0.58	8	Concrete	0.013	415	9	28	37	8.9	SM14-Ex-EX287	
Kirkland_Main-1192	Kirkland_Manholes-2386	373.02	Kirkland_Manholes-2385	343.75	310.7	9.42	8	Concrete	0.013	1,665	7	20	27	1.6	SM14-Ex-EX260	
Kirkland_Main-1193	Kirkland_Manholes-2387	380.46	Kirkland_Manholes-2386	373.02	399.9	1.86	8	Concrete	0.013	740	6	16	21	2.9	SM14-Ex-EX260	
Kirkland_Main-1194	Kirkland_Manholes-2388	388.18	Kirkland_Manholes-2387	380.46	279.2	2.76	8	Concrete	0.013	902	4	12	16	1.7	SM14-Ex-EX260	
Kirkland_Main-1195	Kirkland_Manholes-2533	389.33	Kirkland_Manholes-2388	388.18	396.1	0.29	8	Concrete	0.013	292	2	8	10	3.4	SM14-Ex-EX260	
Kirkland_Main-1196	Kirkland_Manholes-2389	365.8	Kirkland_Manholes-2390	359.58	183.8	3.38	8	Concrete	0.013	998	2	4	6	0.6	SM14-Ex-EX287	
Kirkland_Main-1197	Kirkland_Manholes-2390	359.58	Kirkland_Manholes-2391	347.6	291	4.12	8	Concrete	0.013	1,100	4	8	12	1.1	SM14-Ex-EX287	
Kirkland_Main-1198	Kirkland_Manholes-2391	347.6	Kirkland_Manholes-2392	345.7	123.7	1.54	8	Concrete	0.013	672	6	12	18	2.7	SM14-Ex-EX287	
Kirkland_Main-1199	Kirkland_Manholes-2392	345.7	Kirkland_Manholes-2393	339.78	135.6	4.36	8	Concrete	0.013	1,133	7	16	23	2	SM14-Ex-EX287	
Kirkland_Main-1200	Kirkland_Manholes-2411	259.15	Kirkland_Manholes-2413	251.1	165.8	4.86	8	PVC	0.01	1,554	26	79	106	6.8		
Kirkland_Main-1201	Kirkland_Manholes-2419	203.52	Kirkland_Manholes-2303	195.57	329.3	2.41	8	Concrete	0.013	843	295	580	876	103.9	SM2	
Kirkland_Main-1202	Kirkland_Manholes-2418	218.73	Kirkland_Manholes-2419	203.52	222.4	6.84	8	Concrete	0.013	1,418	287	576	863	60.8	SM2	
Kirkland_Main-1203	Kirkland_Manholes-2417	230.48	Kirkland_Manholes-2418	218.73	175.2	6.71	8	Concrete	0.013	1,405	246	421	667	47.5	SM2	
Kirkland_Main-1204	Kirkland_Manholes-2416	242.81	Kirkland_Manholes-2417	230.48	262.7	4.69	8	Concrete	0.013	1,175	244	417	661	56.2	SM2	
Kirkland_Main-1205	Kirkland_Manholes-2420	230.11	Kirkland_Manholes-2418	218.73	227.2	5.01	8	Concrete	0.013	1,214	41	151	192	15.8	SM14-Ex-EX251	
Kirkland_Main-1206	Kirkland_Manholes-2415	247.52	Kirkland_Manholes-2416	242.81	265.9	1.77	8	Concrete	0.013	722	241	413	655	90.7	SM2	
Kirkland_Main-1207	Kirkland_Manholes-2720	32.22	Kirkland_Manholes-2719	31.99	57.5	0.4	8	PVC	0.01	446	74	6	80	17.9		
Kirkland_Main-1208	Kirkland_Manholes-2414	248.96	Kirkland_Manholes-2415	247.52	131.3	1.1	8	Concrete	0.013	568	240	409	650	114.4	SM2	
Kirkland_Main-1209	Kirkland_Manholes-2413	251.1	Kirkland_Manholes-2414	248.96	118.1	1.81	8	Concrete	0.013	730	240	405	645	88.4	SM2	
Kirkland_Main-1210	Kirkland_Manholes-2421	253.02	Kirkland_Manholes-2413	251.1	118.9	1.61	8	Concrete	0.013	689	213	322	535	77.6	SM2	
Kirkland_Main-1211	Kirkland_Manholes-2422	254.09	Kirkland_Manholes-2421	253.02	92.9	1.15	8	Concrete	0.013	582	210	314	524	90	SM2	
Kirkland_Main-1212	Kirkland_Manholes-2424	257.66	Kirkland_Manholes-2422	254.09	323.2	1.1	8	Concrete	0.013	570	209	310	519	91.1	SM2	
Kirkland_Main-1213	Kirkland_Manholes-2879	68.04	Kirkland_Manholes-2492	55.46	56.8	22.14	8	PVC	0.01	3,317	24	43	67	2		
Kirkland_Main-1214	Kirkland_Manholes-2091	57.76	Kirkland_Manholes-2090	57.52	58.9	0.4	8	Concrete	0.013	343	2	12	14	4.2	SM14-Ex-EX279	Drop Connection
Kirkland_Main-1215	Kirkland_Manholes-2094	57.58	Kirkland_Manholes-2090	57.44	314.4	0.04	12	Concrete	0.013	337	80	237	317	94.1	SM14-Ex-EX222	
Kirkland_Main-1216	Kirkland_Manholes-2092	79.95	Kirkland_Manholes-2091	79.51	110.7	0.4	6	Concrete	0.013	159	2	6	8	5	SM14-Ex-EX279	Drop Connection
Kirkland_Main-1218	Kirkland_Manholes-2095	60.47	Kirkland_Manholes-2094	57.58	55.7	5.18	8	Concrete	0.013	1,235	2	12	14	1.2	SM14-Ex-EX277	
Kirkland_Main-1219	Kirkland_Manholes-2096	71.29	Kirkland_Manholes-2095	60.47	119	9.09	6	Concrete	0.013	759	2	6	8	1.1	SM14-Ex-EX277	
Kirkland_Main-1220	Kirkland_Manholes-2099	57.72	Kirkland_Manholes-2094	57.58	259	0.05	12	Concrete	0.013	372	78	219	296	79.7	SM14-Ex-EX222	
Kirkland_Main-1223	Kirkland_Manholes-2614	304.78	Kirkland_Manholes-2615	302.07	237.1	1.14	8	Concrete	0.013	580	37	103	141	24.2	SM14-Ex-EX299	
Kirkland_Main-1224	Kirkland_Manholes-2615	302.07	Kirkland_Manholes-2618	301.8	67.7	0.4	8	Concrete	0.013	343	37	107	145	42.1	SM14-Ex-EX299	Drop Connection
Kirkland_Main-1225	Kirkland_Manholes-2618	278.4	Kirkland_Manholes-2617	276.43	274.1	0.72	8	Concrete	0.013	460	42	119	161	35.1	SM2	
Kirkland_Main-1226	Kirkland_Manholes-2617	276.43	Kirkland_Manholes-2616	275.44	246.8	0.4	8	Concrete	0.013	343	58	123	181	52.9	SM2	Drop Connection
Kirkland_Main-1227	Kirkland_Manholes-2616	274.02	Kirkland_Manholes-2619	272.54	173.9	0.85	8	Concrete	0.013	500	119	151	270	54	SM2	
Kirkland_Main-1228	Kirkland_Manholes-2619	272.54	Kirkland_Manholes-2428	270.37	122.7	1.77	8	Concrete	0.013	721	119	155	274	38	SM2	
Kirkland_Main-1229	Kirkland_Manholes-407	266.31	Kirkland_Manholes-409	264.84	123.1	1.19	8	PVC	0.01	771	2	8	10	1.3		
Kirkland_Main-1230	Kirkland_Manholes-409	264.84	Kirkland_Manholes-419	263.82	78.4	1.3	8	PVC	0.01	804	3	16	19	2.4		
Kirkland_Main-1231	Kirkland_Manholes-411	265.96	Kirkland_Manholes-412	253.7	218.8	5.6	8	PVC	0.01	1,669	1	4	5	0.3		
Kirkland_Main-1232	Kirkland_Manholes-412	253.7	Kirkland_Manholes-413	252.76	178.3	0.53	8	PVC	0.01	512	2	8	10	1.9		
Kirkland_Main-1233	Kirkland_Manholes-413	252.76	Kirkland_Manholes-414	251.5	46.6	2.7	8	PVC	0.01	1,159	3	12	15	1.3		
Kirkland_Main-1234	Kirkland_Manholes-414	251.5	Kirkland_Manholes-415	250.52	65.4	1.5	8	PVC	0.01	863	3	16	19	2.1		
Kirkland_Main-1235	Kirkland_Manholes-415	250.52	Kirkland_Manholes-416	248.58	58.4	3.32	8	PVC	0.01	1,285	3	20	23	1.8		
Kirkland_Main-1236	Kirkland_Manholes-416	248.58	Kirkland_Manholes-417	237.12	157.3	7.28	8	PVC	0.01	1,903	4	24	28	1.5		
Kirkland_Main-1237	Kirkland_Manholes-417	237.12	Kirkland_Manholes-2767	236.02	47.6	2.31	8	PVC	0.01	1,071	5	28	32	3		
Kirkland_Main-1238	Kirkland_Manholes-2767	236.02	Kirkland_Manholes-418	235.93	86.7	0.1	8	PVC	0.01	227	5	32	36	16		
Kirkland_Main-1239	Kirkland_Manholes-408	267.9	Kirkland_Manholes-407	266.31	113.3	1.4	8	PVC	0.01	835	1	4	5	0.6		
Kirkland_Main-1240	Kirkland_Manholes-419	263.82	Kirkland_Manholes-625	258	200	2.91	8	PVC	0.01	1,203	4	20	24	2		
Kirkland_Main-1241	Kirkland_Manholes-420	281.46	Kirkland_Manholes-1071	277.81	358.8	1.02	8	PVC	0.01	711	7	36	43	6.1		
Kirkland_Main-1242	Kirkland_Manholes-418	235.93	Kirkland_Manholes-421	235.77	9.8	1.63	8	PVC	0.01	901	5	36	40	4.5		
Kirkland_Main-1243	Kirkland_Manholes-422	235.64	Kirkland_Manholes-341	235.59	30.3	0.17	8	Ductile Iron	0.012	239	5	44	49	20.4	SM14-Ex-EX49	
Kirkland_Main-1244	Kirkland_Manholes-421	235.77	Kirkland_Manholes-422	235.64	135.2	0.1	8	Ductile Iron	0.012	182	5	40	45	24.6	SM14-Ex-EX49	
Kirkland_Main-1245	Kirkland_Manholes-423	284.5	Kirkland_Manholes-420	281.46	237.1	1.28	8	PVC	0.01	798	1	4	5	0.6		
Kirkland_Main-1246	Kirkland_Manholes-424	292.81	Kirkland_Manholes-425	290.3	45.2	5.56	8	PVC	0.01	1,662	5	24	29	1.8		
Kirkland_Main-1247	Kirkland_Manholes-1846	15.1	Kirkland_Manholes-1845	14.95	208.8	0.07	12	PVC	0.01	557	5	32	38	6.8	SM10	
Kirkland_Main-1248	Kirkland_Manholes-1845	14.95	Kirkland_Manholes-1844	14.08	225.8	0.39	12	PVC	0.01	1,290	6	39	45	3.5	SM10	
Kirkland_Main-1249	Kirkland_Manholes-1844	14.08	Kirkland_Manholes-1843	13.9	253.8	0.07	12	PVC	0.01	554	8	45	53	9.6	SM10	
Kirkland_Main-1250	Kirkland_Manholes-1843	13.9	Kirkland_Manholes-1842	13.84	237.6	0.03	12	PVC	0.01	330	8	52	60	18.1	SM10	
Kirkland_Main-1251	Kirkland_Manholes-1842	13.84	Kirkland_Manholes-1841	13.3	228.3	0.24	12	PVC	0.01	1,011	9	58	67	6.7	SM10	

Existing - Peak Hour Flow - Pipe Capacity Table

Label	Upstream Node	Upstream Invert Elevation (ft)	Downstream Node	Downstream Invert Elevation (ft)	Length (ft)	Slope (%)	Diameter (in)	Material	Manning's n	Design Capacity (gpm)	Domestic Flow (gpm)	I/I Flow (gpm)	Total Flow (gpm)	Percent Full (%)	CIP No.	Notes
Kirkland_Main-1252	Kirkland_Manholes-1840	12.98	Kirkland_Manholes-1839	12.1	208.1	0.42	12	PVC	0.01	1,352	14	71	86	6.4	SM10	
Kirkland_Main-1253	Kirkland_Manholes-1839	12.1	Kirkland_Manholes-1838	12	159.4	0.06	12	PVC	0.01	521	14	78	92	17.7		
Kirkland_Main-1254	Kirkland_Manholes-1838	12	Kirkland_Manholes-1834	11.35	218.3	0.3	12	PVC	0.01	1,134	16	84	100	8.8		
Kirkland_Main-1255	Kirkland_Manholes-1841	13.3	Kirkland_Manholes-1840	12.98	311	0.1	12	PVC	0.01	667	10	65	75	11.2	SM10	
Kirkland_Main-1256	Kirkland_Manholes-1854	359.04	Kirkland_Manholes-1855	357.41	200.3	0.81	8	PVC	0.01	636	0	4	4	0.6		
Kirkland_Main-1257	Kirkland_Manholes-1855	357.41	Kirkland_Manholes-1856	346.8	232	4.57	8	PVC	0.01	1,508	0	8	8	0.5		
Kirkland_Main-1258	Kirkland_Manholes-1856	346.8	Kirkland_Manholes-1857	344.14	121.8	2.18	8	PVC	0.01	1,042	6	12	18	1.7		
Kirkland_Main-1259	Kirkland_Manholes-1857	344.14	Kirkland_Manholes-1858	335.71	162.8	5.18	8	PVC	0.01	1,605	6	16	22	1.4		
Kirkland_Main-1260	Kirkland_Manholes-1858	335.71	Kirkland_Manholes-1859	326.96	255.9	3.42	8	PVC	0.01	1,304	62	115	178	13.6		
Kirkland_Main-1261	Kirkland_Manholes-1963	340.77	Kirkland_Manholes-1858	335.71	100.1	5.06	8	PVC	0.01	1,585	53	95	149	9.4		
Kirkland_Main-1262	Kirkland_Manholes-1859	326.96	Kirkland_Manholes-1860	317.11	345	2.85	8	PVC	0.01	1,191	62	119	182	15.2		
Kirkland_Main-1263	Kirkland_Manholes-1860	317.11	Kirkland_Manholes-1861	303.96	398.6	3.3	8	PVC	0.01	1,281	63	123	186	14.5		
Kirkland_Main-1264	Kirkland_Manholes-1861	303.96	Kirkland_Manholes-1862	294.2	372.7	2.62	8	PVC	0.01	1,141	63	127	190	16.6		Drop Connection
Kirkland_Main-1265	Kirkland_Manholes-2394	354.21	Kirkland_Manholes-2393	339.78	142.1	10.15	8	Concrete	0.013	1,728	1	4	5	0.3	SM14-Ex-EX287	
Kirkland_Main-1266	Kirkland_Manholes-2393	339.78	Kirkland_Manholes-2395	331.59	110.8	7.39	8	Concrete	0.013	1,475	9	24	32	2.2	SM14-Ex-EX287	
Kirkland_Main-1267	Kirkland_Manholes-2405	418	Kirkland_Manholes-2397	417.95	35.5	0.14	8	PVC	0.01	265	5	28	33	12.5		
Kirkland_Main-1268	Kirkland_Manholes-2397	417.95	Kirkland_Manholes-2398	416.84	162.8	0.68	8	Concrete	0.013	448	6	32	38	8.4	SM14-Ex-EX261	
Kirkland_Main-1269	Kirkland_Manholes-2404	419.23	Kirkland_Manholes-2405	418	199.9	0.62	8	PVC	0.01	553	4	24	28	5		
Kirkland_Main-1270	Kirkland_Manholes-2399	419.47	Kirkland_Manholes-2404	419.23	32.8	0.73	8	PVC	0.01	603	1	8	9	1.4		
Kirkland_Main-1271	Kirkland_Manholes-2403	420.2	Kirkland_Manholes-2404	419.23	274.8	0.35	8	PVC	0.01	419	3	12	15	3.5		
Kirkland_Main-1272	Kirkland_Manholes-2400	420.6	Kirkland_Manholes-2399	419.47	159	0.71	8	PVC	0.01	594	1	4	5	0.8		
Kirkland_Main-1273	Kirkland_Manholes-2402	421.38	Kirkland_Manholes-2403	420.2	252.3	0.47	8	PVC	0.01	482	2	8	10	2		
Kirkland_Main-1274	Kirkland_Manholes-2401	422.6	Kirkland_Manholes-2402	421.38	262.8	0.46	8	PVC	0.01	480	1	4	5	1.1		
Kirkland_Main-1276	Kirkland_Manholes-2398	416.84	Kirkland_Manholes-2406	412.88	316.7	1.25	8	Concrete	0.013	606	7	36	43	7.1	SM14-Ex-EX261	
Kirkland_Main-1277	Kirkland_Manholes-2406	412.88	Kirkland_Manholes-2396	406.38	222.1	2.93	8	Concrete	0.013	928	9	40	49	5.3	SM14-Ex-EX261	
Kirkland_Main-1278	Kirkland_Manholes-2396	406.38	Kirkland_Manholes-2407	403.31	84.2	3.65	8	Concrete	0.013	1,036	10	44	54	5.2	SM14-Ex-EX261	
Kirkland_Main-1279	Kirkland_Manholes-2408	405.44	Kirkland_Manholes-2409	401.93	26.6	13.2	8	PVC	0.01	2,561	0	8	8	0.3		
Kirkland_Main-1281	Kirkland_Manholes-2409	401.93	Kirkland_Manholes-2267	393.07	194.4	4.56	8	PVC	0.01	1,505	0	12	12	0.8		
Kirkland_Main-1282	Kirkland_Manholes-2412	260.78	Kirkland_Manholes-2411	259.15	122.6	1.33	8	PVC	0.01	813	6	12	18	2.2		
Kirkland_Main-1283	Kirkland_Manholes-282	50.07	Kirkland_Manholes-281	36.84	240.3	5.51	8	PVC	0.01	1,654	1	10	11	0.7	SM10	
Kirkland_Main-1284	Kirkland_Manholes-284	50.6	Kirkland_Manholes-282	50.07	132.8	0.4	8	PVC	0.01	446	0	3	3	0.7		
Kirkland_Main-1285	Kirkland_Manholes-283	64.31	Kirkland_Manholes-282	50.07	115.4	12.34	8	PVC	0.01	2,477	1	3	5	0.2	SM10	
Kirkland_Main-1286	Kirkland_Manholes-273	69.52	Kirkland_Manholes-247	65.14	92.5	4.74	8	Concrete	0.013	1,180	50	139	188	16	SM10	
Kirkland_Main-1290	Kirkland_Manholes-274	93.7	Kirkland_Manholes-271	91.78	250.2	0.77	8	Concrete	0.013	475	36	96	132	27.7	SM10	
Kirkland_Main-1292	Kirkland_Manholes-277	72.24	Kirkland_Manholes-278	56.62	141.8	11.02	8	Concrete	0.013	1,800	2	3	6	0.3	SM10	
Kirkland_Main-1293	Kirkland_Manholes-278	56.62	Kirkland_Manholes-280	27.37	245.1	11.93	8	Concrete	0.013	1,874	31	13	44	2.3	SM10	
Kirkland_Main-1294	Kirkland_Manholes-276	92.16	Kirkland_Manholes-299	66.63	263.6	9.68	8	Concrete	0.013	1,688	2	6	9	0.5	SM10	
Kirkland_Main-1295	Kirkland_Manholes-267	95.34	Kirkland_Manholes-275	94.08	184.4	0.68	8	Concrete	0.013	448	34	87	121	27	SM10	
Kirkland_Main-1296	Kirkland_Manholes-275	94.08	Kirkland_Manholes-274	93.7	61.9	0.61	8	Concrete	0.013	425	34	92	126	29.7	SM10	
Kirkland_Main-1297	Kirkland_Manholes-270	94.47	Kirkland_Manholes-271	91.78	344.2	0.78	8	Concrete	0.013	479	10	30	40	8.3	SM10	
Kirkland_Main-1298	Kirkland_Manholes-269	103.08	Kirkland_Manholes-270	94.47	190.8	4.51	8	Concrete	0.013	1,152	7	26	32	2.8	SM10	
Kirkland_Main-1299	Kirkland_Manholes-268	108.82	Kirkland_Manholes-269	103.08	133.1	4.31	8	Concrete	0.013	1,126	5	21	26	2.3	SM10	
Kirkland_Main-1300	Kirkland_Manholes-2521	363.83	Kirkland_Manholes-2525	348.63	167.1	9.09	8	PVC	0.01	2,126	2	5	7	0.3		
Kirkland_Main-1301	Kirkland_Manholes-2519	384.75	Kirkland_Manholes-2522	362.4	159.7	13.99	8	PVC	0.01	2,637	2	2	4	0.1		
Kirkland_Main-1302	Kirkland_Manholes-2522	362.4	Kirkland_Manholes-2523	357.31	64.3	7.92	8	PVC	0.01	1,984	2	5	7	0.3		
Kirkland_Main-1303	Kirkland_Manholes-2523	357.31	Kirkland_Manholes-2524	346.56	113.2	9.5	8	PVC	0.01	2,173	3	7	10	0.5		
Kirkland_Main-1304	Kirkland_Manholes-2524	346.56	Kirkland_Manholes-2527	340.94	187	3.01	8	PVC	0.01	1,222	22	30	52	4.3		
Kirkland_Main-1305	Kirkland_Manholes-2526	336.85	Kirkland_Manholes-2776	334.45	375.1	0.64	8	PVC	0.01	564	29	79	108	19.1		
Kirkland_Main-1306	Kirkland_Manholes-2527	340.94	Kirkland_Manholes-2526	336.85	509.8	0.8	8	PVC	0.01	631	29	77	105	16.7		
Kirkland_Main-1307	Kirkland_Manholes-2525	348.63	Kirkland_Manholes-2527	340.94	406	1.89	8	PVC	0.01	970	7	44	51	5.3		
Kirkland_Main-1308	Kirkland_Manholes-2528	359.11	Kirkland_Manholes-2525	348.63	235.4	4.45	8	PVC	0.01	1,488	4	37	41	2.8		
Kirkland_Main-1309	Kirkland_Manholes-2529	365.07	Kirkland_Manholes-2528	362.98	40.4	5.17	8	PVC	0.01	1,604	3	35	38	2.4		Drop Connection
Kirkland_Main-1310	Kirkland_Manholes-2531	381.45	Kirkland_Manholes-2529	365.07	303.2	5.4	8	PVC	0.01	1,639	3	33	36	2.2		
Kirkland_Main-1311	Kirkland_Manholes-2530	382.12	Kirkland_Manholes-2531	381.45	45.8	1.46	8	PVC	0.01	853	3	30	34	3.9		
Kirkland_Main-1312	Kirkland_Manholes-2532	395.91	Kirkland_Manholes-2530	382.12	311	4.43	8	PVC	0.01	1,485	2	28	30	2		
Kirkland_Main-1313	Kirkland_Manholes-2534	391.7	Kirkland_Manholes-2533	389.33	214.8	1.1	8	Concrete	0.013	570	1	4	5	0.9	SM14-Ex-EX260	
Kirkland_Main-1315	Kirkland_Manholes-2535	407.5	Kirkland_Manholes-2536	406.16	143.7	0.93	8	PVC	0.01	681	13	4	17	2.4		
Kirkland_Main-1316	Kirkland_Manholes-2536	406.16	Kirkland_Manholes-2537	404.02	173.1	1.24	8	PVC	0.01	784	17	8	25	3.2		
Kirkland_Main-1317	Kirkland_Manholes-2537	404.02	Kirkland_Manholes-2538	403.64	31.1	1.22	8	PVC	0.01	780	17	12	29	3.7		
Kirkland_Main-1318	Kirkland_Manholes-2541	412.62	Kirkland_Manholes-2538	403.64	249.5	3.6	8	Concrete	0.013	1,029	5	12	16	1.6	SM14-Ex-EX299	
Kirkland_Main-1320	Kirkland_Manholes-2538	403.64	Kirkland_Manholes-2542	402.84	199.8	0.4	8	Concrete	0.013	343	22	28	50	14.6	SM14-Ex-EX299	
Kirkland_Main-1321	Kirkland_Manholes-2539	420.17	Kirkland_Manholes-2540	419.4	116.4	0.66	8	Concrete	0.013	441	2	4	6	1.3	SM14-Ex-EX299	

Existing - Peak Hour Flow - Pipe Capacity Table

Label	Upstream Node	Upstream Invert Elevation (ft)	Downstream Node	Downstream Invert Elevation (ft)	Length (ft)	Slope (%)	Diameter (in)	Material	Manning's n	Design Capacity (gpm)	Domestic Flow (gpm)	I/I Flow (gpm)	Total Flow (gpm)	Percent Full (%)	CIP No.	Notes
Kirkland_Main-1322	Kirkland_Manholes-2540	419.4	Kirkland_Manholes-2541	412.62	255.5	2.65	8	Concrete	0.013	884	3	8	11	1.3	SM14-Ex-EX299	
Kirkland_Main-1324	Kirkland_Manholes-2542	402.84	Kirkland_Manholes-2547	388.67	366.3	3.87	8	Concrete	0.013	1,067	24	32	55	5.2	SM14-Ex-EX299	
Kirkland_Main-1325	Kirkland_Manholes-2547	388.67	Kirkland_Manholes-2549	373.53	148.8	10.17	8	Concrete	0.013	1,730	25	36	60	3.5	SM14-Ex-EX299	
Kirkland_Main-1327	Kirkland_Manholes-2543	398.38	Kirkland_Manholes-2545	394.25	263.6	1.57	8	PVC	0.01	883	3	8	10	1.2		
Kirkland_Main-1328	Kirkland_Manholes-2544	407.5	Kirkland_Manholes-2543	398.38	295.7	3.08	8	Concrete	0.013	952	2	4	6	0.6	SM14-Ex-EX308	
Kirkland_Main-1329	Kirkland_Manholes-2546	394.6	Kirkland_Manholes-2545	394.25	207.1	0.17	8	PVC	0.01	290	0	4	4	1.5		
Kirkland_Main-1330	Kirkland_Manholes-2545	394.25	Kirkland_Manholes-2548	359.75	323.6	10.66	8	PVC	0.01	2,302	6	16	22	1		
Kirkland_Main-1331	Kirkland_Manholes-2549	373.53	Kirkland_Manholes-2550	363.01	106.8	9.85	8	Concrete	0.013	1,702	25	40	64	3.8	SM14-Ex-EX299	
Kirkland_Main-1332	Kirkland_Manholes-2550	363.01	Kirkland_Manholes-2551	350.96	184.1	6.54	8	Concrete	0.013	1,387	25	44	69	4.9	SM14-Ex-EX299	
Kirkland_Main-1333	Kirkland_Manholes-2551	350.96	Kirkland_Manholes-2552	332.83	142.8	12.69	8	Concrete	0.013	1,932	36	83	120	6.2	SM14-Ex-EX299	
Kirkland_Main-1334	Kirkland_Manholes-2552	332.83	Kirkland_Manholes-2559	326.46	239.1	2.66	8	Concrete	0.013	885	37	95	133	15	SM14-Ex-EX299	
Kirkland_Main-1335	Kirkland_Manholes-2555	336.08	Kirkland_Manholes-2552	332.83	311.9	1.04	8	Concrete	0.013	554	1	8	9	1.6	SM14-Ex-EX322	
Kirkland_Main-1336	Kirkland_Manholes-2553	338.58	Kirkland_Manholes-2554	334.68	146	2.67	6	Concrete	0.013	412	1	4	5	1.1	SM14-Ex-EX304	
Kirkland_Main-1337	Kirkland_Manholes-2892	130.3	Kirkland_Manholes-7	127.07	138.9	2.32	8	PVC	0.01	1,075	1	1	3	0.2		
Kirkland_Main-1338	Kirkland_Manholes-2554	334.68	Kirkland_Manholes-2558	329.23	295.9	1.84	6	Concrete	0.013	342	6	8	14	4	SM14-Ex-EX304	
Kirkland_Main-1339	Kirkland_Manholes-2556	339.44	Kirkland_Manholes-2555	336.08	338.5	0.99	6	Concrete	0.013	251	1	4	5	1.9	SM14-Ex-EX322	
Kirkland_Main-1340	Kirkland_Manholes-2557	338.97	Kirkland_Manholes-2564	326.24	273.9	4.65	8	Concrete	0.013	1,169	0	4	4	0.4	SM14-Ex-EX303	
Kirkland_Main-1341	Kirkland_Manholes-2558	329.23	Kirkland_Manholes-2562	315.88	275	4.86	8	Concrete	0.013	1,195	6	12	18	1.5	SM14-Ex-EX304	
Kirkland_Main-1342	Kirkland_Manholes-2559	326.46	Kirkland_Manholes-2614	304.78	296.2	7.32	8	Concrete	0.013	1,467	37	99	137	9.3	SM14-Ex-EX299	
Kirkland_Main-1343	Kirkland_Manholes-2561	358.82	Kirkland_Manholes-2551	350.96	208.8	3.76	8	PVC	0.01	1,368	11	36	47	3.4		
Kirkland_Main-1344	Kirkland_Manholes-2560	366.92	Kirkland_Manholes-2561	358.82	174.3	4.65	8	PVC	0.01	1,520	1	4	5	0.4		
Kirkland_Main-1345	Kirkland_Manholes-2562	315.88	Kirkland_Manholes-2563	304.66	203.7	5.51	8	Concrete	0.013	1,273	7	16	23	1.8	SM14-Ex-EX304	
Kirkland_Main-1346	Kirkland_Manholes-2563	304.66	Kirkland_Manholes-2603	296.02	227.1	3.81	8	Concrete	0.013	1,058	9	20	29	2.7	SM14-Ex-EX304	
Kirkland_Main-1347	Kirkland_Manholes-2564	326.24	Kirkland_Manholes-2565	315.02	180.1	6.23	8	Concrete	0.013	1,354	1	8	9	0.7	SM14-Ex-EX303	
Kirkland_Main-1349	Kirkland_Manholes-2565	315.02	Kirkland_Manholes-2590	303.32	215.8	5.42	8	Concrete	0.013	1,263	7	40	47	3.7	SM14-Ex-EX303	
Kirkland_Main-1350	Kirkland_Manholes-2567	316.05	Kirkland_Manholes-2565	315.02	200.2	0.51	8	Concrete	0.013	389	5	28	33	8.4	SM14-Ex-EX307	
Kirkland_Main-1353	Kirkland_Manholes-2456	21.67	Kirkland_Manholes-2458	21.12	286.3	0.19	12	PVC	0.01	911	46	110	156	17.1		
Kirkland_Main-1354	Kirkland_Manholes-2104	41.29	Kirkland_Manholes-2457	40.34	237.1	0.4	6	Concrete	0.013	159	6	13	19	12.2	SM14-Ex-EX231	Drop Connection
Kirkland_Main-1355	Kirkland_Manholes-2459	25.23	Kirkland_Manholes-2458	21.12	57.9	7.1	8	PVC	0.01	1,879	0	13	13	0.7		
Kirkland_Main-1356	Kirkland_Manholes-2458	21.12	Kirkland_Manholes-2460	20.42	280.8	0.25	12	PVC	0.01	1,038	56	130	186	17.9		
Kirkland_Main-1357	Kirkland_Manholes-2105	41.32	Kirkland_Manholes-2459	40.36	240.6	0.4	6	Concrete	0.013	159	0	6	7	4.3	SM14-Ex-EX230	Drop Connection
Kirkland_Main-1358	Kirkland_Manholes-2460	20.42	Kirkland_Manholes-2463	19.08	286.9	0.47	12	PVC	0.01	1,421	72	162	234	16.5		
Kirkland_Main-1359	Kirkland_Manholes-2461	23.27	Kirkland_Manholes-2460	20.42	36.9	7.72	8	PVC	0.01	1,959	8	19	27	1.4		
Kirkland_Main-1360	Kirkland_Manholes-2106	63.43	Kirkland_Manholes-2461	62.02	352	0.4	6	Concrete	0.013	159	6	13	19	11.9	SM14-Ex-EX227	Drop Connection
Kirkland_Main-1361	Kirkland_Manholes-2462	20.98	Kirkland_Manholes-2460	20.42	12.7	4.42	8	PVC	0.01	1,483	8	6	15	1		
Kirkland_Main-1362	Kirkland_Manholes-2463	19.08	Kirkland_Manholes-2465	18.4	238.2	0.29	15	PVC	0.01	2,014	82	169	251	12.5		
Kirkland_Main-1363	Kirkland_Manholes-2464	24.34	Kirkland_Manholes-2465	24.15	46.3	0.4	8	PVC	0.01	446	12	32	45	10.1		Drop Connection
Kirkland_Main-1364	Kirkland_Manholes-2465	18.4	Kirkland_Manholes-2321	18.2	405.1	0.05	15	PVC	0.01	837	95	208	303	36.2		
Kirkland_Main-1365	Kirkland_Manholes-2466	40.06	Kirkland_Manholes-2464	24.34	133.9	11.74	8	PVC	0.01	2,416	12	26	38	1.6		
Kirkland_Main-1366	Kirkland_Manholes-754	246.56	Kirkland_Manholes-756	236.14	59.1	17.63	8	PVC	0.01	2,961	3	8	11	0.4		
Kirkland_Main-1367	Kirkland_Manholes-756	236.14	Kirkland_Manholes-759	235.08	17.7	6	8	PVC	0.01	1,727	3	12	15	0.9		
Kirkland_Main-1368	Kirkland_Manholes-759	235.08	Kirkland_Manholes-755	223.34	72.1	16.27	8	PVC	0.01	2,844	4	16	20	0.7		
Kirkland_Main-1369	Kirkland_Manholes-749	322.83	Kirkland_Manholes-748	311.92	207.7	5.25	8	Concrete	0.013	1,243	15	36	51	4.1	SM14-Ex-EX71	
Kirkland_Main-1370	Kirkland_Manholes-743	333.02	Kirkland_Manholes-749	322.83	238.3	4.28	8	Concrete	0.013	1,121	14	32	45	4.1	SM14-Ex-EX71	
Kirkland_Main-1371	Kirkland_Manholes-742	334.85	Kirkland_Manholes-743	333.02	278.1	0.66	8	Concrete	0.013	440	9	20	29	6.5	SM14-Ex-EX71	
Kirkland_Main-1372	Kirkland_Manholes-744	343.43	Kirkland_Manholes-743	333.02	155.4	6.7	8	Concrete	0.013	1,404	3	8	11	0.8	SM14-Ex-EX73	
Kirkland_Main-1373	Kirkland_Manholes-1551	340.04	Kirkland_Manholes-1548	334.13	358.9	1.65	8	Concrete	0.013	696	1	4	5	0.7	SM14-Ex-EX122	
Kirkland_Main-1374	Kirkland_Manholes-1548	334.13	Kirkland_Manholes-1547	314.76	165.7	11.69	8	Concrete	0.013	1,854	2	8	10	0.5	SM14-Ex-EX122	
Kirkland_Main-1375	Kirkland_Manholes-1554	318.87	Kirkland_Manholes-1547	314.76	166.1	2.48	8	Concrete	0.013	853	3	12	15	1.7	SM14-Ex-EX122	
Kirkland_Main-1376	Kirkland_Manholes-1547	314.76	Kirkland_Manholes-1553	308.15	101.4	6.52	8	Concrete	0.013	1,385	5	24	29	2.1	SM14-Ex-EX122	
Kirkland_Main-1377	Kirkland_Manholes-1549	335.84	Kirkland_Manholes-1550	330.23	147.4	3.81	8	Concrete	0.013	1,058	1	4	5	0.4	SM14-Ex-EX122	
Kirkland_Main-1378	Kirkland_Manholes-1550	330.23	Kirkland_Manholes-1554	318.87	207.3	5.48	8	Concrete	0.013	1,270	2	8	10	0.8	SM14-Ex-EX122	
Kirkland_Main-1379	Kirkland_Manholes-741	345.43	Kirkland_Manholes-696	340.09	318.5	1.68	8	Concrete	0.013	702	1	4	5	0.8	SM14-Ex-EX74	
Kirkland_Main-1380	Kirkland_Manholes-696	340.09	Kirkland_Manholes-742	334.85	242.4	2.16	8	Concrete	0.013	797	8	16	23	2.9	SM14-Ex-EX71	
Kirkland_Main-1381	Kirkland_Manholes-820	351.15	Kirkland_Manholes-821	328.81	334.9	6.67	8	Concrete	0.013	1,401	1	4	5	0.4	SM14-Ex-EX72	
Kirkland_Main-1382	Kirkland_Manholes-745	351.42	Kirkland_Manholes-744	343.43	306.7	2.6	8	Concrete	0.013	875	2	4	6	0.7	SM14-Ex-EX73	
Kirkland_Main-1383	Kirkland_Manholes-821	328.81	Kirkland_Manholes-746	326.06	200.6	1.37	8	Concrete	0.013	635	2	8	10	1.5	SM14-Ex-EX72	
Kirkland_Main-1384	Kirkland_Manholes-746	326.06	Kirkland_Manholes-747	319.23	281	2.43	8	Concrete	0.013	846	2	12	14	1.7	SM14-Ex-EX72	
Kirkland_Main-1385	Kirkland_Manholes-747	319.23	Kirkland_Manholes-748	311.92	331.6	2.2	8	Concrete	0.013	805	3	16	19	2.4	SM14-Ex-EX72	
Kirkland_Main-1386	Kirkland_Manholes-1562	206.57	Kirkland_Manholes-1563	203.28	21.7	15.13	8	PVC	0.01	2,743	1	8	9	0.3		
Kirkland_Main-1387	Kirkland_Manholes-1560	251.28	Kirkland_Manholes-455	250.45	217.9	0.38	8	Concrete	0.013	335	23	68	91	27	SM14-Ex-EX68	
Kirkland_Main-1388	Kirkland_Manholes-1559	253.89	Kirkland_Manholes-1560	251.28	258.2	1.01	8	Concrete	0.013	545	22	64	86	15.7	SM14-Ex-EX68	

Existing - Peak Hour Flow - Pipe Capacity Table

Label	Upstream Node	Upstream Invert Elevation (ft)	Downstream Node	Downstream Invert Elevation (ft)	Length (ft)	Slope (%)	Diameter (in)	Material	Manning's n	Design Capacity (gpm)	Domestic Flow (gpm)	I/I Flow (gpm)	Total Flow (gpm)	Percent Full (%)	CIP No.	Notes
Kirkland_Main-1389	Kirkland_Manholes-317	146.79	Kirkland_Manholes-318	146.51	72.2	0.39	8	PVC	0.01	440	89	320	409	93	SM14-Ex-EX30	
Kirkland_Main-1390	Kirkland_Manholes-1052	151.4	Kirkland_Manholes-316	147.8	353.6	1.02	8	PVC	0.01	711	89	303	392	55.1		
Kirkland_Main-1392	Kirkland_Manholes-264	215.3	Kirkland_Manholes-1099	211.44	157	2.46	8	PVC	0.01	1,105	0	4	4	0.4		
Kirkland_Main-1398	Kirkland_Manholes-836	335.7	Kirkland_Manholes-835	335.4	62.1	0.48	8	PVC	0.01	490	11	28	39	7.9		
Kirkland_Main-1399	Kirkland_Manholes-835	335.4	Kirkland_Manholes-839	334.68	84.6	0.85	8	PVC	0.01	650	13	36	48	7.4		
Kirkland_Main-1400	Kirkland_Manholes-837	336.53	Kirkland_Manholes-836	335.7	248.7	0.33	8	PVC	0.01	407	10	24	34	8.3		
Kirkland_Main-1401	Kirkland_Manholes-838	337.31	Kirkland_Manholes-837	336.53	120.5	0.65	8	PVC	0.01	567	7	20	27	4.8		
Kirkland_Main-1402	Kirkland_Manholes-840	326.85	Kirkland_Manholes-841	325.94	71	1.28	8	PVC	0.01	798	19	56	74	9.3		
Kirkland_Main-1403	Kirkland_Manholes-841	325.94	Kirkland_Manholes-842	324.88	230.1	0.46	8	PVC	0.01	479	20	60	80	16.6		
Kirkland_Main-1404	Kirkland_Manholes-843	340.26	Kirkland_Manholes-842	324.88	172	8.94	8	PVC	0.01	2,108	2	4	6	0.3		
Kirkland_Main-1405	Kirkland_Manholes-844	342.5	Kirkland_Manholes-845	341.21	161.2	0.8	8	PVC	0.01	631	2	4	6	0.9		
Kirkland_Main-1406	Kirkland_Manholes-846	342.07	Kirkland_Manholes-845	341.21	84.3	1.02	8	PVC	0.01	712	3	16	19	2.7		
Kirkland_Main-1407	Kirkland_Manholes-845	341.21	Kirkland_Manholes-850	340.39	138.4	0.59	8	PVC	0.01	543	5	24	29	5.4		
Kirkland_Main-1408	Kirkland_Manholes-849	342.42	Kirkland_Manholes-846	342.07	117.3	0.3	8	PVC	0.01	385	2	12	14	3.7		
Kirkland_Main-1409	Kirkland_Manholes-847	343.01	Kirkland_Manholes-849	342.42	70.3	0.84	8	PVC	0.01	646	2	8	10	1.6		
Kirkland_Main-1410	Kirkland_Manholes-848	344.32	Kirkland_Manholes-847	343.01	145.5	0.9	8	PVC	0.01	669	2	4	6	0.9		
Kirkland_Main-1411	Kirkland_Manholes-850	340.39	Kirkland_Manholes-851	339.16	69.3	1.78	8	PVC	0.01	941	6	28	34	3.6		
Kirkland_Main-1412	Kirkland_Manholes-1538	302.73	Kirkland_Manholes-1537	302.03	362.6	0.19	8	Concrete	0.013	238	6	16	22	9.3	SM14-Ex-EX124	
Kirkland_Main-1413	Kirkland_Manholes-1511	290.62	Kirkland_Manholes-1509	286.35	84.7	5.04	8	PVC	0.01	1,583	2	4	6	0.4		
Kirkland_Main-1414	Kirkland_Manholes-1510	287.19	Kirkland_Manholes-1509	286.35	79	1.06	8	PVC	0.01	727	1	4	5	0.7		
Kirkland_Main-1415	Kirkland_Manholes-1509	286.35	Kirkland_Manholes-1508	277.83	283.5	3.01	8	PVC	0.01	1,222	3	12	15	1.2		Drop Connection
Kirkland_Main-1416	Kirkland_Manholes-1537	302.03	Kirkland_Manholes-1536	298.86	351.3	0.9	8	Concrete	0.013	515	9	20	29	5.6	SM14-Ex-EX124	
Kirkland_Main-1417	Kirkland_Manholes-762	287.2	Kirkland_Manholes-763	274.33	165.6	7.77	8	Concrete	0.013	1,512	2	4	6	0.4	SM14-Ex-EX125	
Kirkland_Main-1418	Kirkland_Manholes-763	274.33	Kirkland_Manholes-1531	265.03	234.1	3.97	8	Concrete	0.013	1,081	4	8	12	1.1	SM14-Ex-EX125	
Kirkland_Main-1419	Kirkland_Manholes-1541	294.69	Kirkland_Manholes-1543	289	216.2	2.63	8	Concrete	0.013	880	6	16	22	2.4	SM14-Ex-EX123	
Kirkland_Main-1420	Kirkland_Manholes-1536	298.86	Kirkland_Manholes-1518	277.88	393.1	5.34	8	Concrete	0.013	1,253	10	24	34	2.7	SM14-Ex-EX124	
Kirkland_Main-1421	Kirkland_Manholes-1544	284.46	Kirkland_Manholes-1545	272.4	63.3	19.06	8	Concrete	0.013	2,367	9	24	32	1.4	SM14-Ex-EX123	
Kirkland_Main-1422	Kirkland_Manholes-1558	160.79	O-20	159.86	16.6	5.62	8	PVC	0.01	1,671	1	4	5	0.3		
Kirkland_Main-1424	Kirkland_Manholes-1557	161.32	O-21	159.86	64.6	2.26	8	PVC	0.01	1,060	2	8	10	0.9		
Kirkland_Main-1425	Kirkland_Manholes-1556	178.05	Kirkland_Manholes-1557	161.32	76.6	21.85	8	PVC	0.01	3,296	1	4	5	0.1		
Kirkland_Main-1427	Kirkland_Manholes-541	450.25	Kirkland_Manholes-542	440.69	230.2	4.15	8	PVC	0.01	1,437	8	68	76	5.3		
Kirkland_Main-1428	Kirkland_Manholes-542	440.69	Kirkland_Manholes-1978	440.32	89.3	0.41	8	PVC	0.01	454	9	72	80	17.7		
Kirkland_Main-1429	Kirkland_Manholes-544	449.4	Kirkland_Manholes-543	448.24	235	0.49	8	PVC	0.01	495	19	68	86	17.5		
Kirkland_Main-1430	Kirkland_Manholes-546	452.43	Kirkland_Manholes-545	450.22	300.2	0.74	8	PVC	0.01	605	15	60	75	12.4		
Kirkland_Main-1431	Kirkland_Manholes-545	450.22	Kirkland_Manholes-544	449.4	161.7	0.51	8	PVC	0.01	502	18	64	81	16.2		
Kirkland_Main-1432	Kirkland_Manholes-547	452.62	Kirkland_Manholes-546	452.43	162.6	0.12	8	PVC	0.01	243	13	56	69	28.4		
Kirkland_Main-1433	Kirkland_Manholes-548	453.36	Kirkland_Manholes-547	452.62	135.2	0.55	8	PVC	0.01	522	12	52	64	12.3		
Kirkland_Main-1434	Kirkland_Manholes-549	453.9	Kirkland_Manholes-548	453.36	128.1	0.42	8	PVC	0.01	456	11	40	50	11		
Kirkland_Main-1435	Kirkland_Manholes-552	455.6	Kirkland_Manholes-549	453.9	177.5	0.96	8	PVC	0.01	690	11	36	46	6.7		
Kirkland_Main-1436	Kirkland_Manholes-550	455.89	Kirkland_Manholes-552	455.6	183.6	0.16	8	PVC	0.01	280	1	4	5	1.7		
Kirkland_Main-1437	Kirkland_Manholes-551	462.06	Kirkland_Manholes-563	461.52	194.4	0.28	8	PVC	0.01	372	4	4	8	2.3		
Kirkland_Main-1438	Kirkland_Manholes-553	455.61	Kirkland_Manholes-552	455.6	92.3	0.01	8	PVC	0.01	73	10	28	37	50.9		
Kirkland_Main-1439	Kirkland_Manholes-554	456.45	Kirkland_Manholes-553	455.61	88.9	0.94	8	PVC	0.01	685	9	24	33	4.8		
Kirkland_Main-1440	Kirkland_Manholes-558	457.55	Kirkland_Manholes-554	456.45	287.7	0.38	8	PVC	0.01	436	7	16	23	5.2		
Kirkland_Main-1441	Kirkland_Manholes-557	460.23	Kirkland_Manholes-554	456.45	194.6	1.94	8	PVC	0.01	983	1	4	5	0.5		
Kirkland_Main-1442	Kirkland_Manholes-559	467.58	Kirkland_Manholes-558	457.55	209.6	4.79	8	PVC	0.01	1,542	2	4	6	0.4		
Kirkland_Main-1443	Kirkland_Manholes-563	461.52	Kirkland_Manholes-558	457.55	324.2	1.22	8	PVC	0.01	780	4	8	12	1.6		
Kirkland_Main-1444	Kirkland_Manholes-562	483.8	Kirkland_Manholes-560	483.4	99.9	0.4	8	PVC	0.01	446	1	4	5	1.2		
Kirkland_Main-1445	Kirkland_Manholes-565	468.54	Kirkland_Manholes-2020	468.34	312.4	0.06	10	PVC	0.01	326	74	143	217	66.5	SM14-2035-DF12	
Kirkland_Main-1446	Kirkland_Manholes-564	469.28	Kirkland_Manholes-565	468.54	228	0.32	10	PVC	0.01	728	73	139	213	29.2		
Kirkland_Main-1447	Kirkland_Manholes-567	470.28	Kirkland_Manholes-564	469.28	324.2	0.31	10	PVC	0.01	710	61	95	156	22		
Kirkland_Main-1448	Kirkland_Manholes-3045	483.35	Kirkland_Manholes-2029	479.06	297.6	1.44	8	PVC	0.01	846	2	8	10	1.2		
Kirkland_Main-1449	Kirkland_Manholes-568	471.29	Kirkland_Manholes-567	470.28	325	0.31	10	PVC	0.01	713	60	87	148	20.7		
Kirkland_Main-1450	Kirkland_Manholes-569	473.29	Kirkland_Manholes-568	471.29	178.4	1.12	10	PVC	0.01	1,354	60	83	143	10.6		
Kirkland_Main-1451	Kirkland_Manholes-570	473.5	Kirkland_Manholes-569	473.29	54.9	0.38	8	PVC	0.01	433	60	79	139	32.2		
Kirkland_Main-1452	Kirkland_Manholes-1406	473.57	Kirkland_Manholes-570	473.5	288.8	0.03	8	PVC	0.01	112	55	75	130	116.2	SM14-Ex-EX275	
Kirkland_Main-1453	Kirkland_Manholes-571	472.91	Kirkland_Manholes-567	470.28	172.6	1.52	8	PVC	0.01	870	0	4	4	0.5		
Kirkland_Main-1454	Kirkland_Manholes-575	113.73	Kirkland_Manholes-574	110.98	152.2	1.81	6	Concrete	0.013	338	2	8	10	2.9	SM14-Ex-EX116	
Kirkland_Main-1455	Kirkland_Manholes-1665	94.21	Kirkland_Manholes-1666	89.71	26.9	16.73	8	PVC	0.01	2,883	28	91	119	4.1		
Kirkland_Main-1456	Kirkland_Manholes-957	315.92	Kirkland_Manholes-958	300.6	184.6	8.3	8	PVC	0.01	2,031	3	20	23	1.1		
Kirkland_Main-1457	Kirkland_Manholes-958	300.6	Kirkland_Manholes-942	300.01	173	0.34	8	PVC	0.01	412	4	24	28	6.8		
Kirkland_Main-1458	Kirkland_Manholes-960	258.67	Kirkland_Manholes-959	252.05	190.9	3.47	8	PVC	0.01	1,313	2	4	6	0.5		

Existing - Peak Hour Flow - Pipe Capacity Table

Label	Upstream Node	Upstream Invert Elevation (ft)	Downstream Node	Downstream Invert Elevation (ft)	Length (ft)	Slope (%)	Diameter (in)	Material	Manning's n	Design Capacity (gpm)	Domestic Flow (gpm)	I/I Flow (gpm)	Total Flow (gpm)	Percent Full (%)	CIP No.	Notes
Kirkland_Main-1459	Kirkland_Manholes-2752	253.8	Kirkland_Manholes-959	252.05	339.9	0.51	8	PVC	0.01	506	9	34	44	8.6		
Kirkland_Main-1460	Kirkland_Manholes-959	252.05	Kirkland_Manholes-963	250.7	229	0.59	8	PVC	0.01	541	14	43	56	10.4		
Kirkland_Main-1461	Kirkland_Manholes-961	263.75	Kirkland_Manholes-962	249.53	185.7	7.66	8	PVC	0.01	1,951	2	4	6	0.3		
Kirkland_Main-1462	Kirkland_Manholes-964	266.7	Kirkland_Manholes-963	250.7	315.2	5.08	8	PVC	0.01	1,589	1	4	5	0.3		
Kirkland_Main-1463	Kirkland_Manholes-963	250.7	Kirkland_Manholes-962	249.53	229.2	0.51	8	PVC	0.01	504	17	51	68	13.5		
Kirkland_Main-1464	Kirkland_Manholes-962	249.53	Kirkland_Manholes-966	247.26	381	0.59	8	PVC	0.01	544	20	60	79	14.6		
Kirkland_Main-1465	Kirkland_Manholes-965	252.45	Kirkland_Manholes-966	247.26	188.4	2.75	8	PVC	0.01	1,170	2	4	6	0.6		
Kirkland_Main-1466	Kirkland_Manholes-966	247.26	Kirkland_Manholes-967	246.35	132.7	0.69	8	PVC	0.01	584	24	68	92	15.7		
Kirkland_Main-1467	Kirkland_Manholes-968	245.61	Kirkland_Manholes-969	239.3	150	4.21	8	PVC	0.01	1,446	0	4	5	0.3		
Kirkland_Main-1468	Kirkland_Manholes-969	239.3	Kirkland_Manholes-970	236.6	291.2	0.93	8	PVC	0.01	679	1	9	9	1.4		
Kirkland_Main-1469	Kirkland_Manholes-970	236.6	Kirkland_Manholes-971	236.2	92.8	0.43	8	PVC	0.01	463	2	13	15	3.2		
Kirkland_Main-1470	Kirkland_Manholes-967	246.35	Kirkland_Manholes-972	246.27	41.8	0.2	8	PVC	0.01	314	24	73	96	30.6		
Kirkland_Main-1471	Kirkland_Manholes-971	236.2	Kirkland_Manholes-973	233.19	134.5	2.24	8	Concrete	0.013	811	3	17	20	2.4	SM14-Ex-EX2	
Kirkland_Main-1472	Kirkland_Manholes-974	234.1	Kirkland_Manholes-973	233.19	211	0.43	8	PVC	0.01	463	2	9	10	2.2		
Kirkland_Main-1473	Kirkland_Manholes-987	239.5	Kirkland_Manholes-976	229.3	219.2	4.65	8	PVC	0.01	1,521	1	4	5	0.4		
Kirkland_Main-1474	Kirkland_Manholes-975	230.2	Kirkland_Manholes-976	229.3	22.7	3.96	8	PVC	0.01	1,404	5	34	39	2.8		
Kirkland_Main-1475	Kirkland_Manholes-973	233.19	Kirkland_Manholes-975	230.2	123.5	2.42	8	PVC	0.01	1,097	5	30	35	3.2		
Kirkland_Main-1476	Kirkland_Manholes-976	229.3	Kirkland_Manholes-977	225.95	181.2	1.85	8	PVC	0.01	959	7	43	49	5.1		
Kirkland_Main-1478	Kirkland_Manholes-1564	164.37	O-15	160	18.2	24.07	8	PVC	0.01	3,459	2	16	18	0.5		
Kirkland_Main-1479	Kirkland_Manholes-755	223.34	Kirkland_Manholes-1565	218.86	20.1	22.24	8	PVC	0.01	3,325	4	20	24	0.7		
Kirkland_Main-1480	Kirkland_Manholes-1567	133.87	Kirkland_Manholes-1566	130.52	314.6	1.06	8	Concrete	0.013	560	3	8	12	2.1	SM14-Ex-EX119	
Kirkland_Main-1481	Kirkland_Manholes-1566	130.52	Kirkland_Manholes-1604	117.22	313.5	4.24	8	Concrete	0.013	1,117	4	16	20	1.8	SM14-Ex-EX119	
Kirkland_Main-1482	Kirkland_Manholes-776	207.48	Kirkland_Manholes-775	172.73	191.1	18.19	8	PVC	0.01	3,007	5	28	33	1.1		
Kirkland_Main-1483	Kirkland_Manholes-1565	218.86	Kirkland_Manholes-776	207.48	52.1	21.84	8	PVC	0.01	3,295	4	24	28	0.8		
Kirkland_Main-1484	Kirkland_Manholes-1263	156.98	Kirkland_Manholes-1262	156.59	13.2	2.96	6	Concrete	0.013	433	0	8	8	1.9	SM14-Ex-EX111	
Kirkland_Main-1485	Kirkland_Manholes-1262	156.59	Kirkland_Manholes-1261	144.57	314.4	3.82	6	Concrete	0.013	492	4	41	46	9.3	SM14-Ex-EX111	
Kirkland_Main-1486	Kirkland_Manholes-1260	164.33	Kirkland_Manholes-1261	144.57	293.7	6.73	6	Concrete	0.013	653	2	8	10	1.5	SM14-Ex-EX110	
Kirkland_Main-1488	Kirkland_Manholes-1259	154.8	Kirkland_Manholes-1258	154.28	130.3	0.4	8	Concrete	0.013	343	6	33	39	11.5	SM14-Ex-EX108	
Kirkland_Main-1489	Kirkland_Manholes-1258	154.28	Kirkland_Manholes-1257	152.6	347	0.48	8	Concrete	0.013	377	13	66	79	20.9	SM14-Ex-EX108	
Kirkland_Main-1490	Kirkland_Manholes-1257	152.6	Kirkland_Manholes-1256	151.53	24	4.46	8	Concrete	0.013	1,146	14	74	88	7.7	SM14-Ex-EX108	
Kirkland_Main-1494	Kirkland_Manholes-2467	42.59	Kirkland_Manholes-2466	40.06	76.4	3.31	8	PVC	0.01	1,283	9	19	29	2.2		
Kirkland_Main-1495	Kirkland_Manholes-2469	49.1	Kirkland_Manholes-2467	42.59	138.2	4.71	8	PVC	0.01	1,530	8	13	21	1.3		
Kirkland_Main-1496	Kirkland_Manholes-2468	49.98	Kirkland_Manholes-2469	49.48	124.2	0.4	8	PVC	0.01	446	7	6	13	3		Drop Connection
Kirkland_Main-1498	Kirkland_Manholes-2470	236.6	Kirkland_Manholes-2472	223.64	225	5.76	8	Concrete	0.013	1,302	1	4	5	0.4	SM14-Ex-EX282	
Kirkland_Main-1499	Kirkland_Manholes-2472	223.64	Kirkland_Manholes-2473	222.78	215.8	0.4	8	Concrete	0.013	343	3	12	15	4.4	SM14-Ex-EX282	Drop Connection
Kirkland_Main-1500	Kirkland_Manholes-2473	207.49	Kirkland_Manholes-2474	188.45	212.3	8.97	8	Concrete	0.013	1,624	5	16	21	1.3	SM14-Ex-EX282	
Kirkland_Main-1501	Kirkland_Manholes-2471	234.47	Kirkland_Manholes-2472	223.64	364.1	2.97	8	Concrete	0.013	935	1	4	5	0.6	SM14-Ex-EX283	
Kirkland_Main-1502	Kirkland_Manholes-2474	188.45	Kirkland_Manholes-2476	187.5	225.3	0.42	8	Concrete	0.013	352	7	24	31	8.7	SM14-Ex-EX282	
Kirkland_Main-1505	Kirkland_Manholes-2492	55.46	Kirkland_Manholes-2666	55.28	147.8	0.12	12	Concrete	0.013	558	109	316	425	76.1	SM14-Ex-EX222	
Kirkland_Main-1506	Kirkland_Manholes-2088	57.39	Kirkland_Manholes-2492	55.46	144	1.34	12	Concrete	0.013	1,851	83	267	351	18.9	SM14-Ex-EX222	
Kirkland_Main-1507	Kirkland_Manholes-2090	57.44	Kirkland_Manholes-2088	57.39	370.9	0.01	12	Concrete	0.013	186	83	255	338	182.3	SM14-Ex-EX222	
Kirkland_Main-1508	Kirkland_Manholes-2089	58.23	Kirkland_Manholes-2088	57.39	14.1	5.97	8	PVC	0.01	1,723	0	6	6	0.4		
Kirkland_Main-1509	Kirkland_Manholes-2620	281.06	Kirkland_Manholes-2618	278.4	382.5	0.7	8	Concrete	0.013	452	2	8	10	2.2	SM14-Ex-EX299	
Kirkland_Main-1510	Kirkland_Manholes-2604	283.17	Kirkland_Manholes-2620	281.06	375.6	0.56	8	Concrete	0.013	406	1	4	5	1.1	SM14-Ex-EX299	
Kirkland_Main-1512	Kirkland_Manholes-2621	277.53	Kirkland_Manholes-2433	276.88	161.5	0.4	8	Concrete	0.013	343	1	4	5	1.5	SM14-Ex-EX244	Drop Connection
Kirkland_Main-1513	Kirkland_Manholes-2623	277.98	Kirkland_Manholes-2622	271.8	433.3	1.43	8	Concrete	0.013	648	1	4	5	0.7	SM14-Ex-EX281	
Kirkland_Main-1514	Kirkland_Manholes-2622	271.8	Kirkland_Manholes-2625	260.54	221.9	5.07	8	Concrete	0.013	1,222	1	8	9	0.8	SM14-Ex-EX281	
Kirkland_Main-1515	Kirkland_Manholes-2624	276.22	Kirkland_Manholes-2635	275.48	185.1	0.4	8	Concrete	0.013	343	1	4	5	1.3	SM14-Ex-EX294	
Kirkland_Main-1516	Kirkland_Manholes-2625	260.54	Kirkland_Manholes-2626	246.92	188.3	7.23	8	Concrete	0.013	1,458	2	12	14	0.9	SM14-Ex-EX281	
Kirkland_Main-1517	Kirkland_Manholes-2626	246.92	Kirkland_Manholes-2627	215.5	237.8	13.21	8	Concrete	0.013	1,971	2	16	18	0.9	SM14-Ex-EX281	
Kirkland_Main-1518	Kirkland_Manholes-2627	215.5	Kirkland_Manholes-2628	186	220.8	13.36	8	Concrete	0.013	1,983	4	20	24	1.2	SM14-Ex-EX281	
Kirkland_Main-1519	Kirkland_Manholes-2476	187.5	Kirkland_Manholes-2628	186	397.3	0.38	8	Concrete	0.013	333	9	28	37	11.1	SM14-Ex-EX282	
Kirkland_Main-1520	Kirkland_Manholes-2606	272.98	Kirkland_Manholes-2607	264.34	256.6	3.37	8	Concrete	0.013	995	2	4	6	0.6	SM14-Ex-EX298	
Kirkland_Main-1521	Kirkland_Manholes-2607	264.34	Kirkland_Manholes-2608	229.39	401.2	8.71	8	Concrete	0.013	1,601	5	8	13	0.8	SM14-Ex-EX298	Drop Connection
Kirkland_Main-1522	Kirkland_Manholes-2608	227.04	Kirkland_Manholes-2600	217.97	170.3	5.33	8	Concrete	0.013	1,252	6	12	18	1.4	SM14-Ex-EX298	
Kirkland_Main-1523	Kirkland_Manholes-2630	232.51	Kirkland_Manholes-2629	172.55	421	14.24	8	Concrete	0.013	2,047	9	20	29	1.4	SM14-Ex-EX295	
Kirkland_Main-1524	Kirkland_Manholes-1219	264.33	Kirkland_Manholes-1139	247.37	248	6.84	6	Concrete	0.013	659	1	8	9	1.4	SM14-Ex-EX80	
Kirkland_Main-1525	Kirkland_Manholes-1139	247.37	Kirkland_Manholes-1138	221.13	248.6	10.56	6	Concrete	0.013	818	2	16	19	2.3	SM14-Ex-EX80	
Kirkland_Main-1526	Kirkland_Manholes-1138	221.13	Kirkland_Manholes-1141	204.1	177.9	9.57	6	Concrete	0.013	779	3	25	28	3.6	SM14-Ex-EX80	
Kirkland_Main-1527	Kirkland_Manholes-1152	135.47	Kirkland_Manholes-1811	129.72	351.2	1.64	6	Concrete	0.013	322	10	74	84	26.1	SM10	
Kirkland_Main-1528	Kirkland_Manholes-1153	137.55	Kirkland_Manholes-1154	131.73	270.2	2.15	6	Concrete	0.013	370	2	8	10	2.7	SM10	
Kirkland_Main-1529	Kirkland_Manholes-1154	131.73	Kirkland_Manholes-1155	122.09	288.9	3.34	6	Concrete	0.013	460	2	16	19	4.1	SM10	

Existing - Peak Hour Flow - Pipe Capacity Table

Label	Upstream Node	Upstream Invert Elevation (ft)	Downstream Node	Downstream Invert Elevation (ft)	Length (ft)	Slope (%)	Diameter (in)	Material	Manning's n	Design Capacity (gpm)	Domestic Flow (gpm)	I/I Flow (gpm)	Total Flow (gpm)	Percent Full (%)	CIP No.	Notes
Kirkland_Main-1530	Kirkland_Manholes-1155	122.09	Kirkland_Manholes-1156	108.19	328.7	4.23	6	Concrete	0.013	518	3	25	28	5.4	SM10	
Kirkland_Main-1531	Kirkland_Manholes-1156	108.19	Kirkland_Manholes-1157	99.29	118.4	7.51	6	Concrete	0.013	690	4	33	37	5.4	SM10	
Kirkland_Main-1532	Kirkland_Manholes-1157	99.29	Kirkland_Manholes-1159	82.66	203.9	8.16	6	Concrete	0.013	719	9	66	74	10.4	SM10	
Kirkland_Main-1533	Kirkland_Manholes-1159	82.66	Kirkland_Manholes-1160	77.11	29.4	18.89	8	PVC	0.01	3,064	10	74	84	2.7		
Kirkland_Main-1534	Kirkland_Manholes-1158	124.93	Kirkland_Manholes-1157	99.29	160.8	15.95	6	Concrete	0.013	1,006	4	25	28	2.8	SM10	
Kirkland_Main-1535	Kirkland_Manholes-1162	78.51	Kirkland_Manholes-1160	77.11	390.4	0.36	15	PVC	0.01	2,257	67	420	770	34.1		
Kirkland_Main-1536	Kirkland_Manholes-1179	123.76	Kirkland_Manholes-1163	96.51	315	8.65	8	Concrete	0.013	1,595	38	165	203	12.7	SM10	
Kirkland_Main-1537	Kirkland_Manholes-1163	96.51	Kirkland_Manholes-1161	78.67	122.8	14.53	8	Concrete	0.013	2,067	45	222	267	12.9	SM14-Ex-EX77	
Kirkland_Main-1538	Kirkland_Manholes-1164	119.66	Kirkland_Manholes-1163	96.51	338.6	6.84	6	Concrete	0.013	658	6	49	56	8.4	SM10	
Kirkland_Main-1539	Kirkland_Manholes-1165	133.24	Kirkland_Manholes-1164	119.66	224	6.06	6	Concrete	0.013	620	5	41	47	7.5	SM10	
Kirkland_Main-1540	Kirkland_Manholes-1166	151.97	Kirkland_Manholes-1165	133.24	158.7	11.8	6	Concrete	0.013	865	1	8	9	1.1	SM10	
Kirkland_Main-1541	Kirkland_Manholes-1167	140.51	Kirkland_Manholes-1165	133.24	127.8	5.69	6	Concrete	0.013	601	4	25	29	4.8	SM10	
Kirkland_Main-1542	Kirkland_Manholes-1168	149.52	Kirkland_Manholes-1167	140.51	328.4	2.74	6	Concrete	0.013	417	3	16	20	4.7	SM10	
Kirkland_Main-1543	Kirkland_Manholes-1169	156.83	Kirkland_Manholes-1168	149.52	316.3	2.31	6	Concrete	0.013	383	1	8	10	2.5	SM10	
Kirkland_Main-1544	Kirkland_Manholes-662	248.07	Kirkland_Manholes-651	247.63	225.4	0.2	15	PVC	0.01	1,665	231	1,013	1,244	74.7	SM14-2035-DF9	
Kirkland_Main-1545	Kirkland_Manholes-653	238.2	Kirkland_Manholes-639	237.89	305.4	0.1	21	PVC	0.01	2,946	207	477	683	23.2		
Kirkland_Main-1546	Kirkland_Manholes-654	239.59	Kirkland_Manholes-653	238.2	298.1	0.47	21	PVC	0.01	6,313	206	473	679	10.8		
Kirkland_Main-1547	Kirkland_Manholes-655	240	Kirkland_Manholes-654	239.59	255.9	0.16	21	PVC	0.01	3,700	205	469	674	18.2		Drop Connection
Kirkland_Main-1548	Kirkland_Manholes-1574	241.8	Kirkland_Manholes-657	241.69	265.5	0.04	21	PVC	0.01	1,882	204	457	661	35.1		
Kirkland_Main-1549	Kirkland_Manholes-657	241.69	Kirkland_Manholes-656	240.1	132.5	1.2	21	PVC	0.01	10,129	204	461	665	6.6		
Kirkland_Main-1550	Kirkland_Manholes-656	240.1	Kirkland_Manholes-655	240	131.8	0.08	21	PVC	0.01	2,546	204	465	669	26.3		Drop Connection
Kirkland_Main-1551	Kirkland_Manholes-658	246.8	Kirkland_Manholes-659	246.11	66.6	1.04	8	PVC	0.01	718	1	12	12	1.7		
Kirkland_Main-1552	Kirkland_Manholes-660	246.84	Kirkland_Manholes-659	246.11	57.6	1.27	8	PVC	0.01	793	2	4	6	0.8		
Kirkland_Main-1553	Kirkland_Manholes-659	246.11	Kirkland_Manholes-661	245.17	89.4	1.05	8	PVC	0.01	723	3	20	23	3.1		
Kirkland_Main-1554	Kirkland_Manholes-651	247.63	Kirkland_Manholes-645	243.42	262.6	1.6	15	PVC	0.01	4,772	232	1,017	1,249	26.2	SM14-2035-DF9	
Kirkland_Main-1555	Kirkland_Manholes-652	251.94	Kirkland_Manholes-662	248.07	324.4	1.19	15	PVC	0.01	4,116	231	1,009	1,240	30.1	SM14-2035-DF9	
Kirkland_Main-1556	Kirkland_Manholes-664	268.55	Kirkland_Manholes-663	252.67	383.8	4.14	8	PVC	0.01	1,434	1	4	5	0.3		
Kirkland_Main-1557	Kirkland_Manholes-663	252.67	Kirkland_Manholes-652	251.94	362.7	0.2	15	PVC	0.01	1,691	230	1,005	1,236	73.1	SM14-2035-DF9	
Kirkland_Main-1558	Kirkland_Manholes-666	254.95	Kirkland_Manholes-665	253.2	321.8	0.54	15	PVC	0.01	2,780	207	898	1,105	39.8		
Kirkland_Main-1559	Kirkland_Manholes-665	253.2	Kirkland_Manholes-663	252.67	360.1	0.15	15	PVC	0.01	1,446	228	997	1,225	84.7	SM14-Ex-EX135	
Kirkland_Main-1560	Kirkland_Manholes-668	260.28	Kirkland_Manholes-667	256.8	251.1	1.39	8	PVC	0.01	830	3	4	7	0.9		
Kirkland_Main-1561	Kirkland_Manholes-667	256.8	Kirkland_Manholes-665	253.2	386.9	0.93	8	PVC	0.01	680	18	95	114	16.7		
Kirkland_Main-1562	Kirkland_Manholes-669	262.97	Kirkland_Manholes-667	256.8	300.6	2.05	8	PVC	0.01	1,010	13	87	101	10		
Kirkland_Main-1563	Kirkland_Manholes-671	267.47	Kirkland_Manholes-670	264.24	114.1	2.83	8	PVC	0.01	1,186	7	24	31	2.6		
Kirkland_Main-1564	Kirkland_Manholes-672	266.2	Kirkland_Manholes-670	264.24	209.3	0.94	8	PVC	0.01	682	6	56	61	9		
Kirkland_Main-1565	Kirkland_Manholes-670	264.24	Kirkland_Manholes-669	262.97	88.5	1.43	8	PVC	0.01	844	13	83	96	11.4		
Kirkland_Main-1567	Kirkland_Manholes-676	280.09	Kirkland_Manholes-674	276.15	217.6	1.81	8	PVC	0.01	949	3	4	7	0.7		
Kirkland_Main-1568	Kirkland_Manholes-674	276.15	Kirkland_Manholes-675	275.52	20.5	3.07	8	PVC	0.01	1,235	5	16	21	1.7		
Kirkland_Main-1569	Kirkland_Manholes-673	281.46	Kirkland_Manholes-674	276.15	196.8	2.7	8	PVC	0.01	1,158	1	8	9	0.8		
Kirkland_Main-1570	Kirkland_Manholes-675	275.52	Kirkland_Manholes-671	267.47	256.7	3.14	8	PVC	0.01	1,249	6	20	25	2		
Kirkland_Main-1571	Kirkland_Manholes-677	287.02	Kirkland_Manholes-673	281.46	185.8	2.99	8	PVC	0.01	1,220	1	4	5	0.4		
Kirkland_Main-1572	Kirkland_Manholes-1728	26.2	Kirkland_Manholes-1729	25.06	120.1	0.95	12	PVC	0.01	2,026	69	58	127	6.3		
Kirkland_Main-1573	Kirkland_Manholes-1727	26.48	Kirkland_Manholes-1728	26.2	59.2	0.47	8	PVC	0.01	485	39	33	72	14.8		
Kirkland_Main-1574	Kirkland_Manholes-1724	26.68	Kirkland_Manholes-1727	26.48	122.2	0.16	8	PVC	0.01	285	39	25	63	22.3		
Kirkland_Main-1575	Kirkland_Manholes-1725	28.56	Kirkland_Manholes-1724	26.68	150.5	1.25	8	PVC	0.01	788	21	16	38	4.8		
Kirkland_Main-1576	Kirkland_Manholes-1726	29.93	Kirkland_Manholes-1725	28.56	57.1	2.4	8	PVC	0.01	1,092	7	8	16	1.4		
Kirkland_Main-1577	Kirkland_Manholes-1650	145.43	Kirkland_Manholes-1711	136.47	206.1	4.35	10	Concrete	0.013	2,050	9	66	75	3.6	SM14-Ex-EX196	
Kirkland_Main-1578	Kirkland_Manholes-1751	37.07	Kirkland_Manholes-1750	33.34	26	14.35	6	PVC	0.01	1,240	0	8	8	0.7	SM14-Ex-EX164	
Kirkland_Main-1580	Kirkland_Manholes-2722	21	Kirkland_Manholes-3100	18.3	194.6	1.39	12	Concrete	0.013	1,884	88	61	149	7.9	SM14-Ex-EX289	
Kirkland_Main-1585	Kirkland_Manholes-1750	33.34	Kirkland_Manholes-1749	32.74	150.9	0.4	8	PVC	0.01	446	1	16	18	4		Drop Connection
Kirkland_Main-1586	Kirkland_Manholes-1749	30.51	Kirkland_Manholes-1745	27.57	191.8	1.53	8	PVC	0.01	873	1	25	26	3		
Kirkland_Main-1587	Kirkland_Manholes-1744	27.68	Kirkland_Manholes-1745	27.57	23.9	0.46	8	PVC	0.01	479	0	8	8	1.7		
Kirkland_Main-1588	Kirkland_Manholes-1955	335.45	Kirkland_Manholes-1958	324.88	118.1	8.95	8	PVC	0.01	2,109	8	12	20	1		
Kirkland_Main-1589	Kirkland_Manholes-1958	324.88	Kirkland_Manholes-1939	324.34	135.7	0.4	8	PVC	0.01	446	8	20	28	6.4		
Kirkland_Main-1590	Kirkland_Manholes-1959	325.55	Kirkland_Manholes-1958	324.88	167.8	0.4	8	PVC	0.01	446	0	4	4	0.9		
Kirkland_Main-1591	Kirkland_Manholes-1960	312.18	Kirkland_Manholes-1892	301.26	279	3.91	8	PVC	0.01	1,395	0	4	4	0.3		
Kirkland_Main-1592	Kirkland_Manholes-1962	345.61	Kirkland_Manholes-1961	341.24	157.8	2.77	8	PVC	0.01	1,173	13	4	17	1.5		
Kirkland_Main-1593	Kirkland_Manholes-1961	341.24	Kirkland_Manholes-1964	341.08	188.7	0.08	8	PVC	0.01	205	24	64	88	42.8		
Kirkland_Main-1594	Kirkland_Manholes-1964	341.08	Kirkland_Manholes-1963	340.77	13.1	2.37	8	PVC	0.01	1,085	53	91	145	13.3		
Kirkland_Main-1595	Kirkland_Manholes-1965	345.05	Kirkland_Manholes-1964	341.08	103.3	3.84	8	PVC	0.01	1,382	29	24	53	3.8		
Kirkland_Main-1596	Kirkland_Manholes-1967	421.47	Kirkland_Manholes-1966	418.21	134.2	2.43	8	Concrete	0.013	845	28	155	183	21.7	SM14-Ex-EX216	
Kirkland_Main-1597	Kirkland_Manholes-1968	421.67	Kirkland_Manholes-1967	421.47	23.9	0.84	8	PVC	0.01	646	28	151	179	27.7		

Existing - Peak Hour Flow - Pipe Capacity Table

Label	Upstream Node	Upstream Invert Elevation (ft)	Downstream Node	Downstream Invert Elevation (ft)	Length (ft)	Slope (%)	Diameter (in)	Material	Manning's n	Design Capacity (gpm)	Domestic Flow (gpm)	I/I Flow (gpm)	Total Flow (gpm)	Percent Full (%)	CIP No.	Notes
Kirkland_Main-1598	Kirkland_Manholes-1969	423.5	Kirkland_Manholes-1968	421.67	353.5	0.52	8	PVC	0.01	507	26	147	173	34.1		
Kirkland_Main-1599	Kirkland_Manholes-1970	425.5	Kirkland_Manholes-1969	423.5	200.6	1	8	PVC	0.01	704	3	16	19	2.7		
Kirkland_Main-1600	Kirkland_Manholes-1974	432	Kirkland_Manholes-1969	423.5	272.7	3.12	8	PVC	0.01	1,245	22	127	149	12		
Kirkland_Main-1601	Kirkland_Manholes-1971	425.8	Kirkland_Manholes-1970	425.5	74.8	0.4	8	PVC	0.01	446	2	12	14	3.2		
Kirkland_Main-1602	Kirkland_Manholes-1972	426.31	Kirkland_Manholes-1971	425.8	127.8	0.4	8	PVC	0.01	446	2	8	10	2.2		
Kirkland_Main-1603	Kirkland_Manholes-1973	430.86	Kirkland_Manholes-1972	426.31	87.6	5.19	8	PVC	0.01	1,607	1	4	4	0.3		
Kirkland_Main-1604	Kirkland_Manholes-2631	265.77	Kirkland_Manholes-2630	232.51	349	9.53	8	Concrete	0.013	1,674	6	16	22	1.3	SM14-Ex-EX295	
Kirkland_Main-1605	Kirkland_Manholes-2632	276.84	Kirkland_Manholes-2631	265.77	241.2	4.59	8	Concrete	0.013	1,162	4	12	15	1.3	SM14-Ex-EX295	
Kirkland_Main-1606	Kirkland_Manholes-2649	147.51	Kirkland_Manholes-2648	144.73	165.5	1.68	8	PVC	0.01	914	2	12	14	1.6		
Kirkland_Main-1607	Kirkland_Manholes-2648	144.73	Kirkland_Manholes-2647	132.46	109.5	11.21	8	PVC	0.01	2,360	3	18	21	0.9		
Kirkland_Main-1608	Kirkland_Manholes-2647	132.46	Kirkland_Manholes-2646	96.97	134.3	26.42	8	PVC	0.01	3,624	4	24	28	0.8		
Kirkland_Main-1609	Kirkland_Manholes-2646	96.97	Kirkland_Manholes-2645	79.04	111.3	16.11	8	PVC	0.01	2,830	6	30	36	1.3		
Kirkland_Main-1610	Kirkland_Manholes-2650	148.19	Kirkland_Manholes-2649	147.51	170.3	0.4	8	PVC	0.01	446	1	6	7	1.6		
Kirkland_Main-1611	Kirkland_Manholes-2651	121.43	Kirkland_Manholes-2652	57.18	251.5	25.55	6	PVC	0.01	1,655	2	6	8	0.5	SM14-Ex-EX292	
Kirkland_Main-1612	Kirkland_Manholes-2654	54.76	Kirkland_Manholes-2657	43.64	394.5	2.82	8	Concrete	0.013	911	3	24	27	3	SM14-Ex-EX291	
Kirkland_Main-1613	Kirkland_Manholes-2653	56.99	Kirkland_Manholes-2654	54.76	13.8	16.21	6	Concrete	0.013	1,014	3	18	21	2.1	SM14-Ex-EX292	
Kirkland_Main-1614	Kirkland_Manholes-2652	57.18	Kirkland_Manholes-2653	56.99	47.7	0.4	6	PVC	0.01	207	3	12	15	7.4	SM14-Ex-EX292	
Kirkland_Main-1615	Kirkland_Manholes-2657	43.64	Kirkland_Manholes-2656	33.93	250	3.88	8	Concrete	0.013	1,069	4	30	35	3.2	SM14-Ex-EX291	
Kirkland_Main-1616	Kirkland_Manholes-2655	44.22	Kirkland_Manholes-2656	33.93	73.2	14.06	6	Concrete	0.013	944	13	79	92	9.7	SM14-Ex-EX293	
Kirkland_Main-1617	Kirkland_Manholes-2656	33.93	Kirkland_Manholes-2658	29.62	118.6	3.63	8	Concrete	0.013	1,034	17	115	132	12.8	SM14-Ex-EX291	
Kirkland_Main-1618	Kirkland_Manholes-2658	29.62	Kirkland_Manholes-2659	28.05	312.8	0.5	8	Concrete	0.013	384	17	121	139	36.1	SM14-Ex-EX291	
Kirkland_Main-1619	Kirkland_Manholes-2659	28.05	Kirkland_Manholes-2660	26.87	281	0.42	8	Concrete	0.013	351	19	128	146	41.6	SM14-Ex-EX291	
Kirkland_Main-1624	Kirkland_Manholes-2726	12.39	Kirkland_Manholes-2662	11.52	172.8	0.5	18	Concrete	0.013	3,345	229	595	824	24.6	SM14-Ex-EX289	
Kirkland_Main-1625	Kirkland_Manholes-2666	55.28	Kirkland_Manholes-2667	55.1	203.4	0.09	12	Concrete	0.013	476	109	322	431	90.6	SM14-Ex-EX222	
Kirkland_Main-1626	Kirkland_Manholes-2667	55.1	Kirkland_Manholes-2665	53.92	196.9	0.6	12	Concrete	0.013	1,238	109	328	437	35.3	SM14-Ex-EX222	
Kirkland_Main-1627	Kirkland_Manholes-2665	53.92	Kirkland_Manholes-3102	53.77	398.5	0.04	12	Concrete	0.013	310	109	334	443	142.8	SM14-Ex-EX222	
Kirkland_Main-1629	Kirkland_Manholes-2203	62.94	Kirkland_Manholes-3102	53.77	55.2	16.62	8	Ductile Iron	0.012	2,395	12	61	73	3	SM14-Ex-EX290	
Kirkland_Main-1633	Kirkland_Manholes-3101	52.44	Kirkland_Manholes-2663	50.64	51.5	3.5	12	Concrete	0.013	2,991	124	431	555	18.6	SM14-Ex-EX222	
Kirkland_Main-1634	Kirkland_Manholes-250	115.74	Kirkland_Manholes-268	108.82	144.1	4.8	8	sbestos Ceme	0.011	1,405	4	17	21	1.5	SM10	
Kirkland_Main-1635	Kirkland_Manholes-309	140.9	Kirkland_Manholes-308	114.39	431.7	6.14	8	Concrete	0.013	1,344	3	9	12	0.9	SM10	
Kirkland_Main-1636	Kirkland_Manholes-308	114.39	Kirkland_Manholes-307	105.6	319	2.76	8	Concrete	0.013	900	6	27	33	3.6	SM10	
Kirkland_Main-1637	Kirkland_Manholes-494	135.66	Kirkland_Manholes-307	105.6	436.1	6.89	8	Concrete	0.013	1,424	3	9	12	0.8	SM10	
Kirkland_Main-1638	Kirkland_Manholes-241	14.7	Kirkland_Manholes-2765	13.19	59.4	2.54	8	Ductile Iron	0.012	936	305	1,122	1,428	152.5	SM3	
Kirkland_Main-1639	Kirkland_Manholes-240	17.1	Kirkland_Manholes-2765	13.19	342.3	1.14	8	Ductile Iron	0.012	628	140	420	861	137.1	SM14-Ex-EX42	
Kirkland_Main-1640	Kirkland_Manholes-239	27.77	Kirkland_Manholes-240	17.1	321.9	3.31	8	Ductile Iron	0.012	1,070	140	416	857	80.1	SM14-Ex-EX42	
Kirkland_Main-1641	Kirkland_Manholes-243	37.12	Kirkland_Manholes-239	27.77	158.7	5.89	8	Concrete	0.013	1,317	139	407	847	64.3	SM14-Ex-EX38	
Kirkland_Main-1642	Kirkland_Manholes-244	47.57	Kirkland_Manholes-243	46.95	154.8	0.4	8	Concrete	0.013	343	137	403	841	245.2	SM14-Ex-EX38	Drop Connection
Kirkland_Main-1643	Kirkland_Manholes-246	58	Kirkland_Manholes-244	47.57	272.3	3.83	8	Concrete	0.013	1,061	137	399	837	78.8	SM14-Ex-EX38	
Kirkland_Main-1645	Kirkland_Manholes-901	304.32	Kirkland_Manholes-900	302.97	52	2.59	8	PVC	0.01	1,135	1	4	5	0.4		
Kirkland_Main-1646	Kirkland_Manholes-902	304.94	Kirkland_Manholes-900	302.97	236.8	0.83	8	PVC	0.01	643	1	4	5	0.7		
Kirkland_Main-1647	Kirkland_Manholes-900	302.97	Kirkland_Manholes-904	289.03	425.5	3.28	8	PVC	0.01	1,276	5	24	29	2.3		
Kirkland_Main-1648	Kirkland_Manholes-903	290.15	Kirkland_Manholes-904	289.03	62.2	1.8	8	PVC	0.01	946	11	60	71	7.5		
Kirkland_Main-1649	Kirkland_Manholes-904	289.03	Kirkland_Manholes-905	283.61	138.2	3.92	8	PVC	0.01	1,396	16	87	104	7.4		
Kirkland_Main-1650	Kirkland_Manholes-905	283.61	Kirkland_Manholes-912	277.93	121.5	4.68	8	PVC	0.01	1,525	16	91	108	7.1		
Kirkland_Main-1651	Kirkland_Manholes-906	293.01	Kirkland_Manholes-907	291.52	150.3	0.99	8	PVC	0.01	702	4	40	44	6.3		
Kirkland_Main-1652	Kirkland_Manholes-907	291.52	Kirkland_Manholes-908	290.53	109.9	0.9	8	PVC	0.01	669	5	44	49	7.3		
Kirkland_Main-1653	Kirkland_Manholes-908	290.53	Kirkland_Manholes-903	290.15	324	0.12	8	PVC	0.01	241	10	56	65	27.1		
Kirkland_Main-1654	Kirkland_Manholes-910	293.95	Kirkland_Manholes-908	290.53	193.3	1.77	8	PVC	0.01	938	4	8	12	1.3		
Kirkland_Main-1655	Kirkland_Manholes-909	297.88	Kirkland_Manholes-910	293.95	188.4	2.09	8	PVC	0.01	1,018	3	4	7	0.7		
Kirkland_Main-1656	Kirkland_Manholes-911	279.8	Kirkland_Manholes-912	277.93	207.2	0.9	8	PVC	0.01	670	2	4	6	0.9		
Kirkland_Main-1657	Kirkland_Manholes-912	277.93	Kirkland_Manholes-913	274.64	100.2	3.28	8	PVC	0.01	1,277	20	99	119	9.3		
Kirkland_Main-1658	Kirkland_Manholes-913	274.64	Kirkland_Manholes-917	265.16	288.9	3.28	8	PVC	0.01	1,277	21	103	124	9.7		
Kirkland_Main-1659	Kirkland_Manholes-890	280.21	Kirkland_Manholes-914	274.6	210.2	2.67	8	PVC	0.01	1,152	27	115	142	12.3		
Kirkland_Main-1660	Kirkland_Manholes-914	274.6	Kirkland_Manholes-915	272.06	86.6	2.93	8	PVC	0.01	1,207	30	127	157	13		
Kirkland_Main-1661	Kirkland_Manholes-915	272.06	Kirkland_Manholes-916	270.65	45.7	3.08	8	PVC	0.01	1,238	30	131	161	13		
Kirkland_Main-1662	Kirkland_Manholes-627	275.98	Kirkland_Manholes-914	274.6	212.1	0.65	8	PVC	0.01	569	2	8	10	1.8		
Kirkland_Main-1663	Kirkland_Manholes-916	270.65	Kirkland_Manholes-917	265.16	154.3	3.56	8	PVC	0.01	1,330	30	135	166	12.4		
Kirkland_Main-1664	Kirkland_Manholes-917	265.16	Kirkland_Manholes-918	264.4	332.4	0.23	8	PVC	0.01	337	52	246	299	88.6	SM14-Ex-EX136	
Kirkland_Main-1665	Kirkland_Manholes-918	264.4	Kirkland_Manholes-919	263.89	50.1	1.02	8	PVC	0.01	711	53	250	303	42.6	SM14-Ex-EX136	
Kirkland_Main-1666	Kirkland_Manholes-919	263.89	Kirkland_Manholes-920	263.16	175.4	0.42	8	PVC	0.01	455	53	254	307	67.6	SM14-Ex-EX136	
Kirkland_Main-1667	Kirkland_Manholes-687	264	Kirkland_Manholes-921	262.87	223.9	0.5	8	PVC	0.01	501	4	12	16	3.1		
Kirkland_Main-1668	Kirkland_Manholes-920	263.16	Kirkland_Manholes-921	262.87	116.1	0.25	8	PVC	0.01	352	54	258	312	88.5	SM14-Ex-EX136	

Existing - Peak Hour Flow - Pipe Capacity Table

Label	Upstream Node	Upstream Invert Elevation (ft)	Downstream Node	Downstream Invert Elevation (ft)	Length (ft)	Slope (%)	Diameter (in)	Material	Manning's n	Design Capacity (gpm)	Domestic Flow (gpm)	I/I Flow (gpm)	Total Flow (gpm)	Percent Full (%)	CIP No.	Notes
Kirkland_Main-1669	Kirkland_Manholes-2064	426.84	Kirkland_Manholes-2670	399.73	295.3	9.18	8	PVC	0.01	2,136	1	4	5	0.2		
Kirkland_Main-1670	Kirkland_Manholes-921	262.87	Kirkland_Manholes-940	262.57	126.3	0.24	8	PVC	0.01	344	58	274	332	96.6	SM14-Ex-EX136	
Kirkland_Main-1671	Kirkland_Manholes-940	262.57	Kirkland_Manholes-939	261.56	302.2	0.33	8	PVC	0.01	407	61	278	339	83.4	SM14-Ex-EX136	
Kirkland_Main-1672	Kirkland_Manholes-939	261.56	Kirkland_Manholes-938	261.15	139.9	0.29	8	PVC	0.01	382	62	282	344	90.1	SM14-Ex-EX136	Drop Connection
Kirkland_Main-1673	Kirkland_Manholes-925	289.69	Kirkland_Manholes-924	268.15	361.6	5.96	8	PVC	0.01	1,721	13	60	73	4.2		
Kirkland_Main-1674	Kirkland_Manholes-924	268.15	Kirkland_Manholes-923	268.09	97.9	0.06	12	PVC	0.01	515	122	489	610	118.6	SM14-Ex-EX138	
Kirkland_Main-1675	Kirkland_Manholes-922	269.99	Kirkland_Manholes-923	268.09	235	0.81	8	PVC	0.01	634	1	4	5	0.7		
Kirkland_Main-1676	Kirkland_Manholes-923	268.09	Kirkland_Manholes-929	267.98	60	0.18	12	PVC	0.01	890	123	497	619	69.6	SM14-2035-DF10	
Kirkland_Main-1678	Kirkland_Manholes-927	307.71	Kirkland_Manholes-926	302.74	56.6	8.77	8	PVC	0.01	2,089	6	8	14	0.7		
Kirkland_Main-1679	Kirkland_Manholes-926	302.74	Kirkland_Manholes-925	289.69	296	4.41	8	PVC	0.01	1,481	12	56	68	4.6		
Kirkland_Main-1680	Kirkland_Manholes-928	294.43	Kirkland_Manholes-930	277.33	346.1	4.94	8	PVC	0.01	1,567	2	4	6	0.4		
Kirkland_Main-1681	Kirkland_Manholes-930	277.33	Kirkland_Manholes-929	267.98	33.8	27.65	8	PVC	0.01	3,707	3	8	11	0.3		
Kirkland_Main-1682	Kirkland_Manholes-933	269.3	Kirkland_Manholes-932	267	200	1.15	8	PVC	0.01	756	2	4	6	0.8		
Kirkland_Main-1683	Kirkland_Manholes-929	267.98	Kirkland_Manholes-931	267.3	153.6	0.44	12	PVC	0.01	1,383	126	509	635	45.9		
Kirkland_Main-1684	Kirkland_Manholes-931	267.3	Kirkland_Manholes-932	267	103.9	0.29	12	PVC	0.01	1,117	126	513	639	57.2		
Kirkland_Main-1685	Kirkland_Manholes-932	267	Kirkland_Manholes-934	266.31	201.7	0.34	12	PVC	0.01	1,216	129	521	649	53.4		
Kirkland_Main-1686	Kirkland_Manholes-950	293.99	Kirkland_Manholes-934	266.31	270.7	10.22	8	PVC	0.01	2,254	5	32	37	1.6		
Kirkland_Main-1688	Kirkland_Manholes-934	266.31	Kirkland_Manholes-935	265.1	223.8	0.54	12	PVC	0.01	1,529	136	556	692	45.3		
Kirkland_Main-1689	Kirkland_Manholes-937	264.43	Kirkland_Manholes-938	264.12	49.3	0.62	12	PVC	0.01	1,641	143	608	751	45.8		Drop Connection
Kirkland_Main-1690	Kirkland_Manholes-936	264.57	Kirkland_Manholes-937	264.43	21.7	0.66	12	PVC	0.01	1,686	137	564	701	41.6		
Kirkland_Main-1691	Kirkland_Manholes-935	265.1	Kirkland_Manholes-936	264.57	71.3	0.74	12	PVC	0.01	1,788	137	560	697	39		
Kirkland_Main-1692	Kirkland_Manholes-938	257.09	Kirkland_Manholes-666	254.95	392.8	0.55	15	PVC	0.01	2,784	206	894	1,100	39.5		
Kirkland_Main-1693	Kirkland_Manholes-941	287.52	Kirkland_Manholes-937	264.43	281.4	8.21	8	PVC	0.01	2,020	6	40	46	2.3		
Kirkland_Main-1694	Kirkland_Manholes-942	300.01	Kirkland_Manholes-941	287.52	399.1	3.13	8	PVC	0.01	1,247	5	36	41	3.3		
Kirkland_Main-1695	Kirkland_Manholes-943	306.11	Kirkland_Manholes-944	304.9	190.1	0.64	8	Concrete	0.013	433	1	4	5	1.1	SM14-Ex-EX137	
Kirkland_Main-1696	Kirkland_Manholes-946	335.98	Kirkland_Manholes-945	330.63	152.5	3.51	8	PVC	0.01	1,321	1	4	5	0.4		
Kirkland_Main-1697	Kirkland_Manholes-945	330.63	Kirkland_Manholes-944	304.9	238	10.81	8	PVC	0.01	2,318	2	8	10	0.4		
Kirkland_Main-1698	Kirkland_Manholes-947	299.2	Kirkland_Manholes-948	296.38	132	2.14	8	Concrete	0.013	793	1	4	5	0.6	SM14-Ex-EX137	
Kirkland_Main-1699	Kirkland_Manholes-944	304.9	Kirkland_Manholes-948	296.38	218.3	3.9	8	Concrete	0.013	1,071	3	16	19	1.7	SM14-Ex-EX137	
Kirkland_Main-1701	Kirkland_Manholes-949	295.21	Kirkland_Manholes-950	293.99	49	2.49	8	PVC	0.01	1,112	4	28	32	2.9		
Kirkland_Main-1702	Kirkland_Manholes-948	296.38	Kirkland_Manholes-949	295.21	143.9	0.81	8	Concrete	0.013	489	4	24	28	5.7	SM14-Ex-EX137	
Kirkland_Main-1703	Kirkland_Manholes-951	321.2	Kirkland_Manholes-942	300.01	232.8	9.1	8	PVC	0.01	2,127	1	8	9	0.4		
Kirkland_Main-1704	Kirkland_Manholes-952	325.62	Kirkland_Manholes-951	321.2	323.7	1.37	8	PVC	0.01	824	1	4	5	0.6		
Kirkland_Main-1705	Kirkland_Manholes-953	318.51	Kirkland_Manholes-954	318.45	75.8	0.08	8	PVC	0.01	198	1	4	5	2.3		
Kirkland_Main-1706	Kirkland_Manholes-954	318.45	Kirkland_Manholes-955	318.15	133.7	0.22	8	PVC	0.01	334	1	8	9	2.7		
Kirkland_Main-1707	Kirkland_Manholes-1546	284.43	Kirkland_Manholes-1545	272.4	160.7	7.49	8	Concrete	0.013	1,484	8	40	48	3.2	SM14-Ex-EX121	
Kirkland_Main-1708	Kirkland_Manholes-750	289.43	Kirkland_Manholes-1546	284.43	152.8	3.27	8	Concrete	0.013	981	2	8	10	1	SM14-Ex-EX121	
Kirkland_Main-1709	Kirkland_Manholes-1553	308.15	Kirkland_Manholes-1546	284.43	340	6.98	8	Concrete	0.013	1,432	6	28	33	2.3	SM14-Ex-EX122	
Kirkland_Main-1710	Kirkland_Manholes-751	298.52	Kirkland_Manholes-750	289.43	402.2	2.26	8	Concrete	0.013	815	2	4	5	0.7	SM14-Ex-EX121	
Kirkland_Main-1711	Kirkland_Manholes-748	311.92	Kirkland_Manholes-752	265.45	362.2	12.83	8	Concrete	0.013	1,943	19	56	75	3.8	SM14-Ex-EX71	
Kirkland_Main-1712	Kirkland_Manholes-753	247.15	Kirkland_Manholes-754	246.56	209.3	0.28	8	PVC	0.01	374	2	4	6	1.6		
Kirkland_Main-1713	Kirkland_Manholes-1355	420.81	Kirkland_Manholes-1357	417.32	183.1	1.91	8	PVC	0.01	973	7	36	43	4.4		
Kirkland_Main-1714	Kirkland_Manholes-1356	418.13	Kirkland_Manholes-1357	417.32	41.8	1.94	8	Concrete	0.013	755	1	4	5	0.7	SM14-Ex-EX180	
Kirkland_Main-1715	Kirkland_Manholes-1357	417.32	Kirkland_Manholes-1358	410.38	295.5	2.35	8	Concrete	0.013	831	10	44	53	6.4	SM14-Ex-EX180	
Kirkland_Main-1716	Kirkland_Manholes-1358	410.38	Kirkland_Manholes-1359	407.6	322.3	0.86	8	Concrete	0.013	504	11	48	58	11.6	SM14-Ex-EX180	
Kirkland_Main-1717	Kirkland_Manholes-1359	407.6	Kirkland_Manholes-1364	404.91	317.2	0.85	8	Concrete	0.013	499	13	52	64	12.9	SM14-Ex-EX180	
Kirkland_Main-1718	Kirkland_Manholes-1360	392.45	Kirkland_Manholes-1361	390.34	26.4	7.99	8	Concrete	0.013	1,533	5	20	25	1.6	SM14-Ex-EX179	
Kirkland_Main-1719	Kirkland_Manholes-1361	390.34	Kirkland_Manholes-1371	389.7	160.2	0.4	8	PVC	0.01	446	19	79	98	22		Drop Connection
Kirkland_Main-1720	Kirkland_Manholes-1365	376.9	Kirkland_Manholes-1371	376.15	121.9	0.62	8	PVC	0.01	553	43	83	126	22.8		
Kirkland_Main-1721	Kirkland_Manholes-1366	377.95	Kirkland_Manholes-1365	376.9	166.8	0.63	8	PVC	0.01	559	43	79	122	21.9		
Kirkland_Main-1722	Kirkland_Manholes-1364	404.91	Kirkland_Manholes-1361	390.34	354.3	4.11	8	Concrete	0.013	1,100	14	56	69	6.3	SM14-Ex-EX180	
Kirkland_Main-1723	Kirkland_Manholes-1362	399.37	Kirkland_Manholes-1360	392.45	312.9	2.21	8	Concrete	0.013	807	5	16	21	2.6	SM14-Ex-EX179	
Kirkland_Main-1724	Kirkland_Manholes-1363	403.55	Kirkland_Manholes-1362	399.37	238	1.76	8	Concrete	0.013	719	3	12	15	2.1	SM14-Ex-EX179	
Kirkland_Main-1726	Kirkland_Manholes-1367	392.51	Kirkland_Manholes-1906	388.2	267.7	1.61	8	PVC	0.01	895	7	4	11	1.2		
Kirkland_Main-1727	Kirkland_Manholes-1368	393.26	Kirkland_Manholes-1369	387.01	105.4	5.93	8	Concrete	0.013	1,321	1	4	5	0.4	SM14-Ex-EX178	
Kirkland_Main-1728	Kirkland_Manholes-1369	387.01	Kirkland_Manholes-1370	385.7	133.5	0.98	8	Concrete	0.013	537	1	8	9	1.6	SM14-Ex-EX178	
Kirkland_Main-1729	Kirkland_Manholes-1370	385.7	Kirkland_Manholes-1371	376.15	179.2	5.33	8	Concrete	0.013	1,252	1	12	13	1	SM14-Ex-EX178	
Kirkland_Main-1730	Kirkland_Manholes-534	432.55	Kirkland_Manholes-1372	427.9	355.1	1.31	8	Concrete	0.013	621	44	139	183	29.5	SM14-Ex-EX218	
Kirkland_Main-1731	Kirkland_Manholes-560	483.4	Kirkland_Manholes-561	481.3	94.5	2.22	8	PVC	0.01	1,051	3	8	11	1		
Kirkland_Main-1733	Kirkland_Manholes-561	481.3	Kirkland_Manholes-1374	479.93	141.7	0.97	8	PVC	0.01	693	4	12	16	2.3		
Kirkland_Main-1734	Kirkland_Manholes-1376	483.23	Kirkland_Manholes-1375	479.6	272.8	1.33	8	PVC	0.01	813	2	4	6	0.8		
Kirkland_Main-1735	Kirkland_Manholes-1375	479.6	Kirkland_Manholes-1377	478.89	93.1	0.76	8	PVC	0.01	616	6	24	30	4.9		

Existing - Peak Hour Flow - Pipe Capacity Table

Label	Upstream Node	Upstream Invert Elevation (ft)	Downstream Node	Downstream Invert Elevation (ft)	Length (ft)	Slope (%)	Diameter (in)	Material	Manning's n	Design Capacity (gpm)	Domestic Flow (gpm)	I/I Flow (gpm)	Total Flow (gpm)	Percent Full (%)	CIP No.	Notes
Kirkland_Main-1736	Kirkland_Manholes-1377	478.89	Kirkland_Manholes-1378	472.9	259	2.31	8	PVC	0.01	1,072	7	28	35	3.3		
Kirkland_Main-1737	Kirkland_Manholes-1378	472.9	Kirkland_Manholes-1379	471.21	302	0.56	8	PVC	0.01	527	11	32	42	8		
Kirkland_Main-1738	Kirkland_Manholes-1374	479.93	Kirkland_Manholes-1375	479.6	219.3	0.15	8	PVC	0.01	274	4	16	20	7.2		
Kirkland_Main-1739	Kirkland_Manholes-1379	471.21	Kirkland_Manholes-564	469.28	271.7	0.71	8	PVC	0.01	594	11	36	47	7.9		
Kirkland_Main-1740	Kirkland_Manholes-340	235.81	Kirkland_Manholes-341	235.59	47.2	0.47	8	PVC	0.01	482	13	79	93	19.3		
Kirkland_Main-1741	Kirkland_Manholes-341	235.59	Kirkland_Manholes-342	234.97	31.7	1.95	8	Ductile Iron	0.012	821	18	127	146	17.7	SM14-Ex-EX49	
Kirkland_Main-1742	Kirkland_Manholes-342	234.97	Kirkland_Manholes-351	234.93	111.2	0.04	8	PVC	0.01	134	18	131	150	111.9	SM14-Ex-EX49	
Kirkland_Main-1743	Kirkland_Manholes-345	279.43	Kirkland_Manholes-344	279.2	57.3	0.4	8	PVC	0.01	446	4	8	12	2.7		
Kirkland_Main-1744	Kirkland_Manholes-344	279.2	Kirkland_Manholes-346	254.2	328.7	7.61	8	PVC	0.01	1,944	5	12	17	0.9		
Kirkland_Main-1745	Kirkland_Manholes-346	254.2	Kirkland_Manholes-347	250.02	240.3	1.74	8	PVC	0.01	930	6	16	22	2.4		
Kirkland_Main-1746	Kirkland_Manholes-348	251.65	Kirkland_Manholes-347	250.02	50.6	3.22	8	PVC	0.01	1,266	2	4	6	0.5		
Kirkland_Main-1747	Kirkland_Manholes-347	250.02	Kirkland_Manholes-349	238.18	204.7	5.78	8	PVC	0.01	1,695	9	24	33	2		
Kirkland_Main-1748	Kirkland_Manholes-349	238.18	Kirkland_Manholes-350	235.63	111.7	2.28	8	PVC	0.01	1,065	10	28	38	3.6		
Kirkland_Main-1749	Kirkland_Manholes-1666	89.71	Kirkland_Manholes-1673	84.18	111.9	4.94	8	PVC	0.01	1,568	42	148	190	12.2		
Kirkland_Main-1750	Kirkland_Manholes-1672	91.63	Kirkland_Manholes-1666	89.71	163.9	1.17	8	PVC	0.01	763	1	8	9	1.2		
Kirkland_Main-1751	Kirkland_Manholes-1671	101.9	Kirkland_Manholes-1667	101.23	167.6	0.4	8	PVC	0.01	446	5	8	13	3		
Kirkland_Main-1752	Kirkland_Manholes-1669	132.92	Kirkland_Manholes-1668	119.52	315.3	4.25	8	PVC	0.01	1,454	3	8	11	0.8		
Kirkland_Main-1753	Kirkland_Manholes-1670	121.1	Kirkland_Manholes-1668	119.52	161.1	0.98	8	PVC	0.01	698	3	8	11	1.6		
Kirkland_Main-1754	Kirkland_Manholes-1673	84.18	Kirkland_Manholes-1674	78.95	158.5	3.3	8	PVC	0.01	1,281	42	156	199	15.5		
Kirkland_Main-1755	Kirkland_Manholes-1677	88.12	Kirkland_Manholes-1674	87.91	51.7	0.4	8	PVC	0.01	446	21	41	62	14		Drop Connection
Kirkland_Main-1756	Kirkland_Manholes-1675	105.24	Kirkland_Manholes-1676	98.96	116.6	5.39	8	PVC	0.01	1,636	3	8	12	0.7		
Kirkland_Main-1757	Kirkland_Manholes-859	309.2	Kirkland_Manholes-865	308.29	290.7	0.31	8	Concrete	0.013	303	15	75	91	30	SM14-Ex-EX51	
Kirkland_Main-1758	Kirkland_Manholes-860	317.71	Kirkland_Manholes-859	309.2	202.9	4.19	8	Concrete	0.013	1,111	12	68	80	7.2	SM14-Ex-EX52	
Kirkland_Main-1759	Kirkland_Manholes-861	327.02	Kirkland_Manholes-860	317.71	236.9	3.93	8	Concrete	0.013	1,075	10	64	74	6.9	SM14-Ex-EX52	
Kirkland_Main-1760	Kirkland_Manholes-856	333.21	Kirkland_Manholes-861	327.02	162.2	3.82	8	Concrete	0.013	1,059	9	60	69	6.5	SM14-Ex-EX52	
Kirkland_Main-1761	Kirkland_Manholes-862	335.56	Kirkland_Manholes-856	333.21	185.2	1.27	8	Concrete	0.013	611	2	4	6	0.9	SM14-Ex-EX53	
Kirkland_Main-1762	Kirkland_Manholes-2254	240.28	Kirkland_Manholes-2253	239.74	205.7	0.26	8	Concrete	0.013	278	0	4	4	1.4	SM14-Ex-EX247	
Kirkland_Main-1763	Kirkland_Manholes-863	341.24	Kirkland_Manholes-864	334.74	171.5	3.79	8	Concrete	0.013	1,056	1	4	5	0.5	SM14-Ex-EX50	
Kirkland_Main-1764	Kirkland_Manholes-864	334.74	Kirkland_Manholes-865	308.29	391.4	6.76	8	Concrete	0.013	1,410	3	8	11	0.8	SM14-Ex-EX50	
Kirkland_Main-1765	Kirkland_Manholes-866	314.35	Kirkland_Manholes-865	308.29	226.5	2.68	8	Concrete	0.013	887	7	28	35	3.9	SM14-Ex-EX35	
Kirkland_Main-1766	Kirkland_Manholes-865	308.29	Kirkland_Manholes-392	305	233.2	1.41	8	Concrete	0.013	644	27	115	143	22.1	SM14-Ex-EX50	
Kirkland_Main-1767	Kirkland_Manholes-867	319	Kirkland_Manholes-866	314.35	119.3	3.9	8	Concrete	0.013	1,071	6	24	29	2.7	SM14-Ex-EX35	
Kirkland_Main-1768	Kirkland_Manholes-868	321.84	Kirkland_Manholes-867	319	90.7	3.13	8	Concrete	0.013	960	5	20	25	2.6	SM14-Ex-EX35	
Kirkland_Main-1769	Kirkland_Manholes-869	325.94	Kirkland_Manholes-868	321.84	101.3	4.05	8	Concrete	0.013	1,091	4	16	20	1.9	SM14-Ex-EX35	
Kirkland_Main-1770	Kirkland_Manholes-870	327.4	Kirkland_Manholes-869	325.94	99.3	1.47	8	Concrete	0.013	658	2	4	5	0.8	SM14-Ex-EX35	
Kirkland_Main-1771	Kirkland_Manholes-871	340.54	Kirkland_Manholes-872	339.98	74.2	0.75	8	Concrete	0.013	471	1	4	5	1	SM14-Ex-EX35	
Kirkland_Main-1772	Kirkland_Manholes-872	339.98	Kirkland_Manholes-869	325.94	265.2	5.29	8	Concrete	0.013	1,248	2	8	10	0.8	SM14-Ex-EX35	
Kirkland_Main-1773	Kirkland_Manholes-874	310.68	Kirkland_Manholes-382	308.23	108.1	2.27	8	PVC	0.01	1,062	1	4	5	0.5		
Kirkland_Main-1774	Kirkland_Manholes-875	310.4	Kirkland_Manholes-1073	302.05	254.5	3.28	8	PVC	0.01	1,277	3	4	7	0.5		
Kirkland_Main-1775	Kirkland_Manholes-2900	302.3	Kirkland_Manholes-876	301.25	160.8	0.65	8	PVC	0.01	570	6	40	46	8		
Kirkland_Main-1776	Kirkland_Manholes-876	301.25	Kirkland_Manholes-337	291.09	336.8	3.02	8	PVC	0.01	1,225	7	60	67	5.4		
Kirkland_Main-1777	Kirkland_Manholes-877	295.2	Kirkland_Manholes-884	291.06	114.3	3.62	8	PVC	0.01	1,342	0	4	4	0.3		
Kirkland_Main-1778	Kirkland_Manholes-884	291.06	Kirkland_Manholes-881	290.87	47	0.4	8	PVC	0.01	446	3	12	15	3.3		
Kirkland_Main-1779	Kirkland_Manholes-705	293.8	Kirkland_Manholes-884	291.06	213.2	1.29	8	PVC	0.01	800	2	4	6	0.7		
Kirkland_Main-1780	Kirkland_Manholes-881	290.87	Kirkland_Manholes-885	286.75	194.6	2.12	8	PVC	0.01	1,026	11	60	71	6.9		
Kirkland_Main-1781	Kirkland_Manholes-880	294.11	Kirkland_Manholes-881	290.87	199.3	1.63	8	PVC	0.01	899	8	44	52	5.8		
Kirkland_Main-1782	Kirkland_Manholes-879	310.92	Kirkland_Manholes-880	294.11	360	4.67	8	PVC	0.01	1,524	7	40	46	3		
Kirkland_Main-1783	Kirkland_Manholes-878	325.66	Kirkland_Manholes-879	310.92	320.8	4.59	8	PVC	0.01	1,511	5	36	40	2.7		
Kirkland_Main-1784	Kirkland_Manholes-886	291.6	Kirkland_Manholes-885	286.75	178.8	2.71	8	PVC	0.01	1,161	3	12	15	1.3		
Kirkland_Main-1785	Kirkland_Manholes-887	294.74	Kirkland_Manholes-886	291.6	177.9	1.77	8	PVC	0.01	937	2	8	10	1		
Kirkland_Main-1786	Kirkland_Manholes-888	307.6	Kirkland_Manholes-887	294.74	260	4.95	8	PVC	0.01	1,568	1	4	5	0.3		
Kirkland_Main-1788	Kirkland_Manholes-885	286.75	Kirkland_Manholes-889	285.3	34.9	4.16	8	PVC	0.01	1,437	14	75	90	6.2		
Kirkland_Main-1789	Kirkland_Manholes-336	286.9	Kirkland_Manholes-889	285.3	212.5	0.75	8	PVC	0.01	612	2	4	6	0.9		
Kirkland_Main-1790	Kirkland_Manholes-889	285.3	Kirkland_Manholes-890	280.21	299.8	1.7	8	PVC	0.01	919	17	83	100	10.9		
Kirkland_Main-1791	Kirkland_Manholes-891	282.85	Kirkland_Manholes-890	280.21	269.2	0.98	8	PVC	0.01	698	9	28	37	5.2		
Kirkland_Main-1792	Kirkland_Manholes-892	286	Kirkland_Manholes-891	282.85	80.7	3.9	8	PVC	0.01	1,393	7	24	31	2.2		
Kirkland_Main-1793	Kirkland_Manholes-895	303.91	Kirkland_Manholes-896	303.5	71	0.58	8	PVC	0.01	536	1	4	5	0.9		
Kirkland_Main-1794	Kirkland_Manholes-896	303.5	Kirkland_Manholes-893	293.25	259.5	3.95	8	PVC	0.01	1,401	2	12	14	1		
Kirkland_Main-1795	Kirkland_Manholes-894	293.53	Kirkland_Manholes-893	293.25	69.8	0.4	8	PVC	0.01	446	1	4	5	1.2		
Kirkland_Main-1796	Kirkland_Manholes-893	293.25	Kirkland_Manholes-892	286	208.9	3.47	8	PVC	0.01	1,314	5	20	25	1.9		
Kirkland_Main-1797	Kirkland_Manholes-897	317.07	Kirkland_Manholes-896	303.5	263.1	5.16	8	PVC	0.01	1,601	1	4	5	0.3		
Kirkland_Main-1798	Kirkland_Manholes-955	318.15	Kirkland_Manholes-956	317.42	90.2	0.81	8	PVC	0.01	634	1	12	13	2.1		

Existing - Peak Hour Flow - Pipe Capacity Table

Label	Upstream Node	Upstream Invert Elevation (ft)	Downstream Node	Downstream Invert Elevation (ft)	Length (ft)	Slope (%)	Diameter (in)	Material	Manning's n	Design Capacity (gpm)	Domestic Flow (gpm)	I/I Flow (gpm)	Total Flow (gpm)	Percent Full (%)	CIP No.	Notes
Kirkland_Main-1799	Kirkland_Manholes-956	317.42	Kirkland_Manholes-957	315.92	143.6	1.04	8	PVC	0.01	720	2	16	18	2.5		
Kirkland_Main-1800	Kirkland_Manholes-1294	129.1	Kirkland_Manholes-1295	119.7	303.2	3.1	6	Concrete	0.013	443	3	8	11	2.6	SM14-Ex-EX115	
Kirkland_Main-1801	Kirkland_Manholes-1296	129.32	Kirkland_Manholes-1295	119.7	314.4	3.06	6	Concrete	0.013	440	61	296	358	81.2	SM6	
Kirkland_Main-1802	Kirkland_Manholes-1301	241.1	Kirkland_Manholes-1300	221.25	201.1	9.87	8	Concrete	0.013	1,704	3	16	20	1.2	SM14-Ex-EX98	
Kirkland_Main-1803	Kirkland_Manholes-1299	227.62	Kirkland_Manholes-1300	221.25	159.1	4	8	Concrete	0.013	1,085	2	8	10	0.9	SM14-Ex-EX101	
Kirkland_Main-1804	Kirkland_Manholes-1300	221.25	Kirkland_Manholes-1250	210.15	248.6	4.47	8	Concrete	0.013	1,146	6	33	38	3.4	SM14-Ex-EX101	
Kirkland_Main-1805	Kirkland_Manholes-1303	126.2	Kirkland_Manholes-1295	119.7	386.9	1.68	6	Concrete	0.013	326	3	8	11	3.4	SM14-Ex-EX115	
Kirkland_Main-1806	Kirkland_Manholes-1304	180.12	Kirkland_Manholes-1258	154.28	295.6	8.74	6	Concrete	0.013	745	5	25	30	4	SM14-Ex-EX106	
Kirkland_Main-1807	Kirkland_Manholes-1306	225.07	Kirkland_Manholes-227	223.31	140.1	1.26	8	PVC	0.01	790	6	26	32	4		
Kirkland_Main-1808	Kirkland_Manholes-1309	233.16	Kirkland_Manholes-1308	229.72	344.3	1	8	PVC	0.01	705	1	8	9	1.3		
Kirkland_Main-1809	Kirkland_Manholes-1308	229.72	Kirkland_Manholes-1307	211.15	175.8	10.56	8	PVC	0.01	2,292	4	16	20	0.9		
Kirkland_Main-1810	Kirkland_Manholes-1307	211.15	Kirkland_Manholes-1252	181.71	226.9	12.97	8	Concrete	0.013	1,954	7	25	31	1.6	SM14-Ex-EX100	
Kirkland_Main-1812	Kirkland_Manholes-1275	185.58	Kirkland_Manholes-1276	172.95	322.8	3.91	8	PVC	0.01	1,395	2	8	11	0.8		
Kirkland_Main-1813	Kirkland_Manholes-1279	163.99	Kirkland_Manholes-1278	160.09	249.2	1.56	6	Concrete	0.013	315	5	25	29	9.3	SM14-Ex-EX103	
Kirkland_Main-1814	Kirkland_Manholes-1597	180.84	Kirkland_Manholes-1601	173.67	138.4	5.18	8	Concrete	0.013	1,235	53	159	212	17.2	SM14-Ex-EX121	
Kirkland_Main-1815	Kirkland_Manholes-1603	202.22	Kirkland_Manholes-1602	196.74	63.2	8.68	8	Concrete	0.013	1,598	65	226	291	18.2	SM14-Ex-EX172	
Kirkland_Main-1817	Kirkland_Manholes-1570	121.83	Kirkland_Manholes-1604	117.22	301	1.53	8	Concrete	0.013	671	3	8	12	1.7	SM14-Ex-EX120	
Kirkland_Main-1818	Kirkland_Manholes-1604	117.22	Kirkland_Manholes-1608	108.38	320.2	2.76	8	Concrete	0.013	901	7	49	56	6.3	SM14-Ex-EX119	
Kirkland_Main-1823	Kirkland_Manholes-1607	115.82	Kirkland_Manholes-1608	108.38	281.1	2.65	8	PVC	0.01	1,147	1	8	9	0.8		
Kirkland_Main-1824	Kirkland_Manholes-1608	108.38	Kirkland_Manholes-1609	99.56	224.5	3.93	8	Concrete	0.013	1,075	8	66	74	6.9	SM14-Ex-EX119	
Kirkland_Main-1825	Kirkland_Manholes-1609	99.56	Kirkland_Manholes-1610	98.61	103.1	0.92	8	Concrete	0.013	521	8	74	82	15.8	SM14-Ex-EX119	
Kirkland_Main-1826	Kirkland_Manholes-1615	109.23	Kirkland_Manholes-1610	98.61	252.9	4.2	8	PVC	0.01	1,445	3	16	20	1.4		
Kirkland_Main-1827	Kirkland_Manholes-1610	98.61	Kirkland_Manholes-1611	98.01	137.6	0.44	8	Concrete	0.013	358	11	99	110	30.8	SM14-Ex-EX160	
Kirkland_Main-1828	Kirkland_Manholes-1611	98.01	Kirkland_Manholes-1614	91.09	116.4	5.94	8	Concrete	0.013	1,322	11	107	118	9	SM14-Ex-EX167	
Kirkland_Main-1830	Kirkland_Manholes-350	235.63	Kirkland_Manholes-351	234.93	99	0.71	8	PVC	0.01	593	12	32	43	7.3		
Kirkland_Main-1831	Kirkland_Manholes-351	234.93	Kirkland_Manholes-352	234.2	197.8	0.37	8	PVC	0.01	428	30	167	197	46		
Kirkland_Main-1832	Kirkland_Manholes-353	237.24	Kirkland_Manholes-352	234.2	58.3	5.21	8	PVC	0.01	1,609	0	8	8	0.5		
Kirkland_Main-1833	Kirkland_Manholes-354	240.05	Kirkland_Manholes-353	237.24	111.3	2.52	8	PVC	0.01	1,120	0	4	4	0.4		
Kirkland_Main-1834	Kirkland_Manholes-355	245.23	Kirkland_Manholes-357	224.18	289.7	7.27	8	PVC	0.01	1,901	1	4	5	0.2		
Kirkland_Main-1835	Kirkland_Manholes-357	224.18	Kirkland_Manholes-356	218.57	38.2	14.7	8	PVC	0.01	2,703	1	8	9	0.3		
Kirkland_Main-1836	Kirkland_Manholes-356	218.57	Kirkland_Manholes-358	217.4	168.8	0.69	21	PVC	0.01	7,697	528	1,927	2,455	31.9		
Kirkland_Main-1837	Kirkland_Manholes-358	217.4	Kirkland_Manholes-362	216.81	209.2	0.28	21	PVC	0.01	4,910	528	1,931	2,459	50.1		
Kirkland_Main-1838	Kirkland_Manholes-365	215.67	Kirkland_Manholes-366	214.9	145.3	0.53	8	PVC	0.01	513	1	4	5	1		
Kirkland_Main-1839	Kirkland_Manholes-366	214.9	Kirkland_Manholes-367	213.02	57.5	3.27	8	PVC	0.01	1,275	1	8	9	0.7		
Kirkland_Main-1840	Kirkland_Manholes-364	215.51	Kirkland_Manholes-367	213.02	231.6	1.07	18	PVC	0.01	6,354	538	1,987	2,525	39.7		
Kirkland_Main-1841	Kirkland_Manholes-363	216.4	Kirkland_Manholes-3048	215.92	195.5	0.25	21	PVC	0.01	4,581	533	1,951	2,484	54.2		
Kirkland_Main-1842	Kirkland_Manholes-361	216.74	Kirkland_Manholes-363	216.4	169.2	0.2	21	PVC	0.01	4,140	533	1,947	2,480	59.9		
Kirkland_Main-1843	Kirkland_Manholes-359	233.48	Kirkland_Manholes-360	230.84	309.4	0.85	8	PVC	0.01	651	3	4	7	1		
Kirkland_Main-1844	Kirkland_Manholes-360	230.84	Kirkland_Manholes-361	216.74	103.8	13.58	8	PVC	0.01	2,599	4	8	12	0.5		
Kirkland_Main-1845	Kirkland_Manholes-400	274.94	Kirkland_Manholes-399	268.35	106.2	6.21	8	PVC	0.01	1,757	1	4	5	0.3		
Kirkland_Main-1846	Kirkland_Manholes-399	268.35	Kirkland_Manholes-394	266.89	274.5	0.53	8	PVC	0.01	514	3	8	11	2.1		
Kirkland_Main-1847	Kirkland_Manholes-405	259.21	Kirkland_Manholes-404	259.2	31.6	0.03	8	PVC	0.01	125	0	4	4	3.2		
Kirkland_Main-1848	Kirkland_Manholes-404	259.2	Kirkland_Manholes-403	257.79	99.7	1.41	8	PVC	0.01	839	0	8	8	1		
Kirkland_Main-1849	Kirkland_Manholes-403	257.79	Kirkland_Manholes-402	257.52	55.3	0.49	8	PVC	0.01	493	1	12	12	2.5		
Kirkland_Main-1850	Kirkland_Manholes-402	257.52	Kirkland_Manholes-401	256.8	97.3	0.74	8	PVC	0.01	607	1	16	17	2.8		
Kirkland_Main-1851	Kirkland_Manholes-401	256.8	Kirkland_Manholes-395	253.88	284.1	1.03	8	PVC	0.01	715	2	20	22	3.1		
Kirkland_Main-1852	Kirkland_Manholes-406	288.66	Kirkland_Manholes-393	288.03	160.6	0.39	8	PVC	0.01	442	2	4	6	1.3		
Kirkland_Main-1853	Kirkland_Manholes-410	278.41	Kirkland_Manholes-409	264.84	185.6	7.31	8	PVC	0.01	1,906	1	4	5	0.3		
Kirkland_Main-1854	Kirkland_Manholes-425	290.3	Kirkland_Manholes-420	281.46	112.7	7.84	8	PVC	0.01	1,974	6	28	34	1.7		
Kirkland_Main-1855	Kirkland_Manholes-370	206.64	Kirkland_Manholes-2869	204.84	75.1	2.4	18	PVC	0.01	9,487	548	2,038	2,587	27.3		
Kirkland_Main-1856	Kirkland_Manholes-436	58.61	Kirkland_Manholes-437	58.56	24.6	0.22	12	Concrete	0.013	750	197	644	842	112.2	SM14-Ex-EX30	
Kirkland_Main-1857	Kirkland_Manholes-437	58.56	Kirkland_Manholes-188	58.06	273	0.18	12	Concrete	0.013	684	202	657	859	125.5	SM14-Ex-EX30	
Kirkland_Main-1858	Kirkland_Manholes-450	130.07	Kirkland_Manholes-448	127.19	147.1	1.96	8	PVC	0.01	987	4	17	21	2.1		
Kirkland_Main-1859	Kirkland_Manholes-448	127.19	Kirkland_Manholes-449	124.43	143	1.93	8	PVC	0.01	979	4	21	25	2.5		
Kirkland_Main-1860	Kirkland_Manholes-449	124.43	Kirkland_Manholes-446	123.86	143.4	0.4	8	PVC	0.01	446	4	26	29	6.5		Drop Connection
Kirkland_Main-1861	Kirkland_Manholes-447	95.3	Kirkland_Manholes-446	94.25	125.1	0.84	8	PVC	0.01	646	0	4	4	0.7		
Kirkland_Main-1862	Kirkland_Manholes-445	128.4	Kirkland_Manholes-444	92.89	173.2	20.5	8	PVC	0.01	3,192	0	4	4	0.1		
Kirkland_Main-1863	Kirkland_Manholes-446	94.25	Kirkland_Manholes-444	92.89	143.2	0.95	8	PVC	0.01	687	4	34	38	5.5		
Kirkland_Main-1864	Kirkland_Manholes-1522	291.35	Kirkland_Manholes-145	271.65	161.3	12.21	8	PVC	0.01	2,464	2	8	10	0.4		
Kirkland_Main-1865	Kirkland_Manholes-145	271.65	Kirkland_Manholes-1315	270.9	108.1	0.69	8	PVC	0.01	587	14	48	62	10.5		
Kirkland_Main-1866	Kirkland_Manholes-1314	312.02	Kirkland_Manholes-1522	291.35	177.8	11.62	8	PVC	0.01	2,404	1	4	5	0.2		
Kirkland_Main-1867	Kirkland_Manholes-1515	261.7	Kirkland_Manholes-1516	259.7	167.2	1.2	8	Concrete	0.013	593	33	147	180	30.4	SM14-Ex-EX131	

Existing - Peak Hour Flow - Pipe Capacity Table

Label	Upstream Node	Upstream Invert Elevation (ft)	Downstream Node	Downstream Invert Elevation (ft)	Length (ft)	Slope (%)	Diameter (in)	Material	Manning's n	Design Capacity (gpm)	Domestic Flow (gpm)	I/I Flow (gpm)	Total Flow (gpm)	Percent Full (%)	CIP No.	Notes
Kirkland_Main-1868	Kirkland_Manholes-1516	259.7	Kirkland_Manholes-1593	256.67	397.6	0.76	8	Concrete	0.013	473	37	151	188	39.7	SM14-Ex-EX131	
Kirkland_Main-1869	Kirkland_Manholes-1520	262.79	Kirkland_Manholes-1517	262.15	299	0.21	8	Concrete	0.013	251	2	4	6	2.2	SM14-Ex-EX129	
Kirkland_Main-1870	Kirkland_Manholes-1518	277.88	Kirkland_Manholes-1517	262.15	157.4	10	8	Concrete	0.013	1,715	12	28	40	2.3	SM14-Ex-EX124	
Kirkland_Main-1871	Kirkland_Manholes-1517	262.15	Kirkland_Manholes-1592	255.76	316.1	2.02	8	Concrete	0.013	771	14	36	50	6.5	SM14-Ex-EX124	
Kirkland_Main-1872	Kirkland_Manholes-1519	265	Kirkland_Manholes-1521	258.62	235.2	2.71	8	Concrete	0.013	893	1	4	5	0.6	SM14-Ex-EX128	
Kirkland_Main-1873	Kirkland_Manholes-1521	258.62	Kirkland_Manholes-1524	207.32	404.3	12.69	8	Concrete	0.013	1,932	2	8	10	0.5	SM14-Ex-EX128	
Kirkland_Main-1874	Kirkland_Manholes-1552	337.73	Kirkland_Manholes-761	326.09	158.4	7.35	8	Concrete	0.013	1,470	1	4	5	0.3	SM14-Ex-EX124	
Kirkland_Main-1875	Kirkland_Manholes-761	326.09	Kirkland_Manholes-760	311.91	217.3	6.53	8	Concrete	0.013	1,385	4	8	12	0.9	SM14-Ex-EX124	
Kirkland_Main-1876	Kirkland_Manholes-760	311.91	Kirkland_Manholes-1538	302.73	273.6	3.36	8	Concrete	0.013	993	6	12	18	1.8	SM14-Ex-EX124	
Kirkland_Main-1877	Kirkland_Manholes-1542	314.5	Kirkland_Manholes-1541	294.69	208.5	9.5	8	Concrete	0.013	1,672	1	4	5	0.3	SM14-Ex-EX123	
Kirkland_Main-1878	Kirkland_Manholes-1540	296.8	Kirkland_Manholes-1541	294.69	76	2.78	8	Concrete	0.013	904	4	8	12	1.3	SM14-Ex-EX123	
Kirkland_Main-1879	Kirkland_Manholes-1539	301.51	Kirkland_Manholes-1540	296.8	362.1	1.3	8	Concrete	0.013	619	3	4	7	1.1	SM14-Ex-EX123	
Kirkland_Main-1880	Kirkland_Manholes-1523	194.94	Kirkland_Manholes-1597	180.84	315.7	4.47	8	Concrete	0.013	1,146	45	143	188	16.4	SM14-Ex-EX121	
Kirkland_Main-1881	Kirkland_Manholes-1524	207.32	Kirkland_Manholes-1523	194.94	95.1	13.01	8	Concrete	0.013	1,956	4	12	16	0.8	SM14-Ex-EX128	
Kirkland_Main-1882	Kirkland_Manholes-1528	217.87	Kirkland_Manholes-1523	194.94	317.2	7.23	8	Concrete	0.013	1,458	41	127	168	11.5	SM14-Ex-EX121	
Kirkland_Main-1883	Kirkland_Manholes-1525	281.6	Kirkland_Manholes-1526	273.99	396.4	1.92	8	Concrete	0.013	751	2	4	6	0.7	SM14-Ex-EX127	
Kirkland_Main-1884	Kirkland_Manholes-1526	273.99	Kirkland_Manholes-1527	258.94	183.5	8.2	8	Concrete	0.013	1,553	3	8	11	0.7	SM14-Ex-EX127	
Kirkland_Main-1885	Kirkland_Manholes-1527	258.94	Kirkland_Manholes-1528	217.87	397.7	10.33	8	Concrete	0.013	1,743	4	12	16	0.9	SM14-Ex-EX127	
Kirkland_Main-1886	Kirkland_Manholes-1535	304.79	Kirkland_Manholes-1534	301.8	155.7	1.92	8	Concrete	0.013	752	0	4	4	0.6	SM14-Ex-EX126	
Kirkland_Main-1887	Kirkland_Manholes-1534	301.8	Kirkland_Manholes-1533	294.07	244.9	3.16	8	Concrete	0.013	963	1	8	9	1	SM14-Ex-EX126	
Kirkland_Main-1888	Kirkland_Manholes-775	172.73	KC_Manholes-5	169.15	345.4	1.04	8	PVC	0.01	718	5	32	37	5.2		
Kirkland_Main-1889	Kirkland_Manholes-774	192.94	KC_Manholes-5	169.15	221.2	10.75	8	PVC	0.01	2,312	2	8	10	0.4		
Kirkland_Main-1890	Kirkland_Manholes-773	227.51	Kirkland_Manholes-774	192.94	170.2	20.31	8	PVC	0.01	3,177	1	4	5	0.2		
Kirkland_Main-1891	Kirkland_Manholes-772	214.68	Kirkland_Manholes-771	213.99	63.9	1.08	8	PVC	0.01	733	1	4	5	0.7		
Kirkland_Main-1892	Kirkland_Manholes-443	91.49	Kirkland_Manholes-442	83.66	233.7	3.35	8	PVC	0.01	1,291	40	47	87	6.8		
Kirkland_Main-1893	Kirkland_Manholes-442	83.66	Kirkland_Manholes-441	83.38	212.8	0.13	8	PVC	0.01	256	40	51	92	35.8		
Kirkland_Main-1894	Kirkland_Manholes-441	83.38	Kirkland_Manholes-433	80.24	108	2.91	8	PVC	0.01	1,202	40	55	96	8		
Kirkland_Main-1895	Kirkland_Manholes-432	97.11	Kirkland_Manholes-433	80.24	205.7	8.2	8	PVC	0.01	2,019	99	358	457	22.6	SM14-Ex-EX30	
Kirkland_Main-1896	Kirkland_Manholes-426	144.6	Kirkland_Manholes-427	143.58	254.5	0.4	8	Concrete	0.013	343	93	333	426	124.2	SM14-Ex-EX30	
Kirkland_Main-1897	Kirkland_Manholes-427	143.58	Kirkland_Manholes-428	141.37	251.3	0.88	8	Concrete	0.013	509	99	337	436	85.7	SM14-Ex-EX30	
Kirkland_Main-1898	Kirkland_Manholes-428	141.37	Kirkland_Manholes-429	138.12	320.6	1.01	8	Concrete	0.013	546	99	341	440	80.6	SM14-Ex-EX30	
Kirkland_Main-1899	Kirkland_Manholes-429	138.12	Kirkland_Manholes-430	132.21	248.9	2.37	8	Concrete	0.013	836	99	346	444	53.2	SM14-Ex-EX30	
Kirkland_Main-1900	Kirkland_Manholes-430	132.21	Kirkland_Manholes-431	114.37	310.4	5.75	8	Concrete	0.013	1,300	99	350	449	34.5	SM14-Ex-EX30	
Kirkland_Main-1901	Kirkland_Manholes-431	114.37	Kirkland_Manholes-432	97.11	290.4	5.94	8	Concrete	0.013	1,322	99	354	453	34.3	SM14-Ex-EX30	
Kirkland_Main-1902	Kirkland_Manholes-433	80.24	Kirkland_Manholes-434	74.08	187.9	3.28	8	Concrete	0.013	982	139	418	557	56.7	SM14-Ex-EX30	
Kirkland_Main-1903	Kirkland_Manholes-434	74.08	Kirkland_Manholes-435	64.4	325.2	2.98	8	Concrete	0.013	936	139	422	562	60	SM14-Ex-EX30	
Kirkland_Main-1904	Kirkland_Manholes-439	82.56	Kirkland_Manholes-438	74.46	270.1	3	8	PVC	0.01	1,221	0	4	4	0.3		
Kirkland_Main-1905	Kirkland_Manholes-438	74.46	Kirkland_Manholes-435	64.4	260.6	3.86	8	Concrete	0.013	1,065	58	213	271	25.5	SM14-Ex-EX31	
Kirkland_Main-1906	Kirkland_Manholes-435	64.4	Kirkland_Manholes-436	58.61	312.5	1.85	12	Concrete	0.013	2,176	197	640	837	38.5	SM14-Ex-EX30	
Kirkland_Main-1907	Kirkland_Manholes-1018	179.75	Kirkland_Manholes-451	173.02	146.6	4.59	8	Concrete	0.013	1,162	50	171	221	19	SM14-Ex-EX31	
Kirkland_Main-1908	Kirkland_Manholes-453	159.42	Kirkland_Manholes-454	126.39	122.9	26.88	8	Concrete	0.013	2,812	52	184	236	8.4	SM14-Ex-EX31	
Kirkland_Main-1909	Kirkland_Manholes-440	131.78	Kirkland_Manholes-454	126.39	361.7	1.49	8	Ductile Iron	0.012	717	5	17	22	3.1	SM14-Ex-EX31	
Kirkland_Main-1910	Kirkland_Manholes-1026	149.27	Kirkland_Manholes-440	131.78	156.8	11.16	8	PVC	0.01	2,355	5	13	17	0.7		
Kirkland_Main-1911	Kirkland_Manholes-451	173.02	Kirkland_Manholes-452	170.49	70.2	3.6	8	Concrete	0.013	1,030	50	175	225	21.9	SM14-Ex-EX31	
Kirkland_Main-1912	Kirkland_Manholes-452	170.49	Kirkland_Manholes-453	159.42	88.9	12.45	8	Concrete	0.013	1,914	51	179	230	12	SM14-Ex-EX31	
Kirkland_Main-1913	Kirkland_Manholes-454	126.39	Kirkland_Manholes-438	74.46	305.4	17.01	8	Concrete	0.013	2,237	58	205	263	11.7	SM14-Ex-EX31	
Kirkland_Main-1914	Kirkland_Manholes-484	295.92	Kirkland_Manholes-483	294.22	69.9	2.43	8	PVC	0.01	1,098	2	4	6	0.5		
Kirkland_Main-1915	Kirkland_Manholes-483	294.22	Kirkland_Manholes-482	293.97	63.5	0.4	8	PVC	0.01	446	2	8	10	2.2		
Kirkland_Main-1916	Kirkland_Manholes-481	300.21	Kirkland_Manholes-482	293.97	44.6	13.98	8	PVC	0.01	2,636	7	40	47	1.8		
Kirkland_Main-1917	Kirkland_Manholes-477	317.64	Kirkland_Manholes-481	300.21	198.9	8.76	8	PVC	0.01	2,087	6	36	42	2		
Kirkland_Main-1918	Kirkland_Manholes-478	318.91	Kirkland_Manholes-477	317.64	130.7	0.97	8	PVC	0.01	695	5	32	37	5.3		
Kirkland_Main-1919	Kirkland_Manholes-479	328.09	Kirkland_Manholes-478	318.91	81.5	11.27	8	PVC	0.01	2,367	5	28	33	1.4		
Kirkland_Main-1920	Kirkland_Manholes-476	330.32	Kirkland_Manholes-475	322.42	166.4	4.75	8	PVC	0.01	1,536	2	4	6	0.4		
Kirkland_Main-1921	Kirkland_Manholes-475	322.42	Kirkland_Manholes-473	288.65	238.6	14.15	8	PVC	0.01	2,653	3	8	11	0.4		
Kirkland_Main-1922	Kirkland_Manholes-474	290.07	Kirkland_Manholes-473	288.65	187.1	0.76	8	PVC	0.01	614	2	4	6	1		
Kirkland_Main-1923	Kirkland_Manholes-473	288.65	Kirkland_Manholes-468	238.51	297.1	16.88	8	PVC	0.01	2,896	5	16	21	0.7		
Kirkland_Main-1924	Kirkland_Manholes-468	238.51	Kirkland_Manholes-462	219.91	120.9	15.39	8	PVC	0.01	2,766	6	20	26	0.9		
Kirkland_Main-1925	Kirkland_Manholes-463	227.23	Kirkland_Manholes-462	219.91	71.2	10.28	8	PVC	0.01	2,261	2	8	10	0.4		
Kirkland_Main-1926	Kirkland_Manholes-464	254.44	Kirkland_Manholes-463	227.23	171	15.91	8	PVC	0.01	2,812	2	4	6	0.2		
Kirkland_Main-1927	Kirkland_Manholes-462	219.91	Kirkland_Manholes-465	166.54	349.5	15.27	8	PVC	0.01	2,755	8	32	40	1.4		
Kirkland_Main-1928	Kirkland_Manholes-465	166.54	Kirkland_Manholes-466	159.47	196.4	3.6	8	PVC	0.01	1,338	8	36	44	3.3		
Kirkland_Main-1929	Kirkland_Manholes-467	166.95	Kirkland_Manholes-466	159.47	59.4	12.59	8	PVC	0.01	2,502	5	16	21	0.8		

Existing - Peak Hour Flow - Pipe Capacity Table

Label	Upstream Node	Upstream Invert Elevation (ft)	Downstream Node	Downstream Invert Elevation (ft)	Length (ft)	Slope (%)	Diameter (in)	Material	Manning's n	Design Capacity (gpm)	Domestic Flow (gpm)	I/I Flow (gpm)	Total Flow (gpm)	Percent Full (%)	CIP No.	Notes
Kirkland_Main-1930	Kirkland_Manholes-469	217.48	Kirkland_Manholes-470	207.2	162.3	6.34	8	PVC	0.01	1,775	1	4	5	0.3		
Kirkland_Main-1931	Kirkland_Manholes-471	208.89	Kirkland_Manholes-470	207.2	106.2	1.59	8	PVC	0.01	889	0	4	4	0.5		
Kirkland_Main-1932	Kirkland_Manholes-470	207.2	Kirkland_Manholes-472	192.62	137.7	10.59	8	PVC	0.01	2,294	2	12	13	0.6		
Kirkland_Main-1934	Kirkland_Manholes-489	206.41	Kirkland_Manholes-467	166.95	178.4	22.12	8	PVC	0.01	3,316	5	12	16	0.5		
Kirkland_Main-1935	Kirkland_Manholes-491	317.17	Kirkland_Manholes-492	300.1	240.7	7.09	8	PVC	0.01	1,878	3	8	11	0.6		
Kirkland_Main-1936	Kirkland_Manholes-492	300.1	Kirkland_Manholes-778	273.49	272.5	9.76	8	PVC	0.01	2,203	3	12	15	0.7		
Kirkland_Main-1937	Kirkland_Manholes-778	273.49	Kirkland_Manholes-783	251.91	166.5	12.96	8	PVC	0.01	2,539	4	16	20	0.8		
Kirkland_Main-1938	Kirkland_Manholes-783	251.91	Kirkland_Manholes-782	245.67	36.9	16.9	8	PVC	0.01	2,898	16	91	108	3.7		
Kirkland_Main-1939	Kirkland_Manholes-779	276.61	Kirkland_Manholes-486	260.65	97.8	16.33	8	PVC	0.01	2,849	1	4	5	0.2		
Kirkland_Main-1940	Kirkland_Manholes-486	260.65	Kirkland_Manholes-487	257.38	130.2	2.51	8	PVC	0.01	1,117	12	68	79	7.1		
Kirkland_Main-1942	Kirkland_Manholes-487	257.38	Kirkland_Manholes-783	251.91	251.1	2.18	8	PVC	0.01	1,041	12	72	84	8		
Kirkland_Main-1943	Kirkland_Manholes-781	270.16	Kirkland_Manholes-782	245.67	162	15.11	8	PVC	0.01	2,741	2	8	10	0.4		
Kirkland_Main-1944	Kirkland_Manholes-780	304.33	Kirkland_Manholes-781	270.16	338	10.11	8	PVC	0.01	2,242	2	4	6	0.3		
Kirkland_Main-1945	Kirkland_Manholes-782	245.67	Kirkland_Manholes-785	203.06	217.1	19.63	8	PVC	0.01	3,124	19	103	122	3.9		
Kirkland_Main-1946	Kirkland_Manholes-785	203.06	Kirkland_Manholes-784	186.93	82.2	19.62	8	PVC	0.01	3,123	19	107	127	4.1		
Kirkland_Main-1947	Kirkland_Manholes-784	186.93	Kirkland_Manholes-786	173.41	68.9	19.64	8	PVC	0.01	3,124	58	262	321	10.3		
Kirkland_Main-1948	Kirkland_Manholes-789	234.78	Kirkland_Manholes-788	234.04	150	0.49	8	PVC	0.01	495	1	4	5	0.9		
Kirkland_Main-1949	Kirkland_Manholes-788	234.04	Kirkland_Manholes-787	233.49	110.1	0.5	8	PVC	0.01	498	1	8	9	1.8		
Kirkland_Main-1950	Kirkland_Manholes-787	233.49	Kirkland_Manholes-790	227.7	106.2	5.45	8	PVC	0.01	1,646	2	12	14	0.8		
Kirkland_Main-1951	Kirkland_Manholes-485	265.21	Kirkland_Manholes-486	260.65	233.3	1.95	8	PVC	0.01	986	10	60	70	7.1		
Kirkland_Main-1952	Kirkland_Manholes-490	279.75	Kirkland_Manholes-485	265.21	234	6.21	8	PVC	0.01	1,758	9	56	65	3.7		
Kirkland_Main-1953	Kirkland_Manholes-482	293.97	Kirkland_Manholes-490	279.75	98.3	14.47	8	PVC	0.01	2,682	9	52	60	2.3		
Kirkland_Main-1954	Kirkland_Manholes-791	327.42	Kirkland_Manholes-491	317.17	287.1	3.57	6	PVC	0.01	619	2	4	6	0.9	SM14-Ex-EX47	
Kirkland_Main-1955	Kirkland_Manholes-796	329.52	Kirkland_Manholes-479	328.09	60.4	2.37	8	PVC	0.01	1,085	4	24	28	2.6		
Kirkland_Main-1956	Kirkland_Manholes-802	309.62	Kirkland_Manholes-801	301.38	220.6	3.74	8	PVC	0.01	1,363	1	4	5	0.4		
Kirkland_Main-1957	Kirkland_Manholes-801	301.38	Kirkland_Manholes-800	299.84	122.4	1.26	8	PVC	0.01	791	3	8	11	1.4		
Kirkland_Main-1958	Kirkland_Manholes-800	299.84	Kirkland_Manholes-799	299.17	200.4	0.33	8	PVC	0.01	408	4	12	16	3.9		
Kirkland_Main-1960	Kirkland_Manholes-797	330.09	Kirkland_Manholes-798	328.4	134	1.26	8	PVC	0.01	792	1	4	5	0.6		
Kirkland_Main-1961	Kirkland_Manholes-798	328.4	Kirkland_Manholes-799	299.17	250.4	11.67	8	PVC	0.01	2,409	2	8	10	0.4		
Kirkland_Main-1962	Kirkland_Manholes-799	299.17	Kirkland_Manholes-803	278.64	308	6.67	8	PVC	0.01	1,820	7	24	31	1.7		
Kirkland_Main-1963	Kirkland_Manholes-805	300.26	Kirkland_Manholes-806	295.73	104.4	4.34	8	PVC	0.01	1,468	6	24	30	2		
Kirkland_Main-1964	Kirkland_Manholes-806	295.73	Kirkland_Manholes-804	284.1	194.3	5.99	8	PVC	0.01	1,725	7	28	35	2		
Kirkland_Main-1965	Kirkland_Manholes-807	300.8	Kirkland_Manholes-805	300.26	78.9	0.68	8	PVC	0.01	583	6	20	26	4.4		
Kirkland_Main-1966	Kirkland_Manholes-819	270.84	Kirkland_Manholes-818	259.9	158.1	6.92	8	PVC	0.01	1,854	1	4	5	0.3		
Kirkland_Main-1967	Kirkland_Manholes-818	259.9	Kirkland_Manholes-816	252.1	223.2	3.49	8	PVC	0.01	1,318	3	8	11	0.8		
Kirkland_Main-1968	Kirkland_Manholes-816	252.1	Kirkland_Manholes-815	248.52	125.8	2.85	8	PVC	0.01	1,190	4	12	16	1.3		
Kirkland_Main-1969	Kirkland_Manholes-817	249.75	Kirkland_Manholes-815	248.52	170.1	0.72	8	PVC	0.01	600	2	4	6	1		
Kirkland_Main-1970	Kirkland_Manholes-814	224.81	Kirkland_Manholes-813	224.1	119.5	0.59	8	PVC	0.01	543	31	127	158	29.1		
Kirkland_Main-1971	Kirkland_Manholes-813	224.1	Kirkland_Manholes-811	220.71	283.2	1.2	8	PVC	0.01	771	33	131	164	21.3		
Kirkland_Main-1972	Kirkland_Manholes-810	231.27	Kirkland_Manholes-811	220.71	86.4	12.23	8	PVC	0.01	2,465	4	12	16	0.6		
Kirkland_Main-1973	Kirkland_Manholes-811	220.71	Kirkland_Manholes-812	219.12	123.9	1.28	8	PVC	0.01	799	38	147	185	23.1		
Kirkland_Main-1974	Kirkland_Manholes-809	238.49	Kirkland_Manholes-810	231.27	197.7	3.65	8	PVC	0.01	1,347	3	8	11	0.8		
Kirkland_Main-1975	Kirkland_Manholes-808	239.21	Kirkland_Manholes-809	238.5	177.5	0.4	8	PVC	0.01	446	2	4	6	1.3		Drop Connection
Kirkland_Main-1976	Kirkland_Manholes-812	219.12	Kirkland_Manholes-784	186.93	281.2	11.45	8	PVC	0.01	2,385	39	151	190	7.9		
Kirkland_Main-1977	Kirkland_Manholes-822	337.49	Kirkland_Manholes-823	321.62	170.9	9.29	8	Concrete	0.013	1,653	1	4	5	0.3	SM14-Ex-EX69	
Kirkland_Main-1978	Kirkland_Manholes-823	321.62	Kirkland_Manholes-824	311.58	159.2	6.3	8	Concrete	0.013	1,362	2	8	10	0.7	SM14-Ex-EX69	
Kirkland_Main-1979	Kirkland_Manholes-824	311.58	Kirkland_Manholes-825	285.55	131.7	19.76	8	Concrete	0.013	2,411	2	12	14	0.6	SM14-Ex-EX69	
Kirkland_Main-1980	Kirkland_Manholes-825	285.55	Kirkland_Manholes-826	282.55	56.8	5.29	8	Concrete	0.013	1,247	3	24	27	2.2	SM14-Ex-EX69	
Kirkland_Main-1981	Kirkland_Manholes-827	295.62	Kirkland_Manholes-828	285.89	94.5	10.29	8	Concrete	0.013	1,740	0	4	4	0.3	SM14-Ex-EX69	
Kirkland_Main-1982	Kirkland_Manholes-826	282.55	Kirkland_Manholes-456	263.04	178.8	10.91	8	Concrete	0.013	1,791	3	28	31	1.7	SM14-Ex-EX69	
Kirkland_Main-1983	Kirkland_Manholes-828	285.89	Kirkland_Manholes-825	285.55	69	0.49	8	Concrete	0.013	381	1	8	9	2.3	SM14-Ex-EX69	
Kirkland_Main-1984	Kirkland_Manholes-790	227.7	Kirkland_Manholes-830	198.45	91.3	32.05	8	PVC	0.01	3,991	2	16	18	0.5		Slope verified in as-builts
Kirkland_Main-1985	Kirkland_Manholes-830	198.45	Kirkland_Manholes-831	192.6	15.9	36.68	8	PVC	0.01	4,270	4	24	28	0.6		Slope verified in as-builts
Kirkland_Main-1986	Kirkland_Manholes-831	192.6	Kirkland_Manholes-786	173.41	171.2	11.21	8	Concrete	0.013	1,816	4	28	32	1.7	SM14-Ex-EX46	
Kirkland_Main-1987	Kirkland_Manholes-461	269.91	Kirkland_Manholes-460	268.13	121.9	1.46	8	Concrete	0.013	655	1	4	5	0.8	SM14-Ex-EX68	
Kirkland_Main-1988	Kirkland_Manholes-460	268.13	Kirkland_Manholes-456	263.04	170.9	2.98	8	Concrete	0.013	936	2	8	10	1	SM14-Ex-EX68	
Kirkland_Main-1989	Kirkland_Manholes-455	250.45	Kirkland_Manholes-457	235.02	148.1	10.42	8	Concrete	0.013	1,751	29	111	140	8	SM14-Ex-EX67	
Kirkland_Main-1990	Kirkland_Manholes-457	235.02	Kirkland_Manholes-458	212.1	153.1	14.97	8	Concrete	0.013	2,098	29	119	148	7.1	SM14-Ex-EX67	
Kirkland_Main-1991	Kirkland_Manholes-459	247.75	Kirkland_Manholes-457	235.02	263.1	4.84	8	Concrete	0.013	1,193	1	4	5	0.4	SM14-Ex-EX67	
Kirkland_Main-1992	Kirkland_Manholes-456	263.04	Kirkland_Manholes-455	262.36	18.8	3.61	8	Concrete	0.013	1,030	5	40	45	4.3	SM14-Ex-EX68	Drop Connection
Kirkland_Main-1993	Kirkland_Manholes-792	342.6	Kirkland_Manholes-832	339.26	96.2	3.47	8	Concrete	0.013	1,011	1	4	5	0.5	SM14-Ex-EX70	
Kirkland_Main-1994	Kirkland_Manholes-793	339.56	Kirkland_Manholes-832	339.26	76	0.4	8	Concrete	0.013	343	2	4	6	1.7	SM14-Ex-EX70	

Existing - Peak Hour Flow - Pipe Capacity Table

Label	Upstream Node	Upstream Invert Elevation (ft)	Downstream Node	Downstream Invert Elevation (ft)	Length (ft)	Slope (%)	Diameter (in)	Material	Manning's n	Design Capacity (gpm)	Domestic Flow (gpm)	I/I Flow (gpm)	Total Flow (gpm)	Percent Full (%)	CIP No.	Notes
Kirkland_Main-1997	Kirkland_Manholes-988	238.57	Kirkland_Manholes-989	235.68	166.4	1.74	8	PVC	0.01	929	1	4	5	0.6		
Kirkland_Main-1998	Kirkland_Manholes-989	235.68	Kirkland_Manholes-990	231.8	65.1	5.96	8	PVC	0.01	1,721	2	9	11	0.6		
Kirkland_Main-1999	Kirkland_Manholes-990	231.8	Kirkland_Manholes-991	230.6	208.7	0.57	8	PVC	0.01	535	4	13	16	3.1		
Kirkland_Main-2000	Kirkland_Manholes-992	230.9	Kirkland_Manholes-991	230.6	22.8	1.32	8	PVC	0.01	809	1	4	5	0.6		
Kirkland_Main-2001	Kirkland_Manholes-991	230.6	Kirkland_Manholes-993	229.29	112.3	1.17	8	PVC	0.01	762	4	21	26	3.4		
Kirkland_Main-2002	Kirkland_Manholes-993	229.29	Kirkland_Manholes-994	224.8	89	5.04	8	PVC	0.01	1,583	5	26	31	1.9		
Kirkland_Main-2003	Kirkland_Manholes-996	225.97	Kirkland_Manholes-994	224.8	53	2.21	8	PVC	0.01	1,047	0	4	4	0.4		
Kirkland_Main-2004	Kirkland_Manholes-994	224.8	Kirkland_Manholes-995	224.6	50	0.4	8	PVC	0.01	446	5	34	39	8.8		
Kirkland_Main-2005	Kirkland_Manholes-995	224.6	Kirkland_Manholes-997	222.3	221.9	1.04	8	PVC	0.01	718	6	38	45	6.3		
Kirkland_Main-2006	Kirkland_Manholes-997	222.3	Kirkland_Manholes-998	220.4	187.6	1.01	8	PVC	0.01	710	6	43	49	6.9		
Kirkland_Main-2007	Kirkland_Manholes-998	220.4	Kirkland_Manholes-980	219.4	152.8	0.65	8	PVC	0.01	570	6	47	53	9.4		
Kirkland_Main-2008	Kirkland_Manholes-980	219.4	Kirkland_Manholes-981	218.7	155.5	0.45	8	PVC	0.01	473	18	115	133	28.2		
Kirkland_Main-2009	Kirkland_Manholes-981	218.7	Kirkland_Manholes-982	217.59	190.8	0.58	8	PVC	0.01	538	20	119	139	25.9		
Kirkland_Main-2010	Kirkland_Manholes-982	217.59	Kirkland_Manholes-983	215.91	138.4	1.21	8	PVC	0.01	777	25	124	149	19.2		
Kirkland_Main-2011	Kirkland_Manholes-983	215.91	Kirkland_Manholes-984	210.71	282.7	1.84	8	PVC	0.01	956	26	128	154	16.1		
Kirkland_Main-2012	Kirkland_Manholes-984	210.71	Kirkland_Manholes-985	205.92	47.8	10.03	8	PVC	0.01	2,232	29	132	161	7.2		
Kirkland_Main-2013	Kirkland_Manholes-1001	230.61	Kirkland_Manholes-1020	226.4	192.3	2.19	8	PVC	0.01	1,043	28	90	117	11.2		
Kirkland_Main-2014	Kirkland_Manholes-1000	240.25	Kirkland_Manholes-1001	230.61	249.9	3.86	8	PVC	0.01	1,385	26	85	112	8.1		
Kirkland_Main-2015	Kirkland_Manholes-999	246.1	Kirkland_Manholes-1000	240.25	246.4	2.37	8	PVC	0.01	1,086	25	81	106	9.7		
Kirkland_Main-2016	Kirkland_Manholes-972	246.27	Kirkland_Manholes-999	246.1	109.4	0.16	8	PVC	0.01	278	24	77	101	36.3		
Kirkland_Main-2017	Kirkland_Manholes-1002	227.29	Kirkland_Manholes-1003	219.05	401.3	2.05	8	PVC	0.01	1,010	2	4	6	0.6		
Kirkland_Main-2018	Kirkland_Manholes-1003	219.05	Kirkland_Manholes-1004	214.11	181.5	2.72	8	PVC	0.01	1,163	4	9	12	1.1		
Kirkland_Main-2019	Kirkland_Manholes-1006	216.58	Kirkland_Manholes-1007	215.09	213.6	0.7	8	PVC	0.01	589	4	9	12	2.1		
Kirkland_Main-2020	Kirkland_Manholes-1005	223.06	Kirkland_Manholes-1006	216.58	398.8	1.63	8	PVC	0.01	899	2	4	6	0.7		
Kirkland_Main-2023	Kirkland_Manholes-1007	215.09	Kirkland_Manholes-1004	214.11	335.8	0.29	8	PVC	0.01	381	5	13	18	4.8		
Kirkland_Main-2024	Kirkland_Manholes-1012	211.42	Kirkland_Manholes-1013	197.72	100.9	13.58	8	PVC	0.01	2,598	2	4	6	0.2		
Kirkland_Main-2025	Kirkland_Manholes-1013	197.72	Kirkland_Manholes-1014	187.16	124	8.52	8	PVC	0.01	2,057	3	9	11	0.5		
Kirkland_Main-2026	Kirkland_Manholes-1014	187.16	Kirkland_Manholes-1015	186.96	99	0.2	8	PVC	0.01	317	3	13	16	4.9		
Kirkland_Main-2027	Kirkland_Manholes-1015	186.96	Kirkland_Manholes-1016	185.35	120.5	1.34	8	PVC	0.01	815	5	17	22	2.7		
Kirkland_Main-2028	Kirkland_Manholes-1016	185.35	Kirkland_Manholes-1036	185.26	143	0.06	8	PVC	0.01	174	7	21	28	16.1		
Kirkland_Main-2029	Kirkland_Manholes-1036	185.26	Kirkland_Manholes-1030	184.08	404.9	0.29	10	PVC	0.01	690	7	26	32	4.7		
Kirkland_Main-2030	Kirkland_Manholes-1030	184.08	Kirkland_Manholes-1031	183.18	286.1	0.31	10	PVC	0.01	717	10	30	40	5.5		
Kirkland_Main-2031	Kirkland_Manholes-1034	183.86	Kirkland_Manholes-1031	183.18	169	0.4	8	PVC	0.01	445	1	4	5	1.1		
Kirkland_Main-2032	Kirkland_Manholes-1031	183.18	Kirkland_Manholes-1035	182.7	151.6	0.32	8	PVC	0.01	397	11	38	49	12.5		
Kirkland_Main-2033	Kirkland_Manholes-1032	177.81	Kirkland_Manholes-1033	173.21	285.6	1.61	8	PVC	0.01	895	3	9	12	1.3		
Kirkland_Main-2034	Kirkland_Manholes-1004	214.11	Kirkland_Manholes-1028	212.78	233.9	0.57	8	PVC	0.01	532	9	26	35	6.5		
Kirkland_Main-2035	Kirkland_Manholes-1009	214.27	Kirkland_Manholes-1008	211.28	293.5	1.02	8	Concrete	0.013	547	2	4	6	1.1	SM14-Ex-EX19	
Kirkland_Main-2036	Kirkland_Manholes-1028	212.78	Kirkland_Manholes-1008	211.28	261	0.57	8	Concrete	0.013	411	9	30	39	9.5	SM14-Ex-EX19	
Kirkland_Main-2037	Kirkland_Manholes-1008	211.28	Kirkland_Manholes-1029	210.29	108.6	0.91	8	Concrete	0.013	518	11	38	49	9.6	SM14-Ex-EX19	
Kirkland_Main-2038	Kirkland_Manholes-1029	210.29	Kirkland_Manholes-1010	207.69	265.5	0.98	8	Concrete	0.013	537	11	43	54	10	SM14-Ex-EX19	
Kirkland_Main-2039	Kirkland_Manholes-1010	207.69	Kirkland_Manholes-1017	205.5	77.5	2.83	8	Concrete	0.013	912	11	47	58	6.4	SM14-Ex-EX19	
Kirkland_Main-2040	Kirkland_Manholes-1022	213.66	Kirkland_Manholes-1023	207.88	245.2	2.36	8	Concrete	0.013	833	35	111	145	17.5	SM14-Ex-EX18	
Kirkland_Main-2041	Kirkland_Manholes-1023	207.88	Kirkland_Manholes-1017	205.5	153	1.56	8	Concrete	0.013	676	36	115	152	22.4	SM14-Ex-EX18	
Kirkland_Main-2042	Kirkland_Manholes-1017	205.5	Kirkland_Manholes-1018	179.75	288.9	8.91	8	Concrete	0.013	1,619	48	166	215	13.3	SM14-Ex-EX31	
Kirkland_Main-2043	Kirkland_Manholes-1025	183.2	Kirkland_Manholes-1026	149.27	241.9	14.02	8	PVC	0.01	2,640	3	4	7	0.3		
Kirkland_Main-2044	Kirkland_Manholes-1027	150.87	Kirkland_Manholes-1026	149.27	180	0.89	8	PVC	0.01	665	2	4	6	0.9		
Kirkland_Main-2045	Kirkland_Manholes-1021	230.72	Kirkland_Manholes-1020	230.54	45.4	0.4	6	Concrete	0.013	159	3	9	11	7	SM14-Ex-EX18	Drop Connection
Kirkland_Main-2046	Kirkland_Manholes-1020	226.4	Kirkland_Manholes-1019	216.75	175.1	5.51	8	Concrete	0.013	1,273	32	102	134	10.5	SM14-Ex-EX18	
Kirkland_Main-2047	Kirkland_Manholes-1019	216.75	Kirkland_Manholes-1022	213.66	284.9	1.08	8	Concrete	0.013	565	33	107	140	24.8	SM14-Ex-EX18	
Kirkland_Main-2050	Kirkland_Manholes-1037	180.8	Kirkland_Manholes-1032	177.81	192.3	1.56	8	PVC	0.01	879	2	4	6	0.7		
Kirkland_Main-2051	Kirkland_Manholes-1041	211.62	Kirkland_Manholes-1040	211.16	115.7	0.4	8	PVC	0.01	446	2	4	6	1.3		
Kirkland_Main-2052	Kirkland_Manholes-1040	211.16	Kirkland_Manholes-1039	191.93	181.5	10.59	8	PVC	0.01	2,295	3	9	11	0.5		
Kirkland_Main-2053	Kirkland_Manholes-1039	191.93	Kirkland_Manholes-1038	180.54	235.3	4.84	8	PVC	0.01	1,551	4	13	17	1.1		
Kirkland_Main-2054	Kirkland_Manholes-1038	180.54	Kirkland_Manholes-1042	180.42	296.4	0.04	8	PVC	0.01	140	21	81	102	73	SM14-2035-DF6	
Kirkland_Main-2055	Kirkland_Manholes-1045	212.56	Kirkland_Manholes-1044	190.19	362.7	6.17	8	PVC	0.01	1,751	3	4	7	0.4		
Kirkland_Main-2056	Kirkland_Manholes-1044	190.19	Kirkland_Manholes-1043	180.32	106.1	9.3	8	PVC	0.01	2,151	4	9	13	0.6		
Kirkland_Main-2057	Kirkland_Manholes-1042	180.42	Kirkland_Manholes-1043	180.32	14.1	0.71	8	PVC	0.01	594	22	85	107	18		
Kirkland_Main-2058	Kirkland_Manholes-1051	183.74	Kirkland_Manholes-1050	181.82	166.3	1.15	8	PVC	0.01	758	33	145	178	23.5		
Kirkland_Main-2059	Kirkland_Manholes-1050	181.82	Kirkland_Manholes-1049	169.63	230.3	5.29	8	PVC	0.01	1,622	40	149	189	11.7		
Kirkland_Main-2060	Kirkland_Manholes-1049	169.63	Kirkland_Manholes-1048	168.86	245.7	0.31	8	PVC	0.01	395	40	154	194	49.1		
Kirkland_Main-2061	Kirkland_Manholes-986	204.38	Kirkland_Manholes-1051	183.74	288.7	7.15	8	PVC	0.01	1,885	31	141	172	9.1		
Kirkland_Main-2062	Kirkland_Manholes-1048	168.86	Kirkland_Manholes-1047	166.5	308.6	0.76	8	PVC	0.01	617	46	158	204	33.1		

Existing - Peak Hour Flow - Pipe Capacity Table

Label	Upstream Node	Upstream Invert Elevation (ft)	Downstream Node	Downstream Invert Elevation (ft)	Length (ft)	Slope (%)	Diameter (in)	Material	Manning's n	Design Capacity (gpm)	Domestic Flow (gpm)	I/I Flow (gpm)	Total Flow (gpm)	Percent Full (%)	CIP No.	Notes
Kirkland_Main-2063	Kirkland_Manholes-1047	166.5	Kirkland_Manholes-1046	162.86	368.8	0.99	8	PVC	0.01	700	46	162	208	29.7		
Kirkland_Main-2064	Kirkland_Manholes-1053	228.57	Kirkland_Manholes-1089	214.64	105.1	13.25	8	PVC	0.01	2,566	1	32	33	1.3		
Kirkland_Main-2065	Kirkland_Manholes-1054	235.88	Kirkland_Manholes-1053	228.57	61.2	11.95	8	PVC	0.01	2,437	1	28	29	1.2		
Kirkland_Main-2066	Kirkland_Manholes-1062	265.12	Kirkland_Manholes-1055	254.27	156.2	6.95	8	PVC	0.01	1,858	6	20	26	1.4		
Kirkland_Main-2067	Kirkland_Manholes-1063	275.15	Kirkland_Manholes-1062	265.12	144.2	6.96	8	PVC	0.01	1,860	1	4	5	0.3		
Kirkland_Main-2068	Kirkland_Manholes-1064	278.57	Kirkland_Manholes-1062	265.12	154.9	8.68	8	PVC	0.01	2,078	4	12	16	0.8		
Kirkland_Main-2069	Kirkland_Manholes-1055	254.27	Kirkland_Manholes-1056	242.38	224	5.31	8	PVC	0.01	1,625	7	24	30	1.9		
Kirkland_Main-2070	Kirkland_Manholes-1056	242.38	Kirkland_Manholes-1057	237.15	108.2	4.83	8	PVC	0.01	1,550	8	28	36	2.3		
Kirkland_Main-2071	Kirkland_Manholes-1057	237.15	Kirkland_Manholes-1058	224.96	136.1	8.96	8	PVC	0.01	2,110	11	44	55	2.6		
Kirkland_Main-2072	Kirkland_Manholes-1059	243.26	Kirkland_Manholes-1057	237.15	201.9	3.03	8	PVC	0.01	1,227	3	12	15	1.2		
Kirkland_Main-2073	Kirkland_Manholes-1061	271.51	Kirkland_Manholes-1060	252.96	148.5	12.49	8	PVC	0.01	2,492	1	4	5	0.2		
Kirkland_Main-2074	Kirkland_Manholes-1060	252.96	Kirkland_Manholes-1059	243.26	83.7	11.58	8	PVC	0.01	2,400	2	8	10	0.4		
Kirkland_Main-2075	Kirkland_Manholes-1103	198.97	Kirkland_Manholes-1101	197.04	31	6.23	18	PVC	0.01	15,303	549	2,070	2,619	17.1		
Kirkland_Main-2076	Kirkland_Manholes-1102	199.75	Kirkland_Manholes-1101	197.04	30.1	8.99	8	PVC	0.01	2,114	3	40	42	2		
Kirkland_Main-2077	Kirkland_Manholes-1100	201.72	Kirkland_Manholes-1102	199.75	337.5	0.58	8	PVC	0.01	539	2	36	37	6.9		
Kirkland_Main-2078	Kirkland_Manholes-1093	203.29	Kirkland_Manholes-1100	201.72	272.4	0.58	8	PVC	0.01	535	0	32	32	6		
Kirkland_Main-2079	Kirkland_Manholes-1095	206.07	Kirkland_Manholes-1094	204.22	102	1.81	8	PVC	0.01	950	0	4	4	0.5		
Kirkland_Main-2080	Kirkland_Manholes-1094	204.22	Kirkland_Manholes-1093	203.29	43.7	2.13	8	PVC	0.01	1,028	0	8	8	0.8		
Kirkland_Main-2081	Kirkland_Manholes-1096	204.27	Kirkland_Manholes-1093	203.29	162.1	0.6	8	PVC	0.01	548	0	20	20	3.6		
Kirkland_Main-2082	Kirkland_Manholes-1098	205.6	Kirkland_Manholes-1097	204.86	78.1	0.95	8	PVC	0.01	686	0	4	4	0.6		
Kirkland_Main-2083	Kirkland_Manholes-1097	204.86	Kirkland_Manholes-1096	204.27	167.5	0.35	8	PVC	0.01	418	0	16	16	3.8		
Kirkland_Main-2084	Kirkland_Manholes-1099	211.44	Kirkland_Manholes-1097	204.86	308.5	2.13	8	PVC	0.01	1,030	0	8	8	0.8		
Kirkland_Main-2085	Kirkland_Manholes-1079	238.18	Kirkland_Manholes-1080	229.14	134.4	6.73	8	PVC	0.01	1,829	1	4	5	0.3		
Kirkland_Main-2086	Kirkland_Manholes-1080	229.14	Kirkland_Manholes-1081	226.1	255.6	1.19	8	PVC	0.01	769	63	258	321	41.7		
Kirkland_Main-2087	Kirkland_Manholes-1082	233.35	Kirkland_Manholes-1081	226.1	142.6	5.08	8	PVC	0.01	1,590	1	4	5	0.3		
Kirkland_Main-2088	Kirkland_Manholes-1081	226.1	Kirkland_Manholes-1070	224.89	260.5	0.46	8	PVC	0.01	481	64	266	331	68.8	SM14-2035-DF7	
Kirkland_Main-2089	Kirkland_Manholes-1069	247.48	Kirkland_Manholes-1070	224.89	321.6	7.02	8	PVC	0.01	1,869	64	226	467	25		
Kirkland_Main-2090	Kirkland_Manholes-1067	259.57	Kirkland_Manholes-1069	247.48	126	9.6	8	PVC	0.01	2,184	60	211	447	20.5		
Kirkland_Main-2091	Kirkland_Manholes-1071	277.81	Kirkland_Manholes-1067	259.57	242.2	7.53	8	PVC	0.01	1,935	15	60	74	3.8		
Kirkland_Main-2092	Kirkland_Manholes-1072	288.83	Kirkland_Manholes-1071	277.81	139.9	7.88	8	PVC	0.01	1,979	7	20	27	1.4		
Kirkland_Main-2093	Kirkland_Manholes-1077	252.59	Kirkland_Manholes-1069	247.48	346.5	1.47	8	PVC	0.01	856	4	12	16	1.8		
Kirkland_Main-2094	Kirkland_Manholes-1078	305.14	Kirkland_Manholes-1073	302.05	162.4	1.9	8	PVC	0.01	973	3	8	11	1.1		
Kirkland_Main-2095	Kirkland_Manholes-1073	302.05	Kirkland_Manholes-1072	288.83	375.1	3.52	8	PVC	0.01	1,324	6	16	22	1.6		
Kirkland_Main-2096	Kirkland_Manholes-1074	295.05	Kirkland_Manholes-1075	291.84	155.4	2.07	8	PVC	0.01	1,013	41	127	345	34		
Kirkland_Main-2097	Kirkland_Manholes-1076	298.68	Kirkland_Manholes-1074	295.05	108.2	3.36	8	PVC	0.01	1,291	41	123	340	26.3		
Kirkland_Main-2098	Kirkland_Manholes-1068	279.38	Kirkland_Manholes-1066	278.91	39.6	1.19	8	PVC	0.01	768	44	139	359	46.7		
Kirkland_Main-2099	Kirkland_Manholes-1066	278.91	Kirkland_Manholes-1065	260.88	143.1	12.6	8	PVC	0.01	2,502	44	143	363	14.5		
Kirkland_Main-2100	Kirkland_Manholes-1065	260.88	Kirkland_Manholes-1067	259.57	130	1.01	8	PVC	0.01	708	44	147	367	51.9		
Kirkland_Main-2101	Kirkland_Manholes-1090	254.86	Kirkland_Manholes-1091	251.69	82.2	3.86	8	PVC	0.01	1,385	1	16	17	1.2		
Kirkland_Main-2102	Kirkland_Manholes-1091	251.69	Kirkland_Manholes-1092	246.51	140.9	3.68	8	PVC	0.01	1,352	1	20	21	1.5		
Kirkland_Main-2103	Kirkland_Manholes-1092	246.51	Kirkland_Manholes-1054	235.88	141.8	7.5	8	PVC	0.01	1,931	1	24	25	1.3		
Kirkland_Main-2104	Kirkland_Manholes-1089	214.64	Kirkland_Manholes-1086	198.2	276	5.96	8	PVC	0.01	1,721	1	36	37	2.1		
Kirkland_Main-2105	Kirkland_Manholes-1088	203.98	Kirkland_Manholes-1087	203.79	103.7	0.19	8	PVC	0.01	306	5	4	8	2.8		
Kirkland_Main-2106	Kirkland_Manholes-1087	203.79	Kirkland_Manholes-1086	198.2	55.1	10.14	8	PVC	0.01	2,245	5	8	12	0.6		
Kirkland_Main-2107	Kirkland_Manholes-1070	224.89	Kirkland_Manholes-1083	220.88	227.5	1.76	8	PVC	0.01	936	130	497	802	85.7	SM14-Ex-EX321	
Kirkland_Main-2108	Kirkland_Manholes-2996	220.63	Kirkland_Manholes-1084	206.2	323.5	4.46	8	PVC	0.01	1,489	139	509	824	55.3		
Kirkland_Main-2109	Kirkland_Manholes-1058	224.96	Kirkland_Manholes-1084	206.2	342.8	5.47	8	PVC	0.01	1,649	12	48	59	3.6		
Kirkland_Main-2110	Kirkland_Manholes-1084	206.2	Kirkland_Manholes-1085	204.43	46.9	3.78	8	PVC	0.01	1,370	151	560	888	64.8		
Kirkland_Main-2111	Kirkland_Manholes-1101	197.04	Kirkland_Manholes-1104	196.79	207.5	0.12	18	PVC	0.01	2,123	552	2,114	2,666	125.6	SM14-Ex-EX22	
Kirkland_Main-2112	Kirkland_Manholes-1112	179.44	Kirkland_Manholes-1124	177.02	214.1	1.13	15	PVC	0.01	4,007	58	32	90	2.2		
Kirkland_Main-2113	Kirkland_Manholes-1113	180.6	Kirkland_Manholes-1112	179.44	131.8	0.88	15	PVC	0.01	3,535	50	24	74	2.1		
Kirkland_Main-2114	Kirkland_Manholes-1117	196.58	Kirkland_Manholes-1115	186.39	163.3	6.24	15	PVC	0.01	9,416	18	12	30	0.3		
Kirkland_Main-2115	Kirkland_Manholes-1116	180.36	Kirkland_Manholes-1112	179.44	120	0.77	8	PVC	0.01	617	3	4	7	1.2		
Kirkland_Main-2116	Kirkland_Manholes-1119	159.49	Kirkland_Manholes-1120	158.13	217.8	0.62	8	PVC	0.01	557	25	6	31	5.5		
Kirkland_Main-2117	Kirkland_Manholes-1126	164.51	Kirkland_Manholes-1127	163.92	310.2	0.19	20	Concrete	0.013	2,723	280	683	1,139	41.8	SM14-Ex-EX4	
Kirkland_Main-2118	Kirkland_Manholes-1134	223.76	Kirkland_Manholes-1131	191.56	280.1	11.49	8	Concrete	0.013	1,839	12	23	35	1.9	SM14-Ex-EX63	
Kirkland_Main-2119	Kirkland_Manholes-1137	231.81	Kirkland_Manholes-1135	210.01	166.8	13.07	6	Concrete	0.013	910	2	4	6	0.6	SM14-Ex-EX81	
Kirkland_Main-2120	Kirkland_Manholes-1135	210.01	Kirkland_Manholes-1131	191.56	334.9	5.51	8	Concrete	0.013	1,273	2	13	15	1.2	SM14-Ex-EX81	
Kirkland_Main-2121	Kirkland_Manholes-1136	213.62	Kirkland_Manholes-1135	210.01	85.6	4.22	8	Concrete	0.013	1,114	0	4	4	0.4	SM14-Ex-EX81	
Kirkland_Main-2122	Kirkland_Manholes-680	257.67	Kirkland_Manholes-679	257.45	31.1	0.71	8	PVC	0.01	593	19	24	43	7.3		
Kirkland_Main-2123	Kirkland_Manholes-679	257.45	Kirkland_Manholes-681	256.89	146.9	0.38	8	PVC	0.01	435	19	32	51	11.7		
Kirkland_Main-2124	Kirkland_Manholes-678	266.88	Kirkland_Manholes-679	257.45	86.2	10.93	8	PVC	0.01	2,331	0	4	4	0.2		

Existing - Peak Hour Flow - Pipe Capacity Table

Label	Upstream Node	Upstream Invert Elevation (ft)	Downstream Node	Downstream Invert Elevation (ft)	Length (ft)	Slope (%)	Diameter (in)	Material	Manning's n	Design Capacity (gpm)	Domestic Flow (gpm)	I/I Flow (gpm)	Total Flow (gpm)	Percent Full (%)	CIP No.	Notes
Kirkland_Main-2125	Kirkland_Manholes-682	258.64	Kirkland_Manholes-680	257.67	223	0.44	8	PVC	0.01	465	1	20	20	4.4		
Kirkland_Main-2126	Kirkland_Manholes-685	255.36	Kirkland_Manholes-1888	254.12	288.3	0.43	8	PVC	0.01	462	21	44	65	14		
Kirkland_Main-2127	Kirkland_Manholes-684	256.25	Kirkland_Manholes-685	255.36	200.3	0.44	8	PVC	0.01	469	19	40	59	12.6		
Kirkland_Main-2128	Kirkland_Manholes-1740	35.99	Kirkland_Manholes-1743	28.04	156.8	5.07	10	PVC	0.01	2,878	247	560	807	28		
Kirkland_Main-2129	Kirkland_Manholes-1757	18.99	Kirkland_Manholes-1756	15.01	53.7	7.42	8	Concrete	0.013	1,477	5	6	12	0.8	SM14-Ex-EX183	
Kirkland_Main-2130	Kirkland_Manholes-1756	15.01	Kirkland_Manholes-1758	14.89	54.1	0.21	12	Concrete	0.013	738	57	19	77	10.4	SM14-Ex-EX183	
Kirkland_Main-2131	Kirkland_Manholes-1758	14.89	Kirkland_Manholes-1759	14.76	60.8	0.23	12	Concrete	0.013	762	60	26	86	11.3	SM14-Ex-EX183	
Kirkland_Main-2132	Kirkland_Manholes-1759	14.76	Kirkland_Manholes-1789	14.67	38.9	0.21	12	Concrete	0.013	736	60	32	93	12.6	SM14-Ex-EX183	
Kirkland_Main-2133	Kirkland_Manholes-2067	19	Kirkland_Manholes-1756	15.01	217.5	1.84	12	Concrete	0.013	2,166	46	6	52	2.4	SM14-Ex-EX183	
Kirkland_Main-2134	Kirkland_Manholes-2305	15.26	Kirkland_Manholes-1755	15.12	124.7	0.11	21	PVC	0.01	3,097	267	675	942	30.4		
Kirkland_Main-2135	Kirkland_Manholes-1755	15.12	Kirkland_Manholes-1753	14.83	381.1	0.08	21	PVC	0.01	2,550	267	682	949	37.2		
Kirkland_Main-2136	Kirkland_Manholes-1753	14.83	Kirkland_Manholes-1754	14.75	34.9	0.23	21	PVC	0.01	4,426	272	688	961	21.7		
Kirkland_Main-2137	Kirkland_Manholes-1754	14.75	Kirkland_Manholes-1789	14.67	165.1	0.05	21	PVC	0.01	2,035	279	695	974	47.8		
Kirkland_Main-2138	Kirkland_Manholes-1692	35.9	Kirkland_Manholes-736	28.45	107.1	6.96	8	Concrete	0.013	1,431	60	272	332	23.2	SM14-Ex-EX96	
Kirkland_Main-2139	Kirkland_Manholes-1694	44.12	Kirkland_Manholes-1692	35.9	116.3	7.07	8	Concrete	0.013	1,442	56	255	312	21.6	SM14-Ex-EX96	
Kirkland_Main-2140	Kirkland_Manholes-1701	49.81	Kirkland_Manholes-1694	44.12	274.3	2.07	8	Concrete	0.013	781	4	16	20	2.6	SM14-Ex-EX152	
Kirkland_Main-2141	Kirkland_Manholes-1702	82.31	Kirkland_Manholes-1701	49.81	296.4	10.96	8	Concrete	0.013	1,796	1	8	9	0.5	SM14-Ex-EX152	
Kirkland_Main-2142	Kirkland_Manholes-1698	89.68	Kirkland_Manholes-1697	68.77	247.3	8.45	6	Concrete	0.013	732	1	8	10	1.3	SM14-Ex-EX151	
Kirkland_Main-2143	Kirkland_Manholes-1697	68.77	Kirkland_Manholes-1696	58.41	181	5.72	6	Concrete	0.013	603	5	16	21	3.5	SM14-Ex-EX151	
Kirkland_Main-2144	Kirkland_Manholes-614	87.89	Kirkland_Manholes-1696	58.41	277.2	10.64	8	Concrete	0.013	1,769	45	198	242	13.7	SM14-Ex-EX96	
Kirkland_Main-2145	Kirkland_Manholes-2025	477	Kirkland_Manholes-2024	470.6	42.9	14.92	8	PVC	0.01	2,724	6	12	18	0.7		
Kirkland_Main-2146	Kirkland_Manholes-2024	470.6	Kirkland_Manholes-2023	466.76	120.1	3.2	8	PVC	0.01	1,261	7	16	23	1.8		
Kirkland_Main-2147	Kirkland_Manholes-2019	467.83	Kirkland_Manholes-2022	466	273.9	0.67	10	PVC	0.01	1,045	99	246	345	33.1		
Kirkland_Main-2148	Kirkland_Manholes-2028	481.27	Kirkland_Manholes-2026	474.59	90.6	7.37	8	PVC	0.01	1,914	2	4	6	0.3		
Kirkland_Main-2149	Kirkland_Manholes-2029	479.06	Kirkland_Manholes-2027	477.1	283.3	0.69	8	PVC	0.01	586	21	75	97	16.5		
Kirkland_Main-2150	Kirkland_Manholes-2027	477.1	Kirkland_Manholes-2026	474.59	76.4	3.29	8	PVC	0.01	1,278	22	79	102	8		
Kirkland_Main-2151	Kirkland_Manholes-2026	474.59	Kirkland_Manholes-2021	473.17	135.7	1.05	8	PVC	0.01	721	24	87	111	15.4		
Kirkland_Main-2152	Kirkland_Manholes-2033	462.47	Kirkland_Manholes-2034	462.21	16.1	1.61	8	PVC	0.01	896	1	4	5	0.5		
Kirkland_Main-2153	Kirkland_Manholes-2034	462.21	Kirkland_Manholes-2032	461.07	176.2	0.65	8	PVC	0.01	567	1	8	9	1.6		Drop Connection
Kirkland_Main-2154	Kirkland_Manholes-2031	464.09	Kirkland_Manholes-2032	458.97	79	6.48	8	Concrete	0.013	1,381	109	282	392	28.4	SM14-Ex-EX264	
Kirkland_Main-2155	Kirkland_Manholes-2030	465.11	Kirkland_Manholes-2031	464.09	197.9	0.52	10	PVC	0.01	918	109	278	387	42.2		
Kirkland_Main-2156	Kirkland_Manholes-2022	466	Kirkland_Manholes-2030	465.11	389.3	0.23	10	PVC	0.01	611	107	270	377	61.7		
Kirkland_Main-2157	Kirkland_Manholes-2035	454.4	Kirkland_Manholes-2036	452.58	173.2	1.05	8	Concrete	0.013	556	113	298	411	73.8	SM14-Ex-EX264	
Kirkland_Main-2158	Kirkland_Manholes-2032	458.97	Kirkland_Manholes-2035	454.4	196.5	2.33	8	Concrete	0.013	827	112	294	406	49.1	SM14-Ex-EX264	
Kirkland_Main-2159	Kirkland_Manholes-2039	480.14	Kirkland_Manholes-2040	475.69	137	3.25	8	Concrete	0.013	977	5	8	13	1.3	SM14-Ex-EX266	
Kirkland_Main-2160	Kirkland_Manholes-2038	484.4	Kirkland_Manholes-2039	480.14	188.8	2.26	8	Concrete	0.013	815	1	4	5	0.6	SM14-Ex-EX266	
Kirkland_Main-2161	Kirkland_Manholes-2040	475.69	Kirkland_Manholes-2037	465.67	362.6	2.76	8	Concrete	0.013	902	7	12	19	2.1	SM14-Ex-EX266	
Kirkland_Main-2162	Kirkland_Manholes-2672	373.35	Kirkland_Manholes-2674	354.77	247.9	7.5	8	Concrete	0.013	1,485	14	79	93	6.3	SM14-Ex-EX209	
Kirkland_Main-2163	Kirkland_Manholes-2671	399.75	Kirkland_Manholes-2672	373.35	240.8	10.97	8	Concrete	0.013	1,796	13	75	88	4.9	SM14-Ex-EX209	
Kirkland_Main-2164	Kirkland_Manholes-2674	354.77	Kirkland_Manholes-2300	337.19	208.1	8.45	8	Concrete	0.013	1,576	15	83	98	6.2	SM14-Ex-EX209	
Kirkland_Main-2165	Kirkland_Manholes-2678	335.2	Kirkland_Manholes-2681	334.86	198.8	0.17	12	Concrete	0.013	661	37	167	204	30.8	SM14-Ex-EX206	
Kirkland_Main-2166	Kirkland_Manholes-2680	361.93	Kirkland_Manholes-2678	335.2	358.9	7.45	8	PVC	0.01	1,924	3	4	7	0.4		
Kirkland_Main-2167	Kirkland_Manholes-2677	336.2	Kirkland_Manholes-2678	335.2	208.7	0.48	12	Concrete	0.013	1,107	34	159	193	17.4	SM14-Ex-EX206	
Kirkland_Main-2168	Kirkland_Manholes-2676	336.73	Kirkland_Manholes-2677	336.2	133.1	0.4	12	Concrete	0.013	1,013	34	155	188	18.6	SM14-Ex-EX206	
Kirkland_Main-2169	Kirkland_Manholes-2675	350.82	Kirkland_Manholes-2676	336.73	223.6	6.3	8	Concrete	0.013	1,361	3	8	11	0.8	SM14-Ex-EX208	
Kirkland_Main-2170	Kirkland_Manholes-2300	337.19	Kirkland_Manholes-2676	336.73	113.6	0.4	12	Concrete	0.013	1,013	30	143	173	17	SM14-Ex-EX206	
Kirkland_Main-2171	Kirkland_Manholes-2697	234.26	Kirkland_Manholes-2245	234.09	42.8	0.4	8	PVC	0.01	444	2	4	6	1.3		
Kirkland_Main-2173	Kirkland_Manholes-2682	228.77	Kirkland_Manholes-2685	228.01	128.4	0.59	8	Concrete	0.013	417	4	12	16	3.9	SM14-Ex-EX201	
Kirkland_Main-2174	Kirkland_Manholes-2683	239.58	Kirkland_Manholes-2682	228.77	368.9	2.93	8	PVC	0.01	1,207	3	8	11	0.9		
Kirkland_Main-2175	Kirkland_Manholes-2684	244.68	Kirkland_Manholes-2683	239.58	150.1	3.4	8	PVC	0.01	1,300	1	4	5	0.4		
Kirkland_Main-2176	Kirkland_Manholes-2685	228.01	Kirkland_Manholes-2686	221.84	249.2	2.48	8	Concrete	0.013	853	5	16	21	2.5	SM14-Ex-EX201	
Kirkland_Main-2177	Kirkland_Manholes-2311	256.52	Kirkland_Manholes-2310	256	129.9	0.4	8	PVC	0.01	446	4	13	17	3.7		
Kirkland_Main-2178	Kirkland_Manholes-2688	231.59	Kirkland_Manholes-2687	227.79	162.1	2.34	8	PVC	0.01	1,080	3	8	11	1		
Kirkland_Main-2179	Kirkland_Manholes-2687	227.79	Kirkland_Manholes-2686	221.84	261.7	2.27	8	PVC	0.01	1,063	4	12	16	1.5		
Kirkland_Main-2180	Kirkland_Manholes-2689	235.04	Kirkland_Manholes-2688	231.59	174.6	1.98	8	PVC	0.01	991	2	4	6	0.6		
Kirkland_Main-2184	Kirkland_Manholes-2691	211.09	Kirkland_Manholes-2692	205.03	238.4	2.54	8	Concrete	0.013	865	12	40	51	6	SM14-Ex-EX201	
Kirkland_Main-2185	Kirkland_Manholes-2692	205.03	Kirkland_Manholes-2693	198.67	215	2.96	8	Concrete	0.013	933	12	44	56	6	SM14-Ex-EX201	
Kirkland_Main-2186	Kirkland_Manholes-2693	198.67	Kirkland_Manholes-2694	189.1	61.3	15.61	8	Concrete	0.013	2,142	13	48	60	2.8	SM14-Ex-EX201	
Kirkland_Main-2187	Kirkland_Manholes-2695	190.38	Kirkland_Manholes-2694	189.1	280.3	0.46	8	Concrete	0.013	366	0	4	4	1.1	SM14-Ex-EX201	
Kirkland_Main-2188	Kirkland_Manholes-2694	189.1	Kirkland_Manholes-2698	186.34	272.4	1.01	8	Concrete	0.013	546	13	56	69	12.6	SM14-Ex-EX198	
Kirkland_Main-2189	Kirkland_Manholes-2701	219.11	Kirkland_Manholes-2700	212.52	304.2	2.17	8	PVC	0.01	1,038	8	56	64	6.1		
Kirkland_Main-2190	Kirkland_Manholes-2700	212.52	Kirkland_Manholes-2699	190.07	286.1	7.85	8	Concrete	0.013	1,519	10	60	69	4.6	SM14-Ex-EX202	

Existing - Peak Hour Flow - Pipe Capacity Table

Label	Upstream Node	Upstream Invert Elevation (ft)	Downstream Node	Downstream Invert Elevation (ft)	Length (ft)	Slope (%)	Diameter (in)	Material	Manning's n	Design Capacity (gpm)	Domestic Flow (gpm)	I/I Flow (gpm)	Total Flow (gpm)	Percent Full (%)	CIP No.	Notes
Kirkland_Main-2191	Kirkland_Manholes-2699	190.07	Kirkland_Manholes-2696	172.94	342.2	5.01	8	Concrete	0.013	1,213	10	64	74	6.1	SM14-Ex-EX202	
Kirkland_Main-2192	Kirkland_Manholes-2706	252.55	Kirkland_Manholes-2704	250.11	196.5	1.24	8	PVC	0.01	786	0	4	4	0.5		
Kirkland_Main-2193	Kirkland_Manholes-2704	250.11	Kirkland_Manholes-2705	234.07	107.2	14.96	8	PVC	0.01	2,727	6	48	54	2		
Kirkland_Main-2194	Kirkland_Manholes-2705	234.07	Kirkland_Manholes-2701	219.11	291.8	5.13	8	PVC	0.01	1,596	8	52	60	3.7		
Kirkland_Main-2195	Kirkland_Manholes-2710	293.33	Kirkland_Manholes-2709	292.14	31.4	3.79	8	PVC	0.01	1,373	0	4	4	0.3		
Kirkland_Main-2197	Kirkland_Manholes-501	145.5	Kirkland_Manholes-502	134.98	294	3.58	6	Concrete	0.013	476	1	8	9	2	SM10	
Kirkland_Main-2198	Kirkland_Manholes-502	134.98	Kirkland_Manholes-1158	124.93	261.4	3.85	6	Concrete	0.013	494	3	16	19	3.9	SM10	
Kirkland_Main-2199	Kirkland_Manholes-1178	142.08	Kirkland_Manholes-1179	123.76	339.2	5.4	6	Concrete	0.013	585	5	25	30	5.1	SM10	
Kirkland_Main-2200	Kirkland_Manholes-1177	164.29	Kirkland_Manholes-1178	142.08	352.7	6.3	6	Concrete	0.013	632	3	16	19	3.1	SM10	
Kirkland_Main-2201	Kirkland_Manholes-1176	174.14	Kirkland_Manholes-1177	164.29	198.1	4.97	6	Concrete	0.013	562	1	8	9	1.7	SM10	
Kirkland_Main-2202	Kirkland_Manholes-1174	178.7	Kirkland_Manholes-1173	177.85	211.5	0.4	6	Concrete	0.013	159	2	8	10	6.2	SM10	Drop Connection
Kirkland_Main-2203	Kirkland_Manholes-1175	174.04	Kirkland_Manholes-1173	166.52	399.1	1.88	6	Concrete	0.013	346	2	8	10	2.9	SM10	
Kirkland_Main-2204	Kirkland_Manholes-1173	166.52	Kirkland_Manholes-1172	164.12	183.3	1.31	6	Concrete	0.013	288	6	25	31	10.7	SM10	
Kirkland_Main-2205	Kirkland_Manholes-1172	164.12	Kirkland_Manholes-1171	160.49	157.6	2.3	6	Concrete	0.013	382	7	33	40	10.5	SM14-Ex-EX79	
Kirkland_Main-2206	Kirkland_Manholes-2890	82	Kirkland_Manholes-1162	78.51	88.5	3.95	8	Ductile Iron	0.012	1,167	0	8	291	24.9	SM14-Ex-EX77	
Kirkland_Main-2207	Kirkland_Manholes-514	18.19	Kirkland_Manholes-2958	17.19	133.7	0.75	8	sbestos Ceme	0.011	554	30	212	242	43.6	SM14-Ex-EX37	
Kirkland_Main-2208	Kirkland_Manholes-493	145.66	Kirkland_Manholes-3107	127.14	403.7	4.59	8	Concrete	0.013	1,162	2	8	10	0.9	SM10	
Kirkland_Main-2209	Kirkland_Manholes-496	188.94	Kirkland_Manholes-495	169.48	399.8	4.87	8	Concrete	0.013	1,196	2	8	10	0.8	SM10	
Kirkland_Main-2210	Kirkland_Manholes-497	188.11	Kirkland_Manholes-499	185.94	314.9	0.69	8	Concrete	0.013	450	14	58	71	15.8	SM10	
Kirkland_Main-2211	Kirkland_Manholes-498	190.16	Kirkland_Manholes-499	185.94	340.1	1.24	6	Concrete	0.013	281	3	8	11	4	SM10	
Kirkland_Main-2213	Kirkland_Manholes-510	78.8	Kirkland_Manholes-509	76.43	10.6	22.33	15	PVC	0.01	17,810	5	41	46	0.3		
Kirkland_Main-2214	Kirkland_Manholes-513	81.7	Kirkland_Manholes-512	79.85	46	4.02	12	Ductile Iron	0.012	3,473	21	156	177	5.1	SM14-Ex-EX76	
Kirkland_Main-2215	Kirkland_Manholes-1825	112.27	Kirkland_Manholes-508	102	349.6	2.94	6	Concrete	0.013	432	4	16	20	4.7	SM10	
Kirkland_Main-2216	Kirkland_Manholes-508	102	Kirkland_Manholes-507	100.47	381.8	0.4	6	Concrete	0.013	159	5	25	30	18.8	SM10	Drop Connection
Kirkland_Main-2217	Kirkland_Manholes-507	85.74	Kirkland_Manholes-506	75.41	39.4	26.19	8	PVC	0.01	3,608	5	33	38	1.1		
Kirkland_Main-2218	Kirkland_Manholes-506	75.41	Kirkland_Manholes-505	74.06	314	0.43	15	PVC	0.01	2,471	88	593	963	39		
Kirkland_Main-2221	Kirkland_Manholes-505	74.06	Kirkland_Manholes-1824	72.16	261.9	0.73	15	PVC	0.01	3,210	88	601	971	30.3		
Kirkland_Main-2222	Kirkland_Manholes-509	76.43	Kirkland_Manholes-506	75.41	337.6	0.3	15	PVC	0.01	2,072	82	552	916	44.2		
Kirkland_Main-2224	Kirkland_Manholes-1160	77.11	Kirkland_Manholes-509	76.43	266.4	0.26	15	PVC	0.01	1,904	77	502	862	45.3		
Kirkland_Main-2225	Kirkland_Manholes-511	79.24	Kirkland_Manholes-1161	78.67	198.1	0.29	15	PVC	0.01	2,022	21	173	194	9.6		
Kirkland_Main-2226	Kirkland_Manholes-512	79.85	Kirkland_Manholes-511	79.24	306.1	0.2	15	PVC	0.01	1,683	21	165	186	11		
Kirkland_Main-2228	Kirkland_Manholes-1533	294.07	Kirkland_Manholes-1532	269.21	121	20.55	8	Concrete	0.013	2,459	2	12	14	0.6	SM14-Ex-EX126	
Kirkland_Main-2229	Kirkland_Manholes-1532	269.21	Kirkland_Manholes-1531	265.03	88.5	4.72	8	Concrete	0.013	1,179	2	16	18	1.5	SM14-Ex-EX126	
Kirkland_Main-2230	Kirkland_Manholes-1211	186.99	Kirkland_Manholes-1197	181.82	133.6	3.87	8		0.012	1,156	1	33	34	3		
Kirkland_Main-2231	Kirkland_Manholes-1531	265.03	Kirkland_Manholes-1530	229.92	439.6	7.99	8	Concrete	0.013	1,533	10	28	38	2.5	SM14-Ex-EX125	
Kirkland_Main-2232	Kirkland_Manholes-1530	229.92	Kirkland_Manholes-1529	223.45	269.7	2.4	8	Concrete	0.013	840	33	107	141	16.7	SM14-Ex-EX121	
Kirkland_Main-2233	Kirkland_Manholes-1529	223.45	Kirkland_Manholes-1528	217.87	160.3	3.48	8	Concrete	0.013	1,012	35	111	146	14.5	SM14-Ex-EX121	
Kirkland_Main-2235	Kirkland_Manholes-1249	223.25	Kirkland_Manholes-1250	210.15	250.9	5.22	8	Concrete	0.013	1,239	15	99	114	9.2	SM14-Ex-EX65	
Kirkland_Main-2236	Kirkland_Manholes-1246	238.47	Kirkland_Manholes-1247	236.99	105.6	1.4	8	Concrete	0.013	642	11	58	69	10.7	SM14-Ex-EX65	
Kirkland_Main-2237	Kirkland_Manholes-1248	254.12	Kirkland_Manholes-1247	236.99	222.2	7.71	8	Concrete	0.013	1,506	1	8	9	0.6	SM14-Ex-EX97	
Kirkland_Main-2238	Kirkland_Manholes-1245	243.41	Kirkland_Manholes-1246	238.47	272.7	1.81	8	Concrete	0.013	730	9	49	59	8	SM14-Ex-EX65	
Kirkland_Main-2239	Kirkland_Manholes-1244	254.14	Kirkland_Manholes-1245	243.41	231.8	4.63	8	Concrete	0.013	1,167	2	8	10	0.8	SM14-Ex-EX65	
Kirkland_Main-2240	Kirkland_Manholes-1242	244.28	Kirkland_Manholes-208	241.09	154	2.07	8	Concrete	0.013	781	2	9	11	1.4	SM14-Ex-EX61	
Kirkland_Main-2241	Kirkland_Manholes-1237	263.8	Kirkland_Manholes-1236	256.67	250.6	2.84	8	Concrete	0.013	915	1	4	5	0.6	SM14-Ex-EX60	
Kirkland_Main-2242	Kirkland_Manholes-1239	270.66	Kirkland_Manholes-1238	263.26	225.6	3.28	8	Concrete	0.013	982	3	8	11	1.1	SM14-Ex-EX95	
Kirkland_Main-2244	Kirkland_Manholes-1234	275.2	Kirkland_Manholes-1233	274.4	31.3	2.55	6	Concrete	0.013	402	1	8	9	2.4	SM14-Ex-EX96	
Kirkland_Main-2245	Kirkland_Manholes-1233	274.4	Kirkland_Manholes-1232	271.55	317	0.9	6	Concrete	0.013	239	5	25	30	12.5	SM14-Ex-EX96	
Kirkland_Main-2246	Kirkland_Manholes-1232	271.55	Kirkland_Manholes-1231	254.08	347.6	5.03	6	Concrete	0.013	565	8	33	41	7.2	SM14-Ex-EX96	
Kirkland_Main-2247	Kirkland_Manholes-1231	254.08	Kirkland_Manholes-1230	236.32	352.2	5.04	6	Concrete	0.013	566	12	41	53	9.3	SM14-Ex-EX96	
Kirkland_Main-2248	Kirkland_Manholes-1414	476.69	Kirkland_Manholes-1415	475.19	382.9	0.39	8	PVC	0.01	441	1	20	20	4.6		
Kirkland_Main-2249	Kirkland_Manholes-1416	475.58	Kirkland_Manholes-1415	475.19	141	0.28	8	PVC	0.01	371	3	20	23	6.1		
Kirkland_Main-2250	Kirkland_Manholes-1417	477.64	Kirkland_Manholes-1416	475.58	44.3	4.65	8	PVC	0.01	1,521	2	16	18	1.2		
Kirkland_Main-2251	Kirkland_Manholes-1419	480.31	Kirkland_Manholes-1418	477.42	188.2	1.54	8	PVC	0.01	874	1	12	12	1.4		
Kirkland_Main-2252	Kirkland_Manholes-1420	487.42	Kirkland_Manholes-1419	480.31	251.4	2.83	8	PVC	0.01	1,186	0	8	8	0.7		
Kirkland_Main-2253	Kirkland_Manholes-1421	490.08	Kirkland_Manholes-1420	487.42	280.7	0.95	8	PVC	0.01	686	0	4	4	0.6		
Kirkland_Main-2255	Kirkland_Manholes-1422	436.01	Kirkland_Manholes-1423	431.09	115.7	4.25	8	PVC	0.01	1,454	4	2	6	0.4		
Kirkland_Main-2256	Kirkland_Manholes-1423	431.09	Kirkland_Manholes-1424	424.73	75.1	8.47	8	PVC	0.01	2,052	5	5	10	0.5		
Kirkland_Main-2257	Kirkland_Manholes-1424	424.73	Kirkland_Manholes-1425	416.33	120.8	6.95	8	PVC	0.01	1,859	6	7	13	0.7		
Kirkland_Main-2258	Kirkland_Manholes-1425	416.33	Kirkland_Manholes-2514	400.04	156.3	10.42	8	PVC	0.01	2,276	8	9	17	0.8		
Kirkland_Main-2260	Kirkland_Manholes-1426	513.73	Kirkland_Manholes-1427	513.21	150.6	0.34	8	PVC	0.01	413	2	4	6	1.5		
Kirkland_Main-2261	Kirkland_Manholes-2186	104.5	Kirkland_Manholes-2185	103.23	40.6	3.13	8	PVC	0.01	1,248	21	41	62	4.9		
Kirkland_Main-2262	Kirkland_Manholes-2188	116.01	Kirkland_Manholes-2187	114.37	29.7	5.52	8	PVC	0.01	1,657	0	8	9	0.5		

Existing - Peak Hour Flow - Pipe Capacity Table

Label	Upstream Node	Upstream Invert Elevation (ft)	Downstream Node	Downstream Invert Elevation (ft)	Length (ft)	Slope (%)	Diameter (in)	Material	Manning's n	Design Capacity (gpm)	Domestic Flow (gpm)	I/I Flow (gpm)	Total Flow (gpm)	Percent Full (%)	CIP No.	Notes
Kirkland_Main-2263	Kirkland_Manholes-2192	135.5	Kirkland_Manholes-2191	134.63	54	1.61	8	PVC	0.01	895	0	8	8	0.9		
Kirkland_Main-2265	Kirkland_Manholes-2120	156.16	O-33	155.88	68.2	0.41	8	PVC	0.01	452	2	4	6	1.3		
Kirkland_Main-2266	Kirkland_Manholes-2121	179.17	Kirkland_Manholes-2122	169.1	148.2	6.79	8	Concrete	0.013	1,414	1	4	5	0.4	SM14-Ex-EX238	
Kirkland_Main-2267	Kirkland_Manholes-2122	169.1	Kirkland_Manholes-2123	164.83	234.6	1.82	8	Concrete	0.013	732	2	8	10	1.4	SM14-Ex-EX238	
Kirkland_Main-2268	Kirkland_Manholes-2200	29.87	Kirkland_Manholes-2202	26.91	11.2	26.5	8	PVC	0.01	3,629	49	19	68	1.9		Slope confirmed by as-builts
Kirkland_Main-2270	Kirkland_Manholes-2209	69.6	Kirkland_Manholes-2206	66.42	347.3	0.92	6	Concrete	0.013	241	1	8	9	3.8	SM8	
Kirkland_Main-2271	Kirkland_Manholes-2208	66.31	Kirkland_Manholes-2207	65.6	145.2	0.49	6	Concrete	0.013	176	0	6	7	3.9	SM14-Ex-EX189	Drop Connection
Kirkland_Main-2272	Kirkland_Manholes-2216	56.6	Kirkland_Manholes-2217	22.48	221.2	15.42	8	PVC	0.01	2,769	4	32	37	1.3		
Kirkland_Main-2273	Kirkland_Manholes-2215	67.8	Kirkland_Manholes-2214	67.15	122.4	0.53	8	PVC	0.01	514	2	6	8	1.6		
Kirkland_Main-2274	Kirkland_Manholes-2214	67.15	Kirkland_Manholes-2213	66.3	36.8	2.31	8	PVC	0.01	1,071	2	13	15	1.4		
Kirkland_Main-2275	Kirkland_Manholes-2213	66.3	Kirkland_Manholes-2216	56.6	199.9	4.85	8	PVC	0.01	1,553	3	26	29	1.9		
Kirkland_Main-2276	Kirkland_Manholes-2212	72.13	Kirkland_Manholes-2213	66.3	100	5.83	6	Concrete	0.013	608	1	6	8	1.3	SM14-Ex-EX190	
Kirkland_Main-2278	Kirkland_Manholes-2124	217.78	Kirkland_Manholes-2303	195.57	353.2	6.29	8	Concrete	0.013	1,360	253	886	1,139	83.8	SM14-Ex-EX248	
Kirkland_Main-2280	Kirkland_Manholes-1463	498.43	Kirkland_Manholes-1464	490.77	337.1	2.27	8	Concrete	0.013	817	6	16	22	2.6	SM14-Ex-EX271	
Kirkland_Main-2281	Kirkland_Manholes-1465	496.7	Kirkland_Manholes-1464	490.77	350	1.69	8	Concrete	0.013	706	5	12	17	2.4	SM14-Ex-EX272	
Kirkland_Main-2282	Kirkland_Manholes-1464	490.77	Kirkland_Manholes-1469	490.09	171.1	0.4	8	Concrete	0.013	343	12	32	44	12.9	SM14-Ex-EX271	
Kirkland_Main-2283	Kirkland_Manholes-1466	501.75	Kirkland_Manholes-1465	496.7	399.1	1.27	8	Concrete	0.013	610	3	8	11	1.7	SM14-Ex-EX272	
Kirkland_Main-2284	Kirkland_Manholes-1467	507	Kirkland_Manholes-1466	501.75	336.1	1.56	8	Concrete	0.013	678	1	4	5	0.7	SM14-Ex-EX272	
Kirkland_Main-2285	Kirkland_Manholes-1470	502.07	Kirkland_Manholes-1475	484.92	351.8	4.88	8	Concrete	0.013	1,198	1	4	5	0.4	SM14-Ex-EX268	
Kirkland_Main-2286	Kirkland_Manholes-1471	502.1	Kirkland_Manholes-1472	489.92	152.5	7.99	8	Concrete	0.013	1,533	1	4	5	0.3	SM14-Ex-EX267	
Kirkland_Main-2287	Kirkland_Manholes-1472	489.92	Kirkland_Manholes-1473	489.3	149.9	0.41	8	Concrete	0.013	349	3	8	11	3	SM14-Ex-EX267	
Kirkland_Main-2288	Kirkland_Manholes-1473	489.3	Kirkland_Manholes-1474	483.04	397.5	1.57	8	Concrete	0.013	681	4	12	16	2.3	SM14-Ex-EX267	
Kirkland_Main-2289	Kirkland_Manholes-1474	483.04	Kirkland_Manholes-1478	480.02	383.8	0.79	8	Concrete	0.013	481	6	16	22	4.5	SM14-Ex-EX267	
Kirkland_Main-2290	Kirkland_Manholes-1475	484.92	Kirkland_Manholes-1476	483.18	394.8	0.44	8	Concrete	0.013	360	2	8	10	2.7	SM14-Ex-EX268	
Kirkland_Main-2291	Kirkland_Manholes-1476	483.18	Kirkland_Manholes-1477	477.36	143.4	4.06	8	Concrete	0.013	1,093	3	12	15	1.4	SM14-Ex-EX268	
Kirkland_Main-2292	Kirkland_Manholes-1477	477.36	Kirkland_Manholes-1481	462.54	116.7	12.7	8	Concrete	0.013	1,933	3	16	19	1	SM14-Ex-EX268	
Kirkland_Main-2293	Kirkland_Manholes-1478	480.02	Kirkland_Manholes-1479	473.98	182.8	3.3	8	Concrete	0.013	986	7	20	27	2.7	SM14-Ex-EX267	
Kirkland_Main-2294	Kirkland_Manholes-1479	473.98	Kirkland_Manholes-1483	455.88	188.4	9.61	8	Concrete	0.013	1,681	8	24	32	1.9	SM14-Ex-EX267	
Kirkland_Main-2295	Kirkland_Manholes-1482	457.77	Kirkland_Manholes-1483	455.88	220.6	0.86	8	Concrete	0.013	502	55	242	298	59.3	SM14-Ex-EX214	
Kirkland_Main-2296	Kirkland_Manholes-1483	455.88	Kirkland_Manholes-2042	455.6	242	0.12	8	Concrete	0.013	184	64	270	334	181.1	SM14-Ex-EX214	
Kirkland_Main-2297	Kirkland_Manholes-1480	465.84	Kirkland_Manholes-1482	457.77	216.4	3.73	8	Concrete	0.013	1,047	51	219	270	25.8	SM14-Ex-EX214	
Kirkland_Main-2298	Kirkland_Manholes-2162	123.07	Kirkland_Manholes-2139	96.6	399.7	6.62	8	Concrete	0.013	1,396	4	16	21	1.5	SM14-Ex-EX194	
Kirkland_Main-2299	Kirkland_Manholes-2161	148.95	Kirkland_Manholes-2162	123.07	410.6	6.3	6	Concrete	0.013	632	1	8	9	1.5	SM14-Ex-EX194	
Kirkland_Main-2300	Kirkland_Manholes-2239	125.2	Kirkland_Manholes-2238	92.13	326.8	10.12	8	Concrete	0.013	1,725	2	6	8	0.5	SM14-Ex-EX224	
Kirkland_Main-2301	Kirkland_Manholes-2241	73.4	Kirkland_Manholes-2240	69.07	226.1	1.92	8	PVC	0.01	976	2	6	8	0.8		
Kirkland_Main-2302	Kirkland_Manholes-2159	84.71	Kirkland_Manholes-2240	69.07	248.4	6.3	8	PVC	0.01	1,769	18	65	83	4.7		
Kirkland_Main-2303	Kirkland_Manholes-2243	51.95	Kirkland_Manholes-2244	43.69	203.1	4.07	8	PVC	0.01	1,422	2	6	8	0.6		
Kirkland_Main-2304	Kirkland_Manholes-2240	69.07	Kirkland_Manholes-2244	43.69	271.1	9.36	8	PVC	0.01	2,157	21	78	99	4.6		
Kirkland_Main-2305	Kirkland_Manholes-2244	43.69	Kirkland_Manholes-2155	42.84	213.7	0.4	8	PVC	0.01	446	26	91	117	26.3		Drop Connection
Kirkland_Main-2306	Kirkland_Manholes-2494	170.93	Kirkland_Manholes-2132	159.52	411.9	2.77	8	Concrete	0.013	903	16	24	40	4.4	SM14-Ex-EX236	
Kirkland_Main-2307	Kirkland_Manholes-2242	36.17	Kirkland_Manholes-2317	17.2	251	7.56	8	Concrete	0.013	1,491	2	6	8	0.5	SM14-Ex-EX191	
Kirkland_Main-2308	Kirkland_Manholes-2229	22.53	Kirkland_Manholes-2313	22.37	40.9	0.4	8	PVC	0.01	446	15	39	54	12.1		Drop Connection
Kirkland_Main-2309	Kirkland_Manholes-2228	23.08	Kirkland_Manholes-2314	22.81	66.4	0.4	8	PVC	0.01	446	18	78	96	21.5		Drop Connection
Kirkland_Main-2311	Kirkland_Manholes-2257	348.17	Kirkland_Manholes-2256	329.88	184.1	9.94	8	Concrete	0.013	1,709	1	4	5	0.3	SM14-Ex-EX254	
Kirkland_Main-2312	Kirkland_Manholes-2267	393.07	Kirkland_Manholes-2266	392.8	100.8	0.27	8	PVC	0.01	365	2	16	18	4.9		
Kirkland_Main-2313	Kirkland_Manholes-2715	29.78	Kirkland_Manholes-2716	29.3	129	0.37	12	PVC	0.01	1,268	74	18	92	7.3		
Kirkland_Main-2314	Kirkland_Manholes-2716	29.3	Kirkland_Manholes-2717	21.61	141.2	5.45	12	PVC	0.01	4,851	74	24	98	2		
Kirkland_Main-2315	Kirkland_Manholes-2717	21.61	Kirkland_Manholes-2718	21.4	363.5	0.06	12	PVC	0.01	500	74	30	104	20.8		
Kirkland_Main-2316	Kirkland_Manholes-2052	419.8	Kirkland_Manholes-2280	418.85	171.1	0.56	8	Concrete	0.013	404	1	4	5	1.2	SM14-Ex-EX262	
Kirkland_Main-2317	Kirkland_Manholes-2280	418.85	Kirkland_Manholes-2279	418	153.8	0.55	8	Concrete	0.013	403	2	8	10	2.4	SM14-Ex-EX262	
Kirkland_Main-2318	Kirkland_Manholes-2274	417.36	Kirkland_Manholes-2273	414.69	101.2	2.64	8	PVC	0.01	1,145	1	4	5	0.5		
Kirkland_Main-2319	Kirkland_Manholes-2279	418	Kirkland_Manholes-2268	401.9	291.9	5.52	8	Concrete	0.013	1,274	3	12	15	1.2	SM14-Ex-EX262	
Kirkland_Main-2320	Kirkland_Manholes-2268	401.9	Kirkland_Manholes-2269	398.2	115.6	3.2	8	Concrete	0.013	970	14	64	78	8	SM14-Ex-EX261	
Kirkland_Main-2321	Kirkland_Manholes-2270	403.21	Kirkland_Manholes-2269	398.2	107.6	4.66	8	PVC	0.01	1,521	4	36	40	2.6		
Kirkland_Main-2322	Kirkland_Manholes-2273	414.69	Kirkland_Manholes-2272	410.23	107.4	4.15	8	PVC	0.01	1,437	2	8	10	0.7		
Kirkland_Main-2323	Kirkland_Manholes-2272	410.23	Kirkland_Manholes-2271	405.49	51.3	9.24	8	PVC	0.01	2,143	2	12	14	0.6		
Kirkland_Main-2324	Kirkland_Manholes-2271	405.49	Kirkland_Manholes-2270	403.21	91.2	2.5	8	PVC	0.01	1,115	4	32	36	3.2		
Kirkland_Main-2325	Kirkland_Manholes-2276	410.45	Kirkland_Manholes-2277	408.15	110.4	2.08	8	PVC	0.01	1,017	2	8	10	0.9		
Kirkland_Main-2326	Kirkland_Manholes-2277	408.15	Kirkland_Manholes-2278	406.74	80.9	1.74	8	PVC	0.01	931	2	12	14	1.5		
Kirkland_Main-2327	Kirkland_Manholes-1228	189.87	Kirkland_Manholes-1227	174.57	207.5	7.37	8	Concrete	0.013	1,473	22	74	96	6.5	SM14-Ex-EX96	
Kirkland_Main-2329	Kirkland_Manholes-1226	185.47	Kirkland_Manholes-1227	174.57	349.3	3.12	6	Concrete	0.013	445	2	8	11	2.4	SM14-Ex-EX93	
Kirkland_Main-2333	Kirkland_Manholes-1209	251.94	Kirkland_Manholes-1208	237.71	314.7	4.52	6	Concrete	0.013	535	10	31	41	7.6	SM14-Ex-EX90	

Existing - Peak Hour Flow - Pipe Capacity Table

Label	Upstream Node	Upstream Invert Elevation (ft)	Downstream Node	Downstream Invert Elevation (ft)	Length (ft)	Slope (%)	Diameter (in)	Material	Manning's n	Design Capacity (gpm)	Domestic Flow (gpm)	I/I Flow (gpm)	Total Flow (gpm)	Percent Full (%)	CIP No.	Notes
Kirkland_Main-2335	Kirkland_Manholes-1210	257.02	Kirkland_Manholes-1209	251.94	317.5	1.6	6	Concrete	0.013	319	7	23	30	9.4	SM14-Ex-EX90	
Kirkland_Main-2341	Kirkland_Manholes-1214	261.31	Kirkland_Manholes-1215	243.02	404.6	4.52	8	Concrete	0.013	1,153	5	11	16	1.4	SM14-Ex-EX90	
Kirkland_Main-2342	Kirkland_Manholes-1241	267.65	Kirkland_Manholes-1215	243.02	241.5	10.2	8	Concrete	0.013	1,732	3	4	7	0.4	SM14-Ex-EX63	
Kirkland_Main-2343	Kirkland_Manholes-1215	243.02	Kirkland_Manholes-1134	223.76	275.3	7	8	Concrete	0.013	1,435	10	19	29	2	SM14-Ex-EX63	
Kirkland_Main-2344	Kirkland_Manholes-1217	232.97	Kirkland_Manholes-1218	220.85	252.7	4.8	8	Concrete	0.013	1,188	1	4	5	0.5	SM14-Ex-EX59	
Kirkland_Main-2345	Kirkland_Manholes-1270	246.8	Kirkland_Manholes-1245	243.41	285.9	1.19	8	Concrete	0.013	591	1	8	9	1.5	SM14-Ex-EX64	
Kirkland_Main-2348	Kirkland_Manholes-1276	172.95	Kirkland_Manholes-1279	163.99	169.3	5.29	8	PVC	0.01	1,622	4	16	20	1.2		
Kirkland_Main-2349	Kirkland_Manholes-1569	157.57	Kirkland_Manholes-1293	152.35	333.3	1.57	6	Concrete	0.013	315	4	8	12	3.9	SM14-Ex-EX113	
Kirkland_Main-2350	Kirkland_Manholes-1293	152.35	Kirkland_Manholes-1292	148.28	368.4	1.1	6	Concrete	0.013	265	8	16	24	9.1	SM14-Ex-EX113	
Kirkland_Main-2351	Kirkland_Manholes-1568	145.18	Kirkland_Manholes-1297	132.74	335	3.71	6	Concrete	0.013	485	2	8	11	2.2	SM14-Ex-EX114	
Kirkland_Main-2352	Kirkland_Manholes-1297	132.74	Kirkland_Manholes-1296	129.32	308.3	1.11	6	Concrete	0.013	265	4	16	20	7.7	SM14-Ex-EX114	
Kirkland_Main-2353	Kirkland_Manholes-1281	154.69	Kirkland_Manholes-1292	148.28	310.6	2.06	8	Concrete	0.013	779	46	247	293	37.6	SM14-Ex-EX102	
Kirkland_Main-2354	Kirkland_Manholes-1292	148.28	Kirkland_Manholes-1296	129.32	322	5.89	8	Concrete	0.013	1,316	56	272	327	24.9	SM14-Ex-EX102	
Kirkland_Main-2357	Kirkland_Manholes-1266	188.85	Kirkland_Manholes-1264	172.1	141.2	11.87	8	PVC	0.01	2,429	1	8	9	0.4		
Kirkland_Main-2358	Kirkland_Manholes-1264	172.1	Kirkland_Manholes-1265	168.12	70.1	5.67	8	PVC	0.01	1,679	1	16	18	1.1		
Kirkland_Main-2363	Kirkland_Manholes-1273	182.86	Kirkland_Manholes-1274	175.64	151.8	4.76	8	PVC	0.01	1,538	5	25	30	1.9		
Kirkland_Main-2364	Kirkland_Manholes-1252	181.71	Kirkland_Manholes-1277	163.83	245.6	7.28	8	Concrete	0.013	1,463	37	189	226	15.5	SM14-Ex-EX101	
Kirkland_Main-2365	Kirkland_Manholes-1277	163.83	Kirkland_Manholes-1278	160.09	110.9	3.37	8	Concrete	0.013	996	38	198	235	23.6	SM14-Ex-EX102	
Kirkland_Main-2366	Kirkland_Manholes-1278	160.09	Kirkland_Manholes-1280	156.25	144.5	2.66	8	Concrete	0.013	884	43	231	273	30.9	SM14-Ex-EX102	
Kirkland_Main-2367	Kirkland_Manholes-1280	156.25	Kirkland_Manholes-1281	154.69	317.7	0.49	8	Concrete	0.013	380	45	239	284	74.6	SM14-Ex-EX102	
Kirkland_Main-2369	Kirkland_Manholes-1311	230.66	Kirkland_Manholes-1312	230.27	96.9	0.4	8	PVC	0.01	446	0	4	4	1		
Kirkland_Main-2370	Kirkland_Manholes-1313	230.7	Kirkland_Manholes-1312	230.27	76.5	0.56	8	PVC	0.01	528	3	13	16	3.1		
Kirkland_Main-2371	Kirkland_Manholes-1312	230.27	Kirkland_Manholes-1306	225.07	369.5	1.41	8	PVC	0.01	836	4	21	25	3		
Kirkland_Main-2372	Kirkland_Manholes-1513	263.11	Kirkland_Manholes-1515	261.7	138	1.02	8	Concrete	0.013	548	33	143	176	32.2	SM14-Ex-EX131	
Kirkland_Main-2373	Kirkland_Manholes-1508	264.2	Kirkland_Manholes-1514	263.47	179.7	0.41	8	Ductile Iron	0.012	375	31	131	162	43.2	SM14-Ex-EX131	
Kirkland_Main-2374	Kirkland_Manholes-1684	76.22	Kirkland_Manholes-1683	75.33	41.4	2.15	8	PVC	0.01	1,034	3	8	11	1		
Kirkland_Main-2375	Kirkland_Manholes-1851	275	Kirkland_Manholes-1316	272.4	254.5	1.02	8	PVC	0.01	713	1	8	9	1.3		
Kirkland_Main-2376	Kirkland_Manholes-1317	271.64	Kirkland_Manholes-924	268.15	334	1.04	12	PVC	0.01	2,125	108	425	533	25.1		
Kirkland_Main-2377	Kirkland_Manholes-2984	277.63	Kirkland_Manholes-1317	271.64	132.6	4.52	10	PVC	0.01	2,717	106	373	479	17.6		
Kirkland_Main-2378	Kirkland_Manholes-1371	376.15	Kirkland_Manholes-3081	373.55	185	1.41	8	PVC	0.01	836	65	179	244	29.2		
Kirkland_Main-2379	Kirkland_Manholes-1319	372.4	Kirkland_Manholes-1318	358.26	123	11.5	8	PVC	0.01	2,391	67	191	258	10.8		
Kirkland_Main-2380	Kirkland_Manholes-1318	358.26	Kirkland_Manholes-1320	342.61	140.9	11.1	10	PVC	0.01	4,260	67	195	262	6.2		
Kirkland_Main-2381	Kirkland_Manholes-1320	342.61	Kirkland_Manholes-1326	321.42	151.5	13.98	10	PVC	0.01	4,780	92	262	354	7.4		
Kirkland_Main-2382	Kirkland_Manholes-1514	263.47	Kirkland_Manholes-1513	263.11	127.9	0.28	8	Ductile Iron	0.012	312	32	135	167	53.6	SM14-Ex-EX131	
Kirkland_Main-2383	Kirkland_Manholes-1507	265.94	Kirkland_Manholes-1508	264.2	288.2	0.6	8	Ductile Iron	0.012	456	27	115	143	31.2	SM14-Ex-EX131	
Kirkland_Main-2384	Kirkland_Manholes-1322	342.78	Kirkland_Manholes-1320	342.61	36.2	0.47	8	PVC	0.01	483	24	64	88	18.1		
Kirkland_Main-2385	Kirkland_Manholes-1321	355.4	Kirkland_Manholes-1322	342.78	269.6	4.68	8	PVC	0.01	1,525	23	60	83	5.4		
Kirkland_Main-2386	Kirkland_Manholes-1335	367.98	Kirkland_Manholes-1321	355.4	137.9	9.12	8	PVC	0.01	2,129	22	56	78	3.6		
Kirkland_Main-2387	Kirkland_Manholes-1323	332.91	Kirkland_Manholes-1324	332.34	49.4	1.15	8	PVC	0.01	757	1	4	5	0.7		
Kirkland_Main-2388	Kirkland_Manholes-1324	332.34	Kirkland_Manholes-1325	323.2	121	7.55	8	PVC	0.01	1,938	1	8	9	0.5		
Kirkland_Main-2389	Kirkland_Manholes-1325	323.2	Kirkland_Manholes-1326	321.42	174.1	1.02	8	PVC	0.01	713	2	12	14	2		
Kirkland_Main-2390	Kirkland_Manholes-1326	321.42	Kirkland_Manholes-1339	314.87	128.9	5.08	10	PVC	0.01	2,880	96	290	386	13.4		
Kirkland_Main-2391	Kirkland_Manholes-1337	323.9	Kirkland_Manholes-1326	321.42	30.5	8.12	8	PVC	0.01	2,009	1	12	13	0.7		
Kirkland_Main-2392	Kirkland_Manholes-1327	326.71	Kirkland_Manholes-1337	323.9	27.1	10.37	8	PVC	0.01	2,271	1	8	9	0.4		
Kirkland_Main-2393	Kirkland_Manholes-1328	394.1	Kirkland_Manholes-1329	393.5	241.8	0.25	8	PVC	0.01	351	2	28	30	8.6		
Kirkland_Main-2394	Kirkland_Manholes-1329	393.5	Kirkland_Manholes-1330	392.47	187.9	0.55	8	PVC	0.01	522	4	32	35	6.8		
Kirkland_Main-2395	Kirkland_Manholes-1330	392.47	Kirkland_Manholes-1332	391.73	102.7	0.72	8	PVC	0.01	597	4	36	40	6.6		
Kirkland_Main-2396	Kirkland_Manholes-1332	391.73	Kirkland_Manholes-1333	390.44	145.6	0.89	8	Ductile Iron	0.012	553	20	44	64	11.5	SM14-Ex-EX177	Drop Connection
Kirkland_Main-2397	Kirkland_Manholes-1331	393.51	Kirkland_Manholes-1332	391.73	79.5	2.24	8	Ductile Iron	0.012	879	0	4	4	0.5	SM14-Ex-EX177	
Kirkland_Main-2398	Kirkland_Manholes-1333	387.1	Kirkland_Manholes-1334	373.64	147.7	9.12	8	PVC	0.01	2,129	21	48	68	3.2		
Kirkland_Main-2399	Kirkland_Manholes-1334	373.64	Kirkland_Manholes-1335	367.98	202.7	2.79	8	PVC	0.01	1,178	21	52	73	6.2		
Kirkland_Main-2400	Kirkland_Manholes-1336	341.09	Kirkland_Manholes-1327	326.71	166.6	8.63	8	PVC	0.01	2,071	1	4	5	0.2		
Kirkland_Main-2401	Kirkland_Manholes-1338	316.17	Kirkland_Manholes-1339	314.87	207.4	0.63	8	PVC	0.01	557	1	4	5	0.9		
Kirkland_Main-2402	Kirkland_Manholes-1339	314.87	Kirkland_Manholes-1342	287.41	238.7	11.5	10	PVC	0.01	4,335	98	298	396	9.1		Drop Connection
Kirkland_Main-2403	Kirkland_Manholes-1345	289.73	Kirkland_Manholes-1344	287.44	243.6	0.94	8	PVC	0.01	684	1	4	5	0.7		
Kirkland_Main-2404	Kirkland_Manholes-1344	287.44	Kirkland_Manholes-1343	283.8	35.3	10.32	8	PVC	0.01	2,265	2	8	10	0.4		
Kirkland_Main-2405	Kirkland_Manholes-1343	283.8	Kirkland_Manholes-1342	283.15	24.6	2.63	8	PVC	0.01	1,144	2	12	13	1.2		
Kirkland_Main-2406	Kirkland_Manholes-1340	293.32	Kirkland_Manholes-1342	293.12	51.1	0.4	8	PVC	0.01	446	7	56	62	14		Drop Connection
Kirkland_Main-2407	Kirkland_Manholes-1341	299.38	Kirkland_Manholes-1340	293.32	143.1	4.24	8	PVC	0.01	1,451	6	52	57	4		
Kirkland_Main-2408	Kirkland_Manholes-1346	416.9	Kirkland_Manholes-1351	414.82	383.4	0.54	8	Concrete	0.013	399	0	4	4	1	SM14-Ex-EX181	
Kirkland_Main-2409	Kirkland_Manholes-1351	414.82	Kirkland_Manholes-1350	414.2	207.6	0.3	10	Concrete	0.013	537	52	179	231	43	SM14-Ex-EX215	
Kirkland_Main-2410	Kirkland_Manholes-1350	414.2	Kirkland_Manholes-1917	413.2	125.7	0.8	10	Concrete	0.013	877	55	187	242	27.6	SM14-Ex-EX215	

Existing - Peak Hour Flow - Pipe Capacity Table

Label	Upstream Node	Upstream Invert Elevation (ft)	Downstream Node	Downstream Invert Elevation (ft)	Length (ft)	Slope (%)	Diameter (in)	Material	Manning's n	Design Capacity (gpm)	Domestic Flow (gpm)	I/I Flow (gpm)	Total Flow (gpm)	Percent Full (%)	CIP No.	Notes
Kirkland_Main-2411	Kirkland_Manholes-1373	425.99	Kirkland_Manholes-1350	414.2	373.4	3.16	8	Concrete	0.013	964	2	4	6	0.6	SM14-Ex-EX217	
Kirkland_Main-2412	Kirkland_Manholes-612	119.17	Kirkland_Manholes-613	104.8	247.7	5.8	6	Concrete	0.013	607	1	8	9	1.5	SM14-Ex-EX149	
Kirkland_Main-2413	Kirkland_Manholes-613	104.8	Kirkland_Manholes-614	87.89	231.1	7.32	6	Concrete	0.013	681	3	16	20	2.9	SM14-Ex-EX149	
Kirkland_Main-2414	Kirkland_Manholes-609	139.22	Kirkland_Manholes-1799	133.76	308.5	1.77	6	Concrete	0.013	335	2	8	10	3.1	SM14-Ex-EX146	
Kirkland_Main-2417	Kirkland_Manholes-611	126.2	Kirkland_Manholes-610	123.3	146.2	1.98	6	Concrete	0.013	355	1	8	9	2.5	SM14-Ex-EX148	
Kirkland_Main-2418	Kirkland_Manholes-610	123.3	Kirkland_Manholes-1801	112.29	320.9	3.43	6	Concrete	0.013	466	2	16	19	4.1	SM14-Ex-EX148	
Kirkland_Main-2420	Kirkland_Manholes-585	162.05	Kirkland_Manholes-1797	142.57	517.3	3.77	6	Concrete	0.013	489	1	8	10	2	SM14-Ex-EX144	
Kirkland_Main-2424	Kirkland_Manholes-582	179.11	Kirkland_Manholes-583	174.24	247.1	1.97	6	Concrete	0.013	354	2	8	10	2.8	SM14-Ex-EX91	
Kirkland_Main-2425	Kirkland_Manholes-583	174.24	Kirkland_Manholes-1796	160.8	295.1	4.55	6	Concrete	0.013	537	3	16	20	3.6	SM14-Ex-EX91	
Kirkland_Main-2426	Kirkland_Manholes-586	156.07	Kirkland_Manholes-587	133.23	320.6	7.12	6	Concrete	0.013	672	1	8	9	1.4	SM14-Ex-EX145	
Kirkland_Main-2427	Kirkland_Manholes-587	133.23	Kirkland_Manholes-588	128.35	150.1	3.25	6	Concrete	0.013	454	3	16	20	4.4	SM14-Ex-EX145	
Kirkland_Main-2428	Kirkland_Manholes-580	147.12	Kirkland_Manholes-588	128.35	316.6	5.93	8	Concrete	0.013	1,321	29	115	144	10.9	SM14-Ex-EX96	
Kirkland_Main-2430	Kirkland_Manholes-581	170.5	Kirkland_Manholes-580	147.12	349.2	6.7	6	Concrete	0.013	652	2	8	10	1.6	SM14-Ex-EX94	
Kirkland_Main-2431	Kirkland_Manholes-588	128.35	Kirkland_Manholes-606	111.69	288.6	5.77	8	Concrete	0.013	1,303	33	140	173	13.3	SM14-Ex-EX96	
Kirkland_Main-2432	Kirkland_Manholes-1506	266.15	Kirkland_Manholes-1507	265.94	137.9	0.15	8	PVC	0.01	275	27	111	138	50.2		
Kirkland_Main-2433	Kirkland_Manholes-605	109.94	Kirkland_Manholes-604	92.41	437.3	4.01	6	Concrete	0.013	504	7	8	15	2.9	SM14-Ex-EX160	
Kirkland_Main-2434	Kirkland_Manholes-590	118.3	Kirkland_Manholes-591	102.05	327.5	4.96	6	Concrete	0.013	561	5	16	21	3.8	SM14-Ex-EX158	
Kirkland_Main-2435	Kirkland_Manholes-591	102.05	Kirkland_Manholes-592	96.93	331.1	1.55	6	Concrete	0.013	313	8	25	33	10.5	SM14-Ex-EX158	
Kirkland_Main-2436	Kirkland_Manholes-592	96.93	Kirkland_Manholes-602	90.22	292.3	2.3	8	Concrete	0.013	822	71	370	442	53.8	SM5	
Kirkland_Main-2437	Kirkland_Manholes-597	99.4	Kirkland_Manholes-592	96.93	306.8	0.8	6	Concrete	0.013	226	7	41	49	21.5	SM14-Ex-EX158	
Kirkland_Main-2438	Kirkland_Manholes-1612	97.3	Kirkland_Manholes-599	92.8	301.8	1.49	6	Concrete	0.013	308	0	8	9	2.8	SM14-Ex-EX160	
Kirkland_Main-2440	Kirkland_Manholes-573	132.21	Kirkland_Manholes-572	113.73	388	4.76	6	Concrete	0.013	550	3	8	12	2.1	SM14-Ex-EX118	
Kirkland_Main-2441	Kirkland_Manholes-572	113.73	Kirkland_Manholes-596	110.91	307.7	0.92	8	Concrete	0.013	519	85	338	422	81.3	SM14-Ex-EX117	
Kirkland_Main-2442	Kirkland_Manholes-595	103.44	Kirkland_Manholes-597	99.4	155.7	2.6	8	Concrete	0.013	874	6	33	39	4.5	SM14-Ex-EX116	
Kirkland_Main-2443	Kirkland_Manholes-576	111.2	Kirkland_Manholes-593	103.61	155.5	4.88	8	Concrete	0.013	1,198	54	288	342	28.5	SM5	
Kirkland_Main-2444	Kirkland_Manholes-593	103.61	Kirkland_Manholes-592	96.93	157.1	4.25	8	Concrete	0.013	1,118	55	296	351	31.4	SM5	
Kirkland_Main-2445	Kirkland_Manholes-577	113.69	Kirkland_Manholes-576	111.2	334.4	0.74	6	Concrete	0.013	217	7	25	32	14.5	SM14-Ex-EX112	
Kirkland_Main-2446	Kirkland_Manholes-578	130.09	Kirkland_Manholes-577	113.69	328.9	4.99	6	Concrete	0.013	562	4	16	20	3.6	SM14-Ex-EX112	
Kirkland_Main-2447	Kirkland_Manholes-2065	431.1	Kirkland_Manholes-2295	415.45	308.4	5.07	8	PVC	0.01	1,588	1	4	5	0.3		
Kirkland_Main-2448	Kirkland_Manholes-579	148.3	Kirkland_Manholes-578	130.09	329.4	5.53	6	Concrete	0.013	592	2	8	10	1.7	SM14-Ex-EX112	
Kirkland_Main-2449	Kirkland_Manholes-584	159.38	Kirkland_Manholes-580	147.12	165.2	7.42	8	Concrete	0.013	1,478	26	99	125	8.4	SM14-Ex-EX96	
Kirkland_Main-2450	Kirkland_Manholes-615	97.62	Kirkland_Manholes-614	87.89	329.8	2.95	6	Concrete	0.013	433	1	8	9	2.1	SM14-Ex-EX149	
Kirkland_Main-2451	Kirkland_Manholes-604	92.41	Kirkland_Manholes-621	70.36	291.4	7.57	8	Concrete	0.013	1,492	10	21	31	2.1	SM14-Ex-EX161	
Kirkland_Main-2452	Kirkland_Manholes-626	276.72	Kirkland_Manholes-627	275.98	244.8	0.3	8	PVC	0.01	388	1	4	5	1.3		
Kirkland_Main-2453	Kirkland_Manholes-628	242.79	Kirkland_Manholes-629	242.12	61.5	1.09	8	PVC	0.01	736	29	139	168	22.8		
Kirkland_Main-2454	Kirkland_Manholes-629	242.12	Kirkland_Manholes-630	239.43	331.8	0.81	8	PVC	0.01	635	30	143	173	27.2		
Kirkland_Main-2455	Kirkland_Manholes-648	244.79	Kirkland_Manholes-628	242.79	365.8	0.55	8	PVC	0.01	521	28	135	163	31.2		
Kirkland_Main-2456	Kirkland_Manholes-631	237.5	Kirkland_Manholes-632	237.32	36.6	0.5	8	PVC	0.01	498	30	151	181	36.3		Updated Per As-Builts (Drop Connection)
Kirkland_Main-2457	Kirkland_Manholes-630	239.43	Kirkland_Manholes-631	237.5	158.9	1.21	8	PVC	0.01	777	30	147	177	22.7		
Kirkland_Main-2458	Kirkland_Manholes-633	234.78	Kirkland_Manholes-634	228.12	123.4	5.4	21	PVC	0.01	21,481	458	1,542	2,000	9.3		
Kirkland_Main-2459	Kirkland_Manholes-635	248.49	Kirkland_Manholes-634	228.12	181.8	11.21	8	PVC	0.01	2,360	1	4	5	0.2		
Kirkland_Main-2460	Kirkland_Manholes-634	228.12	Kirkland_Manholes-632	228	216.6	0.06	21	PVC	0.01	2,176	460	1,550	2,009	92.3	SM14-Ex-EX75	
Kirkland_Main-2461	Kirkland_Manholes-632	228	Kirkland_Manholes-636	227	153.6	0.65	21	PVC	0.01	7,460	490	1,705	2,194	29.4		
Kirkland_Main-2462	Kirkland_Manholes-636	227	Kirkland_Manholes-335	225.11	273.2	0.69	21	PVC	0.01	7,690	490	1,709	2,198	28.6		
Kirkland_Main-2466	Kirkland_Manholes-640	237.92	Kirkland_Manholes-639	237.89	31.5	0.1	18	PVC	0.01	1,891	244	1,049	1,293	68.4	SM14-2035-DF8	
Kirkland_Main-2467	Kirkland_Manholes-639	237.89	Kirkland_Manholes-638	236.51	242.7	0.57	21	PVC	0.01	6,971	451	1,530	1,981	28.4		
Kirkland_Main-2468	Kirkland_Manholes-647	246.6	Kirkland_Manholes-646	244.32	287.5	0.79	8	PVC	0.01	628	5	4	9	1.5		
Kirkland_Main-2469	Kirkland_Manholes-646	244.32	Kirkland_Manholes-645	243.42	85.6	1.05	8	PVC	0.01	723	6	8	14	1.9		
Kirkland_Main-2470	Kirkland_Manholes-644	249.23	Kirkland_Manholes-643	242.32	131.1	5.27	8	PVC	0.01	1,619	1	4	5	0.3		
Kirkland_Main-2471	Kirkland_Manholes-645	243.42	Kirkland_Manholes-643	242.32	253.7	0.43	18	PVC	0.01	4,035	239	1,029	1,268	31.4		
Kirkland_Main-2472	Kirkland_Manholes-643	242.32	Kirkland_Manholes-642	242.1	113.5	0.19	18	PVC	0.01	2,698	241	1,037	1,278	47.4		
Kirkland_Main-2473	Kirkland_Manholes-642	242.1	Kirkland_Manholes-641	241.26	301.1	0.28	18	PVC	0.01	3,237	243	1,041	1,284	39.7		
Kirkland_Main-2474	Kirkland_Manholes-641	241.26	Kirkland_Manholes-640	237.92	280	1.19	18	PVC	0.01	6,693	244	1,045	1,289	19.3		
Kirkland_Main-2475	Kirkland_Manholes-650	246.28	Kirkland_Manholes-649	244.91	253.4	0.54	8	PVC	0.01	518	22	103	125	24.2		
Kirkland_Main-2476	Kirkland_Manholes-661	245.17	Kirkland_Manholes-648	244.79	204.2	0.19	8	PVC	0.01	304	4	24	27	9		
Kirkland_Main-2477	Kirkland_Manholes-649	244.91	Kirkland_Manholes-648	244.79	14.5	0.83	8	PVC	0.01	641	24	107	131	20.4		
Kirkland_Main-2478	Kirkland_Manholes-681	256.89	Kirkland_Manholes-684	256.25	143.5	0.45	8	PVC	0.01	473	19	36	55	11.6		
Kirkland_Main-2479	Kirkland_Manholes-683	268.99	Kirkland_Manholes-682	258.64	128.7	8.04	8	PVC	0.01	1,999	0	4	4	0.2		
Kirkland_Main-2480	Kirkland_Manholes-689	265.38	Kirkland_Manholes-688	264.8	145.1	0.4	8	PVC	0.01	445	1	4	5	1		
Kirkland_Main-2481	Kirkland_Manholes-688	264.8	Kirkland_Manholes-687	264	200.3	0.4	8	PVC	0.01	446	2	8	10	2.2		
Kirkland_Main-2482	Kirkland_Manholes-695	344.34	Kirkland_Manholes-696	340.09	297.3	1.43	8	Concrete	0.013	648	4	8	12	1.9	SM14-Ex-EX74	
Kirkland_Main-2483	Kirkland_Manholes-829	344.99	Kirkland_Manholes-695	344.34	301.8	0.22	8	Concrete	0.013	252	2	4	5	2.2	SM14-Ex-EX74	

Existing - Peak Hour Flow - Pipe Capacity Table

Label	Upstream Node	Upstream Invert Elevation (ft)	Downstream Node	Downstream Invert Elevation (ft)	Length (ft)	Slope (%)	Diameter (in)	Material	Manning's n	Design Capacity (gpm)	Domestic Flow (gpm)	I/I Flow (gpm)	Total Flow (gpm)	Percent Full (%)	CIP No.	Notes
Kirkland_Main-2484	Kirkland_Manholes-694	328.94	Kirkland_Manholes-693	302.3	232.9	11.44	8	PVC	0.01	2,384	1	4	5	0.2		
Kirkland_Main-2485	Kirkland_Manholes-691	306.23	Kirkland_Manholes-693	302.3	272.1	1.44	8	PVC	0.01	847	3	8	11	1.3		
Kirkland_Main-2486	Kirkland_Manholes-692	325.47	Kirkland_Manholes-691	306.23	258.4	7.45	8	PVC	0.01	1,924	1	4	5	0.3		
Kirkland_Main-2487	Kirkland_Manholes-693	302.3	Kirkland_Manholes-807	300.8	136	1.1	8	PVC	0.01	741	6	16	22	2.9		
Kirkland_Main-2488	Kirkland_Manholes-690	274.25	Kirkland_Manholes-701	273.2	290.3	0.36	8	PVC	0.01	424	4	12	16	3.7		
Kirkland_Main-2489	Kirkland_Manholes-699	288.54	Kirkland_Manholes-701	273.2	288.8	5.31	8	PVC	0.01	1,625	3	8	11	0.7		
Kirkland_Main-2490	Kirkland_Manholes-698	313.56	Kirkland_Manholes-699	288.54	182.5	13.71	8	PVC	0.01	2,611	1	4	5	0.2		
Kirkland_Main-2492	Kirkland_Manholes-697	318.15	Kirkland_Manholes-700	302.48	274.3	5.71	8	PVC	0.01	1,685	1	4	5	0.3		
Kirkland_Main-2493	Kirkland_Manholes-700	302.48	Kirkland_Manholes-690	274.25	242.5	11.64	8	PVC	0.01	2,405	3	8	11	0.5		
Kirkland_Main-2494	Kirkland_Manholes-703	275.12	Kirkland_Manholes-704	272.37	210.2	1.31	8	PVC	0.01	806	2	4	6	0.7		
Kirkland_Main-2495	Kirkland_Manholes-702	273	Kirkland_Manholes-704	272.37	144.8	0.44	8	PVC	0.01	465	9	28	37	8		
Kirkland_Main-2496	Kirkland_Manholes-701	273.2	Kirkland_Manholes-702	273	143.3	0.14	8	PVC	0.01	263	8	24	32	12.1		
Kirkland_Main-2497	Kirkland_Manholes-723	131.03	O-42	125.22	186.8	3.11	8	PVC	0.01	1,244	55	118	173	13.9	SM14-2021-DF2	
Kirkland_Main-2498	Kirkland_Manholes-722	137.76	Kirkland_Manholes-723	131.03	91.1	7.39	8	PVC	0.01	1,917	54	112	167	8.7	SM14-2021-DF2	
Kirkland_Main-2499	Kirkland_Manholes-721	142.27	Kirkland_Manholes-722	137.76	93.1	4.84	8	PVC	0.01	1,551	52	107	159	10.2	SM14-2021-DF2	
Kirkland_Main-2500	Kirkland_Manholes-720	147.09	Kirkland_Manholes-721	142.27	318.3	1.51	8	PVC	0.01	868	52	101	153	17.7	SM14-2021-DF2	
Kirkland_Main-2501	Kirkland_Manholes-719	148.45	Kirkland_Manholes-720	147.09	142.4	0.95	8	PVC	0.01	689	52	95	148	21.4	SM14-2021-DF2	
Kirkland_Main-2502	Kirkland_Manholes-717	151.36	Kirkland_Manholes-718	150.12	225.4	0.55	8	PVC	0.01	523	50	73	123	23.4	SM14-2035-DF5	
Kirkland_Main-2503	Kirkland_Manholes-716	152.58	Kirkland_Manholes-717	151.36	272.7	0.45	8	PVC	0.01	472	50	67	117	24.8	SM14-2035-DF5	
Kirkland_Main-2504	Kirkland_Manholes-725	154.45	Kirkland_Manholes-716	152.58	174.3	1.07	8	PVC	0.01	730	42	45	87	11.9		
Kirkland_Main-2505	Kirkland_Manholes-726	155.56	Kirkland_Manholes-725	154.45	157.9	0.7	8	PVC	0.01	591	42	39	81	13.8		
Kirkland_Main-2506	Kirkland_Manholes-713	156.49	Kirkland_Manholes-726	155.56	219	0.43	8	PVC	0.01	460	27	34	61	13.2		
Kirkland_Main-2507	Kirkland_Manholes-712	157.06	Kirkland_Manholes-713	156.49	30.1	1.89	8	PVC	0.01	971	27	28	55	5.7		
Kirkland_Main-2508	Kirkland_Manholes-714	170.75	Kirkland_Manholes-712	157.06	209.3	6.54	8	PVC	0.01	1,803	0	11	11	0.6		
Kirkland_Main-2509	Kirkland_Manholes-715	181.7	Kirkland_Manholes-714	170.75	155	7.07	8	PVC	0.01	1,874	0	6	6	0.3		
Kirkland_Main-2510	Kirkland_Manholes-1398	27.8	Kirkland_Manholes-1397	27.53	119.5	0.23	24	PVC	0.01	6,274	138	1,013	2,736	43.6	SM14-Ex-EX154	
Kirkland_Main-2511	Kirkland_Manholes-1397	27.53	Kirkland_Manholes-1396	27.46	145.3	0.05	24	PVC	0.01	2,835	138	1,021	2,744	96.8	SM14-Ex-EX154	
Kirkland_Main-2512	Kirkland_Manholes-1399	44.47	Kirkland_Manholes-1398	27.8	324.1	5.14	8		0.012	1,333	135	1,004	1,422	106.7	SM14-Ex-EX143	
Kirkland_Main-2513	Kirkland_Manholes-1400	61.37	Kirkland_Manholes-1399	44.47	267.9	6.31	8		0.012	1,476	133	996	1,412	95.7	SM14-Ex-EX143	
Kirkland_Main-2514	Kirkland_Manholes-1401	76.78	Kirkland_Manholes-1400	61.37	289.6	5.32	8		0.012	1,355	30	280	310	22.9		
Kirkland_Main-2515	Kirkland_Manholes-1402	82.36	Kirkland_Manholes-1401	76.78	122	4.57	8		0.012	1,257	29	263	292	23.3		
Kirkland_Main-2516	Kirkland_Manholes-711	219.85	Kirkland_Manholes-710	219.11	65.7	1.13	8	PVC	0.01	748	9	8	17	2.3		
Kirkland_Main-2517	Kirkland_Manholes-710	219.11	Kirkland_Manholes-709	218.2	118.5	0.77	8	PVC	0.01	618	9	12	21	3.4		
Kirkland_Main-2518	Kirkland_Manholes-709	218.2	Kirkland_Manholes-707	216.1	262.1	0.8	8	PVC	0.01	631	9	16	25	3.9		
Kirkland_Main-2519	Kirkland_Manholes-708	217.66	Kirkland_Manholes-707	216.1	74	2.11	8	PVC	0.01	1,024	0	4	4	0.4		
Kirkland_Main-2520	Kirkland_Manholes-707	216.1	Kirkland_Manholes-706	215.57	102.1	0.52	8	PVC	0.01	508	9	24	33	6.4		
Kirkland_Main-2521	Kirkland_Manholes-706	215.57	Kirkland_Manholes-369	208.86	103.2	6.5	8	PVC	0.01	1,798	9	28	37	2		
Kirkland_Main-2522	Kirkland_Manholes-1403	89.74	Kirkland_Manholes-1402	82.36	156.6	4.71	8		0.012	1,276	22	239	261	20.5		
Kirkland_Main-2523	Kirkland_Manholes-1805	101.51	Kirkland_Manholes-1403	89.74	269.7	4.36	8		0.012	1,227	21	222	243	19.8		
Kirkland_Main-2524	Kirkland_Manholes-1404	117.83	Kirkland_Manholes-1805	101.51	279.3	5.84	8		0.012	1,420	5	91	95	6.7		
Kirkland_Main-2525	Kirkland_Manholes-1405	132.7	Kirkland_Manholes-1404	117.83	317.4	4.68	8		0.012	1,272	5	82	87	6.8		
Kirkland_Main-2526	Kirkland_Manholes-1396	27.46	Kirkland_Manholes-1395	27.24	179.5	0.12	24	PVC	0.01	4,652	225	1,348	3,158	67.9	SM14-Ex-EX154	
Kirkland_Main-2527	Kirkland_Manholes-1395	27.24	Kirkland_Manholes-739	26.87	399	0.09	24	PVC	0.01	4,019	226	1,356	3,168	78.8	SM14-Ex-EX154	
Kirkland_Main-2528	Kirkland_Manholes-739	26.87	Kirkland_Manholes-738	25.89	300.8	0.33	24	PVC	0.01	7,534	226	1,365	3,176	42.2		
Kirkland_Main-2532	Kirkland_Manholes-738	25.89	MH 05-714	25.01	257	0.34	24	PVC	0.01	7,724	246	1,414	3,245	42		Updated per as-built drawings
Kirkland_Main-2533	Kirkland_Manholes-736	28.45	Kirkland_Manholes-735	25.17	30.7	10.68	8	PVC	0.01	2,304	60	280	340	14.8		
Kirkland_Main-2534	Kirkland_Manholes-735	25.17	MH 05-714	25.01	98.1	0.16	24	PVC	0.01	5,330	550	2,050	2,600	48.8		Updated per as-built drawings
Kirkland_Main-2535	Kirkland_Manholes-1705	33.28	Kirkland_Manholes-757	27.8	142.4	3.85	8	PVC	0.01	1,383	15	33	48	3.5		
Kirkland_Main-2536	Kirkland_Manholes-757	27.8	Kirkland_Manholes-738	25.89	24.1	7.91	8	PVC	0.01	1,983	20	41	61	3.1		
Kirkland_Main-2537	Kirkland_Manholes-734	25.7	Kirkland_Manholes-735	25.17	249.9	0.21	24	PVC	0.01	6,079	490	1,762	2,252	37		
Kirkland_Main-2538	Kirkland_Manholes-732	47.45	Kirkland_Manholes-733	35.72	350.8	3.34	18	PVC	0.01	11,207	375	1,527	1,902	17		
Kirkland_Main-2539	Kirkland_Manholes-731	53.54	Kirkland_Manholes-732	47.45	265.7	2.29	18	PVC	0.01	9,278	375	1,519	1,894	20.4		
Kirkland_Main-2540	Kirkland_Manholes-729	64.46	Kirkland_Manholes-730	57.26	336.6	2.14	12	PVC	0.01	3,040	118	494	612	20.1		
Kirkland_Main-2541	Kirkland_Manholes-730	57.26	Kirkland_Manholes-731	53.54	101.9	3.65	18	PVC	0.01	11,709	287	1,054	1,341	11.4		
Kirkland_Main-2542	Kirkland_Manholes-1436	518.03	Kirkland_Manholes-1430	516.64	170	0.82	8	PVC	0.01	638	2	8	10	1.5		
Kirkland_Main-2543	Kirkland_Manholes-1434	511.6	Kirkland_Manholes-1431	510.8	175	0.46	8	PVC	0.01	477	8	32	40	8.4		
Kirkland_Main-2544	Kirkland_Manholes-1431	510.8	Kirkland_Manholes-1432	510.04	163.2	0.47	8	PVC	0.01	481	8	36	44	9.1		
Kirkland_Main-2545	Kirkland_Manholes-1432	510.04	Kirkland_Manholes-1433	509.55	97.9	0.5	8	PVC	0.01	499	9	40	49	9.8		
Kirkland_Main-2546	Kirkland_Manholes-1433	509.55	Kirkland_Manholes-1437	508.69	186	0.46	8	PVC	0.01	480	10	44	54	11.2		
Kirkland_Main-2547	Kirkland_Manholes-1435	519.8	Kirkland_Manholes-1436	518.03	159.8	1.11	8	PVC	0.01	742	2	4	6	0.8		
Kirkland_Main-2548	Kirkland_Manholes-1437	508.69	Kirkland_Manholes-1438	507.49	258.4	0.46	8	PVC	0.01	480	11	48	58	12.2		
Kirkland_Main-2549	Kirkland_Manholes-1438	507.49	Kirkland_Manholes-1444	505.53	236.5	0.83	8	Concrete	0.013	494	15	72	87	17.6	SM14-Ex-EX269	

Existing - Peak Hour Flow - Pipe Capacity Table

Label	Upstream Node	Upstream Invert Elevation (ft)	Downstream Node	Downstream Invert Elevation (ft)	Length (ft)	Slope (%)	Diameter (in)	Material	Manning's n	Design Capacity (gpm)	Domestic Flow (gpm)	I/I Flow (gpm)	Total Flow (gpm)	Percent Full (%)	CIP No.	Notes
Kirkland_Main-2550	Kirkland_Manholes-1439	508.99	Kirkland_Manholes-1438	507.49	261.3	0.57	8	PVC	0.01	534	5	20	25	4.6	SM14-Ex-EX269	
Kirkland_Main-2551	Kirkland_Manholes-1441	509.69	Kirkland_Manholes-1440	509.16	212.6	0.25	8	Concrete	0.013	271	4	12	16	6.1	SM14-Ex-EX269	
Kirkland_Main-2552	Kirkland_Manholes-1440	509.16	Kirkland_Manholes-1439	508.99	378	0.04	8	Concrete	0.013	115	4	16	20	17.7	SM14-Ex-EX269	
Kirkland_Main-2554	Kirkland_Manholes-1449	498.19	Kirkland_Manholes-1450	496.32	291.2	0.64	8	Concrete	0.013	435	22	127	149	34.3	SM14-Ex-EX269	
Kirkland_Main-2555	Kirkland_Manholes-1450	496.32	Kirkland_Manholes-1451	492.05	400.8	1.07	8	Concrete	0.013	560	25	131	156	27.8	SM14-Ex-EX269	
Kirkland_Main-2556	Kirkland_Manholes-1448	502.55	Kirkland_Manholes-1449	498.19	186.7	2.34	8	Concrete	0.013	829	21	123	144	17.4	SM14-Ex-EX269	
Kirkland_Main-2557	Kirkland_Manholes-1447	503.26	Kirkland_Manholes-1448	502.55	401.7	0.18	8	Concrete	0.013	228	19	119	138	60.7	SM14-Ex-EX269	
Kirkland_Main-2558	Kirkland_Manholes-2976	503.85	Kirkland_Manholes-1447	503.26	210.4	0.28	8	Concrete	0.013	287	18	115	134	46.5	SM14-Ex-EX269	
Kirkland_Main-2559	Kirkland_Manholes-1444	505.53	Kirkland_Manholes-1446	505.51	95.2	0.02	8	Concrete	0.013	79	16	83	99	126.1	SM14-Ex-EX269	
Kirkland_Main-2560	Kirkland_Manholes-1446	505.51	Kirkland_Manholes-1445	504.92	12.7	4.66	8	Concrete	0.013	1,171	16	87	103	8.8	SM14-Ex-EX269	
Kirkland_Main-2561	Kirkland_Manholes-1442	510.02	Kirkland_Manholes-1443	506.8	138.1	2.33	8	Concrete	0.013	828	0	4	4	0.5	SM14-Ex-EX274	
Kirkland_Main-2562	Kirkland_Manholes-1443	506.8	Kirkland_Manholes-1444	505.53	203.3	0.62	8	Concrete	0.013	429	0	8	8	1.9	SM14-Ex-EX274	
Kirkland_Main-2563	Kirkland_Manholes-1451	492.05	Kirkland_Manholes-1452	486.6	321.3	1.7	8	Concrete	0.013	706	27	135	162	22.9	SM14-Ex-EX269	
Kirkland_Main-2564	Kirkland_Manholes-1452	486.6	Kirkland_Manholes-1459	479.42	322.1	2.23	8	Concrete	0.013	810	28	139	167	20.7	SM14-Ex-EX269	
Kirkland_Main-2565	Kirkland_Manholes-1453	500.71	Kirkland_Manholes-1454	499.21	284.8	0.53	8	Concrete	0.013	394	1	4	5	1.3	SM14-Ex-EX270	
Kirkland_Main-2566	Kirkland_Manholes-1454	499.21	Kirkland_Manholes-1455	496	348.8	0.92	8	Concrete	0.013	520	3	8	11	2.1	SM14-Ex-EX270	
Kirkland_Main-2567	Kirkland_Manholes-1455	496	Kirkland_Manholes-1456	494.83	99.7	1.17	8	Concrete	0.013	587	5	12	17	2.8	SM14-Ex-EX270	
Kirkland_Main-2568	Kirkland_Manholes-1456	494.83	Kirkland_Manholes-1457	481.56	320	4.15	8	Concrete	0.013	1,104	6	16	22	2	SM14-Ex-EX270	
Kirkland_Main-2569	Kirkland_Manholes-1461	483.24	Kirkland_Manholes-1457	482.02	293.4	0.42	8	Concrete	0.013	350	17	48	64	18.4	SM14-Ex-EX214	Drop Connection
Kirkland_Main-2570	Kirkland_Manholes-1457	481.56	Kirkland_Manholes-1458	481.15	103.4	0.4	8	Concrete	0.013	342	23	68	91	26.6	SM14-Ex-EX214	
Kirkland_Main-2571	Kirkland_Manholes-1458	481.15	Kirkland_Manholes-1459	479.42	259.2	0.67	8	Concrete	0.013	443	23	72	95	21.4	SM14-Ex-EX214	
Kirkland_Main-2572	Kirkland_Manholes-1459	479.42	Kirkland_Manholes-1480	465.84	411.8	3.3	8	Concrete	0.013	985	51	215	266	27	SM14-Ex-EX214	
Kirkland_Main-2573	Kirkland_Manholes-1460	490.4	Kirkland_Manholes-1461	483.24	392	1.83	8	Concrete	0.013	733	2	4	6	0.9	SM14-Ex-EX214	
Kirkland_Main-2574	Kirkland_Manholes-1469	490.09	Kirkland_Manholes-1461	483.24	144.8	4.73	8	Concrete	0.013	1,180	14	36	50	4.2	SM14-Ex-EX271	
Kirkland_Main-2575	Kirkland_Manholes-608	134.68	Kirkland_Manholes-607	127.97	148.5	4.52	6	Concrete	0.013	535	1	8	9	1.7	SM14-Ex-EX147	
Kirkland_Main-2576	Kirkland_Manholes-607	127.97	Kirkland_Manholes-606	111.69	332.5	4.9	6	Concrete	0.013	557	4	16	20	3.6	SM14-Ex-EX147	
Kirkland_Main-2578	Kirkland_Manholes-3035	266.43	Kirkland_Manholes-1506	266.15	125.7	0.22	8	PVC	0.01	333	27	107	134	40.3		
Kirkland_Main-2579	Kirkland_Manholes-1504	267.51	Kirkland_Manholes-1505	267	104.1	0.49	8	PVC	0.01	493	22	83	105	21.3		
Kirkland_Main-2580	Kirkland_Manholes-1503	273.94	Kirkland_Manholes-1504	267.51	44	14.62	8	PVC	0.01	2,696	1	8	9	0.3		
Kirkland_Main-2581	Kirkland_Manholes-1502	279.47	Kirkland_Manholes-1503	273.94	90.7	6.09	8	PVC	0.01	1,741	0	4	4	0.3		
Kirkland_Main-2582	Kirkland_Manholes-1501	267.93	Kirkland_Manholes-1504	267.51	165.4	0.25	8	PVC	0.01	355	20	72	92	25.8		
Kirkland_Main-2583	Kirkland_Manholes-2255	245.88	Kirkland_Manholes-2253	239.74	232.2	2.64	8	Concrete	0.013	882	29	4	33	3.8	SM14-Ex-EX247	
Kirkland_Main-2584	Kirkland_Manholes-1499	268.92	Kirkland_Manholes-1501	267.93	240	0.41	8	PVC	0.01	453	19	68	87	19.1		
Kirkland_Main-2585	Kirkland_Manholes-1500	287.29	Kirkland_Manholes-1498	284.32	146.8	2.02	8	PVC	0.01	1,003	0	4	4	0.4		
Kirkland_Main-2587	Kirkland_Manholes-1498	284.32	Kirkland_Manholes-1499	268.92	127.3	12.1	8	PVC	0.01	2,452	2	8	9	0.4		
Kirkland_Main-2588	Kirkland_Manholes-771	213.99	Kirkland_Manholes-777	184.25	152.4	19.51	8	PVC	0.01	3,115	2	8	10	0.3		
Kirkland_Main-2589	Kirkland_Manholes-777	184.25	KC_Manholes-6	163.9	254	8.01	8	PVC	0.01	1,995	5	12	17	0.8		
Kirkland_Main-2590	KC_Manholes-5	169.15	KC_Manholes-6	163.9	285.7	1.84	8	PVC	0.01	956	9	44	53	5.5		
Kirkland_Main-2591	KC_Manholes-6	163.9	O-17	159.86	90.8	4.45	8	PVC	0.01	1,487	15	60	74	5		
Kirkland_Main-2592	Kirkland_Manholes-766	182.72	Kirkland_Manholes-1555	164.48	325.6	5.6	8	PVC	0.01	1,669	2	8	10	0.6		
Kirkland_Main-2593	Kirkland_Manholes-1555	164.48	O-18	159.86	33.3	13.89	8	PVC	0.01	2,628	4	12	15	0.6		
Kirkland_Main-2594	Kirkland_Manholes-767	210.01	Kirkland_Manholes-766	182.72	125.5	21.75	8	PVC	0.01	3,288	1	4	4	0.1		
Kirkland_Main-2595	Kirkland_Manholes-765	257.59	Kirkland_Manholes-764	244.77	266.3	4.81	8	Concrete	0.013	1,190	20	72	91	7.7	SM14-Ex-EX121	
Kirkland_Main-2596	Kirkland_Manholes-764	244.77	Kirkland_Manholes-1530	229.92	292.5	5.08	8	Concrete	0.013	1,222	21	75	97	7.9	SM14-Ex-EX121	
Kirkland_Main-2597	Kirkland_Manholes-770	166.93	Kirkland_Manholes-769	165.1	146.5	1.25	8	PVC	0.01	788	1	8	9	1.1		
Kirkland_Main-2598	Kirkland_Manholes-769	165.1	Kirkland_Manholes-768	159.83	42.8	12.31	8	PVC	0.01	2,474	3	16	19	0.8		
Kirkland_Main-2599	Kirkland_Manholes-768	159.83	O-19	156.57	65.3	5	8	PVC	0.01	1,577	3	20	23	1.5		
Kirkland_Main-2600	Kirkland_Manholes-1600	216.22	Kirkland_Manholes-1599	200.11	155.5	10.36	8	Concrete	0.013	1,746	2	4	6	0.3	SM14-Ex-EX170	
Kirkland_Main-2601	Kirkland_Manholes-1614	91.09	Kirkland_Manholes-1613	87.49	157.9	2.28	8	Concrete	0.013	819	12	115	127	15.5	SM14-Ex-EX167	
Kirkland_Main-2602	Kirkland_Manholes-1616	135.79	Kirkland_Manholes-1615	109.23	291.4	9.11	8	PVC	0.01	2,128	2	8	11	0.5		
Kirkland_Main-2603	Kirkland_Manholes-1617	246.15	Kirkland_Manholes-1630	217.96	377.4	7.47	8	PVC	0.01	1,927	1	4	5	0.3		
Kirkland_Main-2604	Kirkland_Manholes-1618	259.44	Kirkland_Manholes-1619	255.5	286.6	1.37	6	Concrete	0.013	295	1	4	5	1.7	SM14-Ex-EX176	
Kirkland_Main-2605	Kirkland_Manholes-1619	255.5	Kirkland_Manholes-1622	253.11	371.5	0.64	6	Concrete	0.013	202	3	8	11	5.6	SM14-Ex-EX176	
Kirkland_Main-2607	Kirkland_Manholes-1620	234.07	Kirkland_Manholes-1621	227.94	53.2	11.53	8	PVC	0.01	2,394	2	4	6	0.3		
Kirkland_Main-2608	Kirkland_Manholes-1621	227.94	Kirkland_Manholes-1631	193.59	278.6	12.33	8	PVC	0.01	2,476	3	8	11	0.4		
Kirkland_Main-2609	Kirkland_Manholes-1623	294.92	Kirkland_Manholes-1622	253.11	447.9	9.33	8	Concrete	0.013	1,657	200	807	1,006	60.7	SM7	
Kirkland_Main-2610	Kirkland_Manholes-1633	254.8	Kirkland_Manholes-1622	253.11	303.2	0.56	8	Concrete	0.013	405	8	16	24	5.9	SM14-Ex-EX204	
Kirkland_Main-2611	Kirkland_Manholes-1626	191.61	Kirkland_Manholes-1624	183.67	177.3	4.48	8	PVC	0.01	1,492	7	24	31	2.1		
Kirkland_Main-2615	Kirkland_Manholes-1829	64.39	Kirkland_Manholes-1830	64.02	316.5	0.12	15	PVC	0.01	1,289	102	700	1,084	84.1	SM14-Ex-EX142	
Kirkland_Main-2616	Kirkland_Manholes-1830	64.02	Kirkland_Manholes-1400	61.37	81.5	3.25	15	PVC	0.01	6,795	102	708	1,092	16.1	SM14-Ex-EX142	
Kirkland_Main-2617	Kirkland_Manholes-1828	65.79	Kirkland_Manholes-1829	64.39	312.6	0.45	15	PVC	0.01	2,522	101	692	1,075	42.6	SM14-2035-DF11	
Kirkland_Main-2618	Kirkland_Manholes-1827	69.3	Kirkland_Manholes-2994	67.86	357.5	0.4	15	PVC	0.01	2,392	98	659	1,039	43.4		

Existing - Peak Hour Flow - Pipe Capacity Table

Label	Upstream Node	Upstream Invert Elevation (ft)	Downstream Node	Downstream Invert Elevation (ft)	Length (ft)	Slope (%)	Diameter (in)	Material	Manning's n	Design Capacity (gpm)	Domestic Flow (gpm)	I/I Flow (gpm)	Total Flow (gpm)	Percent Full (%)	CIP No.	Notes
Kirkland_Main-2619	Kirkland_Manholes-1826	70.81	Kirkland_Manholes-1827	69.3	214.2	0.71	15	PVC	0.01	3,165	96	650	1,029	32.5		
Kirkland_Main-2620	Kirkland_Manholes-1824	72.16	Kirkland_Manholes-1826	70.81	200.6	0.67	15	PVC	0.01	3,092	96	642	1,020	33		
Kirkland_Main-2621	Kirkland_Manholes-1823	74.67	Kirkland_Manholes-1824	72.16	26.9	9.32	8	PVC	0.01	2,153	7	33	40	1.9	SM10	
Kirkland_Main-2622	Kirkland_Manholes-1822	87.17	Kirkland_Manholes-1823	74.67	362.6	3.45	6	Concrete	0.013	468	5	25	30	6.4	SM10	
Kirkland_Main-2623	Kirkland_Manholes-1821	94.43	Kirkland_Manholes-1822	87.17	350	2.07	6	Concrete	0.013	363	4	16	20	5.6	SM10	
Kirkland_Main-2624	Kirkland_Manholes-1820	95.81	Kirkland_Manholes-1821	94.43	359.9	0.38	6	Concrete	0.013	156	2	8	10	6.4	SM10	
Kirkland_Main-2625	Kirkland_Manholes-1819	89.53	Kirkland_Manholes-1402	82.36	241.2	2.97	6	Concrete	0.013	434	6	16	23	5.3	SM10	
Kirkland_Main-2626	Kirkland_Manholes-1818	98.86	Kirkland_Manholes-1819	89.53	204	4.57	6	Concrete	0.013	539	5	8	13	2.5	SM10	
Kirkland_Main-2628	Kirkland_Manholes-1811	129.72	Kirkland_Manholes-1812	126.33	178.5	1.9	6	Concrete	0.013	347	12	82	94	27.2	SM10	
Kirkland_Main-2629	Kirkland_Manholes-1812	126.33	Kirkland_Manholes-1813	123.92	54.8	4.4	6	Concrete	0.013	528	12	91	103	19.4	SM14-Ex-EX139	
Kirkland_Main-2630	Kirkland_Manholes-1813	123.92	Kirkland_Manholes-1814	117.44	111.3	5.82	6	Concrete	0.013	608	13	99	112	18.4	SM14-Ex-EX139	
Kirkland_Main-2631	Kirkland_Manholes-1814	117.44	Kirkland_Manholes-1817	109.22	155.5	5.28	6	Concrete	0.013	579	15	115	130	22.5	SM10	
Kirkland_Main-2632	Kirkland_Manholes-1815	130.16	Kirkland_Manholes-1814	117.44	475.8	2.67	6	PVC	0.01	535	2	8	10	1.8	SM10	
Kirkland_Main-2633	Kirkland_Manholes-1816	115.31	Kirkland_Manholes-1825	112.27	360.1	0.84	6	Concrete	0.013	231	3	8	11	4.8	SM10	
Kirkland_Main-2634	Kirkland_Manholes-1817	109.22	Kirkland_Manholes-1805	101.51	328.6	2.35	8	Concrete	0.013	831	15	123	139	16.7	SM10	
Kirkland_Main-2635	Kirkland_Manholes-1831	166.9	Kirkland_Manholes-1190	151.12	137.2	11.5	6	PVC	0.01	1,110	1	8	9	0.8	SM14-Ex-EX83	
Kirkland_Main-2636	Kirkland_Manholes-1837	12.2	Kirkland_Manholes-1836	11	9.3	12.92	12	PVC	0.01	7,473	372	786	1,157	15.5		
Kirkland_Main-2637	Kirkland_Manholes-1834	11.35	Kirkland_Manholes-1835	11.1	27.9	0.9	12	PVC	0.01	1,967	16	91	106	5.4		
Kirkland_Main-2638	Kirkland_Manholes-1835	11.1	Kirkland_Manholes-1836	11	9.8	1.02	12	PVC	0.01	2,099	16	97	113	5.4		
Kirkland_Main-2639	Kirkland_Manholes-1832	17.68	Kirkland_Manholes-1833	16.5	43.9	2.69	8	PVC	0.01	1,155	2	6	9	0.7		
Kirkland_Main-2640	Kirkland_Manholes-1794	12.63	Kirkland_Manholes-1837	12.2	128.1	0.34	15	PVC	0.01	2,183	372	779	1,151	52.7		
Kirkland_Main-2641	Kirkland_Manholes-2679	83.65	Kirkland_Manholes-2880	81.72	80.2	2.41	8	PVC	0.01	1,094	0	6	6	0.6		
Kirkland_Main-2642	Kirkland_Manholes-2880	81.72	Kirkland_Manholes-2879	68.04	76.6	17.86	8	PVC	0.01	2,979	24	30	55	1.8		
Kirkland_Main-2644	Kirkland_Manholes-2885	165.69	Kirkland_Manholes-1111	165.6	145.4	0.06	8	Concrete	0.013	135	0	4	4	2.9	SM14-Ex-EX9	
Kirkland_Main-2658	Kirkland_Manholes-480	484.34	Kirkland_Manholes-1493	479.91	224.4	1.97	8	PVC	0.01	991	3	4	7	0.7		
Kirkland_Main-2659	Kirkland_Manholes-3042	194.23	Kirkland_Manholes-2474	188.45	173.4	3.33	8	PVC	0.01	1,287	1	4	5	0.4		
Kirkland_Main-2663	Kirkland_Manholes-2886	151	Kirkland_Manholes-252	142.57	290.9	2.9	8	Concrete	0.013	923	0	4	4	0.5	SM14-Ex-EX40	
Kirkland_Main-2666	Kirkland_Manholes-2887	302.33	Kirkland_Manholes-2888	290.53	197	5.99	8	PVC	0.01	1,725	3	16	19	1.1		
Kirkland_Main-2667	Kirkland_Manholes-1181	120.04	Kirkland_Manholes-2889	83.33	400.3	9.17	8	Concrete	0.013	1,642	3	9	12	0.7	SM10	
Kirkland_Main-2668	Kirkland_Manholes-2889	83.33	Kirkland_Manholes-305	74.69	164.1	5.26	8	Concrete	0.013	1,244	5	18	23	1.9	SM10	
Kirkland_Main-2670	Kirkland_Manholes-1624	183.67	Kirkland_Manholes-1625	179.1	84.9	5.38	8	PVC	0.01	1,636	7	28	35	2.1		
Kirkland_Main-2671	Kirkland_Manholes-1632	181.73	Kirkland_Manholes-1625	179.1	96.8	2.72	8	PVC	0.01	1,162	3	16	19	1.6		
Kirkland_Main-2672	Kirkland_Manholes-1627	199.21	Kirkland_Manholes-1626	191.61	142.7	5.33	8	PVC	0.01	1,627	7	20	27	1.7		
Kirkland_Main-2673	Kirkland_Manholes-1628	203.71	Kirkland_Manholes-1627	199.21	47.7	9.43	8	PVC	0.01	2,165	7	16	22	1		
Kirkland_Main-2674	Kirkland_Manholes-1629	216.45	Kirkland_Manholes-1628	203.71	87.7	14.52	8	PVC	0.01	2,687	7	12	18	0.7		
Kirkland_Main-2675	Kirkland_Manholes-1630	217.96	Kirkland_Manholes-1629	216.45	15.3	9.86	8	PVC	0.01	2,214	1	8	9	0.4		
Kirkland_Main-2676	Kirkland_Manholes-1631	193.59	Kirkland_Manholes-1632	181.73	96.1	12.34	8	PVC	0.01	2,477	3	12	15	0.6		
Kirkland_Main-2677	Kirkland_Manholes-1712	141.37	Kirkland_Manholes-1706	124.78	325.1	5.1	6	Concrete	0.013	569	1	8	10	1.7	SM14-Ex-EX166	
Kirkland_Main-2678	Kirkland_Manholes-1716	100.64	Kirkland_Manholes-1715	96.61	119	3.39	8	PVC	0.01	1,298	15	8	23	1.8		
Kirkland_Main-2679	Kirkland_Manholes-1715	96.61	Kirkland_Manholes-1714	94.78	31.8	5.76	8	PVC	0.01	1,692	15	16	31	1.9		
Kirkland_Main-2680	Kirkland_Manholes-1713	108.19	Kirkland_Manholes-1714	94.78	126.8	10.57	6	Concrete	0.013	819	9	8	17	2	SM14-Ex-EX186	
Kirkland_Main-2681	Kirkland_Manholes-1714	94.78	Kirkland_Manholes-1717	58.55	387.3	9.35	6	Concrete	0.013	770	24	33	56	7.3	SM14-Ex-EX186	
Kirkland_Main-2685	Kirkland_Manholes-1720	51.16	Kirkland_Manholes-1722	47.26	30.1	12.97	8	PVC	0.01	2,539	39	25	63	2.5		
Kirkland_Main-2686	Kirkland_Manholes-1721	54.75	Kirkland_Manholes-1720	51.16	58.7	6.12	6	PVC	0.01	810	39	16	55	6.8	SM14-Ex-EX185	
Kirkland_Main-2687	Kirkland_Manholes-1723	62.26	Kirkland_Manholes-1721	54.75	207.5	3.62	6	PVC	0.01	623	36	8	45	7.2	SM14-Ex-EX185	
Kirkland_Main-2688	Kirkland_Manholes-1711	136.47	Kirkland_Manholes-1710	134.24	160.1	1.39	10	Concrete	0.013	1,161	11	74	85	7.3	SM14-Ex-EX196	
Kirkland_Main-2689	Kirkland_Manholes-1734	24.57	Kirkland_Manholes-1737	24.2	117	0.32	12	PVC	0.01	1,169	92	132	224	19.1		
Kirkland_Main-2690	Kirkland_Manholes-1735	26.22	Kirkland_Manholes-1734	24.57	115.4	1.43	12	PVC	0.01	2,488	5	25	30	1.2		
Kirkland_Main-2691	Kirkland_Manholes-1729	25.06	Kirkland_Manholes-1734	24.57	158.2	0.31	12	PVC	0.01	1,157	87	99	185	16		
Kirkland_Main-2692	Kirkland_Manholes-1730	26.2	Kirkland_Manholes-1729	25.06	35.3	3.23	8	PVC	0.01	1,268	17	33	50	4		
Kirkland_Main-2693	Kirkland_Manholes-1731	27.35	Kirkland_Manholes-1730	26.2	207.2	0.55	8	PVC	0.01	525	13	25	38	7.3		
Kirkland_Main-2694	Kirkland_Manholes-1732	28.2	Kirkland_Manholes-1731	27.35	54.4	1.56	6	PVC	0.01	409	6	16	23	5.5	SM14-Ex-EX156	
Kirkland_Main-2695	Kirkland_Manholes-1733	28.74	Kirkland_Manholes-1732	28.2	66.1	0.82	6	PVC	0.01	296	6	8	14	4.9	SM14-Ex-EX156	
Kirkland_Main-2696	Kirkland_Manholes-1743	28.04	Kirkland_Manholes-1746	27.54	238.6	0.21	10	PVC	0.01	585	247	568	816	139.3	SM14-Ex-EX157	
Kirkland_Main-2697	Kirkland_Manholes-1746	27.54	MH_Selection_06-13-2016-4	25.37	27.6	7.87	10	PVC	0.01	3,585	249	617	866	24.2	SM14-Ex-EX157	Updated per as-built drawings
Kirkland_Main-2700	Kirkland_Manholes-1745	27.57	Kirkland_Manholes-1746	27.54	73.9	0.04	8	PVC	0.01	142	1	41	43	29.9		
Kirkland_Main-2702	Kirkland_Manholes-1737	24.2	MH_Selection_06-13-2016-5	24.55	145.6	-0.24	12	PVC	0.01	1,019	101	140	241	23.7		Updated per as-built drawings
Kirkland_Main-2703	Kirkland_Manholes-1736	26.69	Kirkland_Manholes-1735	26.22	88.6	0.53	8	PVC	0.01	513	5	16	22	4.2		
Kirkland_Main-2704	Kirkland_Manholes-1752	27.81	Kirkland_Manholes-1736	26.69	254.8	0.44	8	PVC	0.01	467	4	8	12	2.6		
Kirkland_Main-2705	Kirkland_Manholes-1765	114.35	Kirkland_Manholes-1764	112.57	108.8	1.64	8	PVC	0.01	902	2	8	10	1.1		
Kirkland_Main-2706	Kirkland_Manholes-1764	112.57	Kirkland_Manholes-1763	111.41	74.1	1.57	8	PVC	0.01	882	7	16	23	2.6		
Kirkland_Main-2707	Kirkland_Manholes-1763	111.41	Kirkland_Manholes-1761	99.41	212.2	5.65	10	PVC	0.01	3,040	12	58	70	2.3		

Existing - Peak Hour Flow - Pipe Capacity Table

Label	Upstream Node	Upstream Invert Elevation (ft)	Downstream Node	Downstream Invert Elevation (ft)	Length (ft)	Slope (%)	Diameter (in)	Material	Manning's n	Design Capacity (gpm)	Domestic Flow (gpm)	I/I Flow (gpm)	Total Flow (gpm)	Percent Full (%)	CIP No.	Notes
Kirkland_Main-2708	Kirkland_Manholes-1761	99.41	Kirkland_Manholes-1762	98.88	52.5	1.01	12	Concrete	0.013	1,607	29	198	227	14.1	SM14-Ex-EX166	
Kirkland_Main-2709	Kirkland_Manholes-1706	124.78	Kirkland_Manholes-1761	99.41	406.8	6.24	12	Concrete	0.013	3,993	17	132	149	3.7	SM14-Ex-EX166	
Kirkland_Main-2710	Kirkland_Manholes-1766	113.7	Kirkland_Manholes-1763	111.41	43.4	5.28	8	Concrete	0.013	1,246	5	33	38	3.1	SM14-Ex-EX168	
Kirkland_Main-2711	Kirkland_Manholes-1767	122.16	Kirkland_Manholes-1766	113.7	181	4.67	8	Concrete	0.013	1,173	5	25	30	2.5	SM14-Ex-EX168	
Kirkland_Main-2712	Kirkland_Manholes-1674	78.95	Kirkland_Manholes-1774	71.66	398	1.83	8	PVC	0.01	954	65	206	270	28.3		
Kirkland_Main-2713	Kirkland_Manholes-1774	71.66	Kirkland_Manholes-1773	69.68	129.9	1.52	8	PVC	0.01	871	66	214	280	32.2		
Kirkland_Main-2714	Kirkland_Manholes-1773	69.68	Kirkland_Manholes-1772	68.31	220	0.62	8	PVC	0.01	556	73	222	296	53.2		
Kirkland_Main-2715	Kirkland_Manholes-1768	72.13	Kirkland_Manholes-1772	68.31	229.6	1.66	12	Concrete	0.013	2,062	45	247	292	14.2	SM14-Ex-EX166	
Kirkland_Main-2716	Kirkland_Manholes-1775	102.05	Kirkland_Manholes-1771	101.91	35.5	0.4	8	PVC	0.01	446	5	8	13	2.9		Drop Connection
Kirkland_Main-2717	Kirkland_Manholes-1771	99.82	Kirkland_Manholes-1770	99.51	78	0.4	8	PVC	0.01	446	6	16	22	5		Drop Connection
Kirkland_Main-2718	Kirkland_Manholes-1770	92.14	Kirkland_Manholes-1769	80.52	165	7.04	8	PVC	0.01	1,871	7	25	31	1.7		
Kirkland_Main-2719	Kirkland_Manholes-1769	80.52	Kirkland_Manholes-1768	72.13	44.6	18.83	8	PVC	0.01	3,059	7	33	40	1.3		
Kirkland_Main-2720	Kirkland_Manholes-1762	98.88	Kirkland_Manholes-1768	72.13	281.2	9.51	12	Concrete	0.013	4,932	30	206	235	4.8	SM14-Ex-EX166	
Kirkland_Main-2721	Kirkland_Manholes-1742	45.09	Kirkland_Manholes-1740	35.99	141.8	6.42	10	PVC	0.01	3,238	177	478	654	20.2		
Kirkland_Main-2722	Kirkland_Manholes-1741	41.4	Kirkland_Manholes-1740	35.99	19.3	27.98	8	PVC	0.01	3,729	71	74	145	3.9		
Kirkland_Main-2723	Kirkland_Manholes-1722	47.26	Kirkland_Manholes-1742	45.09	91	2.38	12	PVC	0.01	3,210	177	469	646	20.1		
Kirkland_Main-2724	Kirkland_Manholes-1760	56.49	Kirkland_Manholes-1722	47.26	220.7	4.18	10	PVC	0.01	2,614	138	436	574	22		
Kirkland_Main-2725	Kirkland_Manholes-2143	61.9	Kirkland_Manholes-1760	56.49	198.1	2.73	10	PVC	0.01	2,112	124	428	552	26.1		
Kirkland_Main-2726	Kirkland_Manholes-1738	34.54	Kirkland_Manholes-1728	26.2	233.5	3.57	8	Concrete	0.013	1,025	30	16	47	4.6	SM14-Ex-EX184	
Kirkland_Main-2727	Kirkland_Manholes-1739	35.68	Kirkland_Manholes-1738	34.54	39.2	2.91	8	Concrete	0.013	925	0	8	8	0.9	SM14-Ex-EX184	
Kirkland_Main-2730	Kirkland_Manholes-1783	44.54	Kirkland_Manholes-1784	44.07	47.4	1	8	PVC	0.01	705	65	66	131	18.6		
Kirkland_Main-2731	Kirkland_Manholes-1786	41.21	Kirkland_Manholes-733	35.72	39.3	13.98	10	PVC	0.01	4,780	66	99	165	3.4		
Kirkland_Main-2732	Kirkland_Manholes-1787	42.06	Kirkland_Manholes-1786	41.21	134.7	0.63	10	PVC	0.01	1,016	66	91	157	15.4		
Kirkland_Main-2733	Kirkland_Manholes-1785	42.96	Kirkland_Manholes-1787	42.06	131.8	0.68	10	PVC	0.01	1,056	65	82	147	13.9		
Kirkland_Main-2734	Kirkland_Manholes-1920	409.24	Kirkland_Manholes-2925	409	89.7	0.27	8	Concrete	0.013	281	90	366	455	162.3	SM14-Ex-EX215	
Kirkland_Main-2735	Kirkland_Manholes-2925	409	Kirkland_Manholes-1921	405.86	161.9	1.94	8	Concrete	0.013	755	91	370	460	60.9	SM14-Ex-EX215	
Kirkland_Main-2736	Kirkland_Manholes-1784	44.07	Kirkland_Manholes-1785	42.96	150	0.74	10	PVC	0.01	1,100	65	74	139	12.7		
Kirkland_Main-2737	Kirkland_Manholes-1782	44.9	Kirkland_Manholes-1783	44.54	88.3	0.4	8	PVC	0.01	446	65	58	123	27.5		
Kirkland_Main-2738	Kirkland_Manholes-1781	45.04	Kirkland_Manholes-1782	44.9	34.7	0.4	8	PVC	0.01	446	65	49	114	25.7		
Kirkland_Main-2739	Kirkland_Manholes-1777	45.35	Kirkland_Manholes-1781	45.04	78.1	0.4	8	PVC	0.01	446	65	41	106	23.8		
Kirkland_Main-2740	Kirkland_Manholes-1779	45.97	Kirkland_Manholes-1778	45.85	28.6	0.4	8	PVC	0.01	446	5	16	21	4.8		
Kirkland_Main-2741	Kirkland_Manholes-1778	45.85	Kirkland_Manholes-1777	45.35	126.1	0.4	8	PVC	0.01	446	62	25	87	19.5		
Kirkland_Main-2742	Kirkland_Manholes-1780	57.25	Kirkland_Manholes-1779	45.97	252.4	4.47	8	PVC	0.01	1,491	5	8	13	0.9		
Kirkland_Main-2743	Kirkland_Manholes-1776	46.25	Kirkland_Manholes-1777	45.35	244.9	0.37	8	PVC	0.01	428	3	8	11	2.6		
Kirkland_Main-2745	Kirkland_Manholes-1696	58.41	Kirkland_Manholes-1695	51.29	146.7	4.85	8	Concrete	0.013	1,195	50	222	273	22.8	SM14-Ex-EX96	
Kirkland_Main-2746	Kirkland_Manholes-1695	51.29	Kirkland_Manholes-1694	44.12	135.5	5.29	8	Concrete	0.013	1,248	52	231	283	22.7	SM14-Ex-EX96	
Kirkland_Main-2748	Kirkland_Manholes-2107	69.19	Kirkland_Manholes-2106	63.43	225	2.56	6	Concrete	0.013	403	1	6	8	1.9	SM14-Ex-EX227	
Kirkland_Main-2749	Kirkland_Manholes-2108	68.46	Kirkland_Manholes-2109	59.77	298.6	2.91	8	Concrete	0.013	925	52	146	198	21.4	SM14-Ex-EX222	
Kirkland_Main-2750	Kirkland_Manholes-2119	72.3	Kirkland_Manholes-2108	68.46	400.8	0.96	8	Concrete	0.013	531	42	97	139	26.3	SM14-Ex-EX222	
Kirkland_Main-2751	Kirkland_Manholes-2511	85.9	Kirkland_Manholes-2108	85.31	148.4	0.4	6	Concrete	0.013	159	10	43	52	32.9	SM14-Ex-EX229	Drop Connection
Kirkland_Main-2752	Kirkland_Manholes-2109	59.77	Kirkland_Manholes-2111	59.56	305.5	0.07	12	Concrete	0.013	419	55	152	207	49.3	SM14-Ex-EX222	
Kirkland_Main-2753	Kirkland_Manholes-2110	60.2	Kirkland_Manholes-2111	59.56	55.5	1.15	8	Concrete	0.013	583	13	36	49	8.4	SM14-Ex-EX232	
Kirkland_Main-2754	Kirkland_Manholes-2112	88.66	Kirkland_Manholes-2110	60.2	228.7	12.44	6	Concrete	0.013	888	12	30	43	4.8	SM14-Ex-EX232	
Kirkland_Main-2755	Kirkland_Manholes-2115	91.85	Kirkland_Manholes-2112	88.66	62.8	5.08	6	PVC	0.01	738	8	24	32	4.4	SM14-Ex-EX232	
Kirkland_Main-2756	Kirkland_Manholes-2113	121.3	Kirkland_Manholes-2115	91.85	150.4	19.59	6	PVC	0.01	1,449	4	12	17	1.1	SM14-Ex-EX232	
Kirkland_Main-2757	Kirkland_Manholes-2114	121.77	Kirkland_Manholes-2113	121.3	207.4	0.23	8	PVC	0.01	336	3	6	9	2.7		
Kirkland_Main-2758	Kirkland_Manholes-2116	91.9	Kirkland_Manholes-2115	91.85	279.7	0.02	8	Concrete	0.013	73	3	6	9	12.6	SM14-Ex-EX232	
Kirkland_Main-2759	Kirkland_Manholes-2146	75.22	Kirkland_Manholes-2117	74.65	143.2	0.4	8	Concrete	0.013	343	28	85	113	33	SM14-Ex-EX222	Drop Connection
Kirkland_Main-2760	Kirkland_Manholes-2117	73.78	Kirkland_Manholes-2119	72.3	427.2	0.35	8	Concrete	0.013	319	28	91	120	37.5	SM14-Ex-EX222	
Kirkland_Main-2761	Kirkland_Manholes-2445	191.11	Kirkland_Manholes-2490	173.27	210.3	8.48	8	Concrete	0.013	1,580	20	68	87	5.5	SM14-Ex-EX243	
Kirkland_Main-2763	Kirkland_Manholes-2446	217.36	Kirkland_Manholes-2444	199.73	226.7	7.78	8	Concrete	0.013	1,512	3	12	15	1	SM14-Ex-EX245	
Kirkland_Main-2765	Kirkland_Manholes-1862	286.87	Kirkland_Manholes-1863	286.75	31.1	0.4	8	PVC	0.01	446	63	131	194	43.5		Drop Connection
Kirkland_Main-2766	Kirkland_Manholes-1863	286.33	Kirkland_Manholes-1864	285.22	36.3	3.06	8	PVC	0.01	1,233	63	135	198	16.1		
Kirkland_Main-2767	Kirkland_Manholes-1864	285.22	Kirkland_Manholes-1866	277.54	215.1	3.57	8	PVC	0.01	1,332	67	147	214	16.1		
Kirkland_Main-2768	Kirkland_Manholes-1865	285.61	Kirkland_Manholes-1864	285.22	36.3	1.07	8	PVC	0.01	731	4	8	12	1.7		
Kirkland_Main-2769	Kirkland_Manholes-2770	287.2	Kirkland_Manholes-1865	285.61	339.1	0.47	8	PVC	0.01	483	4	4	8	1.7		
Kirkland_Main-2770	Kirkland_Manholes-1871	279.1	Kirkland_Manholes-1866	277.54	120.2	1.3	8	PVC	0.01	803	3	28	31	3.8		
Kirkland_Main-2771	Kirkland_Manholes-1866	277.54	Kirkland_Manholes-1867	276.54	31.1	3.22	8	PVC	0.01	1,264	70	179	249	19.7		
Kirkland_Main-2772	Kirkland_Manholes-1867	276.54	Kirkland_Manholes-1868	257.42	267.6	7.15	8	PVC	0.01	1,885	70	183	253	13.4		
Kirkland_Main-2773	Kirkland_Manholes-1868	257.42	Kirkland_Manholes-1888	254.12	73.1	4.51	10	PVC	0.01	2,715	116	262	378	13.9		
Kirkland_Main-2774	Kirkland_Manholes-1887	260.26	Kirkland_Manholes-1868	257.42	270	1.05	8	PVC	0.01	723	45	75	120	16.6		
Kirkland_Main-2775	Kirkland_Manholes-1869	292.56	Kirkland_Manholes-1870	286.99	206.4	2.7	8	PVC	0.01	1,158	3	4	7	0.6		

Existing - Peak Hour Flow - Pipe Capacity Table

Label	Upstream Node	Upstream Invert Elevation (ft)	Downstream Node	Downstream Invert Elevation (ft)	Length (ft)	Slope (%)	Diameter (in)	Material	Manning's n	Design Capacity (gpm)	Domestic Flow (gpm)	I/I Flow (gpm)	Total Flow (gpm)	Percent Full (%)	CIP No.	Notes
Kirkland_Main-2776	Kirkland_Manholes-1870	286.99	Kirkland_Manholes-1871	279.1	130.7	6.04	8	PVC	0.01	1,732	3	8	11	0.6		
Kirkland_Main-2777	Kirkland_Manholes-1872	282.33	Kirkland_Manholes-1871	279.1	27.4	11.77	8	PVC	0.01	2,419	0	16	16	0.7		
Kirkland_Main-2778	Kirkland_Manholes-1896	286.15	Kirkland_Manholes-1872	282.33	252.6	1.51	8	PVC	0.01	867	0	12	12	1.4		
Kirkland_Main-2779	Kirkland_Manholes-1895	288.31	Kirkland_Manholes-1896	286.15	156.7	1.38	8	PVC	0.01	828	0	8	8	1		
Kirkland_Main-2781	Kirkland_Manholes-1894	292.07	Kirkland_Manholes-1895	288.31	37.7	9.98	8	PVC	0.01	2,227	0	4	4	0.2		
Kirkland_Main-2785	Kirkland_Manholes-1893	314.62	Kirkland_Manholes-1892	301.26	174.3	7.66	8	PVC	0.01	1,952	21	32	53	2.7		
Kirkland_Main-2786	Kirkland_Manholes-1892	301.26	Kirkland_Manholes-1882	297.55	110.1	3.37	8	PVC	0.01	1,294	24	40	63	4.9		
Kirkland_Main-2787	Kirkland_Manholes-1882	297.55	Kirkland_Manholes-1885	271.65	301.6	8.59	8	PVC	0.01	2,066	29	44	73	3.5		
Kirkland_Main-2788	Kirkland_Manholes-1883	295.15	Kirkland_Manholes-1885	271.65	83.7	28.09	8	PVC	0.01	3,737	8	20	28	0.7		
Kirkland_Main-2789	Kirkland_Manholes-1889	296.4	Kirkland_Manholes-1883	295.15	155.2	0.81	8	PVC	0.01	633	8	16	24	3.8		
Kirkland_Main-2790	Kirkland_Manholes-1884	299.38	Kirkland_Manholes-1889	296.4	51.3	5.81	8	PVC	0.01	1,699	4	12	16	0.9		
Kirkland_Main-2791	Kirkland_Manholes-1891	305.89	Kirkland_Manholes-1890	303.36	105.7	2.39	8	PVC	0.01	1,091	3	4	7	0.7		
Kirkland_Main-2792	Kirkland_Manholes-1890	303.36	Kirkland_Manholes-1884	299.38	71.4	5.58	8	PVC	0.01	1,665	4	8	12	0.7		
Kirkland_Main-2793	Kirkland_Manholes-1885	271.65	Kirkland_Manholes-1886	262.12	238.5	4	8	PVC	0.01	1,409	44	68	111	7.9		
Kirkland_Main-2794	Kirkland_Manholes-1886	262.12	Kirkland_Manholes-1887	260.26	298.4	0.62	8	PVC	0.01	557	44	72	115	20.7		
Kirkland_Main-2795	Kirkland_Manholes-1888	254.12	Kirkland_Manholes-1897	245.38	209.5	4.17	8	PVC	0.01	1,440	136	310	446	31		
Kirkland_Main-2796	Kirkland_Manholes-1877	246.77	Kirkland_Manholes-1873	243.35	391.2	0.87	8	PVC	0.01	659	55	119	174	26.4		
Kirkland_Main-2797	Kirkland_Manholes-1873	243.35	Kirkland_Manholes-1874	243.32	295.9	0.01	15	PVC	0.01	379	191	437	629	165.6	SM14-Ex-EX134	
Kirkland_Main-2798	Kirkland_Manholes-1875	249.18	Kirkland_Manholes-1876	247.77	111.8	1.26	8	PVC	0.01	792	22	4	26	3.3		
Kirkland_Main-2799	Kirkland_Manholes-1876	247.77	Kirkland_Manholes-1877	246.77	320.2	0.31	8	PVC	0.01	394	22	16	38	9.7		
Kirkland_Main-2800	Kirkland_Manholes-1878	249.88	Kirkland_Manholes-1877	246.77	242.5	1.28	8	PVC	0.01	798	32	99	132	16.5		
Kirkland_Main-2801	Kirkland_Manholes-1874	243.32	Kirkland_Manholes-1571	242.76	271.1	0.21	15	PVC	0.01	1,713	191	441	632	36.9		
Kirkland_Main-2802	Kirkland_Manholes-1881	267.11	Kirkland_Manholes-1879	258.08	239.4	3.77	8	PVC	0.01	1,369	30	87	117	8.6		
Kirkland_Main-2803	Kirkland_Manholes-1880	260.03	Kirkland_Manholes-1879	258.08	143.3	1.36	8	PVC	0.01	822	2	4	6	0.7		
Kirkland_Main-2805	Kirkland_Manholes-1879	258.08	Kirkland_Manholes-1878	249.88	231.7	3.54	8	PVC	0.01	1,326	32	95	128	9.6		
Kirkland_Main-2806	Kirkland_Manholes-1897	245.38	Kirkland_Manholes-1873	243.35	282.6	0.72	10	PVC	0.01	1,084	136	314	450	41.6		
Kirkland_Main-2807	Kirkland_Manholes-1902	406.33	Kirkland_Manholes-1899	405.32	253.1	0.4	8	PVC	0.01	447	1	4	5	1.1		
Kirkland_Main-2808	Kirkland_Manholes-1899	405.32	Kirkland_Manholes-1898	404.75	141.4	0.4	8	PVC	0.01	446	2	8	9	2.1		
Kirkland_Main-2809	Kirkland_Manholes-1898	404.75	Kirkland_Manholes-1900	402.51	135.8	1.65	8	PVC	0.01	905	3	12	15	1.6		
Kirkland_Main-2810	Kirkland_Manholes-1900	402.51	Kirkland_Manholes-1901	396.95	219.6	2.53	8	PVC	0.01	1,122	4	16	20	1.8		
Kirkland_Main-2811	Kirkland_Manholes-1901	396.95	Kirkland_Manholes-1905	395.5	142.8	1.02	8	PVC	0.01	711	5	20	25	3.5		
Kirkland_Main-2812	Kirkland_Manholes-1903	399.77	Kirkland_Manholes-1904	399.67	107.5	0.09	8	PVC	0.01	215	3	12	15	7.1		
Kirkland_Main-2813	Kirkland_Manholes-1904	399.67	Kirkland_Manholes-1905	395.5	126.3	3.3	8	PVC	0.01	1,281	4	16	20	1.6		
Kirkland_Main-2814	Kirkland_Manholes-2220	93.99	Kirkland_Manholes-2219	92.24	194.8	0.9	8	PVC	0.01	668	1	6	7	1.1		
Kirkland_Main-2815	Kirkland_Manholes-2219	92.24	Kirkland_Manholes-2218	82.71	300.9	3.17	8	PVC	0.01	1,255	3	13	16	1.3		
Kirkland_Main-2824	Kirkland_Manholes-2222	72.19	Kirkland_Manholes-2221	60.29	232.5	5.12	8	PVC	0.01	1,595	3	19	23	1.4		
Kirkland_Main-2825	Kirkland_Manholes-2223	75.05	Kirkland_Manholes-2222	72.19	181.6	1.58	8	PVC	0.01	885	2	13	15	1.6		
Kirkland_Main-2826	Kirkland_Manholes-2224	76.4	Kirkland_Manholes-2223	75.05	210.4	0.64	8	PVC	0.01	565	1	6	7	1.3		
Kirkland_Main-2829	Kirkland_Manholes-2233	60.15	Kirkland_Manholes-2232	48.59	76.7	15.07	8	PVC	0.01	2,737	14	6	21	0.8		
Kirkland_Main-2830	Kirkland_Manholes-2232	48.59	Kirkland_Manholes-2231	25.71	219.7	10.42	8	PVC	0.01	2,275	15	13	28	1.2		
Kirkland_Main-2831	Kirkland_Manholes-2231	25.71	Kirkland_Manholes-2230	23.3	56.5	4.26	8	PVC	0.01	1,456	15	19	34	2.4		
Kirkland_Main-2832	Kirkland_Manholes-2230	23.3	Kirkland_Manholes-2229	22.53	34.1	2.26	8	PVC	0.01	1,060	15	32	47	4.5		
Kirkland_Main-2833	Kirkland_Manholes-2210	47.75	Kirkland_Manholes-2205	23.1	33.9	72.62	8	Ductile Iron	0.012	5,007	6	26	32	0.6	SM14-Ex-EX189	Slope verified in as-builts
Kirkland_Main-2834	Kirkland_Manholes-2211	51.73	Kirkland_Manholes-2210	47.75	86.6	4.6	8	PVC	0.01	1,512	6	19	26	1.7		
Kirkland_Main-2835	Kirkland_Manholes-2207	54.13	Kirkland_Manholes-2211	51.73	163.6	1.47	8	PVC	0.01	854	0	13	13	1.6		
Kirkland_Main-2836	Kirkland_Manholes-2206	66.42	Kirkland_Manholes-2198	65.46	282.2	0.34	6	Concrete	0.013	147	2	16	18	12.2	SM8	
Kirkland_Main-2837	Kirkland_Manholes-2198	65.46	Kirkland_Manholes-2193	64.5	239.8	0.4	8	Concrete	0.013	343	3	25	28	8.1	SM14-Ex-EX187	
Kirkland_Main-2839	Kirkland_Manholes-2084	179.07	Kirkland_Manholes-2069	170.43	427.7	2.02	10	Concrete	0.013	1,398	62	72	134	9.6	SM14-Ex-EX199	
Kirkland_Main-2840	Kirkland_Manholes-2085	183.55	Kirkland_Manholes-2084	179.07	426.7	1.05	10	Concrete	0.013	1,008	62	68	129	12.8	SM14-Ex-EX199	
Kirkland_Main-2841	Kirkland_Manholes-2086	187.61	Kirkland_Manholes-2085	183.55	445.4	0.91	10	Concrete	0.013	939	60	64	123	13.2	SM1	
Kirkland_Main-2842	Kirkland_Manholes-2074	213.49	Kirkland_Manholes-2086	187.61	333.1	7.77	8	Concrete	0.013	1,512	45	52	97	6.4	SM14-Ex-EX246	
Kirkland_Main-2843	Kirkland_Manholes-2087	189.64	Kirkland_Manholes-2086	187.61	250.4	0.81	8	Concrete	0.013	488	8	8	16	3.2	SM1	
Kirkland_Main-2844	Kirkland_Manholes-2301	194.13	Kirkland_Manholes-2087	189.64	258.5	1.74	8	Concrete	0.013	715	0	4	4	0.6	SM1	
Kirkland_Main-2845	Kirkland_Manholes-2838	108.96	Kirkland_Manholes-2837	104.37	77.8	5.9	8	PVC	0.01	1,712	5	6	11	0.7		
Kirkland_Main-2846	Kirkland_Manholes-2837	104.37	Kirkland_Manholes-2836	60.97	275.8	15.74	8	PVC	0.01	2,797	5	12	17	0.6		
Kirkland_Main-2847	Kirkland_Manholes-2834	37.62	Kirkland_Manholes-2849	29.21	55.8	15.07	12	Concrete	0.013	6,208	32	128	159	2.6	SM14-Ex-EX316	
Kirkland_Main-2848	Kirkland_Manholes-2833	29.99	Kirkland_Manholes-2849	29.21	264.4	0.3	15	Concrete	0.013	1,575	439	1,076	1,587	100.8	SM14-Ex-EX309	
Kirkland_Main-2849	Kirkland_Manholes-2849	29.21	Kirkland_Manholes-2848	28.9	205.9	0.15	15	Concrete	0.013	1,123	471	1,210	1,752	156	SM14-Ex-EX309	Drop Connection
Kirkland_Main-2850	Kirkland_Manholes-2848	27.55	Kirkland_Manholes-2842	26.9	429.8	0.15	15	Concrete	0.013	1,127	474	1,216	1,762	156.3	SM14-Ex-EX309	
Kirkland_Main-2851	Kirkland_Manholes-1941	361.64	Kirkland_Manholes-1942	350.59	169	6.54	8	PVC	0.01	1,803	2	8	10	0.6		
Kirkland_Main-2852	Kirkland_Manholes-1943	356.18	Kirkland_Manholes-1942	350.59	121.8	4.59	8	PVC	0.01	1,511	0	4	4	0.3		
Kirkland_Main-2853	Kirkland_Manholes-1942	350.59	Kirkland_Manholes-1577	341.43	212	4.32	8	PVC	0.01	1,465	3	16	19	1.3		

Existing - Peak Hour Flow - Pipe Capacity Table

Label	Upstream Node	Upstream Invert Elevation (ft)	Downstream Node	Downstream Invert Elevation (ft)	Length (ft)	Slope (%)	Diameter (in)	Material	Manning's n	Design Capacity (gpm)	Domestic Flow (gpm)	I/I Flow (gpm)	Total Flow (gpm)	Percent Full (%)	CIP No.	Notes
Kirkland_Main-2854	Kirkland_Manholes-1944	388.13	Kirkland_Manholes-1945	370.88	207.3	8.32	8	PVC	0.01	2,034	0	4	4	0.2		
Kirkland_Main-2855	Kirkland_Manholes-1945	370.88	Kirkland_Manholes-1946	363.75	185.3	3.85	8	PVC	0.01	1,383	1	8	9	0.7		
Kirkland_Main-2856	Kirkland_Manholes-1946	363.75	Kirkland_Manholes-1947	358.01	122.1	4.7	8	PVC	0.01	1,529	2	12	13	0.9		
Kirkland_Main-2857	Kirkland_Manholes-1947	358.01	Kirkland_Manholes-1948	350.2	125.9	6.2	8	PVC	0.01	1,756	2	16	18	1		
Kirkland_Main-2858	Kirkland_Manholes-1949	352.67	Kirkland_Manholes-1948	350.2	274.7	0.9	8	PVC	0.01	669	2	4	6	0.9		
Kirkland_Main-2859	Kirkland_Manholes-1948	350.2	Kirkland_Manholes-1950	344.53	121.4	4.67	8	PVC	0.01	1,524	5	24	29	1.9		
Kirkland_Main-2860	Kirkland_Manholes-1950	344.53	Kirkland_Manholes-1893	314.62	313.2	9.55	8	PVC	0.01	2,179	6	28	34	1.5		
Kirkland_Main-2861	Kirkland_Manholes-1952	275.36	Kirkland_Manholes-1951	275.06	208.2	0.14	8	PVC	0.01	268	3	40	43	16.1		
Kirkland_Main-2862	Kirkland_Manholes-1953	290.71	Kirkland_Manholes-1952	275.36	336.8	4.56	8	PVC	0.01	1,505	3	36	39	2.6		
Kirkland_Main-2863	Kirkland_Manholes-1957	343.4	Kirkland_Manholes-1956	335.87	142.5	5.28	8	PVC	0.01	1,620	0	4	4	0.2		
Kirkland_Main-2864	Kirkland_Manholes-1956	335.87	Kirkland_Manholes-1955	335.45	105.5	0.4	8	PVC	0.01	446	0	8	8	1.8		
Kirkland_Main-2865	Kirkland_Manholes-1975	436.73	Kirkland_Manholes-1974	432	247.5	1.91	8	PVC	0.01	975	21	123	144	14.7		
Kirkland_Main-2866	Kirkland_Manholes-1976	440.77	Kirkland_Manholes-1975	436.73	231.1	1.75	8	PVC	0.01	932	9	40	49	5.2		
Kirkland_Main-2867	Kirkland_Manholes-1978	440.32	Kirkland_Manholes-1975	436.73	342.8	1.05	8	PVC	0.01	721	11	79	90	12.5		
Kirkland_Main-2868	Kirkland_Manholes-1977	454.61	Kirkland_Manholes-1976	440.77	262.5	5.27	8	PVC	0.01	1,619	5	32	37	2.3		
Kirkland_Main-2869	Kirkland_Manholes-1980	464.9	Kirkland_Manholes-1977	454.61	328.6	3.13	8	PVC	0.01	1,248	4	24	28	2.2		
Kirkland_Main-2870	Kirkland_Manholes-1979	446.84	Kirkland_Manholes-1978	440.32	179.3	3.64	8	PVC	0.01	1,345	2	4	6	0.4		
Kirkland_Main-2871	Kirkland_Manholes-1984	465.6	Kirkland_Manholes-1980	464.9	159.8	0.44	8	PVC	0.01	467	3	16	19	4		
Kirkland_Main-2872	Kirkland_Manholes-1982	470.94	Kirkland_Manholes-1980	464.9	329.7	1.83	8	PVC	0.01	954	1	4	5	0.5		
Kirkland_Main-2873	Kirkland_Manholes-1985	470.88	Kirkland_Manholes-1981	467.1	204.6	1.85	8	PVC	0.01	958	1	4	5	0.5		
Kirkland_Main-2874	Kirkland_Manholes-1986	467.24	Kirkland_Manholes-1981	467.1	144.7	0.1	8	PVC	0.01	219	0	4	4	1.9		
Kirkland_Main-2875	Kirkland_Manholes-1983	469.93	Kirkland_Manholes-2019	467.83	75.8	2.77	8	PVC	0.01	1,174	1	4	4	0.4		
Kirkland_Main-2876	Kirkland_Manholes-1981	467.1	Kirkland_Manholes-1984	465.6	153	0.98	8	PVC	0.01	698	1	12	13	1.9		
Kirkland_Main-2877	Kirkland_Manholes-1987	443.37	Kirkland_Manholes-1976	440.77	252.9	1.03	8	PVC	0.01	715	1	4	5	0.7		
Kirkland_Main-2878	Kirkland_Manholes-2002	429.3	Kirkland_Manholes-2000	426.18	243.7	1.28	8	Concrete	0.013	614	0	8	8	1.4	SM14-Ex-EX209	
Kirkland_Main-2879	Kirkland_Manholes-2000	426.18	Kirkland_Manholes-2001	424.5	24.1	6.98	8	Concrete	0.013	1,433	12	64	75	5.3	SM14-Ex-EX209	
Kirkland_Main-2880	Kirkland_Manholes-1999	430.91	Kirkland_Manholes-2000	426.18	304.8	1.55	8	Concrete	0.013	676	11	52	63	9.3	SM14-Ex-EX211	
Kirkland_Main-2881	Kirkland_Manholes-2001	424.5	Kirkland_Manholes-2063	422.68	357.6	0.51	8	Concrete	0.013	387	12	68	79	20.5	SM14-Ex-EX209	
Kirkland_Main-2882	Kirkland_Manholes-2003	431.01	Kirkland_Manholes-2002	429.3	155.3	1.1	8	PVC	0.01	740	0	4	4	0.5		
Kirkland_Main-2883	Kirkland_Manholes-2015	418.27	Kirkland_Manholes-2014	416.63	83.6	1.96	8	PVC	0.01	988	19	87	106	10.8		
Kirkland_Main-2884	Kirkland_Manholes-2014	416.63	Kirkland_Manholes-2013	413.74	146.6	1.97	8	PVC	0.01	990	19	91	111	11.2		
Kirkland_Main-2886	Kirkland_Manholes-2010	424.43	Kirkland_Manholes-2016	421.46	333.6	0.89	8	PVC	0.01	665	16	79	96	14.4		
Kirkland_Main-2887	Kirkland_Manholes-2016	421.46	Kirkland_Manholes-2015	418.27	330.4	0.97	8	PVC	0.01	693	18	83	101	14.6		
Kirkland_Main-2889	Kirkland_Manholes-2021	473.17	Kirkland_Manholes-2020	468.34	27.5	17.56	8	PVC	0.01	2,954	24	91	116	3.9		
Kirkland_Main-2890	Kirkland_Manholes-2020	468.34	Kirkland_Manholes-2019	467.83	127.5	0.4	10	PVC	0.01	809	98	238	337	41.7		
Kirkland_Main-2891	Kirkland_Manholes-2023	466.76	Kirkland_Manholes-2022	466	41.6	1.83	8	PVC	0.01	953	7	20	27	2.8		
Kirkland_Main-2892	Kirkland_Manholes-2037	465.67	Kirkland_Manholes-2036	452.58	367.2	3.57	8	Concrete	0.013	1,024	9	16	25	2.5	SM14-Ex-EX266	
Kirkland_Main-2893	Kirkland_Manholes-2041	465.42	Kirkland_Manholes-2042	455.6	502.4	1.95	8	Concrete	0.013	758	2	4	6	0.8	SM14-Ex-EX265	
Kirkland_Main-2894	Kirkland_Manholes-2042	455.6	Kirkland_Manholes-2043	454.68	150.3	0.61	8	Concrete	0.013	424	67	278	345	81.3	SM14-Ex-EX214	
Kirkland_Main-2895	Kirkland_Manholes-2044	435.14	Kirkland_Manholes-2045	432.5	20.8	12.67	8	PVC	0.01	2,510	69	286	355	14.1	SM14-Ex-EX214	
Kirkland_Main-2896	Kirkland_Manholes-2043	454.68	Kirkland_Manholes-2044	435.14	356.2	5.49	8	Concrete	0.013	1,270	68	282	350	27.5	SM14-Ex-EX214	
Kirkland_Main-2897	Kirkland_Manholes-2046	437.24	Kirkland_Manholes-2045	432.5	199.5	2.38	10	PVC	0.01	1,970	127	338	464	23.6		
Kirkland_Main-2898	Kirkland_Manholes-2047	441.15	Kirkland_Manholes-2046	437.24	49.2	7.95	10	PVC	0.01	3,605	126	334	460	12.7		
Kirkland_Main-2899	Kirkland_Manholes-2048	442.51	Kirkland_Manholes-2047	441.15	76.6	1.77	8	Concrete	0.013	723	125	330	455	63	SM14-Ex-EX264	
Kirkland_Main-2900	Kirkland_Manholes-2049	454.48	Kirkland_Manholes-2050	439.64	163.1	9.1	8	Concrete	0.013	1,636	1	4	5	0.3	SM14-Ex-EX263	
Kirkland_Main-2901	Kirkland_Manholes-2050	439.64	Kirkland_Manholes-2051	434.18	313	1.74	8	Concrete	0.013	716	3	8	11	1.5	SM14-Ex-EX263	
Kirkland_Main-2902	Kirkland_Manholes-2051	434.18	Kirkland_Manholes-2054	429.73	307.2	1.45	8	Concrete	0.013	653	5	12	17	2.5	SM14-Ex-EX263	
Kirkland_Main-2903	Kirkland_Manholes-2053	424.91	Kirkland_Manholes-2285	419.89	165.8	3.03	8	Concrete	0.013	944	1	4	5	0.5	SM14-Ex-EX248	
Kirkland_Main-2904	Kirkland_Manholes-2054	429.73	Kirkland_Manholes-2055	427.92	21.3	8.48	8	PVC	0.01	2,053	5	16	21	1		
Kirkland_Main-2905	Kirkland_Manholes-3044	18.06	Kirkland_Manholes-2736	17.76	69.7	0.43	18	Concrete	0.013	3,093	212	516	728	23.5	SM14-Ex-EX289	
Kirkland_Main-2906	Kirkland_Manholes-2045	432.5	Kirkland_Manholes-2055	427.92	351.4	1.3	10	PVC	0.01	1,460	196	628	824	56.5		
Kirkland_Main-2907	Kirkland_Manholes-2057	422.6	Kirkland_Manholes-2056	422.2	14.4	2.79	10	PVC	0.01	2,134	203	664	866	40.6		
Kirkland_Main-2908	Kirkland_Manholes-1848	462	Kirkland_Manholes-1216	443.89	186.3	9.72	8	PVC	0.01	2,198	2	4	6	0.3		
Kirkland_Main-2909	Kirkland_Manholes-2056	422.2	Kirkland_Manholes-2285	419.89	62.2	3.71	8	PVC	0.01	1,359	203	668	870	64.1		
Kirkland_Main-2910	Kirkland_Manholes-2058	427.27	Kirkland_Manholes-2057	422.6	119.2	3.92	10	PVC	0.01	2,531	202	660	862	34.1		
Kirkland_Main-2911	Kirkland_Manholes-2055	427.92	Kirkland_Manholes-2058	427.27	53.1	1.22	10	PVC	0.01	1,414	202	648	849	60.1		
Kirkland_Main-2912	Kirkland_Manholes-2059	433	Kirkland_Manholes-2058	427.27	231.2	2.48	8	Concrete	0.013	854	0	8	8	1	SM14-Ex-EX213	
Kirkland_Main-2913	Kirkland_Manholes-3082	428.49	Kirkland_Manholes-1992	427.27	187.8	0.65	8	PVC	0.01	568	2	8	10	1.8		
Kirkland_Main-2914	Kirkland_Manholes-1992	427.27	Kirkland_Manholes-2009	426.97	143.6	0.21	8	PVC	0.01	322	10	48	57	17.8		
Kirkland_Main-2915	Kirkland_Manholes-1991	431.18	Kirkland_Manholes-1992	427.27	327	1.2	8	PVC	0.01	771	7	36	43	5.6		
Kirkland_Main-2916	Kirkland_Manholes-2004	427.75	Kirkland_Manholes-2010	424.43	322.6	1.03	8	PVC	0.01	715	4	24	27	3.8		
Kirkland_Main-2917	Kirkland_Manholes-2007	429.08	Kirkland_Manholes-2004	427.75	98.7	1.35	8	PVC	0.01	819	4	20	23	2.9		

Existing - Peak Hour Flow - Pipe Capacity Table

Label	Upstream Node	Upstream Invert Elevation (ft)	Downstream Node	Downstream Invert Elevation (ft)	Length (ft)	Slope (%)	Diameter (in)	Material	Manning's n	Design Capacity (gpm)	Domestic Flow (gpm)	I/I Flow (gpm)	Total Flow (gpm)	Percent Full (%)	CIP No.	Notes
Kirkland_Main-2918	Kirkland_Manholes-2260	285.07	Kirkland_Manholes-2259	272.05	278.2	4.68	8	Concrete	0.013	1,173	238	854	1,092	93.1	SM14-Ex-EX248	
Kirkland_Main-2919	Kirkland_Manholes-2259	272.05	Kirkland_Manholes-2258	263.77	196.6	4.21	8	Concrete	0.013	1,113	243	862	1,105	99.3	SM14-Ex-EX248	
Kirkland_Main-2920	Kirkland_Manholes-2323	247.45	Kirkland_Manholes-2324	245.37	33.9	6.13	8	PVC	0.01	1,746	35	131	166	9.5		
Kirkland_Main-2921	Kirkland_Manholes-2322	259.98	Kirkland_Manholes-2323	247.45	184.9	6.78	8	Concrete	0.013	1,412	34	127	161	11.4	SM14-Ex-EX252	
Kirkland_Main-2922	Kirkland_Manholes-2325	246.61	Kirkland_Manholes-2324	245.37	131.1	0.95	8	PVC	0.01	686	5	12	17	2.4		
Kirkland_Main-2923	Kirkland_Manholes-2329	258.36	Kirkland_Manholes-2325	246.61	302.7	3.88	8	PVC	0.01	1,389	3	8	11	0.8		
Kirkland_Main-2924	Kirkland_Manholes-2328	273.89	Kirkland_Manholes-2329	258.36	228.5	6.8	8	PVC	0.01	1,838	2	4	6	0.3		
Kirkland_Main-2925	Kirkland_Manholes-2339	347.35	Kirkland_Manholes-2337	345.83	131	1.16	8	Concrete	0.013	584	3	8	11	1.8	SM14-Ex-EX256	
Kirkland_Main-2926	Kirkland_Manholes-2337	345.83	Kirkland_Manholes-2338	328.54	114.6	15.08	8	Concrete	0.013	2,106	5	12	16	0.8	SM14-Ex-EX256	
Kirkland_Main-2927	Kirkland_Manholes-2334	313.34	Kirkland_Manholes-2333	308.81	129.8	3.49	8	Concrete	0.013	1,013	25	75	100	9.9	SM14-Ex-EX252	
Kirkland_Main-2928	Kirkland_Manholes-2333	308.81	Kirkland_Manholes-2332	296.43	179.4	6.9	8	Concrete	0.013	1,425	25	79	105	7.4	SM14-Ex-EX252	
Kirkland_Main-2929	Kirkland_Manholes-2332	296.43	Kirkland_Manholes-2331	295.51	98.1	0.94	8	Concrete	0.013	525	27	87	115	21.9	SM14-Ex-EX252	
Kirkland_Main-2930	Kirkland_Manholes-2718	21.4	Kirkland_Manholes-2721	21.2	187	0.11	12	Ductile Iron	0.012	566	74	36	110	19.4	SM14-Ex-EX289	
Kirkland_Main-2931	Kirkland_Manholes-2331	295.51	Kirkland_Manholes-2330	295.18	115.3	0.29	8	Concrete	0.013	290	28	91	119	41.1	SM14-Ex-EX252	
Kirkland_Main-2932	Kirkland_Manholes-2327	280.44	Kirkland_Manholes-2326	264.71	213.4	7.37	8	Concrete	0.013	1,472	31	119	151	10.2	SM14-Ex-EX252	
Kirkland_Main-2933	Kirkland_Manholes-2326	264.71	Kirkland_Manholes-2322	259.98	165.9	2.85	8	Concrete	0.013	916	33	123	156	17	SM14-Ex-EX252	
Kirkland_Main-2935	Kirkland_Manholes-2342	370.03	Kirkland_Manholes-2339	347.35	229.4	9.89	8	Concrete	0.013	1,705	2	4	6	0.4	SM14-Ex-EX256	
Kirkland_Main-2936	Kirkland_Manholes-2340	335.99	Kirkland_Manholes-2379	312.61	331.3	7.06	8	Concrete	0.013	1,441	1	4	5	0.4	SM14-Ex-EX257	
Kirkland_Main-2937	Kirkland_Manholes-2338	328.54	Kirkland_Manholes-2341	327.28	253.7	0.5	8	Concrete	0.013	382	6	16	22	5.8	SM14-Ex-EX256	
Kirkland_Main-2938	Kirkland_Manholes-2341	327.28	Kirkland_Manholes-2335	323.22	289.5	1.4	8	Concrete	0.013	642	9	24	33	5.1	SM14-Ex-EX256	
Kirkland_Main-2939	Kirkland_Manholes-2336	342.09	Kirkland_Manholes-2341	327.28	137.3	10.78	8	Concrete	0.013	1,781	2	4	6	0.3	SM14-Ex-EX256	Drop Connection
Kirkland_Main-2940	Kirkland_Manholes-2349	361.19	Kirkland_Manholes-2335	323.22	315.1	12.05	8	Concrete	0.013	1,883	2	4	6	0.3	SM14-Ex-EX252	
Kirkland_Main-2941	Kirkland_Manholes-2335	323.22	Kirkland_Manholes-2334	323.19	8.2	0.4	8	Concrete	0.013	343	11	32	43	12.4	SM14-Ex-EX252	Drop Connection
Kirkland_Main-2942	Kirkland_Manholes-2343	315.2	Kirkland_Manholes-2348	314.6	208.7	0.29	8	Concrete	0.013	291	13	36	49	16.7	SM14-Ex-EX254	
Kirkland_Main-2944	Kirkland_Manholes-2915	422.99	Kirkland_Manholes-2916	416.17	267.2	2.55	8	PVC	0.01	1,126	4	16	19	1.7		
Kirkland_Main-2945	Kirkland_Manholes-2916	416.17	Kirkland_Manholes-2936	415.17	403.5	0.25	8	PVC	0.01	351	5	24	29	8.3		
Kirkland_Main-2946	Kirkland_Manholes-2917	449.84	Kirkland_Manholes-2918	440.81	194.6	4.64	8	PVC	0.01	1,519	1	4	5	0.3		
Kirkland_Main-2947	Kirkland_Manholes-2918	440.81	Kirkland_Manholes-2919	429.45	198.9	5.71	8	PVC	0.01	1,685	1	8	9	0.6		
Kirkland_Main-2948	Kirkland_Manholes-2919	429.45	Kirkland_Manholes-2915	422.99	217.1	2.98	8	PVC	0.01	1,216	3	12	15	1.2		
Kirkland_Main-2949	Kirkland_Manholes-2922	91.28	Kirkland_Manholes-2921	73.76	147.5	11.88	8	PVC	0.01	2,430	1	13	14	0.6		
Kirkland_Main-2951	Kirkland_Manholes-2923	92.6	Kirkland_Manholes-2922	91.28	84.5	1.56	8	PVC	0.01	881	0	4	4	0.5		
Kirkland_Main-2952	Kirkland_Manholes-2924	104.01	Kirkland_Manholes-2922	91.28	265	4.8	8	PVC	0.01	1,545	1	4	5	0.4		
Kirkland_Main-2953	Kirkland_Manholes-2423	267.38	Kirkland_Manholes-2421	253.02	328.6	4.37	8	PVC	0.01	1,474	3	4	7	0.5		
Kirkland_Main-2954	Kirkland_Manholes-2429	273.52	Kirkland_Manholes-2424	257.66	398.8	3.98	8	Concrete	0.013	1,082	29	95	124	11.5	SM14-Ex-EX260	
Kirkland_Main-2955	Kirkland_Manholes-2425	261.07	Kirkland_Manholes-2424	257.66	270.7	1.26	8	Concrete	0.013	609	179	211	389	64	SM2	
Kirkland_Main-2956	Kirkland_Manholes-2426	264.11	Kirkland_Manholes-2425	261.07	237.2	1.28	8	Concrete	0.013	614	173	191	364	59.2	SM2	
Kirkland_Main-2957	Kirkland_Manholes-2430	273.69	Kirkland_Manholes-2425	261.07	254.1	4.97	8	Concrete	0.013	1,209	5	16	21	1.7	SM14-Ex-EX286	
Kirkland_Main-2958	Kirkland_Manholes-2427	267.5	Kirkland_Manholes-2426	266.42	268.8	0.4	8	Concrete	0.013	343	172	187	359	104.6	SM2	Drop Connection
Kirkland_Main-2959	Kirkland_Manholes-2428	270.37	Kirkland_Manholes-2427	267.5	310.1	0.93	8	Concrete	0.013	522	120	159	279	53.4	SM2	
Kirkland_Main-2960	Kirkland_Manholes-2431	277.03	Kirkland_Manholes-2430	273.69	201.8	1.66	8	PVC	0.01	907	0	4	4	0.5		
Kirkland_Main-2961	Kirkland_Manholes-2433	263.87	Kirkland_Manholes-2434	245.33	172.7	10.73	8	Concrete	0.013	1,777	3	8	11	0.6	SM14-Ex-EX244	
Kirkland_Main-2962	Kirkland_Manholes-2434	245.33	Kirkland_Manholes-2437	244.43	228.6	0.39	8	Concrete	0.013	340	5	12	16	4.8	SM14-Ex-EX244	
Kirkland_Main-2963	Kirkland_Manholes-2437	244.43	Kirkland_Manholes-2436	225.88	256.7	7.23	8	Concrete	0.013	1,458	6	16	22	1.5	SM14-Ex-EX244	
Kirkland_Main-2964	Kirkland_Manholes-2514	400.04	Kirkland_Manholes-2517	387	217.1	6.01	8	PVC	0.01	1,728	9	12	21	1.2		
Kirkland_Main-2965	Kirkland_Manholes-2515	393.7	Kirkland_Manholes-2516	391.18	190.1	1.33	8	PVC	0.01	812	4	2	6	0.7		
Kirkland_Main-2966	Kirkland_Manholes-2516	391.18	Kirkland_Manholes-2517	387	163.7	2.55	8	PVC	0.01	1,127	5	5	10	0.9		
Kirkland_Main-2967	Kirkland_Manholes-2517	387	Kirkland_Manholes-2518	378.45	142.8	5.99	8	PVC	0.01	1,725	15	19	34	2		
Kirkland_Main-2968	Kirkland_Manholes-2518	378.45	Kirkland_Manholes-2524	346.56	373.5	8.54	8	PVC	0.01	2,060	18	21	39	1.9		
Kirkland_Main-2969	Kirkland_Manholes-2520	374.03	Kirkland_Manholes-2521	363.83	98.2	10.38	8	PVC	0.01	2,272	2	2	4	0.2		
Kirkland_Main-2970	Kirkland_Manholes-2435	226.37	Kirkland_Manholes-2436	225.88	121.8	0.4	8	Concrete	0.013	343	2	4	6	1.7	SM14-Ex-EX285	
Kirkland_Main-2971	Kirkland_Manholes-2436	225.88	Kirkland_Manholes-2438	209.72	279.9	5.77	8	Concrete	0.013	1,303	9	24	32	2.5	SM14-Ex-EX244	
Kirkland_Main-2972	Kirkland_Manholes-2438	209.72	Kirkland_Manholes-2441	205.09	260.5	1.78	8	Concrete	0.013	723	13	36	49	6.8	SM14-Ex-EX244	
Kirkland_Main-2973	Kirkland_Manholes-2439	217.92	Kirkland_Manholes-2438	209.72	117.3	6.99	8	Concrete	0.013	1,434	3	8	11	0.7	SM14-Ex-EX284	
Kirkland_Main-2974	Kirkland_Manholes-2440	242.45	Kirkland_Manholes-2439	217.92	136.9	17.92	6	Vitrified Clay	0.013	1,066	2	4	6	0.5	SM14-Ex-EX284	
Kirkland_Main-2975	Kirkland_Manholes-2441	205.09	Kirkland_Manholes-2442	204.35	67.9	1.09	8	Concrete	0.013	566	14	40	53	9.4	SM14-Ex-EX244	
Kirkland_Main-2977	Kirkland_Manholes-2992	396.35	Kirkland_Manholes-2991	395.79	171.2	0.33	8	PVC	0.01	403	2	20	22	5.4		
Kirkland_Main-2978	Kirkland_Manholes-2991	395.79	Kirkland_Manholes-1328	394.1	142.6	1.18	8	PVC	0.01	767	2	24	26	3.4		
Kirkland_Main-2979	Kirkland_Manholes-2737	259.86	Kirkland_Manholes-2310	256	91.2	4.23	8	PVC	0.01	1,451	3	9	12	0.8		
Kirkland_Main-2980	Kirkland_Manholes-2442	204.35	Kirkland_Manholes-2443	200	192.1	2.26	8	Concrete	0.013	816	14	44	58	7.1	SM14-Ex-EX244	
Kirkland_Main-2981	Kirkland_Manholes-2444	199.73	Kirkland_Manholes-2445	191.11	277	3.11	8	Concrete	0.013	957	18	64	82	8.6	SM14-Ex-EX244	
Kirkland_Main-2982	Kirkland_Manholes-2443	200	Kirkland_Manholes-2444	199.73	20.4	1.32	8	Concrete	0.013	623	15	48	63	10	SM14-Ex-EX244	
Kirkland_Main-2983	Kirkland_Manholes-2668	18.29	Kirkland_Manholes-2318	17.6	53.6	1.29	8	PVC	0.01	800	1	6	8	1		

Existing - Peak Hour Flow - Pipe Capacity Table

Label	Upstream Node	Upstream Invert Elevation (ft)	Downstream Node	Downstream Invert Elevation (ft)	Length (ft)	Slope (%)	Diameter (in)	Material	Manning's n	Design Capacity (gpm)	Domestic Flow (gpm)	I/I Flow (gpm)	Total Flow (gpm)	Percent Full (%)	CIP No.	Notes
Kirkland_Main-2984	Kirkland_Manholes-2320	18	Kirkland_Manholes-2319	17.7	261.8	0.11	21	PVC	0.01	3,129	102	273	375	12		
Kirkland_Main-2985	Kirkland_Manholes-2321	18.2	Kirkland_Manholes-2320	18	193.7	0.1	21	PVC	0.01	2,971	97	214	312	10.5		
Kirkland_Main-2986	Kirkland_Manholes-2303	195.57	Kirkland_Manholes-2302	194.37	30.3	3.96	8	Concrete	0.013	1,079	549	1,470	2,019	187.1	SM2	
Kirkland_Main-2987	Kirkland_Manholes-2302	194.37	Kirkland_Manholes-2304	192.91	51.2	2.85	12	PVC	0.01	3,510	549	1,474	2,023	57.7		
Kirkland_Main-2988	Kirkland_Manholes-2285	419.89	Kirkland_Manholes-2284	417.52	64.2	3.69	8	Concrete	0.013	1,042	204	675	879	84.4	SM14-Ex-EX248	
Kirkland_Main-2989	Kirkland_Manholes-2284	417.52	Kirkland_Manholes-2282	401.71	231.8	6.82	8	Concrete	0.013	1,416	204	679	884	62.4	SM14-Ex-EX248	
Kirkland_Main-2990	Kirkland_Manholes-2263	374.13	Kirkland_Manholes-2262	311.78	761.4	8.19	8	sbestos Ceme	0.011	1,834	232	842	1,074	58.5	SM14-Ex-EX248	
Kirkland_Main-2991	Kirkland_Manholes-2669	379.65	Kirkland_Manholes-2290	372.36	83.4	8.74	8	PVC	0.01	2,084	4	4	8	0.4		
Kirkland_Main-2992	Kirkland_Manholes-2290	372.36	Kirkland_Manholes-2291	367.48	64.2	7.6	8	PVC	0.01	1,944	4	8	12	0.6		
Kirkland_Main-2993	Kirkland_Manholes-2291	367.48	Kirkland_Manholes-2292	366.54	71.9	1.31	8	PVC	0.01	806	5	12	17	2.1		
Kirkland_Main-2994	Kirkland_Manholes-2292	366.54	Kirkland_Manholes-2293	362.58	154	2.57	8	PVC	0.01	1,131	5	16	21	1.8		
Kirkland_Main-2995	Kirkland_Manholes-2670	399.73	Kirkland_Manholes-2298	382.52	120.1	14.33	8	PVC	0.01	2,669	3	8	11	0.4		Drop Connection
Kirkland_Main-2997	Kirkland_Manholes-2673	372.3	Kirkland_Manholes-2675	350.82	245.7	8.74	8	Concrete	0.013	1,603	1	4	5	0.3	SM14-Ex-EX208	
Kirkland_Main-2998	Kirkland_Manholes-2709	292.14	Kirkland_Manholes-2708	281.32	58.6	18.46	8	PVC	0.01	3,029	1	16	17	0.6		
Kirkland_Main-2999	Kirkland_Manholes-2708	281.32	Kirkland_Manholes-2707	271.62	125.5	7.73	8	PVC	0.01	1,960	1	20	21	1.1		
Kirkland_Main-3000	Kirkland_Manholes-2711	316.09	Kirkland_Manholes-2709	292.14	170	14.09	8	PVC	0.01	2,647	1	8	9	0.4		
Kirkland_Main-3001	Kirkland_Manholes-2707	271.62	Kirkland_Manholes-2704	250.11	214	10.05	8	PVC	0.01	2,235	2	24	26	1.2		
Kirkland_Main-3002	Kirkland_Manholes-2703	250.19	Kirkland_Manholes-2704	250.11	401.9	0.02	8	PVC	0.01	99	4	16	20	20		
Kirkland_Main-3003	Kirkland_Manholes-2712	326.54	Kirkland_Manholes-2711	316.09	154.3	6.77	8	PVC	0.01	1,835	1	4	5	0.3		
Kirkland_Main-3005	Kirkland_Manholes-2714	316.79	Kirkland_Manholes-2713	280.32	397.8	9.17	8	Concrete	0.013	1,642	2	4	6	0.4	SM14-Ex-EX204	
Kirkland_Main-3006	Kirkland_Manholes-2713	280.32	Kirkland_Manholes-2702	256.62	323.4	7.33	8	Concrete	0.013	1,468	4	8	12	0.8	SM14-Ex-EX204	
Kirkland_Main-3008	Kirkland_Manholes-2721	21.2	Kirkland_Manholes-2722	21	44.5	0.45	12	Ductile Iron	0.012	1,161	76	43	118	10.2	SM14-Ex-EX289	
Kirkland_Main-3009	Kirkland_Manholes-2724	25.33	Kirkland_Manholes-2723	21.5	122.9	3.12	6	Ductile Iron	0.012	482	11	6	17	3.5	SM14-Ex-EX288	
Kirkland_Main-3010	Kirkland_Manholes-2723	21.5	Kirkland_Manholes-2722	21	70.9	0.7	6	Ductile Iron	0.012	229	12	12	24	10.6	SM14-Ex-EX288	
Kirkland_Main-3011	Kirkland_Manholes-2727	13	Kirkland_Manholes-2726	12.39	121.7	0.5	18	Concrete	0.013	3,338	227	589	816	24.5	SM14-Ex-EX289	
Kirkland_Main-3012	Kirkland_Manholes-2729	13.77	Kirkland_Manholes-2727	13	208.7	0.37	18	Concrete	0.013	2,864	226	583	809	28.2	SM14-Ex-EX289	
Kirkland_Main-3013	Kirkland_Manholes-2730	14.43	Kirkland_Manholes-2728	13.83	161.6	0.37	18	Concrete	0.013	2,873	224	571	795	27.7	SM14-Ex-EX289	
Kirkland_Main-3014	Kirkland_Manholes-2728	13.83	Kirkland_Manholes-2729	13.77	16.5	0.36	18	Concrete	0.013	2,843	226	577	803	28.2	SM14-Ex-EX289	
Kirkland_Main-3015	Kirkland_Manholes-2731	15.6	Kirkland_Manholes-2977	14.89	193.8	0.37	18	Concrete	0.013	2,853	223	553	776	27.2	SM14-Ex-EX289	
Kirkland_Main-3016	Kirkland_Manholes-2732	15.71	Kirkland_Manholes-2731	15.6	29.6	0.37	18	Ductile Iron	0.012	3,115	221	547	768	24.6	SM14-Ex-EX289	
Kirkland_Main-3017	Kirkland_Manholes-2733	16.02	Kirkland_Manholes-2732	15.71	84.3	0.37	18	PVC	0.01	3,716	218	541	758	20.4	SM14-Ex-EX289	
Kirkland_Main-3018	Kirkland_Manholes-2735	16.81	Kirkland_Manholes-2733	16.02	214.5	0.37	18	Concrete	0.013	2,861	217	534	751	26.3	SM14-Ex-EX289	
Kirkland_Main-3019	Kirkland_Manholes-2734	17.15	Kirkland_Manholes-2735	16.81	92.8	0.37	18	Concrete	0.013	2,854	216	528	744	26.1	SM14-Ex-EX289	
Kirkland_Main-3020	Kirkland_Manholes-2736	17.76	Kirkland_Manholes-2734	17.15	164.5	0.37	18	Concrete	0.013	2,871	216	522	738	25.7	SM14-Ex-EX289	
Kirkland_Main-3021	Kirkland_Manholes-2741	83.04	Kirkland_Manholes-2739	73.09	180.1	5.53	8	PVC	0.01	1,657	5	18	24	1.4		
Kirkland_Main-3022	Kirkland_Manholes-2740	73.45	Kirkland_Manholes-2739	73.09	167.3	0.22	8	PVC	0.01	327	0	6	6	1.9		
Kirkland_Main-3023	Kirkland_Manholes-2739	73.09	Kirkland_Manholes-2203	62.94	47.2	21.5	8	PVC	0.01	3,269	12	55	67	2		
Kirkland_Main-3024	Kirkland_Manholes-2744	119.06	Kirkland_Manholes-2739	73.09	200.2	22.96	8	PVC	0.01	3,378	7	24	31	0.9		
Kirkland_Main-3025	Kirkland_Manholes-2745	129.7	Kirkland_Manholes-2744	119.06	80.2	13.27	8	PVC	0.01	2,569	0	6	6	0.2		
Kirkland_Main-3026	Kirkland_Manholes-2746	121.99	Kirkland_Manholes-2744	119.06	88.8	3.3	8	PVC	0.01	1,280	0	12	12	0.9		
Kirkland_Main-3027	Kirkland_Manholes-2747	133.27	Kirkland_Manholes-2746	121.99	59.4	19	8	PVC	0.01	3,073	0	6	6	0.2		
Kirkland_Main-3028	Kirkland_Manholes-2742	91.54	Kirkland_Manholes-2741	83.04	69.2	12.29	8	PVC	0.01	2,471	5	12	18	0.7		
Kirkland_Main-3029	Kirkland_Manholes-2743	92.6	Kirkland_Manholes-2742	91.54	64.4	1.65	8	PVC	0.01	904	5	6	12	1.3		
Kirkland_Main-3030	Kirkland_Manholes-2748	105.07	Kirkland_Manholes-2749	94.38	144.8	7.38	8	PVC	0.01	1,916	0	6	6	0.3		
Kirkland_Main-3031	Kirkland_Manholes-2749	94.38	Kirkland_Manholes-2880	81.72	189.8	6.67	8	PVC	0.01	1,821	24	18	43	2.3		
Kirkland_Main-3032	Kirkland_Manholes-2756	10.03	Kirkland_Manholes-2754	9.95	319.1	0.03	18	Ductile Iron	0.012	809	506	1,841	2,649	327.6	SM14-Ex-EX10	
Kirkland_Main-3033	Kirkland_Manholes-2757	10.95	Kirkland_Manholes-2756	10.03	146.2	0.63	18	PVC	0.01	4,861	506	1,837	2,645	54.4	SM14-Ex-EX10	
Kirkland_Main-3036	Kirkland_Manholes-2765	13.19	Kirkland_Manholes-2763	13.15	315.8	0.01	18	Ductile Iron	0.012	575	445	1,547	2,293	398.9	SM14-Ex-EX10	
Kirkland_Main-3037	Kirkland_Manholes-2766	361.12	Kirkland_Manholes-2548	359.75	342.1	0.4	8	PVC	0.01	446	1	4	5	1		
Kirkland_Main-3038	Kirkland_Manholes-397	247.33	Kirkland_Manholes-376	239.8	215.8	3.49	8	PVC	0.01	1,317	55	226	282	21.4		
Kirkland_Main-3039	Kirkland_Manholes-2769	260.32	Kirkland_Manholes-1077	252.59	364.2	2.12	8	PVC	0.01	1,027	3	8	11	1		
Kirkland_Main-3044	Kirkland_Manholes-2275	411.72	Kirkland_Manholes-2276	410.45	52.8	2.4	8	PVC	0.01	1,093	1	4	5	0.4		
Kirkland_Main-3045	Kirkland_Manholes-2771	320.53	Kirkland_Manholes-2772	308.23	258.2	4.76	8	PVC	0.01	1,539	29	88	117	7.6		
Kirkland_Main-3046	Kirkland_Manholes-2776	334.45	Kirkland_Manholes-2775	332.7	391.2	0.45	8	PVC	0.01	472	29	81	110	23.3		
Kirkland_Main-3047	Kirkland_Manholes-2775	332.7	Kirkland_Manholes-2774	330.08	382.8	0.68	8	PVC	0.01	583	29	84	112	19.3		
Kirkland_Main-3048	Kirkland_Manholes-2774	330.08	Kirkland_Manholes-2771	320.53	310.5	3.08	8	PVC	0.01	1,237	29	86	115	9.3		
Kirkland_Main-3049	Kirkland_Manholes-2782	326.16	Kirkland_Manholes-2781	293.52	273.1	11.95	8	PVC	0.01	2,438	0	3	3	0.1		
Kirkland_Main-3050	Kirkland_Manholes-2781	293.52	Kirkland_Manholes-2780	291.73	199	0.9	8	PVC	0.01	669	19	5	24	3.6		
Kirkland_Main-3051	Kirkland_Manholes-2780	291.73	Kirkland_Manholes-2779	288.37	73	4.6	8	PVC	0.01	1,512	19	8	27	1.8		
Kirkland_Main-3052	Kirkland_Manholes-2779	288.37	Kirkland_Manholes-2778	255.64	255.5	12.81	8	PVC	0.01	2,524	19	11	30	1.2		
Kirkland_Main-3053	Kirkland_Manholes-2777	256.44	Kirkland_Manholes-2778	255.64	115.8	0.69	8	PVC	0.01	586	0	3	3	0.5		
Kirkland_Main-3054	Kirkland_Manholes-2785	259.34	Kirkland_Manholes-2786	258.1	92.6	1.34	8	PVC	0.01	816	7	48	55	6.8		

Existing - Peak Hour Flow - Pipe Capacity Table

Label	Upstream Node	Upstream Invert Elevation (ft)	Downstream Node	Downstream Invert Elevation (ft)	Length (ft)	Slope (%)	Diameter (in)	Material	Manning's n	Design Capacity (gpm)	Domestic Flow (gpm)	I/I Flow (gpm)	Total Flow (gpm)	Percent Full (%)	CIP No.	Notes
Kirkland_Main-3055	Kirkland_Manholes-2784	262.56	Kirkland_Manholes-2785	259.34	108.2	2.97	8	PVC	0.01	1,216	7	44	50	4.1		
Kirkland_Main-3057	Kirkland_Manholes-2787	252.17	Kirkland_Manholes-2788	251.6	73	0.78	8	Concrete	0.013	479	14	87	102	21.2	SM14-Ex-EX313	
Kirkland_Main-3059	Kirkland_Manholes-2798	192.18	Kirkland_Manholes-2797	190.87	110.6	1.18	8	Concrete	0.013	590	1	4	5	0.9	SM14-Ex-EX296	
Kirkland_Main-3060	Kirkland_Manholes-2797	190.87	Kirkland_Manholes-2796	185.45	211.8	2.56	8	Concrete	0.013	868	5	16	21	2.5	SM14-Ex-EX296	
Kirkland_Main-3061	Kirkland_Manholes-2799	233.81	Kirkland_Manholes-2800	221.07	125.6	10.15	8	Concrete	0.013	1,728	1	4	5	0.3	SM14-Ex-EX302	
Kirkland_Main-3062	Kirkland_Manholes-2800	221.07	Kirkland_Manholes-2797	190.87	260	11.62	8	Concrete	0.013	1,848	2	8	10	0.6	SM14-Ex-EX302	
Kirkland_Main-3063	Kirkland_Manholes-2802	238.36	O-39	228.33	111.4	9	8	PVC	0.01	2,116	19	22	41	1.9		
Kirkland_Main-3064	Kirkland_Manholes-2810	44.75	Kirkland_Manholes-2809	44.5	62.2	0.4	8	Concrete	0.013	343	22	91	114	33.1	SM14-Ex-EX316	Drop Connection
Kirkland_Main-3065	Kirkland_Manholes-2808	55.6	Kirkland_Manholes-2807	47.79	63.2	12.36	8	Concrete	0.013	1,907	0	12	12	0.6	SM14-Ex-EX317	
Kirkland_Main-3066	Kirkland_Manholes-2807	47.79	Kirkland_Manholes-2810	44.75	258.6	1.18	8	Concrete	0.013	588	1	79	80	13.6	SM14-Ex-EX316	
Kirkland_Main-3067	Kirkland_Manholes-2806	53.14	Kirkland_Manholes-2807	47.79	321.9	1.66	8	Concrete	0.013	699	0	61	61	8.7	SM14-Ex-EX316	
Kirkland_Main-3068	Kirkland_Manholes-2805	68.41	Kirkland_Manholes-2806	53.14	319.8	4.78	8	Concrete	0.013	1,185	0	55	55	4.6	SM14-Ex-EX316	
Kirkland_Main-3069	Kirkland_Manholes-2811	70.36	Kirkland_Manholes-2808	55.6	132.6	11.13	6	Concrete	0.013	840	0	6	6	0.7	SM14-Ex-EX317	
Kirkland_Main-3070	Kirkland_Manholes-2814	79.68	Kirkland_Manholes-2805	68.41	70.6	15.96	6	Concrete	0.013	1,006	0	6	6	0.6	SM14-Ex-EX318	
Kirkland_Main-3071	Kirkland_Manholes-2815	71.41	Kirkland_Manholes-2805	68.41	115.4	2.6	8	Concrete	0.013	874	0	18	18	2.1	SM14-Ex-EX318	
Kirkland_Main-3072	Kirkland_Manholes-2812	81.42	Kirkland_Manholes-2815	71.41	284.3	3.52	8	Concrete	0.013	1,018	0	12	12	1.2	SM14-Ex-EX318	
Kirkland_Main-3073	Kirkland_Manholes-2813	84.17	Kirkland_Manholes-2812	81.42	272.3	1.01	8	Concrete	0.013	545	0	6	6	1.1	SM14-Ex-EX318	
Kirkland_Main-3074	Kirkland_Manholes-2816	45.4	Kirkland_Manholes-2810	44.75	163.3	0.4	8	PVC	0.01	446	1	6	7	1.6		
Kirkland_Main-3075	Kirkland_Manholes-2822	57.68	Kirkland_Manholes-2821	56.89	105.9	0.75	8	PVC	0.01	609	29	6	35	5.7		
Kirkland_Main-3076	Kirkland_Manholes-2821	56.89	Kirkland_Manholes-2820	55.04	95.1	1.94	8	PVC	0.01	983	30	12	42	4.3		
Kirkland_Main-3077	Kirkland_Manholes-2820	55.04	Kirkland_Manholes-2819	48.42	258.4	2.56	8	PVC	0.01	1,128	32	18	50	4.4		
Kirkland_Main-3078	Kirkland_Manholes-2819	48.42	Kirkland_Manholes-2817	44.74	95	3.87	8	PVC	0.01	1,388	32	24	57	4.1		
Kirkland_Main-3079	Kirkland_Manholes-2818	48.57	Kirkland_Manholes-2817	44.74	127	3.01	8	PVC	0.01	1,224	3	6	9	0.7		
Kirkland_Main-3080	Kirkland_Manholes-2817	44.74	Kirkland_Manholes-2823	34.33	329.7	3.16	8	PVC	0.01	1,253	35	36	72	5.7		
Kirkland_Main-3081	Kirkland_Manholes-2827	39.5	Kirkland_Manholes-2826	38.6	407	0.22	12	Concrete	0.013	750	220	590	810	108	SM14-Ex-EX319	Drop Connection
Kirkland_Main-3082	Kirkland_Manholes-2826	36.35	Kirkland_Manholes-2823	34.33	324.1	0.62	12	Concrete	0.013	1,261	228	596	824	65.3	SM14-Ex-EX319	
Kirkland_Main-3083	Kirkland_Manholes-2823	34.33	Kirkland_Manholes-2824	33.64	78.4	0.88	12	Concrete	0.013	1,500	263	638	902	60.1	SM14-Ex-EX319	
Kirkland_Main-3084	Kirkland_Manholes-2824	33.64	Kirkland_Manholes-2825	33	93.6	0.69	12	Concrete	0.013	1,325	264	645	908	68.5	SM14-Ex-EX319	
Kirkland_Main-3085	Kirkland_Manholes-2830	52.24	Kirkland_Manholes-2831	43.6	77.9	11.1	8	PVC	0.01	2,349	6	6	83	3.5		
Kirkland_Main-3088	Kirkland_Manholes-2831	43.6	Kirkland_Manholes-2829	40.2	467.6	0.73	12	Concrete	0.013	1,363	152	401	625	45.9	SM14-Ex-EX309	
Kirkland_Main-3089	Kirkland_Manholes-2825	33	Kirkland_Manholes-2832	30.86	94.7	2.26	12	Concrete	0.013	2,403	264	651	914	38	SM14-Ex-EX319	
Kirkland_Main-3090	Kirkland_Manholes-2829	40.2	Kirkland_Manholes-2832	30.86	260.5	3.59	12	Concrete	0.013	3,028	152	407	631	20.9	SM14-Ex-EX309	
Kirkland_Main-3091	Kirkland_Manholes-2828	34.38	Kirkland_Manholes-2832	30.86	239.8	1.47	8	PVC	0.01	854	21	6	27	3.1		
Kirkland_Main-3092	Kirkland_Manholes-2832	30.86	Kirkland_Manholes-2833	29.99	303.3	0.29	15	Concrete	0.013	1,553	437	1,070	1,579	101.7	SM14-Ex-EX309	
Kirkland_Main-3093	Kirkland_Manholes-2839	98.83	Kirkland_Manholes-2840	90.84	75.4	10.6	8	PVC	0.01	2,295	2	6	8	0.3		
Kirkland_Main-3094	Kirkland_Manholes-2841	31.53	Kirkland_Manholes-2842	26.9	41.3	11.2	8	Concrete	0.013	1,815	4	18	22	1.2	SM14-Ex-EX310	
Kirkland_Main-3095	Kirkland_Manholes-2843	16.05	YARROW POINT_WETWELL	6	32.1	31.31	8	Ductile Iron	0.012	3,288	11	47	58	1.8	SM14-Ex-EX315	
Kirkland_Main-3096	Kirkland_Manholes-2847	24.39	Kirkland_Manholes-2854	20.28	103.2	3.98	8	Ductile Iron	0.012	1,172	0	5	5	0.4	SM14-Ex-EX315	
Kirkland_Main-3097	Kirkland_Manholes-2854	20.28	Kirkland_Manholes-2855	19.82	135	0.34	8	Ductile Iron	0.012	343	0	9	9	2.7	SM14-Ex-EX315	
Kirkland_Main-3098	Kirkland_Manholes-2855	19.82	Kirkland_Manholes-2846	17.72	172.2	1.22	8	Ductile Iron	0.012	649	0	14	14	2.2	SM14-Ex-EX315	
Kirkland_Main-3099	Kirkland_Manholes-2846	17.72	Kirkland_Manholes-2843	16.05	133.2	1.25	8	Ductile Iron	0.012	658	0	19	19	2.8	SM14-Ex-EX315	
Kirkland_Main-3100	Kirkland_Manholes-2845	16.72	Kirkland_Manholes-2843	16.05	68.4	0.97	8	Ductile Iron	0.012	580	11	19	30	5.2	SM14-Ex-EX315	
Kirkland_Main-3102	Kirkland_Manholes-2844	27.14	Kirkland_Manholes-2843	26.59	137.5	0.4	8	Ductile Iron	0.012	372	0	5	5	1.3	SM14-Ex-EX315	Drop Connection
Kirkland_Main-3104	Kirkland_Manholes-2809	42.91	Kirkland_Manholes-2834	37.62	317.9	1.66	8	Concrete	0.013	700	25	97	122	17.5	SM14-Ex-EX316	
Kirkland_Main-3105	Kirkland_Manholes-2836	60.97	Kirkland_Manholes-2835	50.93	162.4	6.18	8	PVC	0.01	1,753	6	18	24	1.4		
Kirkland_Main-3106	Kirkland_Manholes-2835	50.93	Kirkland_Manholes-2834	37.62	47.5	28.02	8	PVC	0.01	3,732	6	24	31	0.8		
Kirkland_Main-3108	Kirkland_Manholes-2862	89.88	Kirkland_Manholes-2863	49.4	272.9	14.83	8	PVC	0.01	2,716	7	9	16	0.6		
Kirkland_Main-3109	Kirkland_Manholes-2861	109.7	Kirkland_Manholes-2862	89.88	239.2	8.29	8	PVC	0.01	2,030	5	6	11	0.5		
Kirkland_Main-3110	Kirkland_Manholes-2860	120.82	Kirkland_Manholes-2861	109.7	223.4	4.98	8	PVC	0.01	1,573	2	3	5	0.3		
Kirkland_Main-3115	Kirkland_Manholes-2883	268.55	Kirkland_Manholes-2876	267.92	60.1	1.05	8	PVC	0.01	722	1	8	9	1.3		
Kirkland_Main-3116	Kirkland_Manholes-2884	269.34	Kirkland_Manholes-2883	268.55	63.9	1.24	8	PVC	0.01	784	1	4	5	0.6		
Kirkland_Main-3118	Kirkland_Manholes-2548	359.75	Kirkland_Manholes-2891	359.09	165.1	0.4	8	PVC	0.01	448	8	24	32	7.2		
Kirkland_Main-3119	Kirkland_Manholes-2891	359.09	Kirkland_Manholes-2561	358.82	66.3	0.4	8	PVC	0.01	446	9	28	37	8.2		
Kirkland_Main-3121	Kirkland_Manholes-2893	432.24	Kirkland_Manholes-1991	431.18	280.1	0.38	8	PVC	0.01	434	2	4	6	1.5		
Kirkland_Main-3122	Kirkland_Manholes-2894	306.1	Kirkland_Manholes-2895	306	25.4	0.4	8	PVC	0.01	446	2	16	18	4		
Kirkland_Main-3123	Kirkland_Manholes-2895	306	Kirkland_Manholes-2896	304.88	150.3	0.75	8	PVC	0.01	609	2	20	22	3.6		
Kirkland_Main-3124	Kirkland_Manholes-2896	304.88	Kirkland_Manholes-2897	303.8	169.5	0.64	8	PVC	0.01	563	3	24	27	4.8		
Kirkland_Main-3125	Kirkland_Manholes-2898	307.58	Kirkland_Manholes-2897	303.8	40	9.44	8	PVC	0.01	2,166	1	4	5	0.2		
Kirkland_Main-3126	Kirkland_Manholes-2897	303.8	Kirkland_Manholes-2899	303.26	125.6	0.43	8	PVC	0.01	462	4	32	36	7.8		
Kirkland_Main-3127	Kirkland_Manholes-2899	303.26	Kirkland_Manholes-2900	302.3	244.9	0.39	8	PVC	0.01	441	5	36	41	9.3		
Kirkland_Main-3128	Kirkland_Manholes-882	297.25	Kirkland_Manholes-345	279.43	305.8	5.83	8	PVC	0.01	1,702	3	4	7	0.4		
Kirkland_Main-3129	Kirkland_Manholes-2901	294.77	Kirkland_Manholes-883	294.42	87	0.4	8	PVC	0.01	446	1	16	17	3.8		

Existing - Peak Hour Flow - Pipe Capacity Table

Label	Upstream Node	Upstream Invert Elevation (ft)	Downstream Node	Downstream Invert Elevation (ft)	Length (ft)	Slope (%)	Diameter (in)	Material	Manning's n	Design Capacity (gpm)	Domestic Flow (gpm)	I/I Flow (gpm)	Total Flow (gpm)	Percent Full (%)	CIP No.	Notes
Kirkland_Main-3130	Kirkland_Manholes-883	294.42	Kirkland_Manholes-906	293.01	64.9	2.17	8	PVC	0.01	1,039	4	36	40	3.8		
Kirkland_Main-3131	Kirkland_Manholes-2902	301.02	Kirkland_Manholes-883	294.42	322.3	2.05	8	PVC	0.01	1,009	3	16	19	1.9		
Kirkland_Main-3132	Kirkland_Manholes-2903	301.35	Kirkland_Manholes-2902	301.02	151.1	0.22	8	PVC	0.01	329	2	12	14	4.4		
Kirkland_Main-3133	Kirkland_Manholes-2905	302.8	Kirkland_Manholes-2904	301.39	65.9	2.14	8	PVC	0.01	1,031	1	4	5	0.5		
Kirkland_Main-3134	Kirkland_Manholes-2904	301.39	Kirkland_Manholes-2903	301.35	153.8	0.03	8	PVC	0.01	114	1	8	9	8.1		
Kirkland_Main-3135	Kirkland_Manholes-2913	474.42	Kirkland_Manholes-1391	471.35	128.8	2.38	8	PVC	0.01	1,088	1	8	9	0.8		
Kirkland_Main-3136	Kirkland_Manholes-2906	405.37	Kirkland_Manholes-2907	402.62	299.9	0.92	8	PVC	0.01	675	1	21	22	3.3		
Kirkland_Main-3137	Kirkland_Manholes-2907	402.62	Kirkland_Manholes-2908	397.79	295.5	1.63	8	PVC	0.01	901	2	23	25	2.8		
Kirkland_Main-3138	Kirkland_Manholes-2908	397.79	Kirkland_Manholes-2532	395.91	85.9	2.19	8	PVC	0.01	1,043	2	26	27	2.6		
Kirkland_Main-3139	Kirkland_Manholes-2910	412.56	Kirkland_Manholes-2017	412	24.7	2.27	8	PVC	0.01	1,062	4	16	19	1.8		
Kirkland_Main-3140	Kirkland_Manholes-2911	414.42	Kirkland_Manholes-2910	412.56	288.8	0.64	8	PVC	0.01	566	3	12	15	2.6		
Kirkland_Main-3141	Kirkland_Manholes-2909	423.03	Kirkland_Manholes-2912	418.07	296	1.68	8	PVC	0.01	913	1	4	5	0.6		
Kirkland_Main-3142	Kirkland_Manholes-2912	418.07	Kirkland_Manholes-2911	414.42	285.6	1.28	8	PVC	0.01	797	3	8	11	1.3		
Kirkland_Main-3143	Kirkland_Manholes-2914	478.18	Kirkland_Manholes-2913	474.42	305.5	1.23	8	PVC	0.01	782	1	4	5	0.6		
Kirkland_Main-3144	Kirkland_Manholes-2036	452.58	Kirkland_Manholes-1216	443.89	347.4	2.5	8	Concrete	0.013	858	123	318	441	51.4	SM14-Ex-EX264	
Kirkland_Main-3145	Kirkland_Manholes-1216	443.89	Kirkland_Manholes-2048	442.51	28.4	4.86	8	Concrete	0.013	1,195	125	326	451	37.7	SM14-Ex-EX264	
Kirkland_Main-3146	Kirkland_Manholes-1719	46.02	Kirkland_Manholes-2935	44.9	241.2	0.46	8	PVC	0.01	480	71	58	128	26.7	SM14-Ex-EX165	
Kirkland_Main-3147	Kirkland_Manholes-2935	44.9	Kirkland_Manholes-1741	41.4	292.3	1.2	8	Concrete	0.013	594	71	66	137	23	SM14-Ex-EX165	
Kirkland_Main-3150	Kirkland_Manholes-733	35.72	Kirkland_Manholes-758	27.19	290.4	2.94	18	PVC	0.01	10,503	486	1,745	2,232	21.3		
Kirkland_Main-3151	Kirkland_Manholes-758	27.19	Kirkland_Manholes-734	25.7	118.9	1.25	18	PVC	0.01	6,865	486	1,754	2,240	32.6		
Kirkland_Main-3152	Kirkland_Manholes-1689	43.75	Kirkland_Manholes-2927	38.62	107.6	4.77	8	Concrete	0.013	1,184	46	103	149	12.6	SM14-Ex-EX161	
Kirkland_Main-3153	Kirkland_Manholes-2927	38.62	Kirkland_Manholes-733	35.72	20.9	13.88	8	PVC	0.01	2,627	46	111	157	6		
Kirkland_Main-3154	Kirkland_Manholes-2928	60.36	Kirkland_Manholes-730	57.26	71.9	4.31	18	PVC	0.01	12,722	141	552	692	5.4		
Kirkland_Main-3155	Kirkland_Manholes-1372	427.9	Kirkland_Manholes-2936	415.17	236.6	5.38	8	Concrete	0.013	1,258	46	143	189	15	SM14-Ex-EX218	
Kirkland_Main-3156	Kirkland_Manholes-2936	415.17	Kirkland_Manholes-1351	415.08	21.5	0.4	8	PVC	0.01	446	52	171	223	50		Drop Connection
Kirkland_Main-3157	Kirkland_Manholes-2937	243.36	Kirkland_Manholes-2938	237.72	156	3.61	8	PVC	0.01	1,340	3	4	7	0.5		
Kirkland_Main-3158	Kirkland_Manholes-2938	237.72	Kirkland_Manholes-1313	237.26	115.6	0.4	8	PVC	0.01	446	3	9	12	2.7		Drop Connection
Kirkland_Main-3159	Kirkland_Manholes-2939	317.33	Kirkland_Manholes-2887	302.33	186.7	8.03	8	PVC	0.01	1,999	2	12	14	0.7		
Kirkland_Main-3161	Kirkland_Manholes-2940	472.26	Kirkland_Manholes-564	469.28	203.6	1.46	8	PVC	0.01	853	0	4	4	0.5		
Kirkland_Main-3162	Kirkland_Manholes-2943	249.65	Kirkland_Manholes-1876	247.77	195.1	0.96	8	PVC	0.01	692	0	8	8	1.1		
Kirkland_Main-3163	Kirkland_Manholes-2947	393.38	Kirkland_Manholes-2946	380.26	237.2	5.53	8	PVC	0.01	1,658	1	4	5	0.3		
Kirkland_Main-3164	Kirkland_Manholes-2946	380.26	Kirkland_Manholes-2945	367.86	240.8	5.15	8	PVC	0.01	1,600	6	20	26	1.6		
Kirkland_Main-3165	Kirkland_Manholes-2945	367.86	Kirkland_Manholes-2948	345.5	368	6.08	8	PVC	0.01	1,738	6	24	30	1.7		
Kirkland_Main-3166	Kirkland_Manholes-2948	345.5	Kirkland_Manholes-1933	343.68	135.8	1.34	8	PVC	0.01	816	6	28	34	4.2		
Kirkland_Main-3167	Kirkland_Manholes-2171	166.42	Kirkland_Manholes-1107	164.79	299.5	0.54	8	Concrete	0.013	400	0	4	4	1	SM14-Ex-EX21	
Kirkland_Main-3168	Kirkland_Manholes-2942	127.29	Kirkland_Manholes-2941	110.18	161.6	10.59	8	PVC	0.01	2,294	2	4	6	0.3		
Kirkland_Main-3169	Kirkland_Manholes-80	110.33	Kirkland_Manholes-2941	110.18	10	1.51	8	PVC	0.01	866	3	4	7	0.8		
Kirkland_Main-3170	Kirkland_Manholes-2941	110.18	Kirkland_Manholes-144	88.96	389.8	5.44	8	PVC	0.01	1,645	4	13	17	1		
Kirkland_Main-3171	Kirkland_Manholes-2949	387.42	Kirkland_Manholes-2946	380.26	393.8	1.82	8	PVC	0.01	951	4	12	15	1.6		
Kirkland_Main-3172	Kirkland_Manholes-2950	396.31	Kirkland_Manholes-2949	387.42	98.6	9.02	8	PVC	0.01	2,117	3	8	11	0.5		
Kirkland_Main-3173	Kirkland_Manholes-2951	398.98	Kirkland_Manholes-2950	396.31	142	1.88	8	PVC	0.01	967	1	4	5	0.5		
Kirkland_Main-3174	Kirkland_Manholes-2952	137.34	Kirkland_Manholes-2509	126.48	113.7	9.55	8	PVC	0.01	2,179	1	6	8	0.3		
Kirkland_Main-3175	Kirkland_Manholes-1035	182.7	Kirkland_Manholes-2955	181.46	188.6	0.66	8	PVC	0.01	572	13	51	64	11.2		
Kirkland_Main-3176	Kirkland_Manholes-2955	181.46	Kirkland_Manholes-1038	180.54	146.6	0.63	8	PVC	0.01	559	17	64	81	14.5		
Kirkland_Main-3177	Kirkland_Manholes-2954	183.8	Kirkland_Manholes-2953	182.9	158.6	0.57	8	PVC	0.01	531	1	4	5	1		
Kirkland_Main-3178	Kirkland_Manholes-2953	182.9	Kirkland_Manholes-2955	181.46	297.7	0.48	8	PVC	0.01	490	3	9	12	2.4		
Kirkland_Main-3179	Kirkland_Manholes-2956	306.62	Kirkland_Manholes-876	301.25	262.2	2.05	8	PVC	0.01	1,009	1	16	17	1.7		
Kirkland_Main-3180	Kirkland_Manholes-2958	17.19	WAVERLY_WETWELL	0	45.5	37.82	12	PVC	0.01	12,784	38	283	321	2.5		WW Influent Pipe
Kirkland_Main-3181	Kirkland_Manholes-1622	253.11	Kirkland_Manholes-528	238.38	149.4	9.86	8	Concrete	0.013	1,703	213	834	1,048	61.5	SM7	
Kirkland_Main-3182	Kirkland_Manholes-528	238.38	Kirkland_Manholes-1634	223.49	152.1	9.79	8	Concrete	0.013	1,697	216	838	1,054	62.1	SM7	
Kirkland_Main-3183	Kirkland_Manholes-2971	508.46	Kirkland_Manholes-2972	508.32	249.3	0.06	8	PVC	0.01	167	0	4	4	2.4		
Kirkland_Main-3185	Kirkland_Manholes-2960	235.09	Kirkland_Manholes-334	218.68	321.1	5.11	8	PVC	0.01	1,594	2	4	6	0.4		
Kirkland_Main-3186	Kirkland_Manholes-2961	466.63	Kirkland_Manholes-2030	465.11	267.6	0.57	8	PVC	0.01	531	1	4	5	0.9		
Kirkland_Main-3187	Kirkland_Manholes-2963	352.22	Kirkland_Manholes-2962	351.81	165.5	0.25	8	PVC	0.01	351	1	4	5	1.4		
Kirkland_Main-3188	Kirkland_Manholes-2962	351.81	Kirkland_Manholes-2566	326.34	167.8	15.18	8	PVC	0.01	2,747	4	20	23	0.9		
Kirkland_Main-3189	Kirkland_Manholes-2966	369.29	Kirkland_Manholes-2965	368.34	79.6	1.19	8	PVC	0.01	770	10	4	14	1.8		
Kirkland_Main-3190	Kirkland_Manholes-2965	368.34	Kirkland_Manholes-2964	368.18	12	1.33	8	PVC	0.01	814	15	8	22	2.8		
Kirkland_Main-3191	Kirkland_Manholes-2964	368.18	Kirkland_Manholes-1916	361.73	249.5	2.59	8	PVC	0.01	1,134	15	12	27	2.4		
Kirkland_Main-3193	Kirkland_Manholes-2967	87.15	Kirkland_Manholes-2969	78.32	80.7	10.94	8	PVC	0.01	2,332	1	4	5	0.2		
Kirkland_Main-3194	Kirkland_Manholes-2968	78.98	Kirkland_Manholes-2969	78.32	100.1	0.66	8	PVC	0.01	573	1	4	6	1		
Kirkland_Main-3195	Kirkland_Manholes-2969	78.32	Kirkland_Manholes-2970	61.2	152.9	11.2	8	PVC	0.01	2,359	3	13	16	0.7		
Kirkland_Main-3196	Kirkland_Manholes-2970	61.2	Kirkland_Manholes-200	55.31	178.6	3.3	8	PVC	0.01	1,280	4	17	21	1.6		

Existing - Peak Hour Flow - Pipe Capacity Table

Label	Upstream Node	Upstream Invert Elevation (ft)	Downstream Node	Downstream Invert Elevation (ft)	Length (ft)	Slope (%)	Diameter (in)	Material	Manning's n	Design Capacity (gpm)	Domestic Flow (gpm)	I/I Flow (gpm)	Total Flow (gpm)	Percent Full (%)	CIP No.	Notes
Kirkland_Main-3197	Kirkland_Manholes-1445	504.92	Kirkland_Manholes-2976	503.85	186.4	0.57	8	Concrete	0.013	411	16	91	108	26.2	SM14-Ex-EX269	
Kirkland_Main-3198	Kirkland_Manholes-2972	508.32	Kirkland_Manholes-2973	507.01	144.1	0.91	8	PVC	0.01	672	0	8	8	1.2		
Kirkland_Main-3199	Kirkland_Manholes-2974	507.07	Kirkland_Manholes-2973	507.01	168.1	0.04	8	PVC	0.01	133	0	4	4	3		
Kirkland_Main-3200	Kirkland_Manholes-2973	507.01	Kirkland_Manholes-2975	506.8	151.1	0.14	8	PVC	0.01	263	1	16	17	6.6		
Kirkland_Main-3201	Kirkland_Manholes-2975	506.8	Kirkland_Manholes-2976	503.85	22	13.39	8	PVC	0.01	2,579	1	20	21	0.8		
Kirkland_Main-3202	Kirkland_Manholes-2978	14.63	Kirkland_Manholes-2730	14.43	56	0.36	18	Concrete	0.013	2,817	224	565	789	28	SM14-Ex-EX289	
Kirkland_Main-3203	Kirkland_Manholes-2977	14.89	Kirkland_Manholes-2978	14.63	69.2	0.38	18	Concrete	0.013	2,891	223	559	782	27.1	SM14-Ex-EX289	
Kirkland_Main-3204	Kirkland_Manholes-2979	372.62	Kirkland_Manholes-2980	359.59	69.3	18.82	8	PVC	0.01	3,058	1	4	5	0.2		
Kirkland_Main-3205	Kirkland_Manholes-2980	359.59	Kirkland_Manholes-2981	355.43	97.4	4.27	8	PVC	0.01	1,457	2	8	10	0.7		
Kirkland_Main-3206	Kirkland_Manholes-2981	355.43	Kirkland_Manholes-2962	351.81	43.7	8.28	8	PVC	0.01	2,029	3	12	14	0.7		
Kirkland_Main-3207	Kirkland_Manholes-2982	168	Kirkland_Manholes-770	166.93	80.1	1.34	8	PVC	0.01	815	0	4	4	0.5		
Kirkland_Main-3208	Kirkland_Manholes-2983	235.2	Kirkland_Manholes-974	234.1	148.8	0.74	8	PVC	0.01	606	1	4	5	0.9		
Kirkland_Main-3209	Kirkland_Manholes-1342	283.15	Kirkland_Manholes-2984	277.63	191.2	2.89	10	PVC	0.01	2,172	106	370	475	21.9		
Kirkland_Main-3210	Kirkland_Manholes-2985	155.7	Kirkland_Manholes-1648	152.03	36.5	10.07	8	PVC	0.01	2,237	3	16	19	0.9		
Kirkland_Main-3211	Kirkland_Manholes-2986	155.86	Kirkland_Manholes-2985	155.7	122.4	0.13	8	PVC	0.01	255	3	8	11	4.3		
Kirkland_Main-3213	Kirkland_Manholes-2987	213	Kirkland_Manholes-2988	212.12	123.5	0.71	8	PVC	0.01	595	3	4	8	1.3		
Kirkland_Main-3214	Kirkland_Manholes-2988	212.12	Kirkland_Manholes-2989	210.69	118.1	1.21	8	PVC	0.01	776	5	9	13	1.7		
Kirkland_Main-3215	Kirkland_Manholes-2989	210.69	Kirkland_Manholes-61	205.17	54.3	10.16	8	PVC	0.01	2,247	5	13	18	0.8		
Kirkland_Main-3216	Kirkland_Manholes-2990	239.73	Kirkland_Manholes-1021	230.72	366.4	2.46	8	PVC	0.01	1,106	2	4	7	0.6		
Kirkland_Main-3217	Kirkland_Manholes-2993	335.98	Kirkland_Manholes-2939	317.33	213.5	8.74	8	PVC	0.01	2,084	2	8	10	0.5		
Kirkland_Main-3218	Kirkland_Manholes-1083	220.88	Kirkland_Manholes-2996	220.63	31.5	0.79	8	PVC	0.01	628	130	501	806	128.4	SM14-Ex-EX321	
Kirkland_Main-3219	Kirkland_Manholes-2995	224.98	Kirkland_Manholes-2996	220.63	134.4	3.24	8	PVC	0.01	1,269	9	4	13	1		
Kirkland_Main-3220	Kirkland_Manholes-2997	482.7	Kirkland_Manholes-2998	482.02	242.2	0.28	8	PVC	0.01	374	0	4	4	1.2		
Kirkland_Main-3221	Kirkland_Manholes-2998	482.02	Kirkland_Manholes-555	477.96	81.6	4.97	8	PVC	0.01	1,572	1	8	9	0.6		
Kirkland_Main-3222	Kirkland_Manholes-2999	479.74	Kirkland_Manholes-3000	475.69	102.7	3.94	8	PVC	0.01	1,400	1	4	5	0.3		
Kirkland_Main-3223	Kirkland_Manholes-3000	475.69	Kirkland_Manholes-3001	471.99	137.1	2.7	8	PVC	0.01	1,158	1	8	9	0.8		
Kirkland_Main-3224	Kirkland_Manholes-3001	471.99	Kirkland_Manholes-3002	466.73	134.5	3.91	8	PVC	0.01	1,394	1	12	13	0.9		
Kirkland_Main-3225	Kirkland_Manholes-3002	466.73	Kirkland_Manholes-3003	466.06	37	1.81	8	PVC	0.01	949	1	16	17	1.8		
Kirkland_Main-3226	Kirkland_Manholes-3003	466.06	Kirkland_Manholes-3004	465.24	79.1	1.04	8	PVC	0.01	718	1	20	21	2.9		
Kirkland_Main-3227	Kirkland_Manholes-3004	465.24	Kirkland_Manholes-3005	459.83	119.2	4.54	8	PVC	0.01	1,502	2	24	26	1.7		
Kirkland_Main-3228	Kirkland_Manholes-3005	459.83	Kirkland_Manholes-3006	456.1	91.8	4.07	8	PVC	0.01	1,422	2	28	30	2.1		
Kirkland_Main-3229	Kirkland_Manholes-3007	456.9	Kirkland_Manholes-3008	447.1	310.3	3.16	8	PVC	0.01	1,253	2	8	10	0.8		
Kirkland_Main-3230	Kirkland_Manholes-3009	452.69	Kirkland_Manholes-3008	447.1	238.1	2.35	8	PVC	0.01	1,080	0	4	4	0.4		
Kirkland_Main-3231	Kirkland_Manholes-3008	447.1	Kirkland_Manholes-1990	439.8	282	2.59	8	PVC	0.01	1,134	2	16	18	1.6		
Kirkland_Main-3232	Kirkland_Manholes-3010	442.64	Kirkland_Manholes-3011	434.12	219.9	3.87	8	PVC	0.01	1,388	0	4	4	0.3		
Kirkland_Main-3233	Kirkland_Manholes-3011	434.12	Kirkland_Manholes-2005	431.24	367.7	0.78	8	PVC	0.01	624	1	8	9	1.4		
Kirkland_Main-3234	Kirkland_Manholes-2005	431.24	Kirkland_Manholes-2006	430.4	270.9	0.31	8	PVC	0.01	393	1	12	13	3.4		
Kirkland_Main-3235	Kirkland_Manholes-2006	430.4	Kirkland_Manholes-2007	429.08	284.1	0.46	8	PVC	0.01	481	3	16	19	3.9		
Kirkland_Main-3236	Kirkland_Manholes-3012	424.86	Kirkland_Manholes-2011	417.75	388.4	1.83	8	PVC	0.01	954	1	4	5	0.5		
Kirkland_Main-3237	Kirkland_Manholes-3014	470	Kirkland_Manholes-3013	459.93	193.2	5.21	8	PVC	0.01	1,610	1	4	5	0.3		
Kirkland_Main-3238	Kirkland_Manholes-3013	459.93	Kirkland_Manholes-548	453.36	230.6	2.85	8	PVC	0.01	1,190	2	8	10	0.8		
Kirkland_Main-3239	Kirkland_Manholes-3020	302.86	Kirkland_Manholes-1341	299.38	98.7	3.52	8	PVC	0.01	1,324	5	48	53	4		
Kirkland_Main-3240	Kirkland_Manholes-3019	303.35	Kirkland_Manholes-3020	302.86	19.4	2.52	8	PVC	0.01	1,119	5	44	49	4.4		
Kirkland_Main-3241	Kirkland_Manholes-3021	303.74	Kirkland_Manholes-3019	303.35	54.4	0.72	8	PVC	0.01	597	5	40	45	7.5		
Kirkland_Main-3242	Kirkland_Manholes-3022	311.69	Kirkland_Manholes-3021	303.74	55.5	14.32	8	PVC	0.01	2,668	0	4	4	0.2		
Kirkland_Main-3243	Kirkland_Manholes-3023	312.84	Kirkland_Manholes-3021	303.74	71.1	12.8	8	PVC	0.01	2,523	5	32	37	1.5		
Kirkland_Main-3244	Kirkland_Manholes-3018	329.19	Kirkland_Manholes-3023	312.84	105.9	15.45	8	PVC	0.01	2,771	5	28	33	1.2		
Kirkland_Main-3245	Kirkland_Manholes-3017	343.42	Kirkland_Manholes-3018	329.19	180.7	7.87	8	PVC	0.01	1,978	4	24	28	1.4		
Kirkland_Main-3246	Kirkland_Manholes-3015	371.23	Kirkland_Manholes-3017	343.42	160.4	17.33	8	PVC	0.01	2,935	3	20	23	0.8		
Kirkland_Main-3247	Kirkland_Manholes-3016	372.66	Kirkland_Manholes-3015	371.23	122.5	1.17	8	PVC	0.01	762	3	16	19	2.4		
Kirkland_Main-3248	Kirkland_Manholes-3024	372.77	Kirkland_Manholes-1930	369.31	206.2	1.68	8	PVC	0.01	913	1	4	5	0.6		
Kirkland_Main-3250	Kirkland_Manholes-3025	189.5	Kirkland_Manholes-3026	186.45	198.2	1.54	8	PVC	0.01	875	0	4	5	0.5		
Kirkland_Main-3251	Kirkland_Manholes-3026	186.45	Kirkland_Manholes-1035	182.7	331	1.13	8	PVC	0.01	750	1	9	10	1.3		
Kirkland_Main-3252	Kirkland_Manholes-3028	332.75	Kirkland_Manholes-1582	332.21	111.6	0.48	12	Concrete	0.013	1,113	39	179	217	19.5	SM14-Ex-EX206	
Kirkland_Main-3253	Kirkland_Manholes-3027	333.49	Kirkland_Manholes-3028	332.75	24.2	3.06	8	PVC	0.01	1,233	1	4	5	0.4		
Kirkland_Main-3257	Kirkland_Manholes-3031	384.74	Kirkland_Manholes-1926	383.42	23.1	5.72	12	PVC	0.01	4,970	123	524	647	13		
Kirkland_Main-3258	Kirkland_Manholes-1	73.25	Kirkland_Manholes-21	62.08	92.5	12.08	8	PVC	0.01	2,451	7	21	28	1.2		
Kirkland_Main-3259	Kirkland_Manholes-20	65.72	Kirkland_Manholes-21	62.08	153.9	2.36	8	PVC	0.01	1,084	0	4	4	0.4		
Kirkland_Main-3260	Kirkland_Manholes-3070	330.73	Kirkland_Manholes-927	307.71	144.8	15.9	8	PVC	0.01	2,811	6	4	10	0.4		
Kirkland_Main-3261	Kirkland_Manholes-3078	370.92	Kirkland_Manholes-3077	366.14	136.6	3.5	8	PVC	0.01	1,319	0	4	4	0.3		
Kirkland_Main-3262	Kirkland_Manholes-3077	366.14	Kirkland_Manholes-3076	363.7	26.9	9.07	8	PVC	0.01	2,124	0	8	8	0.4		
Kirkland_Main-3263	Kirkland_Manholes-3076	363.7	Kirkland_Manholes-3075	343.97	114.4	17.24	8	PVC	0.01	2,928	0	12	12	0.4		

Existing - Peak Hour Flow - Pipe Capacity Table

Label	Upstream Node	Upstream Invert Elevation (ft)	Downstream Node	Downstream Invert Elevation (ft)	Length (ft)	Slope (%)	Diameter (in)	Material	Manning's n	Design Capacity (gpm)	Domestic Flow (gpm)	I/I Flow (gpm)	Total Flow (gpm)	Percent Full (%)	CIP No.	Notes
Kirkland_Main-3264	Kirkland_Manholes-3075	343.97	Kirkland_Manholes-3079	316.42	161.6	17.05	8	PVC	0.01	2,911	1	16	17	0.6		
Kirkland_Main-3265	Kirkland_Manholes-3079	316.42	Kirkland_Manholes-3074	303.68	195.1	6.53	8	PVC	0.01	1,802	1	20	21	1.2		
Kirkland_Main-3266	Kirkland_Manholes-3074	303.68	Kirkland_Manholes-3073	289.21	131.6	10.99	8	PVC	0.01	2,337	1	24	25	1.1		
Kirkland_Main-3267	Kirkland_Manholes-3073	289.21	Kirkland_Manholes-3072	273.11	354	4.55	8	PVC	0.01	1,504	1	28	29	1.9		
Kirkland_Main-3268	Kirkland_Manholes-3072	273.11	Kirkland_Manholes-3071	273.04	17.1	0.4	8	PVC	0.01	445	1	32	33	7.5		
Kirkland_Main-3269	Kirkland_Manholes-3071	273.04	Kirkland_Manholes-1317	271.64	20.2	6.94	8	PVC	0.01	1,858	1	36	37	2		
Kirkland_Main-3270	Kirkland_Manholes-3081	373.55	Kirkland_Manholes-1319	372.4	30.4	3.78	8	PVC	0.01	1,371	65	187	252	18.4		
Kirkland_Main-3271	Kirkland_Manholes-3080	382.34	Kirkland_Manholes-3081	377.27	187.3	2.71	8	PVC	0.01	1,160	0	4	4	0.3		Drop Connection
Kirkland_Main-3272	Kirkland_Manholes-3083	435.32	Kirkland_Manholes-3082	428.49	311.8	2.19	8	PVC	0.01	1,044	1	4	5	0.5		
Kirkland_Main-3273	Kirkland_Manholes-3084	333.87	Kirkland_Manholes-3085	329.83	142	2.85	8	PVC	0.01	1,189	0	4	4	0.3		
Kirkland_Main-3274	Kirkland_Manholes-3085	329.83	Kirkland_Manholes-3086	304.85	242	10.32	12	PVC	0.01	6,678	1	8	8	0.1		
Kirkland_Main-3275	Kirkland_Manholes-3086	304.85	Kirkland_Manholes-3087	296.66	149.5	5.48	12	PVC	0.01	4,865	3	12	15	0.3		
Kirkland_Main-3276	Kirkland_Manholes-3087	296.66	Kirkland_Manholes-3088	288.51	213.4	3.82	8	Concrete	0.013	1,060	3	16	19	1.8		
Kirkland_Main-3277	Kirkland_Manholes-3088	288.51	Kirkland_Manholes-3089	268.55	207	9.64	8	Concrete	0.013	1,684	3	20	23	1.4		
Kirkland_Main-3278	Kirkland_Manholes-3089	268.55	Kirkland_Manholes-2427	267.5	263	0.4	8	Concrete	0.013	343	51	24	74	21.7		
Kirkland_Main-3279	Kirkland_Manholes-2197	480.89	Kirkland_Manholes-1417	477.64	213.1	1.52	8	PVC	0.01	871	2	12	14	1.6		
Kirkland_Main-3280	Kirkland_Manholes-3090	416.74	Kirkland_Manholes-2916	416.17	246	0.23	8	PVC	0.01	339	1	4	5	1.6		
Kirkland_Main-3281	Kirkland_Manholes-3092	96.93	Kirkland_Manholes-173	34.1	219.6	28.61	8	PVC	0.01	3,771	2	9	10	0.3		
Kirkland_Main-3282	Kirkland_Manholes-3091	115.12	Kirkland_Manholes-3092	96.93	129.4	14.06	8	PVC	0.01	2,644	1	4	5	0.2		
Kirkland_Main-3283	Kirkland_Manholes-3093	117.97	Kirkland_Manholes-3094	63.71	388.1	13.98	8	PVC	0.01	2,636	2	4	6	0.2		
Kirkland_Main-3284	Kirkland_Manholes-3094	63.71	Kirkland_Manholes-437	58.56	159.5	3.23	8	PVC	0.01	1,267	4	9	13	1		
Kirkland_Main-3285	Kirkland_Manholes-3095	195.85	Kirkland_Manholes-2070	185.96	195.6	5.06	8	PVC	0.01	1,585	1	4	5	0.3		
Kirkland_Main-3287	Kirkland_Manholes-205	228.15	Kirkland_Manholes-3096	204.91	232.4	10	8	Concrete	0.013	1,715	14	34	48	2.8	SM14-Ex-EX57	
Kirkland_Main-3288	Kirkland_Manholes-3096	204.91	Kirkland_Manholes-234	184.45	273.4	7.48	8	Concrete	0.013	1,484	19	47	66	4.5	SM14-Ex-EX57	
Kirkland_Main-3289	Kirkland_Manholes-1218	220.85	Kirkland_Manholes-3096	204.91	278.6	5.72	8	Concrete	0.013	1,297	4	9	13	1	SM14-Ex-EX59	
Kirkland_Main-3290	Kirkland_Manholes-3097	172.14	Kirkland_Manholes-1639	169.94	87.4	2.52	8	Concrete	0.013	861	14	83	97	11.3	SM14-Ex-EX202	
Kirkland_Main-3291	Kirkland_Manholes-3098	172.34	Kirkland_Manholes-3097	172.14	17.4	1.15	8	Concrete	0.013	582	13	79	93	16	SM14-Ex-EX202	
Kirkland_Main-3292	Kirkland_Manholes-1640	188.59	Kirkland_Manholes-3098	174.29	160.1	8.93	8	PVC	0.01	2,107	3	8	11	0.5	SM14-Ex-EX203	Drop Connection
Kirkland_Main-3293	Kirkland_Manholes-2696	172.94	Kirkland_Manholes-3098	172.34	33	1.82	8	Concrete	0.013	731	10	68	78	10.6	SM14-Ex-EX202	
Kirkland_Main-3294	Kirkland_Manholes-3099	77.83	Kirkland_Manholes-2204	53	99.4	24.97	8	PVC	0.01	3,523	3	12	15	0.4		
Kirkland_Main-3295	Kirkland_Manholes-2725	97.33	Kirkland_Manholes-3099	77.83	158.8	12.28	8	PVC	0.01	2,470	1	6	8	0.3		
Kirkland_Main-3296	Kirkland_Manholes-2663	50.64	Kirkland_Manholes-3043	37.72	98.7	13.08	12	PVC	0.01	7,519	124	437	561	7.5		
Kirkland_Main-3297	Kirkland_Manholes-3043	37.72	Kirkland_Manholes-3044	18.06	181	10.86	12	PVC	0.01	6,850	124	443	567	8.3		
Kirkland_Main-3298	Kirkland_Manholes-3106	117	Kirkland_Manholes-3105	116.05	61.3	1.55	8	PVC	0.01	877	14	91	105	12	SM10	
Kirkland_Main-3299	Kirkland_Manholes-3107	127.14	Kirkland_Manholes-3106	117	167.2	6.07	8		0.012	1,447	14	82	96	6.6	SM10	
Kirkland_Main-3300	Kirkland_Manholes-1180	118.31	Kirkland_Manholes-3108	104.6	196.1	6.99	8	Concrete	0.013	1,434	1	8	9	0.6	SM10	
Kirkland_Main-3301	Kirkland_Manholes-3103	113.84	Kirkland_Manholes-3109	110.43	345.5	0.99	10	Concrete	0.013	977	17	123	141	14.4	SM10	
Kirkland_Main-3302	Kirkland_Manholes-3109	110.43	Kirkland_Manholes-3108	104.6	85.9	6.79	8	Concrete	0.013	1,413	18	132	150	10.6	SM10	
Kirkland_Main-3303	Kirkland_Manholes-3108	104.6	Kirkland_Manholes-513	81.7	198.3	11.55	8	Concrete	0.013	1,843	19	148	167	9.1	SM10	
Kirkland_Main-3305	Kirkland_Manholes-3105	116.05	Kirkland_Manholes-3104	114.41	128.6	1.28	8	PVC	0.01	796	15	99	114	14.4	SM10	
Kirkland_Main-3306	Kirkland_Manholes-3110	73.01	Kirkland_Manholes-306	19.99	234	22.66	8	Concrete	0.013	2,582	22	106	128	5	SM10	
Kirkland_Main-3307	Kirkland_Manholes-305	74.69	Kirkland_Manholes-3110	73.01	8.3	20.21	8	Concrete	0.013	2,438	21	97	118	4.8	SM10	
Kirkland_Main-3308	Kirkland_Manholes-3114	174.9	Kirkland_Manholes-3113	173.48	159.7	0.89	8	PVC	0.01	665	32	4	36	5.4		
Kirkland_Main-3309	Kirkland_Manholes-3113	173.48	Kirkland_Manholes-3112	173.15	82.5	0.4	8	PVC	0.01	446	32	8	40	8.9		
Kirkland_Main-3310	Kirkland_Manholes-3112	173.15	Kirkland_Manholes-3111	170.05	248.7	1.25	8	PVC	0.01	787	32	12	44	5.6		
Kirkland_Main-3311	Kirkland_Manholes-3111	170.05	Kirkland_Manholes-1125	167.88	64.7	3.36	8	PVC	0.01	1,292	32	16	48	3.7		
Kirkland_Main-3314	Kirkland_Manholes-3116	330.46	Kirkland_Manholes-2933	328.79	108.5	1.54	8	PVC	0.01	875	1	4	5	0.5		
Kirkland_Main-3315	Kirkland_Manholes-3117	134.38	Kirkland_Manholes-161	132.09	173.7	1.32	8	PVC	0.01	809	2	4	6	0.7		
Kirkland_Main-3316	Kirkland_Manholes-3118	331.75	Kirkland_Manholes-2934	330.48	196.7	0.65	8	PVC	0.01	567	0	4	4	0.8		
Kirkland_Main-3317	Kirkland_Manholes-3119	327.7	Kirkland_Manholes-2932	327.56	161.9	0.09	8	PVC	0.01	207	2	20	22	10.7		
Kirkland_Main-3318	Kirkland_Manholes-2933	328.79	Kirkland_Manholes-3119	327.7	135.5	0.8	8	PVC	0.01	632	1	8	9	1.5		
Kirkland_Main-3319	Kirkland_Manholes-2934	330.48	Kirkland_Manholes-3119	327.7	250.4	1.11	8	PVC	0.01	743	1	8	9	1.2		
Kirkland_Main-3320	Kirkland_Manholes-839	334.68	Kirkland_Manholes-3121	329.59	187.8	2.71	8	PVC	0.01	1,161	14	40	54	4.6		
Kirkland_Main-3321	Kirkland_Manholes-3120	345	Kirkland_Manholes-3121	344.79	53.6	0.4	8	PVC	0.01	446	1	4	5	1.1		Drop Connection
Kirkland_Main-3322	Kirkland_Manholes-3121	329.59	Kirkland_Manholes-3122	329.14	65.3	0.69	8	PVC	0.01	585	15	48	62	10.7		
Kirkland_Main-3323	Kirkland_Manholes-3122	329.14	Kirkland_Manholes-840	326.85	337.3	0.68	8	PVC	0.01	581	17	52	69	11.8		
Kirkland_Main-3326	Kirkland_Manholes-3123	227.69	Kirkland_Manholes-2497	194.88	329.5	9.96	6	PVC	0.01	1,033	7	4	11	1.1	SM14-Ex-EX236	
Kirkland_Main-3332	Kirkland_Manholes-3125	215.03	Kirkland_Manholes-3124	203.5	175.2	6.58	8	Concrete	0.013	1,391	1	4	5	0.4	SM14-Ex-EX20	
Kirkland_Main-3333	Kirkland_Manholes-3124	203.5	Kirkland_Manholes-3126	177.5	261.8	9.93	8	Concrete	0.013	1,709	2	9	10	0.6	SM14-Ex-EX20	
Kirkland_Main-3336	Kirkland_Manholes-3006	456.1	Kirkland_Manholes-539	454.38	165.4	1.04	8	PVC	0.01	719	3	32	34	4.8		
Kirkland_Main-3337	Kirkland_Manholes-555	477.96	Kirkland_Manholes-535	472.49	159.7	3.43	8	PVC	0.01	1,305	2	12	14	1.1		
Kirkland_Main-3338	Kirkland_Manholes-2509	126.48	Kirkland_Manholes-2508	120.01	60.3	10.73	6	Concrete	0.013	825	2	12	15	1.8	SM14-Ex-EX229	

Existing - Peak Hour Flow - Pipe Capacity Table

Label	Upstream Node	Upstream Invert Elevation (ft)	Downstream Node	Downstream Invert Elevation (ft)	Length (ft)	Slope (%)	Diameter (in)	Material	Manning's n	Design Capacity (gpm)	Domestic Flow (gpm)	I/I Flow (gpm)	Total Flow (gpm)	Percent Full (%)	CIP No.	Notes
Kirkland_Main-3339	Kirkland_Manholes-2566	326.34	Kirkland_Manholes-2567	316.05	133.4	7.71	8	Concrete	0.013	1,506	4	24	28	1.8	SM14-Ex-EX307	
Kirkland_Main-3340	Kirkland_Manholes-728	70.86	Kirkland_Manholes-2928	60.36	293.8	3.57	18	PVC	0.01	11,586	112	543	656	5.7		
Kirkland_Main-3341	Kirkland_Manholes-3127	324.33	Kirkland_Manholes-3128	323.94	81.4	0.48	8	Concrete	0.013	375	0	4	4	1.1	SM14-Ex-EX54	
Kirkland_Main-3344	Kirkland_Manholes-3129	308.71	Kirkland_Manholes-2956	306.62	67.6	3.09	8	PVC	0.01	1,240	1	12	13	1		
Kirkland_Main-3345	Kirkland_Manholes-3130	70.51	Kirkland_Manholes-3131	61.63	403.3	2.2	8	PVC	0.01	1,046	0	4	4	0.4		
Kirkland_Main-3346	Kirkland_Manholes-3131	61.63	Kirkland_Manholes-201	56.98	404.6	1.15	8	PVC	0.01	756	0	9	9	1.1		
Kirkland_Main-3347	Kirkland_Manholes-3132	514.05	Kirkland_Manholes-3133	512.61	110	1.31	8	PVC	0.01	807	0	4	4	0.5		
Kirkland_Main-3348	Kirkland_Manholes-3133	512.61	Kirkland_Manholes-1441	509.69	156.4	1.87	8	PVC	0.01	963	0	8	8	0.9		
Kirkland_Main-3349	Kirkland_Manholes-3134	66.29	Kirkland_Manholes-1828	65.79	294	0.17	15	PVC	0.01	1,554	100	683	1,066	68.6	SM14-2035-DF11	
Kirkland_Main-3350	Kirkland_Manholes-2994	67.86	Kirkland_Manholes-3135	66.49	13.6	10.06	15	PVC	0.01	11,957	99	667	1,048	8.8		
Kirkland_Main-3351	Kirkland_Manholes-3135	66.49	Kirkland_Manholes-3134	66.29	136.2	0.15	15	PVC	0.01	1,460	99	675	1,057	72.4	SM14-2035-DF11	
Kirkland_Main-3353	Kirkland_Manholes-3137	192.8	Kirkland_Manholes-1304	180.12	128.3	9.88	6	Concrete	0.013	792	4	16	21	2.6	SM14-Ex-EX106	
Kirkland_Main-3354	Kirkland_Manholes-1305	222.35	Kirkland_Manholes-3137	192.8	245.9	12.02	6	Concrete	0.013	873	3	8	11	1.3	SM14-Ex-EX106	
Kirkland_Main-3356	Kirkland_Manholes-3138	280.24	Kirkland_Manholes-672	266.2	264	5.32	8	PVC	0.01	1,626	0	4	4	0.2		
Kirkland_Main-3357	Kirkland_Manholes-3139	191.69	Kirkland_Manholes-769	165.1	236	11.27	8	PVC	0.01	2,367	2	4	6	0.2		
Kirkland_Main-3358	Kirkland_Manholes-3140	184.54	Kirkland_Manholes-520	182.65	320.9	0.59	6	Concrete	0.013	193	2	8	10	5.3	SM10	
Kirkland_Main-3359	Kirkland_Manholes-526	148.56	Kirkland_Manholes-3141	141.49	317.3	2.23	8	Concrete	0.013	810	4	33	37	4.6	SM10	
Kirkland_Main-3360	Kirkland_Manholes-3141	141.49	Kirkland_Manholes-3107	127.14	314.8	4.56	8	Concrete	0.013	1,158	11	66	77	6.6	SM10	
Kirkland_Main-3361	Kirkland_Manholes-495	169.48	Kirkland_Manholes-3142	153.62	319.4	4.97	8	Concrete	0.013	1,209	4	16	20	1.7	SM10	
Kirkland_Main-3362	Kirkland_Manholes-3142	153.62	Kirkland_Manholes-3141	141.49	269.1	4.51	8	Concrete	0.013	1,151	6	25	30	2.6	SM10	
Kirkland_Main-3366	Kirkland_Manholes-3148	304.94	Kirkland_Manholes-3147	292.59	197.5	6.25	8	PVC	0.01	1,763	1	4	5	0.3		
Kirkland_Main-3367	Kirkland_Manholes-3147	292.59	Kirkland_Manholes-3146	290.48	68.4	3.08	8	PVC	0.01	1,238	1	8	9	0.7		
Kirkland_Main-3368	Kirkland_Manholes-3146	290.48	Kirkland_Manholes-3145	283.25	74.7	9.68	8	PVC	0.01	2,194	1	12	13	0.6		
Kirkland_Main-3369	Kirkland_Manholes-3149	279.32	Kirkland_Manholes-672	266.2	331.7	3.96	8	PVC	0.01	1,402	5	48	53	3.8		
Kirkland_Main-3370	Kirkland_Manholes-2888	290.53	Kirkland_Manholes-3149	279.32	39.9	28.13	8	PVC	0.01	3,739	3	20	23	0.6		
Kirkland_Main-3371	Kirkland_Manholes-3145	283.25	Kirkland_Manholes-3149	279.32	272.6	1.44	8	PVC	0.01	847	2	24	25	3		
Kirkland_Main-3372	Kirkland_Manholes-1382	428.64	Kirkland_Manholes-3150	427.16	302.5	0.49	8	PVC	0.01	493	1	8	9	1.9		
Kirkland_Main-3373	Kirkland_Manholes-3150	427.16	Kirkland_Manholes-1347	427.05	67.8	0.16	8	PVC	0.01	284	2	12	14	4.8		
Kirkland_Main-3375	Kirkland_Manholes-2803	158.22	Kirkland_Manholes-3151	154.6	93.3	3.88	8	Concrete	0.013	1,068	29	123	153	14.3	SM14-Ex-EX313	
Kirkland_Main-3376	Kirkland_Manholes-2609	193.8	Kirkland_Manholes-3152	172.55	189.8	11.2	8	PVC	0.01	2,359	1	8	9	0.4		
Kirkland_Main-3377	Kirkland_Manholes-3154	166.6	Kirkland_Manholes-3153	166.34	271.7	0.1	8	Concrete	0.013	168	20	56	76	45.3	SM14-Ex-EX294	
Kirkland_Main-3378	Kirkland_Manholes-2629	172.55	Kirkland_Manholes-3154	166.6	85	7	8	Concrete	0.013	1,435	11	24	35	2.4	SM14-Ex-EX295	
Kirkland_Main-3379	Kirkland_Manholes-3155	166.88	Kirkland_Manholes-3154	166.6	37.7	0.74	8	Concrete	0.013	467	8	28	36	7.8	SM14-Ex-EX294	
Kirkland_Main-3380	Kirkland_Manholes-2637	187.87	Kirkland_Manholes-3156	168.61	186.4	10.33	8	Concrete	0.013	1,743	8	20	28	1.6	SM14-Ex-EX294	
Kirkland_Main-3381	Kirkland_Manholes-3156	168.61	Kirkland_Manholes-3155	166.88	387	0.45	8	Concrete	0.013	363	8	24	32	8.9	SM14-Ex-EX294	
Kirkland_Main-3382	Kirkland_Manholes-3153	166.34	O-37	146.26	92.7	21.67	8	Concrete	0.013	2,525	85	282	367	14.5	SM14-Ex-EX294	
Kirkland_Main-3383	Kirkland_Manholes-3157	158.55	O-36	147.51	94.1	11.73	8	Concrete	0.013	1,858	16	64	80	4.3	SM14-Ex-EX281	
Kirkland_Main-3384	Kirkland_Manholes-3158	172.29	Kirkland_Manholes-3157	158.55	121.1	11.35	8	Concrete	0.013	1,827	1	4	5	0.3	SM14-Ex-EX281	
Kirkland_Main-3385	Kirkland_Manholes-2628	186	Kirkland_Manholes-3159	168.84	190.6	9	8	Concrete	0.013	1,627	14	52	65	4	SM14-Ex-EX281	
Kirkland_Main-3386	Kirkland_Manholes-3159	168.84	Kirkland_Manholes-3157	158.55	57.7	17.84	8	Concrete	0.013	2,290	15	56	70	3.1	SM14-Ex-EX281	Drop Connection
Kirkland_Main-3387	Kirkland_Manholes-2601	228.74	Kirkland_Manholes-3160	174.95	323	16.65	8	Concrete	0.013	2,213	34	127	161	7.3	SM14-Ex-EX299	
Kirkland_Main-3388	Kirkland_Manholes-2796	185.45	Kirkland_Manholes-3161	177.36	230.8	3.5	8	Concrete	0.013	1,015	6	20	26	2.6	SM14-Ex-EX296	
Kirkland_Main-3389	Kirkland_Manholes-2599	217.5	Kirkland_Manholes-3161	177.36	310.3	12.94	8	Concrete	0.013	1,951	4	16	20	1	SM14-Ex-EX301	
Kirkland_Main-3390	Kirkland_Manholes-3162	175.71	Kirkland_Manholes-3160	174.95	166.9	0.46	8	Concrete	0.013	366	12	44	55	15.1	SM14-Ex-EX296	
Kirkland_Main-3391	Kirkland_Manholes-3161	177.36	Kirkland_Manholes-3162	175.71	336.3	0.49	8	Concrete	0.013	380	11	40	51	13.4	SM14-Ex-EX296	
Kirkland_Main-3392	Kirkland_Manholes-3160	174.95	Kirkland_Manholes-3163	173.85	309.7	0.36	8	Concrete	0.013	323	47	175	221	68.5	SM14-Ex-EX296	
Kirkland_Main-3393	Kirkland_Manholes-3163	173.85	Kirkland_Manholes-3152	172.55	286.2	0.45	8	Concrete	0.013	365	55	195	250	68.4	SM14-Ex-EX296	
Kirkland_Main-3394	Kirkland_Manholes-2600	217.97	Kirkland_Manholes-3163	173.85	279.5	15.78	8	Concrete	0.013	2,155	8	16	23	1.1	SM14-Ex-EX298	
Kirkland_Main-3395	Kirkland_Manholes-3152	172.55	Kirkland_Manholes-3164	171.21	150.7	0.89	8	Concrete	0.013	511	57	207	263	51.5	SM14-Ex-EX296	
Kirkland_Main-3397	Kirkland_Manholes-3164	171.21	Kirkland_Manholes-3153	166.34	136.7	3.56	8	Concrete	0.013	1,024	64	223	286	27.9	SM14-Ex-EX296	
Kirkland_Main-3398	Kirkland_Manholes-2123	164.83	Kirkland_Manholes-3165	156.79	188.1	4.27	8	Concrete	0.013	1,121	3	12	15	1.4	SM14-Ex-EX238	
Kirkland_Main-3399	Kirkland_Manholes-2493	157.85	Kirkland_Manholes-3165	156.79	186.1	0.57	6		0.013	190	1	4	5	2.5	SM14-Ex-EX237	
Kirkland_Main-3400	Kirkland_Manholes-3165	156.79	O-34	148.75	44.4	18.12	8	Concrete	0.013	2,308	5	20	25	1.1	SM14-Ex-EX238	
Kirkland_Main-3401	Kirkland_Manholes-3151	154.6	O-38	150	83	5.54	12	Concrete	0.013	3,764	29	127	157	4.2	SM14-Ex-EX313	
Kirkland_Main-3402	Kirkland_Manholes-3166	161.38	Kirkland_Manholes-3167	157.21	249.9	1.67	6	Concrete	0.013	325	8	12	20	6.1		
Kirkland_Main-3403	Kirkland_Manholes-3167	157.21	O-30	156.87	20.3	1.67	6	Concrete	0.013	326	8	16	24	7.3		Drop Connection
Kirkland_Main-3404	Kirkland_Manholes-2068	163.08	O-43	162.02	20.5	5.16	8	Concrete	0.013	1,232	13	64	77	6.2	SM14-Ex-EX198	
Kirkland_Main-3405	Kirkland_Manholes-2069	170.43	Kirkland_Manholes-3168	162.8	388.5	1.96	8	Concrete	0.013	760	76	95	171	22.5	SM14-Ex-EX199	
Kirkland_Main-3406	Kirkland_Manholes-3168	162.8	O-29	162.02	22.8	3.42	8	Concrete	0.013	1,004	77	99	176	17.5	SM14-Ex-EX199	
Kirkland_Main-3407	Kirkland_Manholes-3169	153.32	Kirkland_Manholes-1708	148.34	451.5	1.1	12	Concrete	0.013	1,679	0	8	8	0.5	SM14-Ex-EX197	
Kirkland_Main-3408	Kirkland_Manholes-3170	175.74	O-28	173.9	72.2	2.55	8	PVC	0.01	1,125	0	4	4	0.4		
Kirkland_Main-3409	Kirkland_Manholes-1642	158.76	O-27	153.59	147.5	3.5	8	Concrete	0.013	1,015	234	950	1,184	116.6	SM7	

Existing - Peak Hour Flow - Pipe Capacity Table

Label	Upstream Node	Upstream Invert Elevation (ft)	Downstream Node	Downstream Invert Elevation (ft)	Length (ft)	Slope (%)	Diameter (in)	Material	Manning's n	Design Capacity (gpm)	Domestic Flow (gpm)	I/I Flow (gpm)	Total Flow (gpm)	Percent Full (%)	CIP No.	Notes
Kirkland_Main-3410	Kirkland_Manholes-1646	177.66	O-23	163.59	79.6	17.67	8	Concrete	0.013	2,279	0	4	4	0.2	SM14-Ex-EX174	
Kirkland_Main-3411	Kirkland_Manholes-1602	196.74	Kirkland_Manholes-3171	164.9	343.8	9.26	8	Concrete	0.013	1,651	74	238	312	18.9	SM14-Ex-EX172	
Kirkland_Main-3412	Kirkland_Manholes-3171	164.9	O-22	163.59	29	4.51	12	Concrete	0.013	3,397	132	421	553	16.3	SM14-Ex-EX121	
Kirkland_Main-3413	Kirkland_Manholes-3172	165.73	Kirkland_Manholes-3171	164.9	49.5	1.68	8	Concrete	0.013	702	58	179	237	33.8	SM14-Ex-EX121	
Kirkland_Main-3414	Kirkland_Manholes-1598	169.75	Kirkland_Manholes-3172	165.73	259.8	1.55	8	Concrete	0.013	675	58	175	233	34.6	SM14-Ex-EX121	
Kirkland_Main-3415	Kirkland_Manholes-3173	155.95	O-16	154.93	82	1.24	8	PVC	0.01	787	7	41	48	6.1		
Kirkland_Main-3416	Kirkland_Manholes-1274	175.64	Kirkland_Manholes-3173	155.95	196.1	10.04	8	PVC	0.01	2,234	6	33	39	1.7		
Kirkland_Main-3417	Kirkland_Manholes-458	212.1	O-14	173.22	270.2	14.39	8	Concrete	0.013	2,057	31	123	154	7.5	SM14-Ex-EX67	
Kirkland_Main-3418	Kirkland_Manholes-3174	172.82	O-13	166.72	27.1	22.51	8	PVC	0.01	3,345	2	20	22	0.7		
Kirkland_Main-3419	Kirkland_Manholes-472	192.62	Kirkland_Manholes-3174	172.82	71.3	27.75	8	PVC	0.01	3,714	2	16	18	0.5		
Kirkland_Main-3420	Kirkland_Manholes-466	159.47	O-12	159.29	18.7	0.96	8	Concrete	0.013	531	13	56	69	12.9	SM14-Ex-EX45	
Kirkland_Main-3421	Kirkland_Manholes-786	173.41	O-11	153.37	102.1	19.63	8	PVC	0.01	3,124	62	294	356	11.4		
Kirkland_Main-3422	Kirkland_Manholes-3175	156.47	Kirkland_Manholes-1105	155.49	245.4	0.4	8	PVC	0.01	446	74	282	356	79.8	SM14-2021-DF3	
Kirkland_Main-3424	Kirkland_Manholes-3176	350.9	Kirkland_Manholes-2993	335.98	232.3	6.42	8	PVC	0.01	1,787	1	4	5	0.3		
Kirkland_Main-3425	Kirkland_Manholes-3183	400.11	Kirkland_Manholes-3182	398.7	286.4	0.49	8	PVC	0.01	495	0	4	4	0.8		
Kirkland_Main-3426	Kirkland_Manholes-3182	398.7	Kirkland_Manholes-3181	397.83	157.2	0.55	8	PVC	0.01	525	0	8	8	1.5		
Kirkland_Main-3427	Kirkland_Manholes-3181	397.83	Kirkland_Manholes-3180	396.32	304.9	0.5	8	PVC	0.01	496	0	12	12	2.5		
Kirkland_Main-3428	Kirkland_Manholes-3177	399.25	Kirkland_Manholes-3178	398.25	237	0.42	8	PVC	0.01	458	0	8	8	1.7		
Kirkland_Main-3429	Kirkland_Manholes-3178	398.25	Kirkland_Manholes-3179	397.18	174.5	0.61	8	PVC	0.01	552	0	12	12	2.2		
Kirkland_Main-3430	Kirkland_Manholes-3179	397.18	Kirkland_Manholes-3180	396.32	145.5	0.59	8	PVC	0.01	542	0	16	16	2.9		
Kirkland_Main-3431	Kirkland_Manholes-3180	396.32	Kirkland_Manholes-3186	394.01	374.3	0.62	8	Ductile Iron	0.012	462	1	32	32	7	SM14-Ex-EX207	
Kirkland_Main-3432	Kirkland_Manholes-3186	394.01	Kirkland_Manholes-3187	393.39	93.6	0.66	8	Ductile Iron	0.012	478	1	36	37	7.7	SM14-Ex-EX207	
Kirkland_Main-3433	Kirkland_Manholes-3187	393.39	Kirkland_Manholes-3188	392.16	246.3	0.5	8	PVC	0.01	498	1	40	41	8.2		
Kirkland_Main-3434	Kirkland_Manholes-3185	403.06	Kirkland_Manholes-3184	397.63	317.3	1.71	8	PVC	0.01	922	0	4	4	0.4		
Kirkland_Main-3435	Kirkland_Manholes-3184	397.63	Kirkland_Manholes-3189	393.42	318.2	1.32	8	PVC	0.01	811	31	8	39	4.9		
Kirkland_Main-3436	Kirkland_Manholes-3189	393.42	Kirkland_Manholes-3188	392.16	76.3	1.65	8	PVC	0.01	906	31	16	47	5.2		
Kirkland_Main-3437	Kirkland_Manholes-3188	392.16	Kirkland_Manholes-1929	374.67	305.2	5.73	8	PVC	0.01	1,688	32	60	92	5.4		
Kirkland_Main-3438	Kirkland_Manholes-3192	307.27	Kirkland_Manholes-3191	306.22	126.1	0.84	8	PVC	0.01	644	1	4	5	0.7		
Kirkland_Main-3439	Kirkland_Manholes-3191	306.22	Kirkland_Manholes-2894	306.1	28.9	0.4	8	PVC	0.01	446	2	12	14	3		
Kirkland_Main-3440	Kirkland_Manholes-3190	323.62	Kirkland_Manholes-3191	306.22	169.1	10.29	8	PVC	0.01	2,262	1	4	5	0.2		
Kirkland_Main-3441	Kirkland_Manholes-620	55.37	Kirkland_Manholes-3193	49.78	279.6	2	8	PVC	0.01	997	0	8	8	0.8		
Kirkland_Main-3442	Kirkland_Manholes-3193	49.78	Kirkland_Manholes-619	48.43	193	0.7	8	PVC	0.01	590	0	16	17	2.8		
Kirkland_Main-3443	Kirkland_Manholes-1685	57.24	Kirkland_Manholes-731	53.54	120.6	3.07	12	PVC	0.01	3,640	88	457	545	15	SM5	
Kirkland_Main-3444	Kirkland_Manholes-1852	284.97	Kirkland_Manholes-3145	283.25	105.1	1.64	8	PVC	0.01	902	0	8	8	0.9		
Kirkland_Main-3445	Kirkland_Manholes-2130	161.57	O-31	156.67	31.5	15.55	8	Concrete	0.013	2,138	21	24	44	2.1	SM14-Ex-EX235	
Kirkland_Main-3446	Kirkland_Manholes-3195	259.3	Kirkland_Manholes-682	258.64	178.4	0.37	8	PVC	0.01	429	1	12	13	2.9		
Kirkland_Main-3447	Kirkland_Manholes-686	272.79	Kirkland_Manholes-3195	262.73	170.3	5.91	8	PVC	0.01	1,714	0	4	4	0.2		Drop Connection
Kirkland_Main-3448	Kirkland_Manholes-3194	260.3	Kirkland_Manholes-3195	259.3	92.2	1.08	8	PVC	0.01	733	0	4	4	0.5		
Kirkland_Main-3450	Kirkland_Manholes-3198	69.13	Kirkland_Manholes-2805	68.41	178.9	0.4	8	PVC	0.01	446	0	24	24	5.4		
Kirkland_Main-3451	Kirkland_Manholes-3197	131.57	Kirkland_Manholes-3196	122.5	306.9	2.96	8	PVC	0.01	1,212	1	8	10	0.8	SM10	
Kirkland_Main-3453	Kirkland_Manholes-2804	82.15	Kirkland_Manholes-3198	69.13	175.8	7.41	8	PVC	0.01	1,919	0	6	6	0.3		
Kirkland_Main-3454	Kirkland_Manholes-3200	88.54	Kirkland_Manholes-3199	84.4	128.7	3.22	8	PVC	0.01	1,264	0	6	6	0.5		
Kirkland_Main-3455	Kirkland_Manholes-3199	84.4	Kirkland_Manholes-3198	69.13	210.2	7.27	8	PVC	0.01	1,900	0	12	12	0.6		
Kirkland_Main-3456	Kirkland_Manholes-2778	255.64	Kirkland_Manholes-3201	243.59	148	8.14	8	PVC	0.01	2,012	19	16	35	1.7		
Kirkland_Main-3457	Kirkland_Manholes-3201	243.59	Kirkland_Manholes-2802	238.36	22.3	23.44	8	PVC	0.01	3,414	19	19	38	1.1		
Kirkland_Main-3458	Kirkland_Manholes-2641	88.89	Kirkland_Manholes-3202	66.61	82.1	27.14	8	PVC	0.01	3,673	5	24	30	0.8		
Kirkland_Main-3459	Kirkland_Manholes-3202	66.61	Kirkland_Manholes-3203	49.55	127.5	13.38	8	PVC	0.01	2,579	5	30	36	1.4		
Kirkland_Main-3461	Kirkland_Manholes-3204	163.55	Kirkland_Manholes-2130	161.57	74.1	2.67	8	PVC	0.01	1,153	1	4	5	0.4		
Kirkland_Main-3462	Kirkland_Manholes-3205	293.32	Kirkland_Manholes-1852	284.97	245.2	3.41	8	PVC	0.01	1,301	0	4	4	0.3		
Kirkland_Main-3463	Kirkland_Manholes-3206	505.9	Kirkland_Manholes-3207	502.85	330.6	0.92	8	PVC	0.01	677	1	4	5	0.7		
Kirkland_Main-3464	Kirkland_Manholes-3207	502.85	Kirkland_Manholes-3208	497.69	398.8	1.29	8	PVC	0.01	802	2	8	10	1.3		
Kirkland_Main-3465	Kirkland_Manholes-3208	497.69	Kirkland_Manholes-3209	497.22	90.8	0.52	8	PVC	0.01	507	2	12	14	2.8		
Kirkland_Main-3466	Kirkland_Manholes-3209	497.22	Kirkland_Manholes-3210	496.11	223.1	0.5	8	PVC	0.01	497	2	16	18	3.6		
Kirkland_Main-3467	Kirkland_Manholes-3210	496.11	Kirkland_Manholes-1494	496.1	92	0.01	8	PVC	0.01	74	2	20	22	30		
Kirkland_Main-3468	Kirkland_Manholes-3212	420.94	Kirkland_Manholes-3213	419.82	168.4	0.66	8	PVC	0.01	575	0	2	2	0.4		
Kirkland_Main-3469	Kirkland_Manholes-3213	419.82	Kirkland_Manholes-3214	418.95	128.5	0.68	8	PVC	0.01	580	0	5	5	0.8		
Kirkland_Main-3470	Kirkland_Manholes-3211	420.5	Kirkland_Manholes-3214	418.95	223.1	0.69	8	PVC	0.01	588	0	2	2	0.4		
Kirkland_Main-3471	Kirkland_Manholes-3214	418.95	Kirkland_Manholes-3215	418.25	213.6	0.33	8	PVC	0.01	404	0	9	9	2.3		
Kirkland_Main-3472	Kirkland_Manholes-3215	418.25	Kirkland_Manholes-3216	416.2	334.1	0.61	8	PVC	0.01	552	0	12	12	2.1		
Kirkland_Main-3473	Kirkland_Manholes-3216	416.2	Kirkland_Manholes-3217	414.96	329.2	0.38	8	PVC	0.01	433	0	14	14	3.2		
Kirkland_Main-3474	Kirkland_Manholes-3217	414.96	Kirkland_Manholes-3218	412.9	114.1	1.81	8	PVC	0.01	947	1	16	17	1.8		
Kirkland_Main-3475	Kirkland_Manholes-3218	412.9	Kirkland_Manholes-2906	405.37	172.8	4.36	8	PVC	0.01	1,472	1	19	20	1.3		

Existing - Peak Hour Flow - Pipe Capacity Table

Label	Upstream Node	Upstream Invert Elevation (ft)	Downstream Node	Downstream Invert Elevation (ft)	Length (ft)	Slope (%)	Diameter (in)	Material	Manning's n	Design Capacity (gpm)	Domestic Flow (gpm)	I/I Flow (gpm)	Total Flow (gpm)	Percent Full (%)	CIP No.	Notes
Kirkland_Main-3476	Kirkland_Manholes-718	150.12	Kirkland_Manholes-3219	149.17	95.4	1	8	PVC	0.01	703	50	79	128	18.2	SM14-2035-DF5	
Kirkland_Main-3477	Kirkland_Manholes-3219	149.17	Kirkland_Manholes-3220	148.71	120.2	0.38	8	PVC	0.01	436	50	84	134	30.7	SM14-2021-DF2	
Kirkland_Main-3478	Kirkland_Manholes-3220	148.71	Kirkland_Manholes-719	148.45	82.3	0.32	8	PVC	0.01	396	50	90	139	35.2	SM14-2021-DF2	
Kirkland_Main-3479	Kirkland_Manholes-3221	407.29	Kirkland_Manholes-3222	405.15	69.7	3.07	8	PVC	0.01	1,235	1	4	5	0.4		
Kirkland_Main-3480	Kirkland_Manholes-3222	405.15	Kirkland_Manholes-1363	403.55	104.8	1.53	8	PVC	0.01	871	2	8	10	1.2		
Kirkland_Main-3481	Kirkland_Manholes-3223	405.2	Kirkland_Manholes-3224	400.94	146.9	2.9	8	PVC	0.01	1,201	1	4	5	0.4		
Kirkland_Main-3482	Kirkland_Manholes-3225	409.6	Kirkland_Manholes-3224	400.94	369	2.35	8	PVC	0.01	1,080	1	4	5	0.5		
Kirkland_Main-3483	Kirkland_Manholes-3224	400.94	Kirkland_Manholes-3226	396.71	176	2.4	8	PVC	0.01	1,093	2	12	14	1.3		
Kirkland_Main-3484	Kirkland_Manholes-3226	396.71	Kirkland_Manholes-2992	396.35	10.8	3.34	8	PVC	0.01	1,289	2	16	18	1.4		
Kirkland_Main-3485	Kirkland_Manholes-3227	308.86	Kirkland_Manholes-3228	299.55	189.6	4.91	8	PVC	0.01	1,562	1	4	5	0.3		
Kirkland_Main-3486	Kirkland_Manholes-3228	299.55	Kirkland_Manholes-3229	296.76	44.7	6.24	8	PVC	0.01	1,761	1	8	9	0.5		
Kirkland_Main-3487	Kirkland_Manholes-3229	296.76	Kirkland_Manholes-2901	294.77	63.1	3.16	8	PVC	0.01	1,252	1	12	13	1		
Kirkland_Main-3488	Kirkland_Manholes-3230	157.83	Kirkland_Manholes-3231	156.85	192.6	0.51	8	PVC	0.01	503	0	6	6	1.1		
Kirkland_Main-3489	Kirkland_Manholes-3231	156.85	Kirkland_Manholes-3232	156.12	91	0.8	8	PVC	0.01	632	7	11	19	3		
Kirkland_Main-3490	Kirkland_Manholes-3232	156.12	Kirkland_Manholes-716	152.58	36.4	9.73	8	PVC	0.01	2,199	7	17	24	1.1		
Kirkland_Main-3492	Kirkland_Manholes-3233	197.29	Kirkland_Manholes-1117	196.58	41.1	1.73	15	PVC	0.01	4,957	16	4	20	0.4		
Kirkland_Main-3493	Kirkland_Manholes-3235	436.7	Kirkland_Manholes-2008	435.7	179.8	0.56	8	PVC	0.01	526	2	8	10	2		
Kirkland_Main-3494	Kirkland_Manholes-3234	236.42	Kirkland_Manholes-1249	223.25	243.5	5.41	8	Concrete	0.013	1,261	15	91	105	8.3	SM14-Ex-EX65	
Kirkland_Main-3495	Kirkland_Manholes-1247	236.99	Kirkland_Manholes-3234	236.42	76.3	0.75	8	Concrete	0.013	469	13	74	87	18.5	SM14-Ex-EX65	
Kirkland_Main-3496	Kirkland_Manholes-3237	442.96	Kirkland_Manholes-3235	436.7	126.7	4.94	8	PVC	0.01	1,567	1	4	5	0.3		
Kirkland_Main-3497	Kirkland_Manholes-3242	314.11	Kirkland_Manholes-3243	305.45	217.3	3.98	8	PVC	0.01	1,407	0	4	4	0.3		
Kirkland_Main-3498	Kirkland_Manholes-3243	305.45	Kirkland_Manholes-2372	304.48	24.4	3.99	8	PVC	0.01	1,408	0	8	8	0.6		
Kirkland_Main-3499	Kirkland_Manholes-3241	300.47	Kirkland_Manholes-3240	289.24	289.6	3.88	8	PVC	0.01	1,388	2	4	6	0.4		
Kirkland_Main-3500	Kirkland_Manholes-3240	289.24	Kirkland_Manholes-3239	288.78	114.9	0.4	8	PVC	0.01	446	2	8	10	2.1		
Kirkland_Main-3501	Kirkland_Manholes-3239	288.78	Kirkland_Manholes-3238	285.43	95.5	3.51	8	PVC	0.01	1,321	2	12	14	1		
Kirkland_Main-3502	Kirkland_Manholes-263	292.03	Kirkland_Manholes-3238	285.43	114.2	5.78	8	Concrete	0.013	1,304	29	99	128	9.9	SM14-Ex-EX252	
Kirkland_Main-3503	Kirkland_Manholes-3238	285.43	Kirkland_Manholes-2327	280.44	83.6	5.97	8	Concrete	0.013	1,325	31	115	147	11.1	SM14-Ex-EX252	
Kirkland_Main-3505	Kirkland_Manholes-3236	241.89	Kirkland_Manholes-3234	236.42	154.2	3.55	8	PVC	0.01	1,328	1	8	10	0.7		
Kirkland_Main-3506	Kirkland_Manholes-2486	152.49	O-35	152.05	116.8	0.38	8	Concrete	0.013	333	39	127	166	49.8	SM14-Ex-EX239	
Other_System_Main-6	MH-320	399.28	Kirkland_Manholes-3177	399.25	69.1	0.04	6	PVC	0.01	64	0	4	4	6.2		
Other_System_Main-7	MH-317	393.56	Kirkland_Manholes-3189	393.42	34.5	0.4	8	PVC	0.01	446	0	4	4	0.9		
Other_System_Main-8	MH-326	162.67	MH-323	161.73	233.9	0.4	8	PVC	0.01	446	0	4	4	0.9		
Other_System_Main-9	MH-323	161.73	Kirkland_Manholes-3166	161.38	88.4	0.4	6	PVC	0.01	207	8	8	16	7.6		
SS_Main_Selection_06-13-2016-1	MH 05-714	24.7	MH_Selection_06-13-2016-2	24.58	51.6	0.23	24	Ductile Iron	0.012	5,304	796	3,464	5,845	110.2	SM9	Updated per as-built drawings
SS_Main_Selection_06-13-2016-11	MH_Selection_06-13-2016-4	21.4	MH_Selection_06-13-2016-10	20.85	62.6	0.88	48	Concrete	0.013	60,432	1,045	4,082	6,712	11.1		Updated per as-built drawings
SS_Main_Selection_06-13-2016-12	MH_Selection_06-13-2016-10	20.85	MH_Selection_06-13-2016-11	20.7	78.4	0.19	48	Concrete	0.013	28,192	1,045	4,082	6,712	23.8		Updated per as-built drawings
SS_Main_Selection_06-13-2016-2	MH_Selection_06-13-2016-3	22.2	MH_Selection_06-13-2016-4	21.4	166.2	0.48	48	Concrete	0.013	44,726	796	3,464	5,845	13.1		Updated per as-built drawings
SS_Main_Selection_06-13-2016-3	MH_Selection_06-13-2016-2	24.22	MH_Selection_06-13-2016-6	24.16	7.3	0.82	24	PVC	0.013	9,175	796	3,464	5,845	63.7	SM9	Updated per as-built drawings
SS_Main_Selection_06-13-2016-4	MH_Selection_06-13-2016-6	24.16	MH_Selection_06-13-2016-7	23.6	28.1	1.99	24	PVC	0.013	14,333	796	3,464	5,845	40.8	SM9	Updated per as-built drawings
SS_Main_Selection_06-13-2016-5	MH_Selection_06-13-2016-7	23.5	MH_Selection_06-13-2016-8	22.81	32.8	2.11	48	Concrete	0.013	93,567	796	3,464	5,845	6.2		Updated per as-built drawings
SS_Main_Selection_06-13-2016-6	MH_Selection_06-13-2016-8	22.81	MH_Selection_06-13-2016-9	22.44	14.9	2.49	48	Concrete	0.013	101,749	796	3,464	5,845	5.7		Updated per as-built drawings
SS_Main_Selection_06-13-2016-7	MH_Selection_06-13-2016-9	22.44	MH_Selection_06-13-2016-3	22.2	69.4	0.35	48	Concrete	0.013	37,907	796	3,464	5,845	15.4		Updated per as-built drawings
SS_Main_Selection_06-13-2016-9	MH_Selection_06-13-2016-5	24.55	MH_Selection_06-13-2016-11	23.6	12.8	7.44	12	PVC	0.013	4,360.77	101.33	139.964	241.293	5.5		Updated per as-built drawings

Existing - Peak Hour Flow - Pump Table

Label	Status	Pump Definition	Pumped Flow (gpm)	Pump Head (ft)	Notes
PLAZA_PUMP	On	LAKE PLAZA	1,303	44.9	
ROSEPT_PUMP	On	ROSE PT LANE	301	65.8	
SOUTHBAY_PUMP	On	SOUTH BAY	180	190.0	
TREND_PUMP	On	TREND	176	25.0	
WAVERLY_PUMP	On	WAVERLY PARK	282	103.9	
YARROWBAYII_PUMP	On	YARROW POINT	72	45.8	

Existing - Peak Hour Flow - Wet Well Table

Label	Ground Elevation (ft)	Maximum Elevation (ft)	Initial Elevation (ft)	Minimum Elevation (ft)	Base Elevation (ft)	Flow In (gpm)	Flow Out (gpm)	Net Flow In (gpm)	Notes
PLAZA_WW	21.95	10	6.5	2	0	1,286	1,303	-17	
ROSEPT_WETWELL	28.91	28	12	11	10	138	301	-163	
SOUTHBAY_WETWELL	42.96	26.5	25	24	22	37	180	-143	
TREND_WETWELL	340.3	330	330	321.5	317.75	102	176	-75	
WAVERLY_WETWELL	27	10	2	1	0	321	282	38	
YARROW POINT_WETWELL	32.18	20	8	6	6	58	72	-13	

Existing with Proposed Improvements - Peak Hour Flow - Pipe Capacity Table

Label	Upstream Node	Upstream Invert Elevation (ft)	Downstream Node	Downstream Invert Elevation (ft)	Length (ft)	Slope (%)	Diameter (in)	Material	Manning's n	Design Capacity (gpm)	Domestic Flow (gpm)	I/I Flow (gpm)	Total Flow (gpm)	Percent Full (%)	CIP No.	Notes
Basin 3	Kirkland_Manholes-3128	323.94	Kirkland_Manholes-3129	308.71	343.2	4.44	8	PVC	0.01	1,485	0	8	8	0.6		
CO-1	Kirkland_Manholes-293	22.09	Kirkland_Manholes-310	21.69	516.5	0.08	12	PVC	0.01	578	1	18	18	3.2	SM14-Ex-EX37	
CO-2	Kirkland_Manholes-310	21.69	Kirkland_Manholes-311	21.29	254.7	0.16	12	PVC	0.01	824	3	27	30	3.6	SM14-Ex-EX37	
CO-6	Kirkland_Manholes-1496	491.57	Kirkland_Manholes-1461	483.24	408.5	2.04	8	PVC	0.01	1,007	0	4	4	0.4		
CO-8	Kirkland_Manholes-1271	222.62	Kirkland_Manholes-1272	197.83	531.9	4.66	8	PVC	0.01	1,522	0	8	8	0.6		
CO-9	Kirkland_Manholes-1272	197.83	Kirkland_Manholes-1273	182.86	225.5	6.64	8	PVC	0.01	1,817	3	16	20	1.1		
CO-11	Kirkland_Manholes-3102	53.77	Kirkland_Manholes-2664	53.2	380.4	0.15	18	PVC	0.01	2,372	121	401	522	22	SM14-Ex-EX222	
CO-13	Kirkland_Manholes-2664	53.2	Kirkland_Manholes-2204	53	65.8	0.3	18	PVC	0.01	3,378	121	407	528	15.6	SM14-Ex-EX222	
CO-14	Kirkland_Manholes-2204	53	Kirkland_Manholes-3101	52.44	123.2	0.45	18	PVC	0.01	4,132	124	425	549	13.3	SM14-Ex-EX222	
CO-15	Kirkland_Manholes-978	222.9	Kirkland_Manholes-979	219.9	335.8	0.89	8	PVC	0.01	666	8	51	59	8.8		
CO-17	Kirkland_Manholes-979	219.9	MH-327	219.64	97.4	0.27	8	PVC	0.01	364	8	55	63	17.4		
CO-18	MH-327	219.64	Kirkland_Manholes-980	219.4	90.3	0.27	8	PVC	0.01	364	12	64	76	20.8		
CO-19	Kirkland_Manholes-1011	226.35	MH-327	219.64	167.6	4	8	PVC	0.01	1,411	4	4	8	0.6		
CO-20	Kirkland_Manholes-1907	380.32	Kirkland_Manholes-1909	380	67.5	0.47	8	PVC	0.01	485	17	12	29	6		
CO-21	Kirkland_Manholes-1909	380	Kirkland_Manholes-1366	377.95	352.1	0.58	8	PVC	0.01	538	43	75	118	22		
CO-22	Kirkland_Manholes-638	236.51	Kirkland_Manholes-637	235.38	223.4	0.51	21	PVC	0.01	6,576	454	1,534	1,987	30.2		
CO-23	Kirkland_Manholes-637	235.38	Kirkland_Manholes-633	234.78	246.2	0.24	21	PVC	0.01	4,564	458	1,538	1,995	43.7		
CO-25	Kirkland_Manholes-2644	74.88	Kirkland_Manholes-2655	44.22	203.4	15.07	8	PVC	0.01	2,737	12	73	85	3.1		
CO-26	Kirkland_Manholes-2642	102.55	MH-328	82.65	111.2	17.89	8	PVC	0.01	2,982	1	12	13	0.5		
CO-27	MH-328	82.65	Kirkland_Manholes-2644	74.88	76.8	10.12	8	PVC	0.01	2,242	4	30	35	1.5		
CO-28	Kirkland_Manholes-3144	94.3	Kirkland_Manholes-3143	93.65	162.7	0.4	8	PVC	0.01	446	2	6	9	1.9	SM14-Ex-EX293	
CO-29	Kirkland_Manholes-3143	93.65	MH-328	82.65	108.8	10.11	8	PVC	0.01	2,242	3	12	15	0.7	SM14-Ex-EX293	
CO-30	Kirkland_Manholes-2662	11.52	Kirkland_Manholes-2661	11.28	48.5	0.49	18	PVC	0.01	4,311	229	601	830	19.3	SM14-Ex-EX289	
CO-31	Kirkland_Manholes-2661	11.28	Kirkland_Manholes-2851	10.8	93.8	0.51	18	PVC	0.01	4,385	254	777	1,031	23.5	SM14-Ex-EX289	
CO-32	Kirkland_Manholes-3203	49.55	Kirkland_Manholes-2660	26.87	244.8	9.27	8	PVC	0.01	2,146	6	36	42	2		
CO-33	Kirkland_Manholes-2660	26.87	Kirkland_Manholes-2661	11.28	44	35.46	8	PVC	0.01	4,198	25	170	195	4.6		
CO-34	Kirkland_Manholes-2221	60.29	Kirkland_Manholes-2225	40.46	244.8	8.1	8	PVC	0.01	2,007	11	52	63	3.1		
CO-35	Kirkland_Manholes-2225	40.46	Kirkland_Manholes-2228	25	165.9	9.32	8	PVC	0.01	2,152	18	71	89	4.2		Drop Connection
CO-36	Kirkland_Manholes-2081	95.66	Kirkland_Manholes-2218	82.71	188.1	6.88	8	PVC	0.01	1,850	1	6	7	0.4		
CO-37	Kirkland_Manholes-2218	82.71	Kirkland_Manholes-2221	60.29	246.5	9.1	8	PVC	0.01	2,126	7	26	33	1.6		
CO-38	Kirkland_Manholes-2227	45.3	Kirkland_Manholes-2226	43.3	93.8	2.13	8	PVC	0.01	1,029	2	6	9	0.8		
CO-39	Kirkland_Manholes-2226	43.3	Kirkland_Manholes-2225	40.46	248.3	1.14	8	PVC	0.01	754	6	13	19	2.5		
CO-41	Kirkland_Manholes-1046	162.86	Kirkland_Manholes-3175	156.47	218.7	2.92	8	PVC	0.01	1,205	74	277	352	29.2		
CO-42	Kirkland_Manholes-1043	180.32	Kirkland_Manholes-3126	177.5	189.3	1.49	8	PVC	0.01	861	26	98	124	14.4		
CO-43	Kirkland_Manholes-3126	177.5	Kirkland_Manholes-1046	162.86	197.5	7.41	8	PVC	0.01	1,920	28	111	139	7.2		
CO-44	Kirkland_Manholes-61	205.17	Kirkland_Manholes-64	204.5	110.3	0.61	8	PVC	0.01	550	8	30	38	6.8	SM14-Ex-EX6	
CO-45	Kirkland_Manholes-64	204.5	Kirkland_Manholes-65	199.61	323.5	1.51	8	PVC	0.01	867	10	34	44	5.1	SM14-Ex-EX6	
CO-47	Kirkland_Manholes-2410	409.57	Kirkland_Manholes-2408	405.44	108.3	3.82	8	PVC	0.01	1,377	0	4	4	0.3		
CO-48	Kirkland_Manholes-2135	110	Kirkland_Manholes-2156	109.44	35	1.6	8	PVC	0.01	892	8	32	40	4.5		
CO-49	Kirkland_Manholes-2156	109.44	Kirkland_Manholes-2157	100.18	171	5.42	8	PVC	0.01	1,641	8	39	47	2.9		
CO-50	Kirkland_Manholes-2190	132.39	Kirkland_Manholes-2189	112.21	288.2	7	8	PVC	0.01	1,866	6	25	30	1.6		
CO-51	Kirkland_Manholes-2189	112.21	Kirkland_Manholes-2186	104.5	321.1	2.4	8	PVC	0.01	1,092	11	33	44	4		
CO-52	Kirkland_Manholes-2169	142.85	Kirkland_Manholes-2168	127.32	219.5	7.07	8	PVC	0.01	1,875	1	16	18	0.9	SM14-Ex-EX193	
CO-53	Kirkland_Manholes-2168	127.32	Kirkland_Manholes-2167	120.69	65.4	10.14	8	PVC	0.01	2,245	2	25	27	1.2	SM14-Ex-EX193	
CO-54	Kirkland_Manholes-2165	94.99	Kirkland_Manholes-2164	90.37	91.4	5.05	8	PVC	0.01	1,585	8	49	57	3.6		
CO-55	Kirkland_Manholes-2164	90.37	Kirkland_Manholes-2140	88.47	43.9	4.33	8	PVC	0.01	1,468	8	58	66	4.5		
CO-56	Kirkland_Manholes-1703	58	Kirkland_Manholes-1704	54.53	111.1	3.12	8	PVC	0.01	1,246	5	16	22	1.7	SM14-Ex-EX153	
CO-57	Kirkland_Manholes-1704	54.53	Kirkland_Manholes-1705	33.28	211.8	10.03	8	PVC	0.01	2,233	5	25	30	1.3	SM14-Ex-EX153	
CO-58	Kirkland_Manholes-1810	85.96	Kirkland_Manholes-1808	66.8	280.2	6.84	8	PVC	0.01	1,844	65	286	351	19.1	SM4	
CO-59	Kirkland_Manholes-1808	66.8	Kirkland_Manholes-1807	44.26	183.9	12.26	8	PVC	0.01	2,469	66	294	360	14.6	SM4	
CO-60	Kirkland_Manholes-1718	72.96	Kirkland_Manholes-1717	58.55	301.8	4.77	8	PVC	0.01	1,541	1	8	9	0.6	SM14-Ex-EX165	
CO-61	Kirkland_Manholes-1717	58.55	Kirkland_Manholes-1719	46.02	243.6	5.14	8	PVC	0.01	1,599	26	49	75	4.7	SM14-Ex-EX165	
CO-62	Kirkland_Manholes-1605	146.86	Kirkland_Manholes-1606	138.24	64.3	13.41	8	PVC	0.01	2,582	0	8	8	0.3	SM14-Ex-EX120	
CO-63	Kirkland_Manholes-1606	138.24	Kirkland_Manholes-1604	117.22	209.3	10.04	8	PVC	0.01	2,234	0	16	16	0.7	SM14-Ex-EX120	
CO-64	Kirkland_Manholes-3029	503.06	Kirkland_Manholes-1462	498.98	186.9	2.18	8	PVC	0.01	1,042	1	4	5	0.5	SM14-Ex-EX273	
CO-66	Kirkland_Manholes-1468	502.5	Kirkland_Manholes-1462	498.98	381.4	0.92	8	PVC	0.01	677	2	4	6	0.9	SM14-Ex-EX271	
CO-67	Kirkland_Manholes-1462	498.98	Kirkland_Manholes-1463	498.43	46.4	1.18	8	PVC	0.01	767	4	12	16	2.1	SM14-Ex-EX271	
CO-69	Kirkland_Manholes-1251	198.9	Kirkland_Manholes-1252	181.71	334.6	5.14	8	PVC	0.01	1,598	29	156	185	11.6	SM14-Ex-EX101	
CO-70	Kirkland_Manholes-1250	210.15	Kirkland_Manholes-1251	198.9	400	2.81	8	PVC	0.01	1,182	22	140	162	13.7	SM14-Ex-EX101	
CO-71	Kirkland_Manholes-1310	231.57	Kirkland_Manholes-1251	198.9	267.1	12.23	8	PVC	0.01	2,466	3	8	11	0.4	SM14-Ex-EX99	
CO-72	Kirkland_Manholes-230	172.81	Kirkland_Manholes-228	142.32	167.5	18.2	8	PVC	0.01	3,008	42	119	161	5.4		
CO-73	Kirkland_Manholes-3115	187.58	Kirkland_Manholes-228	142.32	414	10.93	8	PVC	0.01	2,331	2	4	7	0.3		

Existing with Proposed Improvements - Peak Hour Flow - Pipe Capacity Table

Label	Upstream Node	Upstream Invert Elevation (ft)	Downstream Node	Downstream Invert Elevation (ft)	Length (ft)	Slope (%)	Diameter (in)	Material	Manning's n	Design Capacity (gpm)	Domestic Flow (gpm)	I/I Flow (gpm)	Total Flow (gpm)	Percent Full (%)	CIP No.	Notes
CO-74	Kirkland_Manholes-1287	140.18	Kirkland_Manholes-1288	139.29	58.2	1.53	8	PVC	0.01	872	29	165	194	22.2	SM14-Ex-EX105	
CO-75	Kirkland_Manholes-1288	139.29	Kirkland_Manholes-1289	131.61	344.5	2.23	8	PVC	0.01	1,053	32	173	205	19.5	SM14-Ex-EX105	
CO-77	Kirkland_Manholes-1255	163.1	Kirkland_Manholes-1256	151.53	106.9	10.82	8	PVC	0.01	2,319	4	33	37	1.6	SM14-Ex-EX104	
CO-78	Kirkland_Manholes-1253	189.17	MH-329	183.73	57.5	9.46	8	PVC	0.01	2,169	1	8	9	0.4	SM14-Ex-EX104	
CO-80	Kirkland_Manholes-1254	186	MH-329	183.73	30.2	7.52	8	PVC	0.01	1,934	2	8	10	0.5	SM14-Ex-EX104	
CO-81	MH-329	183.73	Kirkland_Manholes-1255	163.1	274.1	7.53	8	PVC	0.01	1,934	3	25	28	1.4	SM14-Ex-EX104	
CO-83	Kirkland_Manholes-279	76.14	Kirkland_Manholes-278	56.62	239.7	8.14	8	PVC	0.01	2,012	28	6	35	1.7	SM10	
CO-84	Kirkland_Manholes-271	91.78	Kirkland_Manholes-272	84	313.5	2.48	8	PVC	0.01	1,111	48	130	178	16	SM10	If flow exceeds capacity, overflow MH will be activated; model appropriately.
CO-85	Kirkland_Manholes-272	84	Kirkland_Manholes-273	69.52	161.1	8.99	8	PVC	0.01	2,114	50	134	184	8.7	SM10	
CO-89	Kirkland_Manholes-1221	265	Kirkland_Manholes-1210	257.02	313.6	2.54	8	PVC	0.01	1,125	4	14	19	1.7	SM14-Ex-EX90	
CO-90	Kirkland_Manholes-1208	237.71	Kirkland_Manholes-1207	214.35	271	8.62	8	PVC	0.01	2,070	12	39	51	2.5	SM14-Ex-EX90	
CO-91	Kirkland_Manholes-1207	214.35	Kirkland_Manholes-1206	193.92	362.6	5.63	8	PVC	0.01	1,673	15	47	62	3.7	SM14-Ex-EX90	
CO-92	Kirkland_Manholes-1142	218.06	Kirkland_Manholes-1146	215.3	316.4	0.87	8	PVC	0.01	659	8	33	41	6.3	SM4	
CO-93	Kirkland_Manholes-1223	241.1	Kirkland_Manholes-1146	215.3	349.8	7.38	8	PVC	0.01	1,915	3	8	11	0.6	SM14-Ex-EX86	
CO-94	Kirkland_Manholes-1199	190.02	Kirkland_Manholes-1198	189.72	153.8	0.19	8	PVC	0.01	311	8	8	17	5.4	SM14-Ex-EX80	
CO-95	Kirkland_Manholes-1141	204.1	Kirkland_Manholes-1198	189.72	107.3	13.4	8	PVC	0.01	2,581	5	33	37	1.5	SM14-Ex-EX80	
CO-96	Kirkland_Manholes-3104	114.41	Kirkland_Manholes-3103	113.84	31.2	1.83	8	PVC	0.01	953	15	107	122	12.9	SM10	
CO-97	Kirkland_Manholes-517	138.64	Kirkland_Manholes-3103	113.84	358.5	6.92	8	PVC	0.01	1,854	1	8	9	0.5	SM10	
CO-98	Kirkland_Manholes-3196	122.5	Kirkland_Manholes-503	118	198.4	2.27	8	PVC	0.01	1,062	3	16	19	1.8	SM10	
CO-100	Kirkland_Manholes-503	118	Kirkland_Manholes-504	108.24	276.3	3.53	8	PVC	0.01	1,325	4	25	28	2.1	SM14-Ex-EX78	
CO-101	Kirkland_Manholes-504	108.24	Kirkland_Manholes-510	78.8	269.3	10.93	8	PVC	0.01	2,331	5	33	38	1.6	SM14-Ex-EX78	
CO-102	Kirkland_Manholes-2573	298.95	Kirkland_Manholes-2572	298.88	17.9	0.4	8	PVC	0.01	446	2	16	18	4.1		
CO-103	Kirkland_Manholes-2959	355.76	Kirkland_Manholes-2572	298.88	327.6	17.36	8	PVC	0.01	2,938	1	4	5	0.2		
CO-104	Kirkland_Manholes-2783	269.77	Kirkland_Manholes-2784	262.56	166.7	4.32	8	PVC	0.01	1,466	6	40	45	3.1		
CO-105	Kirkland_Manholes-2578	278.46	Kirkland_Manholes-2783	269.77	170.6	5.09	8	PVC	0.01	1,591	5	36	41	2.6		
CO-106	Kirkland_Manholes-2921	73.76	Kirkland_Manholes-2920	63.77	70.3	14.2	8	PVC	0.01	2,657	2	17	19	0.7		
CO-107	Kirkland_Manholes-2920	63.77	Kirkland_Manholes-177	35.5	126.7	22.31	8		0.012	2,775	3	21	24	0.9		
CO-109	Kirkland_Manholes-2881	265.95	Kirkland_Manholes-1221	265	237.1	0.4	8	PVC	0.01	446	2	6	8	1.8	SM14-Ex-EX90	
CO-110	Kirkland_Manholes-2686	221.84	Kirkland_Manholes-2690	217.58	240.3	1.77	8	PVC	0.01	939	10	32	42	4.5	SM14-Ex-EX201	
CO-111	Kirkland_Manholes-2690	217.58	Kirkland_Manholes-2691	211.09	233.1	2.78	8	PVC	0.01	1,176	11	36	47	4	SM14-Ex-EX201	
CO-112	Kirkland_Manholes-2612	250.12	Kirkland_Manholes-2613	203.91	357.8	12.91	8	PVC	0.01	2,534	4	8	12	0.5	SM14-Ex-EX297	
CO-113	Kirkland_Manholes-2613	203.91	Kirkland_Manholes-3164	171.21	256.4	12.76	8	PVC	0.01	2,518	6	12	18	0.7	SM14-Ex-EX297	
CO-114	Kirkland_Manholes-488	256.69	Kirkland_Manholes-489	206.41	218.5	23.01	8	PVC	0.01	3,382	1	4	5	0.2		
CO-115	Kirkland_Manholes-834	245.56	Kirkland_Manholes-489	206.41	278.5	14.06	8	PVC	0.01	2,644	2	4	6	0.2		
CO-116	Kirkland_Manholes-599	92.8	Kirkland_Manholes-600	91.95	330.6	0.26	8	PVC	0.01	357	1	16	18	4.9	SM14-Ex-EX160	
CO-120	Kirkland_Manholes-601	92.05	Kirkland_Manholes-602	90.22	280.5	0.65	8	PVC	0.01	569	10	16	27	4.7	SM14-Ex-EX160	
CO-123	Kirkland_Manholes-603	94.89	Kirkland_Manholes-604	92.41	322.7	0.77	8	PVC	0.01	618	2	4	6	1	SM14-Ex-EX160	
CO-124	Kirkland_Manholes-594	105.16	Kirkland_Manholes-595	103.44	177	0.97	12	PVC	0.01	2,049	1	8	9	0.5	SM14-Ex-EX116	
CO-125	MH-321	218.02	MH-322	217.7	80.6	0.4	8	PVC	0.01	446	1	4	5	1.2		
CO-126	MH-322	217.7	Kirkland_Manholes-2446	217.36	85	0.4	8	PVC	0.01	446	2	8	10	2.3		
CO-127	MH-315	235.18	MH-316	235.06	29.4	0.41	6	Concrete	0.013	161	1	4	5	2.9		
CO-128	MH-316	235.06	Kirkland_Manholes-2602	234.19	216.7	0.4	8	PVC	0.01	446	1	8	9	2.1	SM14-Ex-EX300	
CO-130	MH-330	93.13	Kirkland_Manholes-601	92.05	270.2	0.4	8	PVC	0.01	446	0	8	9	1.9	SM14-Ex-EX160	
CO-133	Kirkland_Manholes-2269	398.2	Kirkland_Manholes-2266	392.8	346.8	1.56	8	PVC	0.01	880	19	103	122	13.9	SM14-Ex-EX261	
CO-139	Kirkland_Manholes-2703	250.19	MH-333	250.73	32.9	1.64	8	PVC	0.01	904	2	12	14	1.6		
CO-140	MH-333	250.73	MH-334	252.1	150.3	0.91	8	PVC	0.01	673	1	8	9	1.4		
CO-141	MH-334	252.1	MH-335	253.55	221.6	0.65	8	PVC	0.01	570	1	4	5	0.8		
CO-142	Kirkland_Manholes-2881	265.95	Kirkland_Manholes-1214	261.31	224.5	2.07	8	PVC	0.01	1,013	2	6	8	0.8	SM14-Ex-EX90	
CO-143	Kirkland_Manholes-2593	284.96	Kirkland_Manholes-2604	283.17	324.7	0.55	8	PVC	0.01	524	24	91	0	0	SM14-Ex-EX299	
CO-148	Kirkland_Manholes-603	94.89	Kirkland_Manholes-602	90.22	228.3	2.05	8	PVC	0.01	1,008	2	4	6	0.6	SM14-Ex-EX160	
CO-149	MH-336	98.65	Kirkland_Manholes-276	92.16	227.3	2.86	8	PVC	0.01	1,191	0	3	3	0.3	SM10	
CO-150	MH-337	92.45	Kirkland_Manholes-279	76.14	213.9	7.63	8	PVC	0.01	1,947	0	3	3	0.2	SM10	
CO-151	MH-338	119.57	Kirkland_Manholes-308	114.39	316.2	1.64	8	PVC	0.01	902	0	9	9	1	SM10	
CO-152	MH-339	159.67	Kirkland_Manholes-524	157.52	274.1	0.78	8	PVC	0.01	624	0	8	8	1.3	SM10	
CO-154	MH_Selection_06-13-2016-11	20.6	O-26	20.25	45	0.78	48	Concrete	0.013	56,862	1,146	4,222	7,021	12.3		Updated per as-built drawings
KC_Main-2	KC_Manholes-18	10.29	KC_Manholes-19	10.24	10.1	0.5	24	PVC	0.01	9,299	734	2,048	2,854	30.7	SM14-Ex-EX289	
KC_Main-28	KC_Manholes-19	10.24	O-6	10	47.9	0.5	24	PVC	0.01	9,344	782	2,054	2,908	31.1	SM14-Ex-EX289	
Kirkland_Main-1	Kirkland_Manholes-2	142.59	Kirkland_Manholes-3	141.09	316.3	0.47	8	PVC	0.01	486	0	1	1	0.3		
Kirkland_Main-2	Kirkland_Manholes-4	139.47	Kirkland_Manholes-5	138.65	146.8	0.56	8	PVC	0.01	527	14	4	19	3.5		
Kirkland_Main-3	Kirkland_Manholes-3	141.09	Kirkland_Manholes-4	139.47	325.9	0.5	8	PVC	0.01	497	14	3	17	3.4		
Kirkland_Main-4	Kirkland_Manholes-6	127.8	Kirkland_Manholes-7	127.07	145	0.5	8	PVC	0.01	500	15	7	23	4.5		

Existing with Proposed Improvements - Peak Hour Flow - Pipe Capacity Table

Label	Upstream Node	Upstream Invert Elevation (ft)	Downstream Node	Downstream Invert Elevation (ft)	Length (ft)	Slope (%)	Diameter (in)	Material	Manning's n	Design Capacity (gpm)	Domestic Flow (gpm)	I/I Flow (gpm)	Total Flow (gpm)	Percent Full (%)	CIP No.	Notes
Kirkland_Main-5	Kirkland_Manholes-5	138.65	Kirkland_Manholes-6	127.8	166.2	6.53	8	PVC	0.01	1,801	15	6	21	1.1		
Kirkland_Main-6	Kirkland_Manholes-8	108.29	Kirkland_Manholes-9	99.39	204.3	4.36	8	PVC	0.01	1,471	16	12	28	1.9		
Kirkland_Main-7	Kirkland_Manholes-7	127.07	Kirkland_Manholes-8	108.29	154	12.2	8	PVC	0.01	2,462	16	10	27	1.1		
Kirkland_Main-8	Kirkland_Manholes-9	99.39	Kirkland_Manholes-99	74.09	252.3	10.03	8	PVC	0.01	2,233	58	13	71	3.2		
Kirkland_Main-10	Kirkland_Manholes-10	249.23	Kirkland_Manholes-11	247.5	365.2	0.47	8	PVC	0.01	485	1	4	4	0.9		
Kirkland_Main-11	Kirkland_Manholes-11	247.5	Kirkland_Manholes-12	246.57	355.7	0.26	8	PVC	0.01	360	2	8	10	2.8		
Kirkland_Main-12	Kirkland_Manholes-12	246.57	Kirkland_Manholes-650	246.28	73.5	0.4	8	PVC	0.01	446	2	12	14	3.1		
Kirkland_Main-13	Kirkland_Manholes-13	266.08	Kirkland_Manholes-917	265.16	206.5	0.45	8	PVC	0.01	471	0	4	4	0.9		
Kirkland_Main-14	Kirkland_Manholes-14	260.99	Kirkland_Manholes-15	248.41	274.7	4.58	8	PVC	0.01	1,509	1	4	5	0.3		
Kirkland_Main-15	Kirkland_Manholes-16	249.63	Kirkland_Manholes-15	248.41	56	2.18	8	PVC	0.01	1,041	16	75	91	8.8		
Kirkland_Main-16	Kirkland_Manholes-17	247.29	Kirkland_Manholes-650	246.28	284.1	0.36	8	PVC	0.01	420	19	87	107	25.3		
Kirkland_Main-17	Kirkland_Manholes-3034	97.65	Kirkland_Manholes-3033	93.75	20	19.51	8	PVC	0.01	3,114	0	4	5	0.1		
Kirkland_Main-18	Kirkland_Manholes-3033	93.75	Kirkland_Manholes-3032	86.58	55.1	13.01	8	PVC	0.01	2,543	0	9	9	0.3		
Kirkland_Main-19	Kirkland_Manholes-3032	86.58	Kirkland_Manholes-22	82.71	39.7	9.76	8	PVC	0.01	2,202	0	13	13	0.6		
Kirkland_Main-20	Kirkland_Manholes-22	82.71	Kirkland_Manholes-1	73.25	125.9	7.51	8	PVC	0.01	1,932	1	17	18	0.9		
Kirkland_Main-21	Kirkland_Manholes-15	248.41	Kirkland_Manholes-17	247.29	382.5	0.29	8	PVC	0.01	382	17	83	100	26.3		
Kirkland_Main-22	Kirkland_Manholes-18	254.35	Kirkland_Manholes-16	249.63	106.2	4.45	8	PVC	0.01	1,487	15	72	86	5.8		
Kirkland_Main-23	Kirkland_Manholes-19	254.88	Kirkland_Manholes-18	254.35	102.4	0.52	8	PVC	0.01	507	14	68	81	16		
Kirkland_Main-24	Kirkland_Manholes-23	269.98	Kirkland_Manholes-19	254.88	324.5	4.65	8	PVC	0.01	1,521	1	4	5	0.3		
Kirkland_Main-25	Kirkland_Manholes-622	255	Kirkland_Manholes-19	254.88	84.5	0.14	8	PVC	0.01	266	12	60	72	26.9		
Kirkland_Main-26	Kirkland_Manholes-624	257.73	Kirkland_Manholes-623	256.4	95.1	1.4	8	PVC	0.01	834	1	4	5	0.5		
Kirkland_Main-27	Kirkland_Manholes-623	256.4	Kirkland_Manholes-622	255	306.3	0.46	8	PVC	0.01	477	2	8	10	2		
Kirkland_Main-28	Kirkland_Manholes-625	258	Kirkland_Manholes-622	255	179.1	1.67	8	PVC	0.01	912	10	48	57	6.3		
Kirkland_Main-29	Kirkland_Manholes-28	182.96	Kirkland_Manholes-29	182.79	41.4	0.4	8	PVC	0.01	446	4	4	8	1.8		
Kirkland_Main-30	Kirkland_Manholes-29	182.79	Kirkland_Manholes-25	175.02	121.6	6.39	8	PVC	0.01	1,783	16	43	59	3.3		
Kirkland_Main-31	Kirkland_Manholes-36	251.25	Kirkland_Manholes-35	222.04	280.7	10.41	8	PVC	0.01	2,275	2	4	6	0.3		
Kirkland_Main-32	Kirkland_Manholes-35	222.04	Kirkland_Manholes-34	221.71	82.5	0.4	8	PVC	0.01	446	3	9	12	2.6		
Kirkland_Main-33	Kirkland_Manholes-34	221.71	Kirkland_Manholes-32	220.36	300.4	0.45	8	PVC	0.01	473	5	13	18	3.7		
Kirkland_Main-34	Kirkland_Manholes-32	220.36	Kirkland_Manholes-33	219.84	21.3	2.44	8	PVC	0.01	1,102	6	17	23	2.1		
Kirkland_Main-35	Kirkland_Manholes-33	219.84	Kirkland_Manholes-31	218.88	40.1	2.39	8	PVC	0.01	1,091	6	21	28	2.5		
Kirkland_Main-36	Kirkland_Manholes-37	238.46	Kirkland_Manholes-31	218.88	419.9	4.66	8	PVC	0.01	1,523	2	4	6	0.4		
Kirkland_Main-37	Kirkland_Manholes-31	218.88	Kirkland_Manholes-30	193.77	330.5	7.6	8	PVC	0.01	1,943	9	30	39	2		
Kirkland_Main-38	Kirkland_Manholes-30	193.77	Kirkland_Manholes-29	182.79	147.1	7.46	8	PVC	0.01	1,926	12	34	46	2.4		
Kirkland_Main-39	Kirkland_Manholes-40	185.88	Kirkland_Manholes-41	184.86	116.1	0.88	8	PVC	0.01	661	0	9	9	1.3		
Kirkland_Main-40	Kirkland_Manholes-41	184.86	Kirkland_Manholes-38	173.18	108.4	10.78	8	PVC	0.01	2,314	1	13	14	0.6		
Kirkland_Main-41	Kirkland_Manholes-39	193.85	Kirkland_Manholes-40	185.88	407	1.96	8	PVC	0.01	987	0	4	4	0.4		
Kirkland_Main-42	Kirkland_Manholes-54	66.84	Kirkland_Manholes-103	59.75	133.4	5.31	8	PVC	0.01	1,625	35	154	189	11.6	SM14-Ex-EX13	
Kirkland_Main-43	Kirkland_Manholes-47	192.83	Kirkland_Manholes-48	169.78	343.8	6.71	8	PVC	0.01	1,826	1	4	6	0.3	SM14-Ex-EX13	
Kirkland_Main-44	Kirkland_Manholes-48	169.78	Kirkland_Manholes-49	164.6	338.4	1.53	8	PVC	0.01	872	3	9	12	1.3	SM14-Ex-EX13	
Kirkland_Main-45	Kirkland_Manholes-49	164.6	Kirkland_Manholes-50	161.4	179.7	1.78	8	PVC	0.01	941	22	111	133	14.1	SM14-Ex-EX13	
Kirkland_Main-46	Kirkland_Manholes-50	161.4	Kirkland_Manholes-51	157.39	303.6	1.32	8	PVC	0.01	810	23	115	139	17.1	SM14-Ex-EX13	
Kirkland_Main-47	Kirkland_Manholes-51	157.39	Kirkland_Manholes-52	124.84	333.7	9.75	8	PVC	0.01	2,202	25	119	145	6.6	SM14-Ex-EX13	
Kirkland_Main-48	Kirkland_Manholes-59	155.25	Kirkland_Manholes-58	153.05	131	1.68	8	PVC	0.01	914	1	4	5	0.6	SM14-Ex-EX14	
Kirkland_Main-49	Kirkland_Manholes-58	153.05	Kirkland_Manholes-57	140.82	263.2	4.65	8	PVC	0.01	1,520	2	9	10	0.7	SM14-Ex-EX14	
Kirkland_Main-50	Kirkland_Manholes-57	140.82	Kirkland_Manholes-56	112.82	272.1	10.29	8	PVC	0.01	2,262	4	13	17	0.7	SM14-Ex-EX14	
Kirkland_Main-51	Kirkland_Manholes-56	112.82	Kirkland_Manholes-55	79.92	269.4	12.21	8	PVC	0.01	2,464	6	17	23	0.9	SM14-Ex-EX14	
Kirkland_Main-52	Kirkland_Manholes-55	79.92	Kirkland_Manholes-54	66.84	152.2	8.59	8	PVC	0.01	2,067	8	21	29	1.4	SM14-Ex-EX14	
Kirkland_Main-53	Kirkland_Manholes-52	124.84	Kirkland_Manholes-53	83.26	336	12.38	8	PVC	0.01	2,480	27	124	151	6.1	SM14-Ex-EX13	
Kirkland_Main-54	Kirkland_Manholes-53	83.26	Kirkland_Manholes-54	66.84	148.1	11.08	8	PVC	0.01	2,347	27	128	155	6.6	SM14-Ex-EX13	
Kirkland_Main-55	Kirkland_Manholes-62	222.28	Kirkland_Manholes-63	216.98	205.6	2.58	8	PVC	0.01	1,132	2	4	6	0.5		
Kirkland_Main-56	Kirkland_Manholes-63	216.98	Kirkland_Manholes-60	215.88	80.7	1.36	8	PVC	0.01	823	2	9	10	1.3		
Kirkland_Main-57	Kirkland_Manholes-60	215.88	Kirkland_Manholes-61	215.72	40.6	0.4	8	PVC	0.01	446	3	13	16	3.5		Drop Connection
Kirkland_Main-58	Kirkland_Manholes-65	199.61	Kirkland_Manholes-66	186.65	326.2	3.97	8	PVC	0.01	1,405	11	38	49	3.5	SM14-Ex-EX6	
Kirkland_Main-59	Kirkland_Manholes-66	186.65	Kirkland_Manholes-67	185.01	47	3.49	8	PVC	0.01	1,317	37	102	140	10.6	SM14-Ex-EX17	
Kirkland_Main-61	Kirkland_Manholes-72	160.29	Kirkland_Manholes-70	152.59	265.8	2.9	8	PVC	0.01	1,200	2	4	6	0.5	SM14-Ex-EX15	
Kirkland_Main-62	Kirkland_Manholes-985	205.92	Kirkland_Manholes-986	204.38	192.7	0.8	8	PVC	0.01	630	29	137	165	26.2	SM14-Ex-EX3	
Kirkland_Main-63	Kirkland_Manholes-242	21.02	Kirkland_Manholes-2761	12.79	68	12.1	8	PVC	0.01	2,453	60	265	325	13.2		
Kirkland_Main-64	Kirkland_Manholes-1033	173.21	Kirkland_Manholes-450	130.07	239	18.05	8	PVC	0.01	2,996	4	13	16	0.5		
Kirkland_Main-65	Kirkland_Manholes-71	153	Kirkland_Manholes-70	152.59	153.6	0.27	8	PVC	0.01	364	1	4	5	1.4	SM14-Ex-EX16	
Kirkland_Main-66	Kirkland_Manholes-69	159.19	Kirkland_Manholes-70	152.59	340.9	1.94	8	PVC	0.01	981	4	9	12	1.3	SM14-Ex-EX16	
Kirkland_Main-67	Kirkland_Manholes-68	178.61	Kirkland_Manholes-69	159.19	346.1	5.61	8	PVC	0.01	1,670	2	4	6	0.4	SM14-Ex-EX16	
Kirkland_Main-68	Kirkland_Manholes-73	249.05	Kirkland_Manholes-74	244.74	143	3.01	8	PVC	0.01	1,224	0	4	4	0.4		

Existing with Proposed Improvements - Peak Hour Flow - Pipe Capacity Table

Label	Upstream Node	Upstream Invert Elevation (ft)	Downstream Node	Downstream Invert Elevation (ft)	Length (ft)	Slope (%)	Diameter (in)	Material	Manning's n	Design Capacity (gpm)	Domestic Flow (gpm)	I/I Flow (gpm)	Total Flow (gpm)	Percent Full (%)	CIP No.	Notes
Kirkland_Main-69	Kirkland_Manholes-77	217.04	Kirkland_Manholes-78	207.46	342.9	2.79	8	PVC	0.01	1,178	9	21	30	2.5	SM14-Ex-EX7	
Kirkland_Main-70	Kirkland_Manholes-76	225.56	Kirkland_Manholes-77	217.04	294.1	2.9	8	PVC	0.01	1,200	5	17	22	1.8	SM14-Ex-EX7	
Kirkland_Main-71	Kirkland_Manholes-75	235.08	Kirkland_Manholes-76	225.56	281.9	3.38	8	PVC	0.01	1,296	3	13	16	1.2	SM14-Ex-EX7	
Kirkland_Main-72	Kirkland_Manholes-74	244.74	Kirkland_Manholes-75	235.08	281.2	3.44	8	PVC	0.01	1,307	2	9	10	0.8	SM14-Ex-EX7	
Kirkland_Main-75	Kirkland_Manholes-79	197.48	Kirkland_Manholes-66	186.65	235.2	4.6	8	PVC	0.01	1,513	24	60	84	5.5	SM14-Ex-EX17	
Kirkland_Main-76	Kirkland_Manholes-78	207.46	Kirkland_Manholes-79	197.48	229.3	4.35	8	PVC	0.01	1,471	23	55	78	5.3	SM14-Ex-EX17	
Kirkland_Main-78	Kirkland_Manholes-46	167.44	Kirkland_Manholes-43	166.66	144	0.54	8	PVC	0.01	519	0	9	9	1.6	SM14-Ex-EX5	
Kirkland_Main-79	Kirkland_Manholes-43	166.66	Kirkland_Manholes-44	166.02	96.1	0.67	8	PVC	0.01	575	18	90	108	18.7	SM14-Ex-EX5	
Kirkland_Main-80	Kirkland_Manholes-45	166.8	Kirkland_Manholes-44	166.02	115.5	0.68	8	PVC	0.01	579	0	4	4	0.7	SM14-Ex-EX5	
Kirkland_Main-81	Kirkland_Manholes-27	172.24	Kirkland_Manholes-26	167.35	165.4	2.96	8	PVC	0.01	1,212	2	21	23	1.9	SM14-Ex-EX5	
Kirkland_Main-82	Kirkland_Manholes-26	167.35	Kirkland_Manholes-43	166.66	133.3	0.52	8	PVC	0.01	507	18	77	95	18.7	SM14-Ex-EX5	
Kirkland_Main-84	Kirkland_Manholes-38	173.18	Kirkland_Manholes-27	172.24	235.8	0.4	8	PVC	0.01	446	2	17	19	4.2	SM14-Ex-EX5	
Kirkland_Main-85	Kirkland_Manholes-24	172.7	Kirkland_Manholes-26	167.35	274.1	1.95	8	PVC	0.01	985	16	51	67	6.8	SM14-Ex-EX5	
Kirkland_Main-86	Kirkland_Manholes-42	173.4	Kirkland_Manholes-46	167.44	195.7	3.04	8	PVC	0.01	1,230	0	4	4	0.3	SM14-Ex-EX5	
Kirkland_Main-87	Kirkland_Manholes-25	175.02	Kirkland_Manholes-24	172.7	94.4	2.46	8	PVC	0.01	1,105	16	47	63	5.7	SM14-Ex-EX5	
Kirkland_Main-88	Kirkland_Manholes-44	166.02	Kirkland_Manholes-49	164.6	321.6	0.44	8	PVC	0.01	469	18	98	116	24.8	SM14-Ex-EX5	
Kirkland_Main-90	Kirkland_Manholes-81	88.9	Kirkland_Manholes-143	71.16	340.9	5.2	8	PVC	0.01	1,608	2	4	6	0.4		
Kirkland_Main-91	Kirkland_Manholes-70	152.59	Kirkland_Manholes-82	150.35	263.6	0.85	8	PVC	0.01	650	7	21	29	4.4	SM14-Ex-EX15	
Kirkland_Main-92	Kirkland_Manholes-85	147.38	Kirkland_Manholes-84	141.87	73.4	7.51	8	PVC	0.01	1,932	3	9	12	0.6	SM14-Ex-EX24	
Kirkland_Main-93	Kirkland_Manholes-83	157.35	Kirkland_Manholes-85	147.38	229.6	4.34	8	PVC	0.01	1,469	1	4	6	0.4	SM14-Ex-EX24	
Kirkland_Main-95	Kirkland_Manholes-82	150.35	Kirkland_Manholes-86	148.26	180.8	1.16	8	PVC	0.01	758	8	26	34	4.5	SM14-Ex-EX15	
Kirkland_Main-96	Kirkland_Manholes-87	163.95	Kirkland_Manholes-147	139.14	319.7	7.76	8	PVC	0.01	1,964	40	111	151	7.7	SM14-Ex-EX25	
Kirkland_Main-97	Kirkland_Manholes-67	185.01	Kirkland_Manholes-87	163.95	332	6.34	8	PVC	0.01	1,776	38	107	144	8.1	SM14-Ex-EX25	
Kirkland_Main-98	Kirkland_Manholes-88	192.85	Kirkland_Manholes-89	177.59	273.6	5.58	8	PVC	0.01	1,665	2	4	6	0.4	SM14-Ex-EX26	
Kirkland_Main-99	Kirkland_Manholes-90	174.66	Kirkland_Manholes-91	170.09	87.7	5.21	8	PVC	0.01	1,609	1	4	5	0.3	SM14-Ex-EX27	
Kirkland_Main-100	Kirkland_Manholes-92	172.99	Kirkland_Manholes-91	170.09	82	3.53	8	PVC	0.01	1,325	1	4	5	0.4	SM14-Ex-EX27	
Kirkland_Main-101	Kirkland_Manholes-91	170.09	Kirkland_Manholes-152	157.79	45.8	26.87	8	PVC	0.01	3,654	3	13	15	0.4	SM14-Ex-EX27	Slope verified in as-builts
Kirkland_Main-103	Kirkland_Manholes-98	253.76	Kirkland_Manholes-97	241.6	353.8	3.44	8	PVC	0.01	1,307	3	4	7	0.5	SM14-Ex-EX8	
Kirkland_Main-104	Kirkland_Manholes-2944	250.07	Kirkland_Manholes-2943	249.65	93.4	0.45	8	PVC	0.01	473	0	4	4	0.8		
Kirkland_Main-105	Kirkland_Manholes-97	241.6	Kirkland_Manholes-95	228.66	356.1	3.63	8	PVC	0.01	1,344	5	9	14	1	SM14-Ex-EX8	
Kirkland_Main-106	Kirkland_Manholes-95	228.66	Kirkland_Manholes-96	228	106.1	0.62	8	PVC	0.01	556	7	13	20	3.6	SM14-Ex-EX8	
Kirkland_Main-107	Kirkland_Manholes-96	228	Kirkland_Manholes-93	223.12	245.5	1.99	8	PVC	0.01	994	8	17	25	2.5	SM14-Ex-EX8	
Kirkland_Main-108	Kirkland_Manholes-93	223.12	Kirkland_Manholes-94	210.17	176.3	7.35	8	PVC	0.01	1,911	9	21	30	1.6	SM14-Ex-EX8	
Kirkland_Main-109	Kirkland_Manholes-94	210.17	Kirkland_Manholes-78	207.46	295.3	0.92	8	PVC	0.01	675	12	30	42	6.2	SM14-Ex-EX17	
Kirkland_Main-110	Kirkland_Manholes-1024	212.11	Kirkland_Manholes-94	210.17	143.5	1.35	8	PVC	0.01	820	1	4	6	0.7	SM14-Ex-EX17	
Kirkland_Main-111	Kirkland_Manholes-106	44.49	Kirkland_Manholes-242	21.02	301.2	7.79	8	PVC	0.01	1,968	46	209	255	12.9	SM14-Ex-EX12	
Kirkland_Main-112	Kirkland_Manholes-105	48.51	Kirkland_Manholes-106	44.49	358.2	1.12	8	PVC	0.01	747	44	205	249	33.3	SM14-Ex-EX12	
Kirkland_Main-113	Kirkland_Manholes-103	59.75	Kirkland_Manholes-105	48.51	350.5	3.21	8	PVC	0.01	1,263	43	201	244	19.3	SM14-Ex-EX12	
Kirkland_Main-114	Kirkland_Manholes-104	60.14	Kirkland_Manholes-103	59.75	61	0.64	8	PVC	0.01	564	8	43	51	9		
Kirkland_Main-115	Kirkland_Manholes-102	61.04	Kirkland_Manholes-104	60.14	158.9	0.57	8	PVC	0.01	531	7	38	46	8.6		
Kirkland_Main-116	Kirkland_Manholes-101	61.95	Kirkland_Manholes-102	61.04	98.7	0.92	8	PVC	0.01	676	7	34	41	6.1		
Kirkland_Main-117	Kirkland_Manholes-99	74.09	O-41	72.48	38.5	4.19	8	PVC	0.01	1,443	65	15	80	5.5		
Kirkland_Main-119	Kirkland_Manholes-107	262.65	Kirkland_Manholes-2737	259.86	239.4	1.17	8	PVC	0.01	761	2	4	6	0.8		
Kirkland_Main-120	Kirkland_Manholes-109	325.4	Kirkland_Manholes-110	324.77	37.7	1.67	8	PVC	0.01	912	11	53	64	7.1		
Kirkland_Main-121	Kirkland_Manholes-110	324.77	Kirkland_Manholes-111	324	11.2	6.85	8	PVC	0.01	1,846	18	76	93	5.1		
Kirkland_Main-122	Kirkland_Manholes-108	326.5	Kirkland_Manholes-109	325.4	336.7	0.33	8	PVC	0.01	403	9	30	40	9.8		
Kirkland_Main-123	Kirkland_Manholes-112	326.56	Kirkland_Manholes-110	324.77	134.2	1.33	8	PVC	0.01	814	6	15	21	2.6		
Kirkland_Main-124	Kirkland_Manholes-113	357.54	Kirkland_Manholes-112	326.56	558	5.55	8	PVC	0.01	1,661	4	8	12	0.7		
Kirkland_Main-125	Kirkland_Manholes-134	351.46	Kirkland_Manholes-835	347	314.9	1.42	8	PVC	0.01	839	2	4	6	0.7		Drop Connection
Kirkland_Main-126	Kirkland_Manholes-128	355.4	Kirkland_Manholes-127	354	128.2	1.09	8	PVC	0.01	737	2	4	6	0.8		
Kirkland_Main-127	Kirkland_Manholes-127	354	Kirkland_Manholes-126	343.91	279.9	3.6	8	PVC	0.01	1,339	3	8	11	0.8		
Kirkland_Main-128	Kirkland_Manholes-126	343.91	Kirkland_Manholes-125	337.71	240.8	2.58	8	PVC	0.01	1,131	5	12	17	1.5		
Kirkland_Main-129	Kirkland_Manholes-125	337.71	Kirkland_Manholes-838	337.31	98.6	0.41	8	PVC	0.01	449	6	16	22	4.9		
Kirkland_Main-130	Kirkland_Manholes-129	356.73	Kirkland_Manholes-130	350.77	205.5	2.9	8	PVC	0.01	1,201	3	4	7	0.6	SM14-Ex-EX32	
Kirkland_Main-131	Kirkland_Manholes-130	350.77	Kirkland_Manholes-131	322.01	184.9	15.56	8	PVC	0.01	2,781	4	8	12	0.4		
Kirkland_Main-132	Kirkland_Manholes-133	323.35	Kirkland_Manholes-131	322.01	242.6	0.55	8	PVC	0.01	524	25	72	97	18.4		
Kirkland_Main-133	Kirkland_Manholes-842	324.88	Kirkland_Manholes-133	323.35	209.8	0.73	8	PVC	0.01	602	24	68	91	15.1		
Kirkland_Main-134	Kirkland_Manholes-131	322.01	Kirkland_Manholes-132	319.83	182.3	1.2	8	PVC	0.01	771	30	83	113	14.7		
Kirkland_Main-135	Kirkland_Manholes-132	319.83	Kirkland_Manholes-116	315.23	159	2.89	8	PVC	0.01	1,199	31	87	119	9.9		
Kirkland_Main-136	Kirkland_Manholes-115	335.3	Kirkland_Manholes-116	315.23	256.3	7.83	8	PVC	0.01	1,973	3	8	187	9.5		
Kirkland_Main-137	Kirkland_Manholes-114	360.4	Kirkland_Manholes-115	335.3	252.2	9.95	8	PVC	0.01	2,224	1	4	5	0.2		
Kirkland_Main-138	Kirkland_Manholes-1806	38.89	Kirkland_Manholes-2926	31.46	54.5	13.64	8	PVC	0.01	2,604	87	311	398	15.3	SM4	

Existing with Proposed Improvements - Peak Hour Flow - Pipe Capacity Table

Label	Upstream Node	Upstream Invert Elevation (ft)	Downstream Node	Downstream Invert Elevation (ft)	Length (ft)	Slope (%)	Diameter (in)	Material	Manning's n	Design Capacity (gpm)	Domestic Flow (gpm)	I/I Flow (gpm)	Total Flow (gpm)	Percent Full (%)	CIP No.	Notes
Kirkland_Main-139	Kirkland_Manholes-2926	31.46	Kirkland_Manholes-1396	27.46	24.1	16.61	8	PVC	0.01	2,873	87	319	406	14.1	SM4	
Kirkland_Main-140	Kirkland_Manholes-123	328.2	Kirkland_Manholes-124	326.1	151.9	1.38	8	PVC	0.01	829	2	8	10	1.2		
Kirkland_Main-141	Kirkland_Manholes-124	326.1	Kirkland_Manholes-109	325.4	313.3	0.22	8	PVC	0.01	333	2	15	17	5.2		
Kirkland_Main-142	Kirkland_Manholes-122	345.33	Kirkland_Manholes-108	326.5	238.6	7.89	8	PVC	0.01	1,981	9	23	32	1.6		
Kirkland_Main-143	Kirkland_Manholes-120	360.7	Kirkland_Manholes-121	358.16	294.2	0.86	8	PVC	0.01	655	3	8	11	1.7		
Kirkland_Main-144	Kirkland_Manholes-121	358.16	Kirkland_Manholes-122	345.33	387.6	3.31	8	PVC	0.01	1,283	6	15	21	1.6		
Kirkland_Main-145	Kirkland_Manholes-119	359.58	Kirkland_Manholes-118	354.26	105.6	5.04	8	PVC	0.01	1,583	1	4	5	0.3		
Kirkland_Main-146	Kirkland_Manholes-118	354.26	Kirkland_Manholes-117	315.69	251.8	15.32	8	PVC	0.01	2,760	2	8	10	0.4		
Kirkland_Main-147	Kirkland_Manholes-117	315.69	Kirkland_Manholes-116	315.23	331.8	0.14	8	PVC	0.01	263	3	12	15	5.6		
Kirkland_Main-148	Kirkland_Manholes-116	315.23	Kirkland_Manholes-137	298.8	246.4	6.67	8	PVC	0.01	1,821	38	111	325	17.8		
Kirkland_Main-149	Kirkland_Manholes-137	298.8	Kirkland_Manholes-1076	298.68	103.3	0.12	12	PVC	0.01	709	40	119	336	47.4	SM14-Ex-EX23	
Kirkland_Main-150	Kirkland_Manholes-138	300.28	Kirkland_Manholes-137	298.8	187.2	0.79	8	PVC	0.01	627	2	4	6	0.9		
Kirkland_Main-151	Kirkland_Manholes-135	297.13	Kirkland_Manholes-136	295.76	244.5	0.56	8	PVC	0.01	528	2	4	6	1.1		
Kirkland_Main-152	Kirkland_Manholes-136	295.76	Kirkland_Manholes-1064	278.57	324.4	5.3	8	PVC	0.01	1,623	3	8	11	0.7		
Kirkland_Main-154	Kirkland_Manholes-139	305.82	Kirkland_Manholes-1078	305.14	98	0.69	8	PVC	0.01	587	1	4	5	0.9		
Kirkland_Main-156	Kirkland_Manholes-140	281.69	Kirkland_Manholes-141	277.32	84.7	5.16	8	PVC	0.01	1,601	1	4	5	0.3		
Kirkland_Main-157	Kirkland_Manholes-141	277.32	Kirkland_Manholes-142	276.94	95.7	0.4	8	PVC	0.01	446	1	8	9	2		Drop Connection
Kirkland_Main-158	Kirkland_Manholes-142	255.54	Kirkland_Manholes-1090	254.86	50.7	1.34	8	PVC	0.01	817	1	12	13	1.6		
Kirkland_Main-160	Kirkland_Manholes-111	324	TREND_WETWELL	317.75	16.6	37.69	8	PVC	0.01	4,328	18	83	102	2.3		
Kirkland_Main-161	Kirkland_Manholes-144	88.96	Kirkland_Manholes-146	84.42	39.5	11.5	8	PVC	0.01	2,391	6	17	23	1		
Kirkland_Main-162	Kirkland_Manholes-86	148.26	Kirkland_Manholes-157	123.36	221.1	11.26	8	PVC	0.01	2,366	9	30	39	1.7	SM14-Ex-EX15	
Kirkland_Main-163	Kirkland_Manholes-84	141.87	Kirkland_Manholes-155	126.86	190.9	7.86	8	PVC	0.01	1,977	4	13	17	0.9	SM14-Ex-EX24	
Kirkland_Main-164	Kirkland_Manholes-156	125.08	Kirkland_Manholes-157	123.36	264.1	0.65	8	PVC	0.01	569	6	21	28	4.9	SM14-Ex-EX24	
Kirkland_Main-165	Kirkland_Manholes-157	123.36	Kirkland_Manholes-158	121.97	144.6	0.96	8	PVC	0.01	691	17	55	72	10.4	SM14-Ex-EX15	
Kirkland_Main-166	Kirkland_Manholes-147	139.14	Kirkland_Manholes-148	138.62	289.8	0.18	8	PVC	0.01	299	42	115	157	52.6	SM14-Ex-EX25	
Kirkland_Main-167	Kirkland_Manholes-148	138.62	Kirkland_Manholes-149	122.95	57.1	27.47	8	PVC	0.01	3,695	42	119	162	4.4	SM14-Ex-EX25	
Kirkland_Main-168	Kirkland_Manholes-149	122.95	Kirkland_Manholes-150	116.05	168.5	4.1	8	PVC	0.01	1,427	42	124	166	11.6	SM14-Ex-EX25	
Kirkland_Main-169	Kirkland_Manholes-153	130.01	Kirkland_Manholes-150	116.05	56.4	24.77	8	PVC	0.01	3,509	5	17	22	0.6	SM14-Ex-EX26	
Kirkland_Main-170	Kirkland_Manholes-150	116.05	Kirkland_Manholes-159	80.68	226.3	15.63	8	PVC	0.01	2,788	52	166	218	7.8	SM14-Ex-EX28	
Kirkland_Main-171	Kirkland_Manholes-151	132.11	Kirkland_Manholes-150	116.05	132.2	12.15	8	PVC	0.01	2,458	3	21	25	1	SM14-Ex-EX27	
Kirkland_Main-172	Kirkland_Manholes-152	157.79	Kirkland_Manholes-151	132.11	148.9	17.25	8	PVC	0.01	2,928	3	17	20	0.7	SM14-Ex-EX27	
Kirkland_Main-173	Kirkland_Manholes-174	143.33	Kirkland_Manholes-153	130.01	57.7	23.09	8	PVC	0.01	3,388	4	13	17	0.5	SM14-Ex-EX26	
Kirkland_Main-174	Kirkland_Manholes-89	177.59	Kirkland_Manholes-174	143.33	179.4	19.1	8	PVC	0.01	3,081	3	9	12	0.4	SM14-Ex-EX26	
Kirkland_Main-175	Kirkland_Manholes-155	126.86	Kirkland_Manholes-156	125.08	248.1	0.72	8	PVC	0.01	597	5	17	22	3.6	SM14-Ex-EX24	
Kirkland_Main-176	Kirkland_Manholes-158	121.97	Kirkland_Manholes-160	41.73	324.9	24.69	8	PVC	0.01	3,504	18	60	78	2.2	SM14-Ex-EX15	
Kirkland_Main-177	Kirkland_Manholes-160	41.73	Kirkland_Manholes-175	34.4	159.3	4.6	8	PVC	0.01	1,512	19	64	83	5.5	SM14-Ex-EX15	
Kirkland_Main-178	Kirkland_Manholes-168	22.33	Kirkland_Manholes-166	21.44	221.6	0.4	8	PVC	0.01	446	1	4	5	1.2		
Kirkland_Main-179	Kirkland_Manholes-165	60.59	Kirkland_Manholes-166	21.44	398.8	9.82	8	PVC	0.01	2,209	1	4	5	0.2		
Kirkland_Main-180	Kirkland_Manholes-166	21.44	Kirkland_Manholes-167	21.4	9.5	0.4	8	PVC	0.01	445	2	13	15	3.4		Drop Connection
Kirkland_Main-181	Kirkland_Manholes-143	71.16	Kirkland_Manholes-164	59.16	83.9	14.3	8	PVC	0.01	2,666	13	47	60	2.2		
Kirkland_Main-182	Kirkland_Manholes-146	84.42	Kirkland_Manholes-143	71.16	154.2	8.6	8	PVC	0.01	2,067	10	38	49	2.4		
Kirkland_Main-183	Kirkland_Manholes-163	106.36	Kirkland_Manholes-146	84.42	161.9	13.55	8	PVC	0.01	2,596	4	17	21	0.8		
Kirkland_Main-184	Kirkland_Manholes-161	132.09	Kirkland_Manholes-162	124.37	152	5.08	8	PVC	0.01	1,589	3	9	11	0.7		
Kirkland_Main-185	Kirkland_Manholes-162	124.37	Kirkland_Manholes-163	106.36	185.8	9.69	8	PVC	0.01	2,195	4	13	16	0.7		
Kirkland_Main-186	Kirkland_Manholes-169	21.92	Kirkland_Manholes-167	19.46	234.8	1.05	18	PVC	0.01	6,274	303	1,101	1,404	22.4	SM3	
Kirkland_Main-187	Kirkland_Manholes-170	23.23	Kirkland_Manholes-169	21.92	100.1	1.31	18	PVC	0.01	7,012	300	1,084	1,384	19.7	SM3	
Kirkland_Main-188	Kirkland_Manholes-2762	13.1	Kirkland_Manholes-2761	12.79	196.5	0.16	36	PVC	0.01	15,458	446	1,555	2,302	14.9	SM14-Ex-EX10	
Kirkland_Main-189	Kirkland_Manholes-173	34.1	Kirkland_Manholes-172	31.43	44.6	5.99	8	PVC	0.01	1,725	3	13	15	0.9		
Kirkland_Main-190	Kirkland_Manholes-178	67.04	Kirkland_Manholes-179	37.91	174.4	16.71	8	PVC	0.01	2,882	4	9	13	0.4		
Kirkland_Main-191	Kirkland_Manholes-154	101.95	Kirkland_Manholes-178	67.04	253.3	13.78	8	PVC	0.01	2,617	2	4	7	0.3		
Kirkland_Main-192	Kirkland_Manholes-188	58.06	Kirkland_Manholes-187	54.23	46.2	8.28	15	PVC	0.01	10,848	202	661	864	8	SM14-Ex-EX30	
Kirkland_Main-193	Kirkland_Manholes-187	54.23	Kirkland_Manholes-185	53.13	306	0.36	36	PVC	0.01	23,331	203	666	869	3.7	SM14-Ex-EX30	
Kirkland_Main-194	Kirkland_Manholes-159	80.68	Kirkland_Manholes-186	56.15	205.5	11.94	8	PVC	0.01	2,436	52	171	223	9.2	SM14-Ex-EX28	
Kirkland_Main-195	Kirkland_Manholes-189	57.91	Kirkland_Manholes-186	56.15	258.6	0.68	8	PVC	0.01	582	2	4	6	1	SM14-Ex-EX29	
Kirkland_Main-196	Kirkland_Manholes-186	56.15	Kirkland_Manholes-185	53.13	48.4	6.24	12	PVC	0.01	5,193	55	179	234	4.5	SM14-Ex-EX28	
Kirkland_Main-197	Kirkland_Manholes-185	53.13	Kirkland_Manholes-183	41.05	170.7	7.08	15	PVC	0.01	10,026	258	849	1,108	11	SM14-Ex-EX30	
Kirkland_Main-198	Kirkland_Manholes-182	53.5	Kirkland_Manholes-181	38.4	151.6	9.96	8	PVC	0.01	2,225	1	4	6	0.2		
Kirkland_Main-199	Kirkland_Manholes-314	150.22	Kirkland_Manholes-315	148.46	139.8	1.26	8	PVC	0.01	791	0	4	4	0.5		
Kirkland_Main-200	Kirkland_Manholes-315	148.46	Kirkland_Manholes-316	147.8	125.4	0.53	8	PVC	0.01	512	0	9	9	1.7		
Kirkland_Main-201	Kirkland_Manholes-316	147.8	Kirkland_Manholes-317	146.79	246.9	0.41	12	PVC	0.01	1,330	89	316	405	30.5	SM14-Ex-EX30	
Kirkland_Main-202	Kirkland_Manholes-1205	19.63	Kirkland_Manholes-1850	19.39	404.6	0.06	8	PVC	0.01	172	1	6	7	4.1	SM10	
Kirkland_Main-203	Kirkland_Manholes-1187	22.69	Kirkland_Manholes-1188	22.09	184.7	0.32	12	PVC	0.01	1,185	1	9	9	0.8	SM14-Ex-EX37	

Existing with Proposed Improvements - Peak Hour Flow - Pipe Capacity Table

Label	Upstream Node	Upstream Invert Elevation (ft)	Downstream Node	Downstream Invert Elevation (ft)	Length (ft)	Slope (%)	Diameter (in)	Material	Manning's n	Design Capacity (gpm)	Domestic Flow (gpm)	I/I Flow (gpm)	Total Flow (gpm)	Percent Full (%)	CIP No.	Notes
Kirkland_Main-204	Kirkland_Manholes-1188	22.09	Kirkland_Manholes-1189	21.99	127.3	0.08	12	PVC	0.01	583	2	18	19	3.3	SM14-Ex-EX37	
Kirkland_Main-205	Kirkland_Manholes-1189	21.99	Kirkland_Manholes-1202	18.39	139.2	2.59	12	PVC	0.01	3,343	3	27	30	0.9	SM14-Ex-EX37	
Kirkland_Main-206	Kirkland_Manholes-1202	18.39	Kirkland_Manholes-1203	18.22	388.5	0.04	12	PVC	0.01	435	5	35	40	9.3	SM14-Ex-EX37	
Kirkland_Main-207	Kirkland_Manholes-1203	18.22	Kirkland_Manholes-1204	17.89	122.5	0.27	12	PVC	0.01	1,079	6	44	50	4.6	SM14-Ex-EX37	
Kirkland_Main-208	Kirkland_Manholes-1204	17.89	Kirkland_Manholes-516	17.69	304.6	0.07	12	PVC	0.01	533	7	53	60	11.3	SM14-Ex-EX37	
Kirkland_Main-209	Kirkland_Manholes-1197	181.82	Kirkland_Manholes-1196	172.3	310.3	3.07	8		0.012	1,029	1	41	42	4.1		
Kirkland_Main-210	Kirkland_Manholes-1196	172.3	Kirkland_Manholes-1195	162.64	327.7	2.95	8		0.012	1,009	2	49	51	5.1		
Kirkland_Main-211	Kirkland_Manholes-1195	162.64	Kirkland_Manholes-1190	151.12	307.8	3.74	8		0.012	1,137	2	58	60	5.3		
Kirkland_Main-212	Kirkland_Manholes-1190	151.12	Kirkland_Manholes-1405	132.7	345	5.34	8		0.012	1,358	4	74	78	5.7		
Kirkland_Main-213	Kirkland_Manholes-1191	345.24	Kirkland_Manholes-1192	340.89	127.3	3.42	6	Vitrified Clay	0.013	465	14	4	18	3.8		
Kirkland_Main-214	Kirkland_Manholes-1192	340.89	Kirkland_Manholes-1193	318.62	250.8	8.88	6	Vitrified Clay	0.013	750	60	8	67	9		
Kirkland_Main-215	Kirkland_Manholes-1193	318.62	Kirkland_Manholes-1194	312.16	165.2	3.91	6	Vitrified Clay	0.013	498	60	12	71	14.3		
Kirkland_Main-216	Kirkland_Manholes-1194	312.16	Kirkland_Manholes-1212	307.51	140.5	3.31	6	Concrete	0.013	458	60	16	75	16.5		
Kirkland_Main-217	Kirkland_Manholes-1146	215.3	Kirkland_Manholes-500	209.24	317	1.91	8	PVC	0.01	975	13	49	62	6.4	SM4	
Kirkland_Main-218	Kirkland_Manholes-1225	212.63	Kirkland_Manholes-1147	194.47	343.1	5.29	8	PVC	0.01	1,622	2	8	10	0.6	SM14-Ex-EX88	
Kirkland_Main-219	Kirkland_Manholes-500	209.24	Kirkland_Manholes-1147	194.47	315.3	4.68	8	PVC	0.01	1,526	18	66	84	5.5	SM4	
Kirkland_Main-220	Kirkland_Manholes-1149	192.13	Kirkland_Manholes-1148	179.25	269.3	4.78	8	PVC	0.01	1,542	17	64	81	5.3	SM14-Ex-EX89	
Kirkland_Main-221	Kirkland_Manholes-1147	194.47	Kirkland_Manholes-1148	179.25	319	4.77	8	PVC	0.01	1,540	22	82	104	6.8	SM4	
Kirkland_Main-222	Kirkland_Manholes-1148	179.25	Kirkland_Manholes-1796	160.8	313.7	5.88	8	PVC	0.01	1,710	41	154	196	11.4	SM4	
Kirkland_Main-223	Kirkland_Manholes-1171	160.49	Kirkland_Manholes-1150	151.79	210.3	4.14	8	PVC	0.01	1,434	7	41	48	3.4	SM10	
Kirkland_Main-224	Kirkland_Manholes-1129	164.28	Kirkland_Manholes-1128	162.57	73.5	2.33	8	PVC	0.01	1,075	0	4	4	0.4	SM14-Ex-EX4	
Kirkland_Main-225	Kirkland_Manholes-1111	165.6	O-8	165.51	22.8	0.4	8	PVC	0.01	446	1	8	9	2		
Kirkland_Main-227	Kirkland_Manholes-197	50.1	Kirkland_Manholes-196	49.03	107.3	1	8	PVC	0.01	704	7	34	41	5.9	SM14-Ex-EX43	
Kirkland_Main-228	Kirkland_Manholes-196	49.03	Kirkland_Manholes-195	48.03	74.6	1.34	8	PVC	0.01	816	8	38	46	5.7	SM14-Ex-EX43	
Kirkland_Main-229	Kirkland_Manholes-740	221.28	Kirkland_Manholes-711	219.85	98.7	1.45	8	PVC	0.01	849	9	4	13	1.5		
Kirkland_Main-230	Kirkland_Manholes-1107	164.79	O-9	160.2	26.3	17.47	8	PVC	0.01	2,947	0	8	8	0.3	SM14-Ex-EX21	
Kirkland_Main-231	Kirkland_Manholes-1106	168.9	O-10	168.5	24.6	1.64	18	PVC	0.01	7,851	580	2,122	2,702	34.4		Drop Connection
Kirkland_Main-232	Kirkland_Manholes-1118	200.71	Kirkland_Manholes-1117	196.58	128.3	3.22	8	PVC	0.01	1,265	2	4	6	0.5		
Kirkland_Main-233	Kirkland_Manholes-1115	186.39	Kirkland_Manholes-1114	181.51	185.2	2.63	15	PVC	0.01	6,118	18	16	34	0.6		
Kirkland_Main-234	Kirkland_Manholes-1114	181.51	Kirkland_Manholes-1113	180.6	148.4	0.61	15	PVC	0.01	2,952	34	20	54	1.8		
Kirkland_Main-235	Kirkland_Manholes-1143	203.09	Kirkland_Manholes-1144	194	101.9	8.92	8	PVC	0.01	2,105	1	8	9	0.4	SM14-Ex-EX82	
Kirkland_Main-236	Kirkland_Manholes-1144	194	Kirkland_Manholes-1145	190.6	30.2	11.26	8	PVC	0.01	2,366	1	16	18	0.7		
Kirkland_Main-237	Kirkland_Manholes-1145	190.6	Kirkland_Manholes-1211	186.99	174.5	2.07	8	PVC	0.01	1,014	1	25	26	2.6		
Kirkland_Main-238	Kirkland_Manholes-1184	19.39	Kirkland_Manholes-1185	19.29	139.1	0.07	12	PVC	0.01	557	28	177	205	36.8	SM14-Ex-EX37	
Kirkland_Main-239	Kirkland_Manholes-1183	19.89	Kirkland_Manholes-1184	19.39	178.8	0.28	12	PVC	0.01	1,099	27	168	195	17.7	SM14-Ex-EX37	
Kirkland_Main-242	Kirkland_Manholes-1131	191.56	Kirkland_Manholes-1200	169.25	277.8	8.03	8	PVC	0.01	1,998	16	40	56	2.8	SM14-Ex-EX63	
Kirkland_Main-243	Kirkland_Manholes-1200	169.25	Kirkland_Manholes-1201	159.96	155.1	5.99	8	PVC	0.01	1,726	19	45	63	3.7	SM14-Ex-EX62	
Kirkland_Main-244	Kirkland_Manholes-1201	159.96	Kirkland_Manholes-1182	159	65	1.48	8	PVC	0.01	857	20	49	69	8	SM14-Ex-EX62	
Kirkland_Main-245	Kirkland_Manholes-1182	159	Kirkland_Manholes-529	155.16	83.2	4.62	8	PVC	0.01	1,515	20	53	73	4.8	SM14-Ex-EX62	If flow exceeds capacity, overflow MH will be activated; model appropriately.
Kirkland_Main-246	Kirkland_Manholes-529	155.16	Kirkland_Manholes-527	146.55	210.2	4.1	8	PVC	0.01	1,427	21	57	78	5.5	SM10	
Kirkland_Main-247	Kirkland_Manholes-516	17.69	Kirkland_Manholes-2958	17.19	310.2	0.16	12	PVC	0.01	835	8	62	70	8.4	SM14-Ex-EX37	
Kirkland_Main-248	Kirkland_Manholes-318	146.51	Kirkland_Manholes-2957	145.86	162.1	0.4	12	PVC	0.01	1,315	89	324	414	31.5	SM14-Ex-EX30	
Kirkland_Main-249	Kirkland_Manholes-2957	145.86	Kirkland_Manholes-426	144.6	315.5	0.4	12	PVC	0.01	1,315	93	329	422	32.1	SM14-Ex-EX30	
Kirkland_Main-251	Kirkland_Manholes-524	157.52	Kirkland_Manholes-525	156.27	278.3	0.45	8	PVC	0.01	473	2	16	18	3.8	SM10	
Kirkland_Main-253	Kirkland_Manholes-2932	327.56	Kirkland_Manholes-2931	326.77	30	2.63	8	PVC	0.01	1,144	2	24	26	2.3		
Kirkland_Main-254	Kirkland_Manholes-2931	326.77	Kirkland_Manholes-2930	326.38	131.8	0.3	8	PVC	0.01	384	3	28	31	8.1		
Kirkland_Main-255	Kirkland_Manholes-2930	326.38	Kirkland_Manholes-878	325.66	147.9	0.49	8	PVC	0.01	492	3	32	35	7.1		
Kirkland_Main-257	Kirkland_Manholes-2345	343.84	Kirkland_Manholes-2343	315.2	169.5	16.9	8	PVC	0.01	2,898	6	20	26	0.9	SM14-Ex-EX255	
Kirkland_Main-258	Kirkland_Manholes-2344	315.75	Kirkland_Manholes-2343	315.2	137.3	0.4	8	PVC	0.01	446	6	12	18	4	SM14-Ex-EX254	
Kirkland_Main-259	Kirkland_Manholes-2256	329.88	Kirkland_Manholes-2344	315.75	334.7	4.22	8	PVC	0.01	1,449	3	8	11	0.8	SM14-Ex-EX254	
Kirkland_Main-261	Kirkland_Manholes-2346	349.24	Kirkland_Manholes-2345	343.84	323.2	1.67	8	PVC	0.01	911	2	4	6	0.6	SM14-Ex-EX255	
Kirkland_Main-262	Kirkland_Manholes-2347	359.76	Kirkland_Manholes-2345	343.84	158.1	10.07	8	PVC	0.01	2,237	2	12	14	0.6	SM14-Ex-EX255	
Kirkland_Main-263	Kirkland_Manholes-2348	314.6	Kirkland_Manholes-2334	313.34	224.3	0.56	8	PVC	0.01	528	14	40	54	10.2	SM14-Ex-EX254	
Kirkland_Main-264	Kirkland_Manholes-2350	364.04	Kirkland_Manholes-2347	359.76	357	1.2	8	PVC	0.01	772	1	4	5	0.6	SM14-Ex-EX255	
Kirkland_Main-265	Kirkland_Manholes-2351	360.37	Kirkland_Manholes-2347	359.76	181.2	0.34	8	PVC	0.01	409	1	4	5	1.2	SM14-Ex-EX255	
Kirkland_Main-266	Kirkland_Manholes-2352	284.5	Kirkland_Manholes-2259	272.05	240.1	5.18	8	PVC	0.01	1,605	0	4	4	0.3	SM14-Ex-EX250	
Kirkland_Main-267	Kirkland_Manholes-2353	298.2	Kirkland_Manholes-2332	296.43	253	0.7	8	PVC	0.01	590	2	4	6	1	SM14-Ex-EX253	
Kirkland_Main-268	Kirkland_Manholes-2355	240.55	Kirkland_Manholes-2124	217.78	364.4	6.25	12	PVC	0.01	5,196	249	882	1,131	21.8	SM14-Ex-EX248	
Kirkland_Main-269	Kirkland_Manholes-2354	256.04	Kirkland_Manholes-2355	240.55	281.2	5.51	12	PVC	0.01	4,879	246	878	1,124	23	SM14-Ex-EX248	
Kirkland_Main-270	Kirkland_Manholes-2357	271.18	Kirkland_Manholes-2354	256.04	199.4	7.59	8	PVC	0.01	1,943	2	8	10	0.5	SM14-Ex-EX249	
Kirkland_Main-271	Kirkland_Manholes-2258	263.77	Kirkland_Manholes-2354	256.04	150.5	5.14	12	PVC	0.01	4,711	243	866	1,109	23.5	SM14-Ex-EX248	

Existing with Proposed Improvements - Peak Hour Flow - Pipe Capacity Table

Label	Upstream Node	Upstream Invert Elevation (ft)	Downstream Node	Downstream Invert Elevation (ft)	Length (ft)	Slope (%)	Diameter (in)	Material	Manning's n	Design Capacity (gpm)	Domestic Flow (gpm)	I/I Flow (gpm)	Total Flow (gpm)	Percent Full (%)	CIP No.	Notes
Kirkland_Main-272	Kirkland_Manholes-2356	278.21	Kirkland_Manholes-2357	271.18	149.2	4.71	8	PVC	0.01	1,530	1	4	5	0.3		
Kirkland_Main-273	Kirkland_Manholes-2324	245.37	Kirkland_Manholes-2420	230.11	227.1	6.72	8	PVC	0.01	1,828	40	147	187	10.2		
Kirkland_Main-274	Kirkland_Manholes-2358	262.09	Kirkland_Manholes-2412	260.78	357.3	0.37	8	PVC	0.01	427	4	8	12	2.7		
Kirkland_Main-275	Kirkland_Manholes-2359	271.5	Kirkland_Manholes-2358	262.09	128.6	7.32	8	PVC	0.01	1,907	2	4	6	0.3		
Kirkland_Main-276	Kirkland_Manholes-2362	285.37	Kirkland_Manholes-2360	266.1	385.1	5	8	PVC	0.01	1,577	19	60	78	5		
Kirkland_Main-277	Kirkland_Manholes-2360	266.1	Kirkland_Manholes-2411	259.15	259.9	2.67	8	PVC	0.01	1,153	20	64	84	7.3		
Kirkland_Main-278	Kirkland_Manholes-2361	291.01	Kirkland_Manholes-2362	285.37	28	20.16	8	PVC	0.01	3,166	3	8	11	0.3		
Kirkland_Main-279	Kirkland_Manholes-2371	291.2	Kirkland_Manholes-2362	285.37	123.7	4.71	8	PVC	0.01	1,530	15	48	62	4.1		
Kirkland_Main-280	Kirkland_Manholes-2363	291.88	Kirkland_Manholes-2361	291.01	353	0.25	8	PVC	0.01	350	2	4	6	1.6		
Kirkland_Main-281	Kirkland_Manholes-2364	284.3	Kirkland_Manholes-2429	273.52	255	4.23	8	PVC	0.01	1,450	26	91	117	8.1	SM14-Ex-EX260	
Kirkland_Main-282	Kirkland_Manholes-2382	327.1	Kirkland_Manholes-2369	315.99	220.4	5.04	8	PVC	0.01	1,583	3	4	7	0.4		
Kirkland_Main-283	Kirkland_Manholes-2369	315.99	Kirkland_Manholes-2370	312.97	65.7	4.59	8	PVC	0.01	1,511	22	68	90	5.9	SM14-Ex-EX260	
Kirkland_Main-284	Kirkland_Manholes-2383	328.5	Kirkland_Manholes-2369	315.99	277.1	4.51	8	PVC	0.01	1,498	19	60	78	5.2	SM14-Ex-EX260	
Kirkland_Main-285	Kirkland_Manholes-2370	312.97	Kirkland_Manholes-2367	295.27	303.5	5.83	8	PVC	0.01	1,703	23	72	94	5.5	SM14-Ex-EX260	
Kirkland_Main-286	Kirkland_Manholes-2365	289.93	Kirkland_Manholes-2364	284.3	103.6	5.44	8	PVC	0.01	1,644	25	87	113	6.9	SM14-Ex-EX260	
Kirkland_Main-287	Kirkland_Manholes-2367	295.27	Kirkland_Manholes-2366	292.68	34.9	7.43	8	PVC	0.01	1,921	24	75	99	5.2	SM14-Ex-EX260	
Kirkland_Main-288	Kirkland_Manholes-181	38.4	Kirkland_Manholes-180	38.25	24	0.62	8	PVC	0.01	555	2	13	14	2.6		
Kirkland_Main-289	Kirkland_Manholes-184	40.15	Kirkland_Manholes-181	38.4	362.3	0.48	8	PVC	0.01	490	0	4	4	0.9		
Kirkland_Main-290	Kirkland_Manholes-180	38.25	Kirkland_Manholes-179	37.91	155.1	0.22	18	PVC	0.01	2,874	270	947	1,218	42.4	SM3	
Kirkland_Main-291	Kirkland_Manholes-179	37.91	Kirkland_Manholes-177	35.5	248.2	0.97	18	PVC	0.01	6,039	275	960	1,235	20.4	SM3	
Kirkland_Main-292	Kirkland_Manholes-177	35.5	Kirkland_Manholes-176	34.72	401.5	0.19	18	PVC	0.01	2,705	277	986	1,263	46.7	SM3	
Kirkland_Main-293	Kirkland_Manholes-176	34.72	Kirkland_Manholes-175	34.4	144.6	0.22	18	PVC	0.01	2,875	278	990	1,268	44.1	SM3	
Kirkland_Main-294	Kirkland_Manholes-175	34.4	Kirkland_Manholes-171	25.99	328.5	2.56	18	PVC	0.01	9,806	297	1,058	1,355	13.8	SM3	
Kirkland_Main-295	Kirkland_Manholes-171	25.99	Kirkland_Manholes-170	25.29	316.1	0.22	18	PVC	0.01	2,875	299	1,080	1,379	48	SM3	Drop Connection
Kirkland_Main-296	Kirkland_Manholes-172	31.43	Kirkland_Manholes-171	31.34	21.8	0.4	8	PVC	0.01	446	3	17	20	4.4		Drop Connection
Kirkland_Main-297	Kirkland_Manholes-190	38.49	Kirkland_Manholes-180	38.25	107	0.22	15	PVC	0.01	1,763	269	930	1,199	68	SM3	
Kirkland_Main-298	Kirkland_Manholes-183	41.05	Kirkland_Manholes-190	38.49	284.2	0.9	15	PVC	0.01	3,580	268	926	1,194	33.4	SM3	
Kirkland_Main-299	Kirkland_Manholes-167	19.46	Kirkland_Manholes-241	14.7	339.1	1.4	18	PVC	0.01	7,261	305	1,118	1,423	19.6	SM3	
Kirkland_Main-300	Kirkland_Manholes-164	59.16	Kirkland_Manholes-242	58.15	252.4	0.4	8	PVC	0.01	446	14	51	65	14.6		Drop Connection
Kirkland_Main-301	Kirkland_Manholes-203	83.91	Kirkland_Manholes-202	68.28	127.4	12.27	8	PVC	0.01	2,470	1	4	5	0.2		
Kirkland_Main-302	Kirkland_Manholes-202	68.28	Kirkland_Manholes-204	54.86	133.6	10.05	8	PVC	0.01	2,235	1	9	10	0.4		
Kirkland_Main-303	Kirkland_Manholes-204	54.86	Kirkland_Manholes-169	21.92	184.1	17.89	8	PVC	0.01	2,982	3	13	16	0.5		
Kirkland_Main-304	Kirkland_Manholes-209	226.32	Kirkland_Manholes-210	216.33	137.5	7.27	8	PVC	0.01	1,901	2	4	7	0.3	SM14-Ex-EX66	
Kirkland_Main-306	Kirkland_Manholes-214	228.3	Kirkland_Manholes-213	213.69	210.7	6.93	8	PVC	0.01	1,856	2	4	7	0.4		
Kirkland_Main-307	Kirkland_Manholes-213	213.69	Kirkland_Manholes-212	184.62	186.4	15.59	8	PVC	0.01	2,784	6	9	14	0.5		
Kirkland_Main-308	Kirkland_Manholes-212	184.62	Kirkland_Manholes-216	184.01	222.7	0.27	8	PVC	0.01	369	33	98	131	35.6		
Kirkland_Main-309	Kirkland_Manholes-211	186.37	Kirkland_Manholes-212	184.62	362.4	0.48	8	PVC	0.01	490	25	85	111	22.6		
Kirkland_Main-310	Kirkland_Manholes-210	216.33	Kirkland_Manholes-211	186.37	372.2	8.05	8	PVC	0.01	2,000	5	9	14	0.7	SM14-Ex-EX66	
Kirkland_Main-312	Kirkland_Manholes-216	184.01	Kirkland_Manholes-217	183.22	296	0.27	8	PVC	0.01	364	34	102	137	37.6		
Kirkland_Main-313	Kirkland_Manholes-215	220.47	Kirkland_Manholes-217	183.22	347.3	10.73	8	PVC	0.01	2,309	4	4	8	0.3		
Kirkland_Main-314	Kirkland_Manholes-208	241.09	Kirkland_Manholes-207	240.8	258.2	0.11	8	PVC	0.01	236	4	13	16	6.9	SM14-Ex-EX57	
Kirkland_Main-315	Kirkland_Manholes-207	240.8	Kirkland_Manholes-206	239.08	251.3	0.68	8	PVC	0.01	583	6	17	24	4	SM14-Ex-EX57	
Kirkland_Main-316	Kirkland_Manholes-1236	256.67	Kirkland_Manholes-206	239.08	279.5	6.29	8	PVC	0.01	1,769	5	9	13	0.7	SM14-Ex-EX60	
Kirkland_Main-317	Kirkland_Manholes-206	239.08	Kirkland_Manholes-205	228.15	235.6	4.64	8	PVC	0.01	1,519	12	30	42	2.8	SM14-Ex-EX57	
Kirkland_Main-318	Kirkland_Manholes-227	223.31	Kirkland_Manholes-226	219.39	138.6	2.83	8	PVC	0.01	1,186	6	30	36	3		
Kirkland_Main-319	Kirkland_Manholes-229	178.29	Kirkland_Manholes-230	172.81	192.8	2.84	8	PVC	0.01	1,189	1	4	5	0.4		
Kirkland_Main-321	Kirkland_Manholes-2569	300.83	Kirkland_Manholes-2570	299.81	42.2	2.42	8	PVC	0.01	1,096	1	4	5	0.4		
Kirkland_Main-323	Kirkland_Manholes-2570	299.81	Kirkland_Manholes-2573	298.95	117.6	0.73	8	PVC	0.01	603	2	12	14	2.3		
Kirkland_Main-325	Kirkland_Manholes-2574	291.72	Kirkland_Manholes-2578	278.46	194.2	6.83	8	PVC	0.01	1,842	5	32	37	2		
Kirkland_Main-326	Kirkland_Manholes-2575	296.63	Kirkland_Manholes-2574	291.72	277.7	1.77	8	PVC	0.01	938	4	28	32	3.4		
Kirkland_Main-327	Kirkland_Manholes-2572	298.88	Kirkland_Manholes-2575	296.63	102.9	2.19	8	PVC	0.01	1,042	3	24	27	2.6		
Kirkland_Main-330	Kirkland_Manholes-2576	288.87	Kirkland_Manholes-2577	284.91	171.7	2.31	8	PVC	0.01	1,071	1	4	5	0.5		
Kirkland_Main-331	Kirkland_Manholes-2577	284.91	Kirkland_Manholes-2580	279.25	137.4	4.12	8	PVC	0.01	1,431	2	8	10	0.7		
Kirkland_Main-332	Kirkland_Manholes-2580	279.25	Kirkland_Manholes-2579	271.58	247.7	3.1	8	PVC	0.01	1,241	3	12	15	1.2		
Kirkland_Main-333	Kirkland_Manholes-2582	256.45	Kirkland_Manholes-2583	255.68	58.5	1.32	8	PVC	0.01	809	12	75	88	10.9	SM14-Ex-EX313	
Kirkland_Main-334	Kirkland_Manholes-2583	255.68	Kirkland_Manholes-2584	252.35	54.4	6.12	8	PVC	0.01	1,744	13	79	92	5.3	SM14-Ex-EX313	
Kirkland_Main-335	Kirkland_Manholes-2584	252.35	Kirkland_Manholes-2787	252.17	133.2	0.14	8	PVC	0.01	259	13	83	97	37.3	SM14-Ex-EX313	
Kirkland_Main-336	Kirkland_Manholes-2581	260.74	Kirkland_Manholes-2582	256.45	63.8	6.72	8	PVC	0.01	1,828	4	20	24	1.3		
Kirkland_Main-337	Kirkland_Manholes-2786	258.1	Kirkland_Manholes-2582	256.45	266.6	0.62	8	PVC	0.01	555	8	52	60	10.7		
Kirkland_Main-338	Kirkland_Manholes-2579	271.58	Kirkland_Manholes-2581	260.74	232.4	4.66	8	PVC	0.01	1,523	3	16	19	1.3		
Kirkland_Main-339	Kirkland_Manholes-2586	274.45	Kirkland_Manholes-2585	272.57	43.2	4.35	8	PVC	0.01	1,471	1	8	9	0.6		
Kirkland_Main-340	Kirkland_Manholes-2587	285.24	Kirkland_Manholes-2586	274.45	298.8	3.61	8	PVC	0.01	1,340	1	4	5	0.4		

Existing with Proposed Improvements - Peak Hour Flow - Pipe Capacity Table

Label	Upstream Node	Upstream Invert Elevation (ft)	Downstream Node	Downstream Invert Elevation (ft)	Length (ft)	Slope (%)	Diameter (in)	Material	Manning's n	Design Capacity (gpm)	Domestic Flow (gpm)	I/I Flow (gpm)	Total Flow (gpm)	Percent Full (%)	CIP No.	Notes
Kirkland_Main-342	Kirkland_Manholes-2588	292.14	Kirkland_Manholes-2589	286.31	102.9	5.66	8	PVC	0.01	1,678	21	79	101	6	SM14-Ex-EX303	
Kirkland_Main-343	Kirkland_Manholes-2591	288.43	Kirkland_Manholes-2589	286.31	198.2	1.07	8	PVC	0.01	729	1	4	5	0.7	SM14-Ex-EX305	
Kirkland_Main-344	Kirkland_Manholes-2590	303.32	Kirkland_Manholes-2588	292.14	220.1	5.08	8	PVC	0.01	1,589	8	44	51	3.2	SM14-Ex-EX303	
Kirkland_Main-345	Kirkland_Manholes-2592	294.57	Kirkland_Manholes-2588	292.14	159.1	1.53	8	PVC	0.01	871	2	8	10	1.2	SM14-Ex-EX306	
Kirkland_Main-346	Kirkland_Manholes-2589	286.31	Kirkland_Manholes-2593	281.14	131.6	3.93	8	PVC	0.01	1,398	23	87	111	7.9	SM14-Ex-EX303	
Kirkland_Main-347	Kirkland_Manholes-2593	281.14	Kirkland_Manholes-2585	272.57	372.5	2.3	8	PVC	0.01	1,069	24	91	115	10.8	SM14-Ex-EX299	
Kirkland_Main-348	Kirkland_Manholes-2585	272.57	Kirkland_Manholes-2595	270.48	180.9	1.16	8	PVC	0.01	758	25	103	129	17	SM14-Ex-EX299	
Kirkland_Main-349	Kirkland_Manholes-2595	270.48	Kirkland_Manholes-2594	263.61	407.7	1.68	8	PVC	0.01	915	27	107	135	14.7	SM14-Ex-EX299	
Kirkland_Main-350	Kirkland_Manholes-2594	263.61	Kirkland_Manholes-2601	228.74	402.9	8.65	8	PVC	0.01	2,074	30	111	141	6.8	SM14-Ex-EX299	
Kirkland_Main-352	Kirkland_Manholes-2598	252.13	Kirkland_Manholes-2599	217.5	325.5	10.64	8	PVC	0.01	2,300	3	12	15	0.6	SM14-Ex-EX301	
Kirkland_Main-353	Kirkland_Manholes-2597	256.37	Kirkland_Manholes-2598	252.13	172.1	2.46	8	PVC	0.01	1,107	1	8	9	0.8	SM14-Ex-EX301	
Kirkland_Main-354	Kirkland_Manholes-2596	262.84	Kirkland_Manholes-2597	256.37	380.5	1.7	8	PVC	0.01	919	0	4	4	0.5	SM14-Ex-EX301	
Kirkland_Main-355	Kirkland_Manholes-853	340.38	Kirkland_Manholes-851	339.16	105.8	1.16	8	PVC	0.01	758	0	4	4	0.5		
Kirkland_Main-356	Kirkland_Manholes-851	339.16	Kirkland_Manholes-852	338.63	131.5	0.4	8	PVC	0.01	446	6	36	42	9.3		
Kirkland_Main-357	Kirkland_Manholes-852	338.63	Kirkland_Manholes-854	336.98	245.6	0.67	8	PVC	0.01	578	6	40	46	7.9		
Kirkland_Main-358	Kirkland_Manholes-854	336.98	Kirkland_Manholes-855	335.54	321	0.45	8	PVC	0.01	472	7	44	50	10.7		
Kirkland_Main-359	Kirkland_Manholes-855	335.54	Kirkland_Manholes-857	334.93	126.6	0.48	8	PVC	0.01	489	7	48	54	11.1		
Kirkland_Main-360	Kirkland_Manholes-857	334.93	Kirkland_Manholes-856	333.21	25.3	6.8	8	PVC	0.01	1,838	7	52	59	3.2		
Kirkland_Main-361	Kirkland_Manholes-858	311.1	Kirkland_Manholes-859	309.2	142	1.34	8	PVC	0.01	816	2	4	6	0.8	SM14-Ex-EX51	
Kirkland_Main-362	Kirkland_Manholes-198	52.1	Kirkland_Manholes-197	50.1	250.9	0.8	8	PVC	0.01	630	5	30	35	5.6	SM14-Ex-EX43	
Kirkland_Main-363	Kirkland_Manholes-1648	152.03	Kirkland_Manholes-1649	151.45	206.3	0.28	12	PVC	0.01	1,100	4	33	37	3.4	SM14-Ex-EX196	
Kirkland_Main-364	Kirkland_Manholes-1649	151.45	Kirkland_Manholes-1650	145.43	128.4	4.69	12	PVC	0.01	4,501	7	41	48	1.1	SM14-Ex-EX196	
Kirkland_Main-365	Kirkland_Manholes-1651	160.29	Kirkland_Manholes-1650	145.43	297.8	4.99	8	PVC	0.01	1,575	0	16	17	1.1		
Kirkland_Main-366	Kirkland_Manholes-1652	161.6	Kirkland_Manholes-1651	160.29	197.8	0.66	8	PVC	0.01	574	0	8	9	1.5		
Kirkland_Main-369	Kirkland_Manholes-1654	136.96	Kirkland_Manholes-1653	127.26	270	3.59	8	PVC	0.01	1,336	2	8	10	0.8	SM14-Ex-EX168	
Kirkland_Main-370	Kirkland_Manholes-1653	127.26	Kirkland_Manholes-1767	122.16	112.6	4.53	8	PVC	0.01	1,501	5	16	22	1.4	SM14-Ex-EX168	
Kirkland_Main-372	Kirkland_Manholes-977	225.95	Kirkland_Manholes-978	222.9	113.4	2.69	8	PVC	0.01	1,157	8	47	54	4.7		
Kirkland_Main-374	Kirkland_Manholes-2858	23.78	Kirkland_Manholes-2857	19.7	174.1	2.34	8	PVC	0.01	1,079	0	5	5	0.4	SM14-Ex-EX315	
Kirkland_Main-376	Kirkland_Manholes-2865	30.12	Kirkland_Manholes-2864	27	7.9	39.25	8	PVC	0.01	4,417	13	21	34	0.8	SM14-Ex-EX314	WW Influent Pipe
Kirkland_Main-377	Kirkland_Manholes-2866	31.02	Kirkland_Manholes-2867	30.31	15.5	4.58	8	PVC	0.01	1,509	9	15	24	1.6	SM14-Ex-EX314	
Kirkland_Main-378	Kirkland_Manholes-2867	30.31	Kirkland_Manholes-2865	30.12	118.6	0.16	8	PVC	0.01	282	9	18	27	9.6	SM14-Ex-EX314	
Kirkland_Main-379	Kirkland_Manholes-2863	49.4	Kirkland_Manholes-2866	31.02	310.1	5.93	8	PVC	0.01	1,716	7	12	19	1.1		
Kirkland_Main-380	Kirkland_Manholes-1905	395.5	Kirkland_Manholes-1906	388.2	277.5	2.63	8	PVC	0.01	1,143	9	40	49	4.3		
Kirkland_Main-381	Kirkland_Manholes-1906	388.2	Kirkland_Manholes-1908	383.29	92.4	5.31	8	PVC	0.01	1,625	17	48	65	4		
Kirkland_Main-382	Kirkland_Manholes-1908	383.29	Kirkland_Manholes-1909	380	18.3	18.02	8	PVC	0.01	2,993	26	60	85	2.8		
Kirkland_Main-383	Kirkland_Manholes-1910	392.49	Kirkland_Manholes-1908	383.29	192.6	4.78	8	PVC	0.01	1,541	8	8	16	1.1		
Kirkland_Main-386	Kirkland_Manholes-1911	394.49	Kirkland_Manholes-1910	392.49	114.9	1.74	8	PVC	0.01	930	0	4	4	0.4		
Kirkland_Main-388	Kirkland_Manholes-1912	380.62	Kirkland_Manholes-1907	380.32	64.6	0.46	8	PVC	0.01	480	17	8	25	5.2		
Kirkland_Main-389	Kirkland_Manholes-1913	381.47	Kirkland_Manholes-1912	380.62	181.1	0.47	8	PVC	0.01	483	17	4	21	4.4		
Kirkland_Main-390	Kirkland_Manholes-1915	403.84	Kirkland_Manholes-1903	399.77	113	3.6	8	PVC	0.01	1,338	1	4	5	0.4		
Kirkland_Main-391	Kirkland_Manholes-1914	376.04	Kirkland_Manholes-1916	361.73	343.6	4.16	8	PVC	0.01	1,439	0	4	4	0.3		
Kirkland_Main-392	Kirkland_Manholes-1916	361.73	Kirkland_Manholes-1965	345.05	397.2	4.2	8	PVC	0.01	1,445	29	20	49	3.4		
Kirkland_Main-393	Kirkland_Manholes-1917	413.2	Kirkland_Manholes-1919	411.73	326.8	0.45	12	PVC	0.01	1,394	57	191	248	17.8	SM14-Ex-EX215	
Kirkland_Main-394	Kirkland_Manholes-1918	411.61	Kirkland_Manholes-1920	409.24	389.6	0.61	12	PVC	0.01	1,622	88	358	445	27.5	SM14-Ex-EX215	
Kirkland_Main-395	Kirkland_Manholes-1919	411.73	Kirkland_Manholes-1918	411.61	19.4	0.61	12	PVC	0.01	1,622	58	195	253	15.6	SM14-Ex-EX215	
Kirkland_Main-396	Kirkland_Manholes-1966	418.21	Kirkland_Manholes-1918	411.61	309.4	2.13	8	PVC	0.01	1,030	29	159	188	18.2	SM14-Ex-EX216	
Kirkland_Main-397	Kirkland_Manholes-2018	417.59	Kirkland_Manholes-1920	409.24	266.4	3.13	8	PVC	0.01	1,248	1	4	5	0.4		
Kirkland_Main-398	Kirkland_Manholes-2017	412	Kirkland_Manholes-1921	405.86	284.9	2.16	8	PVC	0.01	1,035	4	20	24	2.3		
Kirkland_Main-399	Kirkland_Manholes-1921	405.86	Kirkland_Manholes-1923	399.87	337.2	1.78	12	PVC	0.01	2,771	95	393	489	17.6	SM14-Ex-EX215	Drop Connection
Kirkland_Main-400	Kirkland_Manholes-2013	413.74	Kirkland_Manholes-1922	401.71	397	3.03	8	PVC	0.01	1,227	20	95	116	9.4		
Kirkland_Main-401	Kirkland_Manholes-1924	396.12	Kirkland_Manholes-1925	391.68	40.1	11.08	8	PVC	0.01	2,347	4	16	20	0.8		
Kirkland_Main-402	Kirkland_Manholes-2012	406.67	Kirkland_Manholes-1924	396.12	354.7	2.97	8	PVC	0.01	1,216	3	12	15	1.2		
Kirkland_Main-403	Kirkland_Manholes-1926	383.42	Kirkland_Manholes-1927	378.37	328.1	1.54	12	PVC	0.01	2,579	123	528	651	25.3	SM14-Ex-EX205	
Kirkland_Main-404	Kirkland_Manholes-1927	378.37	Kirkland_Manholes-1928	375.97	126.7	1.89	12	PVC	0.01	2,862	123	532	655	22.9	SM14-Ex-EX205	
Kirkland_Main-405	Kirkland_Manholes-1922	401.71	Kirkland_Manholes-3030	397.75	20.7	19.14	8	PVC	0.01	3,085	22	99	122	3.9		
Kirkland_Main-406	Kirkland_Manholes-1923	399.87	Kirkland_Manholes-3030	397.75	24.4	8.7	12	PVC	0.01	6,130	96	397	493	8		
Kirkland_Main-407	Kirkland_Manholes-3030	397.75	Kirkland_Manholes-1925	391.68	339.3	1.79	12	PVC	0.01	2,781	118	501	619	22.2		
Kirkland_Main-408	Kirkland_Manholes-1925	391.68	Kirkland_Manholes-3031	384.74	433.2	1.6	12	PVC	0.01	2,631	123	521	643	24.5		
Kirkland_Main-409	Kirkland_Manholes-2750	105.56	Kirkland_Manholes-2749	94.38	64.8	17.26	8	PVC	0.01	2,929	24	6	30	1		
Kirkland_Main-410	Kirkland_Manholes-2751	82.43	Kirkland_Manholes-2879	68.04	243.9	5.9	8	PVC	0.01	1,713	0	6	6	0.4	SM14-Ex-EX280	
Kirkland_Main-412	Kirkland_Manholes-373	230.9	Kirkland_Manholes-1080	229.14	244	0.72	8	PVC	0.01	599	62	250	312	52.1		
Kirkland_Main-413	Kirkland_Manholes-195	48.03	Kirkland_Manholes-193	45.46	195.3	1.32	8	PVC	0.01	809	9	43	52	6.4	SM14-Ex-EX43	

Existing with Proposed Improvements - Peak Hour Flow - Pipe Capacity Table

Label	Upstream Node	Upstream Invert Elevation (ft)	Downstream Node	Downstream Invert Elevation (ft)	Length (ft)	Slope (%)	Diameter (in)	Material	Manning's n	Design Capacity (gpm)	Domestic Flow (gpm)	I/I Flow (gpm)	Total Flow (gpm)	Percent Full (%)	CIP No.	Notes
Kirkland_Main-414	Kirkland_Manholes-193	45.46	Kirkland_Manholes-192	42.9	32.1	7.96	8	PVC	0.01	1,990	9	47	56	2.8	SM14-Ex-EX43	
Kirkland_Main-415	Kirkland_Manholes-194	50.84	Kirkland_Manholes-192	50.61	58.2	0.4	8	PVC	0.01	446	0	4	4	1		Drop Connection
Kirkland_Main-416	Kirkland_Manholes-192	42.9	Kirkland_Manholes-191	42.5	357.1	0.11	8	PVC	0.01	236	9	68	77	32.7	SM14-Ex-EX44	
Kirkland_Main-417	Kirkland_Manholes-191	42.5	Kirkland_Manholes-183	41.05	287.2	0.5	8	PVC	0.01	501	9	73	82	16.3	SM14-Ex-EX44	
Kirkland_Main-418	Kirkland_Manholes-201	56.98	Kirkland_Manholes-192	42.9	368.5	3.82	8	PVC	0.01	1,378	0	13	13	0.9	SM14-Ex-EX43	
Kirkland_Main-419	Kirkland_Manholes-199	54.68	Kirkland_Manholes-198	52.1	112.6	2.29	8	PVC	0.01	1,067	4	26	30	2.8	SM14-Ex-EX43	
Kirkland_Main-420	Kirkland_Manholes-2310	256	Kirkland_Manholes-2738	255.5	66.4	0.75	8	PVC	0.01	612	8	26	33	5.5		
Kirkland_Main-421	Kirkland_Manholes-2738	255.5	Kirkland_Manholes-2752	253.8	209.4	0.81	8	PVC	0.01	635	9	30	39	6.1		
Kirkland_Main-422	Kirkland_Manholes-2754	9.95	O-40	9.81	113.1	0.12	36	PVC	0.01	13,690	506	1,846	2,653	19.4	SM14-Ex-EX10	Drop Connection
Kirkland_Main-423	Kirkland_Manholes-2761	12.79	Kirkland_Manholes-2759	11.56	416.9	0.3	36	PVC	0.01	21,139	505	1,824	2,631	12.4	SM14-Ex-EX10	
Kirkland_Main-425	Kirkland_Manholes-2759	11.56	Kirkland_Manholes-2758	11.2	391.7	0.09	36	PVC	0.01	11,798	505	1,829	2,635	22.3	SM14-Ex-EX10	
Kirkland_Main-426	Kirkland_Manholes-2758	11.2	Kirkland_Manholes-2757	10.95	117.7	0.21	36	PVC	0.01	17,933	506	1,833	2,640	14.7	SM14-Ex-EX10	
Kirkland_Main-428	Kirkland_Manholes-217	183.22	Kirkland_Manholes-230	172.81	258.2	4.03	8	PVC	0.01	1,416	40	111	151	10.7		
Kirkland_Main-429	Kirkland_Manholes-228	142.32	Kirkland_Manholes-232	112.59	208.3	14.27	8	PVC	0.01	2,663	45	128	173	6.5		
Kirkland_Main-430	Kirkland_Manholes-226	219.39	Kirkland_Manholes-225	214.73	200.7	2.32	8	PVC	0.01	1,074	7	34	41	3.8		
Kirkland_Main-431	Kirkland_Manholes-225	214.73	Kirkland_Manholes-223	193.39	169.1	12.62	8	PVC	0.01	2,505	9	38	47	1.9		
Kirkland_Main-432	Kirkland_Manholes-223	193.39	Kirkland_Manholes-224	189.69	263.2	1.41	8	PVC	0.01	836	18	68	87	10.4		
Kirkland_Main-433	Kirkland_Manholes-222	194.04	Kirkland_Manholes-223	193.39	133.1	0.49	8	PVC	0.01	493	9	26	34	7		
Kirkland_Main-434	Kirkland_Manholes-221	194.75	Kirkland_Manholes-222	194.04	121.4	0.58	8	PVC	0.01	539	8	21	29	5.5		
Kirkland_Main-435	Kirkland_Manholes-219	195.26	Kirkland_Manholes-221	194.75	115.1	0.44	8	PVC	0.01	469	7	17	24	5.2		
Kirkland_Main-436	Kirkland_Manholes-220	211.06	Kirkland_Manholes-219	195.26	185.5	8.52	8	PVC	0.01	2,057	4	9	13	0.6		
Kirkland_Main-437	Kirkland_Manholes-218	197.04	Kirkland_Manholes-219	195.26	182.3	0.98	8	PVC	0.01	697	2	4	6	0.9		
Kirkland_Main-438	Kirkland_Manholes-233	215.48	Kirkland_Manholes-220	211.06	169.3	2.61	8	PVC	0.01	1,139	3	4	7	0.6		
Kirkland_Main-439	Kirkland_Manholes-224	189.69	Kirkland_Manholes-211	186.37	292.8	1.13	8	PVC	0.01	751	19	73	91	12.2		
Kirkland_Main-440	Kirkland_Manholes-266	97.98	Kirkland_Manholes-267	95.34	145	1.82	8	PVC	0.01	951	33	83	116	12.2	SM10	If flow exceeds capacity, overflow MH will be activated; model appropriately.
Kirkland_Main-441	Kirkland_Manholes-265	110.6	Kirkland_Manholes-266	97.98	184.6	6.84	8	PVC	0.01	1,844	31	79	110	6	SM10	
Kirkland_Main-442	Kirkland_Manholes-262	118.9	Kirkland_Manholes-265	110.6	150.8	5.51	8	PVC	0.01	1,654	30	75	105	6.3	SM10	If flow exceeds capacity, overflow MH will be activated; model appropriately.
Kirkland_Main-443	Kirkland_Manholes-261	130.12	Kirkland_Manholes-262	118.9	278.9	4.02	8	PVC	0.01	1,414	27	70	98	6.9	SM10	
Kirkland_Main-444	Kirkland_Manholes-258	141.4	Kirkland_Manholes-261	130.12	280.6	4.02	8	PVC	0.01	1,414	24	66	90	6.3	SM10	
Kirkland_Main-445	Kirkland_Manholes-527	146.55	Kirkland_Manholes-258	141.4	279.2	1.84	8	PVC	0.01	958	23	62	84	8.8	SM10	
Kirkland_Main-446	Kirkland_Manholes-259	136.12	Kirkland_Manholes-260	130.49	137.7	4.09	8	PVC	0.01	1,426	1	4	6	0.4	SM10	
Kirkland_Main-447	Kirkland_Manholes-260	130.49	Kirkland_Manholes-251	119.87	263.8	4.03	8	PVC	0.01	1,415	3	9	11	0.8	SM10	
Kirkland_Main-448	Kirkland_Manholes-251	119.87	Kirkland_Manholes-250	115.74	110.4	3.74	8	PVC	0.01	1,363	3	13	16	1.2	SM14-Ex-EX55	
Kirkland_Main-449	Kirkland_Manholes-253	121.6	Kirkland_Manholes-254	100.7	323.7	6.46	8	PVC	0.01	1,791	31	77	108	6	SM14-Ex-EX40	
Kirkland_Main-450	Kirkland_Manholes-252	142.57	Kirkland_Manholes-253	121.6	327.2	6.41	8	PVC	0.01	1,785	31	73	103	5.8	SM14-Ex-EX40	
Kirkland_Main-451	Kirkland_Manholes-257	165.98	Kirkland_Manholes-252	142.57	284	8.24	8	PVC	0.01	2,024	30	64	94	4.6	SM14-Ex-EX57	
Kirkland_Main-452	Kirkland_Manholes-234	184.45	Kirkland_Manholes-257	165.98	280.4	6.59	8	PVC	0.01	1,810	22	51	73	4	SM14-Ex-EX57	
Kirkland_Main-453	Kirkland_Manholes-1133	181.56	Kirkland_Manholes-257	165.98	274.2	5.68	8	PVC	0.01	1,681	7	9	15	0.9	SM14-Ex-EX58	
Kirkland_Main-454	Kirkland_Manholes-231	144.64	Kirkland_Manholes-236	135.22	190.5	4.95	8	PVC	0.01	1,568	1	4	5	0.3	SM14-Ex-EX56	
Kirkland_Main-455	Kirkland_Manholes-235	144.29	Kirkland_Manholes-236	135.22	77.1	11.76	8	PVC	0.01	2,418	1	4	6	0.2	SM14-Ex-EX56	
Kirkland_Main-456	Kirkland_Manholes-236	135.22	Kirkland_Manholes-237	112.26	221.2	10.38	8	PVC	0.01	2,271	3	13	16	0.7	SM14-Ex-EX56	
Kirkland_Main-457	Kirkland_Manholes-232	112.59	Kirkland_Manholes-237	112.26	229.8	0.14	8	PVC	0.01	267	45	132	177	66.4	SM14-Ex-EX41	
Kirkland_Main-458	Kirkland_Manholes-237	112.26	Kirkland_Manholes-254	100.7	413.4	2.8	8	PVC	0.01	1,179	49	149	199	16.9	SM14-Ex-EX41	
Kirkland_Main-459	Kirkland_Manholes-254	100.7	Kirkland_Manholes-255	81.45	344	5.6	8	PVC	0.01	1,668	81	230	311	18.7	SM14-Ex-EX40	
Kirkland_Main-460	Kirkland_Manholes-249	98.75	Kirkland_Manholes-248	82.01	263.5	6.35	8	PVC	0.01	1,777	1	4	5	0.3	SM14-Ex-EX39	
Kirkland_Main-461	Kirkland_Manholes-255	81.45	Kirkland_Manholes-256	63.52	326.4	5.49	8	PVC	0.01	1,653	83	235	317	19.2	SM14-Ex-EX40	
Kirkland_Main-462	Kirkland_Manholes-256	63.52	Kirkland_Manholes-245	59.23	36.4	11.78	8	PVC	0.01	2,420	83	239	322	13.3	SM14-Ex-EX40	
Kirkland_Main-463	Kirkland_Manholes-248	82.01	Kirkland_Manholes-245	59.23	346.7	6.57	8	PVC	0.01	1,807	2	9	10	0.6	SM14-Ex-EX39	
Kirkland_Main-464	Kirkland_Manholes-245	59.23	Kirkland_Manholes-246	59.12	26.8	0.4	12	PVC	0.01	1,315	86	252	338	25.7	SM14-Ex-EX40	Drop Connection
Kirkland_Main-465	Kirkland_Manholes-247	65.14	Kirkland_Manholes-246	64.57	142.8	0.4	8	PVC	0.01	446	51	143	194	43.4	SM14-Ex-EX38	Drop Connection
Kirkland_Main-466	Kirkland_Manholes-291	21.49	Kirkland_Manholes-290	19.2	13	17.62	12	PVC	0.01	8,726	44	64	107	1.2	SM10	
Kirkland_Main-467	Kirkland_Manholes-290	19.2	ROSEPT_WETWELL	14.96	16.7	25.32	8	PVC	0.01	3,548	52	86	138	3.9	SM10	
Kirkland_Main-468	Kirkland_Manholes-289	31.71	Kirkland_Manholes-287	23.53	51	16.05	8	PVC	0.01	2,825	9	22	32	1.1	SM10	
Kirkland_Main-469	Kirkland_Manholes-288	19.33	Kirkland_Manholes-290	19.2	135.3	0.1	8	PVC	0.01	219	7	19	26	12	SM10	
Kirkland_Main-470	Kirkland_Manholes-287	23.53	Kirkland_Manholes-291	21.49	128.7	1.58	8	PVC	0.01	887	44	61	104	11.7	SM10	
Kirkland_Main-471	Kirkland_Manholes-286	24.15	Kirkland_Manholes-287	23.53	96.6	0.64	12	PVC	0.01	1,665	34	35	70	4.2	SM10	
Kirkland_Main-472	Kirkland_Manholes-285	19.59	Kirkland_Manholes-288	19.33	259.3	0.1	8	PVC	0.01	223	7	16	23	10.4	SM10	
Kirkland_Main-473	Kirkland_Manholes-292	22.37	Kirkland_Manholes-293	22.09	126.6	0.22	12	PVC	0.01	967	0	9	9	0.9	SM14-Ex-EX37	
Kirkland_Main-474	Kirkland_Manholes-297	22.86	Kirkland_Manholes-296	21.27	137.3	1.16	8	PVC	0.01	759	2	3	5	0.7	SM14-Ex-EX36	
Kirkland_Main-475	Kirkland_Manholes-296	21.27	Kirkland_Manholes-295	20.59	313.5	0.22	8	PVC	0.01	328	4	6	10	3.1	SM10	

Existing with Proposed Improvements - Peak Hour Flow - Pipe Capacity Table

Label	Upstream Node	Upstream Invert Elevation (ft)	Downstream Node	Downstream Invert Elevation (ft)	Length (ft)	Slope (%)	Diameter (in)	Material	Manning's n	Design Capacity (gpm)	Domestic Flow (gpm)	I/I Flow (gpm)	Total Flow (gpm)	Percent Full (%)	CIP No.	Notes
Kirkland_Main-476	Kirkland_Manholes-295	20.59	Kirkland_Manholes-294	20.11	95.2	0.5	8	PVC	0.01	501	5	10	14	2.8	SM10	
Kirkland_Main-477	Kirkland_Manholes-294	20.11	Kirkland_Manholes-285	19.59	185.3	0.28	8	PVC	0.01	373	6	13	19	5	SM10	
Kirkland_Main-478	Kirkland_Manholes-311	21.29	Kirkland_Manholes-312	20.99	124.6	0.24	12	PVC	0.01	1,020	4	35	39	3.9	SM14-Ex-EX37	
Kirkland_Main-479	Kirkland_Manholes-312	20.99	Kirkland_Manholes-306	19.99	281.9	0.35	12	PVC	0.01	1,238	5	44	49	4	SM14-Ex-EX37	
Kirkland_Main-480	Kirkland_Manholes-362	216.81	Kirkland_Manholes-361	216.74	35.2	0.2	21	PVC	0.01	4,142	528	1,935	2,463	59.5		
Kirkland_Main-481	Kirkland_Manholes-367	213.02	Kirkland_Manholes-368	212.3	160.3	0.45	18	PVC	0.01	4,107	539	1,999	2,538	61.8		
Kirkland_Main-482	Kirkland_Manholes-368	212.3	Kirkland_Manholes-369	208.86	249.4	1.38	18	PVC	0.01	7,198	539	2,003	2,542	35.3		
Kirkland_Main-483	Kirkland_Manholes-369	208.86	Kirkland_Manholes-370	206.64	246.4	0.9	18	PVC	0.01	5,817	548	2,034	2,583	44.4		
Kirkland_Main-484	Kirkland_Manholes-371	213.58	Kirkland_Manholes-2872	207.03	240.7	2.72	8	PVC	0.01	1,163	0	4	4	0.3		
Kirkland_Main-485	Kirkland_Manholes-372	241.98	Kirkland_Manholes-373	230.9	143.8	7.71	8	PVC	0.01	1,957	0	4	4	0.2		
Kirkland_Main-486	Kirkland_Manholes-375	234.87	Kirkland_Manholes-373	230.9	271	1.46	8	PVC	0.01	853	61	242	303	35.5		
Kirkland_Main-487	Kirkland_Manholes-374	244.09	Kirkland_Manholes-375	234.87	143.4	6.43	8	PVC	0.01	1,788	1	4	4	0.3		
Kirkland_Main-488	Kirkland_Manholes-535	472.49	Kirkland_Manholes-536	466.05	355.6	1.81	8	PVC	0.01	949	2	16	18	1.9		
Kirkland_Main-489	Kirkland_Manholes-536	466.05	Kirkland_Manholes-539	454.38	292.6	3.99	8	PVC	0.01	1,408	4	20	24	1.7		
Kirkland_Main-490	Kirkland_Manholes-537	455.9	Kirkland_Manholes-539	454.38	190.6	0.8	8	PVC	0.01	630	1	4	5	0.8		
Kirkland_Main-491	Kirkland_Manholes-539	454.38	Kirkland_Manholes-540	453.6	170.3	0.46	8	PVC	0.01	477	8	60	67	14.1		
Kirkland_Main-492	Kirkland_Manholes-540	453.6	Kirkland_Manholes-541	450.25	325.9	1.03	8	PVC	0.01	715	8	64	72	10.1		
Kirkland_Main-493	Kirkland_Manholes-538	457.48	Kirkland_Manholes-1977	454.61	403.8	0.71	8	PVC	0.01	594	1	4	5	0.8		
Kirkland_Main-494	Kirkland_Manholes-596	110.91	Kirkland_Manholes-600	91.95	293.8	6.45	8	PVC	0.01	1,791	89	354	443	24.7	SM14-Ex-EX117	
Kirkland_Main-495	Kirkland_Manholes-598	118.14	Kirkland_Manholes-596	110.91	360.7	2	8	PVC	0.01	998	3	8	11	1.1	SM14-Ex-EX159	
Kirkland_Main-496	Kirkland_Manholes-606	111.69	Kirkland_Manholes-614	87.89	289.9	8.21	8	PVC	0.01	2,020	39	165	203	10.1	SM14-Ex-EX96	
Kirkland_Main-497	Kirkland_Manholes-238	85.65	Kirkland_Manholes-239	27.77	394.9	14.66	8	PVC	0.01	2,699	1	4	5	0.2		
Kirkland_Main-502	Kirkland_Manholes-200	55.31	Kirkland_Manholes-199	54.68	46	1.37	8	PVC	0.01	825	4	21	25	3		
Kirkland_Main-503	Kirkland_Manholes-2330	295.18	Kirkland_Manholes-263	292.03	86.5	3.64	8	PVC	0.01	1,346	29	95	124	9.2	SM14-Ex-EX252	
Kirkland_Main-504	Kirkland_Manholes-2768	263.56	Kirkland_Manholes-2769	260.32	376.9	0.86	8	PVC	0.01	654	1	4	5	0.8		
Kirkland_Main-505	Kirkland_Manholes-280	27.37	Kirkland_Manholes-286	24.15	372.8	0.86	12	PVC	0.01	1,932	32	29	61	3.2	SM10	
Kirkland_Main-509	Kirkland_Manholes-313	62.05	Kirkland_Manholes-286	24.15	229.1	16.54	8	PVC	0.01	2,868	1	3	5	0.2	SM10	
Kirkland_Main-510	Kirkland_Manholes-804	284.1	Kirkland_Manholes-319	281.98	84.4	2.51	8	PVC	0.01	1,117	8	32	40	3.6		
Kirkland_Main-511	Kirkland_Manholes-319	281.98	Kirkland_Manholes-320	278.6	79.1	4.27	8	PVC	0.01	1,458	9	36	45	3.1		
Kirkland_Main-512	Kirkland_Manholes-320	278.6	Kirkland_Manholes-321	265.74	204.3	6.3	8	PVC	0.01	1,769	10	40	49	2.8		
Kirkland_Main-513	Kirkland_Manholes-321	265.74	Kirkland_Manholes-322	263.88	72.5	2.57	8	PVC	0.01	1,129	10	44	54	4.8		
Kirkland_Main-514	Kirkland_Manholes-322	263.88	Kirkland_Manholes-323	244.99	177.9	10.62	8	PVC	0.01	2,297	20	75	95	4.1		
Kirkland_Main-515	Kirkland_Manholes-803	278.64	Kirkland_Manholes-322	263.88	141.7	10.41	8	PVC	0.01	2,275	9	28	37	1.6		
Kirkland_Main-516	Kirkland_Manholes-323	244.99	Kirkland_Manholes-324	240.21	186.2	2.57	8	PVC	0.01	1,130	20	79	100	8.8		
Kirkland_Main-517	Kirkland_Manholes-815	248.52	Kirkland_Manholes-324	240.21	137.2	6.05	8	PVC	0.01	1,735	6	20	26	1.5		
Kirkland_Main-518	Kirkland_Manholes-324	240.21	Kirkland_Manholes-325	236.62	39.9	9.01	8	PVC	0.01	2,116	27	103	130	6.1		
Kirkland_Main-519	Kirkland_Manholes-325	236.62	Kirkland_Manholes-327	230.43	89	6.95	8	PVC	0.01	1,859	27	111	139	7.5		
Kirkland_Main-520	Kirkland_Manholes-326	238.6	Kirkland_Manholes-325	236.62	142.9	1.39	8	PVC	0.01	830	0	4	4	0.5		
Kirkland_Main-521	Kirkland_Manholes-327	230.43	Kirkland_Manholes-328	228.68	117.4	1.49	8	PVC	0.01	861	28	115	143	16.6		
Kirkland_Main-522	Kirkland_Manholes-328	228.68	Kirkland_Manholes-329	227.48	172.3	0.7	8	PVC	0.01	588	28	119	148	25.1		
Kirkland_Main-523	Kirkland_Manholes-329	227.48	Kirkland_Manholes-814	224.81	265.5	1.01	8	PVC	0.01	707	30	123	153	21.6		
Kirkland_Main-524	Kirkland_Manholes-335	225.11	Kirkland_Manholes-330	224.74	400.7	0.09	21	PVC	0.01	2,809	491	1,713	2,204	78.5	SM14-2021-DF4	
Kirkland_Main-525	Kirkland_Manholes-330	224.74	Kirkland_Manholes-331	223	199.5	0.87	21	PVC	0.01	8,635	492	1,716	2,208	25.6		
Kirkland_Main-526	Kirkland_Manholes-331	223	Kirkland_Manholes-332	219.57	217.5	1.58	21	PVC	0.01	11,610	492	1,720	2,212	19.1		
Kirkland_Main-527	Kirkland_Manholes-332	219.57	Kirkland_Manholes-334	218.68	182	0.49	21	PVC	0.01	6,464	493	1,724	2,217	34.3		
Kirkland_Main-528	Kirkland_Manholes-333	225.59	Kirkland_Manholes-334	218.68	199.5	3.46	8	PVC	0.01	1,312	32	183	215	16.4		
Kirkland_Main-529	Kirkland_Manholes-352	234.2	Kirkland_Manholes-333	225.59	382.7	2.25	8	PVC	0.01	1,058	31	179	210	19.9		
Kirkland_Main-530	Kirkland_Manholes-334	218.68	Kirkland_Manholes-356	218.57	161	0.07	30	PVC	0.01	6,255	527	1,915	2,442	39	SM14-Ex-EX48	
Kirkland_Main-531	Kirkland_Manholes-337	291.09	Kirkland_Manholes-338	268.5	343.3	6.58	8	PVC	0.01	1,809	10	64	73	4		
Kirkland_Main-532	Kirkland_Manholes-343	274.46	Kirkland_Manholes-338	268.5	356.6	1.67	8	PVC	0.01	912	1	4	5	0.6		
Kirkland_Main-533	Kirkland_Manholes-338	268.5	Kirkland_Manholes-339	249.19	361.1	5.35	8	PVC	0.01	1,631	13	72	84	5.2		
Kirkland_Main-534	Kirkland_Manholes-1543	289	Kirkland_Manholes-1544	284.46	416.8	1.09	8	PVC	0.01	736	7	20	27	3.7	SM14-Ex-EX123	
Kirkland_Main-535	Kirkland_Manholes-1545	272.4	Kirkland_Manholes-765	257.59	249.5	5.94	8	PVC	0.01	1,718	18	68	85	5	SM14-Ex-EX121	
Kirkland_Main-536	Kirkland_Manholes-1571	242.76	Kirkland_Manholes-1572	242.19	318.3	0.18	15	PVC	0.01	1,595	191	445	636	39.9		
Kirkland_Main-537	Kirkland_Manholes-1573	242.13	Kirkland_Manholes-1574	241.8	67.8	0.49	18	PVC	0.01	4,277	191	453	644	15.1	SM14-Ex-EX133	
Kirkland_Main-538	Kirkland_Manholes-1572	242.19	Kirkland_Manholes-1573	242.13	243.5	0.02	18	PVC	0.01	962	191	449	640	66.6	SM14-Ex-EX133	
Kirkland_Main-539	Kirkland_Manholes-1576	330.99	Kirkland_Manholes-1575	314.42	250.6	6.61	8	PVC	0.01	1,813	3	28	31	1.7		
Kirkland_Main-540	Kirkland_Manholes-1577	341.43	Kirkland_Manholes-1576	330.99	181.7	5.75	8	PVC	0.01	1,690	3	24	27	1.6		
Kirkland_Main-541	Kirkland_Manholes-1578	344.66	Kirkland_Manholes-1577	341.43	47.3	6.83	8	PVC	0.01	1,843	0	4	4	0.2		
Kirkland_Main-542	Kirkland_Manholes-1579	359.44	Kirkland_Manholes-1580	335.19	206.7	11.73	12	PVC	0.01	7,121	155	604	759	10.7	SM14-Ex-EX205	
Kirkland_Main-543	Kirkland_Manholes-1580	335.19	Kirkland_Manholes-1581	324.95	171.4	5.98	12	PVC	0.01	5,081	156	608	764	15	SM14-Ex-EX205	
Kirkland_Main-544	Kirkland_Manholes-1582	332.21	Kirkland_Manholes-1581	324.95	160.1	4.53	12	PVC	0.01	4,426	41	191	232	5.2	SM14-Ex-EX206	

Existing with Proposed Improvements - Peak Hour Flow - Pipe Capacity Table

Label	Upstream Node	Upstream Invert Elevation (ft)	Downstream Node	Downstream Invert Elevation (ft)	Length (ft)	Slope (%)	Diameter (in)	Material	Manning's n	Design Capacity (gpm)	Domestic Flow (gpm)	I/I Flow (gpm)	Total Flow (gpm)	Percent Full (%)	CIP No.	Notes
Kirkland_Main-545	Kirkland_Manholes-1581	324.95	Kirkland_Manholes-1623	294.92	398.1	7.54	12	PVC	0.01	5,709	197	803	999	17.5	SM14-Ex-EX205	
Kirkland_Main-546	Kirkland_Manholes-2681	334.86	Kirkland_Manholes-3028	332.75	289	0.73	12	PVC	0.01	1,776	38	171	209	11.7	SM14-Ex-EX206	
Kirkland_Main-547	Kirkland_Manholes-1583	333.82	Kirkland_Manholes-1582	332.21	16.6	9.69	8	PVC	0.01	2,195	2	8	10	0.5		
Kirkland_Main-548	Kirkland_Manholes-1584	346.72	Kirkland_Manholes-1583	333.82	203.1	6.35	8	PVC	0.01	1,777	2	4	6	0.4		
Kirkland_Main-549	Kirkland_Manholes-1575	314.42	Kirkland_Manholes-1953	290.71	326.1	7.27	8	PVC	0.01	1,901	3	32	35	1.8		
Kirkland_Main-550	Kirkland_Manholes-1150	151.79	Kirkland_Manholes-1151	143.36	156.6	5.38	8	PVC	0.01	1,636	9	58	67	4.1	SM10	
Kirkland_Main-551	Kirkland_Manholes-1151	143.36	Kirkland_Manholes-1152	135.47	158.3	4.98	8	PVC	0.01	1,574	10	66	76	4.8	SM10	
Kirkland_Main-552	Kirkland_Manholes-1170	153.9	Kirkland_Manholes-1150	151.79	249.2	0.85	8	PVC	0.01	649	2	8	10	1.5	SM10	
Kirkland_Main-553	Kirkland_Manholes-306	19.99	Kirkland_Manholes-1183	19.89	217.6	0.05	12	PVC	0.01	446	27	159	186	41.8	SM14-Ex-EX37	
Kirkland_Main-554	Kirkland_Manholes-304	75.98	Kirkland_Manholes-303	75.38	34.2	1.76	8	PVC	0.01	934	16	62	77	8.3	SM10	
Kirkland_Main-555	Kirkland_Manholes-303	75.38	Kirkland_Manholes-305	74.69	171.5	0.4	8	PVC	0.01	447	16	71	86	19.3	SM10	
Kirkland_Main-556	Kirkland_Manholes-302	78.72	Kirkland_Manholes-304	75.98	177.4	1.54	8	PVC	0.01	876	15	53	68	7.8	SM10	
Kirkland_Main-557	Kirkland_Manholes-307	105.6	Kirkland_Manholes-302	78.72	385.1	6.98	8	PVC	0.01	1,863	14	44	58	3.1	SM10	
Kirkland_Main-558	Kirkland_Manholes-301	74.29	Kirkland_Manholes-300	70.39	326.3	1.2	8	PVC	0.01	771	2	3	5	0.7	SM10	
Kirkland_Main-559	Kirkland_Manholes-1316	272.4	Kirkland_Manholes-1317	271.64	47	1.62	8	PVC	0.01	896	1	12	13	1.4		
Kirkland_Main-563	Kirkland_Manholes-300	70.39	Kirkland_Manholes-299	66.63	324	1.16	8	PVC	0.01	760	6	6	12	1.6	SM10	
Kirkland_Main-564	Kirkland_Manholes-388	297.69	Kirkland_Manholes-389	295.78	310.4	0.62	8	PVC	0.01	553	8	20	28	5	SM14-Ex-EX33	
Kirkland_Main-565	Kirkland_Manholes-390	304.37	Kirkland_Manholes-391	302.9	200.9	0.73	8	PVC	0.01	603	1	4	5	0.9	SM14-Ex-EX34	
Kirkland_Main-566	Kirkland_Manholes-392	305	Kirkland_Manholes-391	302.9	116.9	1.8	8	PVC	0.01	945	28	119	147	15.6	SM14-Ex-EX50	
Kirkland_Main-567	Kirkland_Manholes-2568	299.24	Kirkland_Manholes-2592	294.57	199	2.35	8	PVC	0.01	1,080	2	4	6	0.5	SM14-Ex-EX306	
Kirkland_Main-568	Kirkland_Manholes-2571	325.07	Kirkland_Manholes-2570	299.81	188.9	13.37	8	PVC	0.01	2,578	1	4	5	0.2		
Kirkland_Main-569	Kirkland_Manholes-2602	234.19	Kirkland_Manholes-2601	228.74	344.4	1.58	8	PVC	0.01	887	3	12	14	1.6	SM14-Ex-EX300	
Kirkland_Main-570	Kirkland_Manholes-2603	296.02	Kirkland_Manholes-2588	292.14	272.1	1.43	8	PVC	0.01	842	11	24	34	4.1	SM14-Ex-EX304	
Kirkland_Main-573	Kirkland_Manholes-2610	205.21	Kirkland_Manholes-2609	193.8	79.9	14.28	8	PVC	0.01	2,664	1	4	5	0.2		
Kirkland_Main-574	Kirkland_Manholes-1380	448.63	Kirkland_Manholes-1386	447.82	272.6	0.3	8	PVC	0.01	384	6	8	14	3.6	SM14-Ex-EX219	
Kirkland_Main-575	Kirkland_Manholes-1383	449.36	Kirkland_Manholes-1380	448.63	231	0.32	8	PVC	0.01	396	4	4	8	2	SM14-Ex-EX219	
Kirkland_Main-576	Kirkland_Manholes-1381	441.1	Kirkland_Manholes-1382	428.64	320.7	3.88	8	PVC	0.01	1,390	0	4	4	0.3		
Kirkland_Main-577	Kirkland_Manholes-1384	452.11	Kirkland_Manholes-1385	450.86	206.1	0.61	8	PVC	0.01	549	1	4	5	0.9		
Kirkland_Main-578	Kirkland_Manholes-1385	450.86	Kirkland_Manholes-1386	447.82	69.1	4.4	8	PVC	0.01	1,479	2	8	10	0.7		
Kirkland_Main-579	Kirkland_Manholes-1386	447.82	Kirkland_Manholes-1387	446.83	200.1	0.49	8	PVC	0.01	496	8	20	28	5.7	SM14-Ex-EX219	
Kirkland_Main-580	Kirkland_Manholes-1387	446.83	Kirkland_Manholes-1388	445.49	260.4	0.51	8	PVC	0.01	506	28	95	124	24.4	SM14-Ex-EX219	
Kirkland_Main-581	Kirkland_Manholes-1388	445.49	Kirkland_Manholes-1389	444.08	265.9	0.53	8	PVC	0.01	513	30	99	129	25.2	SM14-Ex-EX219	
Kirkland_Main-582	Kirkland_Manholes-1390	457.46	Kirkland_Manholes-1389	444.08	260.4	5.14	8	PVC	0.01	1,598	6	24	29	1.8	SM14-Ex-EX218	
Kirkland_Main-583	Kirkland_Manholes-1389	444.08	Kirkland_Manholes-532	443.04	161.2	0.65	8	PVC	0.01	566	37	127	164	29	SM14-Ex-EX218	
Kirkland_Main-584	Kirkland_Manholes-532	443.04	Kirkland_Manholes-533	442.23	169.5	0.48	8	PVC	0.01	487	41	131	172	35.2	SM14-Ex-EX218	
Kirkland_Main-585	Kirkland_Manholes-533	442.23	Kirkland_Manholes-534	432.55	269	3.6	8	PVC	0.01	1,337	42	135	177	13.3	SM14-Ex-EX218	
Kirkland_Main-586	Kirkland_Manholes-530	464.47	Kirkland_Manholes-1390	457.46	207.2	3.38	8	PVC	0.01	1,297	5	20	25	1.9	SM14-Ex-EX218	
Kirkland_Main-587	Kirkland_Manholes-1391	471.35	Kirkland_Manholes-530	464.47	201.7	3.41	8	PVC	0.01	1,302	2	12	14	1.1	SM14-Ex-EX218	
Kirkland_Main-588	Kirkland_Manholes-543	448.24	Kirkland_Manholes-1387	446.83	163.4	0.86	8	PVC	0.01	655	19	72	91	13.9		
Kirkland_Main-589	Kirkland_Manholes-531	468.8	Kirkland_Manholes-530	464.47	218	1.99	8	PVC	0.01	994	1	4	5	0.5		
Kirkland_Main-590	Kirkland_Manholes-339	249.19	Kirkland_Manholes-340	235.81	214	6.25	8	PVC	0.01	1,763	13	75	89	5		
Kirkland_Main-592	Kirkland_Manholes-2009	426.97	Kirkland_Manholes-2010	424.43	206.3	1.23	8	PVC	0.01	782	11	52	63	8		
Kirkland_Main-593	Kirkland_Manholes-2011	417.75	Kirkland_Manholes-2012	406.67	363.8	3.05	8	PVC	0.01	1,230	2	8	10	0.8		
Kirkland_Main-594	Kirkland_Manholes-1989	447.97	Kirkland_Manholes-1990	439.8	245.1	3.33	8	PVC	0.01	1,287	2	8	10	0.8		
Kirkland_Main-595	Kirkland_Manholes-1990	439.8	Kirkland_Manholes-1991	431.18	131.7	6.55	8	PVC	0.01	1,804	5	28	33	1.8		
Kirkland_Main-596	Kirkland_Manholes-556	457.9	Kirkland_Manholes-3007	456.9	222.1	0.45	8	PVC	0.01	473	1	4	5	1		
Kirkland_Main-597	Kirkland_Manholes-2495	184.35	Kirkland_Manholes-2494	170.93	403.6	3.33	8	PVC	0.01	1,286	12	20	32	2.5	SM14-Ex-EX236	
Kirkland_Main-598	Kirkland_Manholes-2496	191.57	Kirkland_Manholes-2495	184.35	278.9	2.59	8	PVC	0.01	1,134	10	16	26	2.3	SM14-Ex-EX236	
Kirkland_Main-599	Kirkland_Manholes-2497	194.88	Kirkland_Manholes-2498	194.29	45.2	1.3	8	PVC	0.01	805	8	8	16	2	SM14-Ex-EX236	
Kirkland_Main-600	Kirkland_Manholes-2498	194.29	Kirkland_Manholes-2496	191.57	77.4	3.51	8	PVC	0.01	1,322	9	12	21	1.6	SM14-Ex-EX236	
Kirkland_Main-601	Kirkland_Manholes-2237	143.38	Kirkland_Manholes-2499	140.38	322.1	0.93	8	PVC	0.01	680	3	6	10	1.4	SM14-Ex-EX225	
Kirkland_Main-602	Kirkland_Manholes-2499	140.38	Kirkland_Manholes-2500	122.66	273.4	6.48	8	PVC	0.01	1,795	5	12	17	1	SM14-Ex-EX225	
Kirkland_Main-603	Kirkland_Manholes-2500	122.66	Kirkland_Manholes-2501	104.86	254.1	7.01	8	PVC	0.01	1,866	6	18	25	1.3	SM14-Ex-EX225	
Kirkland_Main-604	Kirkland_Manholes-2501	104.86	Kirkland_Manholes-2502	102.46	257.9	0.93	8	PVC	0.01	680	9	24	33	4.8	SM14-Ex-EX225	
Kirkland_Main-605	Kirkland_Manholes-2502	102.46	Kirkland_Manholes-2503	101.49	223.5	0.43	8	PVC	0.01	464	13	30	43	9.2	SM14-Ex-EX225	
Kirkland_Main-606	Kirkland_Manholes-2504	121.59	Kirkland_Manholes-2503	101.49	254	7.91	8	PVC	0.01	1,983	5	12	17	0.9	SM14-Ex-EX223	
Kirkland_Main-607	Kirkland_Manholes-2503	101.49	Kirkland_Manholes-2507	88.29	256.5	5.15	8	PVC	0.01	1,599	18	49	67	4.2	SM14-Ex-EX223	
Kirkland_Main-608	Kirkland_Manholes-2505	125.11	Kirkland_Manholes-2504	121.59	387.3	0.91	8	PVC	0.01	672	2	6	9	1.3	SM14-Ex-EX223	
Kirkland_Main-609	Kirkland_Manholes-2763	13.15	Kirkland_Manholes-2762	13.1	227.4	0.02	36	PVC	0.01	5,771	446	1,551	2,298	39.8	SM14-Ex-EX10	
Kirkland_Main-610	Kirkland_Manholes-2238	92.13	Kirkland_Manholes-2118	82.91	342.6	2.69	8	PVC	0.01	1,157	4	12	17	1.4	SM14-Ex-EX224	
Kirkland_Main-611	Kirkland_Manholes-2118	82.91	Kirkland_Manholes-2146	75.22	210	3.66	8	PVC	0.01	1,349	27	79	106	7.9	SM14-Ex-EX223	
Kirkland_Main-612	Kirkland_Manholes-2506	86.22	Kirkland_Manholes-2118	82.91	249.1	1.33	8	PVC	0.01	813	21	61	81	10	SM14-Ex-EX223	

Existing with Proposed Improvements - Peak Hour Flow - Pipe Capacity Table

Label	Upstream Node	Upstream Invert Elevation (ft)	Downstream Node	Downstream Invert Elevation (ft)	Length (ft)	Slope (%)	Diameter (in)	Material	Manning's n	Design Capacity (gpm)	Domestic Flow (gpm)	I/I Flow (gpm)	Total Flow (gpm)	Percent Full (%)	CIP No.	Notes
Kirkland_Main-613	Kirkland_Manholes-2507	88.29	Kirkland_Manholes-2506	86.22	236.4	0.88	8	PVC	0.01	660	19	55	74	11.2	SM14-Ex-EX223	
Kirkland_Main-614	Kirkland_Manholes-2508	120.01	Kirkland_Manholes-2510	102.3	301.7	5.87	8	PVC	0.01	1,708	4	18	22	1.3	SM14-Ex-EX229	
Kirkland_Main-615	Kirkland_Manholes-2144	65.5	Kirkland_Manholes-2143	61.9	34.5	10.44	8	PVC	0.01	2,279	65	82	148	6.5		
Kirkland_Main-616	Kirkland_Manholes-2145	63.1	Kirkland_Manholes-2143	61.9	31.4	3.82	8	PVC	0.01	1,377	4	49	54	3.9		
Kirkland_Main-618	Kirkland_Manholes-2170	148.68	Kirkland_Manholes-2169	142.85	119.8	4.87	8	PVC	0.01	1,555	1	8	9	0.6	SM14-Ex-EX193	
Kirkland_Main-622	Kirkland_Manholes-2167	120.69	Kirkland_Manholes-2166	108.92	118.4	9.94	8	PVC	0.01	2,223	3	33	35	1.6	SM14-Ex-EX193	
Kirkland_Main-623	Kirkland_Manholes-2166	108.92	Kirkland_Manholes-2165	94.99	230.8	6.04	8	PVC	0.01	1,732	6	41	47	2.7	SM14-Ex-EX193	
Kirkland_Main-626	Kirkland_Manholes-2719	31.99	Kirkland_Manholes-2715	29.78	252.5	0.88	8	PVC	0.01	660	74	12	86	13		
Kirkland_Main-627	Kirkland_Manholes-2278	406.74	Kirkland_Manholes-2271	405.49	96	1.3	8	PVC	0.01	805	2	16	18	2.2		
Kirkland_Main-630	Kirkland_Manholes-2407	403.31	Kirkland_Manholes-2268	401.9	163.6	0.86	8	PVC	0.01	655	11	48	59	8.9	SM14-Ex-EX261	
Kirkland_Main-631	Kirkland_Manholes-2266	392.8	Kirkland_Manholes-2265	392	110.1	0.73	8	PVC	0.01	601	21	123	144	24	SM14-Ex-EX212	
Kirkland_Main-632	Kirkland_Manholes-2265	392	Kirkland_Manholes-2263	374.13	447.5	3.99	8	PVC	0.01	1,409	21	127	148	10.5	SM14-Ex-EX212	
Kirkland_Main-633	Kirkland_Manholes-2245	234.09	Kirkland_Manholes-2074	213.49	327.6	6.29	8	PVC	0.01	1,768	43	48	91	5.1	SM14-Ex-EX246	
Kirkland_Main-634	Kirkland_Manholes-2253	239.74	Kirkland_Manholes-2252	236.86	193.1	1.49	8	PVC	0.01	861	31	12	43	4.9	SM14-Ex-EX247	
Kirkland_Main-635	Kirkland_Manholes-2252	236.86	Kirkland_Manholes-2245	234.09	241.6	1.15	8	PVC	0.01	755	35	16	51	6.8	SM14-Ex-EX247	
Kirkland_Main-636	Kirkland_Manholes-2246	246.17	Kirkland_Manholes-2245	234.09	185.5	6.51	8	PVC	0.01	1,799	6	24	30	1.7	SM14-Ex-EX246	
Kirkland_Main-637	Kirkland_Manholes-2247	249.9	Kirkland_Manholes-2246	246.17	310.7	1.2	8	PVC	0.01	773	4	20	24	3.1	SM14-Ex-EX246	
Kirkland_Main-638	Kirkland_Manholes-2251	257.04	Kirkland_Manholes-2247	249.9	237.7	3	8	PVC	0.01	1,222	0	4	4	0.3	SM14-Ex-EX246	
Kirkland_Main-639	Kirkland_Manholes-2248	259.41	Kirkland_Manholes-2247	249.9	197.8	4.81	8	PVC	0.01	1,546	3	12	15	1		
Kirkland_Main-640	Kirkland_Manholes-2249	263.29	Kirkland_Manholes-2248	259.41	137.3	2.82	8	PVC	0.01	1,185	3	8	11	1		
Kirkland_Main-641	Kirkland_Manholes-2250	275.69	Kirkland_Manholes-2249	263.29	113.4	10.94	8	PVC	0.01	2,332	3	4	7	0.3		
Kirkland_Main-642	Kirkland_Manholes-2261	305.59	Kirkland_Manholes-2260	285.07	409.2	5.01	12	PVC	0.01	4,655	237	850	1,087	23.4	SM14-Ex-EX248	
Kirkland_Main-643	Kirkland_Manholes-2262	311.78	Kirkland_Manholes-2261	305.59	133.8	4.62	12	PVC	0.01	4,470	234	846	1,081	24.2	SM14-Ex-EX248	
Kirkland_Main-644	Kirkland_Manholes-21	62.08	Kirkland_Manholes-101	61.95	7	1.85	8	PVC	0.01	960	7	30	37	3.8		
Kirkland_Main-645	Kirkland_Manholes-3038	279.17	Kirkland_Manholes-3039	278.83	84.7	0.4	8	PVC	0.01	446	1	4	5	1.2		
Kirkland_Main-646	Kirkland_Manholes-3039	278.83	Kirkland_Manholes-3035	266.43	233.8	5.3	8	PVC	0.01	1,624	3	8	11	0.7		
Kirkland_Main-647	Kirkland_Manholes-3037	277.97	Kirkland_Manholes-3036	268.75	180.1	5.12	8	PVC	0.01	1,595	1	4	5	0.3		
Kirkland_Main-648	Kirkland_Manholes-3036	268.75	Kirkland_Manholes-3035	266.43	62.1	3.74	8	PVC	0.01	1,363	2	8	10	0.7		
Kirkland_Main-649	Kirkland_Manholes-1505	267	Kirkland_Manholes-3035	266.43	67.6	0.84	8	PVC	0.01	647	22	87	110	16.9		
Kirkland_Main-650	Kirkland_Manholes-3040	208.06	Kirkland_Manholes-3041	198.95	98.1	9.29	8	PVC	0.01	2,148	6	4	10	0.4		
Kirkland_Main-651	Kirkland_Manholes-3041	198.95	Kirkland_Manholes-1602	196.74	179.4	1.23	8	PVC	0.01	782	7	8	15	2		
Kirkland_Main-652	Kirkland_Manholes-3100	18.3	Kirkland_Manholes-3044	18.06	60.9	0.39	18	PVC	0.01	3,847	88	67	155	4	SM14-Ex-EX289	
Kirkland_Main-653	Kirkland_Manholes-566	483.97	Kirkland_Manholes-3045	483.35	154.3	0.4	8	PVC	0.01	446	1	4	5	1.1		
Kirkland_Main-655	Kirkland_Manholes-3046	250.83	Kirkland_Manholes-3047	250.39	298.9	0.15	8	PVC	0.01	271	1	4	5	1.9		
Kirkland_Main-656	Kirkland_Manholes-3047	250.39	Kirkland_Manholes-396	249.55	18.8	4.48	8	PVC	0.01	1,492	2	8	10	0.7		
Kirkland_Main-657	Kirkland_Manholes-3048	215.92	Kirkland_Manholes-364	215.51	48.9	0.84	21	PVC	0.01	8,463	535	1,967	2,502	29.6		
Kirkland_Main-658	Kirkland_Manholes-3051	246.2	Kirkland_Manholes-3050	235.83	120.9	8.58	8	PVC	0.01	2,065	0	4	4	0.2		
Kirkland_Main-659	Kirkland_Manholes-3050	235.83	Kirkland_Manholes-3049	221.64	223.5	6.35	8	PVC	0.01	1,776	1	8	9	0.5		
Kirkland_Main-660	Kirkland_Manholes-3049	221.64	Kirkland_Manholes-3048	215.92	33.6	17.02	8	PVC	0.01	2,909	2	12	13	0.5		
Kirkland_Main-661	Kirkland_Manholes-3054	230.52	Kirkland_Manholes-3053	227.56	179.1	1.65	8	PVC	0.01	906	2	4	6	0.6		
Kirkland_Main-662	Kirkland_Manholes-3052	228.3	Kirkland_Manholes-3053	227.56	79.8	0.93	8	PVC	0.01	679	0	4	4	0.6		
Kirkland_Main-663	Kirkland_Manholes-3053	227.56	Kirkland_Manholes-3055	218.26	198.6	4.68	8	PVC	0.01	1,526	3	12	14	0.9		
Kirkland_Main-664	Kirkland_Manholes-3055	218.26	Kirkland_Manholes-364	215.51	19.7	13.95	8	PVC	0.01	2,634	3	16	18	0.7		
Kirkland_Main-665	Kirkland_Manholes-3058	393.03	Kirkland_Manholes-3057	384.71	254	3.28	8	PVC	0.01	1,276	1	4	5	0.4		
Kirkland_Main-666	Kirkland_Manholes-3057	384.71	Kirkland_Manholes-3056	382.54	53.8	4.03	8	PVC	0.01	1,415	2	8	9	0.7		
Kirkland_Main-667	Kirkland_Manholes-3056	382.54	Kirkland_Manholes-3016	372.66	250.2	3.95	8	PVC	0.01	1,401	2	12	14	1		
Kirkland_Main-668	Kirkland_Manholes-3062	383.23	Kirkland_Manholes-3063	372.82	282.2	3.69	8	PVC	0.01	1,354	0	4	4	0.3		
Kirkland_Main-669	Kirkland_Manholes-3063	372.82	Kirkland_Manholes-3061	361.76	319.4	3.46	8	PVC	0.01	1,312	0	8	8	0.6		
Kirkland_Main-670	Kirkland_Manholes-3061	361.76	Kirkland_Manholes-3060	360.51	136.8	0.91	8	PVC	0.01	674	0	12	12	1.8		
Kirkland_Main-671	Kirkland_Manholes-3059	374.97	Kirkland_Manholes-3060	371.3	316.1	1.16	8	PVC	0.01	760	0	4	4	0.6		Drop Connection
Kirkland_Main-672	Kirkland_Manholes-3060	360.51	Kirkland_Manholes-3064	358.68	232.8	0.79	8	PVC	0.01	625	2	20	22	3.5		
Kirkland_Main-673	Kirkland_Manholes-3064	358.68	Kirkland_Manholes-3065	358.3	94.6	0.4	8	PVC	0.01	446	2	24	26	5.8		
Kirkland_Main-674	Kirkland_Manholes-3065	358.3	Kirkland_Manholes-3066	356.12	87.4	2.49	8	PVC	0.01	1,113	3	28	31	2.8		
Kirkland_Main-675	Kirkland_Manholes-3066	356.12	Kirkland_Manholes-3067	344.94	288.6	3.87	8	PVC	0.01	1,388	5	32	37	2.7		
Kirkland_Main-676	Kirkland_Manholes-3067	344.94	Kirkland_Manholes-3068	332.11	210.6	6.09	8	PVC	0.01	1,740	5	36	41	2.4		
Kirkland_Main-677	Kirkland_Manholes-3068	332.11	Kirkland_Manholes-3069	304.52	266.1	10.37	8	PVC	0.01	2,270	6	40	45	2		
Kirkland_Main-678	Kirkland_Manholes-3069	304.52	Kirkland_Manholes-926	302.74	43.6	4.09	8	PVC	0.01	1,425	6	44	50	3.5		
Kirkland_Main-679	Kirkland_Manholes-299	66.63	Kirkland_Manholes-298	56.65	96.2	10.37	8	PVC	0.01	2,271	9	16	25	1.1	SM10	
Kirkland_Main-680	Kirkland_Manholes-298	56.65	Kirkland_Manholes-289	31.71	154.4	16.15	8	PVC	0.01	2,834	9	19	28	1	SM10	
Kirkland_Main-681	Kirkland_Manholes-281	36.84	Kirkland_Manholes-280	27.37	236.3	4.01	8	PVC	0.01	1,411	1	13	14	1	SM10	
Kirkland_Main-682	Kirkland_Manholes-752	265.45	Kirkland_Manholes-1559	253.89	158.5	7.29	8	PVC	0.01	1,904	20	60	80	4.2	SM14-Ex-EX68	
Kirkland_Main-683	Kirkland_Manholes-1561	229.17	Kirkland_Manholes-1562	206.57	130	17.39	8	PVC	0.01	2,940	1	4	5	0.2		

Existing with Proposed Improvements - Peak Hour Flow - Pipe Capacity Table

Label	Upstream Node	Upstream Invert Elevation (ft)	Downstream Node	Downstream Invert Elevation (ft)	Length (ft)	Slope (%)	Diameter (in)	Material	Manning's n	Design Capacity (gpm)	Domestic Flow (gpm)	I/I Flow (gpm)	Total Flow (gpm)	Percent Full (%)	CIP No.	Notes
Kirkland_Main-684	Kirkland_Manholes-1563	203.28	Kirkland_Manholes-1564	164.37	189.8	20.5	8	PVC	0.01	3,192	1	12	13	0.4		
Kirkland_Main-685	Kirkland_Manholes-1347	427.05	Kirkland_Manholes-1349	426.8	216.3	0.12	8	PVC	0.01	240	2	16	18	7.6		
Kirkland_Main-686	Kirkland_Manholes-1349	426.8	Kirkland_Manholes-1348	423.36	47.3	7.28	8	PVC	0.01	1,902	3	20	23	1.2		
Kirkland_Main-687	Kirkland_Manholes-1348	423.36	Kirkland_Manholes-1354	421.4	318.8	0.61	8	PVC	0.01	553	3	24	27	4.9		
Kirkland_Main-688	Kirkland_Manholes-1352	406.36	Kirkland_Manholes-1903	399.77	227.2	2.9	8	PVC	0.01	1,201	1	4	5	0.4		
Kirkland_Main-689	Kirkland_Manholes-1353	422.52	Kirkland_Manholes-1354	421.4	133.4	0.84	8	PVC	0.01	646	2	4	6	0.9		
Kirkland_Main-690	Kirkland_Manholes-1354	421.4	Kirkland_Manholes-1355	420.81	87.2	0.68	8	PVC	0.01	580	5	32	37	6.4		
Kirkland_Main-691	Kirkland_Manholes-832	339.26	Kirkland_Manholes-794	336.64	92.4	2.84	8	PVC	0.01	1,188	2	12	14	1.2		
Kirkland_Main-692	Kirkland_Manholes-794	336.64	Kirkland_Manholes-795	330.76	102.1	5.76	8	PVC	0.01	1,692	3	16	19	1.1		
Kirkland_Main-693	Kirkland_Manholes-795	330.76	Kirkland_Manholes-796	329.52	188.4	0.66	8	PVC	0.01	572	4	20	23	4.1		
Kirkland_Main-694	Kirkland_Manholes-833	205	Kirkland_Manholes-830	198.45	115.6	5.67	8	PVC	0.01	1,678	1	4	5	0.3		
Kirkland_Main-695	Kirkland_Manholes-1212	307.51	Kirkland_Manholes-1213	300.54	162.4	4.29	6	Concrete	0.013	522	60	20	79	15.2		
Kirkland_Main-696	Kirkland_Manholes-1213	300.54	Kirkland_Manholes-2616	274.02	226.7	11.7	6	Concrete	0.013	861	60	24	83	9.7		
Kirkland_Main-697	Kirkland_Manholes-515	18.45	Kirkland_Manholes-514	18.19	122.3	0.21	12	PVC	0.01	953	30	203	233	24.5	SM14-Ex-EX37	
Kirkland_Main-698	Kirkland_Manholes-1186	18.89	Kirkland_Manholes-515	18.45	232.7	0.19	12	PVC	0.01	907	30	195	224	24.7	SM14-Ex-EX37	
Kirkland_Main-699	Kirkland_Manholes-1185	19.29	Kirkland_Manholes-1186	18.89	267.9	0.15	12	PVC	0.01	803	29	186	214	26.7	SM14-Ex-EX37	
Kirkland_Main-700	Kirkland_Manholes-2510	102.3	Kirkland_Manholes-2511	85.9	155.2	10.57	8	PVC	0.01	2,292	6	24	30	1.3	SM14-Ex-EX229	
Kirkland_Main-701	Kirkland_Manholes-2512	90.74	Kirkland_Manholes-2511	85.9	110.5	4.38	8	PVC	0.01	1,475	2	12	14	1	SM14-Ex-EX228	
Kirkland_Main-703	Kirkland_Manholes-2513	104.61	Kirkland_Manholes-2512	90.74	161.7	8.58	8	PVC	0.01	2,065	2	6	8	0.4	SM14-Ex-EX228	
Kirkland_Main-704	Kirkland_Manholes-1988	449.74	Kirkland_Manholes-1989	447.97	257	0.69	8	PVC	0.01	585	1	4	5	0.9		
Kirkland_Main-705	Kirkland_Manholes-2008	435.7	Kirkland_Manholes-1993	435.41	162.8	0.18	8	PVC	0.01	298	5	16	21	7		
Kirkland_Main-706	Kirkland_Manholes-2060	437.6	Kirkland_Manholes-2008	435.7	259.6	0.73	8	PVC	0.01	603	2	4	6	1.1		
Kirkland_Main-707	Kirkland_Manholes-1993	435.41	Kirkland_Manholes-2061	434.9	121.2	0.42	8	PVC	0.01	457	5	20	25	5.5		
Kirkland_Main-708	Kirkland_Manholes-2061	434.9	Kirkland_Manholes-1994	434.42	35	1.37	8	PVC	0.01	826	6	24	29	3.6		
Kirkland_Main-709	Kirkland_Manholes-1994	434.42	Kirkland_Manholes-1995	433.71	121.9	0.58	8	PVC	0.01	538	6	28	34	6.2		
Kirkland_Main-710	Kirkland_Manholes-1995	433.71	Kirkland_Manholes-1996	432.86	110.9	0.77	8	PVC	0.01	617	7	36	43	7		
Kirkland_Main-711	Kirkland_Manholes-1996	432.86	Kirkland_Manholes-1997	432.14	299.5	0.24	8	PVC	0.01	346	8	40	47	13.7		
Kirkland_Main-712	Kirkland_Manholes-1998	432.54	Kirkland_Manholes-1997	432.14	196.8	0.2	8	PVC	0.01	318	1	4	5	1.6	SM14-Ex-EX211	
Kirkland_Main-713	Kirkland_Manholes-1997	432.14	Kirkland_Manholes-1999	430.91	331.2	0.37	8	PVC	0.01	430	11	48	58	13.6	SM14-Ex-EX211	
Kirkland_Main-714	Kirkland_Manholes-2062	435.63	Kirkland_Manholes-1995	433.71	265.8	0.72	8	PVC	0.01	599	1	4	5	0.9		
Kirkland_Main-717	Kirkland_Manholes-2063	422.68	Kirkland_Manholes-2671	399.75	265	8.65	8	PVC	0.01	2,074	12	72	84	4	SM14-Ex-EX209	
Kirkland_Main-718	Kirkland_Manholes-2066	434.49	Kirkland_Manholes-2059	433	119.7	1.24	8	PVC	0.01	787	0	4	4	0.6	SM14-Ex-EX213	
Kirkland_Main-719	Kirkland_Manholes-2698	186.34	Kirkland_Manholes-2068	163.08	368.4	6.31	8	PVC	0.01	1,772	13	60	73	4.1	SM14-Ex-EX198	
Kirkland_Main-720	Kirkland_Manholes-2073	208.76	Kirkland_Manholes-2072	202.36	249.4	2.57	8	PVC	0.01	1,129	2	4	6	0.5	SM14-Ex-EX200	
Kirkland_Main-721	Kirkland_Manholes-2072	202.36	Kirkland_Manholes-2071	194.98	377.1	1.96	8	PVC	0.01	986	5	8	13	1.3	SM14-Ex-EX200	
Kirkland_Main-722	Kirkland_Manholes-2071	194.98	Kirkland_Manholes-2070	185.96	391.2	2.31	8	PVC	0.01	1,071	8	12	20	1.9	SM14-Ex-EX200	
Kirkland_Main-723	Kirkland_Manholes-2070	185.96	Kirkland_Manholes-2069	170.43	333.6	4.65	8	PVC	0.01	1,521	11	20	31	2	SM14-Ex-EX200	
Kirkland_Main-724	Kirkland_Manholes-2082	247.37	Kirkland_Manholes-2083	246.89	120.8	0.4	8	PVC	0.01	447	0	4	4	0.9		
Kirkland_Main-725	Kirkland_Manholes-2083	246.89	Kirkland_Manholes-658	246.8	21.8	0.4	8	PVC	0.01	446	1	8	8	1.9		
Kirkland_Main-727	Kirkland_Manholes-2077	125.7	Kirkland_Manholes-2078	109.29	215.7	7.61	8	PVC	0.01	1,945	3	25	28	1.4	SM14-Ex-EX195	
Kirkland_Main-728	Kirkland_Manholes-2076	138.89	Kirkland_Manholes-2077	125.7	187.9	7.02	8	PVC	0.01	1,868	2	16	18	1	SM14-Ex-EX195	
Kirkland_Main-729	Kirkland_Manholes-2075	153.92	Kirkland_Manholes-2076	138.89	219.4	6.85	8	PVC	0.01	1,845	1	8	9	0.5	SM14-Ex-EX195	
Kirkland_Main-731	Kirkland_Manholes-574	110.98	Kirkland_Manholes-595	103.44	159.1	4.74	8	PVC	0.01	1,535	3	16	19	1.3	SM14-Ex-EX116	
Kirkland_Main-736	Kirkland_Manholes-1656	125.68	Kirkland_Manholes-1655	123.15	42	6.03	8	PVC	0.01	1,731	8	8	16	0.9		
Kirkland_Main-737	Kirkland_Manholes-1655	123.15	Kirkland_Manholes-1657	121.13	91.5	2.21	8	PVC	0.01	1,048	8	16	24	2.3		
Kirkland_Main-738	Kirkland_Manholes-1658	125.68	Kirkland_Manholes-1657	125.55	31.5	0.4	8	PVC	0.01	446	2	8	11	2.4		Drop Connection
Kirkland_Main-739	Kirkland_Manholes-1657	121.13	Kirkland_Manholes-1659	116.52	191.7	2.41	8	PVC	0.01	1,093	10	33	43	3.9		
Kirkland_Main-740	Kirkland_Manholes-1659	116.52	Kirkland_Manholes-1660	110.77	122.6	4.69	8	PVC	0.01	1,527	26	41	67	4.4		
Kirkland_Main-741	Kirkland_Manholes-1660	110.77	Kirkland_Manholes-1662	100.46	127.6	8.08	8	PVC	0.01	2,004	26	49	75	3.8		
Kirkland_Main-742	Kirkland_Manholes-1663	103.65	Kirkland_Manholes-1661	102.19	55.6	2.62	8	PVC	0.01	1,142	2	16	18	1.6		
Kirkland_Main-743	Kirkland_Manholes-1661	102.19	Kirkland_Manholes-1662	100.46	11.1	15.62	8	PVC	0.01	2,786	2	25	27	1		
Kirkland_Main-744	Kirkland_Manholes-1662	100.46	Kirkland_Manholes-1665	94.21	177.6	3.52	8	PVC	0.01	1,322	28	82	110	8.3		
Kirkland_Main-745	Kirkland_Manholes-1664	108.5	Kirkland_Manholes-1663	103.65	57.4	8.45	8	PVC	0.01	2,049	2	8	10	0.5	SM14-Ex-EX169	
Kirkland_Main-746	Kirkland_Manholes-1667	101.23	Kirkland_Manholes-1666	89.71	215.8	5.34	8	PVC	0.01	1,629	13	41	54	3.3		
Kirkland_Main-747	Kirkland_Manholes-1668	119.52	Kirkland_Manholes-1667	101.23	220.6	8.29	8	PVC	0.01	2,030	8	25	33	1.6		
Kirkland_Main-748	Kirkland_Manholes-1295	119.7	Kirkland_Manholes-572	113.73	319.3	1.87	8	PVC	0.01	964	79	321	400	41.5	SM14-Ex-EX117	
Kirkland_Main-749	Kirkland_Manholes-1256	151.53	Kirkland_Manholes-1284	145.84	256.4	2.22	8	PVC	0.01	1,050	18	115	134	12.7	SM14-Ex-EX108	
Kirkland_Main-750	Kirkland_Manholes-1283	147.65	Kirkland_Manholes-1284	145.84	53.9	3.36	8	PVC	0.01	1,292	4	16	20	1.6	SM14-Ex-EX108	
Kirkland_Main-751	Kirkland_Manholes-1282	154.9	Kirkland_Manholes-1283	147.65	295.8	2.45	8	PVC	0.01	1,104	2	8	10	0.9	SM14-Ex-EX108	
Kirkland_Main-753	Kirkland_Manholes-1284	145.84	Kirkland_Manholes-1287	140.18	314.1	1.8	8	PVC	0.01	946	24	140	164	17.3	SM14-Ex-EX105	
Kirkland_Main-755	Kirkland_Manholes-1285	150.78	Kirkland_Manholes-1286	147.03	125.8	2.98	8	PVC	0.01	1,217	1	8	9	0.8	SM14-Ex-EX109	
Kirkland_Main-756	Kirkland_Manholes-1286	147.03	Kirkland_Manholes-1287	140.18	192.2	3.56	8	PVC	0.01	1,331	3	16	20	1.5	SM14-Ex-EX109	

Existing with Proposed Improvements - Peak Hour Flow - Pipe Capacity Table

Label	Upstream Node	Upstream Invert Elevation (ft)	Downstream Node	Downstream Invert Elevation (ft)	Length (ft)	Slope (%)	Diameter (in)	Material	Manning's n	Design Capacity (gpm)	Domestic Flow (gpm)	I/I Flow (gpm)	Total Flow (gpm)	Percent Full (%)	CIP No.	Notes
Kirkland_Main-757	Kirkland_Manholes-1289	131.61	Kirkland_Manholes-1290	127.52	235.4	1.74	8	PVC	0.01	929	35	181	216	23.2	SM14-Ex-EX105	
Kirkland_Main-758	Kirkland_Manholes-1290	127.52	Kirkland_Manholes-576	111.2	318.6	5.12	8	PVC	0.01	1,596	46	255	301	18.9	SM14-Ex-EX105	
Kirkland_Main-759	Kirkland_Manholes-1291	137.27	Kirkland_Manholes-1290	127.52	280.9	3.47	8	PVC	0.01	1,314	10	66	76	5.8	SM14-Ex-EX111	
Kirkland_Main-760	Kirkland_Manholes-1261	144.57	Kirkland_Manholes-1291	137.27	276	2.64	8	PVC	0.01	1,147	8	58	65	5.7	SM14-Ex-EX111	
Kirkland_Main-761	Kirkland_Manholes-1227	174.57	Kirkland_Manholes-584	159.38	158.7	9.57	8	PVC	0.01	2,181	25	91	116	5.3	SM14-Ex-EX96	
Kirkland_Main-762	Kirkland_Manholes-1238	263.26	Kirkland_Manholes-1298	253.38	261	3.78	8	PVC	0.01	1,372	3	16	20	1.4	SM14-Ex-EX64	
Kirkland_Main-763	Kirkland_Manholes-1298	253.38	Kirkland_Manholes-1245	243.41	258.4	3.86	8	PVC	0.01	1,385	6	25	31	2.2	SM14-Ex-EX64	
Kirkland_Main-765	Kirkland_Manholes-1302	252.61	Kirkland_Manholes-1301	241.1	158.8	7.25	8	PVC	0.01	1,898	2	8	10	0.5	SM14-Ex-EX98	
Kirkland_Main-766	Kirkland_Manholes-1230	236.32	Kirkland_Manholes-1229	218.73	349.5	5.03	8	PVC	0.01	1,582	17	58	74	4.7	SM14-Ex-EX96	
Kirkland_Main-767	Kirkland_Manholes-1229	218.73	Kirkland_Manholes-1228	189.87	369	7.82	8	PVC	0.01	1,972	20	66	86	4.4	SM14-Ex-EX96	
Kirkland_Main-768	Kirkland_Manholes-727	84.25	Kirkland_Manholes-728	70.86	152.9	8.76	8	PVC	0.01	2,086	112	535	648	31	SM14-Ex-EX117	
Kirkland_Main-769	Kirkland_Manholes-1407	474.89	Kirkland_Manholes-1406	473.57	319.1	0.41	8	PVC	0.01	453	25	28	53	11.7		
Kirkland_Main-770	Kirkland_Manholes-1415	475.19	Kirkland_Manholes-1406	473.57	245.1	0.66	8	PVC	0.01	573	30	44	73	12.8		
Kirkland_Main-771	Kirkland_Manholes-1408	476.13	Kirkland_Manholes-1407	474.89	287.1	0.43	8	PVC	0.01	463	4	24	27	5.9		
Kirkland_Main-772	Kirkland_Manholes-1409	479.33	Kirkland_Manholes-1408	476.13	271.9	1.18	8	PVC	0.01	765	4	20	23	3.1		
Kirkland_Main-773	Kirkland_Manholes-1410	479.58	Kirkland_Manholes-1409	479.33	219	0.11	8	PVC	0.01	238	3	16	19	8.1		
Kirkland_Main-774	Kirkland_Manholes-1411	480.36	Kirkland_Manholes-1410	479.58	194.5	0.4	8	PVC	0.01	445	3	12	15	3.4		
Kirkland_Main-775	Kirkland_Manholes-1412	483.98	Kirkland_Manholes-1411	480.36	100.6	3.6	8	PVC	0.01	1,338	3	4	7	0.5		
Kirkland_Main-776	Kirkland_Manholes-1853	276.11	Kirkland_Manholes-1851	275	191.4	0.58	8	PVC	0.01	537	1	4	5	0.9		
Kirkland_Main-777	Kirkland_Manholes-1772	68.31	Kirkland_Manholes-2929	66.75	69.5	2.25	12	PVC	0.01	3,115	118	478	596	19.1	SM14-Ex-EX166	
Kirkland_Main-778	Kirkland_Manholes-2929	66.75	Kirkland_Manholes-729	64.46	261.6	0.88	12	PVC	0.01	1,946	118	486	604	31	SM14-Ex-EX166	
Kirkland_Main-780	Kirkland_Manholes-1413	481	Kirkland_Manholes-1411	480.36	161.4	0.4	8	PVC	0.01	446	0	4	4	1		
Kirkland_Main-781	Kirkland_Manholes-1418	477.42	Kirkland_Manholes-1414	476.69	182.7	0.4	8	PVC	0.01	446	1	16	16	3.7		
Kirkland_Main-782	Kirkland_Manholes-2078	109.29	Kirkland_Manholes-2079	101.7	225.4	3.37	8	PVC	0.01	1,294	4	33	36	2.8	SM14-Ex-EX195	
Kirkland_Main-783	Kirkland_Manholes-2079	101.7	Kirkland_Manholes-2080	100.3	24.2	5.79	8	PVC	0.01	1,697	5	41	46	2.7		
Kirkland_Main-784	Kirkland_Manholes-2129	162.62	Kirkland_Manholes-2130	161.57	13	8.1	12	PVC	0.01	5,916	0	8	8	0.1	SM14-Ex-EX235	
Kirkland_Main-785	Kirkland_Manholes-2128	162.8	Kirkland_Manholes-2129	162.62	31	0.58	12	PVC	0.01	1,584	0	4	4	0.3		
Kirkland_Main-786	Kirkland_Manholes-2127	166.38	Kirkland_Manholes-2130	161.57	81	5.94	8	PVC	0.01	1,718	20	8	28	1.6	SM14-Ex-EX235	
Kirkland_Main-787	Kirkland_Manholes-2131	158.3	O-32	156.08	22.1	10.06	15	PVC	0.01	11,953	571	1,514	2,085	17.4	SM14-Ex-EX236	
Kirkland_Main-788	Kirkland_Manholes-2139	96.6	Kirkland_Manholes-2138	94.8	32.5	5.54	8	PVC	0.01	1,659	5	25	29	1.8		
Kirkland_Main-789	Kirkland_Manholes-2154	28.66	Kirkland_Manholes-2153	28.2	11.2	4.1	8	PVC	0.01	1,428	3	39	42	2.9	SM14-Ex-EX220	
Kirkland_Main-790	Kirkland_Manholes-2153	28.2	Kirkland_Manholes-2152	27.32	8.5	10.4	8	PVC	0.01	2,274	3	45	49	2.1	SM14-Ex-EX220	
Kirkland_Main-791	Kirkland_Manholes-2152	27.32	Kirkland_Manholes-2320	18	38.7	24.05	8	PVC	0.01	3,458	3	52	55	1.6		
Kirkland_Main-792	Kirkland_Manholes-2151	49.81	Kirkland_Manholes-2154	28.66	303.9	6.96	8	PVC	0.01	1,860	3	32	36	1.9	SM14-Ex-EX220	
Kirkland_Main-793	Kirkland_Manholes-2150	50.98	Kirkland_Manholes-2151	49.81	135.2	0.87	8	PVC	0.01	656	2	26	28	4.2	SM14-Ex-EX220	
Kirkland_Main-794	Kirkland_Manholes-2149	76.26	Kirkland_Manholes-2150	50.98	227.7	11.1	8	PVC	0.01	2,349	1	19	20	0.9	SM14-Ex-EX220	
Kirkland_Main-795	Kirkland_Manholes-2148	77.03	Kirkland_Manholes-2149	76.26	100.5	0.77	8	PVC	0.01	617	0	13	13	2.1	SM14-Ex-EX220	
Kirkland_Main-796	Kirkland_Manholes-2147	92.38	Kirkland_Manholes-2148	77.03	204.1	7.52	8	PVC	0.01	1,934	0	6	6	0.3	SM14-Ex-EX220	
Kirkland_Main-800	Kirkland_Manholes-2158	102.11	Kirkland_Manholes-2157	100.18	271.7	0.71	8	PVC	0.01	594	2	6	9	1.5		
Kirkland_Main-801	Kirkland_Manholes-2160	86.23	Kirkland_Manholes-2159	84.71	220.9	0.69	8	PVC	0.01	585	1	6	8	1.3		
Kirkland_Main-802	Kirkland_Manholes-2157	100.18	Kirkland_Manholes-2159	84.71	251.5	6.15	8	PVC	0.01	1,749	14	52	66	3.8		
Kirkland_Main-804	Kirkland_Manholes-2134	124.65	Kirkland_Manholes-2135	110	281.7	5.2	8	PVC	0.01	1,608	5	26	31	1.9	SM14-Ex-EX221	
Kirkland_Main-805	Kirkland_Manholes-2133	139	Kirkland_Manholes-2134	124.65	362.7	3.96	8	PVC	0.01	1,402	3	19	22	1.6	SM14-Ex-EX221	
Kirkland_Main-806	Kirkland_Manholes-2132	159.52	Kirkland_Manholes-2131	158.3	73.8	1.65	15	PVC	0.01	4,846	567	1,510	2,077	42.8	SM14-Ex-EX236	
Kirkland_Main-807	Kirkland_Manholes-2126	177.6	Kirkland_Manholes-2127	166.38	202.1	5.55	8	PVC	0.01	1,661	20	4	24	1.4	SM14-Ex-EX235	
Kirkland_Main-808	Kirkland_Manholes-2125	177.39	Kirkland_Manholes-2132	159.52	237.1	7.54	12	PVC	0.01	5,707	551	1,482	2,033	35.6		
Kirkland_Main-809	Kirkland_Manholes-2304	192.91	Kirkland_Manholes-2125	177.39	277.3	5.6	12	PVC	0.01	4,918	551	1,478	2,029	41.3		
Kirkland_Main-810	Kirkland_Manholes-2136	110.1	Kirkland_Manholes-2137	107.9	254.4	0.86	10	PVC	0.01	1,189	1	8	9	0.8		
Kirkland_Main-811	Kirkland_Manholes-2137	107.9	Kirkland_Manholes-2080	100.3	293.2	2.59	10	PVC	0.01	2,058	6	16	22	1.1		
Kirkland_Main-812	Kirkland_Manholes-2080	100.3	Kirkland_Manholes-2138	94.8	252.5	2.18	10	PVC	0.01	1,887	11	66	76	4		
Kirkland_Main-813	Kirkland_Manholes-2138	94.8	Kirkland_Manholes-2140	88.47	239.3	2.65	10	PVC	0.01	2,079	15	99	114	5.5		
Kirkland_Main-814	Kirkland_Manholes-2140	88.47	Kirkland_Manholes-2141	73.53	356.2	4.19	10	PVC	0.01	2,618	24	165	188	7.2		
Kirkland_Main-815	Kirkland_Manholes-2141	73.53	Kirkland_Manholes-2142	68.99	196.1	2.31	10	PVC	0.01	1,945	48	214	262	13.5		
Kirkland_Main-816	Kirkland_Manholes-2142	68.99	Kirkland_Manholes-2143	61.9	284.3	2.49	10	PVC	0.01	2,019	54	288	342	17		
Kirkland_Main-817	Kirkland_Manholes-2876	267.92	Kirkland_Manholes-2877	259.41	173	4.92	8	PVC	0.01	1,564	4	20	24	1.5		
Kirkland_Main-818	Kirkland_Manholes-2877	259.41	Kirkland_Manholes-625	258	37.7	3.74	8	PVC	0.01	1,364	5	24	28	2.1		
Kirkland_Main-819	Kirkland_Manholes-2878	269.8	Kirkland_Manholes-2876	267.92	58	3.24	8	PVC	0.01	1,269	2	8	10	0.8		
Kirkland_Main-820	Kirkland_Manholes-2882	274.26	Kirkland_Manholes-2878	269.8	141	3.16	8	PVC	0.01	1,254	1	4	5	0.4		
Kirkland_Main-821	Kirkland_Manholes-1801	112.29	Kirkland_Manholes-1802	95.68	270.4	6.14	8	PVC	0.01	1,747	58	253	311	17.8	SM4	
Kirkland_Main-822	Kirkland_Manholes-1803	87.57	Kirkland_Manholes-1401	76.78	133.9	8.06	8	PVC	0.01	2,002	1	8	9	0.5	SM14-Ex-EX141	
Kirkland_Main-823	Kirkland_Manholes-1804	103.12	Kirkland_Manholes-1403	89.74	129.7	10.32	8	PVC	0.01	2,265	1	8	9	0.4	SM14-Ex-EX140	
Kirkland_Main-826	Kirkland_Manholes-1807	44.26	Kirkland_Manholes-1806	38.89	57.7	9.3	8	PVC	0.01	2,150	84	303	386	18	SM4	

Existing with Proposed Improvements - Peak Hour Flow - Pipe Capacity Table

Label	Upstream Node	Upstream Invert Elevation (ft)	Downstream Node	Downstream Invert Elevation (ft)	Length (ft)	Slope (%)	Diameter (in)	Material	Manning's n	Design Capacity (gpm)	Domestic Flow (gpm)	I/I Flow (gpm)	Total Flow (gpm)	Percent Full (%)	CIP No.	Notes
Kirkland_Main-827	Kirkland_Manholes-589	126.06	Kirkland_Manholes-590	118.3	332.1	2.34	8	PVC	0.01	1,078	3	8	11	1	SM14-Ex-EX158	
Kirkland_Main-828	Kirkland_Manholes-1802	95.68	Kirkland_Manholes-1810	85.96	289.7	3.35	8	PVC	0.01	1,291	64	278	342	26.5	SM4	
Kirkland_Main-829	Kirkland_Manholes-1833	16.5	Kirkland_Manholes-1793	15.37	141.1	0.8	8	PVC	0.01	631	2	13	15	2.4		
Kirkland_Main-830	Kirkland_Manholes-1836	11	Kirkland_Manholes-1791	8.2	291.3	0.96	15	PVC	0.01	3,695	390	890	1,279	34.6		
Kirkland_Main-832	Kirkland_Manholes-1850	19.39	Kirkland_Manholes-1849	16.69	373.2	0.72	8	PVC	0.01	600	4	13	17	2.9	SM10	
Kirkland_Main-833	Kirkland_Manholes-1849	16.69	Kirkland_Manholes-1847	16.59	254.1	0.04	8	PVC	0.01	140	5	19	24	17.5	SM10	
Kirkland_Main-834	Kirkland_Manholes-1847	16.59	Kirkland_Manholes-1846	15.1	93.2	1.6	12	PVC	0.01	2,628	5	26	31	1.2	SM10	
Kirkland_Main-835	Kirkland_Manholes-2633	278.44	Kirkland_Manholes-2632	276.84	129.7	1.23	8	PVC	0.01	783	3	8	11	1.4	SM14-Ex-EX295	
Kirkland_Main-837	Kirkland_Manholes-2605	280.73	Kirkland_Manholes-2633	278.44	217.9	1.05	8	PVC	0.01	723	2	4	6	0.8	SM14-Ex-EX295	
Kirkland_Main-838	Kirkland_Manholes-2634	286.56	Kirkland_Manholes-2635	275.48	268.8	4.12	8	PVC	0.01	1,431	3	4	7	0.5	SM14-Ex-EX294	
Kirkland_Main-839	Kirkland_Manholes-2635	275.48	Kirkland_Manholes-2636	245.46	401.2	7.48	8	PVC	0.01	1,929	5	12	17	0.9	SM14-Ex-EX294	
Kirkland_Main-840	Kirkland_Manholes-2636	245.46	Kirkland_Manholes-2637	187.87	397.8	14.48	8	PVC	0.01	2,683	6	16	22	0.8	SM14-Ex-EX294	
Kirkland_Main-841	Kirkland_Manholes-2640	93.15	Kirkland_Manholes-2641	88.89	86.7	4.91	8	PVC	0.01	1,563	5	18	23	1.5		
Kirkland_Main-842	Kirkland_Manholes-2639	115.66	Kirkland_Manholes-2640	93.15	98.6	22.84	8	PVC	0.01	3,369	4	12	16	0.5		
Kirkland_Main-843	Kirkland_Manholes-2638	117.25	Kirkland_Manholes-2639	115.66	47.5	3.35	8	PVC	0.01	1,290	2	6	8	0.6		
Kirkland_Main-844	Kirkland_Manholes-2643	117.26	Kirkland_Manholes-2642	102.55	182.7	8.05	8	PVC	0.01	2,001	1	6	7	0.4		
Kirkland_Main-848	Kirkland_Manholes-2645	79.04	Kirkland_Manholes-2644	74.88	115.7	3.59	8	PVC	0.01	1,337	7	36	44	3.3		
Kirkland_Main-850	Kirkland_Manholes-1481	462.54	Kirkland_Manholes-1482	457.77	84.3	5.66	8	PVC	0.01	1,677	4	20	24	1.4	SM14-Ex-EX268	
Kirkland_Main-851	Kirkland_Manholes-1495	496.81	Kirkland_Manholes-1484	495.36	362.4	0.4	8	PVC	0.01	446	1	4	5	1.1		
Kirkland_Main-852	Kirkland_Manholes-1484	495.36	Kirkland_Manholes-1485	486.98	151.8	5.52	8	PVC	0.01	1,657	4	32	36	2.2		
Kirkland_Main-853	Kirkland_Manholes-1485	486.98	Kirkland_Manholes-1486	483.92	112.4	2.72	8	PVC	0.01	1,163	11	48	59	5.1		
Kirkland_Main-854	Kirkland_Manholes-1486	483.92	Kirkland_Manholes-1488	482.18	104.3	1.67	8	PVC	0.01	910	13	52	65	7.1		
Kirkland_Main-855	Kirkland_Manholes-1488	482.18	Kirkland_Manholes-1489	480.6	353.4	0.45	8	PVC	0.01	471	16	60	76	16.1		
Kirkland_Main-856	Kirkland_Manholes-1487	483.25	Kirkland_Manholes-1488	482.18	163.9	0.65	8	PVC	0.01	570	2	4	6	1		
Kirkland_Main-857	Kirkland_Manholes-1489	480.6	Kirkland_Manholes-2029	479.06	117.8	1.31	8	PVC	0.01	806	18	64	81	10.1		
Kirkland_Main-858	Kirkland_Manholes-1490	499.13	Kirkland_Manholes-1492	491.87	290.5	2.5	8	PVC	0.01	1,115	2	4	6	0.6		
Kirkland_Main-859	Kirkland_Manholes-1492	491.87	Kirkland_Manholes-1491	489.53	101	2.32	8	PVC	0.01	1,073	4	8	12	1.1		
Kirkland_Main-860	Kirkland_Manholes-1491	489.53	Kirkland_Manholes-1485	486.98	404.5	0.63	8	PVC	0.01	560	6	12	17	3.1		
Kirkland_Main-861	Kirkland_Manholes-1493	479.91	Kirkland_Manholes-2025	477	402.9	0.72	8	PVC	0.01	599	6	8	13	2.2		
Kirkland_Main-862	Kirkland_Manholes-1494	496.1	Kirkland_Manholes-1484	495.36	68.3	1.08	8	PVC	0.01	734	3	24	27	3.7		
Kirkland_Main-865	Kirkland_Manholes-2234	145.49	Kirkland_Manholes-2235	140.92	280.9	1.63	8	PVC	0.01	899	3	6	9	1	SM14-Ex-EX221	
Kirkland_Main-866	Kirkland_Manholes-2235	140.92	Kirkland_Manholes-2133	139	112.7	1.7	8	PVC	0.01	920	3	13	16	1.7	SM14-Ex-EX221	
Kirkland_Main-867	Kirkland_Manholes-2236	23.9	Kirkland_Manholes-2230	23.3	57.5	1.04	8	PVC	0.01	720	0	6	6	0.9		
Kirkland_Main-868	Kirkland_Manholes-2702	256.62	Kirkland_Manholes-1633	254.8	313.1	0.58	8	PVC	0.01	538	6	12	17	3.2	SM14-Ex-EX204	
Kirkland_Main-869	Kirkland_Manholes-1634	223.49	Kirkland_Manholes-1635	192.35	312.2	9.97	8	PVC	0.01	2,227	216	842	1,059	47.5	SM7	
Kirkland_Main-870	Kirkland_Manholes-1635	192.35	Kirkland_Manholes-1638	164.94	265.5	10.33	8	PVC	0.01	2,266	218	846	1,065	47	SM7	
Kirkland_Main-871	Kirkland_Manholes-1636	172.84	Kirkland_Manholes-1637	170.82	135.8	1.49	8	PVC	0.01	860	1	4	5	0.6		
Kirkland_Main-872	Kirkland_Manholes-1637	170.82	Kirkland_Manholes-1639	169.94	172.1	0.51	8	PVC	0.01	504	2	8	10	1.9		
Kirkland_Main-873	Kirkland_Manholes-1639	169.94	Kirkland_Manholes-1638	164.94	235.7	2.12	8	PVC	0.01	1,027	16	95	111	10.8	SM14-Ex-EX202	
Kirkland_Main-874	Kirkland_Manholes-1638	164.94	Kirkland_Manholes-1642	158.76	65.1	9.49	8	PVC	0.01	2,172	234	946	1,180	54.3	SM7	
Kirkland_Main-875	Kirkland_Manholes-1641	205.91	Kirkland_Manholes-1640	188.59	221.5	7.82	8	PVC	0.01	1,971	2	4	6	0.3	SM14-Ex-EX203	
Kirkland_Main-877	Kirkland_Manholes-1643	156.25	Kirkland_Manholes-1648	152.03	150	2.81	8	PVC	0.01	1,183	1	8	9	0.8	SM14-Ex-EX196	
Kirkland_Main-878	Kirkland_Manholes-1644	159.14	O-25	154.59	17.5	26	8	PVC	0.01	3,595	17	56	72	2		
Kirkland_Main-879	Kirkland_Manholes-1645	171.46	Kirkland_Manholes-1644	159.14	257.8	4.78	8	PVC	0.01	1,541	16	52	68	4.4		
Kirkland_Main-880	Kirkland_Manholes-1625	179.1	Kirkland_Manholes-1645	171.46	179.3	4.26	8	PVC	0.01	1,455	10	48	58	4		
Kirkland_Main-881	Kirkland_Manholes-1647	165.32	O-24	163.59	78.9	2.18	8	PVC	0.01	1,042	0	4	4	0.4	SM14-Ex-EX175	
Kirkland_Main-882	Kirkland_Manholes-1676	98.96	Kirkland_Manholes-1677	88.12	84.8	12.79	8	PVC	0.01	2,521	21	33	54	2.1		
Kirkland_Main-883	Kirkland_Manholes-1678	99.76	Kirkland_Manholes-1676	98.96	128.1	0.62	8	PVC	0.01	557	18	16	34	6.1		
Kirkland_Main-884	Kirkland_Manholes-1679	107.21	Kirkland_Manholes-1678	99.76	181.8	4.1	8	PVC	0.01	1,427	18	8	26	1.8		
Kirkland_Main-885	Kirkland_Manholes-1683	75.33	Kirkland_Manholes-1682	74.03	148.9	0.87	8	PVC	0.01	659	3	16	19	2.9		
Kirkland_Main-886	Kirkland_Manholes-1682	74.03	Kirkland_Manholes-1681	72.36	31.7	5.27	8	PVC	0.01	1,619	3	25	27	1.7		
Kirkland_Main-887	Kirkland_Manholes-602	90.22	Kirkland_Manholes-1680	83.64	138.4	4.75	8	PVC	0.01	1,537	84	399	483	31.4	SM5	
Kirkland_Main-888	Kirkland_Manholes-1680	83.64	Kirkland_Manholes-1681	72.36	151.4	7.45	8	PVC	0.01	1,925	85	408	493	25.6	SM5	
Kirkland_Main-889	Kirkland_Manholes-600	91.95	Kirkland_Manholes-1687	86.12	197.8	2.95	8	PVC	0.01	1,210	95	379	473	39.1	SM14-Ex-EX117	
Kirkland_Main-890	Kirkland_Manholes-1788	86.3	Kirkland_Manholes-727	84.25	363.6	0.56	8	PVC	0.01	529	12	132	143	27.1	SM14-Ex-EX167	
Kirkland_Main-891	Kirkland_Manholes-1686	60.42	Kirkland_Manholes-1685	57.24	38.9	8.17	8	PVC	0.01	2,016	0	8	8	0.4		
Kirkland_Main-892	Kirkland_Manholes-1681	72.36	Kirkland_Manholes-1685	57.24	220.4	6.86	8	PVC	0.01	1,846	88	440	528	28.6	SM5	
Kirkland_Main-893	Kirkland_Manholes-1687	86.12	Kirkland_Manholes-727	84.25	76.5	2.45	8	PVC	0.01	1,103	101	395	496	45	SM14-Ex-EX117	
Kirkland_Main-894	Kirkland_Manholes-1688	86.4	Kirkland_Manholes-1687	86.26	34.9	0.4	8	PVC	0.01	446	6	8	14	3.2		Drop Connection
Kirkland_Main-895	Kirkland_Manholes-621	70.36	Kirkland_Manholes-618	51.3	271.9	7.01	8	PVC	0.01	1,867	35	29	64	3.4	SM14-Ex-EX161	
Kirkland_Main-896	Kirkland_Manholes-617	67.92	Kirkland_Manholes-618	51.3	164.3	10.11	8	PVC	0.01	2,242	6	16	22	1	SM14-Ex-EX162	
Kirkland_Main-897	Kirkland_Manholes-1690	47.42	Kirkland_Manholes-1689	43.75	38.1	9.62	8	PVC	0.01	2,187	3	16	19	0.9	SM14-Ex-EX163	

Existing with Proposed Improvements - Peak Hour Flow - Pipe Capacity Table

Label	Upstream Node	Upstream Invert Elevation (ft)	Downstream Node	Downstream Invert Elevation (ft)	Length (ft)	Slope (%)	Diameter (in)	Material	Manning's n	Design Capacity (gpm)	Domestic Flow (gpm)	I/I Flow (gpm)	Total Flow (gpm)	Percent Full (%)	CIP No.	Notes
Kirkland_Main-898	Kirkland_Manholes-2864	27	SOUTHBAY_WETWELL	22	7.5	67.05	8	PVC	0.01	5,773	13	24	37	0.6	SM14-Ex-EX314	WW Influent Pipe
Kirkland_Main-900	Kirkland_Manholes-1691	49.07	Kirkland_Manholes-1690	47.42	170.4	0.97	8	PVC	0.01	694	2	8	10	1.5	SM14-Ex-EX163	
Kirkland_Main-901	Kirkland_Manholes-618	51.3	Kirkland_Manholes-619	48.43	55.8	5.15	8	PVC	0.01	1,600	41	54	95	5.9	SM14-Ex-EX161	
Kirkland_Main-902	Kirkland_Manholes-619	48.43	Kirkland_Manholes-1689	43.75	128.1	3.65	8	PVC	0.01	1,347	42	78	120	8.9	SM14-Ex-EX161	
Kirkland_Main-903	Kirkland_Manholes-1693	36.33	Kirkland_Manholes-1692	35.9	53.8	0.8	8	PVC	0.01	630	3	8	12	1.9		
Kirkland_Main-905	Kirkland_Manholes-1809	70.83	Kirkland_Manholes-1703	58	295.2	4.35	8	PVC	0.01	1,470	1	8	10	0.7	SM14-Ex-EX153	
Kirkland_Main-910	Kirkland_Manholes-1707	126.28	Kirkland_Manholes-1706	124.78	10	14.96	12	PVC	0.01	8,041	15	115	130	1.6	SM14-Ex-EX196	
Kirkland_Main-911	Kirkland_Manholes-1710	134.24	Kirkland_Manholes-1709	133.97	34.7	0.78	12	PVC	0.01	1,833	12	82	94	5.2	SM14-Ex-EX196	
Kirkland_Main-912	Kirkland_Manholes-1708	148.34	Kirkland_Manholes-1709	133.97	305.2	4.71	12	PVC	0.01	4,511	2	16	18	0.4	SM14-Ex-EX197	
Kirkland_Main-913	Kirkland_Manholes-1709	133.97	Kirkland_Manholes-1707	126.28	136.1	5.65	12	PVC	0.01	4,942	14	107	121	2.5	SM14-Ex-EX196	
Kirkland_Main-914	Kirkland_Manholes-2281	374.95	Kirkland_Manholes-2263	374.13	166.2	0.49	8	PVC	0.01	495	0	4	4	0.8	SM14-Ex-EX212	
Kirkland_Main-915	Kirkland_Manholes-2283	405.87	Kirkland_Manholes-2282	401.71	113.4	3.67	8	PVC	0.01	1,350	5	20	25	1.8		
Kirkland_Main-916	Kirkland_Manholes-2295	415.45	Kirkland_Manholes-2294	370.88	306.7	14.53	8	PVC	0.01	2,688	2	8	10	0.4		
Kirkland_Main-917	Kirkland_Manholes-2294	370.88	Kirkland_Manholes-2293	362.58	254.1	3.27	8	PVC	0.01	1,274	3	12	15	1.2		
Kirkland_Main-918	Kirkland_Manholes-2298	374.75	Kirkland_Manholes-2297	358.91	231	6.86	8	PVC	0.01	1,846	4	12	16	0.9	SM14-Ex-EX210	
Kirkland_Main-919	Kirkland_Manholes-2297	358.91	Kirkland_Manholes-2296	354.23	230.5	2.03	8	PVC	0.01	1,005	5	16	21	2.1	SM14-Ex-EX210	
Kirkland_Main-920	Kirkland_Manholes-2772	308.23	O-3	307.9	81.9	0.4	8	PVC	0.01	446	29	91	119	26.8		Drop Connection
Kirkland_Main-921	Kirkland_Manholes-2293	362.58	Kirkland_Manholes-2296	354.23	294.7	2.83	8	PVC	0.01	1,187	9	32	41	3.4		
Kirkland_Main-922	Kirkland_Manholes-2299	342.7	Kirkland_Manholes-2300	337.19	153.2	3.6	8	PVC	0.01	1,337	15	56	71	5.3	SM14-Ex-EX206	
Kirkland_Main-923	Kirkland_Manholes-2296	354.23	Kirkland_Manholes-2299	342.7	146.7	7.86	8	PVC	0.01	1,976	15	52	66	3.4	SM14-Ex-EX206	
Kirkland_Main-924	Kirkland_Manholes-2264	383.3	Kirkland_Manholes-2263	374.13	85.7	10.7	8	PVC	0.01	2,307	210	707	918	39.8	SM14-Ex-EX248	
Kirkland_Main-925	Kirkland_Manholes-2432	257.14	Kirkland_Manholes-2312	256.91	169.1	0.14	8	PVC	0.01	260	1	4	6	2.2		
Kirkland_Main-926	Kirkland_Manholes-2312	256.91	Kirkland_Manholes-2311	256.52	196.4	0.2	8	PVC	0.01	314	2	9	11	3.4		
Kirkland_Main-927	Kirkland_Manholes-2282	401.71	Kirkland_Manholes-2264	383.3	409.8	4.49	8	PVC	0.01	1,494	210	703	914	61.1	SM14-Ex-EX248	
Kirkland_Main-928	Kirkland_Manholes-2288	423.18	Kirkland_Manholes-2286	420.26	97.3	3	8	PVC	0.01	1,221	2	8	10	0.8		
Kirkland_Main-929	Kirkland_Manholes-2289	426.62	Kirkland_Manholes-2288	423.18	150.1	2.29	8	PVC	0.01	1,067	1	4	5	0.5		
Kirkland_Main-930	Kirkland_Manholes-2286	420.26	Kirkland_Manholes-2287	418.83	164.5	0.87	8	PVC	0.01	657	4	12	15	2.3		
Kirkland_Main-931	Kirkland_Manholes-2287	418.83	Kirkland_Manholes-2283	405.87	87.5	14.81	8	PVC	0.01	2,714	5	16	21	0.8		
Kirkland_Main-932	Kirkland_Manholes-1585	238.49	Kirkland_Manholes-1586	212.55	318.9	8.13	8	PVC	0.01	2,011	1	4	5	0.3	SM14-Ex-EX173	
Kirkland_Main-933	Kirkland_Manholes-1586	212.55	Kirkland_Manholes-1587	210.95	268.2	0.6	8	PVC	0.01	545	2	8	10	1.9	SM14-Ex-EX173	
Kirkland_Main-934	Kirkland_Manholes-1589	233.01	Kirkland_Manholes-1587	210.95	318.8	6.92	8	PVC	0.01	1,855	59	207	266	14.3	SM14-Ex-EX171	
Kirkland_Main-935	Kirkland_Manholes-1587	210.95	Kirkland_Manholes-1603	202.22	137.6	6.34	8	PVC	0.01	1,776	64	223	287	16.2	SM14-Ex-EX172	
Kirkland_Main-936	Kirkland_Manholes-1588	231.21	Kirkland_Manholes-1587	230.56	162.2	0.4	8	PVC	0.01	446	2	4	6	1.3	SM14-Ex-EX172	Drop Connection
Kirkland_Main-938	Kirkland_Manholes-1590	241.99	Kirkland_Manholes-1589	233.01	173.6	5.17	8	PVC	0.01	1,603	58	203	261	16.3	SM14-Ex-EX171	
Kirkland_Main-939	Kirkland_Manholes-1591	253.12	Kirkland_Manholes-1590	241.99	399.8	2.78	8	PVC	0.01	1,176	56	199	255	21.7	SM14-Ex-EX171	
Kirkland_Main-940	Kirkland_Manholes-1592	255.76	Kirkland_Manholes-1591	253.12	306.5	0.86	8	PVC	0.01	654	54	195	248	38	SM14-Ex-EX124	
Kirkland_Main-942	Kirkland_Manholes-1593	256.67	Kirkland_Manholes-1592	255.76	194.7	0.47	8	PVC	0.01	482	39	155	194	40.3	SM14-Ex-EX131	
Kirkland_Main-943	Kirkland_Manholes-1594	254.46	Kirkland_Manholes-1595	245.33	353	2.59	8	PVC	0.01	1,134	2	4	6	0.6	SM14-Ex-EX130	
Kirkland_Main-944	Kirkland_Manholes-1595	245.33	Kirkland_Manholes-1596	228.98	200	8.17	8	PVC	0.01	2,016	4	8	12	0.6	SM14-Ex-EX130	
Kirkland_Main-945	Kirkland_Manholes-1596	228.98	Kirkland_Manholes-1597	180.84	398.5	12.08	8	PVC	0.01	2,450	6	12	18	0.7	SM14-Ex-EX130	
Kirkland_Main-946	Kirkland_Manholes-1601	173.67	Kirkland_Manholes-1598	169.75	176.3	2.22	8	PVC	0.01	1,051	54	163	217	20.6	SM14-Ex-EX121	
Kirkland_Main-947	Kirkland_Manholes-1599	200.11	Kirkland_Manholes-1598	169.75	271.2	11.19	8	PVC	0.01	2,359	3	8	11	0.5	SM14-Ex-EX170	
Kirkland_Main-948	Kirkland_Manholes-379	279.26	Kirkland_Manholes-380	277.21	303.7	0.67	8	PVC	0.01	579	2	8	10	1.8		
Kirkland_Main-949	Kirkland_Manholes-378	285.63	Kirkland_Manholes-379	279.26	366.8	1.74	8	PVC	0.01	929	1	4	5	0.6		
Kirkland_Main-950	Kirkland_Manholes-377	262.82	Kirkland_Manholes-376	239.8	319.8	7.2	8	PVC	0.01	1,892	1	4	5	0.3		
Kirkland_Main-951	Kirkland_Manholes-376	239.8	Kirkland_Manholes-375	234.87	251.6	1.96	8	PVC	0.01	987	58	234	292	29.6		
Kirkland_Main-953	Kirkland_Manholes-382	308.23	Kirkland_Manholes-381	307.41	91.4	0.9	8	PVC	0.01	668	2	8	10	1.6		
Kirkland_Main-954	Kirkland_Manholes-381	307.41	Kirkland_Manholes-383	304.37	123.9	2.45	8	PVC	0.01	1,104	3	12	15	1.3		
Kirkland_Main-955	Kirkland_Manholes-383	304.37	Kirkland_Manholes-384	296.91	253.7	2.94	8	PVC	0.01	1,209	4	16	20	1.6		
Kirkland_Main-956	Kirkland_Manholes-384	296.91	Kirkland_Manholes-424	292.81	99.3	4.13	8	PVC	0.01	1,432	5	20	25	1.7		
Kirkland_Main-957	Kirkland_Manholes-873	311.45	Kirkland_Manholes-385	303.54	299	2.65	8	PVC	0.01	1,147	2	4	6	0.5	SM14-Ex-EX33	
Kirkland_Main-958	Kirkland_Manholes-385	303.54	Kirkland_Manholes-387	300.3	93.5	3.46	8	PVC	0.01	1,312	3	8	11	0.8	SM14-Ex-EX33	
Kirkland_Main-959	Kirkland_Manholes-386	300.85	Kirkland_Manholes-387	300.3	138.6	0.4	8	PVC	0.01	444	2	4	6	1.4	SM14-Ex-EX33	
Kirkland_Main-960	Kirkland_Manholes-387	300.3	Kirkland_Manholes-388	297.69	129.3	2.02	8	PVC	0.01	1,002	6	16	22	2.2	SM14-Ex-EX33	
Kirkland_Main-962	Kirkland_Manholes-2611	254.27	Kirkland_Manholes-2612	250.12	152.9	2.71	8	PVC	0.01	1,162	3	4	7	0.6	SM14-Ex-EX297	
Kirkland_Main-963	Kirkland_Manholes-1075	291.84	Kirkland_Manholes-1121	289.91	99	1.95	8	PVC	0.01	984	43	131	350	35.5		
Kirkland_Main-964	Kirkland_Manholes-1121	289.91	Kirkland_Manholes-1068	279.38	106.4	9.89	8	PVC	0.01	2,218	44	135	355	16		
Kirkland_Main-966	Kirkland_Manholes-1105	155.49	Kirkland_Manholes-1052	151.4	310	1.32	8	PVC	0.01	810	83	299	382	47.2		
Kirkland_Main-967	Kirkland_Manholes-1108	160.8	Kirkland_Manholes-1105	155.49	333.3	1.59	8	PVC	0.01	890	9	13	22	2.4		
Kirkland_Main-968	Kirkland_Manholes-1104	175.28	Kirkland_Manholes-1106	168.9	388	1.64	18	PVC	0.01	7,859	580	2,118	2,698	34.3		
Kirkland_Main-969	Kirkland_Manholes-1109	162.78	Kirkland_Manholes-1108	160.8	303.1	0.65	8	PVC	0.01	570	1	9	10	1.7		
Kirkland_Main-970	Kirkland_Manholes-1110	163.51	Kirkland_Manholes-1109	162.78	317.4	0.23	8	PVC	0.01	338	1	4	5	1.5		

Existing with Proposed Improvements - Peak Hour Flow - Pipe Capacity Table

Label	Upstream Node	Upstream Invert Elevation (ft)	Downstream Node	Downstream Invert Elevation (ft)	Length (ft)	Slope (%)	Diameter (in)	Material	Manning's n	Design Capacity (gpm)	Domestic Flow (gpm)	I/I Flow (gpm)	Total Flow (gpm)	Percent Full (%)	CIP No.	Notes
Kirkland_Main-972	Kirkland_Manholes-1128	162.57	O-7	162.29	71	0.4	24	PVC	0.01	8,346	280	695	1,151	13.8	SM14-Ex-EX4	
Kirkland_Main-973	Kirkland_Manholes-1127	163.92	Kirkland_Manholes-1128	162.57	132.6	1.02	24	PVC	0.01	13,318	280	687	1,143	8.6	SM14-Ex-EX4	
Kirkland_Main-974	Kirkland_Manholes-1086	198.2	Kirkland_Manholes-1122	184.29	391.8	3.55	8	PVC	0.01	1,328	10	48	58	4.3		
Kirkland_Main-975	Kirkland_Manholes-1122	184.29	Kirkland_Manholes-1123	182.63	257.7	0.64	24	PVC	0.01	10,594	184	620	980	9.2	SM14-Ex-EX4	
Kirkland_Main-976	Kirkland_Manholes-1130	185.43	Kirkland_Manholes-1122	185.35	20.3	0.4	12	PVC	0.01	1,314	173	568	918	69.8	SM14-Ex-EX320	Drop Connection
Kirkland_Main-977	Kirkland_Manholes-1123	182.63	Kirkland_Manholes-1124	177.02	186.2	3.01	24	PVC	0.01	22,913	190	624	989	4.3	SM14-Ex-EX4	
Kirkland_Main-978	Kirkland_Manholes-1124	177.02	Kirkland_Manholes-1125	167.88	251.4	3.64	24	PVC	0.01	25,165	248	660	1,083	4.3	SM14-Ex-EX4	
Kirkland_Main-979	Kirkland_Manholes-1125	167.88	Kirkland_Manholes-1126	164.51	134.8	2.5	24	PVC	0.01	20,870	280	679	1,135	5.4	SM14-Ex-EX4	
Kirkland_Main-980	Kirkland_Manholes-2840	90.84	Kirkland_Manholes-2841	31.53	332.1	17.86	8	PVC	0.01	2,980	3	12	15	0.5	SM14-Ex-EX310	
Kirkland_Main-981	Kirkland_Manholes-2851	10.8	Kirkland_Manholes-2852	10.72	17.2	0.47	18	PVC	0.01	4,181	254	784	1,037	24.8	SM14-Ex-EX289	
Kirkland_Main-982	Kirkland_Manholes-2853	25.84	Kirkland_Manholes-2852	10.72	47.1	32.11	8	PVC	0.01	3,995	0	6	6	0.2	SM14-Ex-EX289	
Kirkland_Main-983	Kirkland_Manholes-2852	10.72	KC_Manholes-18	10.29	84.8	0.51	18	PVC	0.01	4,364	254	796	1,050	24	SM14-Ex-EX289	
Kirkland_Main-984	Kirkland_Manholes-2788	251.6	Kirkland_Manholes-2789	247.4	283.4	1.48	8	PVC	0.01	858	15	91	106	12.4	SM14-Ex-EX313	
Kirkland_Main-985	Kirkland_Manholes-2789	247.4	Kirkland_Manholes-2790	235.81	170.4	6.8	8	PVC	0.01	1,839	17	95	112	6.1	SM14-Ex-EX313	
Kirkland_Main-987	Kirkland_Manholes-2790	235.81	Kirkland_Manholes-2791	226.53	127.8	7.26	8	PVC	0.01	1,900	17	99	117	6.1	SM14-Ex-EX313	
Kirkland_Main-988	Kirkland_Manholes-2791	226.53	Kirkland_Manholes-2792	199.25	298.7	9.13	8	PVC	0.01	2,131	19	103	122	5.7	SM14-Ex-EX313	
Kirkland_Main-989	Kirkland_Manholes-2794	201.04	Kirkland_Manholes-2792	199.25	290.5	0.62	8	PVC	0.01	553	3	8	11	1.9	SM14-Ex-EX312	
Kirkland_Main-991	Kirkland_Manholes-2795	201.42	Kirkland_Manholes-2794	201.04	162	0.23	8	PVC	0.01	341	1	4	5	1.5	SM14-Ex-EX312	
Kirkland_Main-992	Kirkland_Manholes-2792	199.25	Kirkland_Manholes-2793	190.95	116.2	7.14	8	PVC	0.01	1,885	29	115	144	7.6	SM14-Ex-EX313	
Kirkland_Main-993	Kirkland_Manholes-2793	190.95	Kirkland_Manholes-2803	158.22	135.7	24.12	8	PVC	0.01	3,462	29	119	149	4.3	SM14-Ex-EX313	
Kirkland_Main-994	Kirkland_Manholes-2842	26.9	Kirkland_Manholes-2850	13.3	475.2	2.86	24	PVC	0.01	22,330	479	1,240	1,790	8	SM14-Ex-EX309	
Kirkland_Main-995	Kirkland_Manholes-2850	13.3	KC_Manholes-18	10.29	41.7	7.21	24	PVC	0.01	35,453	480	1,246	1,798	5.1	SM14-Ex-EX309	
Kirkland_Main-996	Kirkland_Manholes-2856	18.03	Kirkland_Manholes-2845	16.72	134.6	0.98	8	PVC	0.01	696	11	14	25	3.7	SM14-Ex-EX315	
Kirkland_Main-997	Kirkland_Manholes-2857	19.7	Kirkland_Manholes-2856	18.03	135.5	1.23	8	PVC	0.01	783	11	9	21	2.7	SM14-Ex-EX315	
Kirkland_Main-998	Kirkland_Manholes-1928	375.97	Kirkland_Manholes-1929	374.67	53.7	2.42	12	PVC	0.01	3,235	123	536	659	20.4	SM14-Ex-EX205	
Kirkland_Main-999	Kirkland_Manholes-1929	374.67	Kirkland_Manholes-1579	359.44	398.3	3.82	12	PVC	0.01	4,065	155	600	755	18.6	SM14-Ex-EX205	
Kirkland_Main-1000	Kirkland_Manholes-1930	369.31	Kirkland_Manholes-1931	367.07	97.4	2.3	8	PVC	0.01	1,069	2	8	10	1		
Kirkland_Main-1001	Kirkland_Manholes-1931	367.07	Kirkland_Manholes-1932	360.4	233.1	2.86	8	PVC	0.01	1,193	3	12	15	1.3		
Kirkland_Main-1003	Kirkland_Manholes-1932	360.4	Kirkland_Manholes-1954	357.36	158.2	1.92	8	PVC	0.01	977	4	16	19	2		
Kirkland_Main-1004	Kirkland_Manholes-1935	274.07	Kirkland_Manholes-1881	267.11	156.7	4.44	8	PVC	0.01	1,486	29	83	113	7.6		
Kirkland_Main-1005	Kirkland_Manholes-1951	275.06	Kirkland_Manholes-1935	274.07	209.5	0.47	8	PVC	0.01	485	16	44	60	12.4		
Kirkland_Main-1006	Kirkland_Manholes-1936	301.29	Kirkland_Manholes-1935	274.07	237.6	11.46	8	PVC	0.01	2,387	11	36	47	2		
Kirkland_Main-1007	Kirkland_Manholes-1933	343.68	Kirkland_Manholes-1934	342.88	296	0.27	8	PVC	0.01	367	6	32	38	10.4		
Kirkland_Main-1008	Kirkland_Manholes-1954	357.36	Kirkland_Manholes-1934	342.88	118.8	12.19	8	PVC	0.01	2,462	4	20	24	1		
Kirkland_Main-1009	Kirkland_Manholes-1934	342.88	Kirkland_Manholes-1961	341.24	125.1	1.31	8	PVC	0.01	807	10	56	66	8.2		
Kirkland_Main-1010	Kirkland_Manholes-1938	323.43	Kirkland_Manholes-1936	301.29	243	9.11	8	PVC	0.01	2,128	11	32	42	2		
Kirkland_Main-1011	Kirkland_Manholes-1939	324.34	Kirkland_Manholes-1938	323.43	100	0.91	8	PVC	0.01	673	9	24	33	4.9		
Kirkland_Main-1012	Kirkland_Manholes-1937	332.23	Kirkland_Manholes-1938	323.43	194.4	4.53	8	PVC	0.01	1,500	2	4	6	0.4		
Kirkland_Main-1013	Kirkland_Manholes-1940	363.18	Kirkland_Manholes-1941	361.64	56.6	2.72	8	PVC	0.01	1,163	0	4	4	0.3		
Kirkland_Main-1014	Kirkland_Manholes-391	302.9	Kirkland_Manholes-389	295.78	243.6	2.92	8	PVC	0.01	1,205	31	127	158	13.1	SM14-Ex-EX50	
Kirkland_Main-1015	Kirkland_Manholes-389	295.78	Kirkland_Manholes-393	288.03	97.8	7.93	8	PVC	0.01	1,985	40	151	191	9.6	SM14-Ex-EX50	
Kirkland_Main-1016	Kirkland_Manholes-393	288.03	Kirkland_Manholes-380	277.21	135.7	7.97	8	PVC	0.01	1,991	42	159	201	10.1	SM14-Ex-EX50	
Kirkland_Main-1017	Kirkland_Manholes-395	253.88	Kirkland_Manholes-396	249.55	242.3	1.79	8	PVC	0.01	942	51	207	258	27.4		
Kirkland_Main-1018	Kirkland_Manholes-398	254.33	Kirkland_Manholes-397	247.33	147.9	4.73	8	PVC	0.01	1,534	1	4	5	0.3		
Kirkland_Main-1019	Kirkland_Manholes-396	249.55	Kirkland_Manholes-397	247.33	240.2	0.92	8	PVC	0.01	678	54	219	273	40.3		
Kirkland_Main-1020	Kirkland_Manholes-394	266.89	Kirkland_Manholes-395	253.88	150	8.67	8	PVC	0.01	2,076	49	183	232	11.2	SM14-Ex-EX50	
Kirkland_Main-1021	Kirkland_Manholes-380	277.21	Kirkland_Manholes-394	266.89	136.7	7.55	8	PVC	0.01	1,937	45	171	216	11.2	SM14-Ex-EX50	
Kirkland_Main-1022	Kirkland_Manholes-898	306.89	Kirkland_Manholes-899	305.17	102.3	1.68	8	PVC	0.01	914	1	8	9	1		
Kirkland_Main-1023	Kirkland_Manholes-899	305.17	Kirkland_Manholes-900	302.97	237.5	0.93	8	PVC	0.01	679	3	12	15	2.2		
Kirkland_Main-1024	Kirkland_Manholes-444	92.89	Kirkland_Manholes-443	91.49	172.9	0.81	8	PVC	0.01	634	4	43	46	7.3		
Kirkland_Main-1025	Kirkland_Manholes-525	156.27	Kirkland_Manholes-526	148.56	279.6	2.76	8	PVC	0.01	1,171	4	25	29	2.4	SM10	
Kirkland_Main-1027	Kirkland_Manholes-1198	189.72	Kirkland_Manholes-497	188.11	129.7	1.24	8	PVC	0.01	786	13	49	62	7.9	SM14-Ex-EX80	
Kirkland_Main-1030	Kirkland_Manholes-520	182.65	Kirkland_Manholes-519	157.09	301.6	8.48	8	PVC	0.01	2,053	4	16	20	1	SM10	
Kirkland_Main-1031	Kirkland_Manholes-499	185.94	Kirkland_Manholes-523	180.21	279.4	2.05	8	PVC	0.01	1,010	19	74	93	9.2	SM10	
Kirkland_Main-1032	Kirkland_Manholes-523	180.21	Kirkland_Manholes-522	152.47	278.9	9.95	8	PVC	0.01	2,224	21	82	104	4.7	SM10	
Kirkland_Main-1033	Kirkland_Manholes-522	152.47	Kirkland_Manholes-521	145.96	154.4	4.22	8	PVC	0.01	1,448	22	91	113	7.8	SM10	
Kirkland_Main-1034	Kirkland_Manholes-521	145.96	Kirkland_Manholes-518	138.7	160.6	4.52	8	PVC	0.01	1,499	24	99	122	8.2	SM10	
Kirkland_Main-1036	Kirkland_Manholes-518	138.7	Kirkland_Manholes-1179	123.76	316.8	4.72	8	PVC	0.01	1,531	31	132	163	10.6	SM10	
Kirkland_Main-1037	Kirkland_Manholes-519	157.09	Kirkland_Manholes-518	138.7	337.5	5.45	8	PVC	0.01	1,646	7	25	32	1.9	SM10	
Kirkland_Main-1041	Kirkland_Manholes-1235	275.6	Kirkland_Manholes-1233	274.4	201.2	0.6	8	PVC	0.01	545	2	8	10	1.9		
Kirkland_Main-1042	Kirkland_Manholes-1240	250.21	Kirkland_Manholes-1230	236.32	226.8	6.13	8	PVC	0.01	1,745	4	8	13	0.7	SM14-Ex-EX92	
Kirkland_Main-1043	Kirkland_Manholes-1243	249.45	Kirkland_Manholes-1242	244.28	74.2	6.97	8	PVC	0.01	1,862	1	4	5	0.3		

Existing with Proposed Improvements - Peak Hour Flow - Pipe Capacity Table

Label	Upstream Node	Upstream Invert Elevation (ft)	Downstream Node	Downstream Invert Elevation (ft)	Length (ft)	Slope (%)	Diameter (in)	Material	Manning's n	Design Capacity (gpm)	Domestic Flow (gpm)	I/I Flow (gpm)	Total Flow (gpm)	Percent Full (%)	CIP No.	Notes
Kirkland_Main-1044	Kirkland_Manholes-1206	193.92	Kirkland_Manholes-1149	192.13	296.5	0.6	8	PVC	0.01	548	16	56	71	13	SM14-Ex-EX89	
Kirkland_Main-1049	Kirkland_Manholes-1268	189.24	Kirkland_Manholes-1269	174.05	110.9	13.69	8	PVC	0.01	2,609	4	16	20	0.8	SM14-Ex-EX107	
Kirkland_Main-1050	Kirkland_Manholes-1269	174.05	Kirkland_Manholes-1259	154.8	228.2	8.43	8	PVC	0.01	2,048	5	25	29	1.4	SM14-Ex-EX107	
Kirkland_Main-1051	Kirkland_Manholes-1267	201.75	Kirkland_Manholes-1268	189.24	323.1	3.87	8	PVC	0.01	1,387	3	8	11	0.8	SM14-Ex-EX107	
Kirkland_Main-1052	Kirkland_Manholes-1265	168.12	Kirkland_Manholes-1262	156.59	138.9	8.3	8	PVC	0.01	2,031	4	25	28	1.4		
Kirkland_Main-1053	Kirkland_Manholes-1497	270.45	Kirkland_Manholes-1499	268.92	211.1	0.72	8	PVC	0.01	600	16	56	72	12		
Kirkland_Main-1054	Kirkland_Manholes-1315	270.9	Kirkland_Manholes-1497	270.45	108.5	0.41	8	PVC	0.01	454	15	52	66	14.6		
Kirkland_Main-1055	Kirkland_Manholes-704	272.37	Kirkland_Manholes-145	271.65	145.7	0.49	8	PVC	0.01	496	12	36	48	9.6		
Kirkland_Main-1057	Kirkland_Manholes-1220	255.3	Kirkland_Manholes-1140	220.91	332.7	10.34	8	PVC	0.01	2,267	2	8	10	0.5	SM14-Ex-EX84	
Kirkland_Main-1058	Kirkland_Manholes-1222	248.84	Kirkland_Manholes-1142	218.06	350.4	8.79	8	PVC	0.01	2,090	3	8	12	0.6	SM14-Ex-EX85	
Kirkland_Main-1059	Kirkland_Manholes-1140	220.91	Kirkland_Manholes-1142	218.06	314	0.91	8	PVC	0.01	672	4	16	21	3.1	SM4	
Kirkland_Main-1061	Kirkland_Manholes-1224	232.76	Kirkland_Manholes-500	209.24	344.5	6.83	8	PVC	0.01	1,842	2	8	11	0.6	SM14-Ex-EX87	
Kirkland_Main-1062	Kirkland_Manholes-1085	204.43	Kirkland_Manholes-1130	185.43	381.7	4.98	8	PVC	0.01	1,573	152	564	892	56.7		
Kirkland_Main-1063	Kirkland_Manholes-1120	158.13	Kirkland_Manholes-712	157.06	229.6	0.47	8	PVC	0.01	481	27	11	38	8	SM14-Ex-EX1	
Kirkland_Main-1066	Kirkland_Manholes-1512	281.18	Kirkland_Manholes-1513	263.11	227.7	7.94	8	PVC	0.01	1,986	1	4	5	0.3	SM14-Ex-EX132	
Kirkland_Main-1067	Kirkland_Manholes-1161	78.67	Kirkland_Manholes-1162	78.51	20.6	0.78	15	PVC	0.01	3,326	67	403	470	14.1	SM14-Ex-EX77	
Kirkland_Main-1068	Kirkland_Manholes-1132	188.66	Kirkland_Manholes-1133	181.56	258.9	2.74	8	PVC	0.01	1,168	3	4	7	0.6	SM14-Ex-EX58	
Kirkland_Main-1069	Kirkland_Manholes-616	72.16	Kirkland_Manholes-617	67.92	242.5	1.75	8	PVC	0.01	932	3	8	12	1.2	SM14-Ex-EX162	
Kirkland_Main-1070	Kirkland_Manholes-1699	108.13	Kirkland_Manholes-1700	106.17	216.2	0.91	8	PVC	0.01	671	0	8	8	1.2	SM14-Ex-EX150	
Kirkland_Main-1071	Kirkland_Manholes-1700	106.17	Kirkland_Manholes-1802	95.68	325.3	3.22	8	PVC	0.01	1,266	4	16	20	1.6	SM14-Ex-EX150	
Kirkland_Main-1074	Kirkland_Manholes-1613	87.49	Kirkland_Manholes-1788	86.3	197.1	0.6	8	PVC	0.01	548	12	123	135	24.7	SM14-Ex-EX167	
Kirkland_Main-1075	Kirkland_Manholes-1793	15.37	Kirkland_Manholes-1794	12.63	22.1	12.39	8	PVC	0.01	2,482	26	19	46	1.8		
Kirkland_Main-1076	Kirkland_Manholes-1795	13.3	Kirkland_Manholes-1794	12.63	41.9	1.6	15	PVC	0.01	4,763	345	753	1,098	23.1		
Kirkland_Main-1077	Kirkland_Manholes-1789	14.67	Kirkland_Manholes-1790	14.6	18.2	0.38	21	PVC	0.01	5,726	339	734	1,073	18.7		
Kirkland_Main-1078	Kirkland_Manholes-1790	14.6	Kirkland_Manholes-1792	14.49	82.9	0.13	21	PVC	0.01	3,367	339	740	1,080	32.1		
Kirkland_Main-1079	Kirkland_Manholes-1791	8.2	PLAZA_WW	6	10.6	20.76	18	PVC	0.01	27,925	390	896	1,286	4.6	SM14-Ex-EX182	
Kirkland_Main-1080	Kirkland_Manholes-1792	14.49	Kirkland_Manholes-1795	13.3	199	0.6	21	PVC	0.01	7,159	340	747	1,087	15.2		
Kirkland_Main-1081	Kirkland_Manholes-1800	147.89	Kirkland_Manholes-1799	133.76	154.6	9.14	8	PVC	0.01	2,131	2	8	10	0.5	SM14-Ex-EX146	
Kirkland_Main-1082	Kirkland_Manholes-1799	133.76	Kirkland_Manholes-1798	126.65	165.5	4.3	8	PVC	0.01	1,461	5	25	30	2.1	SM14-Ex-EX146	
Kirkland_Main-1083	Kirkland_Manholes-1797	142.57	Kirkland_Manholes-1798	126.65	291.9	5.45	8	PVC	0.01	1,647	49	196	245	14.9	SM4	
Kirkland_Main-1084	Kirkland_Manholes-1796	160.8	Kirkland_Manholes-1797	142.57	315.3	5.78	8	PVC	0.01	1,695	46	179	225	13.3	SM4	
Kirkland_Main-1085	Kirkland_Manholes-1798	126.65	Kirkland_Manholes-1801	112.29	288.6	4.97	8	PVC	0.01	1,573	55	229	283	18	SM4	
Kirkland_Main-1086	Kirkland_Manholes-2191	134.63	Kirkland_Manholes-2190	132.39	117.1	1.91	8	PVC	0.01	975	3	16	20	2		
Kirkland_Main-1088	Kirkland_Manholes-2194	68	Kirkland_Manholes-2193	64.5	142	2.47	8	PVC	0.01	1,107	1	8	9	0.8	SM14-Ex-EX187	
Kirkland_Main-1089	Kirkland_Manholes-2193	64.5	Kirkland_Manholes-2145	63.1	194.7	0.72	8	PVC	0.01	598	4	41	46	7.6	SM14-Ex-EX187	
Kirkland_Main-1091	Kirkland_Manholes-2187	114.37	Kirkland_Manholes-2185	103.23	164.5	6.77	8	PVC	0.01	1,835	6	16	22	1.2	SM14-Ex-EX188	
Kirkland_Main-1092	Kirkland_Manholes-2185	103.23	Kirkland_Manholes-2184	75.09	227	12.4	8	PVC	0.01	2,482	31	66	97	3.9	SM14-Ex-EX188	
Kirkland_Main-1093	Kirkland_Manholes-2184	75.09	Kirkland_Manholes-2144	65.5	214.4	4.47	8	PVC	0.01	1,491	31	74	105	7	SM14-Ex-EX188	
Kirkland_Main-1094	Kirkland_Manholes-2199	42.12	Kirkland_Manholes-2201	34.26	130.3	6.03	8	PVC	0.01	1,731	49	6	55	3.2		
Kirkland_Main-1095	Kirkland_Manholes-2201	34.26	Kirkland_Manholes-2200	29.87	27.9	15.75	8	PVC	0.01	2,798	49	13	62	2.2		
Kirkland_Main-1096	Kirkland_Manholes-2098	53.6	Kirkland_Manholes-2097	45.25	198.1	4.22	8	PVC	0.01	1,448	2	6	8	0.6	SM14-Ex-EX233	
Kirkland_Main-1097	Kirkland_Manholes-2195	483.44	Kirkland_Manholes-2196	481.85	326.8	0.49	8	PVC	0.01	492	1	4	5	1		
Kirkland_Main-1098	Kirkland_Manholes-2196	481.85	Kirkland_Manholes-2197	480.89	188.7	0.51	8	PVC	0.01	503	1	8	9	1.8		
Kirkland_Main-1099	Kirkland_Manholes-2111	59.56	Kirkland_Manholes-2099	57.72	398	0.46	12	PVC	0.01	1,413	69	194	263	18.6	SM14-Ex-EX222	
Kirkland_Main-1100	Kirkland_Manholes-2100	58.67	Kirkland_Manholes-2099	57.72	62.5	1.52	8	PVC	0.01	869	8	18	27	3.1	SM14-Ex-EX234	
Kirkland_Main-1101	Kirkland_Manholes-2101	73.68	Kirkland_Manholes-2100	58.67	124.9	12.02	8	PVC	0.01	2,444	8	12	20	0.8		
Kirkland_Main-1102	Kirkland_Manholes-2102	127.52	Kirkland_Manholes-2101	73.68	250.6	21.48	8	PVC	0.01	3,268	4	6	10	0.3		
Kirkland_Main-1104	Kirkland_Manholes-2103	51.49	Kirkland_Manholes-2104	41.29	235.7	4.33	8	PVC	0.01	1,467	0	6	7	0.5	SM14-Ex-EX231	
Kirkland_Main-1105	Kirkland_Manholes-2447	28.08	Kirkland_Manholes-2448	25.41	138	1.94	12	PVC	0.01	2,892	1	6	8	0.3		
Kirkland_Main-1106	Kirkland_Manholes-2448	25.41	Kirkland_Manholes-2451	24.29	346.6	0.32	12	PVC	0.01	1,182	12	19	32	2.7		
Kirkland_Main-1107	Kirkland_Manholes-2449	27.6	Kirkland_Manholes-2448	25.41	29.8	7.34	8	PVC	0.01	1,910	9	6	16	0.8		
Kirkland_Main-1108	Kirkland_Manholes-2450	27.97	Kirkland_Manholes-2451	24.29	50.3	7.31	8	PVC	0.01	1,906	2	13	15	0.8		
Kirkland_Main-1109	Kirkland_Manholes-2491	35.69	Kirkland_Manholes-2450	27.97	197.9	3.9	8	PVC	0.01	1,393	1	6	7	0.5	SM14-Ex-EX278	
Kirkland_Main-1110	Kirkland_Manholes-2451	24.29	Kirkland_Manholes-2452	24.18	330.9	0.03	12	PVC	0.01	374	14	39	53	14.2		
Kirkland_Main-1111	Kirkland_Manholes-2452	24.18	Kirkland_Manholes-2454	23.57	255.1	0.24	12	PVC	0.01	1,016	22	58	81	8		
Kirkland_Main-1112	Kirkland_Manholes-2453	27.74	Kirkland_Manholes-2452	24.18	62.2	5.72	8	PVC	0.01	1,686	8	13	21	1.2		
Kirkland_Main-1113	Kirkland_Manholes-2093	44.98	Kirkland_Manholes-2453	27.74	236.1	7.3	8	PVC	0.01	1,905	7	6	13	0.7	SM14-Ex-EX276	
Kirkland_Main-1114	Kirkland_Manholes-2097	45.25	Kirkland_Manholes-2455	44.41	209.1	0.4	8	PVC	0.01	446	6	13	19	4.2	SM14-Ex-EX233	Drop Connection
Kirkland_Main-1115	Kirkland_Manholes-2455	26.2	Kirkland_Manholes-2454	23.57	36.4	7.21	8	PVC	0.01	1,893	7	19	27	1.4	SM14-Ex-EX233	
Kirkland_Main-1116	Kirkland_Manholes-2454	23.57	Kirkland_Manholes-2456	21.67	413.5	0.46	12	PVC	0.01	1,410	29	84	114	8.1		
Kirkland_Main-1117	Kirkland_Manholes-2457	26.27	Kirkland_Manholes-2456	21.67	49.5	9.28	8	PVC	0.01	2,148	7	19	27	1.2		
Kirkland_Main-1118	Kirkland_Manholes-2202	26.91	Kirkland_Manholes-2305	25.32	49.2	3.23	8	PVC	0.01	1,266	49	26	75	5.9		Drop Connection

Existing with Proposed Improvements - Peak Hour Flow - Pipe Capacity Table

Label	Upstream Node	Upstream Invert Elevation (ft)	Downstream Node	Downstream Invert Elevation (ft)	Length (ft)	Slope (%)	Diameter (in)	Material	Manning's n	Design Capacity (gpm)	Domestic Flow (gpm)	I/I Flow (gpm)	Total Flow (gpm)	Percent Full (%)	CIP No.	Notes
Kirkland_Main-1119	Kirkland_Manholes-2205	23.1	Kirkland_Manholes-2306	15.63	44.6	16.73	8	PVC	0.01	2,884	6	32	39	1.3		Drop Connection
Kirkland_Main-1120	Kirkland_Manholes-2306	15.63	Kirkland_Manholes-2305	15.26	357	0.1	21	PVC	0.01	2,976	213	643	856	28.8		
Kirkland_Main-1121	Kirkland_Manholes-2307	15.73	Kirkland_Manholes-2306	15.63	136.3	0.07	21	PVC	0.01	2,504	207	604	811	32.4		
Kirkland_Main-1122	Kirkland_Manholes-2217	22.48	Kirkland_Manholes-2308	22.33	38	0.4	8	PVC	0.01	446	11	39	50	11.2		Drop Connection
Kirkland_Main-1123	Kirkland_Manholes-2308	15.98	Kirkland_Manholes-2307	15.73	271.4	0.09	21	PVC	0.01	2,806	199	597	796	28.4		
Kirkland_Main-1124	Kirkland_Manholes-2309	16.24	Kirkland_Manholes-2308	15.98	211.8	0.12	21	PVC	0.01	3,239	186	552	738	22.8		
Kirkland_Main-1125	Kirkland_Manholes-2313	16.39	Kirkland_Manholes-2309	16.24	162.2	0.09	21	PVC	0.01	2,811	181	545	727	25.9		
Kirkland_Main-1126	Kirkland_Manholes-2314	16.65	Kirkland_Manholes-2313	16.39	183.4	0.14	21	PVC	0.01	3,481	167	500	667	19.2		
Kirkland_Main-1127	Kirkland_Manholes-2315	16.77	Kirkland_Manholes-2314	16.65	235.7	0.05	21	PVC	0.01	2,086	148	416	564	27		
Kirkland_Main-1128	Kirkland_Manholes-2316	17.03	Kirkland_Manholes-2315	16.77	315.7	0.08	21	PVC	0.01	2,653	148	409	557	21		
Kirkland_Main-1129	Kirkland_Manholes-2317	17.2	Kirkland_Manholes-2316	17.03	183.4	0.09	21	PVC	0.01	2,815	138	403	541	19.2		
Kirkland_Main-1130	Kirkland_Manholes-2155	23.66	Kirkland_Manholes-2318	17.6	47.1	12.87	8	PVC	0.01	2,530	27	97	124	4.9		
Kirkland_Main-1131	Kirkland_Manholes-2318	17.6	Kirkland_Manholes-2317	17.2	364	0.11	21	PVC	0.01	3,053	131	390	521	17		
Kirkland_Main-1132	Kirkland_Manholes-2319	17.7	Kirkland_Manholes-2318	17.6	48.4	0.21	21	PVC	0.01	4,200	102	279	382	9.1		
Kirkland_Main-1136	Kirkland_Manholes-2874	209.8	Kirkland_Manholes-2873	208.01	164.9	1.09	8	PVC	0.01	735	0	4	4	0.5		
Kirkland_Main-1137	Kirkland_Manholes-2873	208.01	Kirkland_Manholes-2872	207.03	88.7	1.1	8	PVC	0.01	741	0	8	8	1.1		
Kirkland_Main-1138	Kirkland_Manholes-2872	207.03	Kirkland_Manholes-2871	205.15	113.5	1.66	8	PVC	0.01	907	0	16	16	1.8		
Kirkland_Main-1139	Kirkland_Manholes-2871	205.15	Kirkland_Manholes-2869	204.84	44.2	0.7	8	PVC	0.01	591	0	20	20	3.4		
Kirkland_Main-1140	Kirkland_Manholes-2869	204.84	Kirkland_Manholes-2870	201.21	123.4	2.94	18	PVC	0.01	10,510	549	2,062	2,611	24.8		
Kirkland_Main-1141	Kirkland_Manholes-2870	201.21	Kirkland_Manholes-1103	198.97	205	1.09	18	PVC	0.01	6,407	549	2,066	2,615	40.8		
Kirkland_Main-1142	Kirkland_Manholes-2875	310.11	Kirkland_Manholes-898	306.89	269.8	1.19	8	PVC	0.01	770	0	4	4	0.5		
Kirkland_Main-1143	Kirkland_Manholes-2475	210.58	Kirkland_Manholes-2477	189.6	360	5.83	8	PVC	0.01	1,702	2	4	6	0.4	SM14-Ex-EX241	
Kirkland_Main-1144	Kirkland_Manholes-2478	190.32	Kirkland_Manholes-2477	189.6	67.1	1.07	8	PVC	0.01	730	1	4	5	0.7	SM14-Ex-EX241	
Kirkland_Main-1145	Kirkland_Manholes-2477	189.6	Kirkland_Manholes-2479	186.26	224.2	1.49	8	PVC	0.01	861	4	12	16	1.8	SM14-Ex-EX241	
Kirkland_Main-1146	Kirkland_Manholes-2479	186.26	Kirkland_Manholes-2482	184.91	81	1.67	8	PVC	0.01	910	6	24	30	3.3		
Kirkland_Main-1147	Kirkland_Manholes-2480	187.23	Kirkland_Manholes-2479	186.26	143.4	0.68	8	PVC	0.01	580	2	8	10	1.8	SM14-Ex-EX241	
Kirkland_Main-1148	Kirkland_Manholes-2489	190.15	Kirkland_Manholes-2480	187.23	230.1	1.27	8	PVC	0.01	794	1	4	5	0.6	SM14-Ex-EX241	
Kirkland_Main-1149	Kirkland_Manholes-2481	184.88	Kirkland_Manholes-2490	173.27	348.4	3.33	8	PVC	0.01	1,287	2	4	6	0.5	SM14-Ex-EX242	
Kirkland_Main-1150	Kirkland_Manholes-2482	184.91	Kirkland_Manholes-2483	165.54	140.6	13.78	8	PVC	0.01	2,617	7	28	35	1.3		
Kirkland_Main-1152	Kirkland_Manholes-2483	165.54	Kirkland_Manholes-2488	154.5	273.8	4.03	8	PVC	0.01	1,416	9	32	40	2.9		
Kirkland_Main-1153	Kirkland_Manholes-2488	154.5	Kirkland_Manholes-2487	153.78	111.9	0.64	8	PVC	0.01	566	10	36	46	8.1		
Kirkland_Main-1154	Kirkland_Manholes-2490	173.27	Kirkland_Manholes-2485	153.26	284.1	7.04	8	PVC	0.01	1,871	24	75	100	5.3	SM14-Ex-EX242	
Kirkland_Main-1156	Kirkland_Manholes-2484	189.79	Kirkland_Manholes-2485	153.26	364.5	10.02	8	PVC	0.01	2,232	2	4	6	0.3	SM14-Ex-EX239	
Kirkland_Main-1157	Kirkland_Manholes-2487	153.78	Kirkland_Manholes-2486	152.49	105	1.23	8	PVC	0.01	782	10	40	50	6.4		
Kirkland_Main-1158	Kirkland_Manholes-2485	153.26	Kirkland_Manholes-2486	152.49	113.6	0.68	8	PVC	0.01	580	28	83	111	19.1	SM14-Ex-EX239	
Kirkland_Main-1159	Kirkland_Manholes-1429	514.5	Kirkland_Manholes-1427	513.21	125.2	1.03	8	PVC	0.01	715	3	16	19	2.6		
Kirkland_Main-1160	Kirkland_Manholes-1427	513.21	Kirkland_Manholes-1428	512.46	129.3	0.58	8	PVC	0.01	537	5	24	29	5.4		
Kirkland_Main-1161	Kirkland_Manholes-1428	512.46	Kirkland_Manholes-1434	511.6	190.6	0.45	8	PVC	0.01	474	5	28	33	7		
Kirkland_Main-1162	Kirkland_Manholes-1430	516.64	Kirkland_Manholes-1429	514.5	144.2	1.48	8	PVC	0.01	859	3	12	14	1.7		
Kirkland_Main-1164	Kirkland_Manholes-2175	133.14	Kirkland_Manholes-2174	132.67	117.8	0.4	8	PVC	0.01	446	1	8	9	2.1		
Kirkland_Main-1165	Kirkland_Manholes-2174	132.67	Kirkland_Manholes-2173	131.99	11.1	6.13	8	PVC	0.01	1,745	2	16	18	1.1		
Kirkland_Main-1166	Kirkland_Manholes-2173	131.99	Kirkland_Manholes-2172	130.6	348.2	0.4	8	PVC	0.01	446	23	25	47	10.6	SM14-Ex-EX192	Drop Connection
Kirkland_Main-1167	Kirkland_Manholes-2172	107.91	Kirkland_Manholes-2163	75.42	383.7	8.47	8	PVC	0.01	2,052	24	33	57	2.8	SM14-Ex-EX192	
Kirkland_Main-1168	Kirkland_Manholes-2163	75.42	Kirkland_Manholes-2141	73.53	47.4	3.99	8	PVC	0.01	1,408	24	41	66	4.7		
Kirkland_Main-1169	Kirkland_Manholes-2183	146.45	Kirkland_Manholes-2182	136.23	145.7	7.02	8	PVC	0.01	1,868	0	8	9	0.5		
Kirkland_Main-1170	Kirkland_Manholes-2182	136.23	Kirkland_Manholes-2181	133.52	88.2	3.07	8	PVC	0.01	1,236	0	16	17	1.4		
Kirkland_Main-1171	Kirkland_Manholes-2181	133.52	Kirkland_Manholes-2180	125.44	163.5	4.94	8	PVC	0.01	1,567	1	25	26	1.6		
Kirkland_Main-1172	Kirkland_Manholes-2180	125.44	Kirkland_Manholes-2179	120.67	330.4	1.44	8	PVC	0.01	847	3	33	36	4.3		
Kirkland_Main-1173	Kirkland_Manholes-2179	120.67	Kirkland_Manholes-2178	102.28	199.5	9.22	8	PVC	0.01	2,140	5	41	47	2.2		
Kirkland_Main-1174	Kirkland_Manholes-2178	102.28	Kirkland_Manholes-2177	75.93	214.6	12.28	8	PVC	0.01	2,471	6	49	55	2.2		
Kirkland_Main-1175	Kirkland_Manholes-2177	75.93	Kirkland_Manholes-2176	70.83	149.4	3.41	8	PVC	0.01	1,303	6	58	64	4.9		
Kirkland_Main-1176	Kirkland_Manholes-2176	70.83	Kirkland_Manholes-2142	68.99	36.2	5.08	8	PVC	0.01	1,589	6	66	72	4.5		
Kirkland_Main-1177	Kirkland_Manholes-2366	292.68	Kirkland_Manholes-2365	289.93	42.5	6.47	8	PVC	0.01	1,794	24	79	103	5.8	SM14-Ex-EX260	
Kirkland_Main-1178	Kirkland_Manholes-2368	290.87	Kirkland_Manholes-2365	289.93	48.6	1.94	8	PVC	0.01	981	1	4	5	0.5		
Kirkland_Main-1179	Kirkland_Manholes-2372	304.48	Kirkland_Manholes-2371	291.2	253.9	5.23	8	PVC	0.01	1,613	14	44	57	3.6	SM14-Ex-EX257	
Kirkland_Main-1180	Kirkland_Manholes-2378	312.05	Kirkland_Manholes-2372	304.48	224.1	3.38	8	PVC	0.01	1,296	10	24	34	2.6	SM14-Ex-EX257	
Kirkland_Main-1181	Kirkland_Manholes-2373	306.85	Kirkland_Manholes-2372	304.48	403.1	0.59	8	PVC	0.01	541	2	8	10	1.9	SM14-Ex-EX258	
Kirkland_Main-1182	Kirkland_Manholes-2374	307.1	Kirkland_Manholes-2373	306.85	109.8	0.23	8	PVC	0.01	336	1	4	5	1.5	SM14-Ex-EX258	
Kirkland_Main-1183	Kirkland_Manholes-2376	359.31	Kirkland_Manholes-2375	323.76	368.2	9.66	8	PVC	0.01	2,191	4	4	8	0.4	SM14-Ex-EX259	
Kirkland_Main-1184	Kirkland_Manholes-2375	323.76	Kirkland_Manholes-2377	320.51	173.5	1.87	8	PVC	0.01	965	6	8	14	1.4	SM14-Ex-EX259	
Kirkland_Main-1185	Kirkland_Manholes-2377	320.51	Kirkland_Manholes-2378	312.05	352.3	2.4	8	PVC	0.01	1,093	8	12	20	1.8	SM14-Ex-EX259	
Kirkland_Main-1186	Kirkland_Manholes-2379	312.61	Kirkland_Manholes-2378	312.05	23.8	2.35	8	PVC	0.01	1,081	2	8	10	0.9	SM14-Ex-EX257	

Existing with Proposed Improvements - Peak Hour Flow - Pipe Capacity Table

Label	Upstream Node	Upstream Invert Elevation (ft)	Downstream Node	Downstream Invert Elevation (ft)	Length (ft)	Slope (%)	Diameter (in)	Material	Manning's n	Design Capacity (gpm)	Domestic Flow (gpm)	I/I Flow (gpm)	Total Flow (gpm)	Percent Full (%)	CIP No.	Notes
Kirkland_Main-1187	Kirkland_Manholes-2380	290.72	Kirkland_Manholes-2430	273.69	397.1	4.29	8	PVC	0.01	1,460	2	8	10	0.7	SM14-Ex-EX286	
Kirkland_Main-1188	Kirkland_Manholes-2381	293.12	Kirkland_Manholes-2380	290.72	144.3	1.66	8	PVC	0.01	909	1	4	5	0.6	SM14-Ex-EX286	
Kirkland_Main-1189	Kirkland_Manholes-2385	343.75	Kirkland_Manholes-2383	328.5	173.4	8.79	8	PVC	0.01	2,091	8	24	32	1.5	SM14-Ex-EX260	
Kirkland_Main-1190	Kirkland_Manholes-2384	330.79	Kirkland_Manholes-2383	328.5	64.4	3.56	8	PVC	0.01	1,330	10	32	42	3.1	SM14-Ex-EX287	
Kirkland_Main-1191	Kirkland_Manholes-2395	331.59	Kirkland_Manholes-2384	330.79	136.8	0.58	8	PVC	0.01	539	9	28	37	6.9	SM14-Ex-EX287	
Kirkland_Main-1192	Kirkland_Manholes-2386	373.02	Kirkland_Manholes-2385	343.75	310.7	9.42	8	PVC	0.01	2,164	7	20	27	1.2	SM14-Ex-EX260	
Kirkland_Main-1193	Kirkland_Manholes-2387	380.46	Kirkland_Manholes-2386	373.02	399.9	1.86	8	PVC	0.01	962	6	16	21	2.2	SM14-Ex-EX260	
Kirkland_Main-1194	Kirkland_Manholes-2388	388.18	Kirkland_Manholes-2387	380.46	279.2	2.76	8	PVC	0.01	1,172	4	12	16	1.3	SM14-Ex-EX260	
Kirkland_Main-1195	Kirkland_Manholes-2533	389.33	Kirkland_Manholes-2388	388.18	396.1	0.29	8	PVC	0.01	380	2	8	10	2.6	SM14-Ex-EX260	
Kirkland_Main-1196	Kirkland_Manholes-2389	365.8	Kirkland_Manholes-2390	359.58	183.8	3.38	8	PVC	0.01	1,297	2	4	6	0.5	SM14-Ex-EX287	
Kirkland_Main-1197	Kirkland_Manholes-2390	359.58	Kirkland_Manholes-2391	347.6	291	4.12	8	PVC	0.01	1,430	4	8	12	0.9	SM14-Ex-EX287	
Kirkland_Main-1198	Kirkland_Manholes-2391	347.6	Kirkland_Manholes-2392	345.7	123.7	1.54	8	PVC	0.01	874	6	12	18	2.1	SM14-Ex-EX287	
Kirkland_Main-1199	Kirkland_Manholes-2392	345.7	Kirkland_Manholes-2393	339.78	135.6	4.36	8	PVC	0.01	1,473	7	16	23	1.5	SM14-Ex-EX287	
Kirkland_Main-1200	Kirkland_Manholes-2411	259.15	Kirkland_Manholes-2413	251.1	165.8	4.86	8	PVC	0.01	1,554	26	79	106	6.8		
Kirkland_Main-1201	Kirkland_Manholes-2419	203.52	Kirkland_Manholes-2303	195.57	329.3	2.41	12	PVC	0.01	3,230	295	580	876	27.1	SM2	
Kirkland_Main-1202	Kirkland_Manholes-2418	218.73	Kirkland_Manholes-2419	203.52	222.4	6.84	12	PVC	0.01	5,436	287	576	863	15.9	SM2	
Kirkland_Main-1203	Kirkland_Manholes-2417	230.48	Kirkland_Manholes-2418	218.73	175.2	6.71	12	PVC	0.01	5,384	246	421	667	12.4	SM2	
Kirkland_Main-1204	Kirkland_Manholes-2416	242.81	Kirkland_Manholes-2417	230.48	262.7	4.69	12	PVC	0.01	4,503	244	417	661	14.7	SM2	
Kirkland_Main-1205	Kirkland_Manholes-2420	230.11	Kirkland_Manholes-2418	218.73	227.2	5.01	8	PVC	0.01	1,578	41	151	192	12.1	SM14-Ex-EX251	
Kirkland_Main-1206	Kirkland_Manholes-2415	247.52	Kirkland_Manholes-2416	242.81	265.9	1.77	12	PVC	0.01	2,766	241	413	655	23.7	SM2	
Kirkland_Main-1207	Kirkland_Manholes-2720	32.22	Kirkland_Manholes-2719	31.99	57.5	0.4	8	PVC	0.01	446	74	6	80	17.9		
Kirkland_Main-1208	Kirkland_Manholes-2414	248.96	Kirkland_Manholes-2415	247.52	131.3	1.1	12	PVC	0.01	2,177	240	409	650	29.8	SM2	
Kirkland_Main-1209	Kirkland_Manholes-2413	251.1	Kirkland_Manholes-2414	248.96	118.1	1.81	12	PVC	0.01	2,798	240	405	645	23.1	SM2	
Kirkland_Main-1210	Kirkland_Manholes-2421	253.02	Kirkland_Manholes-2413	251.1	118.9	1.61	12	PVC	0.01	2,641	213	322	535	20.3	SM2	
Kirkland_Main-1211	Kirkland_Manholes-2422	254.09	Kirkland_Manholes-2421	253.02	92.9	1.15	12	PVC	0.01	2,230	210	314	524	23.5	SM2	
Kirkland_Main-1212	Kirkland_Manholes-2424	257.66	Kirkland_Manholes-2422	254.09	323.2	1.1	12	PVC	0.01	2,185	209	310	519	23.8	SM2	
Kirkland_Main-1213	Kirkland_Manholes-2879	68.04	Kirkland_Manholes-2492	55.46	56.8	22.14	8	PVC	0.01	3,317	24	43	67	2		
Kirkland_Main-1214	Kirkland_Manholes-2091	57.76	Kirkland_Manholes-2090	57.52	58.9	0.4	8	PVC	0.01	446	2	12	14	3.2	SM14-Ex-EX279	Drop Connection
Kirkland_Main-1215	Kirkland_Manholes-2094	57.58	Kirkland_Manholes-2090	57.44	314.4	0.04	15	PVC	0.01	795	80	237	317	39.9	SM14-Ex-EX222	
Kirkland_Main-1216	Kirkland_Manholes-2092	79.95	Kirkland_Manholes-2091	79.51	110.7	0.4	8	PVC	0.01	446	2	6	8	1.8	SM14-Ex-EX279	Drop Connection
Kirkland_Main-1218	Kirkland_Manholes-2095	60.47	Kirkland_Manholes-2094	57.58	55.7	5.18	8	PVC	0.01	1,605	2	12	14	0.9	SM14-Ex-EX277	
Kirkland_Main-1219	Kirkland_Manholes-2096	71.29	Kirkland_Manholes-2095	60.47	119	9.09	8	PVC	0.01	2,126	2	6	8	0.4	SM14-Ex-EX277	
Kirkland_Main-1220	Kirkland_Manholes-2099	57.72	Kirkland_Manholes-2094	57.58	259	0.05	12	PVC	0.01	483	78	219	296	61.3	SM14-Ex-EX222	
Kirkland_Main-1223	Kirkland_Manholes-2614	304.78	Kirkland_Manholes-2615	302.07	237.1	1.14	8	PVC	0.01	754	37	103	141	18.6	SM14-Ex-EX299	
Kirkland_Main-1224	Kirkland_Manholes-2615	302.07	Kirkland_Manholes-2618	301.8	67.7	0.4	8	PVC	0.01	446	37	107	145	32.4	SM14-Ex-EX299	Drop Connection
Kirkland_Main-1225	Kirkland_Manholes-2618	278.4	Kirkland_Manholes-2617	276.43	274.1	0.72	8	PVC	0.01	598	42	119	161	27	SM2	
Kirkland_Main-1226	Kirkland_Manholes-2617	276.43	Kirkland_Manholes-2616	275.44	246.8	0.4	8	PVC	0.01	446	58	123	181	40.7	SM2	Drop Connection
Kirkland_Main-1227	Kirkland_Manholes-2616	274.02	Kirkland_Manholes-2619	272.54	173.9	0.85	8	PVC	0.01	650	119	151	270	41.5	SM2	
Kirkland_Main-1228	Kirkland_Manholes-2619	272.54	Kirkland_Manholes-2428	270.37	122.7	1.77	8	PVC	0.01	937	119	155	274	29.2	SM2	
Kirkland_Main-1229	Kirkland_Manholes-407	266.31	Kirkland_Manholes-409	264.84	123.1	1.19	8	PVC	0.01	771	2	8	10	1.3		
Kirkland_Main-1230	Kirkland_Manholes-409	264.84	Kirkland_Manholes-419	263.82	78.4	1.3	8	PVC	0.01	804	3	16	19	2.4		
Kirkland_Main-1231	Kirkland_Manholes-411	265.96	Kirkland_Manholes-412	253.7	218.8	5.6	8	PVC	0.01	1,669	1	4	5	0.3		
Kirkland_Main-1232	Kirkland_Manholes-412	253.7	Kirkland_Manholes-413	252.76	178.3	0.53	8	PVC	0.01	512	2	8	10	1.9		
Kirkland_Main-1233	Kirkland_Manholes-413	252.76	Kirkland_Manholes-414	251.5	46.6	2.7	8	PVC	0.01	1,159	3	12	15	1.3		
Kirkland_Main-1234	Kirkland_Manholes-414	251.5	Kirkland_Manholes-415	250.52	65.4	1.5	8	PVC	0.01	863	3	16	19	2.1		
Kirkland_Main-1235	Kirkland_Manholes-415	250.52	Kirkland_Manholes-416	248.58	58.4	3.32	8	PVC	0.01	1,285	3	20	23	1.8		
Kirkland_Main-1236	Kirkland_Manholes-416	248.58	Kirkland_Manholes-417	237.12	157.3	7.28	8	PVC	0.01	1,903	4	24	28	1.5		
Kirkland_Main-1237	Kirkland_Manholes-417	237.12	Kirkland_Manholes-2767	236.02	47.6	2.31	8	PVC	0.01	1,071	5	28	32	3		
Kirkland_Main-1238	Kirkland_Manholes-2767	236.02	Kirkland_Manholes-418	235.93	86.7	0.1	8	PVC	0.01	227	5	32	36	16		
Kirkland_Main-1239	Kirkland_Manholes-408	267.9	Kirkland_Manholes-407	266.31	113.3	1.4	8	PVC	0.01	835	1	4	5	0.6		
Kirkland_Main-1240	Kirkland_Manholes-419	263.82	Kirkland_Manholes-625	258	200	2.91	8	PVC	0.01	1,203	4	20	24	2		
Kirkland_Main-1241	Kirkland_Manholes-420	281.46	Kirkland_Manholes-1071	277.81	358.8	1.02	8	PVC	0.01	711	7	36	43	6.1		
Kirkland_Main-1242	Kirkland_Manholes-418	235.93	Kirkland_Manholes-421	235.77	9.8	1.63	8	PVC	0.01	901	5	36	40	4.5		
Kirkland_Main-1243	Kirkland_Manholes-422	235.64	Kirkland_Manholes-341	235.59	30.3	0.17	8	PVC	0.01	287	5	44	49	17	SM14-Ex-EX49	
Kirkland_Main-1244	Kirkland_Manholes-421	235.77	Kirkland_Manholes-422	235.64	135.2	0.1	8	PVC	0.01	219	5	40	45	20.5	SM14-Ex-EX49	
Kirkland_Main-1245	Kirkland_Manholes-423	284.5	Kirkland_Manholes-420	281.46	237.1	1.28	8	PVC	0.01	798	1	4	5	0.6		
Kirkland_Main-1246	Kirkland_Manholes-424	292.81	Kirkland_Manholes-425	290.3	45.2	5.56	8	PVC	0.01	1,662	5	24	29	1.8		
Kirkland_Main-1247	Kirkland_Manholes-1846	15.1	Kirkland_Manholes-1845	14.95	208.8	0.07	12	PVC	0.01	557	5	32	38	6.8	SM10	
Kirkland_Main-1248	Kirkland_Manholes-1845	14.95	Kirkland_Manholes-1844	14.08	225.8	0.39	12	PVC	0.01	1,290	6	39	45	3.5	SM10	
Kirkland_Main-1249	Kirkland_Manholes-1844	14.08	Kirkland_Manholes-1843	13.9	253.8	0.07	12	PVC	0.01	554	8	45	53	9.6	SM10	
Kirkland_Main-1250	Kirkland_Manholes-1843	13.9	Kirkland_Manholes-1842	13.84	237.6	0.03	12	PVC	0.01	330	8	52	60	18.1	SM10	
Kirkland_Main-1251	Kirkland_Manholes-1842	13.84	Kirkland_Manholes-1841	13.3	228.3	0.24	12	PVC	0.01	1,011	9	58	67	6.7	SM10	

Existing with Proposed Improvements - Peak Hour Flow - Pipe Capacity Table

Label	Upstream Node	Upstream Invert Elevation (ft)	Downstream Node	Downstream Invert Elevation (ft)	Length (ft)	Slope (%)	Diameter (in)	Material	Manning's n	Design Capacity (gpm)	Domestic Flow (gpm)	I/I Flow (gpm)	Total Flow (gpm)	Percent Full (%)	CIP No.	Notes
Kirkland_Main-1252	Kirkland_Manholes-1840	12.98	Kirkland_Manholes-1839	12.1	208.1	0.42	12	PVC	0.01	1,352	14	71	86	6.4	SM10	
Kirkland_Main-1253	Kirkland_Manholes-1839	12.1	Kirkland_Manholes-1838	12	159.4	0.06	12	PVC	0.01	521	14	78	92	17.7		
Kirkland_Main-1254	Kirkland_Manholes-1838	12	Kirkland_Manholes-1834	11.35	218.3	0.3	12	PVC	0.01	1,134	16	84	100	8.8		
Kirkland_Main-1255	Kirkland_Manholes-1841	13.3	Kirkland_Manholes-1840	12.98	311	0.1	12	PVC	0.01	667	10	65	75	11.2	SM10	
Kirkland_Main-1256	Kirkland_Manholes-1854	359.04	Kirkland_Manholes-1855	357.41	200.3	0.81	8	PVC	0.01	636	0	4	4	0.6		
Kirkland_Main-1257	Kirkland_Manholes-1855	357.41	Kirkland_Manholes-1856	346.8	232	4.57	8	PVC	0.01	1,508	0	8	8	0.5		
Kirkland_Main-1258	Kirkland_Manholes-1856	346.8	Kirkland_Manholes-1857	344.14	121.8	2.18	8	PVC	0.01	1,042	6	12	18	1.7		
Kirkland_Main-1259	Kirkland_Manholes-1857	344.14	Kirkland_Manholes-1858	335.71	162.8	5.18	8	PVC	0.01	1,605	6	16	22	1.4		
Kirkland_Main-1260	Kirkland_Manholes-1858	335.71	Kirkland_Manholes-1859	326.96	255.9	3.42	8	PVC	0.01	1,304	62	115	178	13.6		
Kirkland_Main-1261	Kirkland_Manholes-1963	340.77	Kirkland_Manholes-1858	335.71	100.1	5.06	8	PVC	0.01	1,585	53	95	149	9.4		
Kirkland_Main-1262	Kirkland_Manholes-1859	326.96	Kirkland_Manholes-1860	317.11	345	2.85	8	PVC	0.01	1,191	62	119	182	15.2		
Kirkland_Main-1263	Kirkland_Manholes-1860	317.11	Kirkland_Manholes-1861	303.96	398.6	3.3	8	PVC	0.01	1,281	63	123	186	14.5		
Kirkland_Main-1264	Kirkland_Manholes-1861	303.96	Kirkland_Manholes-1862	294.2	372.7	2.62	8	PVC	0.01	1,141	63	127	190	16.6		Drop Connection
Kirkland_Main-1265	Kirkland_Manholes-2394	354.21	Kirkland_Manholes-2393	339.78	142.1	10.15	8	PVC	0.01	2,247	1	4	5	0.2	SM14-Ex-EX287	
Kirkland_Main-1266	Kirkland_Manholes-2393	339.78	Kirkland_Manholes-2395	331.59	110.8	7.39	8	PVC	0.01	1,917	9	24	32	1.7	SM14-Ex-EX287	
Kirkland_Main-1267	Kirkland_Manholes-2405	418	Kirkland_Manholes-2397	417.95	35.5	0.14	8	PVC	0.01	265	5	28	33	12.5		
Kirkland_Main-1268	Kirkland_Manholes-2397	417.95	Kirkland_Manholes-2398	416.84	162.8	0.68	8	PVC	0.01	582	6	32	38	6.5	SM14-Ex-EX261	
Kirkland_Main-1269	Kirkland_Manholes-2404	419.23	Kirkland_Manholes-2405	418	199.9	0.62	8	PVC	0.01	553	4	24	28	5		
Kirkland_Main-1270	Kirkland_Manholes-2399	419.47	Kirkland_Manholes-2404	419.23	32.8	0.73	8	PVC	0.01	603	1	8	9	1.4		
Kirkland_Main-1271	Kirkland_Manholes-2403	420.2	Kirkland_Manholes-2404	419.23	274.8	0.35	8	PVC	0.01	419	3	12	15	3.5		
Kirkland_Main-1272	Kirkland_Manholes-2400	420.6	Kirkland_Manholes-2399	419.47	159	0.71	8	PVC	0.01	594	1	4	5	0.8		
Kirkland_Main-1273	Kirkland_Manholes-2402	421.38	Kirkland_Manholes-2403	420.2	252.3	0.47	8	PVC	0.01	482	2	8	10	2		
Kirkland_Main-1274	Kirkland_Manholes-2401	422.6	Kirkland_Manholes-2402	421.38	262.8	0.46	8	PVC	0.01	480	1	4	5	1.1		
Kirkland_Main-1276	Kirkland_Manholes-2398	416.84	Kirkland_Manholes-2406	412.88	316.7	1.25	8	PVC	0.01	788	7	36	43	5.5	SM14-Ex-EX261	
Kirkland_Main-1277	Kirkland_Manholes-2406	412.88	Kirkland_Manholes-2396	406.38	222.1	2.93	8	PVC	0.01	1,206	9	40	49	4.1	SM14-Ex-EX261	
Kirkland_Main-1278	Kirkland_Manholes-2396	406.38	Kirkland_Manholes-2407	403.31	84.2	3.65	8	PVC	0.01	1,346	10	44	54	4	SM14-Ex-EX261	
Kirkland_Main-1279	Kirkland_Manholes-2408	405.44	Kirkland_Manholes-2409	401.93	26.6	13.2	8	PVC	0.01	2,561	0	8	8	0.3		
Kirkland_Main-1281	Kirkland_Manholes-2409	401.93	Kirkland_Manholes-2267	393.07	194.4	4.56	8	PVC	0.01	1,505	0	12	12	0.8		
Kirkland_Main-1282	Kirkland_Manholes-2412	260.78	Kirkland_Manholes-2411	259.15	122.6	1.33	8	PVC	0.01	813	6	12	18	2.2		
Kirkland_Main-1283	Kirkland_Manholes-282	50.07	Kirkland_Manholes-281	36.84	240.3	5.51	8	PVC	0.01	1,654	1	10	11	0.7	SM10	
Kirkland_Main-1284	Kirkland_Manholes-284	50.6	Kirkland_Manholes-282	50.07	132.8	0.4	8	PVC	0.01	446	0	3	3	0.7		
Kirkland_Main-1285	Kirkland_Manholes-283	64.31	Kirkland_Manholes-282	50.07	115.4	12.34	8	PVC	0.01	2,477	1	3	5	0.2	SM10	
Kirkland_Main-1286	Kirkland_Manholes-273	69.52	Kirkland_Manholes-247	65.14	92.5	4.74	8	PVC	0.01	1,534	50	139	188	12.3	SM10	
Kirkland_Main-1290	Kirkland_Manholes-274	93.7	Kirkland_Manholes-271	91.78	250.2	0.77	8	PVC	0.01	618	36	96	132	21.3	SM10	
Kirkland_Main-1292	Kirkland_Manholes-277	72.24	Kirkland_Manholes-278	56.62	141.8	11.02	8	PVC	0.01	2,340	2	3	6	0.2	SM10	
Kirkland_Main-1293	Kirkland_Manholes-278	56.62	Kirkland_Manholes-280	27.37	245.1	11.93	8	PVC	0.01	2,436	31	13	44	1.8	SM10	
Kirkland_Main-1294	Kirkland_Manholes-276	92.16	Kirkland_Manholes-299	66.63	263.6	9.68	8	PVC	0.01	2,194	2	6	9	0.4	SM10	
Kirkland_Main-1295	Kirkland_Manholes-267	95.34	Kirkland_Manholes-275	94.08	184.4	0.68	8	PVC	0.01	583	34	87	121	20.8	SM10	
Kirkland_Main-1296	Kirkland_Manholes-275	94.08	Kirkland_Manholes-274	93.7	61.9	0.61	8	PVC	0.01	553	34	92	126	22.8	SM10	
Kirkland_Main-1297	Kirkland_Manholes-270	94.47	Kirkland_Manholes-271	91.78	344.2	0.78	8	PVC	0.01	623	10	30	40	6.4	SM10	
Kirkland_Main-1298	Kirkland_Manholes-269	103.08	Kirkland_Manholes-270	94.47	190.8	4.51	8	PVC	0.01	1,498	7	26	32	2.2	SM10	
Kirkland_Main-1299	Kirkland_Manholes-268	108.82	Kirkland_Manholes-269	103.08	133.1	4.31	8	PVC	0.01	1,464	5	21	26	1.8	SM10	
Kirkland_Main-1300	Kirkland_Manholes-2521	363.83	Kirkland_Manholes-2525	348.63	167.1	9.09	8	PVC	0.01	2,126	2	5	7	0.3		
Kirkland_Main-1301	Kirkland_Manholes-2519	384.75	Kirkland_Manholes-2522	362.4	159.7	13.99	8	PVC	0.01	2,637	2	2	4	0.1		
Kirkland_Main-1302	Kirkland_Manholes-2522	362.4	Kirkland_Manholes-2523	357.31	64.3	7.92	8	PVC	0.01	1,984	2	5	7	0.3		
Kirkland_Main-1303	Kirkland_Manholes-2523	357.31	Kirkland_Manholes-2524	346.56	113.2	9.5	8	PVC	0.01	2,173	3	7	10	0.5		
Kirkland_Main-1304	Kirkland_Manholes-2524	346.56	Kirkland_Manholes-2527	340.94	187	3.01	8	PVC	0.01	1,222	22	30	52	4.3		
Kirkland_Main-1305	Kirkland_Manholes-2526	336.85	Kirkland_Manholes-2776	334.45	375.1	0.64	8	PVC	0.01	564	29	79	108	19.1		
Kirkland_Main-1306	Kirkland_Manholes-2527	340.94	Kirkland_Manholes-2526	336.85	509.8	0.8	8	PVC	0.01	631	29	77	105	16.7		
Kirkland_Main-1307	Kirkland_Manholes-2525	348.63	Kirkland_Manholes-2527	340.94	406	1.89	8	PVC	0.01	970	7	44	51	5.3		
Kirkland_Main-1308	Kirkland_Manholes-2528	359.11	Kirkland_Manholes-2525	348.63	235.4	4.45	8	PVC	0.01	1,488	4	37	41	2.8		
Kirkland_Main-1309	Kirkland_Manholes-2529	365.07	Kirkland_Manholes-2528	362.98	40.4	5.17	8	PVC	0.01	1,604	3	35	38	2.4		Drop Connection
Kirkland_Main-1310	Kirkland_Manholes-2531	381.45	Kirkland_Manholes-2529	365.07	303.2	5.4	8	PVC	0.01	1,639	3	33	36	2.2		
Kirkland_Main-1311	Kirkland_Manholes-2530	382.12	Kirkland_Manholes-2531	381.45	45.8	1.46	8	PVC	0.01	853	3	30	34	3.9		
Kirkland_Main-1312	Kirkland_Manholes-2532	395.91	Kirkland_Manholes-2530	382.12	311	4.43	8	PVC	0.01	1,485	2	28	30	2		
Kirkland_Main-1313	Kirkland_Manholes-2534	391.7	Kirkland_Manholes-2533	389.33	214.8	1.1	8	PVC	0.01	741	1	4	5	0.7	SM14-Ex-EX260	
Kirkland_Main-1315	Kirkland_Manholes-2535	407.5	Kirkland_Manholes-2536	406.16	143.7	0.93	8	PVC	0.01	681	13	4	17	2.4		
Kirkland_Main-1316	Kirkland_Manholes-2536	406.16	Kirkland_Manholes-2537	404.02	173.1	1.24	8	PVC	0.01	784	17	8	25	3.2		
Kirkland_Main-1317	Kirkland_Manholes-2537	404.02	Kirkland_Manholes-2538	403.64	31.1	1.22	8	PVC	0.01	780	17	12	29	3.7		
Kirkland_Main-1318	Kirkland_Manholes-2541	412.62	Kirkland_Manholes-2538	403.64	249.5	3.6	8	PVC	0.01	1,338	5	12	16	1.2	SM14-Ex-EX299	
Kirkland_Main-1320	Kirkland_Manholes-2538	403.64	Kirkland_Manholes-2542	402.84	199.8	0.4	8	PVC	0.01	446	22	28	50	11.3	SM14-Ex-EX299	
Kirkland_Main-1321	Kirkland_Manholes-2539	420.17	Kirkland_Manholes-2540	419.4	116.4	0.66	8	PVC	0.01	574	2	4	6	1	SM14-Ex-EX299	

Existing with Proposed Improvements - Peak Hour Flow - Pipe Capacity Table

Label	Upstream Node	Upstream Invert Elevation (ft)	Downstream Node	Downstream Invert Elevation (ft)	Length (ft)	Slope (%)	Diameter (in)	Material	Manning's n	Design Capacity (gpm)	Domestic Flow (gpm)	I/I Flow (gpm)	Total Flow (gpm)	Percent Full (%)	CIP No.	Notes
Kirkland_Main-1322	Kirkland_Manholes-2540	419.4	Kirkland_Manholes-2541	412.62	255.5	2.65	8	PVC	0.01	1,149	3	8	11	1	SM14-Ex-EX299	
Kirkland_Main-1324	Kirkland_Manholes-2542	402.84	Kirkland_Manholes-2547	388.67	366.3	3.87	8	PVC	0.01	1,387	24	32	55	4	SM14-Ex-EX299	
Kirkland_Main-1325	Kirkland_Manholes-2547	388.67	Kirkland_Manholes-2549	373.53	148.8	10.17	8	PVC	0.01	2,249	25	36	60	2.7	SM14-Ex-EX299	
Kirkland_Main-1327	Kirkland_Manholes-2543	398.38	Kirkland_Manholes-2545	394.25	263.6	1.57	8	PVC	0.01	883	3	8	10	1.2		
Kirkland_Main-1328	Kirkland_Manholes-2544	407.5	Kirkland_Manholes-2543	398.38	295.7	3.08	8	PVC	0.01	1,238	2	4	6	0.5	SM14-Ex-EX308	
Kirkland_Main-1329	Kirkland_Manholes-2546	394.6	Kirkland_Manholes-2545	394.25	207.1	0.17	8	PVC	0.01	290	0	4	4	1.5		
Kirkland_Main-1330	Kirkland_Manholes-2545	394.25	Kirkland_Manholes-2548	359.75	323.6	10.66	8	PVC	0.01	2,302	6	16	22	1		
Kirkland_Main-1331	Kirkland_Manholes-2549	373.53	Kirkland_Manholes-2550	363.01	106.8	9.85	8	PVC	0.01	2,213	25	40	64	2.9	SM14-Ex-EX299	
Kirkland_Main-1332	Kirkland_Manholes-2550	363.01	Kirkland_Manholes-2551	350.96	184.1	6.54	8	PVC	0.01	1,804	25	44	69	3.8	SM14-Ex-EX299	
Kirkland_Main-1333	Kirkland_Manholes-2551	350.96	Kirkland_Manholes-2552	332.83	142.8	12.69	8	PVC	0.01	2,512	36	83	120	4.8	SM14-Ex-EX299	
Kirkland_Main-1334	Kirkland_Manholes-2552	332.83	Kirkland_Manholes-2559	326.46	239.1	2.66	8	PVC	0.01	1,151	37	95	133	11.5	SM14-Ex-EX299	
Kirkland_Main-1335	Kirkland_Manholes-2555	336.08	Kirkland_Manholes-2552	332.83	311.9	1.04	8	PVC	0.01	720	1	8	9	1.3	SM14-Ex-EX322	
Kirkland_Main-1336	Kirkland_Manholes-2553	338.58	Kirkland_Manholes-2554	334.68	146	2.67	8	PVC	0.01	1,152	1	4	5	0.4	SM14-Ex-EX304	
Kirkland_Main-1337	Kirkland_Manholes-2892	130.3	Kirkland_Manholes-7	127.07	138.9	2.32	8	PVC	0.01	1,075	1	1	3	0.2		
Kirkland_Main-1338	Kirkland_Manholes-2554	334.68	Kirkland_Manholes-2558	329.23	295.9	1.84	8	PVC	0.01	957	6	8	14	1.4	SM14-Ex-EX304	
Kirkland_Main-1339	Kirkland_Manholes-2556	339.44	Kirkland_Manholes-2555	336.08	338.5	0.99	8	PVC	0.01	702	1	4	5	0.7	SM14-Ex-EX322	
Kirkland_Main-1340	Kirkland_Manholes-2557	338.97	Kirkland_Manholes-2564	326.24	273.9	4.65	8	PVC	0.01	1,520	0	4	4	0.3	SM14-Ex-EX303	
Kirkland_Main-1341	Kirkland_Manholes-2558	329.23	Kirkland_Manholes-2562	315.88	275	4.86	8	PVC	0.01	1,554	6	12	18	1.2	SM14-Ex-EX304	
Kirkland_Main-1342	Kirkland_Manholes-2559	326.46	Kirkland_Manholes-2614	304.78	296.2	7.32	8	PVC	0.01	1,907	37	99	137	7.2	SM14-Ex-EX299	
Kirkland_Main-1343	Kirkland_Manholes-2561	358.82	Kirkland_Manholes-2551	350.96	208.8	3.76	8	PVC	0.01	1,368	11	36	47	3.4		
Kirkland_Main-1344	Kirkland_Manholes-2560	366.92	Kirkland_Manholes-2561	358.82	174.3	4.65	8	PVC	0.01	1,520	1	4	5	0.4		
Kirkland_Main-1345	Kirkland_Manholes-2562	315.88	Kirkland_Manholes-2563	304.66	203.7	5.51	8	PVC	0.01	1,655	7	16	23	1.4	SM14-Ex-EX304	
Kirkland_Main-1346	Kirkland_Manholes-2563	304.66	Kirkland_Manholes-2603	296.02	227.1	3.81	8	PVC	0.01	1,375	9	20	29	2.1	SM14-Ex-EX304	
Kirkland_Main-1347	Kirkland_Manholes-2564	326.24	Kirkland_Manholes-2565	315.02	180.1	6.23	8	PVC	0.01	1,760	1	8	9	0.5	SM14-Ex-EX303	
Kirkland_Main-1349	Kirkland_Manholes-2565	315.02	Kirkland_Manholes-2590	303.32	215.8	5.42	8	PVC	0.01	1,642	7	40	47	2.9	SM14-Ex-EX303	
Kirkland_Main-1350	Kirkland_Manholes-2567	316.05	Kirkland_Manholes-2565	315.02	200.2	0.51	8	PVC	0.01	506	5	28	33	6.5	SM14-Ex-EX307	
Kirkland_Main-1353	Kirkland_Manholes-2456	21.67	Kirkland_Manholes-2458	21.12	286.3	0.19	12	PVC	0.01	911	46	110	156	17.1		
Kirkland_Main-1354	Kirkland_Manholes-2104	41.29	Kirkland_Manholes-2457	40.34	237.1	0.4	8	PVC	0.01	446	6	13	19	4.4	SM14-Ex-EX231	Drop Connection
Kirkland_Main-1355	Kirkland_Manholes-2459	25.23	Kirkland_Manholes-2458	21.12	57.9	7.1	8	PVC	0.01	1,879	0	13	13	0.7		
Kirkland_Main-1356	Kirkland_Manholes-2458	21.12	Kirkland_Manholes-2460	20.42	280.8	0.25	12	PVC	0.01	1,038	56	130	186	17.9		
Kirkland_Main-1357	Kirkland_Manholes-2105	41.32	Kirkland_Manholes-2459	40.36	240.6	0.4	8	PVC	0.01	446	0	6	7	1.5	SM14-Ex-EX230	Drop Connection
Kirkland_Main-1358	Kirkland_Manholes-2460	20.42	Kirkland_Manholes-2463	19.08	286.9	0.47	12	PVC	0.01	1,421	72	162	234	16.5		
Kirkland_Main-1359	Kirkland_Manholes-2461	23.27	Kirkland_Manholes-2460	20.42	36.9	7.72	8	PVC	0.01	1,959	8	19	27	1.4		
Kirkland_Main-1360	Kirkland_Manholes-2106	63.43	Kirkland_Manholes-2461	62.02	352	0.4	8	PVC	0.01	446	6	13	19	4.2	SM14-Ex-EX227	Drop Connection
Kirkland_Main-1361	Kirkland_Manholes-2462	20.98	Kirkland_Manholes-2460	20.42	12.7	4.42	8	PVC	0.01	1,483	8	6	15	1		
Kirkland_Main-1362	Kirkland_Manholes-2463	19.08	Kirkland_Manholes-2465	18.4	238.2	0.29	15	PVC	0.01	2,014	82	169	251	12.5		
Kirkland_Main-1363	Kirkland_Manholes-2464	24.34	Kirkland_Manholes-2465	24.15	46.3	0.4	8	PVC	0.01	446	12	32	45	10.1		Drop Connection
Kirkland_Main-1364	Kirkland_Manholes-2465	18.4	Kirkland_Manholes-2321	18.2	405.1	0.05	15	PVC	0.01	837	95	208	303	36.2		
Kirkland_Main-1365	Kirkland_Manholes-2466	40.06	Kirkland_Manholes-2464	24.34	133.9	11.74	8	PVC	0.01	2,416	12	26	38	1.6		
Kirkland_Main-1366	Kirkland_Manholes-754	246.56	Kirkland_Manholes-756	236.14	59.1	17.63	8	PVC	0.01	2,961	3	8	11	0.4		
Kirkland_Main-1367	Kirkland_Manholes-756	236.14	Kirkland_Manholes-759	235.08	17.7	6	8	PVC	0.01	1,727	3	12	15	0.9		
Kirkland_Main-1368	Kirkland_Manholes-759	235.08	Kirkland_Manholes-755	223.34	72.1	16.27	8	PVC	0.01	2,844	4	16	20	0.7		
Kirkland_Main-1369	Kirkland_Manholes-749	322.83	Kirkland_Manholes-748	311.92	207.7	5.25	8	PVC	0.01	1,616	15	36	51	3.2	SM14-Ex-EX71	
Kirkland_Main-1370	Kirkland_Manholes-743	333.02	Kirkland_Manholes-749	322.83	238.3	4.28	8	PVC	0.01	1,458	14	32	45	3.1	SM14-Ex-EX71	
Kirkland_Main-1371	Kirkland_Manholes-742	334.85	Kirkland_Manholes-743	333.02	278.1	0.66	8	PVC	0.01	572	9	20	29	5	SM14-Ex-EX71	
Kirkland_Main-1372	Kirkland_Manholes-744	343.43	Kirkland_Manholes-743	333.02	155.4	6.7	8	PVC	0.01	1,825	3	8	11	0.6	SM14-Ex-EX73	
Kirkland_Main-1373	Kirkland_Manholes-1551	340.04	Kirkland_Manholes-1548	334.13	358.9	1.65	8	PVC	0.01	905	1	4	5	0.5	SM14-Ex-EX122	
Kirkland_Main-1374	Kirkland_Manholes-1548	334.13	Kirkland_Manholes-1547	314.76	165.7	11.69	8	PVC	0.01	2,411	2	8	10	0.4	SM14-Ex-EX122	
Kirkland_Main-1375	Kirkland_Manholes-1554	318.87	Kirkland_Manholes-1547	314.76	166.1	2.48	8	PVC	0.01	1,109	3	12	15	1.3	SM14-Ex-EX122	
Kirkland_Main-1376	Kirkland_Manholes-1547	314.76	Kirkland_Manholes-1553	308.15	101.4	6.52	8	PVC	0.01	1,800	5	24	29	1.6	SM14-Ex-EX122	
Kirkland_Main-1377	Kirkland_Manholes-1549	335.84	Kirkland_Manholes-1550	330.23	147.4	3.81	8	PVC	0.01	1,375	1	4	5	0.3	SM14-Ex-EX122	
Kirkland_Main-1378	Kirkland_Manholes-1550	330.23	Kirkland_Manholes-1554	318.87	207.3	5.48	8	PVC	0.01	1,650	2	8	10	0.6	SM14-Ex-EX122	
Kirkland_Main-1379	Kirkland_Manholes-741	345.43	Kirkland_Manholes-696	340.09	318.5	1.68	8	PVC	0.01	913	1	4	5	0.6	SM14-Ex-EX74	
Kirkland_Main-1380	Kirkland_Manholes-696	340.09	Kirkland_Manholes-742	334.85	242.4	2.16	8	PVC	0.01	1,037	8	16	23	2.3	SM14-Ex-EX71	
Kirkland_Main-1381	Kirkland_Manholes-820	351.15	Kirkland_Manholes-821	328.81	334.9	6.67	8	PVC	0.01	1,821	1	4	5	0.3	SM14-Ex-EX72	
Kirkland_Main-1382	Kirkland_Manholes-745	351.42	Kirkland_Manholes-744	343.43	306.7	2.6	8	PVC	0.01	1,138	2	4	6	0.5	SM14-Ex-EX73	
Kirkland_Main-1383	Kirkland_Manholes-821	328.81	Kirkland_Manholes-746	326.06	200.6	1.37	8	PVC	0.01	825	2	8	10	1.2	SM14-Ex-EX72	
Kirkland_Main-1384	Kirkland_Manholes-746	326.06	Kirkland_Manholes-747	319.23	281	2.43	8	PVC	0.01	1,099	2	12	14	1.3	SM14-Ex-EX72	
Kirkland_Main-1385	Kirkland_Manholes-747	319.23	Kirkland_Manholes-748	311.92	331.6	2.2	8	PVC	0.01	1,047	3	16	19	1.8	SM14-Ex-EX72	
Kirkland_Main-1386	Kirkland_Manholes-1562	206.57	Kirkland_Manholes-1563	203.28	21.7	15.13	8	PVC	0.01	2,743	1	8	9	0.3		
Kirkland_Main-1387	Kirkland_Manholes-1560	251.28	Kirkland_Manholes-455	250.45	217.9	0.38	8	PVC	0.01	435	23	68	91	20.8	SM14-Ex-EX68	
Kirkland_Main-1388	Kirkland_Manholes-1559	253.89	Kirkland_Manholes-1560	251.28	258.2	1.01	8	PVC	0.01	709	22	64	86	12.1	SM14-Ex-EX68	

Existing with Proposed Improvements - Peak Hour Flow - Pipe Capacity Table

Label	Upstream Node	Upstream Invert Elevation (ft)	Downstream Node	Downstream Invert Elevation (ft)	Length (ft)	Slope (%)	Diameter (in)	Material	Manning's n	Design Capacity (gpm)	Domestic Flow (gpm)	I/I Flow (gpm)	Total Flow (gpm)	Percent Full (%)	CIP No.	Notes
Kirkland_Main-1389	Kirkland_Manholes-317	146.79	Kirkland_Manholes-318	146.51	72.2	0.39	12	PVC	0.01	1,298	89	320	409	31.5	SM14-Ex-EX30	
Kirkland_Main-1390	Kirkland_Manholes-1052	151.4	Kirkland_Manholes-316	147.8	353.6	1.02	8	PVC	0.01	711	89	303	392	55.1		
Kirkland_Main-1392	Kirkland_Manholes-264	215.3	Kirkland_Manholes-1099	211.44	157	2.46	8	PVC	0.01	1,105	0	4	4	0.4		
Kirkland_Main-1398	Kirkland_Manholes-836	335.7	Kirkland_Manholes-835	335.4	62.1	0.48	8	PVC	0.01	490	11	28	39	7.9		
Kirkland_Main-1399	Kirkland_Manholes-835	335.4	Kirkland_Manholes-839	334.68	84.6	0.85	8	PVC	0.01	650	13	36	48	7.4		
Kirkland_Main-1400	Kirkland_Manholes-837	336.53	Kirkland_Manholes-836	335.7	248.7	0.33	8	PVC	0.01	407	10	24	34	8.3		
Kirkland_Main-1401	Kirkland_Manholes-838	337.31	Kirkland_Manholes-837	336.53	120.5	0.65	8	PVC	0.01	567	7	20	27	4.8		
Kirkland_Main-1402	Kirkland_Manholes-840	326.85	Kirkland_Manholes-841	325.94	71	1.28	8	PVC	0.01	798	19	56	74	9.3		
Kirkland_Main-1403	Kirkland_Manholes-841	325.94	Kirkland_Manholes-842	324.88	230.1	0.46	8	PVC	0.01	479	20	60	80	16.6		
Kirkland_Main-1404	Kirkland_Manholes-843	340.26	Kirkland_Manholes-842	324.88	172	8.94	8	PVC	0.01	2,108	2	4	6	0.3		
Kirkland_Main-1405	Kirkland_Manholes-844	342.5	Kirkland_Manholes-845	341.21	161.2	0.8	8	PVC	0.01	631	2	4	6	0.9		
Kirkland_Main-1406	Kirkland_Manholes-846	342.07	Kirkland_Manholes-845	341.21	84.3	1.02	8	PVC	0.01	712	3	16	19	2.7		
Kirkland_Main-1407	Kirkland_Manholes-845	341.21	Kirkland_Manholes-850	340.39	138.4	0.59	8	PVC	0.01	543	5	24	29	5.4		
Kirkland_Main-1408	Kirkland_Manholes-849	342.42	Kirkland_Manholes-846	342.07	117.3	0.3	8	PVC	0.01	385	2	12	14	3.7		
Kirkland_Main-1409	Kirkland_Manholes-847	343.01	Kirkland_Manholes-849	342.42	70.3	0.84	8	PVC	0.01	646	2	8	10	1.6		
Kirkland_Main-1410	Kirkland_Manholes-848	344.32	Kirkland_Manholes-847	343.01	145.5	0.9	8	PVC	0.01	669	2	4	6	0.9		
Kirkland_Main-1411	Kirkland_Manholes-850	340.39	Kirkland_Manholes-851	339.16	69.3	1.78	8	PVC	0.01	941	6	28	34	3.6		
Kirkland_Main-1412	Kirkland_Manholes-1538	302.73	Kirkland_Manholes-1537	302.03	362.6	0.19	8	PVC	0.01	310	6	16	22	7.1	SM14-Ex-EX124	
Kirkland_Main-1413	Kirkland_Manholes-1511	290.62	Kirkland_Manholes-1509	286.35	84.7	5.04	8	PVC	0.01	1,583	2	4	6	0.4		
Kirkland_Main-1414	Kirkland_Manholes-1510	287.19	Kirkland_Manholes-1509	286.35	79	1.06	8	PVC	0.01	727	1	4	5	0.7		
Kirkland_Main-1415	Kirkland_Manholes-1509	286.35	Kirkland_Manholes-1508	277.83	283.5	3.01	8	PVC	0.01	1,222	3	12	15	1.2		Drop Connection
Kirkland_Main-1416	Kirkland_Manholes-1537	302.03	Kirkland_Manholes-1536	298.86	351.3	0.9	8	PVC	0.01	670	9	20	29	4.3	SM14-Ex-EX124	
Kirkland_Main-1417	Kirkland_Manholes-762	287.2	Kirkland_Manholes-763	274.33	165.6	7.77	8	PVC	0.01	1,966	2	4	6	0.3	SM14-Ex-EX125	
Kirkland_Main-1418	Kirkland_Manholes-763	274.33	Kirkland_Manholes-1531	265.03	234.1	3.97	8	PVC	0.01	1,405	4	8	12	0.9	SM14-Ex-EX125	
Kirkland_Main-1419	Kirkland_Manholes-1541	294.69	Kirkland_Manholes-1543	289	216.2	2.63	8	PVC	0.01	1,144	6	16	22	1.9	SM14-Ex-EX123	
Kirkland_Main-1420	Kirkland_Manholes-1536	298.86	Kirkland_Manholes-1518	277.88	393.1	5.34	8	PVC	0.01	1,629	10	24	34	2.1	SM14-Ex-EX124	
Kirkland_Main-1421	Kirkland_Manholes-1544	284.46	Kirkland_Manholes-1545	272.4	63.3	19.06	8	PVC	0.01	3,078	9	24	32	1.1	SM14-Ex-EX123	
Kirkland_Main-1422	Kirkland_Manholes-1558	160.79	O-20	159.86	16.6	5.62	8	PVC	0.01	1,671	1	4	5	0.3		
Kirkland_Main-1424	Kirkland_Manholes-1557	161.32	O-21	159.86	64.6	2.26	8	PVC	0.01	1,060	2	8	10	0.9		
Kirkland_Main-1425	Kirkland_Manholes-1556	178.05	Kirkland_Manholes-1557	161.32	76.6	21.85	8	PVC	0.01	3,296	1	4	5	0.1		
Kirkland_Main-1427	Kirkland_Manholes-541	450.25	Kirkland_Manholes-542	440.69	230.2	4.15	8	PVC	0.01	1,437	8	68	76	5.3		
Kirkland_Main-1428	Kirkland_Manholes-542	440.69	Kirkland_Manholes-1978	440.32	89.3	0.41	8	PVC	0.01	454	9	72	80	17.7		
Kirkland_Main-1429	Kirkland_Manholes-544	449.4	Kirkland_Manholes-543	448.24	235	0.49	8	PVC	0.01	495	19	68	86	17.5		
Kirkland_Main-1430	Kirkland_Manholes-546	452.43	Kirkland_Manholes-545	450.22	300.2	0.74	8	PVC	0.01	605	15	60	75	12.4		
Kirkland_Main-1431	Kirkland_Manholes-545	450.22	Kirkland_Manholes-544	449.4	161.7	0.51	8	PVC	0.01	502	18	64	81	16.2		
Kirkland_Main-1432	Kirkland_Manholes-547	452.62	Kirkland_Manholes-546	452.43	162.6	0.12	8	PVC	0.01	243	13	56	69	28.4		
Kirkland_Main-1433	Kirkland_Manholes-548	453.36	Kirkland_Manholes-547	452.62	135.2	0.55	8	PVC	0.01	522	12	52	64	12.3		
Kirkland_Main-1434	Kirkland_Manholes-549	453.9	Kirkland_Manholes-548	453.36	128.1	0.42	8	PVC	0.01	456	11	40	50	11		
Kirkland_Main-1435	Kirkland_Manholes-552	455.6	Kirkland_Manholes-549	453.9	177.5	0.96	8	PVC	0.01	690	11	36	46	6.7		
Kirkland_Main-1436	Kirkland_Manholes-550	455.89	Kirkland_Manholes-552	455.6	183.6	0.16	8	PVC	0.01	280	1	4	5	1.7		
Kirkland_Main-1437	Kirkland_Manholes-551	462.06	Kirkland_Manholes-563	461.52	194.4	0.28	8	PVC	0.01	372	4	4	8	2.3		
Kirkland_Main-1438	Kirkland_Manholes-553	455.61	Kirkland_Manholes-552	455.6	92.3	0.01	8	PVC	0.01	73	10	28	37	50.9		
Kirkland_Main-1439	Kirkland_Manholes-554	456.45	Kirkland_Manholes-553	455.61	88.9	0.94	8	PVC	0.01	685	9	24	33	4.8		
Kirkland_Main-1440	Kirkland_Manholes-558	457.55	Kirkland_Manholes-554	456.45	287.7	0.38	8	PVC	0.01	436	7	16	23	5.2		
Kirkland_Main-1441	Kirkland_Manholes-557	460.23	Kirkland_Manholes-554	456.45	194.6	1.94	8	PVC	0.01	983	1	4	5	0.5		
Kirkland_Main-1442	Kirkland_Manholes-559	467.58	Kirkland_Manholes-558	457.55	209.6	4.79	8	PVC	0.01	1,542	2	4	6	0.4		
Kirkland_Main-1443	Kirkland_Manholes-563	461.52	Kirkland_Manholes-558	457.55	324.2	1.22	8	PVC	0.01	780	4	8	12	1.6		
Kirkland_Main-1444	Kirkland_Manholes-562	483.8	Kirkland_Manholes-560	483.4	99.9	0.4	8	PVC	0.01	446	1	4	5	1.2		
Kirkland_Main-1445	Kirkland_Manholes-565	468.54	Kirkland_Manholes-2020	468.34	312.4	0.06	10	PVC	0.01	326	74	143	217	66.5	SM14-2035-DF12	
Kirkland_Main-1446	Kirkland_Manholes-564	469.28	Kirkland_Manholes-565	468.54	228	0.32	10	PVC	0.01	728	73	139	213	29.2		
Kirkland_Main-1447	Kirkland_Manholes-567	470.28	Kirkland_Manholes-564	469.28	324.2	0.31	10	PVC	0.01	710	61	95	156	22		
Kirkland_Main-1448	Kirkland_Manholes-3045	483.35	Kirkland_Manholes-2029	479.06	297.6	1.44	8	PVC	0.01	846	2	8	10	1.2		
Kirkland_Main-1449	Kirkland_Manholes-568	471.29	Kirkland_Manholes-567	470.28	325	0.31	10	PVC	0.01	713	60	87	148	20.7		
Kirkland_Main-1450	Kirkland_Manholes-569	473.29	Kirkland_Manholes-568	471.29	178.4	1.12	10	PVC	0.01	1,354	60	83	143	10.6		
Kirkland_Main-1451	Kirkland_Manholes-570	473.5	Kirkland_Manholes-569	473.29	54.9	0.38	8	PVC	0.01	433	60	79	139	32.2		
Kirkland_Main-1452	Kirkland_Manholes-1406	473.57	Kirkland_Manholes-570	473.5	288.8	0.03	12	PVC	0.01	330	55	75	130	39.4	SM14-Ex-EX275	
Kirkland_Main-1453	Kirkland_Manholes-571	472.91	Kirkland_Manholes-567	470.28	172.6	1.52	8	PVC	0.01	870	0	4	4	0.5		
Kirkland_Main-1454	Kirkland_Manholes-575	113.73	Kirkland_Manholes-574	110.98	152.2	1.81	8	PVC	0.01	948	2	8	10	1	SM14-Ex-EX116	
Kirkland_Main-1455	Kirkland_Manholes-1665	94.21	Kirkland_Manholes-1666	89.71	26.9	16.73	8	PVC	0.01	2,883	28	91	119	4.1		
Kirkland_Main-1456	Kirkland_Manholes-957	315.92	Kirkland_Manholes-958	300.6	184.6	8.3	8	PVC	0.01	2,031	3	20	23	1.1		
Kirkland_Main-1457	Kirkland_Manholes-958	300.6	Kirkland_Manholes-942	300.01	173	0.34	8	PVC	0.01	412	4	24	28	6.8		
Kirkland_Main-1458	Kirkland_Manholes-960	258.67	Kirkland_Manholes-959	252.05	190.9	3.47	8	PVC	0.01	1,313	2	4	6	0.5		

Existing with Proposed Improvements - Peak Hour Flow - Pipe Capacity Table

Label	Upstream Node	Upstream Invert Elevation (ft)	Downstream Node	Downstream Invert Elevation (ft)	Length (ft)	Slope (%)	Diameter (in)	Material	Manning's n	Design Capacity (gpm)	Domestic Flow (gpm)	I/I Flow (gpm)	Total Flow (gpm)	Percent Full (%)	CIP No.	Notes
Kirkland_Main-1459	Kirkland_Manholes-2752	253.8	Kirkland_Manholes-959	252.05	339.9	0.51	8	PVC	0.01	506	9	34	44	8.6		
Kirkland_Main-1460	Kirkland_Manholes-959	252.05	Kirkland_Manholes-963	250.7	229	0.59	8	PVC	0.01	541	14	43	56	10.4		
Kirkland_Main-1461	Kirkland_Manholes-961	263.75	Kirkland_Manholes-962	249.53	185.7	7.66	8	PVC	0.01	1,951	2	4	6	0.3		
Kirkland_Main-1462	Kirkland_Manholes-964	266.7	Kirkland_Manholes-963	250.7	315.2	5.08	8	PVC	0.01	1,589	1	4	5	0.3		
Kirkland_Main-1463	Kirkland_Manholes-963	250.7	Kirkland_Manholes-962	249.53	229.2	0.51	8	PVC	0.01	504	17	51	68	13.5		
Kirkland_Main-1464	Kirkland_Manholes-962	249.53	Kirkland_Manholes-966	247.26	381	0.59	8	PVC	0.01	544	20	60	79	14.6		
Kirkland_Main-1465	Kirkland_Manholes-965	252.45	Kirkland_Manholes-966	247.26	188.4	2.75	8	PVC	0.01	1,170	2	4	6	0.6		
Kirkland_Main-1466	Kirkland_Manholes-966	247.26	Kirkland_Manholes-967	246.35	132.7	0.69	8	PVC	0.01	584	24	68	92	15.7		
Kirkland_Main-1467	Kirkland_Manholes-968	245.61	Kirkland_Manholes-969	239.3	150	4.21	8	PVC	0.01	1,446	0	4	5	0.3		
Kirkland_Main-1468	Kirkland_Manholes-969	239.3	Kirkland_Manholes-970	236.6	291.2	0.93	8	PVC	0.01	679	1	9	9	1.4		
Kirkland_Main-1469	Kirkland_Manholes-970	236.6	Kirkland_Manholes-971	236.2	92.8	0.43	8	PVC	0.01	463	2	13	15	3.2		
Kirkland_Main-1470	Kirkland_Manholes-967	246.35	Kirkland_Manholes-972	246.27	41.8	0.2	8	PVC	0.01	314	24	73	96	30.6		
Kirkland_Main-1471	Kirkland_Manholes-971	236.2	Kirkland_Manholes-973	233.19	134.5	2.24	8	PVC	0.01	1,055	3	17	20	1.9	SM14-Ex-EX2	
Kirkland_Main-1472	Kirkland_Manholes-974	234.1	Kirkland_Manholes-973	233.19	211	0.43	8	PVC	0.01	463	2	9	10	2.2		
Kirkland_Main-1473	Kirkland_Manholes-987	239.5	Kirkland_Manholes-976	229.3	219.2	4.65	8	PVC	0.01	1,521	1	4	5	0.4		
Kirkland_Main-1474	Kirkland_Manholes-975	230.2	Kirkland_Manholes-976	229.3	22.7	3.96	8	PVC	0.01	1,404	5	34	39	2.8		
Kirkland_Main-1475	Kirkland_Manholes-973	233.19	Kirkland_Manholes-975	230.2	123.5	2.42	8	PVC	0.01	1,097	5	30	35	3.2		
Kirkland_Main-1476	Kirkland_Manholes-976	229.3	Kirkland_Manholes-977	225.95	181.2	1.85	8	PVC	0.01	959	7	43	49	5.1		
Kirkland_Main-1478	Kirkland_Manholes-1564	164.37	O-15	160	18.2	24.07	8	PVC	0.01	3,459	2	16	18	0.5		
Kirkland_Main-1479	Kirkland_Manholes-755	223.34	Kirkland_Manholes-1565	218.86	20.1	22.24	8	PVC	0.01	3,325	4	20	24	0.7		
Kirkland_Main-1480	Kirkland_Manholes-1567	133.87	Kirkland_Manholes-1566	130.52	314.6	1.06	8	PVC	0.01	728	3	8	12	1.6	SM14-Ex-EX119	
Kirkland_Main-1481	Kirkland_Manholes-1566	130.52	Kirkland_Manholes-1604	117.22	313.5	4.24	8	PVC	0.01	1,452	4	16	20	1.4	SM14-Ex-EX119	
Kirkland_Main-1482	Kirkland_Manholes-776	207.48	Kirkland_Manholes-775	172.73	191.1	18.19	8	PVC	0.01	3,007	5	28	33	1.1		
Kirkland_Main-1483	Kirkland_Manholes-1565	218.86	Kirkland_Manholes-776	207.48	52.1	21.84	8	PVC	0.01	3,295	4	24	28	0.8		
Kirkland_Main-1484	Kirkland_Manholes-1263	156.98	Kirkland_Manholes-1262	156.59	13.2	2.96	8	PVC	0.01	1,213	0	8	8	0.7	SM14-Ex-EX111	
Kirkland_Main-1485	Kirkland_Manholes-1262	156.59	Kirkland_Manholes-1261	144.57	314.4	3.82	8	PVC	0.01	1,379	4	41	46	3.3	SM14-Ex-EX111	
Kirkland_Main-1486	Kirkland_Manholes-1260	164.33	Kirkland_Manholes-1261	144.57	293.7	6.73	8	PVC	0.01	1,829	2	8	10	0.5	SM14-Ex-EX110	
Kirkland_Main-1488	Kirkland_Manholes-1259	154.8	Kirkland_Manholes-1258	154.28	130.3	0.4	8	PVC	0.01	445	6	33	39	8.8	SM14-Ex-EX108	
Kirkland_Main-1489	Kirkland_Manholes-1258	154.28	Kirkland_Manholes-1257	152.6	347	0.48	8	PVC	0.01	491	13	66	79	16	SM14-Ex-EX108	
Kirkland_Main-1490	Kirkland_Manholes-1257	152.6	Kirkland_Manholes-1256	151.53	24	4.46	8	PVC	0.01	1,489	14	74	88	5.9	SM14-Ex-EX108	
Kirkland_Main-1494	Kirkland_Manholes-2467	42.59	Kirkland_Manholes-2466	40.06	76.4	3.31	8	PVC	0.01	1,283	9	19	29	2.2		
Kirkland_Main-1495	Kirkland_Manholes-2469	49.1	Kirkland_Manholes-2467	42.59	138.2	4.71	8	PVC	0.01	1,530	8	13	21	1.3		
Kirkland_Main-1496	Kirkland_Manholes-2468	49.98	Kirkland_Manholes-2469	49.48	124.2	0.4	8	PVC	0.01	446	7	6	13	3		Drop Connection
Kirkland_Main-1498	Kirkland_Manholes-2470	236.6	Kirkland_Manholes-2472	223.64	225	5.76	8	PVC	0.01	1,692	1	4	5	0.3	SM14-Ex-EX282	
Kirkland_Main-1499	Kirkland_Manholes-2472	223.64	Kirkland_Manholes-2473	222.78	215.8	0.4	8	PVC	0.01	446	3	12	15	3.4	SM14-Ex-EX282	Drop Connection
Kirkland_Main-1500	Kirkland_Manholes-2473	207.49	Kirkland_Manholes-2474	188.45	212.3	8.97	8	PVC	0.01	2,111	5	16	21	1	SM14-Ex-EX282	
Kirkland_Main-1501	Kirkland_Manholes-2471	234.47	Kirkland_Manholes-2472	223.64	364.1	2.97	8	PVC	0.01	1,216	1	4	5	0.4	SM14-Ex-EX283	
Kirkland_Main-1502	Kirkland_Manholes-2474	188.45	Kirkland_Manholes-2476	187.5	225.3	0.42	8	PVC	0.01	458	7	24	31	6.7	SM14-Ex-EX282	
Kirkland_Main-1505	Kirkland_Manholes-2492	55.46	Kirkland_Manholes-2666	55.28	147.8	0.12	18	PVC	0.01	2,139	109	316	425	19.9	SM14-Ex-EX222	
Kirkland_Main-1506	Kirkland_Manholes-2088	57.39	Kirkland_Manholes-2492	55.46	144	1.34	18	PVC	0.01	7,094	83	267	351	4.9	SM14-Ex-EX222	
Kirkland_Main-1507	Kirkland_Manholes-2090	57.44	Kirkland_Manholes-2088	57.39	370.9	0.01	18	PVC	0.01	712	83	255	338	47.6	SM14-Ex-EX222	
Kirkland_Main-1508	Kirkland_Manholes-2089	58.23	Kirkland_Manholes-2088	57.39	14.1	5.97	8	PVC	0.01	1,723	0	6	6	0.4		
Kirkland_Main-1509	Kirkland_Manholes-2620	281.06	Kirkland_Manholes-2618	278.4	382.5	0.7	8	PVC	0.01	588	2	8	10	1.7	SM14-Ex-EX299	
Kirkland_Main-1510	Kirkland_Manholes-2604	283.17	Kirkland_Manholes-2620	281.06	375.6	0.56	8	PVC	0.01	528	1	4	5	0.9	SM14-Ex-EX299	
Kirkland_Main-1512	Kirkland_Manholes-2621	277.53	Kirkland_Manholes-2433	276.88	161.5	0.4	8	PVC	0.01	446	1	4	5	1.2	SM14-Ex-EX244	Drop Connection
Kirkland_Main-1513	Kirkland_Manholes-2623	277.98	Kirkland_Manholes-2622	271.8	433.3	1.43	8	PVC	0.01	842	1	4	5	0.6	SM14-Ex-EX281	
Kirkland_Main-1514	Kirkland_Manholes-2622	271.8	Kirkland_Manholes-2625	260.54	221.9	5.07	8	PVC	0.01	1,588	1	8	9	0.6	SM14-Ex-EX281	
Kirkland_Main-1515	Kirkland_Manholes-2624	276.22	Kirkland_Manholes-2635	275.48	185.1	0.4	8	PVC	0.01	446	1	4	5	1	SM14-Ex-EX294	
Kirkland_Main-1516	Kirkland_Manholes-2625	260.54	Kirkland_Manholes-2626	246.92	188.3	7.23	8	PVC	0.01	1,896	2	12	14	0.7	SM14-Ex-EX281	
Kirkland_Main-1517	Kirkland_Manholes-2626	246.92	Kirkland_Manholes-2627	215.5	237.8	13.21	8	PVC	0.01	2,563	2	16	18	0.7	SM14-Ex-EX281	
Kirkland_Main-1518	Kirkland_Manholes-2627	215.5	Kirkland_Manholes-2628	186	220.8	13.36	8	PVC	0.01	2,577	4	20	24	0.9	SM14-Ex-EX281	
Kirkland_Main-1519	Kirkland_Manholes-2476	187.5	Kirkland_Manholes-2628	186	397.3	0.38	8	PVC	0.01	433	9	28	37	8.5	SM14-Ex-EX282	
Kirkland_Main-1520	Kirkland_Manholes-2606	272.98	Kirkland_Manholes-2607	264.34	256.6	3.37	8	PVC	0.01	1,294	2	4	6	0.4	SM14-Ex-EX298	
Kirkland_Main-1521	Kirkland_Manholes-2607	264.34	Kirkland_Manholes-2608	229.39	401.2	8.71	8	PVC	0.01	2,081	5	8	13	0.6	SM14-Ex-EX298	Drop Connection
Kirkland_Main-1522	Kirkland_Manholes-2608	227.04	Kirkland_Manholes-2600	217.97	170.3	5.33	8	PVC	0.01	1,627	6	12	18	1.1	SM14-Ex-EX298	
Kirkland_Main-1523	Kirkland_Manholes-2630	232.51	Kirkland_Manholes-2629	172.55	421	14.24	8	PVC	0.01	2,661	9	20	29	1.1	SM14-Ex-EX295	
Kirkland_Main-1524	Kirkland_Manholes-1219	264.33	Kirkland_Manholes-1139	247.37	248	6.84	8	PVC	0.01	1,844	1	8	9	0.5	SM14-Ex-EX80	
Kirkland_Main-1525	Kirkland_Manholes-1139	247.37	Kirkland_Manholes-1138	221.13	248.6	10.56	8	PVC	0.01	2,291	2	16	19	0.8	SM14-Ex-EX80	
Kirkland_Main-1526	Kirkland_Manholes-1138	221.13	Kirkland_Manholes-1141	204.1	177.9	9.57	8	PVC	0.01	2,181	3	25	28	1.3	SM14-Ex-EX80	
Kirkland_Main-1527	Kirkland_Manholes-1152	135.47	Kirkland_Manholes-1811	129.72	351.2	1.64	8	PVC	0.01	902	10	74	84	9.3	SM10	
Kirkland_Main-1528	Kirkland_Manholes-1153	137.55	Kirkland_Manholes-1154	131.73	270.2	2.15	8	PVC	0.01	1,035	2	8	10	1	SM10	
Kirkland_Main-1529	Kirkland_Manholes-1154	131.73	Kirkland_Manholes-1155	122.09	288.9	3.34	8	PVC	0.01	1,288	2	16	19	1.5	SM10	

Existing with Proposed Improvements - Peak Hour Flow - Pipe Capacity Table

Label	Upstream Node	Upstream Invert Elevation (ft)	Downstream Node	Downstream Invert Elevation (ft)	Length (ft)	Slope (%)	Diameter (in)	Material	Manning's n	Design Capacity (gpm)	Domestic Flow (gpm)	I/I Flow (gpm)	Total Flow (gpm)	Percent Full (%)	CIP No.	Notes
Kirkland_Main-1530	Kirkland_Manholes-1155	122.09	Kirkland_Manholes-1156	108.19	328.7	4.23	8	PVC	0.01	1,450	3	25	28	1.9	SM10	
Kirkland_Main-1531	Kirkland_Manholes-1156	108.19	Kirkland_Manholes-1157	99.29	118.4	7.51	8	PVC	0.01	1,933	4	33	37	1.9	SM10	
Kirkland_Main-1532	Kirkland_Manholes-1157	99.29	Kirkland_Manholes-1159	82.66	203.9	8.16	8	PVC	0.01	2,014	9	66	74	3.7	SM10	
Kirkland_Main-1533	Kirkland_Manholes-1159	82.66	Kirkland_Manholes-1160	77.11	29.4	18.89	8	PVC	0.01	3,064	10	74	84	2.7		
Kirkland_Main-1534	Kirkland_Manholes-1158	124.93	Kirkland_Manholes-1157	99.29	160.8	15.95	8	PVC	0.01	2,816	4	25	28	1	SM10	
Kirkland_Main-1535	Kirkland_Manholes-1162	78.51	Kirkland_Manholes-1160	77.11	390.4	0.36	15	PVC	0.01	2,257	67	420	838	37.1		
Kirkland_Main-1536	Kirkland_Manholes-1179	123.76	Kirkland_Manholes-1163	96.51	315	8.65	8	PVC	0.01	2,074	38	165	203	9.8	SM10	
Kirkland_Main-1537	Kirkland_Manholes-1163	96.51	Kirkland_Manholes-1161	78.67	122.8	14.53	8	PVC	0.01	2,687	45	222	267	10	SM14-Ex-EX77	
Kirkland_Main-1538	Kirkland_Manholes-1164	119.66	Kirkland_Manholes-1163	96.51	338.6	6.84	8	PVC	0.01	1,844	6	49	56	3	SM10	
Kirkland_Main-1539	Kirkland_Manholes-1165	133.24	Kirkland_Manholes-1164	119.66	224	6.06	8	PVC	0.01	1,736	5	41	47	2.7	SM10	
Kirkland_Main-1540	Kirkland_Manholes-1166	151.97	Kirkland_Manholes-1165	133.24	158.7	11.8	8	PVC	0.01	2,422	1	8	9	0.4	SM10	
Kirkland_Main-1541	Kirkland_Manholes-1167	140.51	Kirkland_Manholes-1165	133.24	127.8	5.69	8	PVC	0.01	1,681	4	25	29	1.7	SM10	
Kirkland_Main-1542	Kirkland_Manholes-1168	149.52	Kirkland_Manholes-1167	140.51	328.4	2.74	8	PVC	0.01	1,168	3	16	20	1.7	SM10	
Kirkland_Main-1543	Kirkland_Manholes-1169	156.83	Kirkland_Manholes-1168	149.52	316.3	2.31	8	PVC	0.01	1,072	1	8	10	0.9	SM10	
Kirkland_Main-1544	Kirkland_Manholes-662	248.07	Kirkland_Manholes-651	247.63	225.4	0.2	15	PVC	0.01	1,665	231	1,013	1,244	74.7	SM14-2035-DF9	
Kirkland_Main-1545	Kirkland_Manholes-653	238.2	Kirkland_Manholes-639	237.89	305.4	0.1	21	PVC	0.01	2,946	207	477	683	23.2		
Kirkland_Main-1546	Kirkland_Manholes-654	239.59	Kirkland_Manholes-653	238.2	298.1	0.47	21	PVC	0.01	6,313	206	473	679	10.8		
Kirkland_Main-1547	Kirkland_Manholes-655	240	Kirkland_Manholes-654	239.59	255.9	0.16	21	PVC	0.01	3,700	205	469	674	18.2		Drop Connection
Kirkland_Main-1548	Kirkland_Manholes-1574	241.8	Kirkland_Manholes-657	241.69	265.5	0.04	21	PVC	0.01	1,882	204	457	661	35.1		
Kirkland_Main-1549	Kirkland_Manholes-657	241.69	Kirkland_Manholes-656	240.1	132.5	1.2	21	PVC	0.01	10,129	204	461	665	6.6		
Kirkland_Main-1550	Kirkland_Manholes-656	240.1	Kirkland_Manholes-655	240	131.8	0.08	21	PVC	0.01	2,546	204	465	669	26.3		Drop Connection
Kirkland_Main-1551	Kirkland_Manholes-658	246.8	Kirkland_Manholes-659	246.11	66.6	1.04	8	PVC	0.01	718	1	12	12	1.7		
Kirkland_Main-1552	Kirkland_Manholes-660	246.84	Kirkland_Manholes-659	246.11	57.6	1.27	8	PVC	0.01	793	2	4	6	0.8		
Kirkland_Main-1553	Kirkland_Manholes-659	246.11	Kirkland_Manholes-661	245.17	89.4	1.05	8	PVC	0.01	723	3	20	23	3.1		
Kirkland_Main-1554	Kirkland_Manholes-651	247.63	Kirkland_Manholes-645	243.42	262.6	1.6	15	PVC	0.01	4,772	232	1,017	1,249	26.2	SM14-2035-DF9	
Kirkland_Main-1555	Kirkland_Manholes-652	251.94	Kirkland_Manholes-662	248.07	324.4	1.19	15	PVC	0.01	4,116	231	1,009	1,240	30.1	SM14-2035-DF9	
Kirkland_Main-1556	Kirkland_Manholes-664	268.55	Kirkland_Manholes-663	252.67	383.8	4.14	8	PVC	0.01	1,434	1	4	5	0.3		
Kirkland_Main-1557	Kirkland_Manholes-663	252.67	Kirkland_Manholes-652	251.94	362.7	0.2	15	PVC	0.01	1,691	230	1,005	1,236	73.1	SM14-2035-DF9	
Kirkland_Main-1558	Kirkland_Manholes-666	254.95	Kirkland_Manholes-665	253.2	321.8	0.54	15	PVC	0.01	2,780	207	898	1,105	39.8		
Kirkland_Main-1559	Kirkland_Manholes-665	253.2	Kirkland_Manholes-663	252.67	360.1	0.15	18	PVC	0.01	2,351	228	997	1,225	52.1	SM14-Ex-EX135	
Kirkland_Main-1560	Kirkland_Manholes-668	260.28	Kirkland_Manholes-667	256.8	251.1	1.39	8	PVC	0.01	830	3	4	7	0.9		
Kirkland_Main-1561	Kirkland_Manholes-667	256.8	Kirkland_Manholes-665	253.2	386.9	0.93	8	PVC	0.01	680	18	95	114	16.7		
Kirkland_Main-1562	Kirkland_Manholes-669	262.97	Kirkland_Manholes-667	256.8	300.6	2.05	8	PVC	0.01	1,010	13	87	101	10		
Kirkland_Main-1563	Kirkland_Manholes-671	267.47	Kirkland_Manholes-670	264.24	114.1	2.83	8	PVC	0.01	1,186	7	24	31	2.6		
Kirkland_Main-1564	Kirkland_Manholes-672	266.2	Kirkland_Manholes-670	264.24	209.3	0.94	8	PVC	0.01	682	6	56	61	9		
Kirkland_Main-1565	Kirkland_Manholes-670	264.24	Kirkland_Manholes-669	262.97	88.5	1.43	8	PVC	0.01	844	13	83	96	11.4		
Kirkland_Main-1567	Kirkland_Manholes-676	280.09	Kirkland_Manholes-674	276.15	217.6	1.81	8	PVC	0.01	949	3	4	7	0.7		
Kirkland_Main-1568	Kirkland_Manholes-674	276.15	Kirkland_Manholes-675	275.52	20.5	3.07	8	PVC	0.01	1,235	5	16	21	1.7		
Kirkland_Main-1569	Kirkland_Manholes-673	281.46	Kirkland_Manholes-674	276.15	196.8	2.7	8	PVC	0.01	1,158	1	8	9	0.8		
Kirkland_Main-1570	Kirkland_Manholes-675	275.52	Kirkland_Manholes-671	267.47	256.7	3.14	8	PVC	0.01	1,249	6	20	25	2		
Kirkland_Main-1571	Kirkland_Manholes-677	287.02	Kirkland_Manholes-673	281.46	185.8	2.99	8	PVC	0.01	1,220	1	4	5	0.4		
Kirkland_Main-1572	Kirkland_Manholes-1728	26.2	Kirkland_Manholes-1729	25.06	120.1	0.95	12	PVC	0.01	2,026	69	58	127	6.3		
Kirkland_Main-1573	Kirkland_Manholes-1727	26.48	Kirkland_Manholes-1728	26.2	59.2	0.47	8	PVC	0.01	485	39	33	72	14.8		
Kirkland_Main-1574	Kirkland_Manholes-1724	26.68	Kirkland_Manholes-1727	26.48	122.2	0.16	8	PVC	0.01	285	39	25	63	22.3		
Kirkland_Main-1575	Kirkland_Manholes-1725	28.56	Kirkland_Manholes-1724	26.68	150.5	1.25	8	PVC	0.01	788	21	16	38	4.8		
Kirkland_Main-1576	Kirkland_Manholes-1726	29.93	Kirkland_Manholes-1725	28.56	57.1	2.4	8	PVC	0.01	1,092	7	8	16	1.4		
Kirkland_Main-1577	Kirkland_Manholes-1650	145.43	Kirkland_Manholes-1711	136.47	206.1	4.35	12	PVC	0.01	4,335	9	66	75	1.7	SM14-Ex-EX196	
Kirkland_Main-1578	Kirkland_Manholes-1751	37.07	Kirkland_Manholes-1750	33.34	26	14.35	8	PVC	0.01	2,670	0	8	8	0.3	SM14-Ex-EX164	
Kirkland_Main-1580	Kirkland_Manholes-2722	21	Kirkland_Manholes-3100	18.3	194.6	1.39	12	PVC	0.01	2,449	88	61	149	6.1	SM14-Ex-EX289	
Kirkland_Main-1585	Kirkland_Manholes-1750	33.34	Kirkland_Manholes-1749	32.74	150.9	0.4	8	PVC	0.01	446	1	16	18	4		Drop Connection
Kirkland_Main-1586	Kirkland_Manholes-1749	30.51	Kirkland_Manholes-1745	27.57	191.8	1.53	8	PVC	0.01	873	1	25	26	3		
Kirkland_Main-1587	Kirkland_Manholes-1744	27.68	Kirkland_Manholes-1745	27.57	23.9	0.46	8	PVC	0.01	479	0	8	8	1.7		
Kirkland_Main-1588	Kirkland_Manholes-1955	335.45	Kirkland_Manholes-1958	324.88	118.1	8.95	8	PVC	0.01	2,109	8	12	20	1		
Kirkland_Main-1589	Kirkland_Manholes-1958	324.88	Kirkland_Manholes-1939	324.34	135.7	0.4	8	PVC	0.01	446	8	20	28	6.4		
Kirkland_Main-1590	Kirkland_Manholes-1959	325.55	Kirkland_Manholes-1958	324.88	167.8	0.4	8	PVC	0.01	446	0	4	4	0.9		
Kirkland_Main-1591	Kirkland_Manholes-1960	312.18	Kirkland_Manholes-1892	301.26	279	3.91	8	PVC	0.01	1,395	0	4	4	0.3		
Kirkland_Main-1592	Kirkland_Manholes-1962	345.61	Kirkland_Manholes-1961	341.24	157.8	2.77	8	PVC	0.01	1,173	13	4	17	1.5		
Kirkland_Main-1593	Kirkland_Manholes-1961	341.24	Kirkland_Manholes-1964	341.08	188.7	0.08	8	PVC	0.01	205	24	64	88	42.8		
Kirkland_Main-1594	Kirkland_Manholes-1964	341.08	Kirkland_Manholes-1963	340.77	13.1	2.37	8	PVC	0.01	1,085	53	91	145	13.3		
Kirkland_Main-1595	Kirkland_Manholes-1965	345.05	Kirkland_Manholes-1964	341.08	103.3	3.84	8	PVC	0.01	1,382	29	24	53	3.8		
Kirkland_Main-1596	Kirkland_Manholes-1967	421.47	Kirkland_Manholes-1966	418.21	134.2	2.43	8	PVC	0.01	1,099	28	155	183	16.7	SM14-Ex-EX216	
Kirkland_Main-1597	Kirkland_Manholes-1968	421.67	Kirkland_Manholes-1967	421.47	23.9	0.84	8	PVC	0.01	646	28	151	179	27.7		

Existing with Proposed Improvements - Peak Hour Flow - Pipe Capacity Table

Label	Upstream Node	Upstream Invert Elevation (ft)	Downstream Node	Downstream Invert Elevation (ft)	Length (ft)	Slope (%)	Diameter (in)	Material	Manning's n	Design Capacity (gpm)	Domestic Flow (gpm)	I/I Flow (gpm)	Total Flow (gpm)	Percent Full (%)	CIP No.	Notes
Kirkland_Main-1598	Kirkland_Manholes-1969	423.5	Kirkland_Manholes-1968	421.67	353.5	0.52	8	PVC	0.01	507	26	147	173	34.1		
Kirkland_Main-1599	Kirkland_Manholes-1970	425.5	Kirkland_Manholes-1969	423.5	200.6	1	8	PVC	0.01	704	3	16	19	2.7		
Kirkland_Main-1600	Kirkland_Manholes-1974	432	Kirkland_Manholes-1969	423.5	272.7	3.12	8	PVC	0.01	1,245	22	127	149	12		
Kirkland_Main-1601	Kirkland_Manholes-1971	425.8	Kirkland_Manholes-1970	425.5	74.8	0.4	8	PVC	0.01	446	2	12	14	3.2		
Kirkland_Main-1602	Kirkland_Manholes-1972	426.31	Kirkland_Manholes-1971	425.8	127.8	0.4	8	PVC	0.01	446	2	8	10	2.2		
Kirkland_Main-1603	Kirkland_Manholes-1973	430.86	Kirkland_Manholes-1972	426.31	87.6	5.19	8	PVC	0.01	1,607	1	4	4	0.3		
Kirkland_Main-1604	Kirkland_Manholes-2631	265.77	Kirkland_Manholes-2630	232.51	349	9.53	8	PVC	0.01	2,176	6	16	22	1	SM14-Ex-EX295	
Kirkland_Main-1605	Kirkland_Manholes-2632	276.84	Kirkland_Manholes-2631	265.77	241.2	4.59	8	PVC	0.01	1,510	4	12	15	1	SM14-Ex-EX295	
Kirkland_Main-1606	Kirkland_Manholes-2649	147.51	Kirkland_Manholes-2648	144.73	165.5	1.68	8	PVC	0.01	914	2	12	14	1.6		
Kirkland_Main-1607	Kirkland_Manholes-2648	144.73	Kirkland_Manholes-2647	132.46	109.5	11.21	8	PVC	0.01	2,360	3	18	21	0.9		
Kirkland_Main-1608	Kirkland_Manholes-2647	132.46	Kirkland_Manholes-2646	96.97	134.3	26.42	8	PVC	0.01	3,624	4	24	28	0.8		
Kirkland_Main-1609	Kirkland_Manholes-2646	96.97	Kirkland_Manholes-2645	79.04	111.3	16.11	8	PVC	0.01	2,830	6	30	36	1.3		
Kirkland_Main-1610	Kirkland_Manholes-2650	148.19	Kirkland_Manholes-2649	147.51	170.3	0.4	8	PVC	0.01	446	1	6	7	1.6		
Kirkland_Main-1611	Kirkland_Manholes-2651	121.43	Kirkland_Manholes-2652	57.18	251.5	25.55	8	PVC	0.01	3,564	2	6	8	0.2	SM14-Ex-EX292	
Kirkland_Main-1612	Kirkland_Manholes-2654	54.76	Kirkland_Manholes-2657	43.64	394.5	2.82	8	PVC	0.01	1,184	3	24	27	2.3	SM14-Ex-EX291	
Kirkland_Main-1613	Kirkland_Manholes-2653	56.99	Kirkland_Manholes-2654	54.76	13.8	16.21	8	PVC	0.01	2,839	3	18	21	0.8	SM14-Ex-EX292	
Kirkland_Main-1614	Kirkland_Manholes-2652	57.18	Kirkland_Manholes-2653	56.99	47.7	0.4	8	PVC	0.01	446	3	12	15	3.4	SM14-Ex-EX292	
Kirkland_Main-1615	Kirkland_Manholes-2657	43.64	Kirkland_Manholes-2656	33.93	250	3.88	8	PVC	0.01	1,389	4	30	35	2.5	SM14-Ex-EX291	
Kirkland_Main-1616	Kirkland_Manholes-2655	44.22	Kirkland_Manholes-2656	33.93	73.2	14.06	8	PVC	0.01	2,644	13	79	92	3.5	SM14-Ex-EX293	
Kirkland_Main-1617	Kirkland_Manholes-2656	33.93	Kirkland_Manholes-2658	29.62	118.6	3.63	8	PVC	0.01	1,344	17	115	132	9.9	SM14-Ex-EX291	
Kirkland_Main-1618	Kirkland_Manholes-2658	29.62	Kirkland_Manholes-2659	28.05	312.8	0.5	8	PVC	0.01	500	17	121	139	27.8	SM14-Ex-EX291	
Kirkland_Main-1619	Kirkland_Manholes-2659	28.05	Kirkland_Manholes-2660	26.87	281	0.42	8	PVC	0.01	457	19	128	146	32	SM14-Ex-EX291	
Kirkland_Main-1624	Kirkland_Manholes-2726	12.39	Kirkland_Manholes-2662	11.52	172.8	0.5	18	PVC	0.01	4,349	229	595	824	19	SM14-Ex-EX289	
Kirkland_Main-1625	Kirkland_Manholes-2666	55.28	Kirkland_Manholes-2667	55.1	203.4	0.09	18	PVC	0.01	1,823	109	322	431	23.6	SM14-Ex-EX222	
Kirkland_Main-1626	Kirkland_Manholes-2667	55.1	Kirkland_Manholes-2665	53.92	196.9	0.6	18	PVC	0.01	4,744	109	328	437	9.2	SM14-Ex-EX222	
Kirkland_Main-1627	Kirkland_Manholes-2665	53.92	Kirkland_Manholes-3102	53.77	398.5	0.04	18	PVC	0.01	1,189	109	334	443	37.2	SM14-Ex-EX222	
Kirkland_Main-1629	Kirkland_Manholes-2203	62.94	Kirkland_Manholes-3102	53.77	55.2	16.62	8	PVC	0.01	2,874	12	61	73	2.5	SM14-Ex-EX290	
Kirkland_Main-1633	Kirkland_Manholes-3101	52.44	Kirkland_Manholes-2663	50.64	51.5	3.5	18	PVC	0.01	11,462	124	431	555	4.8	SM14-Ex-EX222	
Kirkland_Main-1634	Kirkland_Manholes-250	115.74	Kirkland_Manholes-268	108.82	144.1	4.8	8	PVC	0.01	1,545	4	17	21	1.3	SM10	
Kirkland_Main-1635	Kirkland_Manholes-309	140.9	Kirkland_Manholes-308	114.39	431.7	6.14	8	PVC	0.01	1,747	3	9	12	0.7	SM10	
Kirkland_Main-1636	Kirkland_Manholes-308	114.39	Kirkland_Manholes-307	105.6	319	2.76	8	PVC	0.01	1,170	6	27	33	2.8	SM10	
Kirkland_Main-1637	Kirkland_Manholes-494	135.66	Kirkland_Manholes-307	105.6	436.1	6.89	8	PVC	0.01	1,851	3	9	12	0.6	SM10	
Kirkland_Main-1638	Kirkland_Manholes-241	14.7	Kirkland_Manholes-2765	13.19	59.4	2.54	18	PVC	0.01	9,768	305	1,122	1,428	14.6	SM3	
Kirkland_Main-1639	Kirkland_Manholes-240	17.1	Kirkland_Manholes-2765	13.19	342.3	1.14	12	PVC	0.01	2,222	140	420	861	38.8	SM14-Ex-EX42	
Kirkland_Main-1640	Kirkland_Manholes-239	27.77	Kirkland_Manholes-240	17.1	321.9	3.31	12	PVC	0.01	3,784	140	416	857	22.6	SM14-Ex-EX42	
Kirkland_Main-1641	Kirkland_Manholes-243	37.12	Kirkland_Manholes-239	27.77	158.7	5.89	12	PVC	0.01	5,046	139	407	847	16.8	SM14-Ex-EX38	
Kirkland_Main-1642	Kirkland_Manholes-244	47.57	Kirkland_Manholes-243	46.95	154.8	0.4	12	PVC	0.01	1,315	137	403	841	64	SM14-Ex-EX38	Drop Connection
Kirkland_Main-1643	Kirkland_Manholes-246	58	Kirkland_Manholes-244	47.57	272.3	3.83	8	PVC	0.01	1,380	137	399	837	60.6	SM14-Ex-EX38	
Kirkland_Main-1645	Kirkland_Manholes-901	304.32	Kirkland_Manholes-900	302.97	52	2.59	8	PVC	0.01	1,135	1	4	5	0.4		
Kirkland_Main-1646	Kirkland_Manholes-902	304.94	Kirkland_Manholes-900	302.97	236.8	0.83	8	PVC	0.01	643	1	4	5	0.7		
Kirkland_Main-1647	Kirkland_Manholes-900	302.97	Kirkland_Manholes-904	289.03	425.5	3.28	8	PVC	0.01	1,276	5	24	29	2.3		
Kirkland_Main-1648	Kirkland_Manholes-903	290.15	Kirkland_Manholes-904	289.03	62.2	1.8	8	PVC	0.01	946	11	60	71	7.5		
Kirkland_Main-1649	Kirkland_Manholes-904	289.03	Kirkland_Manholes-905	283.61	138.2	3.92	8	PVC	0.01	1,396	16	87	104	7.4		
Kirkland_Main-1650	Kirkland_Manholes-905	283.61	Kirkland_Manholes-912	277.93	121.5	4.68	8	PVC	0.01	1,525	16	91	108	7.1		
Kirkland_Main-1651	Kirkland_Manholes-906	293.01	Kirkland_Manholes-907	291.52	150.3	0.99	8	PVC	0.01	702	4	40	44	6.3		
Kirkland_Main-1652	Kirkland_Manholes-907	291.52	Kirkland_Manholes-908	290.53	109.9	0.9	8	PVC	0.01	669	5	44	49	7.3		
Kirkland_Main-1653	Kirkland_Manholes-908	290.53	Kirkland_Manholes-903	290.15	324	0.12	8	PVC	0.01	241	10	56	65	27.1		
Kirkland_Main-1654	Kirkland_Manholes-910	293.95	Kirkland_Manholes-908	290.53	193.3	1.77	8	PVC	0.01	938	4	8	12	1.3		
Kirkland_Main-1655	Kirkland_Manholes-909	297.88	Kirkland_Manholes-910	293.95	188.4	2.09	8	PVC	0.01	1,018	3	4	7	0.7		
Kirkland_Main-1656	Kirkland_Manholes-911	279.8	Kirkland_Manholes-912	277.93	207.2	0.9	8	PVC	0.01	670	2	4	6	0.9		
Kirkland_Main-1657	Kirkland_Manholes-912	277.93	Kirkland_Manholes-913	274.64	100.2	3.28	8	PVC	0.01	1,277	20	99	119	9.3		
Kirkland_Main-1658	Kirkland_Manholes-913	274.64	Kirkland_Manholes-917	265.16	288.9	3.28	8	PVC	0.01	1,277	21	103	124	9.7		
Kirkland_Main-1659	Kirkland_Manholes-890	280.21	Kirkland_Manholes-914	274.6	210.2	2.67	8	PVC	0.01	1,152	27	115	142	12.3		
Kirkland_Main-1660	Kirkland_Manholes-914	274.6	Kirkland_Manholes-915	272.06	86.6	2.93	8	PVC	0.01	1,207	30	127	157	13		
Kirkland_Main-1661	Kirkland_Manholes-915	272.06	Kirkland_Manholes-916	270.65	45.7	3.08	8	PVC	0.01	1,238	30	131	161	13		
Kirkland_Main-1662	Kirkland_Manholes-627	275.98	Kirkland_Manholes-914	274.6	212.1	0.65	8	PVC	0.01	569	2	8	10	1.8		
Kirkland_Main-1663	Kirkland_Manholes-916	270.65	Kirkland_Manholes-917	265.16	154.3	3.56	8	PVC	0.01	1,330	30	135	166	12.4		
Kirkland_Main-1664	Kirkland_Manholes-917	265.16	Kirkland_Manholes-918	264.4	332.4	0.23	12	PVC	0.01	994	52	246	299	30	SM14-Ex-EX136	
Kirkland_Main-1665	Kirkland_Manholes-918	264.4	Kirkland_Manholes-919	263.89	50.1	1.02	12	PVC	0.01	2,097	53	250	303	14.4	SM14-Ex-EX136	
Kirkland_Main-1666	Kirkland_Manholes-919	263.89	Kirkland_Manholes-920	263.16	175.4	0.42	12	PVC	0.01	1,341	53	254	307	22.9	SM14-Ex-EX136	
Kirkland_Main-1667	Kirkland_Manholes-687	264	Kirkland_Manholes-921	262.87	223.9	0.5	8	PVC	0.01	501	4	12	16	3.1		
Kirkland_Main-1668	Kirkland_Manholes-920	263.16	Kirkland_Manholes-921	262.87	116.1	0.25	12	PVC	0.01	1,039	54	258	312	30	SM14-Ex-EX136	

Existing with Proposed Improvements - Peak Hour Flow - Pipe Capacity Table

Label	Upstream Node	Upstream Invert Elevation (ft)	Downstream Node	Downstream Invert Elevation (ft)	Length (ft)	Slope (%)	Diameter (in)	Material	Manning's n	Design Capacity (gpm)	Domestic Flow (gpm)	I/I Flow (gpm)	Total Flow (gpm)	Percent Full (%)	CIP No.	Notes
Kirkland_Main-1669	Kirkland_Manholes-2064	426.84	Kirkland_Manholes-2670	399.73	295.3	9.18	8	PVC	0.01	2,136	1	4	5	0.2		
Kirkland_Main-1670	Kirkland_Manholes-921	262.87	Kirkland_Manholes-940	262.57	126.3	0.24	12	PVC	0.01	1,013	58	274	332	32.7	SM14-Ex-EX136	
Kirkland_Main-1671	Kirkland_Manholes-940	262.57	Kirkland_Manholes-939	261.56	302.2	0.33	12	PVC	0.01	1,200	61	278	339	28.3	SM14-Ex-EX136	
Kirkland_Main-1672	Kirkland_Manholes-939	261.56	Kirkland_Manholes-938	261.15	139.9	0.29	12	PVC	0.01	1,125	62	282	344	30.6	SM14-Ex-EX136	Drop Connection
Kirkland_Main-1673	Kirkland_Manholes-925	289.69	Kirkland_Manholes-924	268.15	361.6	5.96	8	PVC	0.01	1,721	13	60	73	4.2		
Kirkland_Main-1674	Kirkland_Manholes-924	268.15	Kirkland_Manholes-923	268.09	97.9	0.06	15	PVC	0.01	933	122	489	610	65.4	SM14-Ex-EX138	
Kirkland_Main-1675	Kirkland_Manholes-922	269.99	Kirkland_Manholes-923	268.09	235	0.81	8	PVC	0.01	634	1	4	5	0.7		
Kirkland_Main-1676	Kirkland_Manholes-923	268.09	Kirkland_Manholes-929	267.98	60	0.18	12	PVC	0.01	890	123	497	619	69.6	SM14-2035-DF10	
Kirkland_Main-1678	Kirkland_Manholes-927	307.71	Kirkland_Manholes-926	302.74	56.6	8.77	8	PVC	0.01	2,089	6	8	14	0.7		
Kirkland_Main-1679	Kirkland_Manholes-926	302.74	Kirkland_Manholes-925	289.69	296	4.41	8	PVC	0.01	1,481	12	56	68	4.6		
Kirkland_Main-1680	Kirkland_Manholes-928	294.43	Kirkland_Manholes-930	277.33	346.1	4.94	8	PVC	0.01	1,567	2	4	6	0.4		
Kirkland_Main-1681	Kirkland_Manholes-930	277.33	Kirkland_Manholes-929	267.98	33.8	27.65	8	PVC	0.01	3,707	3	8	11	0.3		
Kirkland_Main-1682	Kirkland_Manholes-933	269.3	Kirkland_Manholes-932	267	200	1.15	8	PVC	0.01	756	2	4	6	0.8		
Kirkland_Main-1683	Kirkland_Manholes-929	267.98	Kirkland_Manholes-931	267.3	153.6	0.44	12	PVC	0.01	1,383	126	509	635	45.9		
Kirkland_Main-1684	Kirkland_Manholes-931	267.3	Kirkland_Manholes-932	267	103.9	0.29	12	PVC	0.01	1,117	126	513	639	57.2		
Kirkland_Main-1685	Kirkland_Manholes-932	267	Kirkland_Manholes-934	266.31	201.7	0.34	12	PVC	0.01	1,216	129	521	649	53.4		
Kirkland_Main-1686	Kirkland_Manholes-950	293.99	Kirkland_Manholes-934	266.31	270.7	10.22	8	PVC	0.01	2,254	5	32	37	1.6		
Kirkland_Main-1688	Kirkland_Manholes-934	266.31	Kirkland_Manholes-935	265.1	223.8	0.54	12	PVC	0.01	1,529	136	556	692	45.3		
Kirkland_Main-1689	Kirkland_Manholes-937	264.43	Kirkland_Manholes-938	264.12	49.3	0.62	12	PVC	0.01	1,641	143	608	751	45.8		Drop Connection
Kirkland_Main-1690	Kirkland_Manholes-936	264.57	Kirkland_Manholes-937	264.43	21.7	0.66	12	PVC	0.01	1,686	137	564	701	41.6		
Kirkland_Main-1691	Kirkland_Manholes-935	265.1	Kirkland_Manholes-936	264.57	71.3	0.74	12	PVC	0.01	1,788	137	560	697	39		
Kirkland_Main-1692	Kirkland_Manholes-938	257.09	Kirkland_Manholes-666	254.95	392.8	0.55	15	PVC	0.01	2,784	206	894	1,100	39.5		
Kirkland_Main-1693	Kirkland_Manholes-941	287.52	Kirkland_Manholes-937	264.43	281.4	8.21	8	PVC	0.01	2,020	6	40	46	2.3		
Kirkland_Main-1694	Kirkland_Manholes-942	300.01	Kirkland_Manholes-941	287.52	399.1	3.13	8	PVC	0.01	1,247	5	36	41	3.3		
Kirkland_Main-1695	Kirkland_Manholes-943	306.11	Kirkland_Manholes-944	304.9	190.1	0.64	8	PVC	0.01	563	1	4	5	0.9	SM14-Ex-EX137	
Kirkland_Main-1696	Kirkland_Manholes-946	335.98	Kirkland_Manholes-945	330.63	152.5	3.51	8	PVC	0.01	1,321	1	4	5	0.4		
Kirkland_Main-1697	Kirkland_Manholes-945	330.63	Kirkland_Manholes-944	304.9	238	10.81	8	PVC	0.01	2,318	2	8	10	0.4		
Kirkland_Main-1698	Kirkland_Manholes-947	299.2	Kirkland_Manholes-948	296.38	132	2.14	8	PVC	0.01	1,031	1	4	5	0.5	SM14-Ex-EX137	
Kirkland_Main-1699	Kirkland_Manholes-944	304.9	Kirkland_Manholes-948	296.38	218.3	3.9	8	PVC	0.01	1,393	3	16	19	1.3	SM14-Ex-EX137	
Kirkland_Main-1701	Kirkland_Manholes-949	295.21	Kirkland_Manholes-950	293.99	49	2.49	8	PVC	0.01	1,112	4	28	32	2.9		
Kirkland_Main-1702	Kirkland_Manholes-948	296.38	Kirkland_Manholes-949	295.21	143.9	0.81	8	PVC	0.01	636	4	24	28	4.4	SM14-Ex-EX137	
Kirkland_Main-1703	Kirkland_Manholes-951	321.2	Kirkland_Manholes-942	300.01	232.8	9.1	8	PVC	0.01	2,127	1	8	9	0.4		
Kirkland_Main-1704	Kirkland_Manholes-952	325.62	Kirkland_Manholes-951	321.2	323.7	1.37	8	PVC	0.01	824	1	4	5	0.6		
Kirkland_Main-1705	Kirkland_Manholes-953	318.51	Kirkland_Manholes-954	318.45	75.8	0.08	8	PVC	0.01	198	1	4	5	2.3		
Kirkland_Main-1706	Kirkland_Manholes-954	318.45	Kirkland_Manholes-955	318.15	133.7	0.22	8	PVC	0.01	334	1	8	9	2.7		
Kirkland_Main-1707	Kirkland_Manholes-1546	284.43	Kirkland_Manholes-1545	272.4	160.7	7.49	8	PVC	0.01	1,929	8	40	48	2.5	SM14-Ex-EX121	
Kirkland_Main-1708	Kirkland_Manholes-750	289.43	Kirkland_Manholes-1546	284.43	152.8	3.27	8	PVC	0.01	1,275	2	8	10	0.8	SM14-Ex-EX121	
Kirkland_Main-1709	Kirkland_Manholes-1553	308.15	Kirkland_Manholes-1546	284.43	340	6.98	8	PVC	0.01	1,862	6	28	33	1.8	SM14-Ex-EX122	
Kirkland_Main-1710	Kirkland_Manholes-751	298.52	Kirkland_Manholes-750	289.43	402.2	2.26	8	PVC	0.01	1,060	2	4	5	0.5	SM14-Ex-EX121	
Kirkland_Main-1711	Kirkland_Manholes-748	311.92	Kirkland_Manholes-752	265.45	362.2	12.83	8	PVC	0.01	2,525	19	56	75	3	SM14-Ex-EX71	
Kirkland_Main-1712	Kirkland_Manholes-753	247.15	Kirkland_Manholes-754	246.56	209.3	0.28	8	PVC	0.01	374	2	4	6	1.6		
Kirkland_Main-1713	Kirkland_Manholes-1355	420.81	Kirkland_Manholes-1357	417.32	183.1	1.91	8	PVC	0.01	973	7	36	43	4.4		
Kirkland_Main-1714	Kirkland_Manholes-1356	418.13	Kirkland_Manholes-1357	417.32	41.8	1.94	8	PVC	0.01	981	1	4	5	0.5	SM14-Ex-EX180	
Kirkland_Main-1715	Kirkland_Manholes-1357	417.32	Kirkland_Manholes-1358	410.38	295.5	2.35	8	PVC	0.01	1,080	10	44	53	4.9	SM14-Ex-EX180	
Kirkland_Main-1716	Kirkland_Manholes-1358	410.38	Kirkland_Manholes-1359	407.6	322.3	0.86	8	PVC	0.01	655	11	48	58	8.9	SM14-Ex-EX180	
Kirkland_Main-1717	Kirkland_Manholes-1359	407.6	Kirkland_Manholes-1364	404.91	317.2	0.85	8	PVC	0.01	649	13	52	64	9.9	SM14-Ex-EX180	
Kirkland_Main-1718	Kirkland_Manholes-1360	392.45	Kirkland_Manholes-1361	390.34	26.4	7.99	8	PVC	0.01	1,993	5	20	25	1.2	SM14-Ex-EX179	
Kirkland_Main-1719	Kirkland_Manholes-1361	390.34	Kirkland_Manholes-1371	389.7	160.2	0.4	8	PVC	0.01	446	19	79	98	22		Drop Connection
Kirkland_Main-1720	Kirkland_Manholes-1365	376.9	Kirkland_Manholes-1371	376.15	121.9	0.62	8	PVC	0.01	553	43	83	126	22.8		
Kirkland_Main-1721	Kirkland_Manholes-1366	377.95	Kirkland_Manholes-1365	376.9	166.8	0.63	8	PVC	0.01	559	43	79	122	21.9		
Kirkland_Main-1722	Kirkland_Manholes-1364	404.91	Kirkland_Manholes-1361	390.34	354.3	4.11	8	PVC	0.01	1,430	14	56	69	4.9	SM14-Ex-EX180	
Kirkland_Main-1723	Kirkland_Manholes-1362	399.37	Kirkland_Manholes-1360	392.45	312.9	2.21	8	PVC	0.01	1,049	5	16	21	2	SM14-Ex-EX179	
Kirkland_Main-1724	Kirkland_Manholes-1363	403.55	Kirkland_Manholes-1362	399.37	238	1.76	8	PVC	0.01	934	3	12	15	1.6	SM14-Ex-EX179	
Kirkland_Main-1726	Kirkland_Manholes-1367	392.51	Kirkland_Manholes-1906	388.2	267.7	1.61	8	PVC	0.01	895	7	4	11	1.2		
Kirkland_Main-1727	Kirkland_Manholes-1368	393.26	Kirkland_Manholes-1369	387.01	105.4	5.93	8	PVC	0.01	1,717	1	4	5	0.3	SM14-Ex-EX178	
Kirkland_Main-1728	Kirkland_Manholes-1369	387.01	Kirkland_Manholes-1370	385.7	133.5	0.98	8	PVC	0.01	698	1	8	9	1.3	SM14-Ex-EX178	
Kirkland_Main-1729	Kirkland_Manholes-1370	385.7	Kirkland_Manholes-1371	376.15	179.2	5.33	8	PVC	0.01	1,628	1	12	13	0.8	SM14-Ex-EX178	
Kirkland_Main-1730	Kirkland_Manholes-534	432.55	Kirkland_Manholes-1372	427.9	355.1	1.31	8	PVC	0.01	807	44	139	183	22.7	SM14-Ex-EX218	
Kirkland_Main-1731	Kirkland_Manholes-560	483.4	Kirkland_Manholes-561	481.3	94.5	2.22	8	PVC	0.01	1,051	3	8	11	1		
Kirkland_Main-1733	Kirkland_Manholes-561	481.3	Kirkland_Manholes-1374	479.93	141.7	0.97	8	PVC	0.01	693	4	12	16	2.3		
Kirkland_Main-1734	Kirkland_Manholes-1376	483.23	Kirkland_Manholes-1375	479.6	272.8	1.33	8	PVC	0.01	813	2	4	6	0.8		
Kirkland_Main-1735	Kirkland_Manholes-1375	479.6	Kirkland_Manholes-1377	478.89	93.1	0.76	8	PVC	0.01	616	6	24	30	4.9		

Existing with Proposed Improvements - Peak Hour Flow - Pipe Capacity Table

Label	Upstream Node	Upstream Invert Elevation (ft)	Downstream Node	Downstream Invert Elevation (ft)	Length (ft)	Slope (%)	Diameter (in)	Material	Manning's n	Design Capacity (gpm)	Domestic Flow (gpm)	I/I Flow (gpm)	Total Flow (gpm)	Percent Full (%)	CIP No.	Notes
Kirkland_Main-1736	Kirkland_Manholes-1377	478.89	Kirkland_Manholes-1378	472.9	259	2.31	8	PVC	0.01	1,072	7	28	35	3.3		
Kirkland_Main-1737	Kirkland_Manholes-1378	472.9	Kirkland_Manholes-1379	471.21	302	0.56	8	PVC	0.01	527	11	32	42	8		
Kirkland_Main-1738	Kirkland_Manholes-1374	479.93	Kirkland_Manholes-1375	479.6	219.3	0.15	8	PVC	0.01	274	4	16	20	7.2		
Kirkland_Main-1739	Kirkland_Manholes-1379	471.21	Kirkland_Manholes-564	469.28	271.7	0.71	8	PVC	0.01	594	11	36	47	7.9		
Kirkland_Main-1740	Kirkland_Manholes-340	235.81	Kirkland_Manholes-341	235.59	47.2	0.47	8	PVC	0.01	482	13	79	93	19.3		
Kirkland_Main-1741	Kirkland_Manholes-341	235.59	Kirkland_Manholes-342	234.97	31.7	1.95	8	PVC	0.01	986	18	127	146	14.8	SM14-Ex-EX49	
Kirkland_Main-1742	Kirkland_Manholes-342	234.97	Kirkland_Manholes-351	234.93	111.2	0.04	12	PVC	0.01	394	18	131	150	37.9	SM14-Ex-EX49	
Kirkland_Main-1743	Kirkland_Manholes-345	279.43	Kirkland_Manholes-344	279.2	57.3	0.4	8	PVC	0.01	446	4	8	12	2.7		
Kirkland_Main-1744	Kirkland_Manholes-344	279.2	Kirkland_Manholes-346	254.2	328.7	7.61	8	PVC	0.01	1,944	5	12	17	0.9		
Kirkland_Main-1745	Kirkland_Manholes-346	254.2	Kirkland_Manholes-347	250.02	240.3	1.74	8	PVC	0.01	930	6	16	22	2.4		
Kirkland_Main-1746	Kirkland_Manholes-348	251.65	Kirkland_Manholes-347	250.02	50.6	3.22	8	PVC	0.01	1,266	2	4	6	0.5		
Kirkland_Main-1747	Kirkland_Manholes-347	250.02	Kirkland_Manholes-349	238.18	204.7	5.78	8	PVC	0.01	1,695	9	24	33	2		
Kirkland_Main-1748	Kirkland_Manholes-349	238.18	Kirkland_Manholes-350	235.63	111.7	2.28	8	PVC	0.01	1,065	10	28	38	3.6		
Kirkland_Main-1749	Kirkland_Manholes-1666	89.71	Kirkland_Manholes-1673	84.18	111.9	4.94	8	PVC	0.01	1,568	42	148	190	12.2		
Kirkland_Main-1750	Kirkland_Manholes-1672	91.63	Kirkland_Manholes-1666	89.71	163.9	1.17	8	PVC	0.01	763	1	8	9	1.2		
Kirkland_Main-1751	Kirkland_Manholes-1671	101.9	Kirkland_Manholes-1667	101.23	167.6	0.4	8	PVC	0.01	446	5	8	13	3		
Kirkland_Main-1752	Kirkland_Manholes-1669	132.92	Kirkland_Manholes-1668	119.52	315.3	4.25	8	PVC	0.01	1,454	3	8	11	0.8		
Kirkland_Main-1753	Kirkland_Manholes-1670	121.1	Kirkland_Manholes-1668	119.52	161.1	0.98	8	PVC	0.01	698	3	8	11	1.6		
Kirkland_Main-1754	Kirkland_Manholes-1673	84.18	Kirkland_Manholes-1674	78.95	158.5	3.3	8	PVC	0.01	1,281	42	156	199	15.5		
Kirkland_Main-1755	Kirkland_Manholes-1677	88.12	Kirkland_Manholes-1674	87.91	51.7	0.4	8	PVC	0.01	446	21	41	62	14		Drop Connection
Kirkland_Main-1756	Kirkland_Manholes-1675	105.24	Kirkland_Manholes-1676	98.96	116.6	5.39	8	PVC	0.01	1,636	3	8	12	0.7		
Kirkland_Main-1757	Kirkland_Manholes-859	309.2	Kirkland_Manholes-865	308.29	290.7	0.31	8	PVC	0.01	394	15	75	91	23.1	SM14-Ex-EX51	
Kirkland_Main-1758	Kirkland_Manholes-860	317.71	Kirkland_Manholes-859	309.2	202.9	4.19	8	PVC	0.01	1,444	12	68	80	5.5	SM14-Ex-EX52	
Kirkland_Main-1759	Kirkland_Manholes-861	327.02	Kirkland_Manholes-860	317.71	236.9	3.93	8	PVC	0.01	1,398	10	64	74	5.3	SM14-Ex-EX52	
Kirkland_Main-1760	Kirkland_Manholes-856	333.21	Kirkland_Manholes-861	327.02	162.2	3.82	8	PVC	0.01	1,377	9	60	69	5	SM14-Ex-EX52	
Kirkland_Main-1761	Kirkland_Manholes-862	335.56	Kirkland_Manholes-856	333.21	185.2	1.27	8	PVC	0.01	794	2	4	6	0.7	SM14-Ex-EX53	
Kirkland_Main-1762	Kirkland_Manholes-2254	240.28	Kirkland_Manholes-2253	239.74	205.7	0.26	8	PVC	0.01	361	0	4	4	1.1	SM14-Ex-EX247	
Kirkland_Main-1763	Kirkland_Manholes-863	341.24	Kirkland_Manholes-864	334.74	171.5	3.79	8	PVC	0.01	1,373	1	4	5	0.4	SM14-Ex-EX50	
Kirkland_Main-1764	Kirkland_Manholes-864	334.74	Kirkland_Manholes-865	308.29	391.4	6.76	8	PVC	0.01	1,833	3	8	11	0.6	SM14-Ex-EX50	
Kirkland_Main-1765	Kirkland_Manholes-866	314.35	Kirkland_Manholes-865	308.29	226.5	2.68	8	PVC	0.01	1,153	7	28	35	3	SM14-Ex-EX35	
Kirkland_Main-1766	Kirkland_Manholes-865	308.29	Kirkland_Manholes-392	305	233.2	1.41	8	PVC	0.01	837	27	115	143	17	SM14-Ex-EX50	
Kirkland_Main-1767	Kirkland_Manholes-867	319	Kirkland_Manholes-866	314.35	119.3	3.9	8	PVC	0.01	1,392	6	24	29	2.1	SM14-Ex-EX35	
Kirkland_Main-1768	Kirkland_Manholes-868	321.84	Kirkland_Manholes-867	319	90.7	3.13	8	PVC	0.01	1,247	5	20	25	2	SM14-Ex-EX35	
Kirkland_Main-1769	Kirkland_Manholes-869	325.94	Kirkland_Manholes-868	321.84	101.3	4.05	8	PVC	0.01	1,418	4	16	20	1.4	SM14-Ex-EX35	
Kirkland_Main-1770	Kirkland_Manholes-870	327.4	Kirkland_Manholes-869	325.94	99.3	1.47	8	PVC	0.01	855	2	4	5	0.6	SM14-Ex-EX35	
Kirkland_Main-1771	Kirkland_Manholes-871	340.54	Kirkland_Manholes-872	339.98	74.2	0.75	8	PVC	0.01	612	1	4	5	0.8	SM14-Ex-EX35	
Kirkland_Main-1772	Kirkland_Manholes-872	339.98	Kirkland_Manholes-869	325.94	265.2	5.29	8	PVC	0.01	1,622	2	8	10	0.6	SM14-Ex-EX35	
Kirkland_Main-1773	Kirkland_Manholes-874	310.68	Kirkland_Manholes-382	308.23	108.1	2.27	8	PVC	0.01	1,062	1	4	5	0.5		
Kirkland_Main-1774	Kirkland_Manholes-875	310.4	Kirkland_Manholes-1073	302.05	254.5	3.28	8	PVC	0.01	1,277	3	4	7	0.5		
Kirkland_Main-1775	Kirkland_Manholes-2900	302.3	Kirkland_Manholes-876	301.25	160.8	0.65	8	PVC	0.01	570	6	40	46	8		
Kirkland_Main-1776	Kirkland_Manholes-876	301.25	Kirkland_Manholes-337	291.09	336.8	3.02	8	PVC	0.01	1,225	7	60	67	5.4		
Kirkland_Main-1777	Kirkland_Manholes-877	295.2	Kirkland_Manholes-884	291.06	114.3	3.62	8	PVC	0.01	1,342	0	4	4	0.3		
Kirkland_Main-1778	Kirkland_Manholes-884	291.06	Kirkland_Manholes-881	290.87	47	0.4	8	PVC	0.01	446	3	12	15	3.3		
Kirkland_Main-1779	Kirkland_Manholes-705	293.8	Kirkland_Manholes-884	291.06	213.2	1.29	8	PVC	0.01	800	2	4	6	0.7		
Kirkland_Main-1780	Kirkland_Manholes-881	290.87	Kirkland_Manholes-885	286.75	194.6	2.12	8	PVC	0.01	1,026	11	60	71	6.9		
Kirkland_Main-1781	Kirkland_Manholes-880	294.11	Kirkland_Manholes-881	290.87	199.3	1.63	8	PVC	0.01	899	8	44	52	5.8		
Kirkland_Main-1782	Kirkland_Manholes-879	310.92	Kirkland_Manholes-880	294.11	360	4.67	8	PVC	0.01	1,524	7	40	46	3		
Kirkland_Main-1783	Kirkland_Manholes-878	325.66	Kirkland_Manholes-879	310.92	320.8	4.59	8	PVC	0.01	1,511	5	36	40	2.7		
Kirkland_Main-1784	Kirkland_Manholes-886	291.6	Kirkland_Manholes-885	286.75	178.8	2.71	8	PVC	0.01	1,161	3	12	15	1.3		
Kirkland_Main-1785	Kirkland_Manholes-887	294.74	Kirkland_Manholes-886	291.6	177.9	1.77	8	PVC	0.01	937	2	8	10	1		
Kirkland_Main-1786	Kirkland_Manholes-888	307.6	Kirkland_Manholes-887	294.74	260	4.95	8	PVC	0.01	1,568	1	4	5	0.3		
Kirkland_Main-1788	Kirkland_Manholes-885	286.75	Kirkland_Manholes-889	285.3	34.9	4.16	8	PVC	0.01	1,437	14	75	90	6.2		
Kirkland_Main-1789	Kirkland_Manholes-336	286.9	Kirkland_Manholes-889	285.3	212.5	0.75	8	PVC	0.01	612	2	4	6	0.9		
Kirkland_Main-1790	Kirkland_Manholes-889	285.3	Kirkland_Manholes-890	280.21	299.8	1.7	8	PVC	0.01	919	17	83	100	10.9		
Kirkland_Main-1791	Kirkland_Manholes-891	282.85	Kirkland_Manholes-890	280.21	269.2	0.98	8	PVC	0.01	698	9	28	37	5.2		
Kirkland_Main-1792	Kirkland_Manholes-892	286	Kirkland_Manholes-891	282.85	80.7	3.9	8	PVC	0.01	1,393	7	24	31	2.2		
Kirkland_Main-1793	Kirkland_Manholes-895	303.91	Kirkland_Manholes-896	303.5	71	0.58	8	PVC	0.01	536	1	4	5	0.9		
Kirkland_Main-1794	Kirkland_Manholes-896	303.5	Kirkland_Manholes-893	293.25	259.5	3.95	8	PVC	0.01	1,401	2	12	14	1		
Kirkland_Main-1795	Kirkland_Manholes-894	293.53	Kirkland_Manholes-893	293.25	69.8	0.4	8	PVC	0.01	446	1	4	5	1.2		
Kirkland_Main-1796	Kirkland_Manholes-893	293.25	Kirkland_Manholes-892	286	208.9	3.47	8	PVC	0.01	1,314	5	20	25	1.9		
Kirkland_Main-1797	Kirkland_Manholes-897	317.07	Kirkland_Manholes-896	303.5	263.1	5.16	8	PVC	0.01	1,601	1	4	5	0.3		
Kirkland_Main-1798	Kirkland_Manholes-955	318.15	Kirkland_Manholes-956	317.42	90.2	0.81	8	PVC	0.01	634	1	12	13	2.1		

Existing with Proposed Improvements - Peak Hour Flow - Pipe Capacity Table

Label	Upstream Node	Upstream Invert Elevation (ft)	Downstream Node	Downstream Invert Elevation (ft)	Length (ft)	Slope (%)	Diameter (in)	Material	Manning's n	Design Capacity (gpm)	Domestic Flow (gpm)	I/I Flow (gpm)	Total Flow (gpm)	Percent Full (%)	CIP No.	Notes
Kirkland_Main-1799	Kirkland_Manholes-956	317.42	Kirkland_Manholes-957	315.92	143.6	1.04	8	PVC	0.01	720	2	16	18	2.5		
Kirkland_Main-1800	Kirkland_Manholes-1294	129.1	Kirkland_Manholes-1295	119.7	303.2	3.1	8	PVC	0.01	1,242	3	8	11	0.9	SM14-Ex-EX115	
Kirkland_Main-1801	Kirkland_Manholes-1296	129.32	Kirkland_Manholes-1295	119.7	314.4	3.06	8	PVC	0.01	1,233	61	296	358	29	SM6	
Kirkland_Main-1802	Kirkland_Manholes-1301	241.1	Kirkland_Manholes-1300	221.25	201.1	9.87	8	PVC	0.01	2,215	3	16	20	0.9	SM14-Ex-EX98	
Kirkland_Main-1803	Kirkland_Manholes-1299	227.62	Kirkland_Manholes-1300	221.25	159.1	4	8	PVC	0.01	1,411	2	8	10	0.7	SM14-Ex-EX101	
Kirkland_Main-1804	Kirkland_Manholes-1300	221.25	Kirkland_Manholes-1250	210.15	248.6	4.47	8	PVC	0.01	1,490	6	33	38	2.6	SM14-Ex-EX101	
Kirkland_Main-1805	Kirkland_Manholes-1303	126.2	Kirkland_Manholes-1295	119.7	386.9	1.68	8	PVC	0.01	914	3	8	11	1.2	SM14-Ex-EX115	
Kirkland_Main-1806	Kirkland_Manholes-1304	180.12	Kirkland_Manholes-1258	154.28	295.6	8.74	8	PVC	0.01	2,084	5	25	30	1.4	SM14-Ex-EX106	
Kirkland_Main-1807	Kirkland_Manholes-1306	225.07	Kirkland_Manholes-227	223.31	140.1	1.26	8	PVC	0.01	790	6	26	32	4		
Kirkland_Main-1808	Kirkland_Manholes-1309	233.16	Kirkland_Manholes-1308	229.72	344.3	1	8	PVC	0.01	705	1	8	9	1.3		
Kirkland_Main-1809	Kirkland_Manholes-1308	229.72	Kirkland_Manholes-1307	211.15	175.8	10.56	8	PVC	0.01	2,292	4	16	20	0.9		
Kirkland_Main-1810	Kirkland_Manholes-1307	211.15	Kirkland_Manholes-1252	181.71	226.9	12.97	8	PVC	0.01	2,540	7	25	31	1.2	SM14-Ex-EX100	
Kirkland_Main-1812	Kirkland_Manholes-1275	185.58	Kirkland_Manholes-1276	172.95	322.8	3.91	8	PVC	0.01	1,395	2	8	11	0.8		
Kirkland_Main-1813	Kirkland_Manholes-1279	163.99	Kirkland_Manholes-1278	160.09	249.2	1.56	8	PVC	0.01	882	5	25	29	3.3	SM14-Ex-EX103	
Kirkland_Main-1814	Kirkland_Manholes-1597	180.84	Kirkland_Manholes-1601	173.67	138.4	5.18	8	PVC	0.01	1,605	53	159	212	13.2	SM14-Ex-EX121	
Kirkland_Main-1815	Kirkland_Manholes-1603	202.22	Kirkland_Manholes-1602	196.74	63.2	8.68	8	PVC	0.01	2,077	65	226	291	14	SM14-Ex-EX172	
Kirkland_Main-1817	Kirkland_Manholes-1570	121.83	Kirkland_Manholes-1604	117.22	301	1.53	8	PVC	0.01	872	3	8	12	1.3	SM14-Ex-EX120	
Kirkland_Main-1818	Kirkland_Manholes-1604	117.22	Kirkland_Manholes-1608	108.38	320.2	2.76	8	PVC	0.01	1,171	7	49	56	4.8	SM14-Ex-EX119	
Kirkland_Main-1823	Kirkland_Manholes-1607	115.82	Kirkland_Manholes-1608	108.38	281.1	2.65	8	PVC	0.01	1,147	1	8	9	0.8		
Kirkland_Main-1824	Kirkland_Manholes-1608	108.38	Kirkland_Manholes-1609	99.56	224.5	3.93	8	PVC	0.01	1,397	8	66	74	5.3	SM14-Ex-EX119	
Kirkland_Main-1825	Kirkland_Manholes-1609	99.56	Kirkland_Manholes-1610	98.61	103.1	0.92	8	PVC	0.01	677	8	74	82	12.2	SM14-Ex-EX119	
Kirkland_Main-1826	Kirkland_Manholes-1615	109.23	Kirkland_Manholes-1610	98.61	252.9	4.2	8	PVC	0.01	1,445	3	16	20	1.4		
Kirkland_Main-1827	Kirkland_Manholes-1610	98.61	Kirkland_Manholes-1611	98.01	137.6	0.44	8	PVC	0.01	466	11	99	110	23.7	SM14-Ex-EX160	
Kirkland_Main-1828	Kirkland_Manholes-1611	98.01	Kirkland_Manholes-1614	91.09	116.4	5.94	8	PVC	0.01	1,719	11	107	118	6.9	SM14-Ex-EX167	
Kirkland_Main-1830	Kirkland_Manholes-350	235.63	Kirkland_Manholes-351	234.93	99	0.71	8	PVC	0.01	593	12	32	43	7.3		
Kirkland_Main-1831	Kirkland_Manholes-351	234.93	Kirkland_Manholes-352	234.2	197.8	0.37	8	PVC	0.01	428	30	167	197	46		
Kirkland_Main-1832	Kirkland_Manholes-353	237.24	Kirkland_Manholes-352	234.2	58.3	5.21	8	PVC	0.01	1,609	0	8	8	0.5		
Kirkland_Main-1833	Kirkland_Manholes-354	240.05	Kirkland_Manholes-353	237.24	111.3	2.52	8	PVC	0.01	1,120	0	4	4	0.4		
Kirkland_Main-1834	Kirkland_Manholes-355	245.23	Kirkland_Manholes-357	224.18	289.7	7.27	8	PVC	0.01	1,901	1	4	5	0.2		
Kirkland_Main-1835	Kirkland_Manholes-357	224.18	Kirkland_Manholes-356	218.57	38.2	14.7	8	PVC	0.01	2,703	1	8	9	0.3		
Kirkland_Main-1836	Kirkland_Manholes-356	218.57	Kirkland_Manholes-358	217.4	168.8	0.69	21	PVC	0.01	7,697	528	1,927	2,455	31.9		
Kirkland_Main-1837	Kirkland_Manholes-358	217.4	Kirkland_Manholes-362	216.81	209.2	0.28	21	PVC	0.01	4,910	528	1,931	2,459	50.1		
Kirkland_Main-1838	Kirkland_Manholes-365	215.67	Kirkland_Manholes-366	214.9	145.3	0.53	8	PVC	0.01	513	1	4	5	1		
Kirkland_Main-1839	Kirkland_Manholes-366	214.9	Kirkland_Manholes-367	213.02	57.5	3.27	8	PVC	0.01	1,275	1	8	9	0.7		
Kirkland_Main-1840	Kirkland_Manholes-364	215.51	Kirkland_Manholes-367	213.02	231.6	1.07	18	PVC	0.01	6,354	538	1,987	2,525	39.7		
Kirkland_Main-1841	Kirkland_Manholes-363	216.4	Kirkland_Manholes-3048	215.92	195.5	0.25	21	PVC	0.01	4,581	533	1,951	2,484	54.2		
Kirkland_Main-1842	Kirkland_Manholes-361	216.74	Kirkland_Manholes-363	216.4	169.2	0.2	21	PVC	0.01	4,140	533	1,947	2,480	59.9		
Kirkland_Main-1843	Kirkland_Manholes-359	233.48	Kirkland_Manholes-360	230.84	309.4	0.85	8	PVC	0.01	651	3	4	7	1		
Kirkland_Main-1844	Kirkland_Manholes-360	230.84	Kirkland_Manholes-361	216.74	103.8	13.58	8	PVC	0.01	2,599	4	8	12	0.5		
Kirkland_Main-1845	Kirkland_Manholes-400	274.94	Kirkland_Manholes-399	268.35	106.2	6.21	8	PVC	0.01	1,757	1	4	5	0.3		
Kirkland_Main-1846	Kirkland_Manholes-399	268.35	Kirkland_Manholes-394	266.89	274.5	0.53	8	PVC	0.01	514	3	8	11	2.1		
Kirkland_Main-1847	Kirkland_Manholes-405	259.21	Kirkland_Manholes-404	259.2	31.6	0.03	8	PVC	0.01	125	0	4	4	3.2		
Kirkland_Main-1848	Kirkland_Manholes-404	259.2	Kirkland_Manholes-403	257.79	99.7	1.41	8	PVC	0.01	839	0	8	8	1		
Kirkland_Main-1849	Kirkland_Manholes-403	257.79	Kirkland_Manholes-402	257.52	55.3	0.49	8	PVC	0.01	493	1	12	12	2.5		
Kirkland_Main-1850	Kirkland_Manholes-402	257.52	Kirkland_Manholes-401	256.8	97.3	0.74	8	PVC	0.01	607	1	16	17	2.8		
Kirkland_Main-1851	Kirkland_Manholes-401	256.8	Kirkland_Manholes-395	253.88	284.1	1.03	8	PVC	0.01	715	2	20	22	3.1		
Kirkland_Main-1852	Kirkland_Manholes-406	288.66	Kirkland_Manholes-393	288.03	160.6	0.39	8	PVC	0.01	442	2	4	6	1.3		
Kirkland_Main-1853	Kirkland_Manholes-410	278.41	Kirkland_Manholes-409	264.84	185.6	7.31	8	PVC	0.01	1,906	1	4	5	0.3		
Kirkland_Main-1854	Kirkland_Manholes-425	290.3	Kirkland_Manholes-420	281.46	112.7	7.84	8	PVC	0.01	1,974	6	28	34	1.7		
Kirkland_Main-1855	Kirkland_Manholes-370	206.64	Kirkland_Manholes-2869	204.84	75.1	2.4	18	PVC	0.01	9,487	548	2,038	2,587	27.3		
Kirkland_Main-1856	Kirkland_Manholes-436	58.61	Kirkland_Manholes-437	58.56	24.6	0.22	15	PVC	0.01	1,769	197	644	842	47.6	SM14-Ex-EX30	
Kirkland_Main-1857	Kirkland_Manholes-437	58.56	Kirkland_Manholes-188	58.06	273	0.18	15	PVC	0.01	1,613	202	657	859	53.2	SM14-Ex-EX30	
Kirkland_Main-1858	Kirkland_Manholes-450	130.07	Kirkland_Manholes-448	127.19	147.1	1.96	8	PVC	0.01	987	4	17	21	2.1		
Kirkland_Main-1859	Kirkland_Manholes-448	127.19	Kirkland_Manholes-449	124.43	143	1.93	8	PVC	0.01	979	4	21	25	2.5		
Kirkland_Main-1860	Kirkland_Manholes-449	124.43	Kirkland_Manholes-446	123.86	143.4	0.4	8	PVC	0.01	446	4	26	29	6.5		Drop Connection
Kirkland_Main-1861	Kirkland_Manholes-447	95.3	Kirkland_Manholes-446	94.25	125.1	0.84	8	PVC	0.01	646	0	4	4	0.7		
Kirkland_Main-1862	Kirkland_Manholes-445	128.4	Kirkland_Manholes-444	92.89	173.2	20.5	8	PVC	0.01	3,192	0	4	4	0.1		
Kirkland_Main-1863	Kirkland_Manholes-446	94.25	Kirkland_Manholes-444	92.89	143.2	0.95	8	PVC	0.01	687	4	34	38	5.5		
Kirkland_Main-1864	Kirkland_Manholes-1522	291.35	Kirkland_Manholes-145	271.65	161.3	12.21	8	PVC	0.01	2,464	2	8	10	0.4		
Kirkland_Main-1865	Kirkland_Manholes-145	271.65	Kirkland_Manholes-1315	270.9	108.1	0.69	8	PVC	0.01	587	14	48	62	10.5		
Kirkland_Main-1866	Kirkland_Manholes-1314	312.02	Kirkland_Manholes-1522	291.35	177.8	11.62	8	PVC	0.01	2,404	1	4	5	0.2		
Kirkland_Main-1867	Kirkland_Manholes-1515	261.7	Kirkland_Manholes-1516	259.7	167.2	1.2	8	PVC	0.01	771	33	147	180	23.4	SM14-Ex-EX131	

Existing with Proposed Improvements - Peak Hour Flow - Pipe Capacity Table

Label	Upstream Node	Upstream Invert Elevation (ft)	Downstream Node	Downstream Invert Elevation (ft)	Length (ft)	Slope (%)	Diameter (in)	Material	Manning's n	Design Capacity (gpm)	Domestic Flow (gpm)	I/I Flow (gpm)	Total Flow (gpm)	Percent Full (%)	CIP No.	Notes
Kirkland_Main-1868	Kirkland_Manholes-1516	259.7	Kirkland_Manholes-1593	256.67	397.6	0.76	8	PVC	0.01	615	37	151	188	30.5	SM14-Ex-EX131	
Kirkland_Main-1869	Kirkland_Manholes-1520	262.79	Kirkland_Manholes-1517	262.15	299	0.21	8	PVC	0.01	326	2	4	6	1.7	SM14-Ex-EX129	
Kirkland_Main-1870	Kirkland_Manholes-1518	277.88	Kirkland_Manholes-1517	262.15	157.4	10	8	PVC	0.01	2,229	12	28	40	1.8	SM14-Ex-EX124	
Kirkland_Main-1871	Kirkland_Manholes-1517	262.15	Kirkland_Manholes-1592	255.76	316.1	2.02	8	PVC	0.01	1,002	14	36	50	5	SM14-Ex-EX124	
Kirkland_Main-1872	Kirkland_Manholes-1519	265	Kirkland_Manholes-1521	258.62	235.2	2.71	8	PVC	0.01	1,161	1	4	5	0.4	SM14-Ex-EX128	
Kirkland_Main-1873	Kirkland_Manholes-1521	258.62	Kirkland_Manholes-1524	207.32	404.3	12.69	8	PVC	0.01	2,512	2	8	10	0.4	SM14-Ex-EX128	
Kirkland_Main-1874	Kirkland_Manholes-1552	337.73	Kirkland_Manholes-761	326.09	158.4	7.35	8	PVC	0.01	1,911	1	4	5	0.3	SM14-Ex-EX124	
Kirkland_Main-1875	Kirkland_Manholes-761	326.09	Kirkland_Manholes-760	311.91	217.3	6.53	8	PVC	0.01	1,801	4	8	12	0.7	SM14-Ex-EX124	
Kirkland_Main-1876	Kirkland_Manholes-760	311.91	Kirkland_Manholes-1538	302.73	273.6	3.36	8	PVC	0.01	1,292	6	12	18	1.4	SM14-Ex-EX124	
Kirkland_Main-1877	Kirkland_Manholes-1542	314.5	Kirkland_Manholes-1541	294.69	208.5	9.5	8	PVC	0.01	2,173	1	4	5	0.2	SM14-Ex-EX123	
Kirkland_Main-1878	Kirkland_Manholes-1540	296.8	Kirkland_Manholes-1541	294.69	76	2.78	8	PVC	0.01	1,175	4	8	12	1	SM14-Ex-EX123	
Kirkland_Main-1879	Kirkland_Manholes-1539	301.51	Kirkland_Manholes-1540	296.8	362.1	1.3	8	PVC	0.01	804	3	4	7	0.9	SM14-Ex-EX123	
Kirkland_Main-1880	Kirkland_Manholes-1523	194.94	Kirkland_Manholes-1597	180.84	315.7	4.47	8	PVC	0.01	1,490	45	143	188	12.6	SM14-Ex-EX121	
Kirkland_Main-1881	Kirkland_Manholes-1524	207.32	Kirkland_Manholes-1523	194.94	95.1	13.01	8	PVC	0.01	2,543	4	12	16	0.6	SM14-Ex-EX128	
Kirkland_Main-1882	Kirkland_Manholes-1528	217.87	Kirkland_Manholes-1523	194.94	317.2	7.23	8	PVC	0.01	1,896	41	127	168	8.9	SM14-Ex-EX121	
Kirkland_Main-1883	Kirkland_Manholes-1525	281.6	Kirkland_Manholes-1526	273.99	396.4	1.92	8	PVC	0.01	977	2	4	6	0.6	SM14-Ex-EX127	
Kirkland_Main-1884	Kirkland_Manholes-1526	273.99	Kirkland_Manholes-1527	258.94	183.5	8.2	8	PVC	0.01	2,019	3	8	11	0.5	SM14-Ex-EX127	
Kirkland_Main-1885	Kirkland_Manholes-1527	258.94	Kirkland_Manholes-1528	217.87	397.7	10.33	8	PVC	0.01	2,266	4	12	16	0.7	SM14-Ex-EX127	
Kirkland_Main-1886	Kirkland_Manholes-1535	304.79	Kirkland_Manholes-1534	301.8	155.7	1.92	8	PVC	0.01	977	0	4	4	0.4	SM14-Ex-EX126	
Kirkland_Main-1887	Kirkland_Manholes-1534	301.8	Kirkland_Manholes-1533	294.07	244.9	3.16	8	PVC	0.01	1,253	1	8	9	0.7	SM14-Ex-EX126	
Kirkland_Main-1888	Kirkland_Manholes-775	172.73	KC_Manholes-5	169.15	345.4	1.04	8	PVC	0.01	718	5	32	37	5.2		
Kirkland_Main-1889	Kirkland_Manholes-774	192.94	KC_Manholes-5	169.15	221.2	10.75	8	PVC	0.01	2,312	2	8	10	0.4		
Kirkland_Main-1890	Kirkland_Manholes-773	227.51	Kirkland_Manholes-774	192.94	170.2	20.31	8	PVC	0.01	3,177	1	4	5	0.2		
Kirkland_Main-1891	Kirkland_Manholes-772	214.68	Kirkland_Manholes-771	213.99	63.9	1.08	8	PVC	0.01	733	1	4	5	0.7		
Kirkland_Main-1892	Kirkland_Manholes-443	91.49	Kirkland_Manholes-442	83.66	233.7	3.35	8	PVC	0.01	1,291	40	47	87	6.8		
Kirkland_Main-1893	Kirkland_Manholes-442	83.66	Kirkland_Manholes-441	83.38	212.8	0.13	8	PVC	0.01	256	40	51	92	35.8		
Kirkland_Main-1894	Kirkland_Manholes-441	83.38	Kirkland_Manholes-433	80.24	108	2.91	8	PVC	0.01	1,202	40	55	96	8		
Kirkland_Main-1895	Kirkland_Manholes-432	97.11	Kirkland_Manholes-433	80.24	205.7	8.2	12	PVC	0.01	5,954	99	358	457	7.7	SM14-Ex-EX30	
Kirkland_Main-1896	Kirkland_Manholes-426	144.6	Kirkland_Manholes-427	143.58	254.5	0.4	12	PVC	0.01	1,315	93	333	426	32.4	SM14-Ex-EX30	
Kirkland_Main-1897	Kirkland_Manholes-427	143.58	Kirkland_Manholes-428	141.37	251.3	0.88	12	PVC	0.01	1,950	99	337	436	22.4	SM14-Ex-EX30	
Kirkland_Main-1898	Kirkland_Manholes-428	141.37	Kirkland_Manholes-429	138.12	320.6	1.01	12	PVC	0.01	2,093	99	341	440	21	SM14-Ex-EX30	
Kirkland_Main-1899	Kirkland_Manholes-429	138.12	Kirkland_Manholes-430	132.21	248.9	2.37	12	PVC	0.01	3,203	99	346	444	13.9	SM14-Ex-EX30	
Kirkland_Main-1900	Kirkland_Manholes-430	132.21	Kirkland_Manholes-431	114.37	310.4	5.75	12	PVC	0.01	4,983	99	350	449	9	SM14-Ex-EX30	
Kirkland_Main-1901	Kirkland_Manholes-431	114.37	Kirkland_Manholes-432	97.11	290.4	5.94	12	PVC	0.01	5,068	99	354	453	8.9	SM14-Ex-EX30	
Kirkland_Main-1902	Kirkland_Manholes-433	80.24	Kirkland_Manholes-434	74.08	187.9	3.28	12	PVC	0.01	3,764	139	418	557	14.8	SM14-Ex-EX30	
Kirkland_Main-1903	Kirkland_Manholes-434	74.08	Kirkland_Manholes-435	64.4	325.2	2.98	12	PVC	0.01	3,586	139	422	562	15.7	SM14-Ex-EX30	
Kirkland_Main-1904	Kirkland_Manholes-439	82.56	Kirkland_Manholes-438	74.46	270.1	3	8	PVC	0.01	1,221	0	4	4	0.3		
Kirkland_Main-1905	Kirkland_Manholes-438	74.46	Kirkland_Manholes-435	64.4	260.6	3.86	8	PVC	0.01	1,385	58	213	271	19.6	SM14-Ex-EX31	
Kirkland_Main-1906	Kirkland_Manholes-435	64.4	Kirkland_Manholes-436	58.61	312.5	1.85	12	PVC	0.01	2,828	197	640	837	29.6	SM14-Ex-EX30	
Kirkland_Main-1907	Kirkland_Manholes-1018	179.75	Kirkland_Manholes-451	173.02	146.6	4.59	8	PVC	0.01	1,511	50	171	221	14.6	SM14-Ex-EX31	
Kirkland_Main-1908	Kirkland_Manholes-453	159.42	Kirkland_Manholes-454	126.39	122.9	26.88	8	PVC	0.01	3,655	52	184	236	6.4	SM14-Ex-EX31	
Kirkland_Main-1909	Kirkland_Manholes-440	131.78	Kirkland_Manholes-454	126.39	361.7	1.49	8	PVC	0.01	861	5	17	22	2.6	SM14-Ex-EX31	
Kirkland_Main-1910	Kirkland_Manholes-1026	149.27	Kirkland_Manholes-440	131.78	156.8	11.16	8	PVC	0.01	2,355	5	13	17	0.7		
Kirkland_Main-1911	Kirkland_Manholes-451	173.02	Kirkland_Manholes-452	170.49	70.2	3.6	8	PVC	0.01	1,339	50	175	225	16.8	SM14-Ex-EX31	
Kirkland_Main-1912	Kirkland_Manholes-452	170.49	Kirkland_Manholes-453	159.42	88.9	12.45	8	PVC	0.01	2,488	51	179	230	9.2	SM14-Ex-EX31	
Kirkland_Main-1913	Kirkland_Manholes-454	126.39	Kirkland_Manholes-438	74.46	305.4	17.01	8	PVC	0.01	2,907	58	205	263	9	SM14-Ex-EX31	
Kirkland_Main-1914	Kirkland_Manholes-484	295.92	Kirkland_Manholes-483	294.22	69.9	2.43	8	PVC	0.01	1,098	2	4	6	0.5		
Kirkland_Main-1915	Kirkland_Manholes-483	294.22	Kirkland_Manholes-482	293.97	63.5	0.4	8	PVC	0.01	446	2	8	10	2.2		
Kirkland_Main-1916	Kirkland_Manholes-481	300.21	Kirkland_Manholes-482	293.97	44.6	13.98	8	PVC	0.01	2,636	7	40	47	1.8		
Kirkland_Main-1917	Kirkland_Manholes-477	317.64	Kirkland_Manholes-481	300.21	198.9	8.76	8	PVC	0.01	2,087	6	36	42	2		
Kirkland_Main-1918	Kirkland_Manholes-478	318.91	Kirkland_Manholes-477	317.64	130.7	0.97	8	PVC	0.01	695	5	32	37	5.3		
Kirkland_Main-1919	Kirkland_Manholes-479	328.09	Kirkland_Manholes-478	318.91	81.5	11.27	8	PVC	0.01	2,367	5	28	33	1.4		
Kirkland_Main-1920	Kirkland_Manholes-476	330.32	Kirkland_Manholes-475	322.42	166.4	4.75	8	PVC	0.01	1,536	2	4	6	0.4		
Kirkland_Main-1921	Kirkland_Manholes-475	322.42	Kirkland_Manholes-473	288.65	238.6	14.15	8	PVC	0.01	2,653	3	8	11	0.4		
Kirkland_Main-1922	Kirkland_Manholes-474	290.07	Kirkland_Manholes-473	288.65	187.1	0.76	8	PVC	0.01	614	2	4	6	1		
Kirkland_Main-1923	Kirkland_Manholes-473	288.65	Kirkland_Manholes-468	238.51	297.1	16.88	8	PVC	0.01	2,896	5	16	21	0.7		
Kirkland_Main-1924	Kirkland_Manholes-468	238.51	Kirkland_Manholes-462	219.91	120.9	15.39	8	PVC	0.01	2,766	6	20	26	0.9		
Kirkland_Main-1925	Kirkland_Manholes-463	227.23	Kirkland_Manholes-462	219.91	71.2	10.28	8	PVC	0.01	2,261	2	8	10	0.4		
Kirkland_Main-1926	Kirkland_Manholes-464	254.44	Kirkland_Manholes-463	227.23	171	15.91	8	PVC	0.01	2,812	2	4	6	0.2		
Kirkland_Main-1927	Kirkland_Manholes-462	219.91	Kirkland_Manholes-465	166.54	349.5	15.27	8	PVC	0.01	2,755	8	32	40	1.4		
Kirkland_Main-1928	Kirkland_Manholes-465	166.54	Kirkland_Manholes-466	159.47	196.4	3.6	8	PVC	0.01	1,338	8	36	44	3.3		
Kirkland_Main-1929	Kirkland_Manholes-467	166.95	Kirkland_Manholes-466	159.47	59.4	12.59	8	PVC	0.01	2,502	5	16	21	0.8		

Existing with Proposed Improvements - Peak Hour Flow - Pipe Capacity Table

Label	Upstream Node	Upstream Invert Elevation (ft)	Downstream Node	Downstream Invert Elevation (ft)	Length (ft)	Slope (%)	Diameter (in)	Material	Manning's n	Design Capacity (gpm)	Domestic Flow (gpm)	I/I Flow (gpm)	Total Flow (gpm)	Percent Full (%)	CIP No.	Notes
Kirkland_Main-1930	Kirkland_Manholes-469	217.48	Kirkland_Manholes-470	207.2	162.3	6.34	8	PVC	0.01	1,775	1	4	5	0.3		
Kirkland_Main-1931	Kirkland_Manholes-471	208.89	Kirkland_Manholes-470	207.2	106.2	1.59	8	PVC	0.01	889	0	4	4	0.5		
Kirkland_Main-1932	Kirkland_Manholes-470	207.2	Kirkland_Manholes-472	192.62	137.7	10.59	8	PVC	0.01	2,294	2	12	13	0.6		
Kirkland_Main-1934	Kirkland_Manholes-489	206.41	Kirkland_Manholes-467	166.95	178.4	22.12	8	PVC	0.01	3,316	5	12	16	0.5		
Kirkland_Main-1935	Kirkland_Manholes-491	317.17	Kirkland_Manholes-492	300.1	240.7	7.09	8	PVC	0.01	1,878	3	8	11	0.6		
Kirkland_Main-1936	Kirkland_Manholes-492	300.1	Kirkland_Manholes-778	273.49	272.5	9.76	8	PVC	0.01	2,203	3	12	15	0.7		
Kirkland_Main-1937	Kirkland_Manholes-778	273.49	Kirkland_Manholes-783	251.91	166.5	12.96	8	PVC	0.01	2,539	4	16	20	0.8		
Kirkland_Main-1938	Kirkland_Manholes-783	251.91	Kirkland_Manholes-782	245.67	36.9	16.9	8	PVC	0.01	2,898	16	91	108	3.7		
Kirkland_Main-1939	Kirkland_Manholes-779	276.61	Kirkland_Manholes-486	260.65	97.8	16.33	8	PVC	0.01	2,849	1	4	5	0.2		
Kirkland_Main-1940	Kirkland_Manholes-486	260.65	Kirkland_Manholes-487	257.38	130.2	2.51	8	PVC	0.01	1,117	12	68	79	7.1		
Kirkland_Main-1942	Kirkland_Manholes-487	257.38	Kirkland_Manholes-783	251.91	251.1	2.18	8	PVC	0.01	1,041	12	72	84	8		
Kirkland_Main-1943	Kirkland_Manholes-781	270.16	Kirkland_Manholes-782	245.67	162	15.11	8	PVC	0.01	2,741	2	8	10	0.4		
Kirkland_Main-1944	Kirkland_Manholes-780	304.33	Kirkland_Manholes-781	270.16	338	10.11	8	PVC	0.01	2,242	2	4	6	0.3		
Kirkland_Main-1945	Kirkland_Manholes-782	245.67	Kirkland_Manholes-785	203.06	217.1	19.63	8	PVC	0.01	3,124	19	103	122	3.9		
Kirkland_Main-1946	Kirkland_Manholes-785	203.06	Kirkland_Manholes-784	186.93	82.2	19.62	8	PVC	0.01	3,123	19	107	127	4.1		
Kirkland_Main-1947	Kirkland_Manholes-784	186.93	Kirkland_Manholes-786	173.41	68.9	19.64	8	PVC	0.01	3,124	58	262	321	10.3		
Kirkland_Main-1948	Kirkland_Manholes-789	234.78	Kirkland_Manholes-788	234.04	150	0.49	8	PVC	0.01	495	1	4	5	0.9		
Kirkland_Main-1949	Kirkland_Manholes-788	234.04	Kirkland_Manholes-787	233.49	110.1	0.5	8	PVC	0.01	498	1	8	9	1.8		
Kirkland_Main-1950	Kirkland_Manholes-787	233.49	Kirkland_Manholes-790	227.7	106.2	5.45	8	PVC	0.01	1,646	2	12	14	0.8		
Kirkland_Main-1951	Kirkland_Manholes-485	265.21	Kirkland_Manholes-486	260.65	233.3	1.95	8	PVC	0.01	986	10	60	70	7.1		
Kirkland_Main-1952	Kirkland_Manholes-490	279.75	Kirkland_Manholes-485	265.21	234	6.21	8	PVC	0.01	1,758	9	56	65	3.7		
Kirkland_Main-1953	Kirkland_Manholes-482	293.97	Kirkland_Manholes-490	279.75	98.3	14.47	8	PVC	0.01	2,682	9	52	60	2.3		
Kirkland_Main-1954	Kirkland_Manholes-791	327.42	Kirkland_Manholes-491	317.17	287.1	3.57	8	PVC	0.01	1,332	2	4	6	0.4	SM14-Ex-EX47	
Kirkland_Main-1955	Kirkland_Manholes-796	329.52	Kirkland_Manholes-479	328.09	60.4	2.37	8	PVC	0.01	1,085	4	24	28	2.6		
Kirkland_Main-1956	Kirkland_Manholes-802	309.62	Kirkland_Manholes-801	301.38	220.6	3.74	8	PVC	0.01	1,363	1	4	5	0.4		
Kirkland_Main-1957	Kirkland_Manholes-801	301.38	Kirkland_Manholes-800	299.84	122.4	1.26	8	PVC	0.01	791	3	8	11	1.4		
Kirkland_Main-1958	Kirkland_Manholes-800	299.84	Kirkland_Manholes-799	299.17	200.4	0.33	8	PVC	0.01	408	4	12	16	3.9		
Kirkland_Main-1960	Kirkland_Manholes-797	330.09	Kirkland_Manholes-798	328.4	134	1.26	8	PVC	0.01	792	1	4	5	0.6		
Kirkland_Main-1961	Kirkland_Manholes-798	328.4	Kirkland_Manholes-799	299.17	250.4	11.67	8	PVC	0.01	2,409	2	8	10	0.4		
Kirkland_Main-1962	Kirkland_Manholes-799	299.17	Kirkland_Manholes-803	278.64	308	6.67	8	PVC	0.01	1,820	7	24	31	1.7		
Kirkland_Main-1963	Kirkland_Manholes-805	300.26	Kirkland_Manholes-806	295.73	104.4	4.34	8	PVC	0.01	1,468	6	24	30	2		
Kirkland_Main-1964	Kirkland_Manholes-806	295.73	Kirkland_Manholes-804	284.1	194.3	5.99	8	PVC	0.01	1,725	7	28	35	2		
Kirkland_Main-1965	Kirkland_Manholes-807	300.8	Kirkland_Manholes-805	300.26	78.9	0.68	8	PVC	0.01	583	6	20	26	4.4		
Kirkland_Main-1966	Kirkland_Manholes-819	270.84	Kirkland_Manholes-818	259.9	158.1	6.92	8	PVC	0.01	1,854	1	4	5	0.3		
Kirkland_Main-1967	Kirkland_Manholes-818	259.9	Kirkland_Manholes-816	252.1	223.2	3.49	8	PVC	0.01	1,318	3	8	11	0.8		
Kirkland_Main-1968	Kirkland_Manholes-816	252.1	Kirkland_Manholes-815	248.52	125.8	2.85	8	PVC	0.01	1,190	4	12	16	1.3		
Kirkland_Main-1969	Kirkland_Manholes-817	249.75	Kirkland_Manholes-815	248.52	170.1	0.72	8	PVC	0.01	600	2	4	6	1		
Kirkland_Main-1970	Kirkland_Manholes-814	224.81	Kirkland_Manholes-813	224.1	119.5	0.59	8	PVC	0.01	543	31	127	158	29.1		
Kirkland_Main-1971	Kirkland_Manholes-813	224.1	Kirkland_Manholes-811	220.71	283.2	1.2	8	PVC	0.01	771	33	131	164	21.3		
Kirkland_Main-1972	Kirkland_Manholes-810	231.27	Kirkland_Manholes-811	220.71	86.4	12.23	8	PVC	0.01	2,465	4	12	16	0.6		
Kirkland_Main-1973	Kirkland_Manholes-811	220.71	Kirkland_Manholes-812	219.12	123.9	1.28	8	PVC	0.01	799	38	147	185	23.1		
Kirkland_Main-1974	Kirkland_Manholes-809	238.49	Kirkland_Manholes-810	231.27	197.7	3.65	8	PVC	0.01	1,347	3	8	11	0.8		
Kirkland_Main-1975	Kirkland_Manholes-808	239.21	Kirkland_Manholes-809	238.5	177.5	0.4	8	PVC	0.01	446	2	4	6	1.3		Drop Connection
Kirkland_Main-1976	Kirkland_Manholes-812	219.12	Kirkland_Manholes-784	186.93	281.2	11.45	8	PVC	0.01	2,385	39	151	190	7.9		
Kirkland_Main-1977	Kirkland_Manholes-822	337.49	Kirkland_Manholes-823	321.62	170.9	9.29	8	PVC	0.01	2,149	1	4	5	0.2	SM14-Ex-EX69	
Kirkland_Main-1978	Kirkland_Manholes-823	321.62	Kirkland_Manholes-824	311.58	159.2	6.3	8	PVC	0.01	1,770	2	8	10	0.5	SM14-Ex-EX69	
Kirkland_Main-1979	Kirkland_Manholes-824	311.58	Kirkland_Manholes-825	285.55	131.7	19.76	8	PVC	0.01	3,134	2	12	14	0.4	SM14-Ex-EX69	
Kirkland_Main-1980	Kirkland_Manholes-825	285.55	Kirkland_Manholes-826	282.55	56.8	5.29	8	PVC	0.01	1,621	3	24	27	1.7	SM14-Ex-EX69	
Kirkland_Main-1981	Kirkland_Manholes-827	295.62	Kirkland_Manholes-828	285.89	94.5	10.29	8	PVC	0.01	2,262	0	4	4	0.2	SM14-Ex-EX69	
Kirkland_Main-1982	Kirkland_Manholes-826	282.55	Kirkland_Manholes-456	263.04	178.8	10.91	8	PVC	0.01	2,329	3	28	31	1.3	SM14-Ex-EX69	
Kirkland_Main-1983	Kirkland_Manholes-828	285.89	Kirkland_Manholes-825	285.55	69	0.49	8	PVC	0.01	495	1	8	9	1.8	SM14-Ex-EX69	
Kirkland_Main-1984	Kirkland_Manholes-790	227.7	Kirkland_Manholes-830	198.45	91.3	32.05	8	PVC	0.01	3,991	2	16	18	0.5		Slope verified in as-builts
Kirkland_Main-1985	Kirkland_Manholes-830	198.45	Kirkland_Manholes-831	192.6	15.9	36.68	8	PVC	0.01	4,270	4	24	28	0.6		Slope verified in as-builts
Kirkland_Main-1986	Kirkland_Manholes-831	192.6	Kirkland_Manholes-786	173.41	171.2	11.21	8	PVC	0.01	2,360	4	28	32	1.3	SM14-Ex-EX46	
Kirkland_Main-1987	Kirkland_Manholes-461	269.91	Kirkland_Manholes-460	268.13	121.9	1.46	8	PVC	0.01	852	1	4	5	0.6	SM14-Ex-EX68	
Kirkland_Main-1988	Kirkland_Manholes-460	268.13	Kirkland_Manholes-456	263.04	170.9	2.98	8	PVC	0.01	1,217	2	8	10	0.8	SM14-Ex-EX68	
Kirkland_Main-1989	Kirkland_Manholes-455	250.45	Kirkland_Manholes-457	235.02	148.1	10.42	8	PVC	0.01	2,276	29	111	140	6.1	SM14-Ex-EX67	
Kirkland_Main-1990	Kirkland_Manholes-457	235.02	Kirkland_Manholes-458	212.1	153.1	14.97	8	PVC	0.01	2,728	29	119	148	5.4	SM14-Ex-EX67	
Kirkland_Main-1991	Kirkland_Manholes-459	247.75	Kirkland_Manholes-457	235.02	263.1	4.84	8	PVC	0.01	1,551	1	4	5	0.3	SM14-Ex-EX67	
Kirkland_Main-1992	Kirkland_Manholes-456	263.04	Kirkland_Manholes-455	262.36	18.8	3.61	8	PVC	0.01	1,339	5	40	45	3.3	SM14-Ex-EX68	Drop Connection
Kirkland_Main-1993	Kirkland_Manholes-792	342.6	Kirkland_Manholes-832	339.26	96.2	3.47	8	PVC	0.01	1,314	1	4	5	0.4	SM14-Ex-EX70	
Kirkland_Main-1994	Kirkland_Manholes-793	339.56	Kirkland_Manholes-832	339.26	76	0.4	8	PVC	0.01	446	2	4	6	1.3	SM14-Ex-EX70	

Existing with Proposed Improvements - Peak Hour Flow - Pipe Capacity Table

Label	Upstream Node	Upstream Invert Elevation (ft)	Downstream Node	Downstream Invert Elevation (ft)	Length (ft)	Slope (%)	Diameter (in)	Material	Manning's n	Design Capacity (gpm)	Domestic Flow (gpm)	I/I Flow (gpm)	Total Flow (gpm)	Percent Full (%)	CIP No.	Notes
Kirkland_Main-1997	Kirkland_Manholes-988	238.57	Kirkland_Manholes-989	235.68	166.4	1.74	8	PVC	0.01	929	1	4	5	0.6		
Kirkland_Main-1998	Kirkland_Manholes-989	235.68	Kirkland_Manholes-990	231.8	65.1	5.96	8	PVC	0.01	1,721	2	9	11	0.6		
Kirkland_Main-1999	Kirkland_Manholes-990	231.8	Kirkland_Manholes-991	230.6	208.7	0.57	8	PVC	0.01	535	4	13	16	3.1		
Kirkland_Main-2000	Kirkland_Manholes-992	230.9	Kirkland_Manholes-991	230.6	22.8	1.32	8	PVC	0.01	809	1	4	5	0.6		
Kirkland_Main-2001	Kirkland_Manholes-991	230.6	Kirkland_Manholes-993	229.29	112.3	1.17	8	PVC	0.01	762	4	21	26	3.4		
Kirkland_Main-2002	Kirkland_Manholes-993	229.29	Kirkland_Manholes-994	224.8	89	5.04	8	PVC	0.01	1,583	5	26	31	1.9		
Kirkland_Main-2003	Kirkland_Manholes-996	225.97	Kirkland_Manholes-994	224.8	53	2.21	8	PVC	0.01	1,047	0	4	4	0.4		
Kirkland_Main-2004	Kirkland_Manholes-994	224.8	Kirkland_Manholes-995	224.6	50	0.4	8	PVC	0.01	446	5	34	39	8.8		
Kirkland_Main-2005	Kirkland_Manholes-995	224.6	Kirkland_Manholes-997	222.3	221.9	1.04	8	PVC	0.01	718	6	38	45	6.3		
Kirkland_Main-2006	Kirkland_Manholes-997	222.3	Kirkland_Manholes-998	220.4	187.6	1.01	8	PVC	0.01	710	6	43	49	6.9		
Kirkland_Main-2007	Kirkland_Manholes-998	220.4	Kirkland_Manholes-980	219.4	152.8	0.65	8	PVC	0.01	570	6	47	53	9.4		
Kirkland_Main-2008	Kirkland_Manholes-980	219.4	Kirkland_Manholes-981	218.7	155.5	0.45	8	PVC	0.01	473	18	115	133	28.2		
Kirkland_Main-2009	Kirkland_Manholes-981	218.7	Kirkland_Manholes-982	217.59	190.8	0.58	8	PVC	0.01	538	20	119	139	25.9		
Kirkland_Main-2010	Kirkland_Manholes-982	217.59	Kirkland_Manholes-983	215.91	138.4	1.21	8	PVC	0.01	777	25	124	149	19.2		
Kirkland_Main-2011	Kirkland_Manholes-983	215.91	Kirkland_Manholes-984	210.71	282.7	1.84	8	PVC	0.01	956	26	128	154	16.1		
Kirkland_Main-2012	Kirkland_Manholes-984	210.71	Kirkland_Manholes-985	205.92	47.8	10.03	8	PVC	0.01	2,232	29	132	161	7.2		
Kirkland_Main-2013	Kirkland_Manholes-1001	230.61	Kirkland_Manholes-1020	226.4	192.3	2.19	8	PVC	0.01	1,043	28	90	117	11.2		
Kirkland_Main-2014	Kirkland_Manholes-1000	240.25	Kirkland_Manholes-1001	230.61	249.9	3.86	8	PVC	0.01	1,385	26	85	112	8.1		
Kirkland_Main-2015	Kirkland_Manholes-999	246.1	Kirkland_Manholes-1000	240.25	246.4	2.37	8	PVC	0.01	1,086	25	81	106	9.7		
Kirkland_Main-2016	Kirkland_Manholes-972	246.27	Kirkland_Manholes-999	246.1	109.4	0.16	8	PVC	0.01	278	24	77	101	36.3		
Kirkland_Main-2017	Kirkland_Manholes-1002	227.29	Kirkland_Manholes-1003	219.05	401.3	2.05	8	PVC	0.01	1,010	2	4	6	0.6		
Kirkland_Main-2018	Kirkland_Manholes-1003	219.05	Kirkland_Manholes-1004	214.11	181.5	2.72	8	PVC	0.01	1,163	4	9	12	1.1		
Kirkland_Main-2019	Kirkland_Manholes-1006	216.58	Kirkland_Manholes-1007	215.09	213.6	0.7	8	PVC	0.01	589	4	9	12	2.1		
Kirkland_Main-2020	Kirkland_Manholes-1005	223.06	Kirkland_Manholes-1006	216.58	398.8	1.63	8	PVC	0.01	899	2	4	6	0.7		
Kirkland_Main-2023	Kirkland_Manholes-1007	215.09	Kirkland_Manholes-1004	214.11	335.8	0.29	8	PVC	0.01	381	5	13	18	4.8		
Kirkland_Main-2024	Kirkland_Manholes-1012	211.42	Kirkland_Manholes-1013	197.72	100.9	13.58	8	PVC	0.01	2,598	2	4	6	0.2		
Kirkland_Main-2025	Kirkland_Manholes-1013	197.72	Kirkland_Manholes-1014	187.16	124	8.52	8	PVC	0.01	2,057	3	9	11	0.5		
Kirkland_Main-2026	Kirkland_Manholes-1014	187.16	Kirkland_Manholes-1015	186.96	99	0.2	8	PVC	0.01	317	3	13	16	4.9		
Kirkland_Main-2027	Kirkland_Manholes-1015	186.96	Kirkland_Manholes-1016	185.35	120.5	1.34	8	PVC	0.01	815	5	17	22	2.7		
Kirkland_Main-2028	Kirkland_Manholes-1016	185.35	Kirkland_Manholes-1036	185.26	143	0.06	8	PVC	0.01	174	7	21	28	16.1		
Kirkland_Main-2029	Kirkland_Manholes-1036	185.26	Kirkland_Manholes-1030	184.08	404.9	0.29	10	PVC	0.01	690	7	26	32	4.7		
Kirkland_Main-2030	Kirkland_Manholes-1030	184.08	Kirkland_Manholes-1031	183.18	286.1	0.31	10	PVC	0.01	717	10	30	40	5.5		
Kirkland_Main-2031	Kirkland_Manholes-1034	183.86	Kirkland_Manholes-1031	183.18	169	0.4	8	PVC	0.01	445	1	4	5	1.1		
Kirkland_Main-2032	Kirkland_Manholes-1031	183.18	Kirkland_Manholes-1035	182.7	151.6	0.32	8	PVC	0.01	397	11	38	49	12.5		
Kirkland_Main-2033	Kirkland_Manholes-1032	177.81	Kirkland_Manholes-1033	173.21	285.6	1.61	8	PVC	0.01	895	3	9	12	1.3		
Kirkland_Main-2034	Kirkland_Manholes-1004	214.11	Kirkland_Manholes-1028	212.78	233.9	0.57	8	PVC	0.01	532	9	26	35	6.5		
Kirkland_Main-2035	Kirkland_Manholes-1009	214.27	Kirkland_Manholes-1008	211.28	293.5	1.02	8	PVC	0.01	712	2	4	6	0.9	SM14-Ex-EX19	
Kirkland_Main-2036	Kirkland_Manholes-1028	212.78	Kirkland_Manholes-1008	211.28	261	0.57	8	PVC	0.01	534	9	30	39	7.3	SM14-Ex-EX19	
Kirkland_Main-2037	Kirkland_Manholes-1008	211.28	Kirkland_Manholes-1029	210.29	108.6	0.91	8	PVC	0.01	673	11	38	49	7.4	SM14-Ex-EX19	
Kirkland_Main-2038	Kirkland_Manholes-1029	210.29	Kirkland_Manholes-1010	207.69	265.5	0.98	8	PVC	0.01	698	11	43	54	7.7	SM14-Ex-EX19	
Kirkland_Main-2039	Kirkland_Manholes-1010	207.69	Kirkland_Manholes-1017	205.5	77.5	2.83	8	PVC	0.01	1,186	11	47	58	4.9	SM14-Ex-EX19	
Kirkland_Main-2040	Kirkland_Manholes-1022	213.66	Kirkland_Manholes-1023	207.88	245.2	2.36	8	PVC	0.01	1,083	35	111	145	13.4	SM14-Ex-EX18	
Kirkland_Main-2041	Kirkland_Manholes-1023	207.88	Kirkland_Manholes-1017	205.5	153	1.56	8	PVC	0.01	879	36	115	152	17.3	SM14-Ex-EX18	
Kirkland_Main-2042	Kirkland_Manholes-1017	205.5	Kirkland_Manholes-1018	179.75	288.9	8.91	8	PVC	0.01	2,105	48	166	215	10.2	SM14-Ex-EX31	
Kirkland_Main-2043	Kirkland_Manholes-1025	183.2	Kirkland_Manholes-1026	149.27	241.9	14.02	8	PVC	0.01	2,640	3	4	7	0.3		
Kirkland_Main-2044	Kirkland_Manholes-1027	150.87	Kirkland_Manholes-1026	149.27	180	0.89	8	PVC	0.01	665	2	4	6	0.9		
Kirkland_Main-2045	Kirkland_Manholes-1021	230.72	Kirkland_Manholes-1020	230.54	45.4	0.4	8	PVC	0.01	446	3	9	11	2.5	SM14-Ex-EX18	Drop Connection
Kirkland_Main-2046	Kirkland_Manholes-1020	226.4	Kirkland_Manholes-1019	216.75	175.1	5.51	8	PVC	0.01	1,655	32	102	134	8.1	SM14-Ex-EX18	
Kirkland_Main-2047	Kirkland_Manholes-1019	216.75	Kirkland_Manholes-1022	213.66	284.9	1.08	8	PVC	0.01	734	33	107	140	19.1	SM14-Ex-EX18	
Kirkland_Main-2050	Kirkland_Manholes-1037	180.8	Kirkland_Manholes-1032	177.81	192.3	1.56	8	PVC	0.01	879	2	4	6	0.7		
Kirkland_Main-2051	Kirkland_Manholes-1041	211.62	Kirkland_Manholes-1040	211.16	115.7	0.4	8	PVC	0.01	446	2	4	6	1.3		
Kirkland_Main-2052	Kirkland_Manholes-1040	211.16	Kirkland_Manholes-1039	191.93	181.5	10.59	8	PVC	0.01	2,295	3	9	11	0.5		
Kirkland_Main-2053	Kirkland_Manholes-1039	191.93	Kirkland_Manholes-1038	180.54	235.3	4.84	8	PVC	0.01	1,551	4	13	17	1.1		
Kirkland_Main-2054	Kirkland_Manholes-1038	180.54	Kirkland_Manholes-1042	180.42	296.4	0.04	8	PVC	0.01	140	21	81	102	73	SM14-2035-DF6	
Kirkland_Main-2055	Kirkland_Manholes-1045	212.56	Kirkland_Manholes-1044	190.19	362.7	6.17	8	PVC	0.01	1,751	3	4	7	0.4		
Kirkland_Main-2056	Kirkland_Manholes-1044	190.19	Kirkland_Manholes-1043	180.32	106.1	9.3	8	PVC	0.01	2,151	4	9	13	0.6		
Kirkland_Main-2057	Kirkland_Manholes-1042	180.42	Kirkland_Manholes-1043	180.32	14.1	0.71	8	PVC	0.01	594	22	85	107	18		
Kirkland_Main-2058	Kirkland_Manholes-1051	183.74	Kirkland_Manholes-1050	181.82	166.3	1.15	8	PVC	0.01	758	33	145	178	23.5		
Kirkland_Main-2059	Kirkland_Manholes-1050	181.82	Kirkland_Manholes-1049	169.63	230.3	5.29	8	PVC	0.01	1,622	40	149	189	11.7		
Kirkland_Main-2060	Kirkland_Manholes-1049	169.63	Kirkland_Manholes-1048	168.86	245.7	0.31	8	PVC	0.01	395	40	154	194	49.1		
Kirkland_Main-2061	Kirkland_Manholes-986	204.38	Kirkland_Manholes-1051	183.74	288.7	7.15	8	PVC	0.01	1,885	31	141	172	9.1		
Kirkland_Main-2062	Kirkland_Manholes-1048	168.86	Kirkland_Manholes-1047	166.5	308.6	0.76	8	PVC	0.01	617	46	158	204	33.1		

Existing with Proposed Improvements - Peak Hour Flow - Pipe Capacity Table

Label	Upstream Node	Upstream Invert Elevation (ft)	Downstream Node	Downstream Invert Elevation (ft)	Length (ft)	Slope (%)	Diameter (in)	Material	Manning's n	Design Capacity (gpm)	Domestic Flow (gpm)	I/I Flow (gpm)	Total Flow (gpm)	Percent Full (%)	CIP No.	Notes
Kirkland_Main-2063	Kirkland_Manholes-1047	166.5	Kirkland_Manholes-1046	162.86	368.8	0.99	8	PVC	0.01	700	46	162	208	29.7		
Kirkland_Main-2064	Kirkland_Manholes-1053	228.57	Kirkland_Manholes-1089	214.64	105.1	13.25	8	PVC	0.01	2,566	1	32	33	1.3		
Kirkland_Main-2065	Kirkland_Manholes-1054	235.88	Kirkland_Manholes-1053	228.57	61.2	11.95	8	PVC	0.01	2,437	1	28	29	1.2		
Kirkland_Main-2066	Kirkland_Manholes-1062	265.12	Kirkland_Manholes-1055	254.27	156.2	6.95	8	PVC	0.01	1,858	6	20	26	1.4		
Kirkland_Main-2067	Kirkland_Manholes-1063	275.15	Kirkland_Manholes-1062	265.12	144.2	6.96	8	PVC	0.01	1,860	1	4	5	0.3		
Kirkland_Main-2068	Kirkland_Manholes-1064	278.57	Kirkland_Manholes-1062	265.12	154.9	8.68	8	PVC	0.01	2,078	4	12	16	0.8		
Kirkland_Main-2069	Kirkland_Manholes-1055	254.27	Kirkland_Manholes-1056	242.38	224	5.31	8	PVC	0.01	1,625	7	24	30	1.9		
Kirkland_Main-2070	Kirkland_Manholes-1056	242.38	Kirkland_Manholes-1057	237.15	108.2	4.83	8	PVC	0.01	1,550	8	28	36	2.3		
Kirkland_Main-2071	Kirkland_Manholes-1057	237.15	Kirkland_Manholes-1058	224.96	136.1	8.96	8	PVC	0.01	2,110	11	44	55	2.6		
Kirkland_Main-2072	Kirkland_Manholes-1059	243.26	Kirkland_Manholes-1057	237.15	201.9	3.03	8	PVC	0.01	1,227	3	12	15	1.2		
Kirkland_Main-2073	Kirkland_Manholes-1061	271.51	Kirkland_Manholes-1060	252.96	148.5	12.49	8	PVC	0.01	2,492	1	4	5	0.2		
Kirkland_Main-2074	Kirkland_Manholes-1060	252.96	Kirkland_Manholes-1059	243.26	83.7	11.58	8	PVC	0.01	2,400	2	8	10	0.4		
Kirkland_Main-2075	Kirkland_Manholes-1103	198.97	Kirkland_Manholes-1101	197.04	31	6.23	18	PVC	0.01	15,303	549	2,070	2,619	17.1		
Kirkland_Main-2076	Kirkland_Manholes-1102	199.75	Kirkland_Manholes-1101	197.04	30.1	8.99	8	PVC	0.01	2,114	3	40	42	2		
Kirkland_Main-2077	Kirkland_Manholes-1100	201.72	Kirkland_Manholes-1102	199.75	337.5	0.58	8	PVC	0.01	539	2	36	37	6.9		
Kirkland_Main-2078	Kirkland_Manholes-1093	203.29	Kirkland_Manholes-1100	201.72	272.4	0.58	8	PVC	0.01	535	0	32	32	6		
Kirkland_Main-2079	Kirkland_Manholes-1095	206.07	Kirkland_Manholes-1094	204.22	102	1.81	8	PVC	0.01	950	0	4	4	0.5		
Kirkland_Main-2080	Kirkland_Manholes-1094	204.22	Kirkland_Manholes-1093	203.29	43.7	2.13	8	PVC	0.01	1,028	0	8	8	0.8		
Kirkland_Main-2081	Kirkland_Manholes-1096	204.27	Kirkland_Manholes-1093	203.29	162.1	0.6	8	PVC	0.01	548	0	20	20	3.6		
Kirkland_Main-2082	Kirkland_Manholes-1098	205.6	Kirkland_Manholes-1097	204.86	78.1	0.95	8	PVC	0.01	686	0	4	4	0.6		
Kirkland_Main-2083	Kirkland_Manholes-1097	204.86	Kirkland_Manholes-1096	204.27	167.5	0.35	8	PVC	0.01	418	0	16	16	3.8		
Kirkland_Main-2084	Kirkland_Manholes-1099	211.44	Kirkland_Manholes-1097	204.86	308.5	2.13	8	PVC	0.01	1,030	0	8	8	0.8		
Kirkland_Main-2085	Kirkland_Manholes-1079	238.18	Kirkland_Manholes-1080	229.14	134.4	6.73	8	PVC	0.01	1,829	1	4	5	0.3		
Kirkland_Main-2086	Kirkland_Manholes-1080	229.14	Kirkland_Manholes-1081	226.1	255.6	1.19	8	PVC	0.01	769	63	258	321	41.7		
Kirkland_Main-2087	Kirkland_Manholes-1082	233.35	Kirkland_Manholes-1081	226.1	142.6	5.08	8	PVC	0.01	1,590	1	4	5	0.3		
Kirkland_Main-2088	Kirkland_Manholes-1081	226.1	Kirkland_Manholes-1070	224.89	260.5	0.46	8	PVC	0.01	481	64	266	331	68.8	SM14-2035-DF7	
Kirkland_Main-2089	Kirkland_Manholes-1069	247.48	Kirkland_Manholes-1070	224.89	321.6	7.02	8	PVC	0.01	1,869	64	226	467	25		
Kirkland_Main-2090	Kirkland_Manholes-1067	259.57	Kirkland_Manholes-1069	247.48	126	9.6	8	PVC	0.01	2,184	60	211	447	20.5		
Kirkland_Main-2091	Kirkland_Manholes-1071	277.81	Kirkland_Manholes-1067	259.57	242.2	7.53	8	PVC	0.01	1,935	15	60	74	3.8		
Kirkland_Main-2092	Kirkland_Manholes-1072	288.83	Kirkland_Manholes-1071	277.81	139.9	7.88	8	PVC	0.01	1,979	7	20	27	1.4		
Kirkland_Main-2093	Kirkland_Manholes-1077	252.59	Kirkland_Manholes-1069	247.48	346.5	1.47	8	PVC	0.01	856	4	12	16	1.8		
Kirkland_Main-2094	Kirkland_Manholes-1078	305.14	Kirkland_Manholes-1073	302.05	162.4	1.9	8	PVC	0.01	973	3	8	11	1.1		
Kirkland_Main-2095	Kirkland_Manholes-1073	302.05	Kirkland_Manholes-1072	288.83	375.1	3.52	8	PVC	0.01	1,324	6	16	22	1.6		
Kirkland_Main-2096	Kirkland_Manholes-1074	295.05	Kirkland_Manholes-1075	291.84	155.4	2.07	8	PVC	0.01	1,013	41	127	345	34		
Kirkland_Main-2097	Kirkland_Manholes-1076	298.68	Kirkland_Manholes-1074	295.05	108.2	3.36	8	PVC	0.01	1,291	41	123	340	26.3		
Kirkland_Main-2098	Kirkland_Manholes-1068	279.38	Kirkland_Manholes-1066	278.91	39.6	1.19	8	PVC	0.01	768	44	139	359	46.7		
Kirkland_Main-2099	Kirkland_Manholes-1066	278.91	Kirkland_Manholes-1065	260.88	143.1	12.6	8	PVC	0.01	2,502	44	143	363	14.5		
Kirkland_Main-2100	Kirkland_Manholes-1065	260.88	Kirkland_Manholes-1067	259.57	130	1.01	8	PVC	0.01	708	44	147	367	51.9		
Kirkland_Main-2101	Kirkland_Manholes-1090	254.86	Kirkland_Manholes-1091	251.69	82.2	3.86	8	PVC	0.01	1,385	1	16	17	1.2		
Kirkland_Main-2102	Kirkland_Manholes-1091	251.69	Kirkland_Manholes-1092	246.51	140.9	3.68	8	PVC	0.01	1,352	1	20	21	1.5		
Kirkland_Main-2103	Kirkland_Manholes-1092	246.51	Kirkland_Manholes-1054	235.88	141.8	7.5	8	PVC	0.01	1,931	1	24	25	1.3		
Kirkland_Main-2104	Kirkland_Manholes-1089	214.64	Kirkland_Manholes-1086	198.2	276	5.96	8	PVC	0.01	1,721	1	36	37	2.1		
Kirkland_Main-2105	Kirkland_Manholes-1088	203.98	Kirkland_Manholes-1087	203.79	103.7	0.19	8	PVC	0.01	306	5	4	8	2.8		
Kirkland_Main-2106	Kirkland_Manholes-1087	203.79	Kirkland_Manholes-1086	198.2	55.1	10.14	8	PVC	0.01	2,245	5	8	12	0.6		
Kirkland_Main-2107	Kirkland_Manholes-1070	224.89	Kirkland_Manholes-1083	220.88	227.5	1.76	12	PVC	0.01	2,760	130	497	802	29.1	SM14-Ex-EX321	
Kirkland_Main-2108	Kirkland_Manholes-2996	220.63	Kirkland_Manholes-1084	206.2	323.5	4.46	8	PVC	0.01	1,489	139	509	824	55.3		
Kirkland_Main-2109	Kirkland_Manholes-1058	224.96	Kirkland_Manholes-1084	206.2	342.8	5.47	8	PVC	0.01	1,649	12	48	59	3.6		
Kirkland_Main-2110	Kirkland_Manholes-1084	206.2	Kirkland_Manholes-1085	204.43	46.9	3.78	8	PVC	0.01	1,370	151	560	888	64.8		
Kirkland_Main-2111	Kirkland_Manholes-1101	197.04	Kirkland_Manholes-1104	196.79	207.5	0.12	24	PVC	0.01	4,572	552	2,114	2,666	58.3	SM14-Ex-EX22	
Kirkland_Main-2112	Kirkland_Manholes-1112	179.44	Kirkland_Manholes-1124	177.02	214.1	1.13	15	PVC	0.01	4,007	58	32	90	2.2		
Kirkland_Main-2113	Kirkland_Manholes-1113	180.6	Kirkland_Manholes-1112	179.44	131.8	0.88	15	PVC	0.01	3,535	50	24	74	2.1		
Kirkland_Main-2114	Kirkland_Manholes-1117	196.58	Kirkland_Manholes-1115	186.39	163.3	6.24	15	PVC	0.01	9,416	18	12	30	0.3		
Kirkland_Main-2115	Kirkland_Manholes-1116	180.36	Kirkland_Manholes-1112	179.44	120	0.77	8	PVC	0.01	617	3	4	7	1.2		
Kirkland_Main-2116	Kirkland_Manholes-1119	159.49	Kirkland_Manholes-1120	158.13	217.8	0.62	8	PVC	0.01	557	25	6	31	5.5		
Kirkland_Main-2117	Kirkland_Manholes-1126	164.51	Kirkland_Manholes-1127	163.92	310.2	0.19	24	PVC	0.01	5,757	280	683	1,139	19.8	SM14-Ex-EX4	
Kirkland_Main-2118	Kirkland_Manholes-1134	223.76	Kirkland_Manholes-1131	191.56	280.1	11.49	8	PVC	0.01	2,390	12	23	35	1.5	SM14-Ex-EX63	
Kirkland_Main-2119	Kirkland_Manholes-1137	231.81	Kirkland_Manholes-1135	210.01	166.8	13.07	8	PVC	0.01	2,549	2	4	6	0.2	SM14-Ex-EX81	
Kirkland_Main-2120	Kirkland_Manholes-1135	210.01	Kirkland_Manholes-1131	191.56	334.9	5.51	8	PVC	0.01	1,655	2	13	15	0.9	SM14-Ex-EX81	
Kirkland_Main-2121	Kirkland_Manholes-1136	213.62	Kirkland_Manholes-1135	210.01	85.6	4.22	8	PVC	0.01	1,448	0	4	4	0.3	SM14-Ex-EX81	
Kirkland_Main-2122	Kirkland_Manholes-680	257.67	Kirkland_Manholes-679	257.45	31.1	0.71	8	PVC	0.01	593	19	24	43	7.3		
Kirkland_Main-2123	Kirkland_Manholes-679	257.45	Kirkland_Manholes-681	256.89	146.9	0.38	8	PVC	0.01	435	19	32	51	11.7		
Kirkland_Main-2124	Kirkland_Manholes-678	266.88	Kirkland_Manholes-679	257.45	86.2	10.93	8	PVC	0.01	2,331	0	4	4	0.2		

Existing with Proposed Improvements - Peak Hour Flow - Pipe Capacity Table

Label	Upstream Node	Upstream Invert Elevation (ft)	Downstream Node	Downstream Invert Elevation (ft)	Length (ft)	Slope (%)	Diameter (in)	Material	Manning's n	Design Capacity (gpm)	Domestic Flow (gpm)	I/I Flow (gpm)	Total Flow (gpm)	Percent Full (%)	CIP No.	Notes
Kirkland_Main-2125	Kirkland_Manholes-682	258.64	Kirkland_Manholes-680	257.67	223	0.44	8	PVC	0.01	465	1	20	20	4.4		
Kirkland_Main-2126	Kirkland_Manholes-685	255.36	Kirkland_Manholes-1888	254.12	288.3	0.43	8	PVC	0.01	462	21	44	65	14		
Kirkland_Main-2127	Kirkland_Manholes-684	256.25	Kirkland_Manholes-685	255.36	200.3	0.44	8	PVC	0.01	469	19	40	59	12.6		
Kirkland_Main-2128	Kirkland_Manholes-1740	35.99	Kirkland_Manholes-1743	28.04	156.8	5.07	10	PVC	0.01	2,878	247	560	807	28		
Kirkland_Main-2129	Kirkland_Manholes-1757	18.99	Kirkland_Manholes-1756	15.01	53.7	7.42	8	PVC	0.01	1,920	5	6	12	0.6	SM14-Ex-EX183	
Kirkland_Main-2130	Kirkland_Manholes-1756	15.01	Kirkland_Manholes-1758	14.89	54.1	0.21	12	PVC	0.01	959	57	19	77	8	SM14-Ex-EX183	
Kirkland_Main-2131	Kirkland_Manholes-1758	14.89	Kirkland_Manholes-1759	14.76	60.8	0.23	12	PVC	0.01	991	60	26	86	8.7	SM14-Ex-EX183	
Kirkland_Main-2132	Kirkland_Manholes-1759	14.76	Kirkland_Manholes-1789	14.67	38.9	0.21	12	PVC	0.01	957	60	32	93	9.7	SM14-Ex-EX183	
Kirkland_Main-2133	Kirkland_Manholes-2067	19	Kirkland_Manholes-1756	15.01	217.5	1.84	12	PVC	0.01	2,816	46	6	52	1.9	SM14-Ex-EX183	
Kirkland_Main-2134	Kirkland_Manholes-2305	15.26	Kirkland_Manholes-1755	15.12	124.7	0.11	21	PVC	0.01	3,097	267	675	942	30.4		
Kirkland_Main-2135	Kirkland_Manholes-1755	15.12	Kirkland_Manholes-1753	14.83	381.1	0.08	21	PVC	0.01	2,550	267	682	949	37.2		
Kirkland_Main-2136	Kirkland_Manholes-1753	14.83	Kirkland_Manholes-1754	14.75	34.9	0.23	21	PVC	0.01	4,426	272	688	961	21.7		
Kirkland_Main-2137	Kirkland_Manholes-1754	14.75	Kirkland_Manholes-1789	14.67	165.1	0.05	21	PVC	0.01	2,035	279	695	974	47.8		
Kirkland_Main-2138	Kirkland_Manholes-1692	35.9	Kirkland_Manholes-736	28.45	107.1	6.96	8	PVC	0.01	1,860	60	272	332	17.8	SM14-Ex-EX96	
Kirkland_Main-2139	Kirkland_Manholes-1694	44.12	Kirkland_Manholes-1692	35.9	116.3	7.07	8	PVC	0.01	1,874	56	255	312	16.6	SM14-Ex-EX96	
Kirkland_Main-2140	Kirkland_Manholes-1701	49.81	Kirkland_Manholes-1694	44.12	274.3	2.07	8	PVC	0.01	1,016	4	16	20	2	SM14-Ex-EX152	
Kirkland_Main-2141	Kirkland_Manholes-1702	82.31	Kirkland_Manholes-1701	49.81	296.4	10.96	8	PVC	0.01	2,335	1	8	9	0.4	SM14-Ex-EX152	
Kirkland_Main-2142	Kirkland_Manholes-1698	89.68	Kirkland_Manholes-1697	68.77	247.3	8.45	8	PVC	0.01	2,050	1	8	10	0.5	SM14-Ex-EX151	
Kirkland_Main-2143	Kirkland_Manholes-1697	68.77	Kirkland_Manholes-1696	58.41	181	5.72	8	PVC	0.01	1,687	5	16	21	1.3	SM14-Ex-EX151	
Kirkland_Main-2144	Kirkland_Manholes-614	87.89	Kirkland_Manholes-1696	58.41	277.2	10.64	8	PVC	0.01	2,299	45	198	242	10.5	SM14-Ex-EX96	
Kirkland_Main-2145	Kirkland_Manholes-2025	477	Kirkland_Manholes-2024	470.6	42.9	14.92	8	PVC	0.01	2,724	6	12	18	0.7		
Kirkland_Main-2146	Kirkland_Manholes-2024	470.6	Kirkland_Manholes-2023	466.76	120.1	3.2	8	PVC	0.01	1,261	7	16	23	1.8		
Kirkland_Main-2147	Kirkland_Manholes-2019	467.83	Kirkland_Manholes-2022	466	273.9	0.67	10	PVC	0.01	1,045	99	246	345	33.1		
Kirkland_Main-2148	Kirkland_Manholes-2028	481.27	Kirkland_Manholes-2026	474.59	90.6	7.37	8	PVC	0.01	1,914	2	4	6	0.3		
Kirkland_Main-2149	Kirkland_Manholes-2029	479.06	Kirkland_Manholes-2027	477.1	283.3	0.69	8	PVC	0.01	586	21	75	97	16.5		
Kirkland_Main-2150	Kirkland_Manholes-2027	477.1	Kirkland_Manholes-2026	474.59	76.4	3.29	8	PVC	0.01	1,278	22	79	102	8		
Kirkland_Main-2151	Kirkland_Manholes-2026	474.59	Kirkland_Manholes-2021	473.17	135.7	1.05	8	PVC	0.01	721	24	87	111	15.4		
Kirkland_Main-2152	Kirkland_Manholes-2033	462.47	Kirkland_Manholes-2034	462.21	16.1	1.61	8	PVC	0.01	896	1	4	5	0.5		
Kirkland_Main-2153	Kirkland_Manholes-2034	462.21	Kirkland_Manholes-2032	461.07	176.2	0.65	8	PVC	0.01	567	1	8	9	1.6		Drop Connection
Kirkland_Main-2154	Kirkland_Manholes-2031	464.09	Kirkland_Manholes-2032	458.97	79	6.48	8	PVC	0.01	1,795	109	282	392	21.8	SM14-Ex-EX264	
Kirkland_Main-2155	Kirkland_Manholes-2030	465.11	Kirkland_Manholes-2031	464.09	197.9	0.52	10	PVC	0.01	918	109	278	387	42.2		
Kirkland_Main-2156	Kirkland_Manholes-2022	466	Kirkland_Manholes-2030	465.11	389.3	0.23	10	PVC	0.01	611	107	270	377	61.7		
Kirkland_Main-2157	Kirkland_Manholes-2035	454.4	Kirkland_Manholes-2036	452.58	173.2	1.05	8	PVC	0.01	723	113	298	411	56.8	SM14-Ex-EX264	
Kirkland_Main-2158	Kirkland_Manholes-2032	458.97	Kirkland_Manholes-2035	454.4	196.5	2.33	8	PVC	0.01	1,075	112	294	406	37.7	SM14-Ex-EX264	
Kirkland_Main-2159	Kirkland_Manholes-2039	480.14	Kirkland_Manholes-2040	475.69	137	3.25	8	PVC	0.01	1,271	5	8	13	1	SM14-Ex-EX266	
Kirkland_Main-2160	Kirkland_Manholes-2038	484.4	Kirkland_Manholes-2039	480.14	188.8	2.26	8	PVC	0.01	1,059	1	4	5	0.5	SM14-Ex-EX266	
Kirkland_Main-2161	Kirkland_Manholes-2040	475.69	Kirkland_Manholes-2037	465.67	362.6	2.76	8	PVC	0.01	1,172	7	12	19	1.6	SM14-Ex-EX266	
Kirkland_Main-2162	Kirkland_Manholes-2672	373.35	Kirkland_Manholes-2674	354.77	247.9	7.5	8	PVC	0.01	1,930	14	79	93	4.8	SM14-Ex-EX209	
Kirkland_Main-2163	Kirkland_Manholes-2671	399.75	Kirkland_Manholes-2672	373.35	240.8	10.97	8	PVC	0.01	2,335	13	75	88	3.8	SM14-Ex-EX209	
Kirkland_Main-2164	Kirkland_Manholes-2674	354.77	Kirkland_Manholes-2300	337.19	208.1	8.45	8	PVC	0.01	2,049	15	83	98	4.8	SM14-Ex-EX209	
Kirkland_Main-2165	Kirkland_Manholes-2678	335.2	Kirkland_Manholes-2681	334.86	198.8	0.17	12	PVC	0.01	860	37	167	204	23.7	SM14-Ex-EX206	
Kirkland_Main-2166	Kirkland_Manholes-2680	361.93	Kirkland_Manholes-2678	335.2	358.9	7.45	8	PVC	0.01	1,924	3	4	7	0.4		
Kirkland_Main-2167	Kirkland_Manholes-2677	336.2	Kirkland_Manholes-2678	335.2	208.7	0.48	12	PVC	0.01	1,439	34	159	193	13.4	SM14-Ex-EX206	
Kirkland_Main-2168	Kirkland_Manholes-2676	336.73	Kirkland_Manholes-2677	336.2	133.1	0.4	12	PVC	0.01	1,317	34	155	188	14.3	SM14-Ex-EX206	
Kirkland_Main-2169	Kirkland_Manholes-2675	350.82	Kirkland_Manholes-2676	336.73	223.6	6.3	8	PVC	0.01	1,770	3	8	11	0.6	SM14-Ex-EX208	
Kirkland_Main-2170	Kirkland_Manholes-2300	337.19	Kirkland_Manholes-2676	336.73	113.6	0.4	12	PVC	0.01	1,317	30	143	173	13.1	SM14-Ex-EX206	
Kirkland_Main-2171	Kirkland_Manholes-2697	234.26	Kirkland_Manholes-2245	234.09	42.8	0.4	8	PVC	0.01	444	2	4	6	1.3		
Kirkland_Main-2173	Kirkland_Manholes-2682	228.77	Kirkland_Manholes-2685	228.01	128.4	0.59	8	PVC	0.01	542	4	12	16	3	SM14-Ex-EX201	
Kirkland_Main-2174	Kirkland_Manholes-2683	239.58	Kirkland_Manholes-2682	228.77	368.9	2.93	8	PVC	0.01	1,207	3	8	11	0.9		
Kirkland_Main-2175	Kirkland_Manholes-2684	244.68	Kirkland_Manholes-2683	239.58	150.1	3.4	8	PVC	0.01	1,300	1	4	5	0.4		
Kirkland_Main-2176	Kirkland_Manholes-2685	228.01	Kirkland_Manholes-2686	221.84	249.2	2.48	8	PVC	0.01	1,109	5	16	21	1.9	SM14-Ex-EX201	
Kirkland_Main-2177	Kirkland_Manholes-2311	256.52	Kirkland_Manholes-2310	256	129.9	0.4	8	PVC	0.01	446	4	13	17	3.7		
Kirkland_Main-2178	Kirkland_Manholes-2688	231.59	Kirkland_Manholes-2687	227.79	162.1	2.34	8	PVC	0.01	1,080	3	8	11	1		
Kirkland_Main-2179	Kirkland_Manholes-2687	227.79	Kirkland_Manholes-2686	221.84	261.7	2.27	8	PVC	0.01	1,063	4	12	16	1.5		
Kirkland_Main-2180	Kirkland_Manholes-2689	235.04	Kirkland_Manholes-2688	231.59	174.6	1.98	8	PVC	0.01	991	2	4	6	0.6		
Kirkland_Main-2184	Kirkland_Manholes-2691	211.09	Kirkland_Manholes-2692	205.03	238.4	2.54	8	PVC	0.01	1,124	12	40	51	4.6	SM14-Ex-EX201	
Kirkland_Main-2185	Kirkland_Manholes-2692	205.03	Kirkland_Manholes-2693	198.67	215	2.96	8	PVC	0.01	1,213	12	44	56	4.6	SM14-Ex-EX201	
Kirkland_Main-2186	Kirkland_Manholes-2693	198.67	Kirkland_Manholes-2694	189.1	61.3	15.61	8	PVC	0.01	2,785	13	48	60	2.2	SM14-Ex-EX201	
Kirkland_Main-2187	Kirkland_Manholes-2695	190.38	Kirkland_Manholes-2694	189.1	280.3	0.46	8	PVC	0.01	476	0	4	4	0.8	SM14-Ex-EX201	
Kirkland_Main-2188	Kirkland_Manholes-2694	189.1	Kirkland_Manholes-2698	186.34	272.4	1.01	8	PVC	0.01	710	13	56	69	9.7	SM14-Ex-EX198	
Kirkland_Main-2189	Kirkland_Manholes-2701	219.11	Kirkland_Manholes-2700	212.52	304.2	2.17	8	PVC	0.01	1,038	8	56	64	6.1		
Kirkland_Main-2190	Kirkland_Manholes-2700	212.52	Kirkland_Manholes-2699	190.07	286.1	7.85	8	PVC	0.01	1,975	10	60	69	3.5	SM14-Ex-EX202	

Existing with Proposed Improvements - Peak Hour Flow - Pipe Capacity Table

Label	Upstream Node	Upstream Invert Elevation (ft)	Downstream Node	Downstream Invert Elevation (ft)	Length (ft)	Slope (%)	Diameter (in)	Material	Manning's n	Design Capacity (gpm)	Domestic Flow (gpm)	I/I Flow (gpm)	Total Flow (gpm)	Percent Full (%)	CIP No.	Notes
Kirkland_Main-2191	Kirkland_Manholes-2699	190.07	Kirkland_Manholes-2696	172.94	342.2	5.01	8	PVC	0.01	1,578	10	64	74	4.7	SM14-Ex-EX202	
Kirkland_Main-2192	Kirkland_Manholes-2706	252.55	Kirkland_Manholes-2704	250.11	196.5	1.24	8	PVC	0.01	786	0	4	4	0.5		
Kirkland_Main-2193	Kirkland_Manholes-2704	250.11	Kirkland_Manholes-2705	234.07	107.2	14.96	8	PVC	0.01	2,727	6	48	54	2		
Kirkland_Main-2194	Kirkland_Manholes-2705	234.07	Kirkland_Manholes-2701	219.11	291.8	5.13	8	PVC	0.01	1,596	8	52	60	3.7		
Kirkland_Main-2195	Kirkland_Manholes-2710	293.33	Kirkland_Manholes-2709	292.14	31.4	3.79	8	PVC	0.01	1,373	0	4	4	0.3		
Kirkland_Main-2197	Kirkland_Manholes-501	145.5	Kirkland_Manholes-502	134.98	294	3.58	8	PVC	0.01	1,334	1	8	9	0.7	SM10	
Kirkland_Main-2198	Kirkland_Manholes-502	134.98	Kirkland_Manholes-1158	124.93	261.4	3.85	8	PVC	0.01	1,383	3	16	19	1.4	SM10	
Kirkland_Main-2199	Kirkland_Manholes-1178	142.08	Kirkland_Manholes-1179	123.76	339.2	5.4	8	PVC	0.01	1,639	5	25	30	1.8	SM10	
Kirkland_Main-2200	Kirkland_Manholes-1177	164.29	Kirkland_Manholes-1178	142.08	352.7	6.3	8	PVC	0.01	1,769	3	16	19	1.1	SM10	
Kirkland_Main-2201	Kirkland_Manholes-1176	174.14	Kirkland_Manholes-1177	164.29	198.1	4.97	8	PVC	0.01	1,572	1	8	9	0.6	SM10	
Kirkland_Main-2202	Kirkland_Manholes-1174	178.7	Kirkland_Manholes-1173	177.85	211.5	0.4	8	PVC	0.01	446	2	8	10	2.2	SM10	Drop Connection
Kirkland_Main-2203	Kirkland_Manholes-1175	174.04	Kirkland_Manholes-1173	166.52	399.1	1.88	8	PVC	0.01	968	2	8	10	1	SM10	
Kirkland_Main-2204	Kirkland_Manholes-1173	166.52	Kirkland_Manholes-1172	164.12	183.3	1.31	8	PVC	0.01	807	6	25	31	3.8	SM10	
Kirkland_Main-2205	Kirkland_Manholes-1172	164.12	Kirkland_Manholes-1171	160.49	157.6	2.3	8	PVC	0.01	1,070	7	33	40	3.7	SM14-Ex-EX79	
Kirkland_Main-2206	Kirkland_Manholes-2890	82	Kirkland_Manholes-1162	78.51	88.5	3.95	8	PVC	0.01	1,400	0	8	359	25.6	SM14-Ex-EX77	
Kirkland_Main-2207	Kirkland_Manholes-514	18.19	Kirkland_Manholes-2958	17.19	133.7	0.75	8	PVC	0.01	610	30	212	242	39.7	SM14-Ex-EX37	
Kirkland_Main-2208	Kirkland_Manholes-493	145.66	Kirkland_Manholes-3107	127.14	403.7	4.59	8	PVC	0.01	1,510	2	8	10	0.7	SM10	
Kirkland_Main-2209	Kirkland_Manholes-496	188.94	Kirkland_Manholes-495	169.48	399.8	4.87	8	PVC	0.01	1,555	2	8	10	0.6	SM10	
Kirkland_Main-2210	Kirkland_Manholes-497	188.11	Kirkland_Manholes-499	185.94	314.9	0.69	8	PVC	0.01	585	14	58	71	12.2	SM10	
Kirkland_Main-2211	Kirkland_Manholes-498	190.16	Kirkland_Manholes-499	185.94	340.1	1.24	8	PVC	0.01	785	3	8	11	1.4	SM10	
Kirkland_Main-2213	Kirkland_Manholes-510	78.8	Kirkland_Manholes-509	76.43	10.6	22.33	15	PVC	0.01	17,810	5	41	46	0.3		
Kirkland_Main-2214	Kirkland_Manholes-513	81.7	Kirkland_Manholes-512	79.85	46	4.02	12	PVC	0.01	4,168	21	156	177	4.2	SM14-Ex-EX76	
Kirkland_Main-2215	Kirkland_Manholes-1825	112.27	Kirkland_Manholes-508	102	349.6	2.94	8	PVC	0.01	1,208	4	16	20	1.7	SM10	
Kirkland_Main-2216	Kirkland_Manholes-508	102	Kirkland_Manholes-507	100.47	381.8	0.4	8	PVC	0.01	446	5	25	30	6.7	SM10	Drop Connection
Kirkland_Main-2217	Kirkland_Manholes-507	85.74	Kirkland_Manholes-506	75.41	39.4	26.19	8	PVC	0.01	3,608	5	33	38	1.1		
Kirkland_Main-2218	Kirkland_Manholes-506	75.41	Kirkland_Manholes-505	74.06	314	0.43	15	PVC	0.01	2,471	88	593	1,031	41.7		
Kirkland_Main-2221	Kirkland_Manholes-505	74.06	Kirkland_Manholes-1824	72.16	261.9	0.73	15	PVC	0.01	3,210	88	601	1,040	32.4		
Kirkland_Main-2222	Kirkland_Manholes-509	76.43	Kirkland_Manholes-506	75.41	337.6	0.3	15	PVC	0.01	2,072	82	552	984	47.5		
Kirkland_Main-2224	Kirkland_Manholes-1160	77.11	Kirkland_Manholes-509	76.43	266.4	0.26	15	PVC	0.01	1,904	77	502	930	48.8		
Kirkland_Main-2225	Kirkland_Manholes-511	79.24	Kirkland_Manholes-1161	78.67	198.1	0.29	15	PVC	0.01	2,022	21	173	194	9.6		
Kirkland_Main-2226	Kirkland_Manholes-512	79.85	Kirkland_Manholes-511	79.24	306.1	0.2	15	PVC	0.01	1,683	21	165	186	11		
Kirkland_Main-2228	Kirkland_Manholes-1533	294.07	Kirkland_Manholes-1532	269.21	121	20.55	8	PVC	0.01	3,196	2	12	14	0.4	SM14-Ex-EX126	
Kirkland_Main-2229	Kirkland_Manholes-1532	269.21	Kirkland_Manholes-1531	265.03	88.5	4.72	8	PVC	0.01	1,532	2	16	18	1.2	SM14-Ex-EX126	
Kirkland_Main-2230	Kirkland_Manholes-1211	186.99	Kirkland_Manholes-1197	181.82	133.6	3.87	8		0.012	1,156	1	33	34	3		
Kirkland_Main-2231	Kirkland_Manholes-1531	265.03	Kirkland_Manholes-1530	229.92	439.6	7.99	8	PVC	0.01	1,992	10	28	38	1.9	SM14-Ex-EX125	
Kirkland_Main-2232	Kirkland_Manholes-1530	229.92	Kirkland_Manholes-1529	223.45	269.7	2.4	8	PVC	0.01	1,092	33	107	141	12.9	SM14-Ex-EX121	
Kirkland_Main-2233	Kirkland_Manholes-1529	223.45	Kirkland_Manholes-1528	217.87	160.3	3.48	8	PVC	0.01	1,316	35	111	146	11.1	SM14-Ex-EX121	
Kirkland_Main-2235	Kirkland_Manholes-1249	223.25	Kirkland_Manholes-1250	210.15	250.9	5.22	8	PVC	0.01	1,611	15	99	114	7.1	SM14-Ex-EX65	
Kirkland_Main-2236	Kirkland_Manholes-1246	238.47	Kirkland_Manholes-1247	236.99	105.6	1.4	8	PVC	0.01	835	11	58	69	8.2	SM14-Ex-EX65	
Kirkland_Main-2237	Kirkland_Manholes-1248	254.12	Kirkland_Manholes-1247	236.99	222.2	7.71	8	PVC	0.01	1,958	1	8	9	0.5	SM14-Ex-EX97	
Kirkland_Main-2238	Kirkland_Manholes-1245	243.41	Kirkland_Manholes-1246	238.47	272.7	1.81	8	PVC	0.01	949	9	49	59	6.2	SM14-Ex-EX65	
Kirkland_Main-2239	Kirkland_Manholes-1244	254.14	Kirkland_Manholes-1245	243.41	231.8	4.63	8	PVC	0.01	1,517	2	8	10	0.6	SM14-Ex-EX65	
Kirkland_Main-2240	Kirkland_Manholes-1242	244.28	Kirkland_Manholes-208	241.09	154	2.07	8	PVC	0.01	1,015	2	9	11	1.1	SM14-Ex-EX61	
Kirkland_Main-2241	Kirkland_Manholes-1237	263.8	Kirkland_Manholes-1236	256.67	250.6	2.84	8	PVC	0.01	1,189	1	4	5	0.4	SM14-Ex-EX60	
Kirkland_Main-2242	Kirkland_Manholes-1239	270.66	Kirkland_Manholes-1238	263.26	225.6	3.28	8	PVC	0.01	1,277	3	8	11	0.9	SM14-Ex-EX95	
Kirkland_Main-2244	Kirkland_Manholes-1234	275.2	Kirkland_Manholes-1233	274.4	31.3	2.55	8	PVC	0.01	1,127	1	8	9	0.8	SM14-Ex-EX96	
Kirkland_Main-2245	Kirkland_Manholes-1233	274.4	Kirkland_Manholes-1232	271.55	317	0.9	8	PVC	0.01	669	5	25	30	4.5	SM14-Ex-EX96	
Kirkland_Main-2246	Kirkland_Manholes-1232	271.55	Kirkland_Manholes-1231	254.08	347.6	5.03	8	PVC	0.01	1,581	8	33	41	2.6	SM14-Ex-EX96	
Kirkland_Main-2247	Kirkland_Manholes-1231	254.08	Kirkland_Manholes-1230	236.32	352.2	5.04	8	PVC	0.01	1,583	12	41	53	3.3	SM14-Ex-EX96	
Kirkland_Main-2248	Kirkland_Manholes-1414	476.69	Kirkland_Manholes-1415	475.19	382.9	0.39	8	PVC	0.01	441	1	20	20	4.6		
Kirkland_Main-2249	Kirkland_Manholes-1416	475.58	Kirkland_Manholes-1415	475.19	141	0.28	8	PVC	0.01	371	3	20	23	6.1		
Kirkland_Main-2250	Kirkland_Manholes-1417	477.64	Kirkland_Manholes-1416	475.58	44.3	4.65	8	PVC	0.01	1,521	2	16	18	1.2		
Kirkland_Main-2251	Kirkland_Manholes-1419	480.31	Kirkland_Manholes-1418	477.42	188.2	1.54	8	PVC	0.01	874	1	12	12	1.4		
Kirkland_Main-2252	Kirkland_Manholes-1420	487.42	Kirkland_Manholes-1419	480.31	251.4	2.83	8	PVC	0.01	1,186	0	8	8	0.7		
Kirkland_Main-2253	Kirkland_Manholes-1421	490.08	Kirkland_Manholes-1420	487.42	280.7	0.95	8	PVC	0.01	686	0	4	4	0.6		
Kirkland_Main-2255	Kirkland_Manholes-1422	436.01	Kirkland_Manholes-1423	431.09	115.7	4.25	8	PVC	0.01	1,454	4	2	6	0.4		
Kirkland_Main-2256	Kirkland_Manholes-1423	431.09	Kirkland_Manholes-1424	424.73	75.1	8.47	8	PVC	0.01	2,052	5	5	10	0.5		
Kirkland_Main-2257	Kirkland_Manholes-1424	424.73	Kirkland_Manholes-1425	416.33	120.8	6.95	8	PVC	0.01	1,859	6	7	13	0.7		
Kirkland_Main-2258	Kirkland_Manholes-1425	416.33	Kirkland_Manholes-2514	400.04	156.3	10.42	8	PVC	0.01	2,276	8	9	17	0.8		
Kirkland_Main-2260	Kirkland_Manholes-1426	513.73	Kirkland_Manholes-1427	513.21	150.6	0.34	8	PVC	0.01	413	2	4	6	1.5		
Kirkland_Main-2261	Kirkland_Manholes-2186	104.5	Kirkland_Manholes-2185	103.23	40.6	3.13	8	PVC	0.01	1,248	21	41	62	4.9		
Kirkland_Main-2262	Kirkland_Manholes-2188	116.01	Kirkland_Manholes-2187	114.37	29.7	5.52	8	PVC	0.01	1,657	0	8	9	0.5		

Existing with Proposed Improvements - Peak Hour Flow - Pipe Capacity Table

Label	Upstream Node	Upstream Invert Elevation (ft)	Downstream Node	Downstream Invert Elevation (ft)	Length (ft)	Slope (%)	Diameter (in)	Material	Manning's n	Design Capacity (gpm)	Domestic Flow (gpm)	I/I Flow (gpm)	Total Flow (gpm)	Percent Full (%)	CIP No.	Notes
Kirkland_Main-2263	Kirkland_Manholes-2192	135.5	Kirkland_Manholes-2191	134.63	54	1.61	8	PVC	0.01	895	0	8	8	0.9		
Kirkland_Main-2265	Kirkland_Manholes-2120	156.16	O-33	155.88	68.2	0.41	8	PVC	0.01	452	2	4	6	1.3		
Kirkland_Main-2266	Kirkland_Manholes-2121	179.17	Kirkland_Manholes-2122	169.1	148.2	6.79	8	PVC	0.01	1,838	1	4	5	0.3	SM14-Ex-EX238	
Kirkland_Main-2267	Kirkland_Manholes-2122	169.1	Kirkland_Manholes-2123	164.83	234.6	1.82	8	PVC	0.01	951	2	8	10	1.1	SM14-Ex-EX238	
Kirkland_Main-2268	Kirkland_Manholes-2200	29.87	Kirkland_Manholes-2202	26.91	11.2	26.5	8	PVC	0.01	3,629	49	19	68	1.9		Slope confirmed by as-builts
Kirkland_Main-2270	Kirkland_Manholes-2209	69.6	Kirkland_Manholes-2206	66.42	347.3	0.92	8	PVC	0.01	675	1	8	9	1.4	SM8	
Kirkland_Main-2271	Kirkland_Manholes-2208	66.31	Kirkland_Manholes-2207	65.6	145.2	0.49	8	PVC	0.01	493	0	6	7	1.4	SM14-Ex-EX189	Drop Connection
Kirkland_Main-2272	Kirkland_Manholes-2216	56.6	Kirkland_Manholes-2217	22.48	221.2	15.42	8	PVC	0.01	2,769	4	32	37	1.3		
Kirkland_Main-2273	Kirkland_Manholes-2215	67.8	Kirkland_Manholes-2214	67.15	122.4	0.53	8	PVC	0.01	514	2	6	8	1.6		
Kirkland_Main-2274	Kirkland_Manholes-2214	67.15	Kirkland_Manholes-2213	66.3	36.8	2.31	8	PVC	0.01	1,071	2	13	15	1.4		
Kirkland_Main-2275	Kirkland_Manholes-2213	66.3	Kirkland_Manholes-2216	56.6	199.9	4.85	8	PVC	0.01	1,553	3	26	29	1.9		
Kirkland_Main-2276	Kirkland_Manholes-2212	72.13	Kirkland_Manholes-2213	66.3	100	5.83	8	PVC	0.01	1,702	1	6	8	0.5	SM14-Ex-EX190	
Kirkland_Main-2278	Kirkland_Manholes-2124	217.78	Kirkland_Manholes-2303	195.57	353.2	6.29	12	PVC	0.01	5,212	253	886	1,139	21.9	SM14-Ex-EX248	
Kirkland_Main-2280	Kirkland_Manholes-1463	498.43	Kirkland_Manholes-1464	490.77	337.1	2.27	8	PVC	0.01	1,063	6	16	22	2	SM14-Ex-EX271	
Kirkland_Main-2281	Kirkland_Manholes-1465	496.7	Kirkland_Manholes-1464	490.77	350	1.69	8	PVC	0.01	917	5	12	17	1.9	SM14-Ex-EX272	
Kirkland_Main-2282	Kirkland_Manholes-1464	490.77	Kirkland_Manholes-1469	490.09	171.1	0.4	8	PVC	0.01	446	12	32	44	9.9	SM14-Ex-EX271	
Kirkland_Main-2283	Kirkland_Manholes-1466	501.75	Kirkland_Manholes-1465	496.7	399.1	1.27	8	PVC	0.01	793	3	8	11	1.3	SM14-Ex-EX272	
Kirkland_Main-2284	Kirkland_Manholes-1467	507	Kirkland_Manholes-1466	501.75	336.1	1.56	8	PVC	0.01	881	1	4	5	0.5	SM14-Ex-EX272	
Kirkland_Main-2285	Kirkland_Manholes-1470	502.07	Kirkland_Manholes-1475	484.92	351.8	4.88	8	PVC	0.01	1,557	1	4	5	0.3	SM14-Ex-EX268	
Kirkland_Main-2286	Kirkland_Manholes-1471	502.1	Kirkland_Manholes-1472	489.92	152.5	7.99	8	PVC	0.01	1,993	1	4	5	0.2	SM14-Ex-EX267	
Kirkland_Main-2287	Kirkland_Manholes-1472	489.92	Kirkland_Manholes-1473	489.3	149.9	0.41	8	PVC	0.01	453	3	8	11	2.3	SM14-Ex-EX267	
Kirkland_Main-2288	Kirkland_Manholes-1473	489.3	Kirkland_Manholes-1474	483.04	397.5	1.57	8	PVC	0.01	885	4	12	16	1.8	SM14-Ex-EX267	
Kirkland_Main-2289	Kirkland_Manholes-1474	483.04	Kirkland_Manholes-1478	480.02	383.8	0.79	8	PVC	0.01	625	6	16	22	3.4	SM14-Ex-EX267	
Kirkland_Main-2290	Kirkland_Manholes-1475	484.92	Kirkland_Manholes-1476	483.18	394.8	0.44	8	PVC	0.01	468	2	8	10	2.1	SM14-Ex-EX268	
Kirkland_Main-2291	Kirkland_Manholes-1476	483.18	Kirkland_Manholes-1477	477.36	143.4	4.06	8	PVC	0.01	1,421	3	12	15	1	SM14-Ex-EX268	
Kirkland_Main-2292	Kirkland_Manholes-1477	477.36	Kirkland_Manholes-1481	462.54	116.7	12.7	8	PVC	0.01	2,512	3	16	19	0.8	SM14-Ex-EX268	
Kirkland_Main-2293	Kirkland_Manholes-1478	480.02	Kirkland_Manholes-1479	473.98	182.8	3.3	8	PVC	0.01	1,282	7	20	27	2.1	SM14-Ex-EX267	
Kirkland_Main-2294	Kirkland_Manholes-1479	473.98	Kirkland_Manholes-1483	455.88	188.4	9.61	8	PVC	0.01	2,185	8	24	32	1.5	SM14-Ex-EX267	
Kirkland_Main-2295	Kirkland_Manholes-1482	457.77	Kirkland_Manholes-1483	455.88	220.6	0.86	8	PVC	0.01	653	55	242	298	45.6	SM14-Ex-EX214	
Kirkland_Main-2296	Kirkland_Manholes-1483	455.88	Kirkland_Manholes-2042	455.6	242	0.12	12	PVC	0.01	707	64	270	334	47.2	SM14-Ex-EX214	
Kirkland_Main-2297	Kirkland_Manholes-1480	465.84	Kirkland_Manholes-1482	457.77	216.4	3.73	8	PVC	0.01	1,362	51	219	270	19.8	SM14-Ex-EX214	
Kirkland_Main-2298	Kirkland_Manholes-2162	123.07	Kirkland_Manholes-2139	96.6	399.7	6.62	8	PVC	0.01	1,814	4	16	21	1.1	SM14-Ex-EX194	
Kirkland_Main-2299	Kirkland_Manholes-2161	148.95	Kirkland_Manholes-2162	123.07	410.6	6.3	8	PVC	0.01	1,770	1	8	9	0.5	SM14-Ex-EX194	
Kirkland_Main-2300	Kirkland_Manholes-2239	125.2	Kirkland_Manholes-2238	92.13	326.8	10.12	8	PVC	0.01	2,243	2	6	8	0.3	SM14-Ex-EX224	
Kirkland_Main-2301	Kirkland_Manholes-2241	73.4	Kirkland_Manholes-2240	69.07	226.1	1.92	8	PVC	0.01	976	2	6	8	0.8		
Kirkland_Main-2302	Kirkland_Manholes-2159	84.71	Kirkland_Manholes-2240	69.07	248.4	6.3	8	PVC	0.01	1,769	18	65	83	4.7		
Kirkland_Main-2303	Kirkland_Manholes-2243	51.95	Kirkland_Manholes-2244	43.69	203.1	4.07	8	PVC	0.01	1,422	2	6	8	0.6		
Kirkland_Main-2304	Kirkland_Manholes-2240	69.07	Kirkland_Manholes-2244	43.69	271.1	9.36	8	PVC	0.01	2,157	21	78	99	4.6		
Kirkland_Main-2305	Kirkland_Manholes-2244	43.69	Kirkland_Manholes-2155	42.84	213.7	0.4	8	PVC	0.01	446	26	91	117	26.3		Drop Connection
Kirkland_Main-2306	Kirkland_Manholes-2494	170.93	Kirkland_Manholes-2132	159.52	411.9	2.77	8	PVC	0.01	1,173	16	24	40	3.4	SM14-Ex-EX236	
Kirkland_Main-2307	Kirkland_Manholes-2242	36.17	Kirkland_Manholes-2317	17.2	251	7.56	8	PVC	0.01	1,938	2	6	8	0.4	SM14-Ex-EX191	
Kirkland_Main-2308	Kirkland_Manholes-2229	22.53	Kirkland_Manholes-2313	22.37	40.9	0.4	8	PVC	0.01	446	15	39	54	12.1		Drop Connection
Kirkland_Main-2309	Kirkland_Manholes-2228	23.08	Kirkland_Manholes-2314	22.81	66.4	0.4	8	PVC	0.01	446	18	78	96	21.5		Drop Connection
Kirkland_Main-2311	Kirkland_Manholes-2257	348.17	Kirkland_Manholes-2256	329.88	184.1	9.94	8	PVC	0.01	2,222	1	4	5	0.2	SM14-Ex-EX254	
Kirkland_Main-2312	Kirkland_Manholes-2267	393.07	Kirkland_Manholes-2266	392.8	100.8	0.27	8	PVC	0.01	365	2	16	18	4.9		
Kirkland_Main-2313	Kirkland_Manholes-2715	29.78	Kirkland_Manholes-2716	29.3	129	0.37	12	PVC	0.01	1,268	74	18	92	7.3		
Kirkland_Main-2314	Kirkland_Manholes-2716	29.3	Kirkland_Manholes-2717	21.61	141.2	5.45	12	PVC	0.01	4,851	74	24	98	2		
Kirkland_Main-2315	Kirkland_Manholes-2717	21.61	Kirkland_Manholes-2718	21.4	363.5	0.06	12	PVC	0.01	500	74	30	104	20.8		
Kirkland_Main-2316	Kirkland_Manholes-2052	419.8	Kirkland_Manholes-2280	418.85	171.1	0.56	8	PVC	0.01	525	1	4	5	0.9	SM14-Ex-EX262	
Kirkland_Main-2317	Kirkland_Manholes-2280	418.85	Kirkland_Manholes-2279	418	153.8	0.55	8	PVC	0.01	524	2	8	10	1.9	SM14-Ex-EX262	
Kirkland_Main-2318	Kirkland_Manholes-2274	417.36	Kirkland_Manholes-2273	414.69	101.2	2.64	8	PVC	0.01	1,145	1	4	5	0.5		
Kirkland_Main-2319	Kirkland_Manholes-2279	418	Kirkland_Manholes-2268	401.9	291.9	5.52	8	PVC	0.01	1,656	3	12	15	0.9	SM14-Ex-EX262	
Kirkland_Main-2320	Kirkland_Manholes-2268	401.9	Kirkland_Manholes-2269	398.2	115.6	3.2	8	PVC	0.01	1,262	14	64	78	6.2	SM14-Ex-EX261	
Kirkland_Main-2321	Kirkland_Manholes-2270	403.21	Kirkland_Manholes-2269	398.2	107.6	4.66	8	PVC	0.01	1,521	4	36	40	2.6		
Kirkland_Main-2322	Kirkland_Manholes-2273	414.69	Kirkland_Manholes-2272	410.23	107.4	4.15	8	PVC	0.01	1,437	2	8	10	0.7		
Kirkland_Main-2323	Kirkland_Manholes-2272	410.23	Kirkland_Manholes-2271	405.49	51.3	9.24	8	PVC	0.01	2,143	2	12	14	0.6		
Kirkland_Main-2324	Kirkland_Manholes-2271	405.49	Kirkland_Manholes-2270	403.21	91.2	2.5	8	PVC	0.01	1,115	4	32	36	3.2		
Kirkland_Main-2325	Kirkland_Manholes-2276	410.45	Kirkland_Manholes-2277	408.15	110.4	2.08	8	PVC	0.01	1,017	2	8	10	0.9		
Kirkland_Main-2326	Kirkland_Manholes-2277	408.15	Kirkland_Manholes-2278	406.74	80.9	1.74	8	PVC	0.01	931	2	12	14	1.5		
Kirkland_Main-2327	Kirkland_Manholes-1228	189.87	Kirkland_Manholes-1227	174.57	207.5	7.37	8	PVC	0.01	1,915	22	74	96	5	SM14-Ex-EX96	
Kirkland_Main-2329	Kirkland_Manholes-1226	185.47	Kirkland_Manholes-1227	174.57	349.3	3.12	8	PVC	0.01	1,245	2	8	11	0.8	SM14-Ex-EX93	
Kirkland_Main-2333	Kirkland_Manholes-1209	251.94	Kirkland_Manholes-1208	237.71	314.7	4.52	8	PVC	0.01	1,499	10	31	41	2.7	SM14-Ex-EX90	

Existing with Proposed Improvements - Peak Hour Flow - Pipe Capacity Table

Label	Upstream Node	Upstream Invert Elevation (ft)	Downstream Node	Downstream Invert Elevation (ft)	Length (ft)	Slope (%)	Diameter (in)	Material	Manning's n	Design Capacity (gpm)	Domestic Flow (gpm)	I/I Flow (gpm)	Total Flow (gpm)	Percent Full (%)	CIP No.	Notes
Kirkland_Main-2335	Kirkland_Manholes-1210	257.02	Kirkland_Manholes-1209	251.94	317.5	1.6	8	PVC	0.01	892	7	23	30	3.3	SM14-Ex-EX90	
Kirkland_Main-2341	Kirkland_Manholes-1214	261.31	Kirkland_Manholes-1215	243.02	404.6	4.52	8	PVC	0.01	1,499	5	11	16	1.1	SM14-Ex-EX90	
Kirkland_Main-2342	Kirkland_Manholes-1241	267.65	Kirkland_Manholes-1215	243.02	241.5	10.2	8	PVC	0.01	2,252	3	4	7	0.3	SM14-Ex-EX63	
Kirkland_Main-2343	Kirkland_Manholes-1215	243.02	Kirkland_Manholes-1134	223.76	275.3	7	8	PVC	0.01	1,865	10	19	29	1.5	SM14-Ex-EX63	
Kirkland_Main-2344	Kirkland_Manholes-1217	232.97	Kirkland_Manholes-1218	220.85	252.7	4.8	8	PVC	0.01	1,544	1	4	5	0.3	SM14-Ex-EX59	
Kirkland_Main-2345	Kirkland_Manholes-1270	246.8	Kirkland_Manholes-1245	243.41	285.9	1.19	8	PVC	0.01	768	1	8	9	1.2	SM14-Ex-EX64	
Kirkland_Main-2348	Kirkland_Manholes-1276	172.95	Kirkland_Manholes-1279	163.99	169.3	5.29	8	PVC	0.01	1,622	4	16	20	1.2		
Kirkland_Main-2349	Kirkland_Manholes-1569	157.57	Kirkland_Manholes-1293	152.35	333.3	1.57	8	PVC	0.01	882	4	8	12	1.4	SM14-Ex-EX113	
Kirkland_Main-2350	Kirkland_Manholes-1293	152.35	Kirkland_Manholes-1292	148.28	368.4	1.1	8	PVC	0.01	741	8	16	24	3.2	SM14-Ex-EX113	
Kirkland_Main-2351	Kirkland_Manholes-1568	145.18	Kirkland_Manholes-1297	132.74	335	3.71	8	PVC	0.01	1,359	2	8	11	0.8	SM14-Ex-EX114	
Kirkland_Main-2352	Kirkland_Manholes-1297	132.74	Kirkland_Manholes-1296	129.32	308.3	1.11	8	PVC	0.01	743	4	16	20	2.7	SM14-Ex-EX114	
Kirkland_Main-2353	Kirkland_Manholes-1281	154.69	Kirkland_Manholes-1292	148.28	310.6	2.06	8	PVC	0.01	1,013	46	247	293	28.9	SM14-Ex-EX102	
Kirkland_Main-2354	Kirkland_Manholes-1292	148.28	Kirkland_Manholes-1296	129.32	322	5.89	8	PVC	0.01	1,711	56	272	327	19.1	SM14-Ex-EX102	
Kirkland_Main-2357	Kirkland_Manholes-1266	188.85	Kirkland_Manholes-1264	172.1	141.2	11.87	8	PVC	0.01	2,429	1	8	9	0.4		
Kirkland_Main-2358	Kirkland_Manholes-1264	172.1	Kirkland_Manholes-1265	168.12	70.1	5.67	8	PVC	0.01	1,679	1	16	18	1.1		
Kirkland_Main-2363	Kirkland_Manholes-1273	182.86	Kirkland_Manholes-1274	175.64	151.8	4.76	8	PVC	0.01	1,538	5	25	30	1.9		
Kirkland_Main-2364	Kirkland_Manholes-1252	181.71	Kirkland_Manholes-1277	163.83	245.6	7.28	8	PVC	0.01	1,902	37	189	226	11.9	SM14-Ex-EX101	
Kirkland_Main-2365	Kirkland_Manholes-1277	163.83	Kirkland_Manholes-1278	160.09	110.9	3.37	8	PVC	0.01	1,295	38	198	235	18.2	SM14-Ex-EX102	
Kirkland_Main-2366	Kirkland_Manholes-1278	160.09	Kirkland_Manholes-1280	156.25	144.5	2.66	8	PVC	0.01	1,149	43	231	273	23.8	SM14-Ex-EX102	
Kirkland_Main-2367	Kirkland_Manholes-1280	156.25	Kirkland_Manholes-1281	154.69	317.7	0.49	8	PVC	0.01	494	45	239	284	57.4	SM14-Ex-EX102	
Kirkland_Main-2369	Kirkland_Manholes-1311	230.66	Kirkland_Manholes-1312	230.27	96.9	0.4	8	PVC	0.01	446	0	4	4	1		
Kirkland_Main-2370	Kirkland_Manholes-1313	230.7	Kirkland_Manholes-1312	230.27	76.5	0.56	8	PVC	0.01	528	3	13	16	3.1		
Kirkland_Main-2371	Kirkland_Manholes-1312	230.27	Kirkland_Manholes-1306	225.07	369.5	1.41	8	PVC	0.01	836	4	21	25	3		
Kirkland_Main-2372	Kirkland_Manholes-1513	263.11	Kirkland_Manholes-1515	261.7	138	1.02	8	PVC	0.01	713	33	143	176	24.8	SM14-Ex-EX131	
Kirkland_Main-2373	Kirkland_Manholes-1508	264.2	Kirkland_Manholes-1514	263.47	179.7	0.41	8	PVC	0.01	450	31	131	162	36	SM14-Ex-EX131	
Kirkland_Main-2374	Kirkland_Manholes-1684	76.22	Kirkland_Manholes-1683	75.33	41.4	2.15	8	PVC	0.01	1,034	3	8	11	1		
Kirkland_Main-2375	Kirkland_Manholes-1851	275	Kirkland_Manholes-1316	272.4	254.5	1.02	8	PVC	0.01	713	1	8	9	1.3		
Kirkland_Main-2376	Kirkland_Manholes-1317	271.64	Kirkland_Manholes-924	268.15	334	1.04	12	PVC	0.01	2,125	108	425	533	25.1		
Kirkland_Main-2377	Kirkland_Manholes-2984	277.63	Kirkland_Manholes-1317	271.64	132.6	4.52	10	PVC	0.01	2,717	106	373	479	17.6		
Kirkland_Main-2378	Kirkland_Manholes-1371	376.15	Kirkland_Manholes-3081	373.55	185	1.41	8	PVC	0.01	836	65	179	244	29.2		
Kirkland_Main-2379	Kirkland_Manholes-1319	372.4	Kirkland_Manholes-1318	358.26	123	11.5	8	PVC	0.01	2,391	67	191	258	10.8		
Kirkland_Main-2380	Kirkland_Manholes-1318	358.26	Kirkland_Manholes-1320	342.61	140.9	11.1	10	PVC	0.01	4,260	67	195	262	6.2		
Kirkland_Main-2381	Kirkland_Manholes-1320	342.61	Kirkland_Manholes-1326	321.42	151.5	13.98	10	PVC	0.01	4,780	92	262	354	7.4		
Kirkland_Main-2382	Kirkland_Manholes-1514	263.47	Kirkland_Manholes-1513	263.11	127.9	0.28	8	PVC	0.01	374	32	135	167	44.6	SM14-Ex-EX131	
Kirkland_Main-2383	Kirkland_Manholes-1507	265.94	Kirkland_Manholes-1508	264.2	288.2	0.6	8	PVC	0.01	547	27	115	143	26	SM14-Ex-EX131	
Kirkland_Main-2384	Kirkland_Manholes-1322	342.78	Kirkland_Manholes-1320	342.61	36.2	0.47	8	PVC	0.01	483	24	64	88	18.1		
Kirkland_Main-2385	Kirkland_Manholes-1321	355.4	Kirkland_Manholes-1322	342.78	269.6	4.68	8	PVC	0.01	1,525	23	60	83	5.4		
Kirkland_Main-2386	Kirkland_Manholes-1335	367.98	Kirkland_Manholes-1321	355.4	137.9	9.12	8	PVC	0.01	2,129	22	56	78	3.6		
Kirkland_Main-2387	Kirkland_Manholes-1323	332.91	Kirkland_Manholes-1324	332.34	49.4	1.15	8	PVC	0.01	757	1	4	5	0.7		
Kirkland_Main-2388	Kirkland_Manholes-1324	332.34	Kirkland_Manholes-1325	323.2	121	7.55	8	PVC	0.01	1,938	1	8	9	0.5		
Kirkland_Main-2389	Kirkland_Manholes-1325	323.2	Kirkland_Manholes-1326	321.42	174.1	1.02	8	PVC	0.01	713	2	12	14	2		
Kirkland_Main-2390	Kirkland_Manholes-1326	321.42	Kirkland_Manholes-1339	314.87	128.9	5.08	10	PVC	0.01	2,880	96	290	386	13.4		
Kirkland_Main-2391	Kirkland_Manholes-1337	323.9	Kirkland_Manholes-1326	321.42	30.5	8.12	8	PVC	0.01	2,009	1	12	13	0.7		
Kirkland_Main-2392	Kirkland_Manholes-1327	326.71	Kirkland_Manholes-1337	323.9	27.1	10.37	8	PVC	0.01	2,271	1	8	9	0.4		
Kirkland_Main-2393	Kirkland_Manholes-1328	394.1	Kirkland_Manholes-1329	393.5	241.8	0.25	8	PVC	0.01	351	2	28	30	8.6		
Kirkland_Main-2394	Kirkland_Manholes-1329	393.5	Kirkland_Manholes-1330	392.47	187.9	0.55	8	PVC	0.01	522	4	32	35	6.8		
Kirkland_Main-2395	Kirkland_Manholes-1330	392.47	Kirkland_Manholes-1332	391.73	102.7	0.72	8	PVC	0.01	597	4	36	40	6.6		
Kirkland_Main-2396	Kirkland_Manholes-1332	391.73	Kirkland_Manholes-1333	390.44	145.6	0.89	8	PVC	0.01	664	20	44	64	9.6	SM14-Ex-EX177	Drop Connection
Kirkland_Main-2397	Kirkland_Manholes-1331	393.51	Kirkland_Manholes-1332	391.73	79.5	2.24	8	PVC	0.01	1,054	0	4	4	0.4	SM14-Ex-EX177	
Kirkland_Main-2398	Kirkland_Manholes-1333	387.1	Kirkland_Manholes-1334	373.64	147.7	9.12	8	PVC	0.01	2,129	21	48	68	3.2		
Kirkland_Main-2399	Kirkland_Manholes-1334	373.64	Kirkland_Manholes-1335	367.98	202.7	2.79	8	PVC	0.01	1,178	21	52	73	6.2		
Kirkland_Main-2400	Kirkland_Manholes-1336	341.09	Kirkland_Manholes-1327	326.71	166.6	8.63	8	PVC	0.01	2,071	1	4	5	0.2		
Kirkland_Main-2401	Kirkland_Manholes-1338	316.17	Kirkland_Manholes-1339	314.87	207.4	0.63	8	PVC	0.01	557	1	4	5	0.9		
Kirkland_Main-2402	Kirkland_Manholes-1339	314.87	Kirkland_Manholes-1342	287.41	238.7	11.5	10	PVC	0.01	4,335	98	298	396	9.1		Drop Connection
Kirkland_Main-2403	Kirkland_Manholes-1345	289.73	Kirkland_Manholes-1344	287.44	243.6	0.94	8	PVC	0.01	684	1	4	5	0.7		
Kirkland_Main-2404	Kirkland_Manholes-1344	287.44	Kirkland_Manholes-1343	283.8	35.3	10.32	8	PVC	0.01	2,265	2	8	10	0.4		
Kirkland_Main-2405	Kirkland_Manholes-1343	283.8	Kirkland_Manholes-1342	283.15	24.6	2.63	8	PVC	0.01	1,144	2	12	13	1.2		
Kirkland_Main-2406	Kirkland_Manholes-1340	293.32	Kirkland_Manholes-1342	293.12	51.1	0.4	8	PVC	0.01	446	7	56	62	14		Drop Connection
Kirkland_Main-2407	Kirkland_Manholes-1341	299.38	Kirkland_Manholes-1340	293.32	143.1	4.24	8	PVC	0.01	1,451	6	52	57	4		
Kirkland_Main-2408	Kirkland_Manholes-1346	416.9	Kirkland_Manholes-1351	414.82	383.4	0.54	8	PVC	0.01	519	0	4	4	0.8	SM14-Ex-EX181	
Kirkland_Main-2409	Kirkland_Manholes-1351	414.82	Kirkland_Manholes-1350	414.2	207.6	0.3	12	PVC	0.01	1,136	52	179	231	20.4	SM14-Ex-EX215	
Kirkland_Main-2410	Kirkland_Manholes-1350	414.2	Kirkland_Manholes-1917	413.2	125.7	0.8	12	PVC	0.01	1,854	55	187	242	13.1	SM14-Ex-EX215	

Existing with Proposed Improvements - Peak Hour Flow - Pipe Capacity Table

Label	Upstream Node	Upstream Invert Elevation (ft)	Downstream Node	Downstream Invert Elevation (ft)	Length (ft)	Slope (%)	Diameter (in)	Material	Manning's n	Design Capacity (gpm)	Domestic Flow (gpm)	I/I Flow (gpm)	Total Flow (gpm)	Percent Full (%)	CIP No.	Notes
Kirkland_Main-2411	Kirkland_Manholes-1373	425.99	Kirkland_Manholes-1350	414.2	373.4	3.16	8	PVC	0.01	1,253	2	4	6	0.5	SM14-Ex-EX217	
Kirkland_Main-2412	Kirkland_Manholes-612	119.17	Kirkland_Manholes-613	104.8	247.7	5.8	8	PVC	0.01	1,698	1	8	9	0.5	SM14-Ex-EX149	
Kirkland_Main-2413	Kirkland_Manholes-613	104.8	Kirkland_Manholes-614	87.89	231.1	7.32	8	PVC	0.01	1,907	3	16	20	1	SM14-Ex-EX149	
Kirkland_Main-2414	Kirkland_Manholes-609	139.22	Kirkland_Manholes-1799	133.76	308.5	1.77	8	PVC	0.01	938	2	8	10	1.1	SM14-Ex-EX146	
Kirkland_Main-2417	Kirkland_Manholes-611	126.2	Kirkland_Manholes-610	123.3	146.2	1.98	8	PVC	0.01	993	1	8	9	0.9	SM14-Ex-EX148	
Kirkland_Main-2418	Kirkland_Manholes-610	123.3	Kirkland_Manholes-1801	112.29	320.9	3.43	8	PVC	0.01	1,306	2	16	19	1.4	SM14-Ex-EX148	
Kirkland_Main-2420	Kirkland_Manholes-585	162.05	Kirkland_Manholes-1797	142.57	517.3	3.77	8	PVC	0.01	1,368	1	8	10	0.7	SM14-Ex-EX144	
Kirkland_Main-2424	Kirkland_Manholes-582	179.11	Kirkland_Manholes-583	174.24	247.1	1.97	8	PVC	0.01	990	2	8	10	1	SM14-Ex-EX91	
Kirkland_Main-2425	Kirkland_Manholes-583	174.24	Kirkland_Manholes-1796	160.8	295.1	4.55	8	PVC	0.01	1,505	3	16	20	1.3	SM14-Ex-EX91	
Kirkland_Main-2426	Kirkland_Manholes-586	156.07	Kirkland_Manholes-587	133.23	320.6	7.12	8	PVC	0.01	1,882	1	8	9	0.5	SM14-Ex-EX145	
Kirkland_Main-2427	Kirkland_Manholes-587	133.23	Kirkland_Manholes-588	128.35	150.1	3.25	8	PVC	0.01	1,271	3	16	20	1.6	SM14-Ex-EX145	
Kirkland_Main-2428	Kirkland_Manholes-580	147.12	Kirkland_Manholes-588	128.35	316.6	5.93	8	PVC	0.01	1,717	29	115	144	8.4	SM14-Ex-EX96	
Kirkland_Main-2430	Kirkland_Manholes-581	170.5	Kirkland_Manholes-580	147.12	349.2	6.7	8	PVC	0.01	1,824	2	8	10	0.6	SM14-Ex-EX94	
Kirkland_Main-2431	Kirkland_Manholes-588	128.35	Kirkland_Manholes-606	111.69	288.6	5.77	8	PVC	0.01	1,694	33	140	173	10.2	SM14-Ex-EX96	
Kirkland_Main-2432	Kirkland_Manholes-1506	266.15	Kirkland_Manholes-1507	265.94	137.9	0.15	8	PVC	0.01	275	27	111	138	50.2		
Kirkland_Main-2433	Kirkland_Manholes-605	109.94	Kirkland_Manholes-604	92.41	437.3	4.01	8	PVC	0.01	1,412	7	8	15	1	SM14-Ex-EX160	
Kirkland_Main-2434	Kirkland_Manholes-590	118.3	Kirkland_Manholes-591	102.05	327.5	4.96	8	PVC	0.01	1,571	5	16	21	1.4	SM14-Ex-EX158	
Kirkland_Main-2435	Kirkland_Manholes-591	102.05	Kirkland_Manholes-592	96.93	331.1	1.55	8	PVC	0.01	877	8	25	33	3.8	SM14-Ex-EX158	
Kirkland_Main-2436	Kirkland_Manholes-592	96.93	Kirkland_Manholes-602	90.22	292.3	2.3	8	PVC	0.01	1,068	71	370	442	41.4	SM5	
Kirkland_Main-2437	Kirkland_Manholes-597	99.4	Kirkland_Manholes-592	96.93	306.8	0.8	8	PVC	0.01	633	7	41	49	7.7	SM14-Ex-EX158	
Kirkland_Main-2438	Kirkland_Manholes-1612	97.3	Kirkland_Manholes-599	92.8	301.8	1.49	8	PVC	0.01	861	0	8	9	1	SM14-Ex-EX160	
Kirkland_Main-2440	Kirkland_Manholes-573	132.21	Kirkland_Manholes-572	113.73	388	4.76	8	PVC	0.01	1,539	3	8	12	0.8	SM14-Ex-EX118	
Kirkland_Main-2441	Kirkland_Manholes-572	113.73	Kirkland_Manholes-596	110.91	307.7	0.92	8	PVC	0.01	675	85	338	422	62.6	SM14-Ex-EX117	
Kirkland_Main-2442	Kirkland_Manholes-595	103.44	Kirkland_Manholes-597	99.4	155.7	2.6	8	PVC	0.01	1,136	6	33	39	3.4	SM14-Ex-EX116	
Kirkland_Main-2443	Kirkland_Manholes-576	111.2	Kirkland_Manholes-593	103.61	155.5	4.88	8	PVC	0.01	1,558	54	288	342	22	SM5	
Kirkland_Main-2444	Kirkland_Manholes-593	103.61	Kirkland_Manholes-592	96.93	157.1	4.25	8	PVC	0.01	1,454	55	296	351	24.2	SM5	
Kirkland_Main-2445	Kirkland_Manholes-577	113.69	Kirkland_Manholes-576	111.2	334.4	0.74	8	PVC	0.01	608	7	25	32	5.2	SM14-Ex-EX112	
Kirkland_Main-2446	Kirkland_Manholes-578	130.09	Kirkland_Manholes-577	113.69	328.9	4.99	8	PVC	0.01	1,574	4	16	20	1.3	SM14-Ex-EX112	
Kirkland_Main-2447	Kirkland_Manholes-2065	431.1	Kirkland_Manholes-2295	415.45	308.4	5.07	8	PVC	0.01	1,588	1	4	5	0.3		
Kirkland_Main-2448	Kirkland_Manholes-579	148.3	Kirkland_Manholes-578	130.09	329.4	5.53	8	PVC	0.01	1,658	2	8	10	0.6	SM14-Ex-EX112	
Kirkland_Main-2449	Kirkland_Manholes-584	159.38	Kirkland_Manholes-580	147.12	165.2	7.42	8	PVC	0.01	1,921	26	99	125	6.5	SM14-Ex-EX96	
Kirkland_Main-2450	Kirkland_Manholes-615	97.62	Kirkland_Manholes-614	87.89	329.8	2.95	8	PVC	0.01	1,211	1	8	9	0.8	SM14-Ex-EX149	
Kirkland_Main-2451	Kirkland_Manholes-604	92.41	Kirkland_Manholes-621	70.36	291.4	7.57	8	PVC	0.01	1,940	10	21	31	1.6	SM14-Ex-EX161	
Kirkland_Main-2452	Kirkland_Manholes-626	276.72	Kirkland_Manholes-627	275.98	244.8	0.3	8	PVC	0.01	388	1	4	5	1.3		
Kirkland_Main-2453	Kirkland_Manholes-628	242.79	Kirkland_Manholes-629	242.12	61.5	1.09	8	PVC	0.01	736	29	139	168	22.8		
Kirkland_Main-2454	Kirkland_Manholes-629	242.12	Kirkland_Manholes-630	239.43	331.8	0.81	8	PVC	0.01	635	30	143	173	27.2		
Kirkland_Main-2455	Kirkland_Manholes-648	244.79	Kirkland_Manholes-628	242.79	365.8	0.55	8	PVC	0.01	521	28	135	163	31.2		
Kirkland_Main-2456	Kirkland_Manholes-631	237.5	Kirkland_Manholes-632	237.32	36.6	0.5	8	PVC	0.01	498	30	151	181	36.3		Updated Per As-Builts (Drop Connection)
Kirkland_Main-2457	Kirkland_Manholes-630	239.43	Kirkland_Manholes-631	237.5	158.9	1.21	8	PVC	0.01	777	30	147	177	22.7		
Kirkland_Main-2458	Kirkland_Manholes-633	234.78	Kirkland_Manholes-634	228.12	123.4	5.4	21	PVC	0.01	21,481	458	1,542	2,000	9.3		
Kirkland_Main-2459	Kirkland_Manholes-635	248.49	Kirkland_Manholes-634	228.12	181.8	11.21	8	PVC	0.01	2,360	1	4	5	0.2		
Kirkland_Main-2460	Kirkland_Manholes-634	228.12	Kirkland_Manholes-632	228	216.6	0.06	24	PVC	0.01	3,107	460	1,550	2,009	64.7	SM14-Ex-EX75	
Kirkland_Main-2461	Kirkland_Manholes-632	228	Kirkland_Manholes-636	227	153.6	0.65	21	PVC	0.01	7,460	490	1,705	2,194	29.4		
Kirkland_Main-2462	Kirkland_Manholes-636	227	Kirkland_Manholes-335	225.11	273.2	0.69	21	PVC	0.01	7,690	490	1,709	2,198	28.6		
Kirkland_Main-2466	Kirkland_Manholes-640	237.92	Kirkland_Manholes-639	237.89	31.5	0.1	18	PVC	0.01	1,891	244	1,049	1,293	68.4	SM14-2035-DF8	
Kirkland_Main-2467	Kirkland_Manholes-639	237.89	Kirkland_Manholes-638	236.51	242.7	0.57	21	PVC	0.01	6,971	451	1,530	1,981	28.4		
Kirkland_Main-2468	Kirkland_Manholes-647	246.6	Kirkland_Manholes-646	244.32	287.5	0.79	8	PVC	0.01	628	5	4	9	1.5		
Kirkland_Main-2469	Kirkland_Manholes-646	244.32	Kirkland_Manholes-645	243.42	85.6	1.05	8	PVC	0.01	723	6	8	14	1.9		
Kirkland_Main-2470	Kirkland_Manholes-644	249.23	Kirkland_Manholes-643	242.32	131.1	5.27	8	PVC	0.01	1,619	1	4	5	0.3		
Kirkland_Main-2471	Kirkland_Manholes-645	243.42	Kirkland_Manholes-643	242.32	253.7	0.43	18	PVC	0.01	4,035	239	1,029	1,268	31.4		
Kirkland_Main-2472	Kirkland_Manholes-643	242.32	Kirkland_Manholes-642	242.1	113.5	0.19	18	PVC	0.01	2,698	241	1,037	1,278	47.4		
Kirkland_Main-2473	Kirkland_Manholes-642	242.1	Kirkland_Manholes-641	241.26	301.1	0.28	18	PVC	0.01	3,237	243	1,041	1,284	39.7		
Kirkland_Main-2474	Kirkland_Manholes-641	241.26	Kirkland_Manholes-640	237.92	280	1.19	18	PVC	0.01	6,693	244	1,045	1,289	19.3		
Kirkland_Main-2475	Kirkland_Manholes-650	246.28	Kirkland_Manholes-649	244.91	253.4	0.54	8	PVC	0.01	518	22	103	125	24.2		
Kirkland_Main-2476	Kirkland_Manholes-661	245.17	Kirkland_Manholes-648	244.79	204.2	0.19	8	PVC	0.01	304	4	24	27	9		
Kirkland_Main-2477	Kirkland_Manholes-649	244.91	Kirkland_Manholes-648	244.79	14.5	0.83	8	PVC	0.01	641	24	107	131	20.4		
Kirkland_Main-2478	Kirkland_Manholes-681	256.89	Kirkland_Manholes-684	256.25	143.5	0.45	8	PVC	0.01	473	19	36	55	11.6		
Kirkland_Main-2479	Kirkland_Manholes-683	268.99	Kirkland_Manholes-682	258.64	128.7	8.04	8	PVC	0.01	1,999	0	4	4	0.2		
Kirkland_Main-2480	Kirkland_Manholes-689	265.38	Kirkland_Manholes-688	264.8	145.1	0.4	8	PVC	0.01	445	1	4	5	1		
Kirkland_Main-2481	Kirkland_Manholes-688	264.8	Kirkland_Manholes-687	264	200.3	0.4	8	PVC	0.01	446	2	8	10	2.2		
Kirkland_Main-2482	Kirkland_Manholes-695	344.34	Kirkland_Manholes-696	340.09	297.3	1.43	8	PVC	0.01	843	4	8	12	1.5	SM14-Ex-EX74	
Kirkland_Main-2483	Kirkland_Manholes-829	344.99	Kirkland_Manholes-695	344.34	301.8	0.22	8	PVC	0.01	327	2	4	5	1.7	SM14-Ex-EX74	

Existing with Proposed Improvements - Peak Hour Flow - Pipe Capacity Table

Label	Upstream Node	Upstream Invert Elevation (ft)	Downstream Node	Downstream Invert Elevation (ft)	Length (ft)	Slope (%)	Diameter (in)	Material	Manning's n	Design Capacity (gpm)	Domestic Flow (gpm)	I/I Flow (gpm)	Total Flow (gpm)	Percent Full (%)	CIP No.	Notes
Kirkland_Main-2484	Kirkland_Manholes-694	328.94	Kirkland_Manholes-693	302.3	232.9	11.44	8	PVC	0.01	2,384	1	4	5	0.2		
Kirkland_Main-2485	Kirkland_Manholes-691	306.23	Kirkland_Manholes-693	302.3	272.1	1.44	8	PVC	0.01	847	3	8	11	1.3		
Kirkland_Main-2486	Kirkland_Manholes-692	325.47	Kirkland_Manholes-691	306.23	258.4	7.45	8	PVC	0.01	1,924	1	4	5	0.3		
Kirkland_Main-2487	Kirkland_Manholes-693	302.3	Kirkland_Manholes-807	300.8	136	1.1	8	PVC	0.01	741	6	16	22	2.9		
Kirkland_Main-2488	Kirkland_Manholes-690	274.25	Kirkland_Manholes-701	273.2	290.3	0.36	8	PVC	0.01	424	4	12	16	3.7		
Kirkland_Main-2489	Kirkland_Manholes-699	288.54	Kirkland_Manholes-701	273.2	288.8	5.31	8	PVC	0.01	1,625	3	8	11	0.7		
Kirkland_Main-2490	Kirkland_Manholes-698	313.56	Kirkland_Manholes-699	288.54	182.5	13.71	8	PVC	0.01	2,611	1	4	5	0.2		
Kirkland_Main-2492	Kirkland_Manholes-697	318.15	Kirkland_Manholes-700	302.48	274.3	5.71	8	PVC	0.01	1,685	1	4	5	0.3		
Kirkland_Main-2493	Kirkland_Manholes-700	302.48	Kirkland_Manholes-690	274.25	242.5	11.64	8	PVC	0.01	2,405	3	8	11	0.5		
Kirkland_Main-2494	Kirkland_Manholes-703	275.12	Kirkland_Manholes-704	272.37	210.2	1.31	8	PVC	0.01	806	2	4	6	0.7		
Kirkland_Main-2495	Kirkland_Manholes-702	273	Kirkland_Manholes-704	272.37	144.8	0.44	8	PVC	0.01	465	9	28	37	8		
Kirkland_Main-2496	Kirkland_Manholes-701	273.2	Kirkland_Manholes-702	273	143.3	0.14	8	PVC	0.01	263	8	24	32	12.1		
Kirkland_Main-2497	Kirkland_Manholes-723	131.03	O-42	125.22	186.8	3.11	8	PVC	0.01	1,244	55	118	173	13.9	SM14-2021-DF2	
Kirkland_Main-2498	Kirkland_Manholes-722	137.76	Kirkland_Manholes-723	131.03	91.1	7.39	8	PVC	0.01	1,917	54	112	167	8.7	SM14-2021-DF2	
Kirkland_Main-2499	Kirkland_Manholes-721	142.27	Kirkland_Manholes-722	137.76	93.1	4.84	8	PVC	0.01	1,551	52	107	159	10.2	SM14-2021-DF2	
Kirkland_Main-2500	Kirkland_Manholes-720	147.09	Kirkland_Manholes-721	142.27	318.3	1.51	8	PVC	0.01	868	52	101	153	17.7	SM14-2021-DF2	
Kirkland_Main-2501	Kirkland_Manholes-719	148.45	Kirkland_Manholes-720	147.09	142.4	0.95	8	PVC	0.01	689	52	95	148	21.4	SM14-2021-DF2	
Kirkland_Main-2502	Kirkland_Manholes-717	151.36	Kirkland_Manholes-718	150.12	225.4	0.55	8	PVC	0.01	523	50	73	123	23.4	SM14-2035-DF5	
Kirkland_Main-2503	Kirkland_Manholes-716	152.58	Kirkland_Manholes-717	151.36	272.7	0.45	8	PVC	0.01	472	50	67	117	24.8	SM14-2035-DF5	
Kirkland_Main-2504	Kirkland_Manholes-725	154.45	Kirkland_Manholes-716	152.58	174.3	1.07	8	PVC	0.01	730	42	45	87	11.9		
Kirkland_Main-2505	Kirkland_Manholes-726	155.56	Kirkland_Manholes-725	154.45	157.9	0.7	8	PVC	0.01	591	42	39	81	13.8		
Kirkland_Main-2506	Kirkland_Manholes-713	156.49	Kirkland_Manholes-726	155.56	219	0.43	8	PVC	0.01	460	27	34	61	13.2		
Kirkland_Main-2507	Kirkland_Manholes-712	157.06	Kirkland_Manholes-713	156.49	30.1	1.89	8	PVC	0.01	971	27	28	55	5.7		
Kirkland_Main-2508	Kirkland_Manholes-714	170.75	Kirkland_Manholes-712	157.06	209.3	6.54	8	PVC	0.01	1,803	0	11	11	0.6		
Kirkland_Main-2509	Kirkland_Manholes-715	181.7	Kirkland_Manholes-714	170.75	155	7.07	8	PVC	0.01	1,874	0	6	6	0.3		
Kirkland_Main-2510	Kirkland_Manholes-1398	27.8	Kirkland_Manholes-1397	27.53	119.5	0.23	30	PVC	0.01	11,376	138	1,013	2,804	24.6	SM14-Ex-EX154	
Kirkland_Main-2511	Kirkland_Manholes-1397	27.53	Kirkland_Manholes-1396	27.46	145.3	0.05	30	PVC	0.01	5,139	138	1,021	2,812	54.7	SM14-Ex-EX154	
Kirkland_Main-2512	Kirkland_Manholes-1399	44.47	Kirkland_Manholes-1398	27.8	324.1	5.14	12	PVC	0.01	4,715	135	1,004	1,490	31.6	SM14-Ex-EX143	
Kirkland_Main-2513	Kirkland_Manholes-1400	61.37	Kirkland_Manholes-1399	44.47	267.9	6.31	12	PVC	0.01	5,221	133	996	1,480	28.3	SM14-Ex-EX143	
Kirkland_Main-2514	Kirkland_Manholes-1401	76.78	Kirkland_Manholes-1400	61.37	289.6	5.32	8		0.012	1,355	30	280	310	22.9		
Kirkland_Main-2515	Kirkland_Manholes-1402	82.36	Kirkland_Manholes-1401	76.78	122	4.57	8		0.012	1,257	29	263	292	23.3		
Kirkland_Main-2516	Kirkland_Manholes-711	219.85	Kirkland_Manholes-710	219.11	65.7	1.13	8	PVC	0.01	748	9	8	17	2.3		
Kirkland_Main-2517	Kirkland_Manholes-710	219.11	Kirkland_Manholes-709	218.2	118.5	0.77	8	PVC	0.01	618	9	12	21	3.4		
Kirkland_Main-2518	Kirkland_Manholes-709	218.2	Kirkland_Manholes-707	216.1	262.1	0.8	8	PVC	0.01	631	9	16	25	3.9		
Kirkland_Main-2519	Kirkland_Manholes-708	217.66	Kirkland_Manholes-707	216.1	74	2.11	8	PVC	0.01	1,024	0	4	4	0.4		
Kirkland_Main-2520	Kirkland_Manholes-707	216.1	Kirkland_Manholes-706	215.57	102.1	0.52	8	PVC	0.01	508	9	24	33	6.4		
Kirkland_Main-2521	Kirkland_Manholes-706	215.57	Kirkland_Manholes-369	208.86	103.2	6.5	8	PVC	0.01	1,798	9	28	37	2		
Kirkland_Main-2522	Kirkland_Manholes-1403	89.74	Kirkland_Manholes-1402	82.36	156.6	4.71	8		0.012	1,276	22	239	261	20.5		
Kirkland_Main-2523	Kirkland_Manholes-1805	101.51	Kirkland_Manholes-1403	89.74	269.7	4.36	8		0.012	1,227	21	222	243	19.8		
Kirkland_Main-2524	Kirkland_Manholes-1404	117.83	Kirkland_Manholes-1805	101.51	279.3	5.84	8		0.012	1,420	5	91	95	6.7		
Kirkland_Main-2525	Kirkland_Manholes-1405	132.7	Kirkland_Manholes-1404	117.83	317.4	4.68	8		0.012	1,272	5	82	87	6.8		
Kirkland_Main-2526	Kirkland_Manholes-1396	27.46	Kirkland_Manholes-1395	27.24	179.5	0.12	30	PVC	0.01	8,435	225	1,348	3,226	38.2	SM14-Ex-EX154	
Kirkland_Main-2527	Kirkland_Manholes-1395	27.24	Kirkland_Manholes-739	26.87	399	0.09	30	PVC	0.01	7,287	226	1,356	3,236	44.4	SM14-Ex-EX154	
Kirkland_Main-2528	Kirkland_Manholes-739	26.87	Kirkland_Manholes-738	25.89	300.8	0.33	24	PVC	0.01	7,534	226	1,365	3,244	43.1		
Kirkland_Main-2532	Kirkland_Manholes-738	25.89	MH 05-714	25.01	257	0.34	24	PVC	0.01	7,724	246	1,414	3,313	42.9		Updated per as-built drawings
Kirkland_Main-2533	Kirkland_Manholes-736	28.45	Kirkland_Manholes-735	25.17	30.7	10.68	8	PVC	0.01	2,304	60	280	340	14.8		
Kirkland_Main-2534	Kirkland_Manholes-735	25.17	MH 05-714	25.01	98.1	0.16	24	PVC	0.01	5,330	550	2,050	2,600	48.8		Updated per as-built drawings
Kirkland_Main-2535	Kirkland_Manholes-1705	33.28	Kirkland_Manholes-757	27.8	142.4	3.85	8	PVC	0.01	1,383	15	33	48	3.5		
Kirkland_Main-2536	Kirkland_Manholes-757	27.8	Kirkland_Manholes-738	25.89	24.1	7.91	8	PVC	0.01	1,983	20	41	61	3.1		
Kirkland_Main-2537	Kirkland_Manholes-734	25.7	Kirkland_Manholes-735	25.17	249.9	0.21	24	PVC	0.01	6,079	490	1,762	2,252	37		
Kirkland_Main-2538	Kirkland_Manholes-732	47.45	Kirkland_Manholes-733	35.72	350.8	3.34	18	PVC	0.01	11,207	375	1,527	1,902	17		
Kirkland_Main-2539	Kirkland_Manholes-731	53.54	Kirkland_Manholes-732	47.45	265.7	2.29	18	PVC	0.01	9,278	375	1,519	1,894	20.4		
Kirkland_Main-2540	Kirkland_Manholes-729	64.46	Kirkland_Manholes-730	57.26	336.6	2.14	12	PVC	0.01	3,040	118	494	612	20.1		
Kirkland_Main-2541	Kirkland_Manholes-730	57.26	Kirkland_Manholes-731	53.54	101.9	3.65	18	PVC	0.01	11,709	287	1,054	1,341	11.4		
Kirkland_Main-2542	Kirkland_Manholes-1436	518.03	Kirkland_Manholes-1430	516.64	170	0.82	8	PVC	0.01	638	2	8	10	1.5		
Kirkland_Main-2543	Kirkland_Manholes-1434	511.6	Kirkland_Manholes-1431	510.8	175	0.46	8	PVC	0.01	477	8	32	40	8.4		
Kirkland_Main-2544	Kirkland_Manholes-1431	510.8	Kirkland_Manholes-1432	510.04	163.2	0.47	8	PVC	0.01	481	8	36	44	9.1		
Kirkland_Main-2545	Kirkland_Manholes-1432	510.04	Kirkland_Manholes-1433	509.55	97.9	0.5	8	PVC	0.01	499	9	40	49	9.8		
Kirkland_Main-2546	Kirkland_Manholes-1433	509.55	Kirkland_Manholes-1437	508.69	186	0.46	8	PVC	0.01	480	10	44	54	11.2		
Kirkland_Main-2547	Kirkland_Manholes-1435	519.8	Kirkland_Manholes-1436	518.03	159.8	1.11	8	PVC	0.01	742	2	4	6	0.8		
Kirkland_Main-2548	Kirkland_Manholes-1437	508.69	Kirkland_Manholes-1438	507.49	258.4	0.46	8	PVC	0.01	480	11	48	58	12.2		
Kirkland_Main-2549	Kirkland_Manholes-1438	507.49	Kirkland_Manholes-1444	505.53	236.5	0.83	8	PVC	0.01	642	15	72	87	13.5	SM14-Ex-EX269	

Existing with Proposed Improvements - Peak Hour Flow - Pipe Capacity Table

Label	Upstream Node	Upstream Invert Elevation (ft)	Downstream Node	Downstream Invert Elevation (ft)	Length (ft)	Slope (%)	Diameter (in)	Material	Manning's n	Design Capacity (gpm)	Domestic Flow (gpm)	I/I Flow (gpm)	Total Flow (gpm)	Percent Full (%)	CIP No.	Notes
Kirkland_Main-2550	Kirkland_Manholes-1439	508.99	Kirkland_Manholes-1438	507.49	261.3	0.57	8	PVC	0.01	534	5	20	25	4.6	SM14-Ex-EX269	
Kirkland_Main-2551	Kirkland_Manholes-1441	509.69	Kirkland_Manholes-1440	509.16	212.6	0.25	8	PVC	0.01	352	4	12	16	4.7	SM14-Ex-EX269	
Kirkland_Main-2552	Kirkland_Manholes-1440	509.16	Kirkland_Manholes-1439	508.99	378	0.04	8	PVC	0.01	150	4	16	20	13.6	SM14-Ex-EX269	
Kirkland_Main-2554	Kirkland_Manholes-1449	498.19	Kirkland_Manholes-1450	496.32	291.2	0.64	8	PVC	0.01	565	22	127	149	26.4	SM14-Ex-EX269	
Kirkland_Main-2555	Kirkland_Manholes-1450	496.32	Kirkland_Manholes-1451	492.05	400.8	1.07	8	PVC	0.01	728	25	131	156	21.4	SM14-Ex-EX269	
Kirkland_Main-2556	Kirkland_Manholes-1448	502.55	Kirkland_Manholes-1449	498.19	186.7	2.34	8	PVC	0.01	1,078	21	123	144	13.4	SM14-Ex-EX269	
Kirkland_Main-2557	Kirkland_Manholes-1447	503.26	Kirkland_Manholes-1448	502.55	401.7	0.18	8	PVC	0.01	296	19	119	138	46.7	SM14-Ex-EX269	
Kirkland_Main-2558	Kirkland_Manholes-2976	503.85	Kirkland_Manholes-1447	503.26	210.4	0.28	8	PVC	0.01	373	18	115	134	35.8	SM14-Ex-EX269	
Kirkland_Main-2559	Kirkland_Manholes-1444	505.53	Kirkland_Manholes-1446	505.51	95.2	0.02	12	PVC	0.01	301	16	83	99	32.9	SM14-Ex-EX269	
Kirkland_Main-2560	Kirkland_Manholes-1446	505.51	Kirkland_Manholes-1445	504.92	12.7	4.66	8	PVC	0.01	1,523	16	87	103	6.8	SM14-Ex-EX269	
Kirkland_Main-2561	Kirkland_Manholes-1442	510.02	Kirkland_Manholes-1443	506.8	138.1	2.33	8	PVC	0.01	1,077	0	4	4	0.4	SM14-Ex-EX274	
Kirkland_Main-2562	Kirkland_Manholes-1443	506.8	Kirkland_Manholes-1444	505.53	203.3	0.62	8	PVC	0.01	557	0	8	8	1.4	SM14-Ex-EX274	
Kirkland_Main-2563	Kirkland_Manholes-1451	492.05	Kirkland_Manholes-1452	486.6	321.3	1.7	8	PVC	0.01	918	27	135	162	17.6	SM14-Ex-EX269	
Kirkland_Main-2564	Kirkland_Manholes-1452	486.6	Kirkland_Manholes-1459	479.42	322.1	2.23	8	PVC	0.01	1,053	28	139	167	15.9	SM14-Ex-EX269	
Kirkland_Main-2565	Kirkland_Manholes-1453	500.71	Kirkland_Manholes-1454	499.21	284.8	0.53	8	PVC	0.01	512	1	4	5	1	SM14-Ex-EX270	
Kirkland_Main-2566	Kirkland_Manholes-1454	499.21	Kirkland_Manholes-1455	496	348.8	0.92	8	PVC	0.01	676	3	8	11	1.6	SM14-Ex-EX270	
Kirkland_Main-2567	Kirkland_Manholes-1455	496	Kirkland_Manholes-1456	494.83	99.7	1.17	8	PVC	0.01	764	5	12	17	2.2	SM14-Ex-EX270	
Kirkland_Main-2568	Kirkland_Manholes-1456	494.83	Kirkland_Manholes-1457	481.56	320	4.15	8	PVC	0.01	1,436	6	16	22	1.5	SM14-Ex-EX270	
Kirkland_Main-2569	Kirkland_Manholes-1461	483.24	Kirkland_Manholes-1457	482.02	293.4	0.42	8	PVC	0.01	455	17	48	64	14.1	SM14-Ex-EX214	Drop Connection
Kirkland_Main-2570	Kirkland_Manholes-1457	481.56	Kirkland_Manholes-1458	481.15	103.4	0.4	8	PVC	0.01	444	23	68	91	20.4	SM14-Ex-EX214	
Kirkland_Main-2571	Kirkland_Manholes-1458	481.15	Kirkland_Manholes-1459	479.42	259.2	0.67	8	PVC	0.01	576	23	72	95	16.4	SM14-Ex-EX214	
Kirkland_Main-2572	Kirkland_Manholes-1459	479.42	Kirkland_Manholes-1480	465.84	411.8	3.3	8	PVC	0.01	1,280	51	215	266	20.8	SM14-Ex-EX214	
Kirkland_Main-2573	Kirkland_Manholes-1460	490.4	Kirkland_Manholes-1461	483.24	392	1.83	8	PVC	0.01	953	2	4	6	0.7	SM14-Ex-EX214	
Kirkland_Main-2574	Kirkland_Manholes-1469	490.09	Kirkland_Manholes-1461	483.24	144.8	4.73	8	PVC	0.01	1,534	14	36	50	3.3	SM14-Ex-EX271	
Kirkland_Main-2575	Kirkland_Manholes-608	134.68	Kirkland_Manholes-607	127.97	148.5	4.52	8	PVC	0.01	1,499	1	8	9	0.6	SM14-Ex-EX147	
Kirkland_Main-2576	Kirkland_Manholes-607	127.97	Kirkland_Manholes-606	111.69	332.5	4.9	8	PVC	0.01	1,560	4	16	20	1.3	SM14-Ex-EX147	
Kirkland_Main-2578	Kirkland_Manholes-3035	266.43	Kirkland_Manholes-1506	266.15	125.7	0.22	8	PVC	0.01	333	27	107	134	40.3		
Kirkland_Main-2579	Kirkland_Manholes-1504	267.51	Kirkland_Manholes-1505	267	104.1	0.49	8	PVC	0.01	493	22	83	105	21.3		
Kirkland_Main-2580	Kirkland_Manholes-1503	273.94	Kirkland_Manholes-1504	267.51	44	14.62	8	PVC	0.01	2,696	1	8	9	0.3		
Kirkland_Main-2581	Kirkland_Manholes-1502	279.47	Kirkland_Manholes-1503	273.94	90.7	6.09	8	PVC	0.01	1,741	0	4	4	0.3		
Kirkland_Main-2582	Kirkland_Manholes-1501	267.93	Kirkland_Manholes-1504	267.51	165.4	0.25	8	PVC	0.01	355	20	72	92	25.8		
Kirkland_Main-2583	Kirkland_Manholes-2255	245.88	Kirkland_Manholes-2253	239.74	232.2	2.64	8	PVC	0.01	1,146	29	4	33	2.9	SM14-Ex-EX247	
Kirkland_Main-2584	Kirkland_Manholes-1499	268.92	Kirkland_Manholes-1501	267.93	240	0.41	8	PVC	0.01	453	19	68	87	19.1		
Kirkland_Main-2585	Kirkland_Manholes-1500	287.29	Kirkland_Manholes-1498	284.32	146.8	2.02	8	PVC	0.01	1,003	0	4	4	0.4		
Kirkland_Main-2587	Kirkland_Manholes-1498	284.32	Kirkland_Manholes-1499	268.92	127.3	12.1	8	PVC	0.01	2,452	2	8	9	0.4		
Kirkland_Main-2588	Kirkland_Manholes-771	213.99	Kirkland_Manholes-777	184.25	152.4	19.51	8	PVC	0.01	3,115	2	8	10	0.3		
Kirkland_Main-2589	Kirkland_Manholes-777	184.25	KC_Manholes-6	163.9	254	8.01	8	PVC	0.01	1,995	5	12	17	0.8		
Kirkland_Main-2590	KC_Manholes-5	169.15	KC_Manholes-6	163.9	285.7	1.84	8	PVC	0.01	956	9	44	53	5.5		
Kirkland_Main-2591	KC_Manholes-6	163.9	O-17	159.86	90.8	4.45	8	PVC	0.01	1,487	15	60	74	5		
Kirkland_Main-2592	Kirkland_Manholes-766	182.72	Kirkland_Manholes-1555	164.48	325.6	5.6	8	PVC	0.01	1,669	2	8	10	0.6		
Kirkland_Main-2593	Kirkland_Manholes-1555	164.48	O-18	159.86	33.3	13.89	8	PVC	0.01	2,628	4	12	15	0.6		
Kirkland_Main-2594	Kirkland_Manholes-767	210.01	Kirkland_Manholes-766	182.72	125.5	21.75	8	PVC	0.01	3,288	1	4	4	0.1		
Kirkland_Main-2595	Kirkland_Manholes-765	257.59	Kirkland_Manholes-764	244.77	266.3	4.81	8	PVC	0.01	1,547	20	72	91	5.9	SM14-Ex-EX121	
Kirkland_Main-2596	Kirkland_Manholes-764	244.77	Kirkland_Manholes-1530	229.92	292.5	5.08	8	PVC	0.01	1,589	21	75	97	6.1	SM14-Ex-EX121	
Kirkland_Main-2597	Kirkland_Manholes-770	166.93	Kirkland_Manholes-769	165.1	146.5	1.25	8	PVC	0.01	788	1	8	9	1.1		
Kirkland_Main-2598	Kirkland_Manholes-769	165.1	Kirkland_Manholes-768	159.83	42.8	12.31	8	PVC	0.01	2,474	3	16	19	0.8		
Kirkland_Main-2599	Kirkland_Manholes-768	159.83	O-19	156.57	65.3	5	8	PVC	0.01	1,577	3	20	23	1.5		
Kirkland_Main-2600	Kirkland_Manholes-1600	216.22	Kirkland_Manholes-1599	200.11	155.5	10.36	8	PVC	0.01	2,269	2	4	6	0.2	SM14-Ex-EX170	
Kirkland_Main-2601	Kirkland_Manholes-1614	91.09	Kirkland_Manholes-1613	87.49	157.9	2.28	8	PVC	0.01	1,065	12	115	127	11.9	SM14-Ex-EX167	
Kirkland_Main-2602	Kirkland_Manholes-1616	135.79	Kirkland_Manholes-1615	109.23	291.4	9.11	8	PVC	0.01	2,128	2	8	11	0.5		
Kirkland_Main-2603	Kirkland_Manholes-1617	246.15	Kirkland_Manholes-1630	217.96	377.4	7.47	8	PVC	0.01	1,927	1	4	5	0.3		
Kirkland_Main-2604	Kirkland_Manholes-1618	259.44	Kirkland_Manholes-1619	255.5	286.6	1.37	8	PVC	0.01	827	1	4	5	0.6	SM14-Ex-EX176	
Kirkland_Main-2605	Kirkland_Manholes-1619	255.5	Kirkland_Manholes-1622	253.11	371.5	0.64	8	PVC	0.01	565	3	8	11	2	SM14-Ex-EX176	
Kirkland_Main-2607	Kirkland_Manholes-1620	234.07	Kirkland_Manholes-1621	227.94	53.2	11.53	8	PVC	0.01	2,394	2	4	6	0.3		
Kirkland_Main-2608	Kirkland_Manholes-1621	227.94	Kirkland_Manholes-1631	193.59	278.6	12.33	8	PVC	0.01	2,476	3	8	11	0.4		
Kirkland_Main-2609	Kirkland_Manholes-1623	294.92	Kirkland_Manholes-1622	253.11	447.9	9.33	8	PVC	0.01	2,154	200	807	1,006	46.7	SM7	
Kirkland_Main-2610	Kirkland_Manholes-1633	254.8	Kirkland_Manholes-1622	253.11	303.2	0.56	8	PVC	0.01	526	8	16	24	4.6	SM14-Ex-EX204	
Kirkland_Main-2611	Kirkland_Manholes-1626	191.61	Kirkland_Manholes-1624	183.67	177.3	4.48	8	PVC	0.01	1,492	7	24	31	2.1		
Kirkland_Main-2615	Kirkland_Manholes-1829	64.39	Kirkland_Manholes-1830	64.02	316.5	0.12	18	PVC	0.01	2,096	102	700	1,152	55	SM14-Ex-EX142	
Kirkland_Main-2616	Kirkland_Manholes-1830	64.02	Kirkland_Manholes-1400	61.37	81.5	3.25	18	PVC	0.01	11,049	102	708	1,160	10.5	SM14-Ex-EX142	
Kirkland_Main-2617	Kirkland_Manholes-1828	65.79	Kirkland_Manholes-1829	64.39	312.6	0.45	15	PVC	0.01	2,522	101	692	1,143	45.3	SM14-2035-DF11	
Kirkland_Main-2618	Kirkland_Manholes-1827	69.3	Kirkland_Manholes-2994	67.86	357.5	0.4	15	PVC	0.01	2,392	98	659	1,107	46.3		

Existing with Proposed Improvements - Peak Hour Flow - Pipe Capacity Table

Label	Upstream Node	Upstream Invert Elevation (ft)	Downstream Node	Downstream Invert Elevation (ft)	Length (ft)	Slope (%)	Diameter (in)	Material	Manning's n	Design Capacity (gpm)	Domestic Flow (gpm)	I/I Flow (gpm)	Total Flow (gpm)	Percent Full (%)	CIP No.	Notes
Kirkland_Main-2619	Kirkland_Manholes-1826	70.81	Kirkland_Manholes-1827	69.3	214.2	0.71	15	PVC	0.01	3,165	96	650	1,097	34.7		
Kirkland_Main-2620	Kirkland_Manholes-1824	72.16	Kirkland_Manholes-1826	70.81	200.6	0.67	15	PVC	0.01	3,092	96	642	1,088	35.2		
Kirkland_Main-2621	Kirkland_Manholes-1823	74.67	Kirkland_Manholes-1824	72.16	26.9	9.32	8	PVC	0.01	2,153	7	33	40	1.9	SM10	
Kirkland_Main-2622	Kirkland_Manholes-1822	87.17	Kirkland_Manholes-1823	74.67	362.6	3.45	8	PVC	0.01	1,309	5	25	30	2.3	SM10	
Kirkland_Main-2623	Kirkland_Manholes-1821	94.43	Kirkland_Manholes-1822	87.17	350	2.07	8	PVC	0.01	1,015	4	16	20	2	SM10	
Kirkland_Main-2624	Kirkland_Manholes-1820	95.81	Kirkland_Manholes-1821	94.43	359.9	0.38	8	PVC	0.01	437	2	8	10	2.3	SM10	
Kirkland_Main-2625	Kirkland_Manholes-1819	89.53	Kirkland_Manholes-1402	82.36	241.2	2.97	8	PVC	0.01	1,216	6	16	23	1.9	SM10	
Kirkland_Main-2626	Kirkland_Manholes-1818	98.86	Kirkland_Manholes-1819	89.53	204	4.57	8	PVC	0.01	1,508	5	8	13	0.9	SM10	
Kirkland_Main-2628	Kirkland_Manholes-1811	129.72	Kirkland_Manholes-1812	126.33	178.5	1.9	8	PVC	0.01	972	12	82	94	9.7	SM10	
Kirkland_Main-2629	Kirkland_Manholes-1812	126.33	Kirkland_Manholes-1813	123.92	54.8	4.4	8	PVC	0.01	1,479	12	91	103	6.9	SM14-Ex-EX139	
Kirkland_Main-2630	Kirkland_Manholes-1813	123.92	Kirkland_Manholes-1814	117.44	111.3	5.82	8	PVC	0.01	1,701	13	99	112	6.6	SM14-Ex-EX139	
Kirkland_Main-2631	Kirkland_Manholes-1814	117.44	Kirkland_Manholes-1817	109.22	155.5	5.28	8	PVC	0.01	1,621	15	115	130	8	SM10	
Kirkland_Main-2632	Kirkland_Manholes-1815	130.16	Kirkland_Manholes-1814	117.44	475.8	2.67	8	PVC	0.01	1,153	2	8	10	0.9	SM10	
Kirkland_Main-2633	Kirkland_Manholes-1816	115.31	Kirkland_Manholes-1825	112.27	360.1	0.84	8	PVC	0.01	648	3	8	11	1.7	SM10	
Kirkland_Main-2634	Kirkland_Manholes-1817	109.22	Kirkland_Manholes-1805	101.51	328.6	2.35	8	PVC	0.01	1,080	15	123	139	12.8	SM10	
Kirkland_Main-2635	Kirkland_Manholes-1831	166.9	Kirkland_Manholes-1190	151.12	137.2	11.5	8	PVC	0.01	2,391	1	8	9	0.4	SM14-Ex-EX83	
Kirkland_Main-2636	Kirkland_Manholes-1837	12.2	Kirkland_Manholes-1836	11	9.3	12.92	12	PVC	0.01	7,473	372	786	1,157	15.5		
Kirkland_Main-2637	Kirkland_Manholes-1834	11.35	Kirkland_Manholes-1835	11.1	27.9	0.9	12	PVC	0.01	1,967	16	91	106	5.4		
Kirkland_Main-2638	Kirkland_Manholes-1835	11.1	Kirkland_Manholes-1836	11	9.8	1.02	12	PVC	0.01	2,099	16	97	113	5.4		
Kirkland_Main-2639	Kirkland_Manholes-1832	17.68	Kirkland_Manholes-1833	16.5	43.9	2.69	8	PVC	0.01	1,155	2	6	9	0.7		
Kirkland_Main-2640	Kirkland_Manholes-1794	12.63	Kirkland_Manholes-1837	12.2	128.1	0.34	15	PVC	0.01	2,183	372	779	1,151	52.7		
Kirkland_Main-2641	Kirkland_Manholes-2679	83.65	Kirkland_Manholes-2880	81.72	80.2	2.41	8	PVC	0.01	1,094	0	6	6	0.6		
Kirkland_Main-2642	Kirkland_Manholes-2880	81.72	Kirkland_Manholes-2879	68.04	76.6	17.86	8	PVC	0.01	2,979	24	30	55	1.8		
Kirkland_Main-2644	Kirkland_Manholes-2885	165.69	Kirkland_Manholes-1111	165.6	145.4	0.06	8	PVC	0.01	175	0	4	4	2.3	SM14-Ex-EX9	
Kirkland_Main-2658	Kirkland_Manholes-480	484.34	Kirkland_Manholes-1493	479.91	224.4	1.97	8	PVC	0.01	991	3	4	7	0.7		
Kirkland_Main-2659	Kirkland_Manholes-3042	194.23	Kirkland_Manholes-2474	188.45	173.4	3.33	8	PVC	0.01	1,287	1	4	5	0.4		
Kirkland_Main-2663	Kirkland_Manholes-2886	151	Kirkland_Manholes-252	142.57	290.9	2.9	8	PVC	0.01	1,200	0	4	4	0.4	SM14-Ex-EX40	
Kirkland_Main-2666	Kirkland_Manholes-2887	302.33	Kirkland_Manholes-2888	290.53	197	5.99	8	PVC	0.01	1,725	3	16	19	1.1		
Kirkland_Main-2667	Kirkland_Manholes-1181	120.04	Kirkland_Manholes-2889	83.33	400.3	9.17	8	PVC	0.01	2,135	3	9	12	0.6	SM10	
Kirkland_Main-2668	Kirkland_Manholes-2889	83.33	Kirkland_Manholes-305	74.69	164.1	5.26	8	PVC	0.01	1,618	5	18	23	1.4	SM10	
Kirkland_Main-2670	Kirkland_Manholes-1624	183.67	Kirkland_Manholes-1625	179.1	84.9	5.38	8	PVC	0.01	1,636	7	28	35	2.1		
Kirkland_Main-2671	Kirkland_Manholes-1632	181.73	Kirkland_Manholes-1625	179.1	96.8	2.72	8	PVC	0.01	1,162	3	16	19	1.6		
Kirkland_Main-2672	Kirkland_Manholes-1627	199.21	Kirkland_Manholes-1626	191.61	142.7	5.33	8	PVC	0.01	1,627	7	20	27	1.7		
Kirkland_Main-2673	Kirkland_Manholes-1628	203.71	Kirkland_Manholes-1627	199.21	47.7	9.43	8	PVC	0.01	2,165	7	16	22	1		
Kirkland_Main-2674	Kirkland_Manholes-1629	216.45	Kirkland_Manholes-1628	203.71	87.7	14.52	8	PVC	0.01	2,687	7	12	18	0.7		
Kirkland_Main-2675	Kirkland_Manholes-1630	217.96	Kirkland_Manholes-1629	216.45	15.3	9.86	8	PVC	0.01	2,214	1	8	9	0.4		
Kirkland_Main-2676	Kirkland_Manholes-1631	193.59	Kirkland_Manholes-1632	181.73	96.1	12.34	8	PVC	0.01	2,477	3	12	15	0.6		
Kirkland_Main-2677	Kirkland_Manholes-1712	141.37	Kirkland_Manholes-1706	124.78	325.1	5.1	8	PVC	0.01	1,593	1	8	10	0.6	SM14-Ex-EX166	
Kirkland_Main-2678	Kirkland_Manholes-1716	100.64	Kirkland_Manholes-1715	96.61	119	3.39	8	PVC	0.01	1,298	15	8	23	1.8		
Kirkland_Main-2679	Kirkland_Manholes-1715	96.61	Kirkland_Manholes-1714	94.78	31.8	5.76	8	PVC	0.01	1,692	15	16	31	1.9		
Kirkland_Main-2680	Kirkland_Manholes-1713	108.19	Kirkland_Manholes-1714	94.78	126.8	10.57	8	PVC	0.01	2,293	9	8	17	0.7	SM14-Ex-EX186	
Kirkland_Main-2681	Kirkland_Manholes-1714	94.78	Kirkland_Manholes-1717	58.55	387.3	9.35	8	PVC	0.01	2,156	24	33	56	2.6	SM14-Ex-EX186	
Kirkland_Main-2685	Kirkland_Manholes-1720	51.16	Kirkland_Manholes-1722	47.26	30.1	12.97	8	PVC	0.01	2,539	39	25	63	2.5		
Kirkland_Main-2686	Kirkland_Manholes-1721	54.75	Kirkland_Manholes-1720	51.16	58.7	6.12	8	PVC	0.01	1,744	39	16	55	3.2	SM14-Ex-EX185	
Kirkland_Main-2687	Kirkland_Manholes-1723	62.26	Kirkland_Manholes-1721	54.75	207.5	3.62	8	PVC	0.01	1,341	36	8	45	3.3	SM14-Ex-EX185	
Kirkland_Main-2688	Kirkland_Manholes-1711	136.47	Kirkland_Manholes-1710	134.24	160.1	1.39	12	PVC	0.01	2,453	11	74	85	3.5	SM14-Ex-EX196	
Kirkland_Main-2689	Kirkland_Manholes-1734	24.57	Kirkland_Manholes-1737	24.2	117	0.32	12	PVC	0.01	1,169	92	132	224	19.1		
Kirkland_Main-2690	Kirkland_Manholes-1735	26.22	Kirkland_Manholes-1734	24.57	115.4	1.43	12	PVC	0.01	2,488	5	25	30	1.2		
Kirkland_Main-2691	Kirkland_Manholes-1729	25.06	Kirkland_Manholes-1734	24.57	158.2	0.31	12	PVC	0.01	1,157	87	99	185	16		
Kirkland_Main-2692	Kirkland_Manholes-1730	26.2	Kirkland_Manholes-1729	25.06	35.3	3.23	8	PVC	0.01	1,268	17	33	50	4		
Kirkland_Main-2693	Kirkland_Manholes-1731	27.35	Kirkland_Manholes-1730	26.2	207.2	0.55	8	PVC	0.01	525	13	25	38	7.3		
Kirkland_Main-2694	Kirkland_Manholes-1732	28.2	Kirkland_Manholes-1731	27.35	54.4	1.56	8	PVC	0.01	882	6	16	23	2.6	SM14-Ex-EX156	
Kirkland_Main-2695	Kirkland_Manholes-1733	28.74	Kirkland_Manholes-1732	28.2	66.1	0.82	8	PVC	0.01	637	6	8	14	2.3	SM14-Ex-EX156	
Kirkland_Main-2696	Kirkland_Manholes-1743	28.04	Kirkland_Manholes-1746	27.54	238.6	0.21	15	PVC	0.01	1,725	247	568	816	47.3	SM14-Ex-EX157	
Kirkland_Main-2697	Kirkland_Manholes-1746	27.54	MH_Selection_06-13-2016-4	25.37	27.6	7.87	15	PVC	0.01	10,571	249	617	866	8.2	SM14-Ex-EX157	Updated per as-built drawings
Kirkland_Main-2700	Kirkland_Manholes-1745	27.57	Kirkland_Manholes-1746	27.54	73.9	0.04	8	PVC	0.01	142	1	41	43	29.9		
Kirkland_Main-2702	Kirkland_Manholes-1737	24.2	MH_Selection_06-13-2016-5	24.55	145.6	-0.24	12	PVC	0.01	1,019	101	140	241	23.7		Updated per as-built drawings
Kirkland_Main-2703	Kirkland_Manholes-1736	26.69	Kirkland_Manholes-1735	26.22	88.6	0.53	8	PVC	0.01	513	5	16	22	4.2		
Kirkland_Main-2704	Kirkland_Manholes-1752	27.81	Kirkland_Manholes-1736	26.69	254.8	0.44	8	PVC	0.01	467	4	8	12	2.6		
Kirkland_Main-2705	Kirkland_Manholes-1765	114.35	Kirkland_Manholes-1764	112.57	108.8	1.64	8	PVC	0.01	902	2	8	10	1.1		
Kirkland_Main-2706	Kirkland_Manholes-1764	112.57	Kirkland_Manholes-1763	111.41	74.1	1.57	8	PVC	0.01	882	7	16	23	2.6		
Kirkland_Main-2707	Kirkland_Manholes-1763	111.41	Kirkland_Manholes-1761	99.41	212.2	5.65	10	PVC	0.01	3,040	12	58	70	2.3		

Existing with Proposed Improvements - Peak Hour Flow - Pipe Capacity Table

Label	Upstream Node	Upstream Invert Elevation (ft)	Downstream Node	Downstream Invert Elevation (ft)	Length (ft)	Slope (%)	Diameter (in)	Material	Manning's n	Design Capacity (gpm)	Domestic Flow (gpm)	I/I Flow (gpm)	Total Flow (gpm)	Percent Full (%)	CIP No.	Notes
Kirkland_Main-2708	Kirkland_Manholes-1761	99.41	Kirkland_Manholes-1762	98.88	52.5	1.01	12	PVC	0.01	2,089	29	198	227	10.8	SM14-Ex-EX166	
Kirkland_Main-2709	Kirkland_Manholes-1706	124.78	Kirkland_Manholes-1761	99.41	406.8	6.24	12	PVC	0.01	5,191	17	132	149	2.9	SM14-Ex-EX166	
Kirkland_Main-2710	Kirkland_Manholes-1766	113.7	Kirkland_Manholes-1763	111.41	43.4	5.28	8	PVC	0.01	1,620	5	33	38	2.3	SM14-Ex-EX168	
Kirkland_Main-2711	Kirkland_Manholes-1767	122.16	Kirkland_Manholes-1766	113.7	181	4.67	8	PVC	0.01	1,524	5	25	30	2	SM14-Ex-EX168	
Kirkland_Main-2712	Kirkland_Manholes-1674	78.95	Kirkland_Manholes-1774	71.66	398	1.83	8	PVC	0.01	954	65	206	270	28.3		
Kirkland_Main-2713	Kirkland_Manholes-1774	71.66	Kirkland_Manholes-1773	69.68	129.9	1.52	8	PVC	0.01	871	66	214	280	32.2		
Kirkland_Main-2714	Kirkland_Manholes-1773	69.68	Kirkland_Manholes-1772	68.31	220	0.62	8	PVC	0.01	556	73	222	296	53.2		
Kirkland_Main-2715	Kirkland_Manholes-1768	72.13	Kirkland_Manholes-1772	68.31	229.6	1.66	12	PVC	0.01	2,680	45	247	292	10.9	SM14-Ex-EX166	
Kirkland_Main-2716	Kirkland_Manholes-1775	102.05	Kirkland_Manholes-1771	101.91	35.5	0.4	8	PVC	0.01	446	5	8	13	2.9		Drop Connection
Kirkland_Main-2717	Kirkland_Manholes-1771	99.82	Kirkland_Manholes-1770	99.51	78	0.4	8	PVC	0.01	446	6	16	22	5		Drop Connection
Kirkland_Main-2718	Kirkland_Manholes-1770	92.14	Kirkland_Manholes-1769	80.52	165	7.04	8	PVC	0.01	1,871	7	25	31	1.7		
Kirkland_Main-2719	Kirkland_Manholes-1769	80.52	Kirkland_Manholes-1768	72.13	44.6	18.83	8	PVC	0.01	3,059	7	33	40	1.3		
Kirkland_Main-2720	Kirkland_Manholes-1762	98.88	Kirkland_Manholes-1768	72.13	281.2	9.51	12	PVC	0.01	6,412	30	206	235	3.7	SM14-Ex-EX166	
Kirkland_Main-2721	Kirkland_Manholes-1742	45.09	Kirkland_Manholes-1740	35.99	141.8	6.42	10	PVC	0.01	3,238	177	478	654	20.2		
Kirkland_Main-2722	Kirkland_Manholes-1741	41.4	Kirkland_Manholes-1740	35.99	19.3	27.98	8	PVC	0.01	3,729	71	74	145	3.9		
Kirkland_Main-2723	Kirkland_Manholes-1722	47.26	Kirkland_Manholes-1742	45.09	91	2.38	12	PVC	0.01	3,210	177	469	646	20.1		
Kirkland_Main-2724	Kirkland_Manholes-1760	56.49	Kirkland_Manholes-1722	47.26	220.7	4.18	10	PVC	0.01	2,614	138	436	574	22		
Kirkland_Main-2725	Kirkland_Manholes-2143	61.9	Kirkland_Manholes-1760	56.49	198.1	2.73	10	PVC	0.01	2,112	124	428	552	26.1		
Kirkland_Main-2726	Kirkland_Manholes-1738	34.54	Kirkland_Manholes-1728	26.2	233.5	3.57	8	PVC	0.01	1,333	30	16	47	3.5	SM14-Ex-EX184	
Kirkland_Main-2727	Kirkland_Manholes-1739	35.68	Kirkland_Manholes-1738	34.54	39.2	2.91	8	PVC	0.01	1,202	0	8	8	0.7	SM14-Ex-EX184	
Kirkland_Main-2730	Kirkland_Manholes-1783	44.54	Kirkland_Manholes-1784	44.07	47.4	1	8	PVC	0.01	705	65	66	131	18.6		
Kirkland_Main-2731	Kirkland_Manholes-1786	41.21	Kirkland_Manholes-733	35.72	39.3	13.98	10	PVC	0.01	4,780	66	99	165	3.4		
Kirkland_Main-2732	Kirkland_Manholes-1787	42.06	Kirkland_Manholes-1786	41.21	134.7	0.63	10	PVC	0.01	1,016	66	91	157	15.4		
Kirkland_Main-2733	Kirkland_Manholes-1785	42.96	Kirkland_Manholes-1787	42.06	131.8	0.68	10	PVC	0.01	1,056	65	82	147	13.9		
Kirkland_Main-2734	Kirkland_Manholes-1920	409.24	Kirkland_Manholes-2925	409	89.7	0.27	12	PVC	0.01	1,075	90	366	455	42.3	SM14-Ex-EX215	
Kirkland_Main-2735	Kirkland_Manholes-2925	409	Kirkland_Manholes-1921	405.86	161.9	1.94	8	PVC	0.01	982	91	370	460	46.9	SM14-Ex-EX215	
Kirkland_Main-2736	Kirkland_Manholes-1784	44.07	Kirkland_Manholes-1785	42.96	150	0.74	10	PVC	0.01	1,100	65	74	139	12.7		
Kirkland_Main-2737	Kirkland_Manholes-1782	44.9	Kirkland_Manholes-1783	44.54	88.3	0.4	8	PVC	0.01	446	65	58	123	27.5		
Kirkland_Main-2738	Kirkland_Manholes-1781	45.04	Kirkland_Manholes-1782	44.9	34.7	0.4	8	PVC	0.01	446	65	49	114	25.7		
Kirkland_Main-2739	Kirkland_Manholes-1777	45.35	Kirkland_Manholes-1781	45.04	78.1	0.4	8	PVC	0.01	446	65	41	106	23.8		
Kirkland_Main-2740	Kirkland_Manholes-1779	45.97	Kirkland_Manholes-1778	45.85	28.6	0.4	8	PVC	0.01	446	5	16	21	4.8		
Kirkland_Main-2741	Kirkland_Manholes-1778	45.85	Kirkland_Manholes-1777	45.35	126.1	0.4	8	PVC	0.01	446	62	25	87	19.5		
Kirkland_Main-2742	Kirkland_Manholes-1780	57.25	Kirkland_Manholes-1779	45.97	252.4	4.47	8	PVC	0.01	1,491	5	8	13	0.9		
Kirkland_Main-2743	Kirkland_Manholes-1776	46.25	Kirkland_Manholes-1777	45.35	244.9	0.37	8	PVC	0.01	428	3	8	11	2.6		
Kirkland_Main-2745	Kirkland_Manholes-1696	58.41	Kirkland_Manholes-1695	51.29	146.7	4.85	8	PVC	0.01	1,553	50	222	273	17.6	SM14-Ex-EX96	
Kirkland_Main-2746	Kirkland_Manholes-1695	51.29	Kirkland_Manholes-1694	44.12	135.5	5.29	8	PVC	0.01	1,622	52	231	283	17.4	SM14-Ex-EX96	
Kirkland_Main-2748	Kirkland_Manholes-2107	69.19	Kirkland_Manholes-2106	63.43	225	2.56	8	PVC	0.01	1,128	1	6	8	0.7	SM14-Ex-EX227	
Kirkland_Main-2749	Kirkland_Manholes-2108	68.46	Kirkland_Manholes-2109	59.77	298.6	2.91	8	PVC	0.01	1,203	52	146	198	16.5	SM14-Ex-EX222	
Kirkland_Main-2750	Kirkland_Manholes-2119	72.3	Kirkland_Manholes-2108	68.46	400.8	0.96	8	PVC	0.01	690	42	97	139	20.2	SM14-Ex-EX222	
Kirkland_Main-2751	Kirkland_Manholes-2511	85.9	Kirkland_Manholes-2108	85.31	148.4	0.4	8	PVC	0.01	446	10	43	52	11.8	SM14-Ex-EX229	Drop Connection
Kirkland_Main-2752	Kirkland_Manholes-2109	59.77	Kirkland_Manholes-2111	59.56	305.5	0.07	12	PVC	0.01	545	55	152	207	37.9	SM14-Ex-EX222	
Kirkland_Main-2753	Kirkland_Manholes-2110	60.2	Kirkland_Manholes-2111	59.56	55.5	1.15	8	PVC	0.01	757	13	36	49	6.5	SM14-Ex-EX232	
Kirkland_Main-2754	Kirkland_Manholes-2112	88.66	Kirkland_Manholes-2110	60.2	228.7	12.44	8	PVC	0.01	2,487	12	30	43	1.7	SM14-Ex-EX232	
Kirkland_Main-2755	Kirkland_Manholes-2115	91.85	Kirkland_Manholes-2112	88.66	62.8	5.08	8	PVC	0.01	1,589	8	24	32	2	SM14-Ex-EX232	
Kirkland_Main-2756	Kirkland_Manholes-2113	121.3	Kirkland_Manholes-2115	91.85	150.4	19.59	8	PVC	0.01	3,120	4	12	17	0.5	SM14-Ex-EX232	
Kirkland_Main-2757	Kirkland_Manholes-2114	121.77	Kirkland_Manholes-2113	121.3	207.4	0.23	8	PVC	0.01	336	3	6	9	2.7		
Kirkland_Main-2758	Kirkland_Manholes-2116	91.9	Kirkland_Manholes-2115	91.85	279.7	0.02	8	PVC	0.01	94	3	6	9	9.7	SM14-Ex-EX232	
Kirkland_Main-2759	Kirkland_Manholes-2146	75.22	Kirkland_Manholes-2117	74.65	143.2	0.4	8	PVC	0.01	446	28	85	113	25.4	SM14-Ex-EX222	Drop Connection
Kirkland_Main-2760	Kirkland_Manholes-2117	73.78	Kirkland_Manholes-2119	72.3	427.2	0.35	8	PVC	0.01	415	28	91	120	28.8	SM14-Ex-EX222	
Kirkland_Main-2761	Kirkland_Manholes-2445	191.11	Kirkland_Manholes-2490	173.27	210.3	8.48	8	PVC	0.01	2,053	20	68	87	4.2	SM14-Ex-EX243	
Kirkland_Main-2763	Kirkland_Manholes-2446	217.36	Kirkland_Manholes-2444	199.73	226.7	7.78	8	PVC	0.01	1,966	3	12	15	0.8	SM14-Ex-EX245	
Kirkland_Main-2765	Kirkland_Manholes-1862	286.87	Kirkland_Manholes-1863	286.75	31.1	0.4	8	PVC	0.01	446	63	131	194	43.5		Drop Connection
Kirkland_Main-2766	Kirkland_Manholes-1863	286.33	Kirkland_Manholes-1864	285.22	36.3	3.06	8	PVC	0.01	1,233	63	135	198	16.1		
Kirkland_Main-2767	Kirkland_Manholes-1864	285.22	Kirkland_Manholes-1866	277.54	215.1	3.57	8	PVC	0.01	1,332	67	147	214	16.1		
Kirkland_Main-2768	Kirkland_Manholes-1865	285.61	Kirkland_Manholes-1864	285.22	36.3	1.07	8	PVC	0.01	731	4	8	12	1.7		
Kirkland_Main-2769	Kirkland_Manholes-2770	287.2	Kirkland_Manholes-1865	285.61	339.1	0.47	8	PVC	0.01	483	4	4	8	1.7		
Kirkland_Main-2770	Kirkland_Manholes-1871	279.1	Kirkland_Manholes-1866	277.54	120.2	1.3	8	PVC	0.01	803	3	28	31	3.8		
Kirkland_Main-2771	Kirkland_Manholes-1866	277.54	Kirkland_Manholes-1867	276.54	31.1	3.22	8	PVC	0.01	1,264	70	179	249	19.7		
Kirkland_Main-2772	Kirkland_Manholes-1867	276.54	Kirkland_Manholes-1868	257.42	267.6	7.15	8	PVC	0.01	1,885	70	183	253	13.4		
Kirkland_Main-2773	Kirkland_Manholes-1868	257.42	Kirkland_Manholes-1888	254.12	73.1	4.51	10	PVC	0.01	2,715	116	262	378	13.9		
Kirkland_Main-2774	Kirkland_Manholes-1887	260.26	Kirkland_Manholes-1868	257.42	270	1.05	8	PVC	0.01	723	45	75	120	16.6		
Kirkland_Main-2775	Kirkland_Manholes-1869	292.56	Kirkland_Manholes-1870	286.99	206.4	2.7	8	PVC	0.01	1,158	3	4	7	0.6		

Existing with Proposed Improvements - Peak Hour Flow - Pipe Capacity Table

Label	Upstream Node	Upstream Invert Elevation (ft)	Downstream Node	Downstream Invert Elevation (ft)	Length (ft)	Slope (%)	Diameter (in)	Material	Manning's n	Design Capacity (gpm)	Domestic Flow (gpm)	I/I Flow (gpm)	Total Flow (gpm)	Percent Full (%)	CIP No.	Notes
Kirkland_Main-2776	Kirkland_Manholes-1870	286.99	Kirkland_Manholes-1871	279.1	130.7	6.04	8	PVC	0.01	1,732	3	8	11	0.6		
Kirkland_Main-2777	Kirkland_Manholes-1872	282.33	Kirkland_Manholes-1871	279.1	27.4	11.77	8	PVC	0.01	2,419	0	16	16	0.7		
Kirkland_Main-2778	Kirkland_Manholes-1896	286.15	Kirkland_Manholes-1872	282.33	252.6	1.51	8	PVC	0.01	867	0	12	12	1.4		
Kirkland_Main-2779	Kirkland_Manholes-1895	288.31	Kirkland_Manholes-1896	286.15	156.7	1.38	8	PVC	0.01	828	0	8	8	1		
Kirkland_Main-2781	Kirkland_Manholes-1894	292.07	Kirkland_Manholes-1895	288.31	37.7	9.98	8	PVC	0.01	2,227	0	4	4	0.2		
Kirkland_Main-2785	Kirkland_Manholes-1893	314.62	Kirkland_Manholes-1892	301.26	174.3	7.66	8	PVC	0.01	1,952	21	32	53	2.7		
Kirkland_Main-2786	Kirkland_Manholes-1892	301.26	Kirkland_Manholes-1882	297.55	110.1	3.37	8	PVC	0.01	1,294	24	40	63	4.9		
Kirkland_Main-2787	Kirkland_Manholes-1882	297.55	Kirkland_Manholes-1885	271.65	301.6	8.59	8	PVC	0.01	2,066	29	44	73	3.5		
Kirkland_Main-2788	Kirkland_Manholes-1883	295.15	Kirkland_Manholes-1885	271.65	83.7	28.09	8	PVC	0.01	3,737	8	20	28	0.7		
Kirkland_Main-2789	Kirkland_Manholes-1889	296.4	Kirkland_Manholes-1883	295.15	155.2	0.81	8	PVC	0.01	633	8	16	24	3.8		
Kirkland_Main-2790	Kirkland_Manholes-1884	299.38	Kirkland_Manholes-1889	296.4	51.3	5.81	8	PVC	0.01	1,699	4	12	16	0.9		
Kirkland_Main-2791	Kirkland_Manholes-1891	305.89	Kirkland_Manholes-1890	303.36	105.7	2.39	8	PVC	0.01	1,091	3	4	7	0.7		
Kirkland_Main-2792	Kirkland_Manholes-1890	303.36	Kirkland_Manholes-1884	299.38	71.4	5.58	8	PVC	0.01	1,665	4	8	12	0.7		
Kirkland_Main-2793	Kirkland_Manholes-1885	271.65	Kirkland_Manholes-1886	262.12	238.5	4	8	PVC	0.01	1,409	44	68	111	7.9		
Kirkland_Main-2794	Kirkland_Manholes-1886	262.12	Kirkland_Manholes-1887	260.26	298.4	0.62	8	PVC	0.01	557	44	72	115	20.7		
Kirkland_Main-2795	Kirkland_Manholes-1888	254.12	Kirkland_Manholes-1897	245.38	209.5	4.17	8	PVC	0.01	1,440	136	310	446	31		
Kirkland_Main-2796	Kirkland_Manholes-1877	246.77	Kirkland_Manholes-1873	243.35	391.2	0.87	8	PVC	0.01	659	55	119	174	26.4		
Kirkland_Main-2797	Kirkland_Manholes-1873	243.35	Kirkland_Manholes-1874	243.32	295.9	0.01	24	PVC	0.01	1,329	191	437	629	47.3	SM14-Ex-EX134	
Kirkland_Main-2798	Kirkland_Manholes-1875	249.18	Kirkland_Manholes-1876	247.77	111.8	1.26	8	PVC	0.01	792	22	4	26	3.3		
Kirkland_Main-2799	Kirkland_Manholes-1876	247.77	Kirkland_Manholes-1877	246.77	320.2	0.31	8	PVC	0.01	394	22	16	38	9.7		
Kirkland_Main-2800	Kirkland_Manholes-1878	249.88	Kirkland_Manholes-1877	246.77	242.5	1.28	8	PVC	0.01	798	32	99	132	16.5		
Kirkland_Main-2801	Kirkland_Manholes-1874	243.32	Kirkland_Manholes-1571	242.76	271.1	0.21	15	PVC	0.01	1,713	191	441	632	36.9		
Kirkland_Main-2802	Kirkland_Manholes-1881	267.11	Kirkland_Manholes-1879	258.08	239.4	3.77	8	PVC	0.01	1,369	30	87	117	8.6		
Kirkland_Main-2803	Kirkland_Manholes-1880	260.03	Kirkland_Manholes-1879	258.08	143.3	1.36	8	PVC	0.01	822	2	4	6	0.7		
Kirkland_Main-2805	Kirkland_Manholes-1879	258.08	Kirkland_Manholes-1878	249.88	231.7	3.54	8	PVC	0.01	1,326	32	95	128	9.6		
Kirkland_Main-2806	Kirkland_Manholes-1897	245.38	Kirkland_Manholes-1873	243.35	282.6	0.72	10	PVC	0.01	1,084	136	314	450	41.6		
Kirkland_Main-2807	Kirkland_Manholes-1902	406.33	Kirkland_Manholes-1899	405.32	253.1	0.4	8	PVC	0.01	447	1	4	5	1.1		
Kirkland_Main-2808	Kirkland_Manholes-1899	405.32	Kirkland_Manholes-1898	404.75	141.4	0.4	8	PVC	0.01	446	2	8	9	2.1		
Kirkland_Main-2809	Kirkland_Manholes-1898	404.75	Kirkland_Manholes-1900	402.51	135.8	1.65	8	PVC	0.01	905	3	12	15	1.6		
Kirkland_Main-2810	Kirkland_Manholes-1900	402.51	Kirkland_Manholes-1901	396.95	219.6	2.53	8	PVC	0.01	1,122	4	16	20	1.8		
Kirkland_Main-2811	Kirkland_Manholes-1901	396.95	Kirkland_Manholes-1905	395.5	142.8	1.02	8	PVC	0.01	711	5	20	25	3.5		
Kirkland_Main-2812	Kirkland_Manholes-1903	399.77	Kirkland_Manholes-1904	399.67	107.5	0.09	8	PVC	0.01	215	3	12	15	7.1		
Kirkland_Main-2813	Kirkland_Manholes-1904	399.67	Kirkland_Manholes-1905	395.5	126.3	3.3	8	PVC	0.01	1,281	4	16	20	1.6		
Kirkland_Main-2814	Kirkland_Manholes-2220	93.99	Kirkland_Manholes-2219	92.24	194.8	0.9	8	PVC	0.01	668	1	6	7	1.1		
Kirkland_Main-2815	Kirkland_Manholes-2219	92.24	Kirkland_Manholes-2218	82.71	300.9	3.17	8	PVC	0.01	1,255	3	13	16	1.3		
Kirkland_Main-2824	Kirkland_Manholes-2222	72.19	Kirkland_Manholes-2221	60.29	232.5	5.12	8	PVC	0.01	1,595	3	19	23	1.4		
Kirkland_Main-2825	Kirkland_Manholes-2223	75.05	Kirkland_Manholes-2222	72.19	181.6	1.58	8	PVC	0.01	885	2	13	15	1.6		
Kirkland_Main-2826	Kirkland_Manholes-2224	76.4	Kirkland_Manholes-2223	75.05	210.4	0.64	8	PVC	0.01	565	1	6	7	1.3		
Kirkland_Main-2829	Kirkland_Manholes-2233	60.15	Kirkland_Manholes-2232	48.59	76.7	15.07	8	PVC	0.01	2,737	14	6	21	0.8		
Kirkland_Main-2830	Kirkland_Manholes-2232	48.59	Kirkland_Manholes-2231	25.71	219.7	10.42	8	PVC	0.01	2,275	15	13	28	1.2		
Kirkland_Main-2831	Kirkland_Manholes-2231	25.71	Kirkland_Manholes-2230	23.3	56.5	4.26	8	PVC	0.01	1,456	15	19	34	2.4		
Kirkland_Main-2832	Kirkland_Manholes-2230	23.3	Kirkland_Manholes-2229	22.53	34.1	2.26	8	PVC	0.01	1,060	15	32	47	4.5		
Kirkland_Main-2833	Kirkland_Manholes-2210	47.75	Kirkland_Manholes-2205	23.1	33.9	72.62	8	PVC	0.01	6,008	6	26	32	0.5	SM14-Ex-EX189	Slope verified in as-builts
Kirkland_Main-2834	Kirkland_Manholes-2211	51.73	Kirkland_Manholes-2210	47.75	86.6	4.6	8	PVC	0.01	1,512	6	19	26	1.7		
Kirkland_Main-2835	Kirkland_Manholes-2207	54.13	Kirkland_Manholes-2211	51.73	163.6	1.47	8	PVC	0.01	854	0	13	13	1.6		
Kirkland_Main-2836	Kirkland_Manholes-2206	66.42	Kirkland_Manholes-2198	65.46	282.2	0.34	8	PVC	0.01	411	2	16	18	4.4	SM8	
Kirkland_Main-2837	Kirkland_Manholes-2198	65.46	Kirkland_Manholes-2193	64.5	239.8	0.4	8	PVC	0.01	446	3	25	28	6.2	SM14-Ex-EX187	
Kirkland_Main-2839	Kirkland_Manholes-2084	179.07	Kirkland_Manholes-2069	170.43	427.7	2.02	12	PVC	0.01	2,954	62	72	134	4.5	SM14-Ex-EX199	
Kirkland_Main-2840	Kirkland_Manholes-2085	183.55	Kirkland_Manholes-2084	179.07	426.7	1.05	12	PVC	0.01	2,130	62	68	129	6.1	SM14-Ex-EX199	
Kirkland_Main-2841	Kirkland_Manholes-2086	187.61	Kirkland_Manholes-2085	183.55	445.4	0.91	12	PVC	0.01	1,985	60	64	123	6.2	SM1	
Kirkland_Main-2842	Kirkland_Manholes-2074	213.49	Kirkland_Manholes-2086	187.61	333.1	7.77	8	PVC	0.01	1,965	45	52	97	4.9	SM14-Ex-EX246	
Kirkland_Main-2843	Kirkland_Manholes-2087	189.64	Kirkland_Manholes-2086	187.61	250.4	0.81	12	PVC	0.01	1,872	8	8	16	0.8	SM1	
Kirkland_Main-2844	Kirkland_Manholes-2301	194.13	Kirkland_Manholes-2087	189.64	258.5	1.74	12	PVC	0.01	2,740	0	4	4	0.2	SM1	
Kirkland_Main-2845	Kirkland_Manholes-2838	108.96	Kirkland_Manholes-2837	104.37	77.8	5.9	8	PVC	0.01	1,712	5	6	11	0.7		
Kirkland_Main-2846	Kirkland_Manholes-2837	104.37	Kirkland_Manholes-2836	60.97	275.8	15.74	8	PVC	0.01	2,797	5	12	17	0.6		
Kirkland_Main-2847	Kirkland_Manholes-2834	37.62	Kirkland_Manholes-2849	29.21	55.8	15.07	12	PVC	0.01	8,071	32	128	159	2	SM14-Ex-EX316	
Kirkland_Main-2848	Kirkland_Manholes-2833	29.99	Kirkland_Manholes-2849	29.21	264.4	0.3	18	PVC	0.01	3,329	439	1,076	1,587	47.7	SM14-Ex-EX309	
Kirkland_Main-2849	Kirkland_Manholes-2849	29.21	Kirkland_Manholes-2848	28.9	205.9	0.15	24	PVC	0.01	5,112	471	1,210	1,752	34.3	SM14-Ex-EX309	Drop Connection
Kirkland_Main-2850	Kirkland_Manholes-2848	27.55	Kirkland_Manholes-2842	26.9	429.8	0.15	24	PVC	0.01	5,133	474	1,216	1,762	34.3	SM14-Ex-EX309	
Kirkland_Main-2851	Kirkland_Manholes-1941	361.64	Kirkland_Manholes-1942	350.59	169	6.54	8	PVC	0.01	1,803	2	8	10	0.6		
Kirkland_Main-2852	Kirkland_Manholes-1943	356.18	Kirkland_Manholes-1942	350.59	121.8	4.59	8	PVC	0.01	1,511	0	4	4	0.3		
Kirkland_Main-2853	Kirkland_Manholes-1942	350.59	Kirkland_Manholes-1577	341.43	212	4.32	8	PVC	0.01	1,465	3	16	19	1.3		

Existing with Proposed Improvements - Peak Hour Flow - Pipe Capacity Table

Label	Upstream Node	Upstream Invert Elevation (ft)	Downstream Node	Downstream Invert Elevation (ft)	Length (ft)	Slope (%)	Diameter (in)	Material	Manning's n	Design Capacity (gpm)	Domestic Flow (gpm)	I/I Flow (gpm)	Total Flow (gpm)	Percent Full (%)	CIP No.	Notes
Kirkland_Main-2854	Kirkland_Manholes-1944	388.13	Kirkland_Manholes-1945	370.88	207.3	8.32	8	PVC	0.01	2,034	0	4	4	0.2		
Kirkland_Main-2855	Kirkland_Manholes-1945	370.88	Kirkland_Manholes-1946	363.75	185.3	3.85	8	PVC	0.01	1,383	1	8	9	0.7		
Kirkland_Main-2856	Kirkland_Manholes-1946	363.75	Kirkland_Manholes-1947	358.01	122.1	4.7	8	PVC	0.01	1,529	2	12	13	0.9		
Kirkland_Main-2857	Kirkland_Manholes-1947	358.01	Kirkland_Manholes-1948	350.2	125.9	6.2	8	PVC	0.01	1,756	2	16	18	1		
Kirkland_Main-2858	Kirkland_Manholes-1949	352.67	Kirkland_Manholes-1948	350.2	274.7	0.9	8	PVC	0.01	669	2	4	6	0.9		
Kirkland_Main-2859	Kirkland_Manholes-1948	350.2	Kirkland_Manholes-1950	344.53	121.4	4.67	8	PVC	0.01	1,524	5	24	29	1.9		
Kirkland_Main-2860	Kirkland_Manholes-1950	344.53	Kirkland_Manholes-1893	314.62	313.2	9.55	8	PVC	0.01	2,179	6	28	34	1.5		
Kirkland_Main-2861	Kirkland_Manholes-1952	275.36	Kirkland_Manholes-1951	275.06	208.2	0.14	8	PVC	0.01	268	3	40	43	16.1		
Kirkland_Main-2862	Kirkland_Manholes-1953	290.71	Kirkland_Manholes-1952	275.36	336.8	4.56	8	PVC	0.01	1,505	3	36	39	2.6		
Kirkland_Main-2863	Kirkland_Manholes-1957	343.4	Kirkland_Manholes-1956	335.87	142.5	5.28	8	PVC	0.01	1,620	0	4	4	0.2		
Kirkland_Main-2864	Kirkland_Manholes-1956	335.87	Kirkland_Manholes-1955	335.45	105.5	0.4	8	PVC	0.01	446	0	8	8	1.8		
Kirkland_Main-2865	Kirkland_Manholes-1975	436.73	Kirkland_Manholes-1974	432	247.5	1.91	8	PVC	0.01	975	21	123	144	14.7		
Kirkland_Main-2866	Kirkland_Manholes-1976	440.77	Kirkland_Manholes-1975	436.73	231.1	1.75	8	PVC	0.01	932	9	40	49	5.2		
Kirkland_Main-2867	Kirkland_Manholes-1978	440.32	Kirkland_Manholes-1975	436.73	342.8	1.05	8	PVC	0.01	721	11	79	90	12.5		
Kirkland_Main-2868	Kirkland_Manholes-1977	454.61	Kirkland_Manholes-1976	440.77	262.5	5.27	8	PVC	0.01	1,619	5	32	37	2.3		
Kirkland_Main-2869	Kirkland_Manholes-1980	464.9	Kirkland_Manholes-1977	454.61	328.6	3.13	8	PVC	0.01	1,248	4	24	28	2.2		
Kirkland_Main-2870	Kirkland_Manholes-1979	446.84	Kirkland_Manholes-1978	440.32	179.3	3.64	8	PVC	0.01	1,345	2	4	6	0.4		
Kirkland_Main-2871	Kirkland_Manholes-1984	465.6	Kirkland_Manholes-1980	464.9	159.8	0.44	8	PVC	0.01	467	3	16	19	4		
Kirkland_Main-2872	Kirkland_Manholes-1982	470.94	Kirkland_Manholes-1980	464.9	329.7	1.83	8	PVC	0.01	954	1	4	5	0.5		
Kirkland_Main-2873	Kirkland_Manholes-1985	470.88	Kirkland_Manholes-1981	467.1	204.6	1.85	8	PVC	0.01	958	1	4	5	0.5		
Kirkland_Main-2874	Kirkland_Manholes-1986	467.24	Kirkland_Manholes-1981	467.1	144.7	0.1	8	PVC	0.01	219	0	4	4	1.9		
Kirkland_Main-2875	Kirkland_Manholes-1983	469.93	Kirkland_Manholes-2019	467.83	75.8	2.77	8	PVC	0.01	1,174	1	4	4	0.4		
Kirkland_Main-2876	Kirkland_Manholes-1981	467.1	Kirkland_Manholes-1984	465.6	153	0.98	8	PVC	0.01	698	1	12	13	1.9		
Kirkland_Main-2877	Kirkland_Manholes-1987	443.37	Kirkland_Manholes-1976	440.77	252.9	1.03	8	PVC	0.01	715	1	4	5	0.7		
Kirkland_Main-2878	Kirkland_Manholes-2002	429.3	Kirkland_Manholes-2000	426.18	243.7	1.28	8	PVC	0.01	798	0	8	8	1	SM14-Ex-EX209	
Kirkland_Main-2879	Kirkland_Manholes-2000	426.18	Kirkland_Manholes-2001	424.5	24.1	6.98	8	PVC	0.01	1,863	12	64	75	4	SM14-Ex-EX209	
Kirkland_Main-2880	Kirkland_Manholes-1999	430.91	Kirkland_Manholes-2000	426.18	304.8	1.55	8	PVC	0.01	878	11	52	63	7.2	SM14-Ex-EX211	
Kirkland_Main-2881	Kirkland_Manholes-2001	424.5	Kirkland_Manholes-2063	422.68	357.6	0.51	8	PVC	0.01	503	12	68	79	15.8	SM14-Ex-EX209	
Kirkland_Main-2882	Kirkland_Manholes-2003	431.01	Kirkland_Manholes-2002	429.3	155.3	1.1	8	PVC	0.01	740	0	4	4	0.5		
Kirkland_Main-2883	Kirkland_Manholes-2015	418.27	Kirkland_Manholes-2014	416.63	83.6	1.96	8	PVC	0.01	988	19	87	106	10.8		
Kirkland_Main-2884	Kirkland_Manholes-2014	416.63	Kirkland_Manholes-2013	413.74	146.6	1.97	8	PVC	0.01	990	19	91	111	11.2		
Kirkland_Main-2886	Kirkland_Manholes-2010	424.43	Kirkland_Manholes-2016	421.46	333.6	0.89	8	PVC	0.01	665	16	79	96	14.4		
Kirkland_Main-2887	Kirkland_Manholes-2016	421.46	Kirkland_Manholes-2015	418.27	330.4	0.97	8	PVC	0.01	693	18	83	101	14.6		
Kirkland_Main-2889	Kirkland_Manholes-2021	473.17	Kirkland_Manholes-2020	468.34	27.5	17.56	8	PVC	0.01	2,954	24	91	116	3.9		
Kirkland_Main-2890	Kirkland_Manholes-2020	468.34	Kirkland_Manholes-2019	467.83	127.5	0.4	10	PVC	0.01	809	98	238	337	41.7		
Kirkland_Main-2891	Kirkland_Manholes-2023	466.76	Kirkland_Manholes-2022	466	41.6	1.83	8	PVC	0.01	953	7	20	27	2.8		
Kirkland_Main-2892	Kirkland_Manholes-2037	465.67	Kirkland_Manholes-2036	452.58	367.2	3.57	8	PVC	0.01	1,331	9	16	25	1.9	SM14-Ex-EX266	
Kirkland_Main-2893	Kirkland_Manholes-2041	465.42	Kirkland_Manholes-2042	455.6	502.4	1.95	8	PVC	0.01	986	2	4	6	0.6	SM14-Ex-EX265	
Kirkland_Main-2894	Kirkland_Manholes-2042	455.6	Kirkland_Manholes-2043	454.68	150.3	0.61	12	PVC	0.01	1,626	67	278	345	21.2	SM14-Ex-EX214	
Kirkland_Main-2895	Kirkland_Manholes-2044	435.14	Kirkland_Manholes-2045	432.5	20.8	12.67	12	PVC	0.01	7,399	69	286	355	4.8	SM14-Ex-EX214	
Kirkland_Main-2896	Kirkland_Manholes-2043	454.68	Kirkland_Manholes-2044	435.14	356.2	5.49	12	PVC	0.01	4,869	68	282	350	7.2	SM14-Ex-EX214	
Kirkland_Main-2897	Kirkland_Manholes-2046	437.24	Kirkland_Manholes-2045	432.5	199.5	2.38	10	PVC	0.01	1,970	127	338	464	23.6		
Kirkland_Main-2898	Kirkland_Manholes-2047	441.15	Kirkland_Manholes-2046	437.24	49.2	7.95	10	PVC	0.01	3,605	126	334	460	12.7		
Kirkland_Main-2899	Kirkland_Manholes-2048	442.51	Kirkland_Manholes-2047	441.15	76.6	1.77	8	PVC	0.01	939	125	330	455	48.5	SM14-Ex-EX264	
Kirkland_Main-2900	Kirkland_Manholes-2049	454.48	Kirkland_Manholes-2050	439.64	163.1	9.1	8	PVC	0.01	2,126	1	4	5	0.3	SM14-Ex-EX263	
Kirkland_Main-2901	Kirkland_Manholes-2050	439.64	Kirkland_Manholes-2051	434.18	313	1.74	8	PVC	0.01	931	3	8	11	1.2	SM14-Ex-EX263	
Kirkland_Main-2902	Kirkland_Manholes-2051	434.18	Kirkland_Manholes-2054	429.73	307.2	1.45	8	PVC	0.01	849	5	12	17	2	SM14-Ex-EX263	
Kirkland_Main-2903	Kirkland_Manholes-2053	424.91	Kirkland_Manholes-2285	419.89	165.8	3.03	8	PVC	0.01	1,227	1	4	5	0.4	SM14-Ex-EX248	
Kirkland_Main-2904	Kirkland_Manholes-2054	429.73	Kirkland_Manholes-2055	427.92	21.3	8.48	8	PVC	0.01	2,053	5	16	21	1		
Kirkland_Main-2905	Kirkland_Manholes-3044	18.06	Kirkland_Manholes-2736	17.76	69.7	0.43	18	PVC	0.01	4,020	212	516	728	18.1	SM14-Ex-EX289	
Kirkland_Main-2906	Kirkland_Manholes-2045	432.5	Kirkland_Manholes-2055	427.92	351.4	1.3	10	PVC	0.01	1,460	196	628	824	56.5		
Kirkland_Main-2907	Kirkland_Manholes-2057	422.6	Kirkland_Manholes-2056	422.2	14.4	2.79	10	PVC	0.01	2,134	203	664	866	40.6		
Kirkland_Main-2908	Kirkland_Manholes-1848	462	Kirkland_Manholes-1216	443.89	186.3	9.72	8	PVC	0.01	2,198	2	4	6	0.3		
Kirkland_Main-2909	Kirkland_Manholes-2056	422.2	Kirkland_Manholes-2285	419.89	62.2	3.71	8	PVC	0.01	1,359	203	668	870	64.1		
Kirkland_Main-2910	Kirkland_Manholes-2058	427.27	Kirkland_Manholes-2057	422.6	119.2	3.92	10	PVC	0.01	2,531	202	660	862	34.1		
Kirkland_Main-2911	Kirkland_Manholes-2055	427.92	Kirkland_Manholes-2058	427.27	53.1	1.22	10	PVC	0.01	1,414	202	648	849	60.1		
Kirkland_Main-2912	Kirkland_Manholes-2059	433	Kirkland_Manholes-2058	427.27	231.2	2.48	8	PVC	0.01	1,110	0	8	8	0.7	SM14-Ex-EX213	
Kirkland_Main-2913	Kirkland_Manholes-3082	428.49	Kirkland_Manholes-1992	427.27	187.8	0.65	8	PVC	0.01	568	2	8	10	1.8		
Kirkland_Main-2914	Kirkland_Manholes-1992	427.27	Kirkland_Manholes-2009	426.97	143.6	0.21	8	PVC	0.01	322	10	48	57	17.8		
Kirkland_Main-2915	Kirkland_Manholes-1991	431.18	Kirkland_Manholes-1992	427.27	327	1.2	8	PVC	0.01	771	7	36	43	5.6		
Kirkland_Main-2916	Kirkland_Manholes-2004	427.75	Kirkland_Manholes-2010	424.43	322.6	1.03	8	PVC	0.01	715	4	24	27	3.8		
Kirkland_Main-2917	Kirkland_Manholes-2007	429.08	Kirkland_Manholes-2004	427.75	98.7	1.35	8	PVC	0.01	819	4	20	23	2.9		

Existing with Proposed Improvements - Peak Hour Flow - Pipe Capacity Table

Label	Upstream Node	Upstream Invert Elevation (ft)	Downstream Node	Downstream Invert Elevation (ft)	Length (ft)	Slope (%)	Diameter (in)	Material	Manning's n	Design Capacity (gpm)	Domestic Flow (gpm)	I/I Flow (gpm)	Total Flow (gpm)	Percent Full (%)	CIP No.	Notes
Kirkland_Main-2918	Kirkland_Manholes-2260	285.07	Kirkland_Manholes-2259	272.05	278.2	4.68	12	PVC	0.01	4,497	238	854	1,092	24.3	SM14-Ex-EX248	
Kirkland_Main-2919	Kirkland_Manholes-2259	272.05	Kirkland_Manholes-2258	263.77	196.6	4.21	12	PVC	0.01	4,266	243	862	1,105	25.9	SM14-Ex-EX248	
Kirkland_Main-2920	Kirkland_Manholes-2323	247.45	Kirkland_Manholes-2324	245.37	33.9	6.13	8	PVC	0.01	1,746	35	131	166	9.5		
Kirkland_Main-2921	Kirkland_Manholes-2322	259.98	Kirkland_Manholes-2323	247.45	184.9	6.78	8	PVC	0.01	1,836	34	127	161	8.8	SM14-Ex-EX252	
Kirkland_Main-2922	Kirkland_Manholes-2325	246.61	Kirkland_Manholes-2324	245.37	131.1	0.95	8	PVC	0.01	686	5	12	17	2.4		
Kirkland_Main-2923	Kirkland_Manholes-2329	258.36	Kirkland_Manholes-2325	246.61	302.7	3.88	8	PVC	0.01	1,389	3	8	11	0.8		
Kirkland_Main-2924	Kirkland_Manholes-2328	273.89	Kirkland_Manholes-2329	258.36	228.5	6.8	8	PVC	0.01	1,838	2	4	6	0.3		
Kirkland_Main-2925	Kirkland_Manholes-2339	347.35	Kirkland_Manholes-2337	345.83	131	1.16	8	PVC	0.01	760	3	8	11	1.4	SM14-Ex-EX256	
Kirkland_Main-2926	Kirkland_Manholes-2337	345.83	Kirkland_Manholes-2338	328.54	114.6	15.08	8	PVC	0.01	2,738	5	12	16	0.6	SM14-Ex-EX256	
Kirkland_Main-2927	Kirkland_Manholes-2334	313.34	Kirkland_Manholes-2333	308.81	129.8	3.49	8	PVC	0.01	1,317	25	75	100	7.6	SM14-Ex-EX252	
Kirkland_Main-2928	Kirkland_Manholes-2333	308.81	Kirkland_Manholes-2332	296.43	179.4	6.9	8	PVC	0.01	1,852	25	79	105	5.7	SM14-Ex-EX252	
Kirkland_Main-2929	Kirkland_Manholes-2332	296.43	Kirkland_Manholes-2331	295.51	98.1	0.94	8	PVC	0.01	683	27	87	115	16.8	SM14-Ex-EX252	
Kirkland_Main-2930	Kirkland_Manholes-2718	21.4	Kirkland_Manholes-2721	21.2	187	0.11	12	PVC	0.01	680	74	36	110	16.2	SM14-Ex-EX289	
Kirkland_Main-2931	Kirkland_Manholes-2331	295.51	Kirkland_Manholes-2330	295.18	115.3	0.29	8	PVC	0.01	377	28	91	119	31.6	SM14-Ex-EX252	
Kirkland_Main-2932	Kirkland_Manholes-2327	280.44	Kirkland_Manholes-2326	264.71	213.4	7.37	8	PVC	0.01	1,914	31	119	151	7.9	SM14-Ex-EX252	
Kirkland_Main-2933	Kirkland_Manholes-2326	264.71	Kirkland_Manholes-2322	259.98	165.9	2.85	8	PVC	0.01	1,190	33	123	156	13.1	SM14-Ex-EX252	
Kirkland_Main-2935	Kirkland_Manholes-2342	370.03	Kirkland_Manholes-2339	347.35	229.4	9.89	8	PVC	0.01	2,217	2	4	6	0.3	SM14-Ex-EX256	
Kirkland_Main-2936	Kirkland_Manholes-2340	335.99	Kirkland_Manholes-2379	312.61	331.3	7.06	8	PVC	0.01	1,873	1	4	5	0.3	SM14-Ex-EX257	
Kirkland_Main-2937	Kirkland_Manholes-2338	328.54	Kirkland_Manholes-2341	327.28	253.7	0.5	8	PVC	0.01	497	6	16	22	4.5	SM14-Ex-EX256	
Kirkland_Main-2938	Kirkland_Manholes-2341	327.28	Kirkland_Manholes-2335	323.22	289.5	1.4	8	PVC	0.01	835	9	24	33	3.9	SM14-Ex-EX256	
Kirkland_Main-2939	Kirkland_Manholes-2336	342.09	Kirkland_Manholes-2341	327.28	137.3	10.78	8	PVC	0.01	2,315	2	4	6	0.2	SM14-Ex-EX256	Drop Connection
Kirkland_Main-2940	Kirkland_Manholes-2349	361.19	Kirkland_Manholes-2335	323.22	315.1	12.05	8	PVC	0.01	2,448	2	4	6	0.2	SM14-Ex-EX252	
Kirkland_Main-2941	Kirkland_Manholes-2335	323.22	Kirkland_Manholes-2334	323.19	8.2	0.4	8	PVC	0.01	446	11	32	43	9.5	SM14-Ex-EX252	Drop Connection
Kirkland_Main-2942	Kirkland_Manholes-2343	315.2	Kirkland_Manholes-2348	314.6	208.7	0.29	8	PVC	0.01	378	13	36	49	12.8	SM14-Ex-EX254	
Kirkland_Main-2944	Kirkland_Manholes-2915	422.99	Kirkland_Manholes-2916	416.17	267.2	2.55	8	PVC	0.01	1,126	4	16	19	1.7		
Kirkland_Main-2945	Kirkland_Manholes-2916	416.17	Kirkland_Manholes-2936	415.17	403.5	0.25	8	PVC	0.01	351	5	24	29	8.3		
Kirkland_Main-2946	Kirkland_Manholes-2917	449.84	Kirkland_Manholes-2918	440.81	194.6	4.64	8	PVC	0.01	1,519	1	4	5	0.3		
Kirkland_Main-2947	Kirkland_Manholes-2918	440.81	Kirkland_Manholes-2919	429.45	198.9	5.71	8	PVC	0.01	1,685	1	8	9	0.6		
Kirkland_Main-2948	Kirkland_Manholes-2919	429.45	Kirkland_Manholes-2915	422.99	217.1	2.98	8	PVC	0.01	1,216	3	12	15	1.2		
Kirkland_Main-2949	Kirkland_Manholes-2922	91.28	Kirkland_Manholes-2921	73.76	147.5	11.88	8	PVC	0.01	2,430	1	13	14	0.6		
Kirkland_Main-2951	Kirkland_Manholes-2923	92.6	Kirkland_Manholes-2922	91.28	84.5	1.56	8	PVC	0.01	881	0	4	4	0.5		
Kirkland_Main-2952	Kirkland_Manholes-2924	104.01	Kirkland_Manholes-2922	91.28	265	4.8	8	PVC	0.01	1,545	1	4	5	0.4		
Kirkland_Main-2953	Kirkland_Manholes-2423	267.38	Kirkland_Manholes-2421	253.02	328.6	4.37	8	PVC	0.01	1,474	3	4	7	0.5		
Kirkland_Main-2954	Kirkland_Manholes-2429	273.52	Kirkland_Manholes-2424	257.66	398.8	3.98	8	PVC	0.01	1,406	29	95	124	8.8	SM14-Ex-EX260	
Kirkland_Main-2955	Kirkland_Manholes-2425	261.07	Kirkland_Manholes-2424	257.66	270.7	1.26	12	PVC	0.01	2,333	179	211	389	16.7	SM2	
Kirkland_Main-2956	Kirkland_Manholes-2426	264.11	Kirkland_Manholes-2425	261.07	237.2	1.28	12	PVC	0.01	2,353	173	191	364	15.5	SM2	
Kirkland_Main-2957	Kirkland_Manholes-2430	273.69	Kirkland_Manholes-2425	261.07	254.1	4.97	8	PVC	0.01	1,571	5	16	21	1.3	SM14-Ex-EX286	
Kirkland_Main-2958	Kirkland_Manholes-2427	267.5	Kirkland_Manholes-2426	266.42	268.8	0.4	12	PVC	0.01	1,315	172	187	359	27.3	SM2	Drop Connection
Kirkland_Main-2959	Kirkland_Manholes-2428	270.37	Kirkland_Manholes-2427	267.5	310.1	0.93	8	PVC	0.01	678	120	159	279	41.1	SM2	
Kirkland_Main-2960	Kirkland_Manholes-2431	277.03	Kirkland_Manholes-2430	273.69	201.8	1.66	8	PVC	0.01	907	0	4	4	0.5		
Kirkland_Main-2961	Kirkland_Manholes-2433	263.87	Kirkland_Manholes-2434	245.33	172.7	10.73	8	PVC	0.01	2,310	3	8	11	0.5	SM14-Ex-EX244	
Kirkland_Main-2962	Kirkland_Manholes-2434	245.33	Kirkland_Manholes-2437	244.43	228.6	0.39	8	PVC	0.01	442	5	12	16	3.7	SM14-Ex-EX244	
Kirkland_Main-2963	Kirkland_Manholes-2437	244.43	Kirkland_Manholes-2436	225.88	256.7	7.23	8	PVC	0.01	1,895	6	16	22	1.2	SM14-Ex-EX244	
Kirkland_Main-2964	Kirkland_Manholes-2514	400.04	Kirkland_Manholes-2517	387	217.1	6.01	8	PVC	0.01	1,728	9	12	21	1.2		
Kirkland_Main-2965	Kirkland_Manholes-2515	393.7	Kirkland_Manholes-2516	391.18	190.1	1.33	8	PVC	0.01	812	4	2	6	0.7		
Kirkland_Main-2966	Kirkland_Manholes-2516	391.18	Kirkland_Manholes-2517	387	163.7	2.55	8	PVC	0.01	1,127	5	5	10	0.9		
Kirkland_Main-2967	Kirkland_Manholes-2517	387	Kirkland_Manholes-2518	378.45	142.8	5.99	8	PVC	0.01	1,725	15	19	34	2		
Kirkland_Main-2968	Kirkland_Manholes-2518	378.45	Kirkland_Manholes-2524	346.56	373.5	8.54	8	PVC	0.01	2,060	18	21	39	1.9		
Kirkland_Main-2969	Kirkland_Manholes-2520	374.03	Kirkland_Manholes-2521	363.83	98.2	10.38	8	PVC	0.01	2,272	2	2	4	0.2		
Kirkland_Main-2970	Kirkland_Manholes-2435	226.37	Kirkland_Manholes-2436	225.88	121.8	0.4	8	PVC	0.01	446	2	4	6	1.3	SM14-Ex-EX285	
Kirkland_Main-2971	Kirkland_Manholes-2436	225.88	Kirkland_Manholes-2438	209.72	279.9	5.77	8	PVC	0.01	1,694	9	24	32	1.9	SM14-Ex-EX244	
Kirkland_Main-2972	Kirkland_Manholes-2438	209.72	Kirkland_Manholes-2441	205.09	260.5	1.78	8	PVC	0.01	940	13	36	49	5.2	SM14-Ex-EX244	
Kirkland_Main-2973	Kirkland_Manholes-2439	217.92	Kirkland_Manholes-2438	209.72	117.3	6.99	8	PVC	0.01	1,864	3	8	11	0.6	SM14-Ex-EX284	
Kirkland_Main-2974	Kirkland_Manholes-2440	242.45	Kirkland_Manholes-2439	217.92	136.9	17.92	8	PVC	0.01	2,985	2	4	6	0.2	SM14-Ex-EX284	
Kirkland_Main-2975	Kirkland_Manholes-2441	205.09	Kirkland_Manholes-2442	204.35	67.9	1.09	8	PVC	0.01	736	14	40	53	7.3	SM14-Ex-EX244	
Kirkland_Main-2977	Kirkland_Manholes-2992	396.35	Kirkland_Manholes-2991	395.79	171.2	0.33	8	PVC	0.01	403	2	20	22	5.4		
Kirkland_Main-2978	Kirkland_Manholes-2991	395.79	Kirkland_Manholes-1328	394.1	142.6	1.18	8	PVC	0.01	767	2	24	26	3.4		
Kirkland_Main-2979	Kirkland_Manholes-2737	259.86	Kirkland_Manholes-2310	256	91.2	4.23	8	PVC	0.01	1,451	3	9	12	0.8		
Kirkland_Main-2980	Kirkland_Manholes-2442	204.35	Kirkland_Manholes-2443	200	192.1	2.26	8	PVC	0.01	1,061	14	44	58	5.5	SM14-Ex-EX244	
Kirkland_Main-2981	Kirkland_Manholes-2444	199.73	Kirkland_Manholes-2445	191.11	277	3.11	8	PVC	0.01	1,244	18	64	82	6.6	SM14-Ex-EX244	
Kirkland_Main-2982	Kirkland_Manholes-2443	200	Kirkland_Manholes-2444	199.73	20.4	1.32	8	PVC	0.01	810	15	48	63	7.7	SM14-Ex-EX244	
Kirkland_Main-2983	Kirkland_Manholes-2668	18.29	Kirkland_Manholes-2318	17.6	53.6	1.29	8	PVC	0.01	800	1	6	8	1		

Existing with Proposed Improvements - Peak Hour Flow - Pipe Capacity Table

Label	Upstream Node	Upstream Invert Elevation (ft)	Downstream Node	Downstream Invert Elevation (ft)	Length (ft)	Slope (%)	Diameter (in)	Material	Manning's n	Design Capacity (gpm)	Domestic Flow (gpm)	I/I Flow (gpm)	Total Flow (gpm)	Percent Full (%)	CIP No.	Notes
Kirkland_Main-2984	Kirkland_Manholes-2320	18	Kirkland_Manholes-2319	17.7	261.8	0.11	21	PVC	0.01	3,129	102	273	375	12		
Kirkland_Main-2985	Kirkland_Manholes-2321	18.2	Kirkland_Manholes-2320	18	193.7	0.1	21	PVC	0.01	2,971	97	214	312	10.5		
Kirkland_Main-2986	Kirkland_Manholes-2303	195.57	Kirkland_Manholes-2302	194.37	30.3	3.96	12	PVC	0.01	4,136	549	1,470	2,019	48.8	SM2	
Kirkland_Main-2987	Kirkland_Manholes-2302	194.37	Kirkland_Manholes-2304	192.91	51.2	2.85	12	PVC	0.01	3,510	549	1,474	2,023	57.7		
Kirkland_Main-2988	Kirkland_Manholes-2285	419.89	Kirkland_Manholes-2284	417.52	64.2	3.69	8	PVC	0.01	1,355	204	675	879	64.9	SM14-Ex-EX248	
Kirkland_Main-2989	Kirkland_Manholes-2284	417.52	Kirkland_Manholes-2282	401.71	231.8	6.82	8	PVC	0.01	1,841	204	679	884	48	SM14-Ex-EX248	
Kirkland_Main-2990	Kirkland_Manholes-2263	374.13	Kirkland_Manholes-2262	311.78	761.4	8.19	8	PVC	0.01	2,018	232	842	1,074	53.2	SM14-Ex-EX248	
Kirkland_Main-2991	Kirkland_Manholes-2669	379.65	Kirkland_Manholes-2290	372.36	83.4	8.74	8	PVC	0.01	2,084	4	4	8	0.4		
Kirkland_Main-2992	Kirkland_Manholes-2290	372.36	Kirkland_Manholes-2291	367.48	64.2	7.6	8	PVC	0.01	1,944	4	8	12	0.6		
Kirkland_Main-2993	Kirkland_Manholes-2291	367.48	Kirkland_Manholes-2292	366.54	71.9	1.31	8	PVC	0.01	806	5	12	17	2.1		
Kirkland_Main-2994	Kirkland_Manholes-2292	366.54	Kirkland_Manholes-2293	362.58	154	2.57	8	PVC	0.01	1,131	5	16	21	1.8		
Kirkland_Main-2995	Kirkland_Manholes-2670	399.73	Kirkland_Manholes-2298	382.52	120.1	14.33	8	PVC	0.01	2,669	3	8	11	0.4		Drop Connection
Kirkland_Main-2997	Kirkland_Manholes-2673	372.3	Kirkland_Manholes-2675	350.82	245.7	8.74	8	PVC	0.01	2,084	1	4	5	0.3	SM14-Ex-EX208	
Kirkland_Main-2998	Kirkland_Manholes-2709	292.14	Kirkland_Manholes-2708	281.32	58.6	18.46	8	PVC	0.01	3,029	1	16	17	0.6		
Kirkland_Main-2999	Kirkland_Manholes-2708	281.32	Kirkland_Manholes-2707	271.62	125.5	7.73	8	PVC	0.01	1,960	1	20	21	1.1		
Kirkland_Main-3000	Kirkland_Manholes-2711	316.09	Kirkland_Manholes-2709	292.14	170	14.09	8	PVC	0.01	2,647	1	8	9	0.4		
Kirkland_Main-3001	Kirkland_Manholes-2707	271.62	Kirkland_Manholes-2704	250.11	214	10.05	8	PVC	0.01	2,235	2	24	26	1.2		
Kirkland_Main-3002	Kirkland_Manholes-2703	250.19	Kirkland_Manholes-2704	250.11	401.9	0.02	8	PVC	0.01	99	4	16	20	20		
Kirkland_Main-3003	Kirkland_Manholes-2712	326.54	Kirkland_Manholes-2711	316.09	154.3	6.77	8	PVC	0.01	1,835	1	4	5	0.3		
Kirkland_Main-3005	Kirkland_Manholes-2714	316.79	Kirkland_Manholes-2713	280.32	397.8	9.17	8	PVC	0.01	2,135	2	4	6	0.3	SM14-Ex-EX204	
Kirkland_Main-3006	Kirkland_Manholes-2713	280.32	Kirkland_Manholes-2702	256.62	323.4	7.33	8	PVC	0.01	1,909	4	8	12	0.6	SM14-Ex-EX204	
Kirkland_Main-3008	Kirkland_Manholes-2721	21.2	Kirkland_Manholes-2722	21	44.5	0.45	12	PVC	0.01	1,394	76	43	118	8.5	SM14-Ex-EX289	
Kirkland_Main-3009	Kirkland_Manholes-2724	25.33	Kirkland_Manholes-2723	21.5	122.9	3.12	8	PVC	0.01	1,245	11	6	17	1.4	SM14-Ex-EX288	
Kirkland_Main-3010	Kirkland_Manholes-2723	21.5	Kirkland_Manholes-2722	21	70.9	0.7	8	PVC	0.01	592	12	12	24	4.1	SM14-Ex-EX288	
Kirkland_Main-3011	Kirkland_Manholes-2727	13	Kirkland_Manholes-2726	12.39	121.7	0.5	18	PVC	0.01	4,339	227	589	816	18.8	SM14-Ex-EX289	
Kirkland_Main-3012	Kirkland_Manholes-2729	13.77	Kirkland_Manholes-2727	13	208.7	0.37	18	PVC	0.01	3,723	226	583	809	21.7	SM14-Ex-EX289	
Kirkland_Main-3013	Kirkland_Manholes-2730	14.43	Kirkland_Manholes-2728	13.83	161.6	0.37	18	PVC	0.01	3,734	224	571	795	21.3	SM14-Ex-EX289	
Kirkland_Main-3014	Kirkland_Manholes-2728	13.83	Kirkland_Manholes-2729	13.77	16.5	0.36	18	PVC	0.01	3,696	226	577	803	21.7	SM14-Ex-EX289	
Kirkland_Main-3015	Kirkland_Manholes-2731	15.6	Kirkland_Manholes-2977	14.89	193.8	0.37	18	PVC	0.01	3,709	223	553	776	20.9	SM14-Ex-EX289	
Kirkland_Main-3016	Kirkland_Manholes-2732	15.71	Kirkland_Manholes-2731	15.6	29.6	0.37	18	PVC	0.01	3,738	221	547	768	20.5	SM14-Ex-EX289	
Kirkland_Main-3017	Kirkland_Manholes-2733	16.02	Kirkland_Manholes-2732	15.71	84.3	0.37	18	PVC	0.01	3,716	218	541	758	20.4	SM14-Ex-EX289	
Kirkland_Main-3018	Kirkland_Manholes-2735	16.81	Kirkland_Manholes-2733	16.02	214.5	0.37	18	PVC	0.01	3,719	217	534	751	20.2	SM14-Ex-EX289	
Kirkland_Main-3019	Kirkland_Manholes-2734	17.15	Kirkland_Manholes-2735	16.81	92.8	0.37	18	PVC	0.01	3,710	216	528	744	20.1	SM14-Ex-EX289	
Kirkland_Main-3020	Kirkland_Manholes-2736	17.76	Kirkland_Manholes-2734	17.15	164.5	0.37	18	PVC	0.01	3,733	216	522	738	19.8	SM14-Ex-EX289	
Kirkland_Main-3021	Kirkland_Manholes-2741	83.04	Kirkland_Manholes-2739	73.09	180.1	5.53	8	PVC	0.01	1,657	5	18	24	1.4		
Kirkland_Main-3022	Kirkland_Manholes-2740	73.45	Kirkland_Manholes-2739	73.09	167.3	0.22	8	PVC	0.01	327	0	6	6	1.9		
Kirkland_Main-3023	Kirkland_Manholes-2739	73.09	Kirkland_Manholes-2203	62.94	47.2	21.5	8	PVC	0.01	3,269	12	55	67	2		
Kirkland_Main-3024	Kirkland_Manholes-2744	119.06	Kirkland_Manholes-2739	73.09	200.2	22.96	8	PVC	0.01	3,378	7	24	31	0.9		
Kirkland_Main-3025	Kirkland_Manholes-2745	129.7	Kirkland_Manholes-2744	119.06	80.2	13.27	8	PVC	0.01	2,569	0	6	6	0.2		
Kirkland_Main-3026	Kirkland_Manholes-2746	121.99	Kirkland_Manholes-2744	119.06	88.8	3.3	8	PVC	0.01	1,280	0	12	12	0.9		
Kirkland_Main-3027	Kirkland_Manholes-2747	133.27	Kirkland_Manholes-2746	121.99	59.4	19	8	PVC	0.01	3,073	0	6	6	0.2		
Kirkland_Main-3028	Kirkland_Manholes-2742	91.54	Kirkland_Manholes-2741	83.04	69.2	12.29	8	PVC	0.01	2,471	5	12	18	0.7		
Kirkland_Main-3029	Kirkland_Manholes-2743	92.6	Kirkland_Manholes-2742	91.54	64.4	1.65	8	PVC	0.01	904	5	6	12	1.3		
Kirkland_Main-3030	Kirkland_Manholes-2748	105.07	Kirkland_Manholes-2749	94.38	144.8	7.38	8	PVC	0.01	1,916	0	6	6	0.3		
Kirkland_Main-3031	Kirkland_Manholes-2749	94.38	Kirkland_Manholes-2880	81.72	189.8	6.67	8	PVC	0.01	1,821	24	18	43	2.3		
Kirkland_Main-3032	Kirkland_Manholes-2756	10.03	Kirkland_Manholes-2754	9.95	319.1	0.03	36	PVC	0.01	6,161	506	1,841	2,649	43	SM14-Ex-EX10	
Kirkland_Main-3033	Kirkland_Manholes-2757	10.95	Kirkland_Manholes-2756	10.03	146.2	0.63	36	PVC	0.01	30,867	506	1,837	2,645	8.6	SM14-Ex-EX10	
Kirkland_Main-3036	Kirkland_Manholes-2765	13.19	Kirkland_Manholes-2763	13.15	315.8	0.01	36	PVC	0.01	4,380	445	1,547	2,293	52.4	SM14-Ex-EX10	
Kirkland_Main-3037	Kirkland_Manholes-2766	361.12	Kirkland_Manholes-2548	359.75	342.1	0.4	8	PVC	0.01	446	1	4	5	1		
Kirkland_Main-3038	Kirkland_Manholes-397	247.33	Kirkland_Manholes-376	239.8	215.8	3.49	8	PVC	0.01	1,317	55	226	282	21.4		
Kirkland_Main-3039	Kirkland_Manholes-2769	260.32	Kirkland_Manholes-1077	252.59	364.2	2.12	8	PVC	0.01	1,027	3	8	11	1		
Kirkland_Main-3044	Kirkland_Manholes-2275	411.72	Kirkland_Manholes-2276	410.45	52.8	2.4	8	PVC	0.01	1,093	1	4	5	0.4		
Kirkland_Main-3045	Kirkland_Manholes-2771	320.53	Kirkland_Manholes-2772	308.23	258.2	4.76	8	PVC	0.01	1,539	29	88	117	7.6		
Kirkland_Main-3046	Kirkland_Manholes-2776	334.45	Kirkland_Manholes-2775	332.7	391.2	0.45	8	PVC	0.01	472	29	81	110	23.3		
Kirkland_Main-3047	Kirkland_Manholes-2775	332.7	Kirkland_Manholes-2774	330.08	382.8	0.68	8	PVC	0.01	583	29	84	112	19.3		
Kirkland_Main-3048	Kirkland_Manholes-2774	330.08	Kirkland_Manholes-2771	320.53	310.5	3.08	8	PVC	0.01	1,237	29	86	115	9.3		
Kirkland_Main-3049	Kirkland_Manholes-2782	326.16	Kirkland_Manholes-2781	293.52	273.1	11.95	8	PVC	0.01	2,438	0	3	3	0.1		
Kirkland_Main-3050	Kirkland_Manholes-2781	293.52	Kirkland_Manholes-2780	291.73	199	0.9	8	PVC	0.01	669	19	5	24	3.6		
Kirkland_Main-3051	Kirkland_Manholes-2780	291.73	Kirkland_Manholes-2779	288.37	73	4.6	8	PVC	0.01	1,512	19	8	27	1.8		
Kirkland_Main-3052	Kirkland_Manholes-2779	288.37	Kirkland_Manholes-2778	255.64	255.5	12.81	8	PVC	0.01	2,524	19	11	30	1.2		
Kirkland_Main-3053	Kirkland_Manholes-2777	256.44	Kirkland_Manholes-2778	255.64	115.8	0.69	8	PVC	0.01	586	0	3	3	0.5		
Kirkland_Main-3054	Kirkland_Manholes-2785	259.34	Kirkland_Manholes-2786	258.1	92.6	1.34	8	PVC	0.01	816	7	48	55	6.8		

Existing with Proposed Improvements - Peak Hour Flow - Pipe Capacity Table

Label	Upstream Node	Upstream Invert Elevation (ft)	Downstream Node	Downstream Invert Elevation (ft)	Length (ft)	Slope (%)	Diameter (in)	Material	Manning's n	Design Capacity (gpm)	Domestic Flow (gpm)	I/I Flow (gpm)	Total Flow (gpm)	Percent Full (%)	CIP No.	Notes
Kirkland_Main-3055	Kirkland_Manholes-2784	262.56	Kirkland_Manholes-2785	259.34	108.2	2.97	8	PVC	0.01	1,216	7	44	50	4.1		
Kirkland_Main-3057	Kirkland_Manholes-2787	252.17	Kirkland_Manholes-2788	251.6	73	0.78	8	PVC	0.01	623	14	87	102	16.3	SM14-Ex-EX313	
Kirkland_Main-3059	Kirkland_Manholes-2798	192.18	Kirkland_Manholes-2797	190.87	110.6	1.18	8	PVC	0.01	767	1	4	5	0.7	SM14-Ex-EX296	
Kirkland_Main-3060	Kirkland_Manholes-2797	190.87	Kirkland_Manholes-2796	185.45	211.8	2.56	8	PVC	0.01	1,128	5	16	21	1.9	SM14-Ex-EX296	
Kirkland_Main-3061	Kirkland_Manholes-2799	233.81	Kirkland_Manholes-2800	221.07	125.6	10.15	8	PVC	0.01	2,246	1	4	5	0.2	SM14-Ex-EX302	
Kirkland_Main-3062	Kirkland_Manholes-2800	221.07	Kirkland_Manholes-2797	190.87	260	11.62	8	PVC	0.01	2,403	2	8	10	0.4	SM14-Ex-EX302	
Kirkland_Main-3063	Kirkland_Manholes-2802	238.36	O-39	228.33	111.4	9	8	PVC	0.01	2,116	19	22	41	1.9		
Kirkland_Main-3064	Kirkland_Manholes-2810	44.75	Kirkland_Manholes-2809	44.5	62.2	0.4	8	PVC	0.01	446	22	91	114	25.5	SM14-Ex-EX316	Drop Connection
Kirkland_Main-3065	Kirkland_Manholes-2808	55.6	Kirkland_Manholes-2807	47.79	63.2	12.36	8	PVC	0.01	2,479	0	12	12	0.5	SM14-Ex-EX317	
Kirkland_Main-3066	Kirkland_Manholes-2807	47.79	Kirkland_Manholes-2810	44.75	258.6	1.18	8	PVC	0.01	764	1	79	80	10.5	SM14-Ex-EX316	
Kirkland_Main-3067	Kirkland_Manholes-2806	53.14	Kirkland_Manholes-2807	47.79	321.9	1.66	8	PVC	0.01	909	0	61	61	6.7	SM14-Ex-EX316	
Kirkland_Main-3068	Kirkland_Manholes-2805	68.41	Kirkland_Manholes-2806	53.14	319.8	4.78	8	PVC	0.01	1,541	0	55	55	3.5	SM14-Ex-EX316	
Kirkland_Main-3069	Kirkland_Manholes-2811	70.36	Kirkland_Manholes-2808	55.6	132.6	11.13	8	PVC	0.01	2,353	0	6	6	0.3	SM14-Ex-EX317	
Kirkland_Main-3070	Kirkland_Manholes-2814	79.68	Kirkland_Manholes-2805	68.41	70.6	15.96	8	PVC	0.01	2,817	0	6	6	0.2	SM14-Ex-EX318	
Kirkland_Main-3071	Kirkland_Manholes-2815	71.41	Kirkland_Manholes-2805	68.41	115.4	2.6	8	PVC	0.01	1,137	0	18	18	1.6	SM14-Ex-EX318	
Kirkland_Main-3072	Kirkland_Manholes-2812	81.42	Kirkland_Manholes-2815	71.41	284.3	3.52	8	PVC	0.01	1,323	0	12	12	0.9	SM14-Ex-EX318	
Kirkland_Main-3073	Kirkland_Manholes-2813	84.17	Kirkland_Manholes-2812	81.42	272.3	1.01	8	PVC	0.01	709	0	6	6	0.9	SM14-Ex-EX318	
Kirkland_Main-3074	Kirkland_Manholes-2816	45.4	Kirkland_Manholes-2810	44.75	163.3	0.4	8	PVC	0.01	446	1	6	7	1.6		
Kirkland_Main-3075	Kirkland_Manholes-2822	57.68	Kirkland_Manholes-2821	56.89	105.9	0.75	8	PVC	0.01	609	29	6	35	5.7		
Kirkland_Main-3076	Kirkland_Manholes-2821	56.89	Kirkland_Manholes-2820	55.04	95.1	1.94	8	PVC	0.01	983	30	12	42	4.3		
Kirkland_Main-3077	Kirkland_Manholes-2820	55.04	Kirkland_Manholes-2819	48.42	258.4	2.56	8	PVC	0.01	1,128	32	18	50	4.4		
Kirkland_Main-3078	Kirkland_Manholes-2819	48.42	Kirkland_Manholes-2817	44.74	95	3.87	8	PVC	0.01	1,388	32	24	57	4.1		
Kirkland_Main-3079	Kirkland_Manholes-2818	48.57	Kirkland_Manholes-2817	44.74	127	3.01	8	PVC	0.01	1,224	3	6	9	0.7		
Kirkland_Main-3080	Kirkland_Manholes-2817	44.74	Kirkland_Manholes-2823	34.33	329.7	3.16	8	PVC	0.01	1,253	35	36	72	5.7		
Kirkland_Main-3081	Kirkland_Manholes-2827	39.5	Kirkland_Manholes-2826	38.6	407	0.22	15	PVC	0.01	1,768	220	590	810	45.8	SM14-Ex-EX319	Drop Connection
Kirkland_Main-3082	Kirkland_Manholes-2826	36.35	Kirkland_Manholes-2823	34.33	324.1	0.62	15	PVC	0.01	2,973	228	596	824	27.7	SM14-Ex-EX319	
Kirkland_Main-3083	Kirkland_Manholes-2823	34.33	Kirkland_Manholes-2824	33.64	78.4	0.88	15	PVC	0.01	3,537	263	638	902	25.5	SM14-Ex-EX319	
Kirkland_Main-3084	Kirkland_Manholes-2824	33.64	Kirkland_Manholes-2825	33	93.6	0.69	15	PVC	0.01	3,124	264	645	908	29.1	SM14-Ex-EX319	
Kirkland_Main-3085	Kirkland_Manholes-2830	52.24	Kirkland_Manholes-2831	43.6	77.9	11.1	8	PVC	0.01	2,349	6	6	83	3.5		
Kirkland_Main-3088	Kirkland_Manholes-2831	43.6	Kirkland_Manholes-2829	40.2	467.6	0.73	12	PVC	0.01	1,772	152	401	625	35.3	SM14-Ex-EX309	
Kirkland_Main-3089	Kirkland_Manholes-2825	33	Kirkland_Manholes-2832	30.86	94.7	2.26	15	PVC	0.01	5,664	264	651	914	16.1	SM14-Ex-EX319	
Kirkland_Main-3090	Kirkland_Manholes-2829	40.2	Kirkland_Manholes-2832	30.86	260.5	3.59	12	PVC	0.01	3,936	152	407	631	16	SM14-Ex-EX309	
Kirkland_Main-3091	Kirkland_Manholes-2828	34.38	Kirkland_Manholes-2832	30.86	239.8	1.47	8	PVC	0.01	854	21	6	27	3.1		
Kirkland_Main-3092	Kirkland_Manholes-2832	30.86	Kirkland_Manholes-2833	29.99	303.3	0.29	18	PVC	0.01	3,283	437	1,070	1,579	48.1	SM14-Ex-EX309	
Kirkland_Main-3093	Kirkland_Manholes-2839	98.83	Kirkland_Manholes-2840	90.84	75.4	10.6	8	PVC	0.01	2,295	2	6	8	0.3		
Kirkland_Main-3094	Kirkland_Manholes-2841	31.53	Kirkland_Manholes-2842	26.9	41.3	11.2	8	PVC	0.01	2,360	4	18	22	1	SM14-Ex-EX310	
Kirkland_Main-3095	Kirkland_Manholes-2843	16.05	YARROW POINT_WETWELL	6	32.1	31.31	8	PVC	0.01	3,945	11	47	58	1.5	SM14-Ex-EX315	
Kirkland_Main-3096	Kirkland_Manholes-2847	24.39	Kirkland_Manholes-2854	20.28	103.2	3.98	8	PVC	0.01	1,407	0	5	5	0.3	SM14-Ex-EX315	
Kirkland_Main-3097	Kirkland_Manholes-2854	20.28	Kirkland_Manholes-2855	19.82	135	0.34	8	PVC	0.01	411	0	9	9	2.3	SM14-Ex-EX315	
Kirkland_Main-3098	Kirkland_Manholes-2855	19.82	Kirkland_Manholes-2846	17.72	172.2	1.22	8	PVC	0.01	779	0	14	14	1.8	SM14-Ex-EX315	
Kirkland_Main-3099	Kirkland_Manholes-2846	17.72	Kirkland_Manholes-2843	16.05	133.2	1.25	8	PVC	0.01	790	0	19	19	2.4	SM14-Ex-EX315	
Kirkland_Main-3100	Kirkland_Manholes-2845	16.72	Kirkland_Manholes-2843	16.05	68.4	0.97	8	PVC	0.01	696	11	19	30	4.3	SM14-Ex-EX315	
Kirkland_Main-3102	Kirkland_Manholes-2844	27.14	Kirkland_Manholes-2843	26.59	137.5	0.4	8	PVC	0.01	446	0	5	5	1	SM14-Ex-EX315	Drop Connection
Kirkland_Main-3104	Kirkland_Manholes-2809	42.91	Kirkland_Manholes-2834	37.62	317.9	1.66	8	PVC	0.01	910	25	97	122	13.5	SM14-Ex-EX316	
Kirkland_Main-3105	Kirkland_Manholes-2836	60.97	Kirkland_Manholes-2835	50.93	162.4	6.18	8	PVC	0.01	1,753	6	18	24	1.4		
Kirkland_Main-3106	Kirkland_Manholes-2835	50.93	Kirkland_Manholes-2834	37.62	47.5	28.02	8	PVC	0.01	3,732	6	24	31	0.8		
Kirkland_Main-3108	Kirkland_Manholes-2862	89.88	Kirkland_Manholes-2863	49.4	272.9	14.83	8	PVC	0.01	2,716	7	9	16	0.6		
Kirkland_Main-3109	Kirkland_Manholes-2861	109.7	Kirkland_Manholes-2862	89.88	239.2	8.29	8	PVC	0.01	2,030	5	6	11	0.5		
Kirkland_Main-3110	Kirkland_Manholes-2860	120.82	Kirkland_Manholes-2861	109.7	223.4	4.98	8	PVC	0.01	1,573	2	3	5	0.3		
Kirkland_Main-3115	Kirkland_Manholes-2883	268.55	Kirkland_Manholes-2876	267.92	60.1	1.05	8	PVC	0.01	722	1	8	9	1.3		
Kirkland_Main-3116	Kirkland_Manholes-2884	269.34	Kirkland_Manholes-2883	268.55	63.9	1.24	8	PVC	0.01	784	1	4	5	0.6		
Kirkland_Main-3118	Kirkland_Manholes-2548	359.75	Kirkland_Manholes-2891	359.09	165.1	0.4	8	PVC	0.01	448	8	24	32	7.2		
Kirkland_Main-3119	Kirkland_Manholes-2891	359.09	Kirkland_Manholes-2561	358.82	66.3	0.4	8	PVC	0.01	446	9	28	37	8.2		
Kirkland_Main-3121	Kirkland_Manholes-2893	432.24	Kirkland_Manholes-1991	431.18	280.1	0.38	8	PVC	0.01	434	2	4	6	1.5		
Kirkland_Main-3122	Kirkland_Manholes-2894	306.1	Kirkland_Manholes-2895	306	25.4	0.4	8	PVC	0.01	446	2	16	18	4		
Kirkland_Main-3123	Kirkland_Manholes-2895	306	Kirkland_Manholes-2896	304.88	150.3	0.75	8	PVC	0.01	609	2	20	22	3.6		
Kirkland_Main-3124	Kirkland_Manholes-2896	304.88	Kirkland_Manholes-2897	303.8	169.5	0.64	8	PVC	0.01	563	3	24	27	4.8		
Kirkland_Main-3125	Kirkland_Manholes-2898	307.58	Kirkland_Manholes-2897	303.8	40	9.44	8	PVC	0.01	2,166	1	4	5	0.2		
Kirkland_Main-3126	Kirkland_Manholes-2897	303.8	Kirkland_Manholes-2899	303.26	125.6	0.43	8	PVC	0.01	462	4	32	36	7.8		
Kirkland_Main-3127	Kirkland_Manholes-2899	303.26	Kirkland_Manholes-2900	302.3	244.9	0.39	8	PVC	0.01	441	5	36	41	9.3		
Kirkland_Main-3128	Kirkland_Manholes-882	297.25	Kirkland_Manholes-345	279.43	305.8	5.83	8	PVC	0.01	1,702	3	4	7	0.4		
Kirkland_Main-3129	Kirkland_Manholes-2901	294.77	Kirkland_Manholes-883	294.42	87	0.4	8	PVC	0.01	446	1	16	17	3.8		

Existing with Proposed Improvements - Peak Hour Flow - Pipe Capacity Table

Label	Upstream Node	Upstream Invert Elevation (ft)	Downstream Node	Downstream Invert Elevation (ft)	Length (ft)	Slope (%)	Diameter (in)	Material	Manning's n	Design Capacity (gpm)	Domestic Flow (gpm)	I/I Flow (gpm)	Total Flow (gpm)	Percent Full (%)	CIP No.	Notes
Kirkland_Main-3130	Kirkland_Manholes-883	294.42	Kirkland_Manholes-906	293.01	64.9	2.17	8	PVC	0.01	1,039	4	36	40	3.8		
Kirkland_Main-3131	Kirkland_Manholes-2902	301.02	Kirkland_Manholes-883	294.42	322.3	2.05	8	PVC	0.01	1,009	3	16	19	1.9		
Kirkland_Main-3132	Kirkland_Manholes-2903	301.35	Kirkland_Manholes-2902	301.02	151.1	0.22	8	PVC	0.01	329	2	12	14	4.4		
Kirkland_Main-3133	Kirkland_Manholes-2905	302.8	Kirkland_Manholes-2904	301.39	65.9	2.14	8	PVC	0.01	1,031	1	4	5	0.5		
Kirkland_Main-3134	Kirkland_Manholes-2904	301.39	Kirkland_Manholes-2903	301.35	153.8	0.03	8	PVC	0.01	114	1	8	9	8.1		
Kirkland_Main-3135	Kirkland_Manholes-2913	474.42	Kirkland_Manholes-1391	471.35	128.8	2.38	8	PVC	0.01	1,088	1	8	9	0.8		
Kirkland_Main-3136	Kirkland_Manholes-2906	405.37	Kirkland_Manholes-2907	402.62	299.9	0.92	8	PVC	0.01	675	1	21	22	3.3		
Kirkland_Main-3137	Kirkland_Manholes-2907	402.62	Kirkland_Manholes-2908	397.79	295.5	1.63	8	PVC	0.01	901	2	23	25	2.8		
Kirkland_Main-3138	Kirkland_Manholes-2908	397.79	Kirkland_Manholes-2532	395.91	85.9	2.19	8	PVC	0.01	1,043	2	26	27	2.6		
Kirkland_Main-3139	Kirkland_Manholes-2910	412.56	Kirkland_Manholes-2017	412	24.7	2.27	8	PVC	0.01	1,062	4	16	19	1.8		
Kirkland_Main-3140	Kirkland_Manholes-2911	414.42	Kirkland_Manholes-2910	412.56	288.8	0.64	8	PVC	0.01	566	3	12	15	2.6		
Kirkland_Main-3141	Kirkland_Manholes-2909	423.03	Kirkland_Manholes-2912	418.07	296	1.68	8	PVC	0.01	913	1	4	5	0.6		
Kirkland_Main-3142	Kirkland_Manholes-2912	418.07	Kirkland_Manholes-2911	414.42	285.6	1.28	8	PVC	0.01	797	3	8	11	1.3		
Kirkland_Main-3143	Kirkland_Manholes-2914	478.18	Kirkland_Manholes-2913	474.42	305.5	1.23	8	PVC	0.01	782	1	4	5	0.6		
Kirkland_Main-3144	Kirkland_Manholes-2036	452.58	Kirkland_Manholes-1216	443.89	347.4	2.5	8	PVC	0.01	1,115	123	318	441	39.5	SM14-Ex-EX264	
Kirkland_Main-3145	Kirkland_Manholes-1216	443.89	Kirkland_Manholes-2048	442.51	28.4	4.86	8	PVC	0.01	1,554	125	326	451	29	SM14-Ex-EX264	
Kirkland_Main-3146	Kirkland_Manholes-1719	46.02	Kirkland_Manholes-2935	44.9	241.2	0.46	8	PVC	0.01	480	71	58	128	26.7	SM14-Ex-EX165	
Kirkland_Main-3147	Kirkland_Manholes-2935	44.9	Kirkland_Manholes-1741	41.4	292.3	1.2	8	PVC	0.01	772	71	66	137	17.7	SM14-Ex-EX165	
Kirkland_Main-3150	Kirkland_Manholes-733	35.72	Kirkland_Manholes-758	27.19	290.4	2.94	18	PVC	0.01	10,503	486	1,745	2,232	21.3		
Kirkland_Main-3151	Kirkland_Manholes-758	27.19	Kirkland_Manholes-734	25.7	118.9	1.25	18	PVC	0.01	6,865	486	1,754	2,240	32.6		
Kirkland_Main-3152	Kirkland_Manholes-1689	43.75	Kirkland_Manholes-2927	38.62	107.6	4.77	8	PVC	0.01	1,540	46	103	149	9.7	SM14-Ex-EX161	
Kirkland_Main-3153	Kirkland_Manholes-2927	38.62	Kirkland_Manholes-733	35.72	20.9	13.88	8	PVC	0.01	2,627	46	111	157	6		
Kirkland_Main-3154	Kirkland_Manholes-2928	60.36	Kirkland_Manholes-730	57.26	71.9	4.31	18	PVC	0.01	12,722	141	552	692	5.4		
Kirkland_Main-3155	Kirkland_Manholes-1372	427.9	Kirkland_Manholes-2936	415.17	236.6	5.38	8	PVC	0.01	1,635	46	143	189	11.5	SM14-Ex-EX218	
Kirkland_Main-3156	Kirkland_Manholes-2936	415.17	Kirkland_Manholes-1351	415.08	21.5	0.4	8	PVC	0.01	446	52	171	223	50		Drop Connection
Kirkland_Main-3157	Kirkland_Manholes-2937	243.36	Kirkland_Manholes-2938	237.72	156	3.61	8	PVC	0.01	1,340	3	4	7	0.5		
Kirkland_Main-3158	Kirkland_Manholes-2938	237.72	Kirkland_Manholes-1313	237.26	115.6	0.4	8	PVC	0.01	446	3	9	12	2.7		Drop Connection
Kirkland_Main-3159	Kirkland_Manholes-2939	317.33	Kirkland_Manholes-2887	302.33	186.7	8.03	8	PVC	0.01	1,999	2	12	14	0.7		
Kirkland_Main-3161	Kirkland_Manholes-2940	472.26	Kirkland_Manholes-564	469.28	203.6	1.46	8	PVC	0.01	853	0	4	4	0.5		
Kirkland_Main-3162	Kirkland_Manholes-2943	249.65	Kirkland_Manholes-1876	247.77	195.1	0.96	8	PVC	0.01	692	0	8	8	1.1		
Kirkland_Main-3163	Kirkland_Manholes-2947	393.38	Kirkland_Manholes-2946	380.26	237.2	5.53	8	PVC	0.01	1,658	1	4	5	0.3		
Kirkland_Main-3164	Kirkland_Manholes-2946	380.26	Kirkland_Manholes-2945	367.86	240.8	5.15	8	PVC	0.01	1,600	6	20	26	1.6		
Kirkland_Main-3165	Kirkland_Manholes-2945	367.86	Kirkland_Manholes-2948	345.5	368	6.08	8	PVC	0.01	1,738	6	24	30	1.7		
Kirkland_Main-3166	Kirkland_Manholes-2948	345.5	Kirkland_Manholes-1933	343.68	135.8	1.34	8	PVC	0.01	816	6	28	34	4.2		
Kirkland_Main-3167	Kirkland_Manholes-2171	166.42	Kirkland_Manholes-1107	164.79	299.5	0.54	8	PVC	0.01	520	0	4	4	0.8	SM14-Ex-EX21	
Kirkland_Main-3168	Kirkland_Manholes-2942	127.29	Kirkland_Manholes-2941	110.18	161.6	10.59	8	PVC	0.01	2,294	2	4	6	0.3		
Kirkland_Main-3169	Kirkland_Manholes-80	110.33	Kirkland_Manholes-2941	110.18	10	1.51	8	PVC	0.01	866	3	4	7	0.8		
Kirkland_Main-3170	Kirkland_Manholes-2941	110.18	Kirkland_Manholes-144	88.96	389.8	5.44	8	PVC	0.01	1,645	4	13	17	1		
Kirkland_Main-3171	Kirkland_Manholes-2949	387.42	Kirkland_Manholes-2946	380.26	393.8	1.82	8	PVC	0.01	951	4	12	15	1.6		
Kirkland_Main-3172	Kirkland_Manholes-2950	396.31	Kirkland_Manholes-2949	387.42	98.6	9.02	8	PVC	0.01	2,117	3	8	11	0.5		
Kirkland_Main-3173	Kirkland_Manholes-2951	398.98	Kirkland_Manholes-2950	396.31	142	1.88	8	PVC	0.01	967	1	4	5	0.5		
Kirkland_Main-3174	Kirkland_Manholes-2952	137.34	Kirkland_Manholes-2509	126.48	113.7	9.55	8	PVC	0.01	2,179	1	6	8	0.3		
Kirkland_Main-3175	Kirkland_Manholes-1035	182.7	Kirkland_Manholes-2955	181.46	188.6	0.66	8	PVC	0.01	572	13	51	64	11.2		
Kirkland_Main-3176	Kirkland_Manholes-2955	181.46	Kirkland_Manholes-1038	180.54	146.6	0.63	8	PVC	0.01	559	17	64	81	14.5		
Kirkland_Main-3177	Kirkland_Manholes-2954	183.8	Kirkland_Manholes-2953	182.9	158.6	0.57	8	PVC	0.01	531	1	4	5	1		
Kirkland_Main-3178	Kirkland_Manholes-2953	182.9	Kirkland_Manholes-2955	181.46	297.7	0.48	8	PVC	0.01	490	3	9	12	2.4		
Kirkland_Main-3179	Kirkland_Manholes-2956	306.62	Kirkland_Manholes-876	301.25	262.2	2.05	8	PVC	0.01	1,009	1	16	17	1.7		
Kirkland_Main-3180	Kirkland_Manholes-2958	17.19	WAVERLY_WETWELL	0	45.5	37.82	12	PVC	0.01	12,784	38	283	321	2.5		WW Influent Pipe
Kirkland_Main-3181	Kirkland_Manholes-1622	253.11	Kirkland_Manholes-528	238.38	149.4	9.86	8	PVC	0.01	2,214	213	834	1,048	47.3	SM7	
Kirkland_Main-3182	Kirkland_Manholes-528	238.38	Kirkland_Manholes-1634	223.49	152.1	9.79	8	PVC	0.01	2,206	216	838	1,054	47.8	SM7	
Kirkland_Main-3183	Kirkland_Manholes-2971	508.46	Kirkland_Manholes-2972	508.32	249.3	0.06	8	PVC	0.01	167	0	4	4	2.4		
Kirkland_Main-3185	Kirkland_Manholes-2960	235.09	Kirkland_Manholes-334	218.68	321.1	5.11	8	PVC	0.01	1,594	2	4	6	0.4		
Kirkland_Main-3186	Kirkland_Manholes-2961	466.63	Kirkland_Manholes-2030	465.11	267.6	0.57	8	PVC	0.01	531	1	4	5	0.9		
Kirkland_Main-3187	Kirkland_Manholes-2963	352.22	Kirkland_Manholes-2962	351.81	165.5	0.25	8	PVC	0.01	351	1	4	5	1.4		
Kirkland_Main-3188	Kirkland_Manholes-2962	351.81	Kirkland_Manholes-2566	326.34	167.8	15.18	8	PVC	0.01	2,747	4	20	23	0.9		
Kirkland_Main-3189	Kirkland_Manholes-2966	369.29	Kirkland_Manholes-2965	368.34	79.6	1.19	8	PVC	0.01	770	10	4	14	1.8		
Kirkland_Main-3190	Kirkland_Manholes-2965	368.34	Kirkland_Manholes-2964	368.18	12	1.33	8	PVC	0.01	814	15	8	22	2.8		
Kirkland_Main-3191	Kirkland_Manholes-2964	368.18	Kirkland_Manholes-1916	361.73	249.5	2.59	8	PVC	0.01	1,134	15	12	27	2.4		
Kirkland_Main-3193	Kirkland_Manholes-2967	87.15	Kirkland_Manholes-2969	78.32	80.7	10.94	8	PVC	0.01	2,332	1	4	5	0.2		
Kirkland_Main-3194	Kirkland_Manholes-2968	78.98	Kirkland_Manholes-2969	78.32	100.1	0.66	8	PVC	0.01	573	1	4	6	1		
Kirkland_Main-3195	Kirkland_Manholes-2969	78.32	Kirkland_Manholes-2970	61.2	152.9	11.2	8	PVC	0.01	2,359	3	13	16	0.7		
Kirkland_Main-3196	Kirkland_Manholes-2970	61.2	Kirkland_Manholes-200	55.31	178.6	3.3	8	PVC	0.01	1,280	4	17	21	1.6		

Existing with Proposed Improvements - Peak Hour Flow - Pipe Capacity Table

Label	Upstream Node	Upstream Invert Elevation (ft)	Downstream Node	Downstream Invert Elevation (ft)	Length (ft)	Slope (%)	Diameter (in)	Material	Manning's n	Design Capacity (gpm)	Domestic Flow (gpm)	I/I Flow (gpm)	Total Flow (gpm)	Percent Full (%)	CIP No.	Notes
Kirkland_Main-3197	Kirkland_Manholes-1445	504.92	Kirkland_Manholes-2976	503.85	186.4	0.57	8	PVC	0.01	534	16	91	108	20.2	SM14-Ex-EX269	
Kirkland_Main-3198	Kirkland_Manholes-2972	508.32	Kirkland_Manholes-2973	507.01	144.1	0.91	8	PVC	0.01	672	0	8	8	1.2		
Kirkland_Main-3199	Kirkland_Manholes-2974	507.07	Kirkland_Manholes-2973	507.01	168.1	0.04	8	PVC	0.01	133	0	4	4	3		
Kirkland_Main-3200	Kirkland_Manholes-2973	507.01	Kirkland_Manholes-2975	506.8	151.1	0.14	8	PVC	0.01	263	1	16	17	6.6		
Kirkland_Main-3201	Kirkland_Manholes-2975	506.8	Kirkland_Manholes-2976	503.85	22	13.39	8	PVC	0.01	2,579	1	20	21	0.8		
Kirkland_Main-3202	Kirkland_Manholes-2978	14.63	Kirkland_Manholes-2730	14.43	56	0.36	18	PVC	0.01	3,662	224	565	789	21.5	SM14-Ex-EX289	
Kirkland_Main-3203	Kirkland_Manholes-2977	14.89	Kirkland_Manholes-2978	14.63	69.2	0.38	18	PVC	0.01	3,758	223	559	782	20.8	SM14-Ex-EX289	
Kirkland_Main-3204	Kirkland_Manholes-2979	372.62	Kirkland_Manholes-2980	359.59	69.3	18.82	8	PVC	0.01	3,058	1	4	5	0.2		
Kirkland_Main-3205	Kirkland_Manholes-2980	359.59	Kirkland_Manholes-2981	355.43	97.4	4.27	8	PVC	0.01	1,457	2	8	10	0.7		
Kirkland_Main-3206	Kirkland_Manholes-2981	355.43	Kirkland_Manholes-2962	351.81	43.7	8.28	8	PVC	0.01	2,029	3	12	14	0.7		
Kirkland_Main-3207	Kirkland_Manholes-2982	168	Kirkland_Manholes-770	166.93	80.1	1.34	8	PVC	0.01	815	0	4	4	0.5		
Kirkland_Main-3208	Kirkland_Manholes-2983	235.2	Kirkland_Manholes-974	234.1	148.8	0.74	8	PVC	0.01	606	1	4	5	0.9		
Kirkland_Main-3209	Kirkland_Manholes-1342	283.15	Kirkland_Manholes-2984	277.63	191.2	2.89	10	PVC	0.01	2,172	106	370	475	21.9		
Kirkland_Main-3210	Kirkland_Manholes-2985	155.7	Kirkland_Manholes-1648	152.03	36.5	10.07	8	PVC	0.01	2,237	3	16	19	0.9		
Kirkland_Main-3211	Kirkland_Manholes-2986	155.86	Kirkland_Manholes-2985	155.7	122.4	0.13	8	PVC	0.01	255	3	8	11	4.3		
Kirkland_Main-3213	Kirkland_Manholes-2987	213	Kirkland_Manholes-2988	212.12	123.5	0.71	8	PVC	0.01	595	3	4	8	1.3		
Kirkland_Main-3214	Kirkland_Manholes-2988	212.12	Kirkland_Manholes-2989	210.69	118.1	1.21	8	PVC	0.01	776	5	9	13	1.7		
Kirkland_Main-3215	Kirkland_Manholes-2989	210.69	Kirkland_Manholes-61	205.17	54.3	10.16	8	PVC	0.01	2,247	5	13	18	0.8		
Kirkland_Main-3216	Kirkland_Manholes-2990	239.73	Kirkland_Manholes-1021	230.72	366.4	2.46	8	PVC	0.01	1,106	2	4	7	0.6		
Kirkland_Main-3217	Kirkland_Manholes-2993	335.98	Kirkland_Manholes-2939	317.33	213.5	8.74	8	PVC	0.01	2,084	2	8	10	0.5		
Kirkland_Main-3218	Kirkland_Manholes-1083	220.88	Kirkland_Manholes-2996	220.63	31.5	0.79	12	PVC	0.01	1,851	130	501	806	43.6	SM14-Ex-EX321	
Kirkland_Main-3219	Kirkland_Manholes-2995	224.98	Kirkland_Manholes-2996	220.63	134.4	3.24	8	PVC	0.01	1,269	9	4	13	1		
Kirkland_Main-3220	Kirkland_Manholes-2997	482.7	Kirkland_Manholes-2998	482.02	242.2	0.28	8	PVC	0.01	374	0	4	4	1.2		
Kirkland_Main-3221	Kirkland_Manholes-2998	482.02	Kirkland_Manholes-555	477.96	81.6	4.97	8	PVC	0.01	1,572	1	8	9	0.6		
Kirkland_Main-3222	Kirkland_Manholes-2999	479.74	Kirkland_Manholes-3000	475.69	102.7	3.94	8	PVC	0.01	1,400	1	4	5	0.3		
Kirkland_Main-3223	Kirkland_Manholes-3000	475.69	Kirkland_Manholes-3001	471.99	137.1	2.7	8	PVC	0.01	1,158	1	8	9	0.8		
Kirkland_Main-3224	Kirkland_Manholes-3001	471.99	Kirkland_Manholes-3002	466.73	134.5	3.91	8	PVC	0.01	1,394	1	12	13	0.9		
Kirkland_Main-3225	Kirkland_Manholes-3002	466.73	Kirkland_Manholes-3003	466.06	37	1.81	8	PVC	0.01	949	1	16	17	1.8		
Kirkland_Main-3226	Kirkland_Manholes-3003	466.06	Kirkland_Manholes-3004	465.24	79.1	1.04	8	PVC	0.01	718	1	20	21	2.9		
Kirkland_Main-3227	Kirkland_Manholes-3004	465.24	Kirkland_Manholes-3005	459.83	119.2	4.54	8	PVC	0.01	1,502	2	24	26	1.7		
Kirkland_Main-3228	Kirkland_Manholes-3005	459.83	Kirkland_Manholes-3006	456.1	91.8	4.07	8	PVC	0.01	1,422	2	28	30	2.1		
Kirkland_Main-3229	Kirkland_Manholes-3007	456.9	Kirkland_Manholes-3008	447.1	310.3	3.16	8	PVC	0.01	1,253	2	8	10	0.8		
Kirkland_Main-3230	Kirkland_Manholes-3009	452.69	Kirkland_Manholes-3008	447.1	238.1	2.35	8	PVC	0.01	1,080	0	4	4	0.4		
Kirkland_Main-3231	Kirkland_Manholes-3008	447.1	Kirkland_Manholes-1990	439.8	282	2.59	8	PVC	0.01	1,134	2	16	18	1.6		
Kirkland_Main-3232	Kirkland_Manholes-3010	442.64	Kirkland_Manholes-3011	434.12	219.9	3.87	8	PVC	0.01	1,388	0	4	4	0.3		
Kirkland_Main-3233	Kirkland_Manholes-3011	434.12	Kirkland_Manholes-2005	431.24	367.7	0.78	8	PVC	0.01	624	1	8	9	1.4		
Kirkland_Main-3234	Kirkland_Manholes-2005	431.24	Kirkland_Manholes-2006	430.4	270.9	0.31	8	PVC	0.01	393	1	12	13	3.4		
Kirkland_Main-3235	Kirkland_Manholes-2006	430.4	Kirkland_Manholes-2007	429.08	284.1	0.46	8	PVC	0.01	481	3	16	19	3.9		
Kirkland_Main-3236	Kirkland_Manholes-3012	424.86	Kirkland_Manholes-2011	417.75	388.4	1.83	8	PVC	0.01	954	1	4	5	0.5		
Kirkland_Main-3237	Kirkland_Manholes-3014	470	Kirkland_Manholes-3013	459.93	193.2	5.21	8	PVC	0.01	1,610	1	4	5	0.3		
Kirkland_Main-3238	Kirkland_Manholes-3013	459.93	Kirkland_Manholes-548	453.36	230.6	2.85	8	PVC	0.01	1,190	2	8	10	0.8		
Kirkland_Main-3239	Kirkland_Manholes-3020	302.86	Kirkland_Manholes-1341	299.38	98.7	3.52	8	PVC	0.01	1,324	5	48	53	4		
Kirkland_Main-3240	Kirkland_Manholes-3019	303.35	Kirkland_Manholes-3020	302.86	19.4	2.52	8	PVC	0.01	1,119	5	44	49	4.4		
Kirkland_Main-3241	Kirkland_Manholes-3021	303.74	Kirkland_Manholes-3019	303.35	54.4	0.72	8	PVC	0.01	597	5	40	45	7.5		
Kirkland_Main-3242	Kirkland_Manholes-3022	311.69	Kirkland_Manholes-3021	303.74	55.5	14.32	8	PVC	0.01	2,668	0	4	4	0.2		
Kirkland_Main-3243	Kirkland_Manholes-3023	312.84	Kirkland_Manholes-3021	303.74	71.1	12.8	8	PVC	0.01	2,523	5	32	37	1.5		
Kirkland_Main-3244	Kirkland_Manholes-3018	329.19	Kirkland_Manholes-3023	312.84	105.9	15.45	8	PVC	0.01	2,771	5	28	33	1.2		
Kirkland_Main-3245	Kirkland_Manholes-3017	343.42	Kirkland_Manholes-3018	329.19	180.7	7.87	8	PVC	0.01	1,978	4	24	28	1.4		
Kirkland_Main-3246	Kirkland_Manholes-3015	371.23	Kirkland_Manholes-3017	343.42	160.4	17.33	8	PVC	0.01	2,935	3	20	23	0.8		
Kirkland_Main-3247	Kirkland_Manholes-3016	372.66	Kirkland_Manholes-3015	371.23	122.5	1.17	8	PVC	0.01	762	3	16	19	2.4		
Kirkland_Main-3248	Kirkland_Manholes-3024	372.77	Kirkland_Manholes-1930	369.31	206.2	1.68	8	PVC	0.01	913	1	4	5	0.6		
Kirkland_Main-3250	Kirkland_Manholes-3025	189.5	Kirkland_Manholes-3026	186.45	198.2	1.54	8	PVC	0.01	875	0	4	5	0.5		
Kirkland_Main-3251	Kirkland_Manholes-3026	186.45	Kirkland_Manholes-1035	182.7	331	1.13	8	PVC	0.01	750	1	9	10	1.3		
Kirkland_Main-3252	Kirkland_Manholes-3028	332.75	Kirkland_Manholes-1582	332.21	111.6	0.48	12	PVC	0.01	1,446	39	179	217	15	SM14-Ex-EX206	
Kirkland_Main-3253	Kirkland_Manholes-3027	333.49	Kirkland_Manholes-3028	332.75	24.2	3.06	8	PVC	0.01	1,233	1	4	5	0.4		
Kirkland_Main-3257	Kirkland_Manholes-3031	384.74	Kirkland_Manholes-1926	383.42	23.1	5.72	12	PVC	0.01	4,970	123	524	647	13		
Kirkland_Main-3258	Kirkland_Manholes-1	73.25	Kirkland_Manholes-21	62.08	92.5	12.08	8	PVC	0.01	2,451	7	21	28	1.2		
Kirkland_Main-3259	Kirkland_Manholes-20	65.72	Kirkland_Manholes-21	62.08	153.9	2.36	8	PVC	0.01	1,084	0	4	4	0.4		
Kirkland_Main-3260	Kirkland_Manholes-3070	330.73	Kirkland_Manholes-927	307.71	144.8	15.9	8	PVC	0.01	2,811	6	4	10	0.4		
Kirkland_Main-3261	Kirkland_Manholes-3078	370.92	Kirkland_Manholes-3077	366.14	136.6	3.5	8	PVC	0.01	1,319	0	4	4	0.3		
Kirkland_Main-3262	Kirkland_Manholes-3077	366.14	Kirkland_Manholes-3076	363.7	26.9	9.07	8	PVC	0.01	2,124	0	8	8	0.4		
Kirkland_Main-3263	Kirkland_Manholes-3076	363.7	Kirkland_Manholes-3075	343.97	114.4	17.24	8	PVC	0.01	2,928	0	12	12	0.4		

Existing with Proposed Improvements - Peak Hour Flow - Pipe Capacity Table

Label	Upstream Node	Upstream Invert Elevation (ft)	Downstream Node	Downstream Invert Elevation (ft)	Length (ft)	Slope (%)	Diameter (in)	Material	Manning's n	Design Capacity (gpm)	Domestic Flow (gpm)	I/I Flow (gpm)	Total Flow (gpm)	Percent Full (%)	CIP No.	Notes
Kirkland_Main-3264	Kirkland_Manholes-3075	343.97	Kirkland_Manholes-3079	316.42	161.6	17.05	8	PVC	0.01	2,911	1	16	17	0.6		
Kirkland_Main-3265	Kirkland_Manholes-3079	316.42	Kirkland_Manholes-3074	303.68	195.1	6.53	8	PVC	0.01	1,802	1	20	21	1.2		
Kirkland_Main-3266	Kirkland_Manholes-3074	303.68	Kirkland_Manholes-3073	289.21	131.6	10.99	8	PVC	0.01	2,337	1	24	25	1.1		
Kirkland_Main-3267	Kirkland_Manholes-3073	289.21	Kirkland_Manholes-3072	273.11	354	4.55	8	PVC	0.01	1,504	1	28	29	1.9		
Kirkland_Main-3268	Kirkland_Manholes-3072	273.11	Kirkland_Manholes-3071	273.04	17.1	0.4	8	PVC	0.01	445	1	32	33	7.5		
Kirkland_Main-3269	Kirkland_Manholes-3071	273.04	Kirkland_Manholes-1317	271.64	20.2	6.94	8	PVC	0.01	1,858	1	36	37	2		
Kirkland_Main-3270	Kirkland_Manholes-3081	373.55	Kirkland_Manholes-1319	372.4	30.4	3.78	8	PVC	0.01	1,371	65	187	252	18.4		
Kirkland_Main-3271	Kirkland_Manholes-3080	382.34	Kirkland_Manholes-3081	377.27	187.3	2.71	8	PVC	0.01	1,160	0	4	4	0.3		Drop Connection
Kirkland_Main-3272	Kirkland_Manholes-3083	435.32	Kirkland_Manholes-3082	428.49	311.8	2.19	8	PVC	0.01	1,044	1	4	5	0.5		
Kirkland_Main-3273	Kirkland_Manholes-3084	333.87	Kirkland_Manholes-3085	329.83	142	2.85	8	PVC	0.01	1,189	0	4	4	0.3		
Kirkland_Main-3274	Kirkland_Manholes-3085	329.83	Kirkland_Manholes-3086	304.85	242	10.32	12	PVC	0.01	6,678	1	8	8	0.1		
Kirkland_Main-3275	Kirkland_Manholes-3086	304.85	Kirkland_Manholes-3087	296.66	149.5	5.48	12	PVC	0.01	4,865	3	12	15	0.3		
Kirkland_Main-3276	Kirkland_Manholes-3087	296.66	Kirkland_Manholes-3088	288.51	213.4	3.82	8	Concrete	0.013	1,060	3	16	19	1.8		
Kirkland_Main-3277	Kirkland_Manholes-3088	288.51	Kirkland_Manholes-3089	268.55	207	9.64	8	Concrete	0.013	1,684	3	20	23	1.4		
Kirkland_Main-3278	Kirkland_Manholes-3089	268.55	Kirkland_Manholes-2427	267.5	263	0.4	8	Concrete	0.013	343	51	24	74	21.7		
Kirkland_Main-3279	Kirkland_Manholes-2197	480.89	Kirkland_Manholes-1417	477.64	213.1	1.52	8	PVC	0.01	871	2	12	14	1.6		
Kirkland_Main-3280	Kirkland_Manholes-3090	416.74	Kirkland_Manholes-2916	416.17	246	0.23	8	PVC	0.01	339	1	4	5	1.6		
Kirkland_Main-3281	Kirkland_Manholes-3092	96.93	Kirkland_Manholes-173	34.1	219.6	28.61	8	PVC	0.01	3,771	2	9	10	0.3		
Kirkland_Main-3282	Kirkland_Manholes-3091	115.12	Kirkland_Manholes-3092	96.93	129.4	14.06	8	PVC	0.01	2,644	1	4	5	0.2		
Kirkland_Main-3283	Kirkland_Manholes-3093	117.97	Kirkland_Manholes-3094	63.71	388.1	13.98	8	PVC	0.01	2,636	2	4	6	0.2		
Kirkland_Main-3284	Kirkland_Manholes-3094	63.71	Kirkland_Manholes-437	58.56	159.5	3.23	8	PVC	0.01	1,267	4	9	13	1		
Kirkland_Main-3285	Kirkland_Manholes-3095	195.85	Kirkland_Manholes-2070	185.96	195.6	5.06	8	PVC	0.01	1,585	1	4	5	0.3		
Kirkland_Main-3287	Kirkland_Manholes-205	228.15	Kirkland_Manholes-3096	204.91	232.4	10	8	PVC	0.01	2,229	14	34	48	2.2	SM14-Ex-EX57	
Kirkland_Main-3288	Kirkland_Manholes-3096	204.91	Kirkland_Manholes-234	184.45	273.4	7.48	8	PVC	0.01	1,929	19	47	66	3.4	SM14-Ex-EX57	
Kirkland_Main-3289	Kirkland_Manholes-1218	220.85	Kirkland_Manholes-3096	204.91	278.6	5.72	8	PVC	0.01	1,686	4	9	13	0.7	SM14-Ex-EX59	
Kirkland_Main-3290	Kirkland_Manholes-3097	172.14	Kirkland_Manholes-1639	169.94	87.4	2.52	8	PVC	0.01	1,119	14	83	97	8.7	SM14-Ex-EX202	
Kirkland_Main-3291	Kirkland_Manholes-3098	172.34	Kirkland_Manholes-3097	172.14	17.4	1.15	8	PVC	0.01	757	13	79	93	12.3	SM14-Ex-EX202	
Kirkland_Main-3292	Kirkland_Manholes-1640	188.59	Kirkland_Manholes-3098	174.29	160.1	8.93	8	PVC	0.01	2,107	3	8	11	0.5	SM14-Ex-EX203	Drop Connection
Kirkland_Main-3293	Kirkland_Manholes-2696	172.94	Kirkland_Manholes-3098	172.34	33	1.82	8	PVC	0.01	951	10	68	78	8.2	SM14-Ex-EX202	
Kirkland_Main-3294	Kirkland_Manholes-3099	77.83	Kirkland_Manholes-2204	53	99.4	24.97	8	PVC	0.01	3,523	3	12	15	0.4		
Kirkland_Main-3295	Kirkland_Manholes-2725	97.33	Kirkland_Manholes-3099	77.83	158.8	12.28	8	PVC	0.01	2,470	1	6	8	0.3		
Kirkland_Main-3296	Kirkland_Manholes-2663	50.64	Kirkland_Manholes-3043	37.72	98.7	13.08	12	PVC	0.01	7,519	124	437	561	7.5		
Kirkland_Main-3297	Kirkland_Manholes-3043	37.72	Kirkland_Manholes-3044	18.06	181	10.86	12	PVC	0.01	6,850	124	443	567	8.3		
Kirkland_Main-3298	Kirkland_Manholes-3106	117	Kirkland_Manholes-3105	116.05	61.3	1.55	8	PVC	0.01	877	14	91	105	12	SM10	
Kirkland_Main-3299	Kirkland_Manholes-3107	127.14	Kirkland_Manholes-3106	117	167.2	6.07	8		0.012	1,447	14	82	96	6.6	SM10	
Kirkland_Main-3300	Kirkland_Manholes-1180	118.31	Kirkland_Manholes-3108	104.6	196.1	6.99	8	PVC	0.01	1,864	1	8	9	0.5	SM10	
Kirkland_Main-3301	Kirkland_Manholes-3103	113.84	Kirkland_Manholes-3109	110.43	345.5	0.99	12	PVC	0.01	2,065	17	123	141	6.8	SM10	
Kirkland_Main-3302	Kirkland_Manholes-3109	110.43	Kirkland_Manholes-3108	104.6	85.9	6.79	8	PVC	0.01	1,837	18	132	150	8.1	SM10	
Kirkland_Main-3303	Kirkland_Manholes-3108	104.6	Kirkland_Manholes-513	81.7	198.3	11.55	8	PVC	0.01	2,396	19	148	167	7	SM10	
Kirkland_Main-3305	Kirkland_Manholes-3105	116.05	Kirkland_Manholes-3104	114.41	128.6	1.28	8	PVC	0.01	796	15	99	114	14.4	SM10	
Kirkland_Main-3306	Kirkland_Manholes-3110	73.01	Kirkland_Manholes-306	19.99	234	22.66	8	PVC	0.01	3,356	22	106	128	3.8	SM10	
Kirkland_Main-3307	Kirkland_Manholes-305	74.69	Kirkland_Manholes-3110	73.01	8.3	20.21	8	PVC	0.01	3,169	21	97	118	3.7	SM10	
Kirkland_Main-3308	Kirkland_Manholes-3114	174.9	Kirkland_Manholes-3113	173.48	159.7	0.89	8	PVC	0.01	665	32	4	36	5.4		
Kirkland_Main-3309	Kirkland_Manholes-3113	173.48	Kirkland_Manholes-3112	173.15	82.5	0.4	8	PVC	0.01	446	32	8	40	8.9		
Kirkland_Main-3310	Kirkland_Manholes-3112	173.15	Kirkland_Manholes-3111	170.05	248.7	1.25	8	PVC	0.01	787	32	12	44	5.6		
Kirkland_Main-3311	Kirkland_Manholes-3111	170.05	Kirkland_Manholes-1125	167.88	64.7	3.36	8	PVC	0.01	1,292	32	16	48	3.7		
Kirkland_Main-3314	Kirkland_Manholes-3116	330.46	Kirkland_Manholes-2933	328.79	108.5	1.54	8	PVC	0.01	875	1	4	5	0.5		
Kirkland_Main-3315	Kirkland_Manholes-3117	134.38	Kirkland_Manholes-161	132.09	173.7	1.32	8	PVC	0.01	809	2	4	6	0.7		
Kirkland_Main-3316	Kirkland_Manholes-3118	331.75	Kirkland_Manholes-2934	330.48	196.7	0.65	8	PVC	0.01	567	0	4	4	0.8		
Kirkland_Main-3317	Kirkland_Manholes-3119	327.7	Kirkland_Manholes-2932	327.56	161.9	0.09	8	PVC	0.01	207	2	20	22	10.7		
Kirkland_Main-3318	Kirkland_Manholes-2933	328.79	Kirkland_Manholes-3119	327.7	135.5	0.8	8	PVC	0.01	632	1	8	9	1.5		
Kirkland_Main-3319	Kirkland_Manholes-2934	330.48	Kirkland_Manholes-3119	327.7	250.4	1.11	8	PVC	0.01	743	1	8	9	1.2		
Kirkland_Main-3320	Kirkland_Manholes-839	334.68	Kirkland_Manholes-3121	329.59	187.8	2.71	8	PVC	0.01	1,161	14	40	54	4.6		
Kirkland_Main-3321	Kirkland_Manholes-3120	345	Kirkland_Manholes-3121	344.79	53.6	0.4	8	PVC	0.01	446	1	4	5	1.1		Drop Connection
Kirkland_Main-3322	Kirkland_Manholes-3121	329.59	Kirkland_Manholes-3122	329.14	65.3	0.69	8	PVC	0.01	585	15	48	62	10.7		
Kirkland_Main-3323	Kirkland_Manholes-3122	329.14	Kirkland_Manholes-840	326.85	337.3	0.68	8	PVC	0.01	581	17	52	69	11.8		
Kirkland_Main-3326	Kirkland_Manholes-3123	227.69	Kirkland_Manholes-2497	194.88	329.5	9.96	8	PVC	0.01	2,225	7	4	11	0.5	SM14-Ex-EX236	
Kirkland_Main-3332	Kirkland_Manholes-3125	215.03	Kirkland_Manholes-3124	203.5	175.2	6.58	8	PVC	0.01	1,809	1	4	5	0.3	SM14-Ex-EX20	
Kirkland_Main-3333	Kirkland_Manholes-3124	203.5	Kirkland_Manholes-3126	177.5	261.8	9.93	8	PVC	0.01	2,222	2	9	10	0.5	SM14-Ex-EX20	
Kirkland_Main-3336	Kirkland_Manholes-3006	456.1	Kirkland_Manholes-539	454.38	165.4	1.04	8	PVC	0.01	719	3	32	34	4.8		
Kirkland_Main-3337	Kirkland_Manholes-555	477.96	Kirkland_Manholes-535	472.49	159.7	3.43	8	PVC	0.01	1,305	2	12	14	1.1		
Kirkland_Main-3338	Kirkland_Manholes-2509	126.48	Kirkland_Manholes-2508	120.01	60.3	10.73	8	PVC	0.01	2,309	2	12	15	0.6	SM14-Ex-EX229	

Existing with Proposed Improvements - Peak Hour Flow - Pipe Capacity Table

Label	Upstream Node	Upstream Invert Elevation (ft)	Downstream Node	Downstream Invert Elevation (ft)	Length (ft)	Slope (%)	Diameter (in)	Material	Manning's n	Design Capacity (gpm)	Domestic Flow (gpm)	I/I Flow (gpm)	Total Flow (gpm)	Percent Full (%)	CIP No.	Notes
Kirkland_Main-3339	Kirkland_Manholes-2566	326.34	Kirkland_Manholes-2567	316.05	133.4	7.71	8	PVC	0.01	1,958	4	24	28	1.4	SM14-Ex-EX307	
Kirkland_Main-3340	Kirkland_Manholes-728	70.86	Kirkland_Manholes-2928	60.36	293.8	3.57	18	PVC	0.01	11,586	112	543	656	5.7		
Kirkland_Main-3341	Kirkland_Manholes-3127	324.33	Kirkland_Manholes-3128	323.94	81.4	0.48	8	PVC	0.01	488	0	4	4	0.8	SM14-Ex-EX54	
Kirkland_Main-3344	Kirkland_Manholes-3129	308.71	Kirkland_Manholes-2956	306.62	67.6	3.09	8	PVC	0.01	1,240	1	12	13	1		
Kirkland_Main-3345	Kirkland_Manholes-3130	70.51	Kirkland_Manholes-3131	61.63	403.3	2.2	8	PVC	0.01	1,046	0	4	4	0.4		
Kirkland_Main-3346	Kirkland_Manholes-3131	61.63	Kirkland_Manholes-201	56.98	404.6	1.15	8	PVC	0.01	756	0	9	9	1.1		
Kirkland_Main-3347	Kirkland_Manholes-3132	514.05	Kirkland_Manholes-3133	512.61	110	1.31	8	PVC	0.01	807	0	4	4	0.5		
Kirkland_Main-3348	Kirkland_Manholes-3133	512.61	Kirkland_Manholes-1441	509.69	156.4	1.87	8	PVC	0.01	963	0	8	8	0.9		
Kirkland_Main-3349	Kirkland_Manholes-3134	66.29	Kirkland_Manholes-1828	65.79	294	0.17	15	PVC	0.01	1,554	100	683	1,134	73	SM14-2035-DF11	
Kirkland_Main-3350	Kirkland_Manholes-2994	67.86	Kirkland_Manholes-3135	66.49	13.6	10.06	15	PVC	0.01	11,957	99	667	1,116	9.3		
Kirkland_Main-3351	Kirkland_Manholes-3135	66.49	Kirkland_Manholes-3134	66.29	136.2	0.15	15	PVC	0.01	1,460	99	675	1,125	77	SM14-2035-DF11	
Kirkland_Main-3353	Kirkland_Manholes-3137	192.8	Kirkland_Manholes-1304	180.12	128.3	9.88	8	PVC	0.01	2,216	4	16	21	0.9	SM14-Ex-EX106	
Kirkland_Main-3354	Kirkland_Manholes-1305	222.35	Kirkland_Manholes-3137	192.8	245.9	12.02	8	PVC	0.01	2,444	3	8	11	0.5	SM14-Ex-EX106	
Kirkland_Main-3356	Kirkland_Manholes-3138	280.24	Kirkland_Manholes-672	266.2	264	5.32	8	PVC	0.01	1,626	0	4	4	0.2		
Kirkland_Main-3357	Kirkland_Manholes-3139	191.69	Kirkland_Manholes-769	165.1	236	11.27	8	PVC	0.01	2,367	2	4	6	0.2		
Kirkland_Main-3358	Kirkland_Manholes-3140	184.54	Kirkland_Manholes-520	182.65	320.9	0.59	8	PVC	0.01	541	2	8	10	1.9	SM10	
Kirkland_Main-3359	Kirkland_Manholes-526	148.56	Kirkland_Manholes-3141	141.49	317.3	2.23	8	PVC	0.01	1,052	4	33	37	3.6	SM10	
Kirkland_Main-3360	Kirkland_Manholes-3141	141.49	Kirkland_Manholes-3107	127.14	314.8	4.56	8	PVC	0.01	1,505	11	66	77	5.1	SM10	
Kirkland_Main-3361	Kirkland_Manholes-495	169.48	Kirkland_Manholes-3142	153.62	319.4	4.97	8	PVC	0.01	1,571	4	16	20	1.3	SM10	
Kirkland_Main-3362	Kirkland_Manholes-3142	153.62	Kirkland_Manholes-3141	141.49	269.1	4.51	8	PVC	0.01	1,497	6	25	30	2	SM10	
Kirkland_Main-3366	Kirkland_Manholes-3148	304.94	Kirkland_Manholes-3147	292.59	197.5	6.25	8	PVC	0.01	1,763	1	4	5	0.3		
Kirkland_Main-3367	Kirkland_Manholes-3147	292.59	Kirkland_Manholes-3146	290.48	68.4	3.08	8	PVC	0.01	1,238	1	8	9	0.7		
Kirkland_Main-3368	Kirkland_Manholes-3146	290.48	Kirkland_Manholes-3145	283.25	74.7	9.68	8	PVC	0.01	2,194	1	12	13	0.6		
Kirkland_Main-3369	Kirkland_Manholes-3149	279.32	Kirkland_Manholes-672	266.2	331.7	3.96	8	PVC	0.01	1,402	5	48	53	3.8		
Kirkland_Main-3370	Kirkland_Manholes-2888	290.53	Kirkland_Manholes-3149	279.32	39.9	28.13	8	PVC	0.01	3,739	3	20	23	0.6		
Kirkland_Main-3371	Kirkland_Manholes-3145	283.25	Kirkland_Manholes-3149	279.32	272.6	1.44	8	PVC	0.01	847	2	24	25	3		
Kirkland_Main-3372	Kirkland_Manholes-1382	428.64	Kirkland_Manholes-3150	427.16	302.5	0.49	8	PVC	0.01	493	1	8	9	1.9		
Kirkland_Main-3373	Kirkland_Manholes-3150	427.16	Kirkland_Manholes-1347	427.05	67.8	0.16	8	PVC	0.01	284	2	12	14	4.8		
Kirkland_Main-3375	Kirkland_Manholes-2803	158.22	Kirkland_Manholes-3151	154.6	93.3	3.88	8	PVC	0.01	1,389	29	123	153	11	SM14-Ex-EX313	
Kirkland_Main-3376	Kirkland_Manholes-2609	193.8	Kirkland_Manholes-3152	172.55	189.8	11.2	8	PVC	0.01	2,359	1	8	9	0.4		
Kirkland_Main-3377	Kirkland_Manholes-3154	166.6	Kirkland_Manholes-3153	166.34	271.7	0.1	8	PVC	0.01	218	20	56	76	34.8	SM14-Ex-EX294	
Kirkland_Main-3378	Kirkland_Manholes-2629	172.55	Kirkland_Manholes-3154	166.6	85	7	8	PVC	0.01	1,865	11	24	35	1.9	SM14-Ex-EX295	
Kirkland_Main-3379	Kirkland_Manholes-3155	166.88	Kirkland_Manholes-3154	166.6	37.7	0.74	8	PVC	0.01	607	8	28	36	6	SM14-Ex-EX294	
Kirkland_Main-3380	Kirkland_Manholes-2637	187.87	Kirkland_Manholes-3156	168.61	186.4	10.33	8	PVC	0.01	2,267	8	20	28	1.2	SM14-Ex-EX294	
Kirkland_Main-3381	Kirkland_Manholes-3156	168.61	Kirkland_Manholes-3155	166.88	387	0.45	8	PVC	0.01	471	8	24	32	6.9	SM14-Ex-EX294	
Kirkland_Main-3382	Kirkland_Manholes-3153	166.34	O-37	146.26	92.7	21.67	8	PVC	0.01	3,282	85	282	367	11.2	SM14-Ex-EX294	
Kirkland_Main-3383	Kirkland_Manholes-3157	158.55	O-36	147.51	94.1	11.73	8	PVC	0.01	2,415	16	64	80	3.3	SM14-Ex-EX281	
Kirkland_Main-3384	Kirkland_Manholes-3158	172.29	Kirkland_Manholes-3157	158.55	121.1	11.35	8	PVC	0.01	2,375	1	4	5	0.2	SM14-Ex-EX281	
Kirkland_Main-3385	Kirkland_Manholes-2628	186	Kirkland_Manholes-3159	168.84	190.6	9	8	PVC	0.01	2,115	14	52	65	3.1	SM14-Ex-EX281	
Kirkland_Main-3386	Kirkland_Manholes-3159	168.84	Kirkland_Manholes-3157	158.55	57.7	17.84	8	PVC	0.01	2,978	15	56	70	2.4	SM14-Ex-EX281	Drop Connection
Kirkland_Main-3387	Kirkland_Manholes-2601	228.74	Kirkland_Manholes-3160	174.95	323	16.65	8	PVC	0.01	2,877	34	127	161	5.6	SM14-Ex-EX299	
Kirkland_Main-3388	Kirkland_Manholes-2796	185.45	Kirkland_Manholes-3161	177.36	230.8	3.5	8	PVC	0.01	1,320	6	20	26	2	SM14-Ex-EX296	
Kirkland_Main-3389	Kirkland_Manholes-2599	217.5	Kirkland_Manholes-3161	177.36	310.3	12.94	8	PVC	0.01	2,536	4	16	20	0.8	SM14-Ex-EX301	
Kirkland_Main-3390	Kirkland_Manholes-3162	175.71	Kirkland_Manholes-3160	174.95	166.9	0.46	8	PVC	0.01	476	12	44	55	11.6	SM14-Ex-EX296	
Kirkland_Main-3391	Kirkland_Manholes-3161	177.36	Kirkland_Manholes-3162	175.71	336.3	0.49	8	PVC	0.01	494	11	40	51	10.3	SM14-Ex-EX296	
Kirkland_Main-3392	Kirkland_Manholes-3160	174.95	Kirkland_Manholes-3163	173.85	309.7	0.36	8	PVC	0.01	420	47	175	221	52.7	SM14-Ex-EX296	
Kirkland_Main-3393	Kirkland_Manholes-3163	173.85	Kirkland_Manholes-3152	172.55	286.2	0.45	8	PVC	0.01	475	55	195	250	52.6	SM14-Ex-EX296	
Kirkland_Main-3394	Kirkland_Manholes-2600	217.97	Kirkland_Manholes-3163	173.85	279.5	15.78	8	PVC	0.01	2,801	8	16	23	0.8	SM14-Ex-EX298	
Kirkland_Main-3395	Kirkland_Manholes-3152	172.55	Kirkland_Manholes-3164	171.21	150.7	0.89	8	PVC	0.01	665	57	207	263	39.6	SM14-Ex-EX296	
Kirkland_Main-3397	Kirkland_Manholes-3164	171.21	Kirkland_Manholes-3153	166.34	136.7	3.56	8	PVC	0.01	1,331	64	223	286	21.5	SM14-Ex-EX296	
Kirkland_Main-3398	Kirkland_Manholes-2123	164.83	Kirkland_Manholes-3165	156.79	188.1	4.27	8	PVC	0.01	1,457	3	12	15	1	SM14-Ex-EX238	
Kirkland_Main-3399	Kirkland_Manholes-2493	157.85	Kirkland_Manholes-3165	156.79	186.1	0.57	8	PVC	0.01	532	1	4	5	0.9	SM14-Ex-EX237	
Kirkland_Main-3400	Kirkland_Manholes-3165	156.79	O-34	148.75	44.4	18.12	8	PVC	0.01	3,001	5	20	25	0.8	SM14-Ex-EX238	
Kirkland_Main-3401	Kirkland_Manholes-3151	154.6	O-38	150	83	5.54	12	PVC	0.01	4,894	29	127	157	3.2	SM14-Ex-EX313	
Kirkland_Main-3402	Kirkland_Manholes-3166	161.38	Kirkland_Manholes-3167	157.21	249.9	1.67	6	Concrete	0.013	325	8	12	20	6.1		
Kirkland_Main-3403	Kirkland_Manholes-3167	157.21	O-30	156.87	20.3	1.67	6	Concrete	0.013	326	8	16	24	7.3		Drop Connection
Kirkland_Main-3404	Kirkland_Manholes-2068	163.08	O-43	162.02	20.5	5.16	8	PVC	0.01	1,602	13	64	77	4.8	SM14-Ex-EX198	
Kirkland_Main-3405	Kirkland_Manholes-2069	170.43	Kirkland_Manholes-3168	162.8	388.5	1.96	8	PVC	0.01	988	76	95	171	17.3	SM14-Ex-EX199	
Kirkland_Main-3406	Kirkland_Manholes-3168	162.8	O-29	162.02	22.8	3.42	8	PVC	0.01	1,305	77	99	176	13.5	SM14-Ex-EX199	
Kirkland_Main-3407	Kirkland_Manholes-3169	153.32	Kirkland_Manholes-1708	148.34	451.5	1.1	12	PVC	0.01	2,183	0	8	8	0.4	SM14-Ex-EX197	
Kirkland_Main-3408	Kirkland_Manholes-3170	175.74	O-28	173.9	72.2	2.55	8	PVC	0.01	1,125	0	4	4	0.4		
Kirkland_Main-3409	Kirkland_Manholes-1642	158.76	O-27	153.59	147.5	3.5	12	PVC	0.01	3,891	234	950	1,184	30.4	SM7	

Existing with Proposed Improvements - Peak Hour Flow - Pipe Capacity Table

Label	Upstream Node	Upstream Invert Elevation (ft)	Downstream Node	Downstream Invert Elevation (ft)	Length (ft)	Slope (%)	Diameter (in)	Material	Manning's n	Design Capacity (gpm)	Domestic Flow (gpm)	I/I Flow (gpm)	Total Flow (gpm)	Percent Full (%)	CIP No.	Notes
Kirkland_Main-3410	Kirkland_Manholes-1646	177.66	O-23	163.59	79.6	17.67	8	PVC	0.01	2,963	0	4	4	0.1	SM14-Ex-EX174	
Kirkland_Main-3411	Kirkland_Manholes-1602	196.74	Kirkland_Manholes-3171	164.9	343.8	9.26	8	PVC	0.01	2,146	74	238	312	14.6	SM14-Ex-EX172	
Kirkland_Main-3412	Kirkland_Manholes-3171	164.9	O-22	163.59	29	4.51	12	PVC	0.01	4,416	132	421	553	12.5	SM14-Ex-EX121	
Kirkland_Main-3413	Kirkland_Manholes-3172	165.73	Kirkland_Manholes-3171	164.9	49.5	1.68	8	PVC	0.01	913	58	179	237	26	SM14-Ex-EX121	
Kirkland_Main-3414	Kirkland_Manholes-1598	169.75	Kirkland_Manholes-3172	165.73	259.8	1.55	8	PVC	0.01	877	58	175	233	26.6	SM14-Ex-EX121	
Kirkland_Main-3415	Kirkland_Manholes-3173	155.95	O-16	154.93	82	1.24	8	PVC	0.01	787	7	41	48	6.1		
Kirkland_Main-3416	Kirkland_Manholes-1274	175.64	Kirkland_Manholes-3173	155.95	196.1	10.04	8	PVC	0.01	2,234	6	33	39	1.7		
Kirkland_Main-3417	Kirkland_Manholes-458	212.1	O-14	173.22	270.2	14.39	8	PVC	0.01	2,674	31	123	154	5.7	SM14-Ex-EX67	
Kirkland_Main-3418	Kirkland_Manholes-3174	172.82	O-13	166.72	27.1	22.51	8	PVC	0.01	3,345	2	20	22	0.7		
Kirkland_Main-3419	Kirkland_Manholes-472	192.62	Kirkland_Manholes-3174	172.82	71.3	27.75	8	PVC	0.01	3,714	2	16	18	0.5		
Kirkland_Main-3420	Kirkland_Manholes-466	159.47	O-12	159.29	18.7	0.96	8	PVC	0.01	691	13	56	69	10	SM14-Ex-EX45	
Kirkland_Main-3421	Kirkland_Manholes-786	173.41	O-11	153.37	102.1	19.63	8	PVC	0.01	3,124	62	294	356	11.4		
Kirkland_Main-3422	Kirkland_Manholes-3175	156.47	Kirkland_Manholes-1105	155.49	245.4	0.4	8	PVC	0.01	446	74	282	356	79.8	SM14-2021-DF3	
Kirkland_Main-3424	Kirkland_Manholes-3176	350.9	Kirkland_Manholes-2993	335.98	232.3	6.42	8	PVC	0.01	1,787	1	4	5	0.3		
Kirkland_Main-3425	Kirkland_Manholes-3183	400.11	Kirkland_Manholes-3182	398.7	286.4	0.49	8	PVC	0.01	495	0	4	4	0.8		
Kirkland_Main-3426	Kirkland_Manholes-3182	398.7	Kirkland_Manholes-3181	397.83	157.2	0.55	8	PVC	0.01	525	0	8	8	1.5		
Kirkland_Main-3427	Kirkland_Manholes-3181	397.83	Kirkland_Manholes-3180	396.32	304.9	0.5	8	PVC	0.01	496	0	12	12	2.5		
Kirkland_Main-3428	Kirkland_Manholes-3177	399.25	Kirkland_Manholes-3178	398.25	237	0.42	8	PVC	0.01	458	0	8	8	1.7		
Kirkland_Main-3429	Kirkland_Manholes-3178	398.25	Kirkland_Manholes-3179	397.18	174.5	0.61	8	PVC	0.01	552	0	12	12	2.2		
Kirkland_Main-3430	Kirkland_Manholes-3179	397.18	Kirkland_Manholes-3180	396.32	145.5	0.59	8	PVC	0.01	542	0	16	16	2.9		
Kirkland_Main-3431	Kirkland_Manholes-3180	396.32	Kirkland_Manholes-3186	394.01	374.3	0.62	8	PVC	0.01	554	1	32	32	5.8	SM14-Ex-EX207	
Kirkland_Main-3432	Kirkland_Manholes-3186	394.01	Kirkland_Manholes-3187	393.39	93.6	0.66	8	PVC	0.01	574	1	36	37	6.4	SM14-Ex-EX207	
Kirkland_Main-3433	Kirkland_Manholes-3187	393.39	Kirkland_Manholes-3188	392.16	246.3	0.5	8	PVC	0.01	498	1	40	41	8.2		
Kirkland_Main-3434	Kirkland_Manholes-3185	403.06	Kirkland_Manholes-3184	397.63	317.3	1.71	8	PVC	0.01	922	0	4	4	0.4		
Kirkland_Main-3435	Kirkland_Manholes-3184	397.63	Kirkland_Manholes-3189	393.42	318.2	1.32	8	PVC	0.01	811	31	8	39	4.9		
Kirkland_Main-3436	Kirkland_Manholes-3189	393.42	Kirkland_Manholes-3188	392.16	76.3	1.65	8	PVC	0.01	906	31	16	47	5.2		
Kirkland_Main-3437	Kirkland_Manholes-3188	392.16	Kirkland_Manholes-1929	374.67	305.2	5.73	8	PVC	0.01	1,688	32	60	92	5.4		
Kirkland_Main-3438	Kirkland_Manholes-3192	307.27	Kirkland_Manholes-3191	306.22	126.1	0.84	8	PVC	0.01	644	1	4	5	0.7		
Kirkland_Main-3439	Kirkland_Manholes-3191	306.22	Kirkland_Manholes-2894	306.1	28.9	0.4	8	PVC	0.01	446	2	12	14	3		
Kirkland_Main-3440	Kirkland_Manholes-3190	323.62	Kirkland_Manholes-3191	306.22	169.1	10.29	8	PVC	0.01	2,262	1	4	5	0.2		
Kirkland_Main-3441	Kirkland_Manholes-620	55.37	Kirkland_Manholes-3193	49.78	279.6	2	8	PVC	0.01	997	0	8	8	0.8		
Kirkland_Main-3442	Kirkland_Manholes-3193	49.78	Kirkland_Manholes-619	48.43	193	0.7	8	PVC	0.01	590	0	16	17	2.8		
Kirkland_Main-3443	Kirkland_Manholes-1685	57.24	Kirkland_Manholes-731	53.54	120.6	3.07	12	PVC	0.01	3,640	88	457	545	15	SM5	
Kirkland_Main-3444	Kirkland_Manholes-1852	284.97	Kirkland_Manholes-3145	283.25	105.1	1.64	8	PVC	0.01	902	0	8	8	0.9		
Kirkland_Main-3445	Kirkland_Manholes-2130	161.57	O-31	156.67	31.5	15.55	8	PVC	0.01	2,780	21	24	44	1.6	SM14-Ex-EX235	
Kirkland_Main-3446	Kirkland_Manholes-3195	259.3	Kirkland_Manholes-682	258.64	178.4	0.37	8	PVC	0.01	429	1	12	13	2.9		
Kirkland_Main-3447	Kirkland_Manholes-686	272.79	Kirkland_Manholes-3195	262.73	170.3	5.91	8	PVC	0.01	1,714	0	4	4	0.2		Drop Connection
Kirkland_Main-3448	Kirkland_Manholes-3194	260.3	Kirkland_Manholes-3195	259.3	92.2	1.08	8	PVC	0.01	733	0	4	4	0.5		
Kirkland_Main-3450	Kirkland_Manholes-3198	69.13	Kirkland_Manholes-2805	68.41	178.9	0.4	8	PVC	0.01	446	0	24	24	5.4		
Kirkland_Main-3451	Kirkland_Manholes-3197	131.57	Kirkland_Manholes-3196	122.5	306.9	2.96	8	PVC	0.01	1,212	1	8	10	0.8	SM10	
Kirkland_Main-3453	Kirkland_Manholes-2804	82.15	Kirkland_Manholes-3198	69.13	175.8	7.41	8	PVC	0.01	1,919	0	6	6	0.3		
Kirkland_Main-3454	Kirkland_Manholes-3200	88.54	Kirkland_Manholes-3199	84.4	128.7	3.22	8	PVC	0.01	1,264	0	6	6	0.5		
Kirkland_Main-3455	Kirkland_Manholes-3199	84.4	Kirkland_Manholes-3198	69.13	210.2	7.27	8	PVC	0.01	1,900	0	12	12	0.6		
Kirkland_Main-3456	Kirkland_Manholes-2778	255.64	Kirkland_Manholes-3201	243.59	148	8.14	8	PVC	0.01	2,012	19	16	35	1.7		
Kirkland_Main-3457	Kirkland_Manholes-3201	243.59	Kirkland_Manholes-2802	238.36	22.3	23.44	8	PVC	0.01	3,414	19	19	38	1.1		
Kirkland_Main-3458	Kirkland_Manholes-2641	88.89	Kirkland_Manholes-3202	66.61	82.1	27.14	8	PVC	0.01	3,673	5	24	30	0.8		
Kirkland_Main-3459	Kirkland_Manholes-3202	66.61	Kirkland_Manholes-3203	49.55	127.5	13.38	8	PVC	0.01	2,579	5	30	36	1.4		
Kirkland_Main-3461	Kirkland_Manholes-3204	163.55	Kirkland_Manholes-2130	161.57	74.1	2.67	8	PVC	0.01	1,153	1	4	5	0.4		
Kirkland_Main-3462	Kirkland_Manholes-3205	293.32	Kirkland_Manholes-1852	284.97	245.2	3.41	8	PVC	0.01	1,301	0	4	4	0.3		
Kirkland_Main-3463	Kirkland_Manholes-3206	505.9	Kirkland_Manholes-3207	502.85	330.6	0.92	8	PVC	0.01	677	1	4	5	0.7		
Kirkland_Main-3464	Kirkland_Manholes-3207	502.85	Kirkland_Manholes-3208	497.69	398.8	1.29	8	PVC	0.01	802	2	8	10	1.3		
Kirkland_Main-3465	Kirkland_Manholes-3208	497.69	Kirkland_Manholes-3209	497.22	90.8	0.52	8	PVC	0.01	507	2	12	14	2.8		
Kirkland_Main-3466	Kirkland_Manholes-3209	497.22	Kirkland_Manholes-3210	496.11	223.1	0.5	8	PVC	0.01	497	2	16	18	3.6		
Kirkland_Main-3467	Kirkland_Manholes-3210	496.11	Kirkland_Manholes-1494	496.1	92	0.01	8	PVC	0.01	74	2	20	22	30		
Kirkland_Main-3468	Kirkland_Manholes-3212	420.94	Kirkland_Manholes-3213	419.82	168.4	0.66	8	PVC	0.01	575	0	2	2	0.4		
Kirkland_Main-3469	Kirkland_Manholes-3213	419.82	Kirkland_Manholes-3214	418.95	128.5	0.68	8	PVC	0.01	580	0	5	5	0.8		
Kirkland_Main-3470	Kirkland_Manholes-3211	420.5	Kirkland_Manholes-3214	418.95	223.1	0.69	8	PVC	0.01	588	0	2	2	0.4		
Kirkland_Main-3471	Kirkland_Manholes-3214	418.95	Kirkland_Manholes-3215	418.25	213.6	0.33	8	PVC	0.01	404	0	9	9	2.3		
Kirkland_Main-3472	Kirkland_Manholes-3215	418.25	Kirkland_Manholes-3216	416.2	334.1	0.61	8	PVC	0.01	552	0	12	12	2.1		
Kirkland_Main-3473	Kirkland_Manholes-3216	416.2	Kirkland_Manholes-3217	414.96	329.2	0.38	8	PVC	0.01	433	0	14	14	3.2		
Kirkland_Main-3474	Kirkland_Manholes-3217	414.96	Kirkland_Manholes-3218	412.9	114.1	1.81	8	PVC	0.01	947	1	16	17	1.8		
Kirkland_Main-3475	Kirkland_Manholes-3218	412.9	Kirkland_Manholes-2906	405.37	172.8	4.36	8	PVC	0.01	1,472	1	19	20	1.3		

Existing with Proposed Improvements - Peak Hour Flow - Pipe Capacity Table

Label	Upstream Node	Upstream Invert Elevation (ft)	Downstream Node	Downstream Invert Elevation (ft)	Length (ft)	Slope (%)	Diameter (in)	Material	Manning's n	Design Capacity (gpm)	Domestic Flow (gpm)	I/I Flow (gpm)	Total Flow (gpm)	Percent Full (%)	CIP No.	Notes
Kirkland_Main-3476	Kirkland_Manholes-718	150.12	Kirkland_Manholes-3219	149.17	95.4	1	8	PVC	0.01	703	50	79	128	18.2	SM14-2035-DF5	
Kirkland_Main-3477	Kirkland_Manholes-3219	149.17	Kirkland_Manholes-3220	148.71	120.2	0.38	8	PVC	0.01	436	50	84	134	30.7	SM14-2021-DF2	
Kirkland_Main-3478	Kirkland_Manholes-3220	148.71	Kirkland_Manholes-719	148.45	82.3	0.32	8	PVC	0.01	396	50	90	139	35.2	SM14-2021-DF2	
Kirkland_Main-3479	Kirkland_Manholes-3221	407.29	Kirkland_Manholes-3222	405.15	69.7	3.07	8	PVC	0.01	1,235	1	4	5	0.4		
Kirkland_Main-3480	Kirkland_Manholes-3222	405.15	Kirkland_Manholes-1363	403.55	104.8	1.53	8	PVC	0.01	871	2	8	10	1.2		
Kirkland_Main-3481	Kirkland_Manholes-3223	405.2	Kirkland_Manholes-3224	400.94	146.9	2.9	8	PVC	0.01	1,201	1	4	5	0.4		
Kirkland_Main-3482	Kirkland_Manholes-3225	409.6	Kirkland_Manholes-3224	400.94	369	2.35	8	PVC	0.01	1,080	1	4	5	0.5		
Kirkland_Main-3483	Kirkland_Manholes-3224	400.94	Kirkland_Manholes-3226	396.71	176	2.4	8	PVC	0.01	1,093	2	12	14	1.3		
Kirkland_Main-3484	Kirkland_Manholes-3226	396.71	Kirkland_Manholes-2992	396.35	10.8	3.34	8	PVC	0.01	1,289	2	16	18	1.4		
Kirkland_Main-3485	Kirkland_Manholes-3227	308.86	Kirkland_Manholes-3228	299.55	189.6	4.91	8	PVC	0.01	1,562	1	4	5	0.3		
Kirkland_Main-3486	Kirkland_Manholes-3228	299.55	Kirkland_Manholes-3229	296.76	44.7	6.24	8	PVC	0.01	1,761	1	8	9	0.5		
Kirkland_Main-3487	Kirkland_Manholes-3229	296.76	Kirkland_Manholes-2901	294.77	63.1	3.16	8	PVC	0.01	1,252	1	12	13	1		
Kirkland_Main-3488	Kirkland_Manholes-3230	157.83	Kirkland_Manholes-3231	156.85	192.6	0.51	8	PVC	0.01	503	0	6	6	1.1		
Kirkland_Main-3489	Kirkland_Manholes-3231	156.85	Kirkland_Manholes-3232	156.12	91	0.8	8	PVC	0.01	632	7	11	19	3		
Kirkland_Main-3490	Kirkland_Manholes-3232	156.12	Kirkland_Manholes-716	152.58	36.4	9.73	8	PVC	0.01	2,199	7	17	24	1.1		
Kirkland_Main-3492	Kirkland_Manholes-3233	197.29	Kirkland_Manholes-1117	196.58	41.1	1.73	15	PVC	0.01	4,957	16	4	20	0.4		
Kirkland_Main-3493	Kirkland_Manholes-3235	436.7	Kirkland_Manholes-2008	435.7	179.8	0.56	8	PVC	0.01	526	2	8	10	2		
Kirkland_Main-3494	Kirkland_Manholes-3234	236.42	Kirkland_Manholes-1249	223.25	243.5	5.41	8	PVC	0.01	1,640	15	91	105	6.4	SM14-Ex-EX65	
Kirkland_Main-3495	Kirkland_Manholes-1247	236.99	Kirkland_Manholes-3234	236.42	76.3	0.75	8	PVC	0.01	609	13	74	87	14.3	SM14-Ex-EX65	
Kirkland_Main-3496	Kirkland_Manholes-3237	442.96	Kirkland_Manholes-3235	436.7	126.7	4.94	8	PVC	0.01	1,567	1	4	5	0.3		
Kirkland_Main-3497	Kirkland_Manholes-3242	314.11	Kirkland_Manholes-3243	305.45	217.3	3.98	8	PVC	0.01	1,407	0	4	4	0.3		
Kirkland_Main-3498	Kirkland_Manholes-3243	305.45	Kirkland_Manholes-2372	304.48	24.4	3.99	8	PVC	0.01	1,408	0	8	8	0.6		
Kirkland_Main-3499	Kirkland_Manholes-3241	300.47	Kirkland_Manholes-3240	289.24	289.6	3.88	8	PVC	0.01	1,388	2	4	6	0.4		
Kirkland_Main-3500	Kirkland_Manholes-3240	289.24	Kirkland_Manholes-3239	288.78	114.9	0.4	8	PVC	0.01	446	2	8	10	2.1		
Kirkland_Main-3501	Kirkland_Manholes-3239	288.78	Kirkland_Manholes-3238	285.43	95.5	3.51	8	PVC	0.01	1,321	2	12	14	1		
Kirkland_Main-3502	Kirkland_Manholes-263	292.03	Kirkland_Manholes-3238	285.43	114.2	5.78	8	PVC	0.01	1,695	29	99	128	7.6	SM14-Ex-EX252	
Kirkland_Main-3503	Kirkland_Manholes-3238	285.43	Kirkland_Manholes-2327	280.44	83.6	5.97	8	PVC	0.01	1,722	31	115	147	8.5	SM14-Ex-EX252	
Kirkland_Main-3505	Kirkland_Manholes-3236	241.89	Kirkland_Manholes-3234	236.42	154.2	3.55	8	PVC	0.01	1,328	1	8	10	0.7		
Kirkland_Main-3506	Kirkland_Manholes-2486	152.49	O-35	152.05	116.8	0.38	8	PVC	0.01	433	39	127	166	38.3	SM14-Ex-EX239	
Other_System_Main-6	MH-320	399.28	Kirkland_Manholes-3177	399.25	69.1	0.04	6	PVC	0.01	64	0	4	4	6.2		
Other_System_Main-7	MH-317	393.56	Kirkland_Manholes-3189	393.42	34.5	0.4	8	PVC	0.01	446	0	4	4	0.9		
Other_System_Main-8	MH-326	162.67	MH-323	161.73	233.9	0.4	8	PVC	0.01	446	0	4	4	0.9		
Other_System_Main-9	MH-323	161.73	Kirkland_Manholes-3166	161.38	88.4	0.4	6	PVC	0.01	207	8	8	16	7.6		
SS_Main_Selection_06-13-2016-1	MH 05-714	24.7	MH_Selection_06-13-2016-2	24.58	51.6	0.23	30	Ductile Iron	0.012	9,616	796	3,464	5,914	61.5	SM9	Updated per as-built drawings
SS_Main_Selection_06-13-2016-11	MH_Selection_06-13-2016-4	21.4	MH_Selection_06-13-2016-10	20.85	62.6	0.88	48	Concrete	0.013	60,432	1,045	4,082	6,780	11.2		Updated per as-built drawings
SS_Main_Selection_06-13-2016-12	MH_Selection_06-13-2016-10	20.85	MH_Selection_06-13-2016-11	20.7	78.4	0.19	48	Concrete	0.013	28,192	1,045	4,082	6,780	24		Updated per as-built drawings
SS_Main_Selection_06-13-2016-2	MH_Selection_06-13-2016-3	22.2	MH_Selection_06-13-2016-4	21.4	166.2	0.48	48	Concrete	0.013	44,726	796	3,464	5,914	13.2		Updated per as-built drawings
SS_Main_Selection_06-13-2016-3	MH_Selection_06-13-2016-2	24.22	MH_Selection_06-13-2016-6	24.16	7.3	0.82	30	Ductile Iron	0.012	18,021	796	3,464	5,914	32.8	SM9	Updated per as-built drawings
SS_Main_Selection_06-13-2016-4	MH_Selection_06-13-2016-6	24.16	MH_Selection_06-13-2016-7	23.6	28.1	1.99	30	Ductile Iron	0.012	28,152	796	3,464	5,914	21	SM9	Updated per as-built drawings
SS_Main_Selection_06-13-2016-5	MH_Selection_06-13-2016-7	23.5	MH_Selection_06-13-2016-8	22.81	32.8	2.11	48	Concrete	0.013	93,567	796	3,464	5,914	6.3		Updated per as-built drawings
SS_Main_Selection_06-13-2016-6	MH_Selection_06-13-2016-8	22.81	MH_Selection_06-13-2016-9	22.44	14.9	2.49	48	Concrete	0.013	101,749	796	3,464	5,914	5.8		Updated per as-built drawings
SS_Main_Selection_06-13-2016-7	MH_Selection_06-13-2016-9	22.44	MH_Selection_06-13-2016-3	22.2	69.4	0.35	48	Concrete	0.013	37,907	796	3,464	5,914	15.6		Updated per as-built drawings
SS_Main_Selection_06-13-2016-9	MH_Selection_06-13-2016-5	24.55	MH_Selection_06-13-2016-11	23.6	12.8	7.44	12	PVC	0.013	4,360.77	101.33	139.964	241.293	5.5		Updated per as-built drawings

Existing with Proposed Improvements - Peak Hour Flow - Pump Table

Label	Status	Pump Definition	Pumped Flow (gpm)	Pump Head (ft)	Notes
PLAZA_PUMP	On	LAKE PLAZA	1,303	44.9	
ROSEPT_PUMP	On	ROSE PT LANE	301	65.8	
SOUTHBAY_PUMP	On	SOUTH BAY	180	190.0	
TREND_PUMP	On	TREND	176	25.0	
WAVERLY_PUMP	On	WAVERLY PARK-Prop 350gpm	350	116.1	
YARROWBAYII_PUMP	On	YARROW POINT	72	45.8	

Existing with Proposed Improvements - Peak Hour Flow - Wet Well Table

Label	Ground Elevation (ft)	Maximum Elevation (ft)	Initial Elevation (ft)	Minimum Elevation (ft)	Base Elevation (ft)	Flow In (gpm)	Flow Out (gpm)	Net Flow In (gpm)	Notes
PLAZA_WW	21.95	10	6.5	2	0	1,286	1,303	-17	
ROSEPT_WETWELL	28.91	28	12	11	10	138	301	-163	
SOUTHBAY_WETWELL	42.96	26.5	25	24	22	37	180	-143	
TREND_WETWELL	340.3	330	330	321.5	317.75	102	176	-75	
WAVERLY_WETWELL	27	10	2	1	0	321	350	-30	
YARROW POINT_WETWELL	32.18	20	8	6	6	58	72	-13	

2021 (6-year) with Proposed Improvements - Peak Hour Flow - Pipe Capacity Table

Label	Upstream Node	Upstream Invert Elevation (ft)	Downstream Node	Downstream Invert Elevation (ft)	Length (ft)	Slope (%)	Diameter (in)	Material	Manning's n	Design Capacity (gpm)	Domestic Flow (gpm)	I/I Flow (gpm)	Total Flow (gpm)	Percent Full (%)	CIP No.	Notes
Basin 3	Kirkland_Manholes-3128	323.94	Kirkland_Manholes-3129	308.71	343.2	4.44	8	PVC	0.01	1,485	1	8	9	0.6		
CO-1	Kirkland_Manholes-293	22.09	Kirkland_Manholes-310	21.69	516.5	0.08	12	PVC	0.01	578	1	18	19	3.2	SM14-Ex-EX37	
CO-2	Kirkland_Manholes-310	21.69	Kirkland_Manholes-311	21.29	254.7	0.16	12	PVC	0.01	824	4	27	30	3.7	SM14-Ex-EX37	
CO-6	Kirkland_Manholes-1496	491.57	Kirkland_Manholes-1461	483.24	408.5	2.04	8	PVC	0.01	1,007	0	4	4	0.4		
CO-8	Kirkland_Manholes-1271	222.62	Kirkland_Manholes-1272	197.83	531.9	4.66	8	PVC	0.01	1,522	0	8	9	0.6		
CO-9	Kirkland_Manholes-1272	197.83	Kirkland_Manholes-1273	182.86	225.5	6.64	8	PVC	0.01	1,817	4	16	20	1.1		
CO-11	Kirkland_Manholes-3102	53.77	Kirkland_Manholes-2664	53.2	380.4	0.15	18	PVC	0.01	2,372	137	403	540	22.8	SM14-Ex-EX222	
CO-13	Kirkland_Manholes-2664	53.2	Kirkland_Manholes-2204	53	65.8	0.3	18	PVC	0.01	3,378	137	409	546	16.2	SM14-Ex-EX222	
CO-14	Kirkland_Manholes-2204	53	Kirkland_Manholes-3101	52.44	123.2	0.45	18	PVC	0.01	4,132	140	428	568	13.7	SM14-Ex-EX222	
CO-15	Kirkland_Manholes-978	222.9	Kirkland_Manholes-979	219.9	335.8	0.89	8	PVC	0.01	666	9	52	61	9.1		
CO-17	Kirkland_Manholes-979	219.9	MH-327	219.64	97.4	0.27	8	PVC	0.01	364	9	56	65	18		
CO-18	MH-327	219.64	Kirkland_Manholes-980	219.4	90.3	0.27	8	PVC	0.01	364	14	65	79	21.6		
CO-19	Kirkland_Manholes-1011	226.35	MH-327	219.64	167.6	4	8	PVC	0.01	1,411	5	4	9	0.6		
CO-20	Kirkland_Manholes-1907	380.32	Kirkland_Manholes-1909	380	67.5	0.47	8	PVC	0.01	485	20	12	32	6.5		
CO-21	Kirkland_Manholes-1909	380	Kirkland_Manholes-1366	377.95	352.1	0.58	8	PVC	0.01	538	49	77	126	23.5		
CO-22	Kirkland_Manholes-638	236.51	Kirkland_Manholes-637	235.38	223.4	0.51	21	PVC	0.01	6,576	536	1,571	2,107	32		
CO-23	Kirkland_Manholes-637	235.38	Kirkland_Manholes-633	234.78	246.2	0.24	21	PVC	0.01	4,564	541	1,575	2,116	46.4		
CO-25	Kirkland_Manholes-2644	74.88	Kirkland_Manholes-2655	44.22	203.4	15.07	8	PVC	0.01	2,737	14	73	87	3.2		
CO-26	Kirkland_Manholes-2642	102.55	MH-328	82.65	111.2	17.89	8	PVC	0.01	2,982	2	12	14	0.5		
CO-27	MH-328	82.65	Kirkland_Manholes-2644	74.88	76.8	10.12	8	PVC	0.01	2,242	5	31	35	1.6		
CO-28	Kirkland_Manholes-3144	94.3	Kirkland_Manholes-3143	93.65	162.7	0.4	8	PVC	0.01	446	3	6	9	2	SM14-Ex-EX293	
CO-29	Kirkland_Manholes-3143	93.65	MH-328	82.65	108.8	10.11	8	PVC	0.01	2,242	3	12	16	0.7	SM14-Ex-EX293	
CO-30	Kirkland_Manholes-2662	11.52	Kirkland_Manholes-2661	11.28	48.5	0.49	18	PVC	0.01	4,311	259	605	864	20.1	SM14-Ex-EX289	
CO-31	Kirkland_Manholes-2661	11.28	Kirkland_Manholes-2851	10.8	93.8	0.51	18	PVC	0.01	4,385	287	782	1,069	24.4	SM14-Ex-EX289	
CO-32	Kirkland_Manholes-3203	49.55	Kirkland_Manholes-2660	26.87	244.8	9.27	8	PVC	0.01	2,146	7	37	43	2		
CO-33	Kirkland_Manholes-2660	26.87	Kirkland_Manholes-2661	11.28	44	35.46	8	PVC	0.01	4,198	28	171	199	4.7		
CO-34	Kirkland_Manholes-2221	60.29	Kirkland_Manholes-2225	40.46	244.8	8.1	8	PVC	0.01	2,007	12	52	64	3.2		
CO-35	Kirkland_Manholes-2225	40.46	Kirkland_Manholes-2228	25	165.9	9.32	8	PVC	0.01	2,152	20	71	92	4.3		Drop Connection
CO-36	Kirkland_Manholes-2081	95.66	Kirkland_Manholes-2218	82.71	188.1	6.88	8	PVC	0.01	1,850	1	6	7	0.4		
CO-37	Kirkland_Manholes-2218	82.71	Kirkland_Manholes-2221	60.29	246.5	9.1	8	PVC	0.01	2,126	8	26	34	1.6		
CO-38	Kirkland_Manholes-2227	45.3	Kirkland_Manholes-2226	43.3	93.8	2.13	8	PVC	0.01	1,029	2	6	9	0.9		
CO-39	Kirkland_Manholes-2226	43.3	Kirkland_Manholes-2225	40.46	248.3	1.14	8	PVC	0.01	754	7	13	20	2.6		
CO-41	Kirkland_Manholes-1046	162.86	Kirkland_Manholes-3175	156.47	218.7	2.92	8	PVC	0.01	1,205	125	281	407	33.7		
CO-42	Kirkland_Manholes-1043	180.32	Kirkland_Manholes-3126	177.5	189.3	1.49	8	PVC	0.01	861	31	100	130	15.1		
CO-43	Kirkland_Manholes-3126	177.5	Kirkland_Manholes-1046	162.86	197.5	7.41	8	PVC	0.01	1,920	33	112	145	7.6		
CO-44	Kirkland_Manholes-61	205.17	Kirkland_Manholes-64	204.5	110.3	0.61	8	PVC	0.01	550	9	30	39	7.1	SM14-Ex-EX6	
CO-45	Kirkland_Manholes-64	204.5	Kirkland_Manholes-65	199.61	323.5	1.51	8	PVC	0.01	867	11	35	46	5.3	SM14-Ex-EX6	
CO-47	Kirkland_Manholes-2410	409.57	Kirkland_Manholes-2408	405.44	108.3	3.82	8	PVC	0.01	1,377	0	4	4	0.3		
CO-48	Kirkland_Manholes-2135	110	Kirkland_Manholes-2156	109.44	35	1.6	8	PVC	0.01	892	9	32	42	4.7		
CO-49	Kirkland_Manholes-2156	109.44	Kirkland_Manholes-2157	100.18	171	5.42	8	PVC	0.01	1,641	9	39	48	3		
CO-50	Kirkland_Manholes-2190	132.39	Kirkland_Manholes-2189	112.21	288.2	7	8	PVC	0.01	1,866	7	25	31	1.7		
CO-51	Kirkland_Manholes-2189	112.21	Kirkland_Manholes-2186	104.5	321.1	2.4	8	PVC	0.01	1,092	13	33	46	4.2		
CO-52	Kirkland_Manholes-2169	142.85	Kirkland_Manholes-2168	127.32	219.5	7.07	8	PVC	0.01	1,875	1	16	18	1	SM14-Ex-EX193	
CO-53	Kirkland_Manholes-2168	127.32	Kirkland_Manholes-2167	120.69	65.4	10.14	8	PVC	0.01	2,245	3	25	27	1.2	SM14-Ex-EX193	
CO-54	Kirkland_Manholes-2165	94.99	Kirkland_Manholes-2164	90.37	91.4	5.05	8	PVC	0.01	1,585	9	49	58	3.7		
CO-55	Kirkland_Manholes-2164	90.37	Kirkland_Manholes-2140	88.47	43.9	4.33	8	PVC	0.01	1,468	9	58	67	4.6		
CO-56	Kirkland_Manholes-1703	58	Kirkland_Manholes-1704	54.53	111.1	3.12	8	PVC	0.01	1,246	6	16	22	1.8	SM14-Ex-EX153	
CO-57	Kirkland_Manholes-1704	54.53	Kirkland_Manholes-1705	33.28	211.8	10.03	8	PVC	0.01	2,233	6	25	30	1.4	SM14-Ex-EX153	
CO-58	Kirkland_Manholes-1810	85.96	Kirkland_Manholes-1808	66.8	280.2	6.84	8	PVC	0.01	1,844	74	286	360	19.5	SM4	
CO-59	Kirkland_Manholes-1808	66.8	Kirkland_Manholes-1807	44.26	183.9	12.26	8	PVC	0.01	2,469	75	295	370	15	SM4	
CO-60	Kirkland_Manholes-1718	72.96	Kirkland_Manholes-1717	58.55	301.8	4.77	8	PVC	0.01	1,541	1	8	10	0.6	SM14-Ex-EX165	
CO-61	Kirkland_Manholes-1717	58.55	Kirkland_Manholes-1719	46.02	243.6	5.14	8	PVC	0.01	1,599	30	49	79	4.9	SM14-Ex-EX165	
CO-62	Kirkland_Manholes-1605	146.86	Kirkland_Manholes-1606	138.24	64.3	13.41	8	PVC	0.01	2,582	0	8	8	0.3	SM14-Ex-EX120	
CO-63	Kirkland_Manholes-1606	138.24	Kirkland_Manholes-1604	117.22	209.3	10.04	8	PVC	0.01	2,234	0	16	16	0.7	SM14-Ex-EX120	
CO-64	Kirkland_Manholes-3029	503.06	Kirkland_Manholes-1462	498.98	186.9	2.18	8	PVC	0.01	1,042	1	4	6	0.5	SM14-Ex-EX273	
CO-66	Kirkland_Manholes-1468	502.5	Kirkland_Manholes-1462	498.98	381.4	0.92	8	PVC	0.01	677	2	4	6	0.9	SM14-Ex-EX271	
CO-67	Kirkland_Manholes-1462	498.98	Kirkland_Manholes-1463	498.43	46.4	1.18	8	PVC	0.01	767	5	12	17	2.2	SM14-Ex-EX271	
CO-69	Kirkland_Manholes-1251	198.9	Kirkland_Manholes-1252	181.71	334.6	5.14	8	PVC	0.01	1,598	32	157	189	11.8	SM14-Ex-EX101	
CO-70	Kirkland_Manholes-1250	210.15	Kirkland_Manholes-1251	198.9	400	2.81	8	PVC	0.01	1,182	25	140	165	14	SM14-Ex-EX101	
CO-71	Kirkland_Manholes-1310	231.57	Kirkland_Manholes-1251	198.9	267.1	12.23	8	PVC	0.01	2,466	3	8	11	0.5	SM14-Ex-EX99	
CO-72	Kirkland_Manholes-230	172.81	Kirkland_Manholes-228	142.32	167.5	18.2	8	PVC	0.01	3,008	48	121	169	5.6		
CO-73	Kirkland_Manholes-3115	187.58	Kirkland_Manholes-228	142.32	414	10.93	8	PVC	0.01	2,331	3	4	7	0.3		

2021 (6-year) with Proposed Improvements - Peak Hour Flow - Pipe Capacity Table

Label	Upstream Node	Upstream Invert Elevation (ft)	Downstream Node	Downstream Invert Elevation (ft)	Length (ft)	Slope (%)	Diameter (in)	Material	Manning's n	Design Capacity (gpm)	Domestic Flow (gpm)	I/I Flow (gpm)	Total Flow (gpm)	Percent Full (%)	CIP No.	Notes
CO-74	Kirkland_Manholes-1287	140.18	Kirkland_Manholes-1288	139.29	58.2	1.53	8	PVC	0.01	872	33	165	197	22.6	SM14-Ex-EX105	
CO-75	Kirkland_Manholes-1288	139.29	Kirkland_Manholes-1289	131.61	344.5	2.23	8	PVC	0.01	1,053	37	173	210	19.9	SM14-Ex-EX105	
CO-77	Kirkland_Manholes-1255	163.1	Kirkland_Manholes-1256	151.53	106.9	10.82	8	PVC	0.01	2,319	5	33	38	1.6	SM14-Ex-EX104	
CO-78	Kirkland_Manholes-1253	189.17	MH-329	183.73	57.5	9.46	8	PVC	0.01	2,169	1	8	9	0.4	SM14-Ex-EX104	
CO-80	Kirkland_Manholes-1254	186	MH-329	183.73	30.2	7.52	8	PVC	0.01	1,934	2	8	10	0.5	SM14-Ex-EX104	
CO-81	MH-329	183.73	Kirkland_Manholes-1255	163.1	274.1	7.53	8	PVC	0.01	1,934	3	25	28	1.4	SM14-Ex-EX104	
CO-83	Kirkland_Manholes-279	76.14	Kirkland_Manholes-278	56.62	239.7	8.14	8	PVC	0.01	2,012	32	6	39	1.9	SM10	
CO-84	Kirkland_Manholes-271	91.78	Kirkland_Manholes-272	84	313.5	2.48	8	PVC	0.01	1,111	54	132	186	16.7	SM10	If flow exceeds capacity, overflow MH will be activated; model appropriately.
CO-85	Kirkland_Manholes-272	84	Kirkland_Manholes-273	69.52	161.1	8.99	8	PVC	0.01	2,114	56	136	192	9.1	SM10	
CO-89	Kirkland_Manholes-1221	265	Kirkland_Manholes-1210	257.02	313.6	2.54	8	PVC	0.01	1,125	5	15	19	1.7	SM14-Ex-EX90	
CO-90	Kirkland_Manholes-1208	237.71	Kirkland_Manholes-1207	214.35	271	8.62	8	PVC	0.01	2,070	13	39	53	2.5	SM14-Ex-EX90	
CO-91	Kirkland_Manholes-1207	214.35	Kirkland_Manholes-1206	193.92	362.6	5.63	8	PVC	0.01	1,673	17	47	64	3.8	SM14-Ex-EX90	
CO-92	Kirkland_Manholes-1142	218.06	Kirkland_Manholes-1146	215.3	316.4	0.87	8	PVC	0.01	659	9	33	42	6.4	SM4	
CO-93	Kirkland_Manholes-1223	241.1	Kirkland_Manholes-1146	215.3	349.8	7.38	8	PVC	0.01	1,915	3	8	12	0.6	SM14-Ex-EX86	
CO-94	Kirkland_Manholes-1199	190.02	Kirkland_Manholes-1198	189.72	153.8	0.19	8	PVC	0.01	311	12	8	20	6.4	SM14-Ex-EX80	
CO-95	Kirkland_Manholes-1141	204.1	Kirkland_Manholes-1198	189.72	107.3	13.4	8	PVC	0.01	2,581	5	33	38	1.5	SM14-Ex-EX80	
CO-96	Kirkland_Manholes-3104	114.41	Kirkland_Manholes-3103	113.84	31.2	1.83	8	PVC	0.01	953	18	107	125	13.1	SM10	
CO-97	Kirkland_Manholes-517	138.64	Kirkland_Manholes-3103	113.84	358.5	6.92	8	PVC	0.01	1,854	1	8	9	0.5	SM10	
CO-98	Kirkland_Manholes-3196	122.5	Kirkland_Manholes-503	118	198.4	2.27	8	PVC	0.01	1,062	3	16	20	1.9	SM10	
CO-100	Kirkland_Manholes-503	118	Kirkland_Manholes-504	108.24	276.3	3.53	8	PVC	0.01	1,325	4	25	29	2.2	SM14-Ex-EX78	
CO-101	Kirkland_Manholes-504	108.24	Kirkland_Manholes-510	78.8	269.3	10.93	8	PVC	0.01	2,331	5	33	38	1.6	SM14-Ex-EX78	
CO-102	Kirkland_Manholes-2573	298.95	Kirkland_Manholes-2572	298.88	17.9	0.4	8	PVC	0.01	446	2	16	19	4.2		
CO-103	Kirkland_Manholes-2959	355.76	Kirkland_Manholes-2572	298.88	327.6	17.36	8	PVC	0.01	2,938	1	4	5	0.2		
CO-104	Kirkland_Manholes-2783	269.77	Kirkland_Manholes-2784	262.56	166.7	4.32	8	PVC	0.01	1,466	7	41	47	3.2		
CO-105	Kirkland_Manholes-2578	278.46	Kirkland_Manholes-2783	269.77	170.6	5.09	8	PVC	0.01	1,591	6	37	43	2.7		
CO-106	Kirkland_Manholes-2921	73.76	Kirkland_Manholes-2920	63.77	70.3	14.2	8	PVC	0.01	2,657	3	17	21	0.8		
CO-107	Kirkland_Manholes-2920	63.77	Kirkland_Manholes-177	35.5	126.7	22.31	8		0.012	2,775	4	22	26	0.9		
CO-109	Kirkland_Manholes-2881	265.95	Kirkland_Manholes-1221	265	237.1	0.4	8	PVC	0.01	446	2	6	8	1.9	SM14-Ex-EX90	
CO-110	Kirkland_Manholes-2686	221.84	Kirkland_Manholes-2690	217.58	240.3	1.77	8	PVC	0.01	939	12	33	44	4.7	SM14-Ex-EX201	
CO-111	Kirkland_Manholes-2690	217.58	Kirkland_Manholes-2691	211.09	233.1	2.78	8	PVC	0.01	1,176	13	37	49	4.2	SM14-Ex-EX201	
CO-112	Kirkland_Manholes-2612	250.12	Kirkland_Manholes-2613	203.91	357.8	12.91	8	PVC	0.01	2,534	4	8	12	0.5	SM14-Ex-EX297	
CO-113	Kirkland_Manholes-2613	203.91	Kirkland_Manholes-3164	171.21	256.4	12.76	8	PVC	0.01	2,518	7	12	19	0.8	SM14-Ex-EX297	
CO-114	Kirkland_Manholes-488	256.69	Kirkland_Manholes-489	206.41	218.5	23.01	8	PVC	0.01	3,382	2	4	6	0.2		
CO-115	Kirkland_Manholes-834	245.56	Kirkland_Manholes-489	206.41	278.5	14.06	8	PVC	0.01	2,644	2	4	6	0.2		
CO-116	Kirkland_Manholes-599	92.8	Kirkland_Manholes-600	91.95	330.6	0.26	8	PVC	0.01	357	15	16	32	8.8	SM14-Ex-EX160	
CO-120	Kirkland_Manholes-601	92.05	Kirkland_Manholes-602	90.22	280.5	0.65	8	PVC	0.01	569	12	16	28	4.9	SM14-Ex-EX160	
CO-123	Kirkland_Manholes-603	94.89	Kirkland_Manholes-604	92.41	322.7	0.77	8	PVC	0.01	618	2	4	6	1	SM14-Ex-EX160	
CO-124	Kirkland_Manholes-594	105.16	Kirkland_Manholes-595	103.44	177	0.97	12	PVC	0.01	2,049	1	8	10	0.5	SM14-Ex-EX116	
CO-125	MH-321	218.02	MH-322	217.7	80.6	0.4	8	PVC	0.01	446	2	4	6	1.3		
CO-126	MH-322	217.7	Kirkland_Manholes-2446	217.36	85	0.4	8	PVC	0.01	446	2	8	11	2.4		
CO-127	MH-315	235.18	MH-316	235.06	29.4	0.41	6	Concrete	0.013	161	1	4	5	3.1		
CO-128	MH-316	235.06	Kirkland_Manholes-2602	234.19	216.7	0.4	8	PVC	0.01	446	2	8	10	2.2	SM14-Ex-EX300	
CO-130	MH-330	93.13	Kirkland_Manholes-601	92.05	270.2	0.4	8	PVC	0.01	446	1	8	9	2	SM14-Ex-EX160	
CO-133	Kirkland_Manholes-2269	398.2	Kirkland_Manholes-2266	392.8	346.8	1.56	8	PVC	0.01	880	22	106	128	14.5	SM14-Ex-EX261	
CO-139	Kirkland_Manholes-2703	250.19	MH-333	250.73	32.9	1.64	8	PVC	0.01	904	3	12	15	1.7		
CO-140	MH-333	250.73	MH-334	252.1	150.3	0.91	8	PVC	0.01	673	2	8	10	1.4		
CO-141	MH-334	252.1	MH-335	253.55	221.6	0.65	8	PVC	0.01	570	1	4	5	0.9		
CO-142	Kirkland_Manholes-2881	265.95	Kirkland_Manholes-1214	261.31	224.5	2.07	8	PVC	0.01	1,013	2	6	8	0.8	SM14-Ex-EX90	
CO-143	Kirkland_Manholes-2593	284.96	Kirkland_Manholes-2604	283.17	324.7	0.55	8	PVC	0.01	524	27	94	0	0	SM14-Ex-EX299	
CO-148	Kirkland_Manholes-603	94.89	Kirkland_Manholes-602	90.22	228.3	2.05	8	PVC	0.01	1,008	2	4	6	0.6	SM14-Ex-EX160	
CO-149	MH-336	98.65	Kirkland_Manholes-276	92.16	227.3	2.86	8	PVC	0.01	1,191	0	3	3	0.3	SM10	
CO-150	MH-337	92.45	Kirkland_Manholes-279	76.14	213.9	7.63	8	PVC	0.01	1,947	0	3	3	0.2	SM10	
CO-151	MH-338	119.57	Kirkland_Manholes-308	114.39	316.2	1.64	8	PVC	0.01	902	0	9	9	1	SM10	
CO-152	MH-339	159.67	Kirkland_Manholes-524	157.52	274.1	0.78	8	PVC	0.01	624	0	8	8	1.3	SM10	
CO-154	MH_Selection_06-13-2016-11	20.6	O-26	20.25	45	0.78	48	Concrete	0.013	56,862	1,784	4,225	7,760	13.6		Updated per as-built drawings
KC_Main-2	KC_Manholes-18	10.29	KC_Manholes-19	10.24	10.1	0.5	24	PVC	0.01	9,299	807	2,054	2,933	31.5	SM14-Ex-EX289	
KC_Main-28	KC_Manholes-19	10.24	O-6	10	47.9	0.5	24	PVC	0.01	9,344	862	2,060	2,994	32	SM14-Ex-EX289	
Kirkland_Main-1	Kirkland_Manholes-2	142.59	Kirkland_Manholes-3	141.09	316.3	0.47	8	PVC	0.01	486	0	1	1	0.3		
Kirkland_Main-2	Kirkland_Manholes-4	139.47	Kirkland_Manholes-5	138.65	146.8	0.56	8	PVC	0.01	527	16	4	21	3.9		
Kirkland_Main-3	Kirkland_Manholes-3	141.09	Kirkland_Manholes-4	139.47	325.9	0.5	8	PVC	0.01	497	16	3	19	3.8		
Kirkland_Main-4	Kirkland_Manholes-6	127.8	Kirkland_Manholes-7	127.07	145	0.5	8	PVC	0.01	500	17	7	25	4.9		

2021 (6-year) with Proposed Improvements - Peak Hour Flow - Pipe Capacity Table

Label	Upstream Node	Upstream Invert Elevation (ft)	Downstream Node	Downstream Invert Elevation (ft)	Length (ft)	Slope (%)	Diameter (in)	Material	Manning's n	Design Capacity (gpm)	Domestic Flow (gpm)	I/I Flow (gpm)	Total Flow (gpm)	Percent Full (%)	CIP No.	Notes
Kirkland_Main-5	Kirkland_Manholes-5	138.65	Kirkland_Manholes-6	127.8	166.2	6.53	8	PVC	0.01	1,801	17	6	22	1.2		
Kirkland_Main-6	Kirkland_Manholes-8	108.29	Kirkland_Manholes-9	99.39	204.3	4.36	8	PVC	0.01	1,471	18	12	30	2.1		
Kirkland_Main-7	Kirkland_Manholes-7	127.07	Kirkland_Manholes-8	108.29	154	12.2	8	PVC	0.01	2,462	18	10	29	1.2		
Kirkland_Main-8	Kirkland_Manholes-9	99.39	Kirkland_Manholes-99	74.09	252.3	10.03	8	PVC	0.01	2,233	65	13	79	3.5		
Kirkland_Main-10	Kirkland_Manholes-10	249.23	Kirkland_Manholes-11	247.5	365.2	0.47	8	PVC	0.01	485	1	4	5	1		
Kirkland_Main-11	Kirkland_Manholes-11	247.5	Kirkland_Manholes-12	246.57	355.7	0.26	8	PVC	0.01	360	3	8	11	3		
Kirkland_Main-12	Kirkland_Manholes-12	246.57	Kirkland_Manholes-650	246.28	73.5	0.4	8	PVC	0.01	446	6	12	18	4		
Kirkland_Main-13	Kirkland_Manholes-13	266.08	Kirkland_Manholes-917	265.16	206.5	0.45	8	PVC	0.01	471	0	4	4	0.9		
Kirkland_Main-14	Kirkland_Manholes-14	260.99	Kirkland_Manholes-15	248.41	274.7	4.58	8	PVC	0.01	1,509	1	4	5	0.3		
Kirkland_Main-15	Kirkland_Manholes-16	249.63	Kirkland_Manholes-15	248.41	56	2.18	8	PVC	0.01	1,041	18	77	95	9.2		
Kirkland_Main-16	Kirkland_Manholes-17	247.29	Kirkland_Manholes-650	246.28	284.1	0.36	8	PVC	0.01	420	22	90	111	26.5		
Kirkland_Main-17	Kirkland_Manholes-3034	97.65	Kirkland_Manholes-3033	93.75	20	19.51	8	PVC	0.01	3,114	0	4	5	0.2		
Kirkland_Main-18	Kirkland_Manholes-3033	93.75	Kirkland_Manholes-3032	86.58	55.1	13.01	8	PVC	0.01	2,543	0	9	9	0.4		
Kirkland_Main-19	Kirkland_Manholes-3032	86.58	Kirkland_Manholes-22	82.71	39.7	9.76	8	PVC	0.01	2,202	0	13	13	0.6		
Kirkland_Main-20	Kirkland_Manholes-22	82.71	Kirkland_Manholes-1	73.25	125.9	7.51	8	PVC	0.01	1,932	1	17	18	0.9		
Kirkland_Main-21	Kirkland_Manholes-15	248.41	Kirkland_Manholes-17	247.29	382.5	0.29	8	PVC	0.01	382	19	85	105	27.4		
Kirkland_Main-22	Kirkland_Manholes-18	254.35	Kirkland_Manholes-16	249.63	106.2	4.45	8	PVC	0.01	1,487	17	73	90	6		
Kirkland_Main-23	Kirkland_Manholes-19	254.88	Kirkland_Manholes-18	254.35	102.4	0.52	8	PVC	0.01	507	16	69	85	16.7		
Kirkland_Main-24	Kirkland_Manholes-23	269.98	Kirkland_Manholes-19	254.88	324.5	4.65	8	PVC	0.01	1,521	1	4	5	0.4		
Kirkland_Main-25	Kirkland_Manholes-622	255	Kirkland_Manholes-19	254.88	84.5	0.14	8	PVC	0.01	266	14	61	75	28.1		
Kirkland_Main-26	Kirkland_Manholes-624	257.73	Kirkland_Manholes-623	256.4	95.1	1.4	8	PVC	0.01	834	1	4	5	0.6		
Kirkland_Main-27	Kirkland_Manholes-623	256.4	Kirkland_Manholes-622	255	306.3	0.46	8	PVC	0.01	477	2	8	10	2.2		
Kirkland_Main-28	Kirkland_Manholes-625	258	Kirkland_Manholes-622	255	179.1	1.67	8	PVC	0.01	912	11	49	60	6.5		
Kirkland_Main-29	Kirkland_Manholes-28	182.96	Kirkland_Manholes-29	182.79	41.4	0.4	8	PVC	0.01	446	4	4	8	1.9		
Kirkland_Main-30	Kirkland_Manholes-29	182.79	Kirkland_Manholes-25	175.02	121.6	6.39	8	PVC	0.01	1,783	19	43	62	3.5		
Kirkland_Main-31	Kirkland_Manholes-36	251.25	Kirkland_Manholes-35	222.04	280.7	10.41	8	PVC	0.01	2,275	3	4	7	0.3		
Kirkland_Main-32	Kirkland_Manholes-35	222.04	Kirkland_Manholes-34	221.71	82.5	0.4	8	PVC	0.01	446	5	9	13	3		
Kirkland_Main-33	Kirkland_Manholes-34	221.71	Kirkland_Manholes-32	220.36	300.4	0.45	8	PVC	0.01	473	6	13	19	4.1		
Kirkland_Main-34	Kirkland_Manholes-32	220.36	Kirkland_Manholes-33	219.84	21.3	2.44	8	PVC	0.01	1,102	7	17	25	2.2		
Kirkland_Main-35	Kirkland_Manholes-33	219.84	Kirkland_Manholes-31	218.88	40.1	2.39	8	PVC	0.01	1,091	8	22	30	2.7		
Kirkland_Main-36	Kirkland_Manholes-37	238.46	Kirkland_Manholes-31	218.88	419.9	4.66	8	PVC	0.01	1,523	2	4	7	0.4		
Kirkland_Main-37	Kirkland_Manholes-31	218.88	Kirkland_Manholes-30	193.77	330.5	7.6	8	PVC	0.01	1,943	11	30	41	2.1		
Kirkland_Main-38	Kirkland_Manholes-30	193.77	Kirkland_Manholes-29	182.79	147.1	7.46	8	PVC	0.01	1,926	14	35	49	2.5		
Kirkland_Main-39	Kirkland_Manholes-40	185.88	Kirkland_Manholes-41	184.86	116.1	0.88	8	PVC	0.01	661	0	9	9	1.4		
Kirkland_Main-40	Kirkland_Manholes-41	184.86	Kirkland_Manholes-38	173.18	108.4	10.78	8	PVC	0.01	2,314	1	13	14	0.6		
Kirkland_Main-41	Kirkland_Manholes-39	193.85	Kirkland_Manholes-40	185.88	407	1.96	8	PVC	0.01	987	0	4	4	0.4		
Kirkland_Main-42	Kirkland_Manholes-54	66.84	Kirkland_Manholes-103	59.75	133.4	5.31	8	PVC	0.01	1,625	41	156	197	12.1	SM14-Ex-EX13	
Kirkland_Main-43	Kirkland_Manholes-47	192.83	Kirkland_Manholes-48	169.78	343.8	6.71	8	PVC	0.01	1,826	2	4	6	0.3	SM14-Ex-EX13	
Kirkland_Main-44	Kirkland_Manholes-48	169.78	Kirkland_Manholes-49	164.6	338.4	1.53	8	PVC	0.01	872	3	9	12	1.4	SM14-Ex-EX13	
Kirkland_Main-45	Kirkland_Manholes-49	164.6	Kirkland_Manholes-50	161.4	179.7	1.78	8	PVC	0.01	941	26	112	139	14.7	SM14-Ex-EX13	
Kirkland_Main-46	Kirkland_Manholes-50	161.4	Kirkland_Manholes-51	157.39	303.6	1.32	8	PVC	0.01	810	28	117	144	17.8	SM14-Ex-EX13	
Kirkland_Main-47	Kirkland_Manholes-51	157.39	Kirkland_Manholes-52	124.84	333.7	9.75	8	PVC	0.01	2,202	30	121	151	6.8	SM14-Ex-EX13	
Kirkland_Main-48	Kirkland_Manholes-59	155.25	Kirkland_Manholes-58	153.05	131	1.68	8	PVC	0.01	914	1	4	6	0.6	SM14-Ex-EX14	
Kirkland_Main-49	Kirkland_Manholes-58	153.05	Kirkland_Manholes-57	140.82	263.2	4.65	8	PVC	0.01	1,520	2	9	11	0.7	SM14-Ex-EX14	
Kirkland_Main-50	Kirkland_Manholes-57	140.82	Kirkland_Manholes-56	112.82	272.1	10.29	8	PVC	0.01	2,262	5	13	18	0.8	SM14-Ex-EX14	
Kirkland_Main-51	Kirkland_Manholes-56	112.82	Kirkland_Manholes-55	79.92	269.4	12.21	8	PVC	0.01	2,464	7	17	25	1	SM14-Ex-EX14	
Kirkland_Main-52	Kirkland_Manholes-55	79.92	Kirkland_Manholes-54	66.84	152.2	8.59	8	PVC	0.01	2,067	9	22	31	1.5	SM14-Ex-EX14	
Kirkland_Main-53	Kirkland_Manholes-52	124.84	Kirkland_Manholes-53	83.26	336	12.38	8	PVC	0.01	2,480	32	125	157	6.3	SM14-Ex-EX13	
Kirkland_Main-54	Kirkland_Manholes-53	83.26	Kirkland_Manholes-54	66.84	148.1	11.08	8	PVC	0.01	2,347	32	130	162	6.9	SM14-Ex-EX13	
Kirkland_Main-55	Kirkland_Manholes-62	222.28	Kirkland_Manholes-63	216.98	205.6	2.58	8	PVC	0.01	1,132	2	4	6	0.6		
Kirkland_Main-56	Kirkland_Manholes-63	216.98	Kirkland_Manholes-60	215.88	80.7	1.36	8	PVC	0.01	823	2	9	11	1.3		
Kirkland_Main-57	Kirkland_Manholes-60	215.88	Kirkland_Manholes-61	215.72	40.6	0.4	8	PVC	0.01	446	3	13	16	3.6		Drop Connection
Kirkland_Main-58	Kirkland_Manholes-65	199.61	Kirkland_Manholes-66	186.65	326.2	3.97	8	PVC	0.01	1,405	13	39	51	3.7	SM14-Ex-EX6	
Kirkland_Main-59	Kirkland_Manholes-66	186.65	Kirkland_Manholes-67	185.01	47	3.49	8	PVC	0.01	1,317	43	104	146	11.1	SM14-Ex-EX17	
Kirkland_Main-61	Kirkland_Manholes-72	160.29	Kirkland_Manholes-70	152.59	265.8	2.9	8	PVC	0.01	1,200	2	4	6	0.5	SM14-Ex-EX15	
Kirkland_Main-62	Kirkland_Manholes-985	205.92	Kirkland_Manholes-986	204.38	192.7	0.8	8	PVC	0.01	630	43	138	182	28.8	SM14-Ex-EX3	
Kirkland_Main-63	Kirkland_Manholes-242	21.02	Kirkland_Manholes-2761	12.79	68	12.1	8	PVC	0.01	2,453	70	268	338	13.8		
Kirkland_Main-64	Kirkland_Manholes-1033	173.21	Kirkland_Manholes-450	130.07	239	18.05	8	PVC	0.01	2,996	5	13	18	0.6		
Kirkland_Main-65	Kirkland_Manholes-71	153	Kirkland_Manholes-70	152.59	153.6	0.27	8	PVC	0.01	364	1	4	6	1.5	SM14-Ex-EX16	
Kirkland_Main-66	Kirkland_Manholes-69	159.19	Kirkland_Manholes-70	152.59	340.9	1.94	8	PVC	0.01	981	4	9	13	1.3	SM14-Ex-EX16	
Kirkland_Main-67	Kirkland_Manholes-68	178.61	Kirkland_Manholes-69	159.19	346.1	5.61	8	PVC	0.01	1,670	2	4	6	0.4	SM14-Ex-EX16	
Kirkland_Main-68	Kirkland_Manholes-73	249.05	Kirkland_Manholes-74	244.74	143	3.01	8	PVC	0.01	1,224	0	4	5	0.4		

2021 (6-year) with Proposed Improvements - Peak Hour Flow - Pipe Capacity Table

Label	Upstream Node	Upstream Invert Elevation (ft)	Downstream Node	Downstream Invert Elevation (ft)	Length (ft)	Slope (%)	Diameter (in)	Material	Manning's n	Design Capacity (gpm)	Domestic Flow (gpm)	I/I Flow (gpm)	Total Flow (gpm)	Percent Full (%)	CIP No.	Notes
Kirkland_Main-69	Kirkland_Manholes-77	217.04	Kirkland_Manholes-78	207.46	342.9	2.79	8	PVC	0.01	1,178	10	22	31	2.7	SM14-Ex-EX7	
Kirkland_Main-70	Kirkland_Manholes-76	225.56	Kirkland_Manholes-77	217.04	294.1	2.9	8	PVC	0.01	1,200	6	17	23	1.9	SM14-Ex-EX7	
Kirkland_Main-71	Kirkland_Manholes-75	235.08	Kirkland_Manholes-76	225.56	281.9	3.38	8	PVC	0.01	1,296	3	13	16	1.3	SM14-Ex-EX7	
Kirkland_Main-72	Kirkland_Manholes-74	244.74	Kirkland_Manholes-75	235.08	281.2	3.44	8	PVC	0.01	1,307	2	9	11	0.8	SM14-Ex-EX7	
Kirkland_Main-75	Kirkland_Manholes-79	197.48	Kirkland_Manholes-66	186.65	235.2	4.6	8	PVC	0.01	1,513	28	61	88	5.8	SM14-Ex-EX17	
Kirkland_Main-76	Kirkland_Manholes-78	207.46	Kirkland_Manholes-79	197.48	229.3	4.35	8	PVC	0.01	1,471	26	56	82	5.6	SM14-Ex-EX17	
Kirkland_Main-78	Kirkland_Manholes-46	167.44	Kirkland_Manholes-43	166.66	144	0.54	8	PVC	0.01	519	0	9	9	1.7	SM14-Ex-EX5	
Kirkland_Main-79	Kirkland_Manholes-43	166.66	Kirkland_Manholes-44	166.02	96.1	0.67	8	PVC	0.01	575	22	91	112	19.5	SM14-Ex-EX5	
Kirkland_Main-80	Kirkland_Manholes-45	166.8	Kirkland_Manholes-44	166.02	115.5	0.68	8	PVC	0.01	579	0	4	4	0.7	SM14-Ex-EX5	
Kirkland_Main-81	Kirkland_Manholes-27	172.24	Kirkland_Manholes-26	167.35	165.4	2.96	8	PVC	0.01	1,212	2	22	24	2	SM14-Ex-EX5	
Kirkland_Main-82	Kirkland_Manholes-26	167.35	Kirkland_Manholes-43	166.66	133.3	0.52	8	PVC	0.01	507	21	78	99	19.6	SM14-Ex-EX5	
Kirkland_Main-84	Kirkland_Manholes-38	173.18	Kirkland_Manholes-27	172.24	235.8	0.4	8	PVC	0.01	446	2	17	19	4.3	SM14-Ex-EX5	
Kirkland_Main-85	Kirkland_Manholes-24	172.7	Kirkland_Manholes-26	167.35	274.1	1.95	8	PVC	0.01	985	19	52	71	7.2	SM14-Ex-EX5	
Kirkland_Main-86	Kirkland_Manholes-42	173.4	Kirkland_Manholes-46	167.44	195.7	3.04	8	PVC	0.01	1,230	0	4	4	0.4	SM14-Ex-EX5	
Kirkland_Main-87	Kirkland_Manholes-25	175.02	Kirkland_Manholes-24	172.7	94.4	2.46	8	PVC	0.01	1,105	19	48	67	6	SM14-Ex-EX5	
Kirkland_Main-88	Kirkland_Manholes-44	166.02	Kirkland_Manholes-49	164.6	321.6	0.44	8	PVC	0.01	469	22	100	121	25.8	SM14-Ex-EX5	
Kirkland_Main-90	Kirkland_Manholes-81	88.9	Kirkland_Manholes-143	71.16	340.9	5.2	8	PVC	0.01	1,608	2	4	6	0.4		
Kirkland_Main-91	Kirkland_Manholes-70	152.59	Kirkland_Manholes-82	150.35	263.6	0.85	8	PVC	0.01	650	8	22	30	4.6	SM14-Ex-EX15	
Kirkland_Main-92	Kirkland_Manholes-85	147.38	Kirkland_Manholes-84	141.87	73.4	7.51	8	PVC	0.01	1,932	4	9	12	0.6	SM14-Ex-EX24	
Kirkland_Main-93	Kirkland_Manholes-83	157.35	Kirkland_Manholes-85	147.38	229.6	4.34	8	PVC	0.01	1,469	2	4	6	0.4	SM14-Ex-EX24	
Kirkland_Main-95	Kirkland_Manholes-82	150.35	Kirkland_Manholes-86	148.26	180.8	1.16	8	PVC	0.01	758	10	26	36	4.7	SM14-Ex-EX15	
Kirkland_Main-96	Kirkland_Manholes-87	163.95	Kirkland_Manholes-147	139.14	319.7	7.76	8	PVC	0.01	1,964	45	112	158	8	SM14-Ex-EX25	
Kirkland_Main-97	Kirkland_Manholes-67	185.01	Kirkland_Manholes-87	163.95	332	6.34	8	PVC	0.01	1,776	43	108	151	8.5	SM14-Ex-EX25	
Kirkland_Main-98	Kirkland_Manholes-88	192.85	Kirkland_Manholes-89	177.59	273.6	5.58	8	PVC	0.01	1,665	2	4	6	0.4	SM14-Ex-EX26	
Kirkland_Main-99	Kirkland_Manholes-90	174.66	Kirkland_Manholes-91	170.09	87.7	5.21	8	PVC	0.01	1,609	1	4	5	0.3	SM14-Ex-EX27	
Kirkland_Main-100	Kirkland_Manholes-92	172.99	Kirkland_Manholes-91	170.09	82	3.53	8	PVC	0.01	1,325	1	4	5	0.4	SM14-Ex-EX27	
Kirkland_Main-101	Kirkland_Manholes-91	170.09	Kirkland_Manholes-152	157.79	45.8	26.87	8	PVC	0.01	3,654	3	13	16	0.4	SM14-Ex-EX27	Slope verified in as-builts
Kirkland_Main-103	Kirkland_Manholes-98	253.76	Kirkland_Manholes-97	241.6	353.8	3.44	8	PVC	0.01	1,307	3	4	7	0.6	SM14-Ex-EX8	
Kirkland_Main-104	Kirkland_Manholes-2944	250.07	Kirkland_Manholes-2943	249.65	93.4	0.45	8	PVC	0.01	473	0	4	4	0.9		
Kirkland_Main-105	Kirkland_Manholes-97	241.6	Kirkland_Manholes-95	228.66	356.1	3.63	8	PVC	0.01	1,344	6	9	15	1.1	SM14-Ex-EX8	
Kirkland_Main-106	Kirkland_Manholes-95	228.66	Kirkland_Manholes-96	228	106.1	0.62	8	PVC	0.01	556	8	13	21	3.8	SM14-Ex-EX8	
Kirkland_Main-107	Kirkland_Manholes-96	228	Kirkland_Manholes-93	223.12	245.5	1.99	8	PVC	0.01	994	9	17	26	2.6	SM14-Ex-EX8	
Kirkland_Main-108	Kirkland_Manholes-93	223.12	Kirkland_Manholes-94	210.17	176.3	7.35	8	PVC	0.01	1,911	11	22	32	1.7	SM14-Ex-EX8	
Kirkland_Main-109	Kirkland_Manholes-94	210.17	Kirkland_Manholes-78	207.46	295.3	0.92	8	PVC	0.01	675	14	30	44	6.5	SM14-Ex-EX17	
Kirkland_Main-110	Kirkland_Manholes-1024	212.11	Kirkland_Manholes-94	210.17	143.5	1.35	8	PVC	0.01	820	2	4	6	0.7	SM14-Ex-EX17	
Kirkland_Main-111	Kirkland_Manholes-106	44.49	Kirkland_Manholes-242	21.02	301.2	7.79	8	PVC	0.01	1,968	53	212	265	13.5	SM14-Ex-EX12	
Kirkland_Main-112	Kirkland_Manholes-105	48.51	Kirkland_Manholes-106	44.49	358.2	1.12	8	PVC	0.01	747	51	208	259	34.7	SM14-Ex-EX12	
Kirkland_Main-113	Kirkland_Manholes-103	59.75	Kirkland_Manholes-105	48.51	350.5	3.21	8	PVC	0.01	1,263	50	203	253	20.1	SM14-Ex-EX12	
Kirkland_Main-114	Kirkland_Manholes-104	60.14	Kirkland_Manholes-103	59.75	61	0.64	8	PVC	0.01	564	9	43	52	9.3		
Kirkland_Main-115	Kirkland_Manholes-102	61.04	Kirkland_Manholes-104	60.14	158.9	0.57	8	PVC	0.01	531	8	39	47	8.9		
Kirkland_Main-116	Kirkland_Manholes-101	61.95	Kirkland_Manholes-102	61.04	98.7	0.92	8	PVC	0.01	676	8	35	43	6.3		
Kirkland_Main-117	Kirkland_Manholes-99	74.09	O-41	72.48	38.5	4.19	8	PVC	0.01	1,443	74	15	89	6.1		
Kirkland_Main-119	Kirkland_Manholes-107	262.65	Kirkland_Manholes-2737	259.86	239.4	1.17	8	PVC	0.01	761	3	4	7	0.9		
Kirkland_Main-120	Kirkland_Manholes-109	325.4	Kirkland_Manholes-110	324.77	37.7	1.67	8	PVC	0.01	912	13	53	67	7.3		
Kirkland_Main-121	Kirkland_Manholes-110	324.77	Kirkland_Manholes-111	324	11.2	6.85	8	PVC	0.01	1,846	21	76	97	5.2		
Kirkland_Main-122	Kirkland_Manholes-108	326.5	Kirkland_Manholes-109	325.4	336.7	0.33	8	PVC	0.01	403	11	30	41	10.3		
Kirkland_Main-123	Kirkland_Manholes-112	326.56	Kirkland_Manholes-110	324.77	134.2	1.33	8	PVC	0.01	814	7	15	22	2.7		
Kirkland_Main-124	Kirkland_Manholes-113	357.54	Kirkland_Manholes-112	326.56	558	5.55	8	PVC	0.01	1,661	5	8	12	0.7		
Kirkland_Main-125	Kirkland_Manholes-134	351.46	Kirkland_Manholes-835	347	314.9	1.42	8	PVC	0.01	839	2	4	6	0.7		Drop Connection
Kirkland_Main-126	Kirkland_Manholes-128	355.4	Kirkland_Manholes-127	354	128.2	1.09	8	PVC	0.01	737	2	4	6	0.8		
Kirkland_Main-127	Kirkland_Manholes-127	354	Kirkland_Manholes-126	343.91	279.9	3.6	8	PVC	0.01	1,339	3	8	11	0.8		
Kirkland_Main-128	Kirkland_Manholes-126	343.91	Kirkland_Manholes-125	337.71	240.8	2.58	8	PVC	0.01	1,131	5	12	17	1.5		
Kirkland_Main-129	Kirkland_Manholes-125	337.71	Kirkland_Manholes-838	337.31	98.6	0.41	8	PVC	0.01	449	7	16	23	5.2		
Kirkland_Main-130	Kirkland_Manholes-129	356.73	Kirkland_Manholes-130	350.77	205.5	2.9	8	PVC	0.01	1,201	3	4	7	0.6	SM14-Ex-EX32	
Kirkland_Main-131	Kirkland_Manholes-130	350.77	Kirkland_Manholes-131	322.01	184.9	15.56	8	PVC	0.01	2,781	4	8	12	0.4		
Kirkland_Main-132	Kirkland_Manholes-133	323.35	Kirkland_Manholes-131	322.01	242.6	0.55	8	PVC	0.01	524	29	73	102	19.5		
Kirkland_Main-133	Kirkland_Manholes-842	324.88	Kirkland_Manholes-133	323.35	209.8	0.73	8	PVC	0.01	602	27	69	96	16		
Kirkland_Main-134	Kirkland_Manholes-131	322.01	Kirkland_Manholes-132	319.83	182.3	1.2	8	PVC	0.01	771	34	85	120	15.5		
Kirkland_Main-135	Kirkland_Manholes-132	319.83	Kirkland_Manholes-116	315.23	159	2.89	8	PVC	0.01	1,199	36	90	125	10.5		
Kirkland_Main-136	Kirkland_Manholes-115	335.3	Kirkland_Manholes-116	315.23	256.3	7.83	8	PVC	0.01	1,973	3	8	187	9.5		
Kirkland_Main-137	Kirkland_Manholes-114	360.4	Kirkland_Manholes-115	335.3	252.2	9.95	8	PVC	0.01	2,224	1	4	6	0.2		
Kirkland_Main-138	Kirkland_Manholes-1806	38.89	Kirkland_Manholes-2926	31.46	54.5	13.64	8	PVC	0.01	2,604	98	311	409	15.7	SM4	

2021 (6-year) with Proposed Improvements - Peak Hour Flow - Pipe Capacity Table

Label	Upstream Node	Upstream Invert Elevation (ft)	Downstream Node	Downstream Invert Elevation (ft)	Length (ft)	Slope (%)	Diameter (in)	Material	Manning's n	Design Capacity (gpm)	Domestic Flow (gpm)	I/I Flow (gpm)	Total Flow (gpm)	Percent Full (%)	CIP No.	Notes
Kirkland_Main-139	Kirkland_Manholes-2926	31.46	Kirkland_Manholes-1396	27.46	24.1	16.61	8	PVC	0.01	2,873	98	319	418	14.5	SM4	
Kirkland_Main-140	Kirkland_Manholes-123	328.2	Kirkland_Manholes-124	326.1	151.9	1.38	8	PVC	0.01	829	2	8	10	1.2		
Kirkland_Main-141	Kirkland_Manholes-124	326.1	Kirkland_Manholes-109	325.4	313.3	0.22	8	PVC	0.01	333	2	15	18	5.3		
Kirkland_Main-142	Kirkland_Manholes-122	345.33	Kirkland_Manholes-108	326.5	238.6	7.89	8	PVC	0.01	1,981	11	23	34	1.7		
Kirkland_Main-143	Kirkland_Manholes-120	360.7	Kirkland_Manholes-121	358.16	294.2	0.86	8	PVC	0.01	655	4	8	12	1.8		
Kirkland_Main-144	Kirkland_Manholes-121	358.16	Kirkland_Manholes-122	345.33	387.6	3.31	8	PVC	0.01	1,283	7	15	22	1.7		
Kirkland_Main-145	Kirkland_Manholes-119	359.58	Kirkland_Manholes-118	354.26	105.6	5.04	8	PVC	0.01	1,583	1	4	5	0.3		
Kirkland_Main-146	Kirkland_Manholes-118	354.26	Kirkland_Manholes-117	315.69	251.8	15.32	8	PVC	0.01	2,760	2	8	11	0.4		
Kirkland_Main-147	Kirkland_Manholes-117	315.69	Kirkland_Manholes-116	315.23	331.8	0.14	8	PVC	0.01	263	3	12	15	5.8		
Kirkland_Main-148	Kirkland_Manholes-116	315.23	Kirkland_Manholes-137	298.8	246.4	6.67	8	PVC	0.01	1,821	43	114	333	18.3		
Kirkland_Main-149	Kirkland_Manholes-137	298.8	Kirkland_Manholes-1076	298.68	103.3	0.12	12	PVC	0.01	709	46	122	344	48.6	SM14-Ex-EX23	
Kirkland_Main-150	Kirkland_Manholes-138	300.28	Kirkland_Manholes-137	298.8	187.2	0.79	8	PVC	0.01	627	2	4	6	1		
Kirkland_Main-151	Kirkland_Manholes-135	297.13	Kirkland_Manholes-136	295.76	244.5	0.56	8	PVC	0.01	528	2	4	6	1.2		
Kirkland_Main-152	Kirkland_Manholes-136	295.76	Kirkland_Manholes-1064	278.57	324.4	5.3	8	PVC	0.01	1,623	4	8	12	0.7		
Kirkland_Main-154	Kirkland_Manholes-139	305.82	Kirkland_Manholes-1078	305.14	98	0.69	8	PVC	0.01	587	1	4	5	0.9		
Kirkland_Main-156	Kirkland_Manholes-140	281.69	Kirkland_Manholes-141	277.32	84.7	5.16	8	PVC	0.01	1,601	1	4	5	0.3		
Kirkland_Main-157	Kirkland_Manholes-141	277.32	Kirkland_Manholes-142	276.94	95.7	0.4	8	PVC	0.01	446	1	8	9	2		Drop Connection
Kirkland_Main-158	Kirkland_Manholes-142	255.54	Kirkland_Manholes-1090	254.86	50.7	1.34	8	PVC	0.01	817	1	12	13	1.6		
Kirkland_Main-160	Kirkland_Manholes-111	324	TREND_WETWELL	317.75	16.6	37.69	8	PVC	0.01	4,328	21	84	105	2.4		
Kirkland_Main-161	Kirkland_Manholes-144	88.96	Kirkland_Manholes-146	84.42	39.5	11.5	8	PVC	0.01	2,391	7	17	24	1		
Kirkland_Main-162	Kirkland_Manholes-86	148.26	Kirkland_Manholes-157	123.36	221.1	11.26	8	PVC	0.01	2,366	11	30	41	1.7	SM14-Ex-EX15	
Kirkland_Main-163	Kirkland_Manholes-84	141.87	Kirkland_Manholes-155	126.86	190.9	7.86	8	PVC	0.01	1,977	5	13	18	0.9	SM14-Ex-EX24	
Kirkland_Main-164	Kirkland_Manholes-156	125.08	Kirkland_Manholes-157	123.36	264.1	0.65	8	PVC	0.01	569	7	22	29	5.1	SM14-Ex-EX24	
Kirkland_Main-165	Kirkland_Manholes-157	123.36	Kirkland_Manholes-158	121.97	144.6	0.96	8	PVC	0.01	691	19	56	75	10.9	SM14-Ex-EX15	
Kirkland_Main-166	Kirkland_Manholes-147	139.14	Kirkland_Manholes-148	138.62	289.8	0.18	8	PVC	0.01	299	48	117	164	55.1	SM14-Ex-EX25	
Kirkland_Main-167	Kirkland_Manholes-148	138.62	Kirkland_Manholes-149	122.95	57.1	27.47	8	PVC	0.01	3,695	48	121	169	4.6	SM14-Ex-EX25	
Kirkland_Main-168	Kirkland_Manholes-149	122.95	Kirkland_Manholes-150	116.05	168.5	4.1	8	PVC	0.01	1,427	48	125	174	12.2	SM14-Ex-EX25	
Kirkland_Main-169	Kirkland_Manholes-153	130.01	Kirkland_Manholes-150	116.05	56.4	24.77	8	PVC	0.01	3,509	5	17	23	0.6	SM14-Ex-EX26	
Kirkland_Main-170	Kirkland_Manholes-150	116.05	Kirkland_Manholes-159	80.68	226.3	15.63	8	PVC	0.01	2,788	59	169	227	8.2	SM14-Ex-EX28	
Kirkland_Main-171	Kirkland_Manholes-151	132.11	Kirkland_Manholes-150	116.05	132.2	12.15	8	PVC	0.01	2,458	4	22	25	1	SM14-Ex-EX27	
Kirkland_Main-172	Kirkland_Manholes-152	157.79	Kirkland_Manholes-151	132.11	148.9	17.25	8	PVC	0.01	2,928	3	17	20	0.7	SM14-Ex-EX27	
Kirkland_Main-173	Kirkland_Manholes-174	143.33	Kirkland_Manholes-153	130.01	57.7	23.09	8	PVC	0.01	3,388	5	13	18	0.5	SM14-Ex-EX26	
Kirkland_Main-174	Kirkland_Manholes-89	177.59	Kirkland_Manholes-174	143.33	179.4	19.1	8	PVC	0.01	3,081	4	9	13	0.4	SM14-Ex-EX26	
Kirkland_Main-175	Kirkland_Manholes-155	126.86	Kirkland_Manholes-156	125.08	248.1	0.72	8	PVC	0.01	597	5	17	23	3.8	SM14-Ex-EX24	
Kirkland_Main-176	Kirkland_Manholes-158	121.97	Kirkland_Manholes-160	41.73	324.9	24.69	8	PVC	0.01	3,504	21	61	81	2.3	SM14-Ex-EX15	
Kirkland_Main-177	Kirkland_Manholes-160	41.73	Kirkland_Manholes-175	34.4	159.3	4.6	8	PVC	0.01	1,512	22	65	87	5.7	SM14-Ex-EX15	
Kirkland_Main-178	Kirkland_Manholes-168	22.33	Kirkland_Manholes-166	21.44	221.6	0.4	8	PVC	0.01	446	1	4	6	1.3		
Kirkland_Main-179	Kirkland_Manholes-165	60.59	Kirkland_Manholes-166	21.44	398.8	9.82	8	PVC	0.01	2,209	1	4	6	0.3		
Kirkland_Main-180	Kirkland_Manholes-166	21.44	Kirkland_Manholes-167	21.4	9.5	0.4	8	PVC	0.01	445	3	13	16	3.5		Drop Connection
Kirkland_Main-181	Kirkland_Manholes-143	71.16	Kirkland_Manholes-164	59.16	83.9	14.3	8	PVC	0.01	2,666	15	48	63	2.3		
Kirkland_Main-182	Kirkland_Manholes-146	84.42	Kirkland_Manholes-143	71.16	154.2	8.6	8	PVC	0.01	2,067	12	39	51	2.5		
Kirkland_Main-183	Kirkland_Manholes-163	106.36	Kirkland_Manholes-146	84.42	161.9	13.55	8	PVC	0.01	2,596	5	17	22	0.9		
Kirkland_Main-184	Kirkland_Manholes-161	132.09	Kirkland_Manholes-162	124.37	152	5.08	8	PVC	0.01	1,589	4	9	12	0.8		
Kirkland_Main-185	Kirkland_Manholes-162	124.37	Kirkland_Manholes-163	106.36	185.8	9.69	8	PVC	0.01	2,195	4	13	17	0.8		
Kirkland_Main-186	Kirkland_Manholes-169	21.92	Kirkland_Manholes-167	19.46	234.8	1.05	18	PVC	0.01	6,274	392	1,116	1,508	24	SM3	
Kirkland_Main-187	Kirkland_Manholes-170	23.23	Kirkland_Manholes-169	21.92	100.1	1.31	18	PVC	0.01	7,012	389	1,099	1,488	21.2	SM3	
Kirkland_Main-188	Kirkland_Manholes-2762	13.1	Kirkland_Manholes-2761	12.79	196.5	0.16	36	PVC	0.01	15,458	554	1,577	2,432	15.7	SM14-Ex-EX10	
Kirkland_Main-189	Kirkland_Manholes-173	34.1	Kirkland_Manholes-172	31.43	44.6	5.99	8	PVC	0.01	1,725	3	13	16	0.9		
Kirkland_Main-190	Kirkland_Manholes-178	67.04	Kirkland_Manholes-179	37.91	174.4	16.71	8	PVC	0.01	2,882	5	9	13	0.5		
Kirkland_Main-191	Kirkland_Manholes-154	101.95	Kirkland_Manholes-178	67.04	253.3	13.78	8	PVC	0.01	2,617	3	4	7	0.3		
Kirkland_Main-192	Kirkland_Manholes-188	58.06	Kirkland_Manholes-187	54.23	46.2	8.28	15	PVC	0.01	10,848	273	671	944	8.7	SM14-Ex-EX30	
Kirkland_Main-193	Kirkland_Manholes-187	54.23	Kirkland_Manholes-185	53.13	306	0.36	36	PVC	0.01	23,331	274	675	949	4.1	SM14-Ex-EX30	
Kirkland_Main-194	Kirkland_Manholes-159	80.68	Kirkland_Manholes-186	56.15	205.5	11.94	8	PVC	0.01	2,436	60	173	233	9.5	SM14-Ex-EX28	
Kirkland_Main-195	Kirkland_Manholes-189	57.91	Kirkland_Manholes-186	56.15	258.6	0.68	8	PVC	0.01	582	2	4	6	1	SM14-Ex-EX29	
Kirkland_Main-196	Kirkland_Manholes-186	56.15	Kirkland_Manholes-185	53.13	48.4	6.24	12	PVC	0.01	5,193	63	182	244	4.7	SM14-Ex-EX28	
Kirkland_Main-197	Kirkland_Manholes-185	53.13	Kirkland_Manholes-183	41.05	170.7	7.08	15	PVC	0.01	10,026	337	861	1,198	11.9	SM14-Ex-EX30	
Kirkland_Main-198	Kirkland_Manholes-182	53.5	Kirkland_Manholes-181	38.4	151.6	9.96	8	PVC	0.01	2,225	1	4	6	0.3		
Kirkland_Main-199	Kirkland_Manholes-314	150.22	Kirkland_Manholes-315	148.46	139.8	1.26	8	PVC	0.01	791	0	4	4	0.5		
Kirkland_Main-200	Kirkland_Manholes-315	148.46	Kirkland_Manholes-316	147.8	125.4	0.53	8	PVC	0.01	512	0	9	9	1.7		
Kirkland_Main-201	Kirkland_Manholes-316	147.8	Kirkland_Manholes-317	146.79	246.9	0.41	12	PVC	0.01	1,330	143	320	463	34.8	SM14-Ex-EX30	
Kirkland_Main-202	Kirkland_Manholes-1205	19.63	Kirkland_Manholes-1850	19.39	404.6	0.06	8	PVC	0.01	172	1	6	7	4.2	SM10	
Kirkland_Main-203	Kirkland_Manholes-1187	22.69	Kirkland_Manholes-1188	22.09	184.7	0.32	12	PVC	0.01	1,185	1	9	9	0.8	SM14-Ex-EX37	

2021 (6-year) with Proposed Improvements - Peak Hour Flow - Pipe Capacity Table

Label	Upstream Node	Upstream Invert Elevation (ft)	Downstream Node	Downstream Invert Elevation (ft)	Length (ft)	Slope (%)	Diameter (in)	Material	Manning's n	Design Capacity (gpm)	Domestic Flow (gpm)	I/I Flow (gpm)	Total Flow (gpm)	Percent Full (%)	CIP No.	Notes
Kirkland_Main-204	Kirkland_Manholes-1188	22.09	Kirkland_Manholes-1189	21.99	127.3	0.08	12	PVC	0.01	583	2	18	20	3.4	SM14-Ex-EX37	
Kirkland_Main-205	Kirkland_Manholes-1189	21.99	Kirkland_Manholes-1202	18.39	139.2	2.59	12	PVC	0.01	3,343	3	27	30	0.9	SM14-Ex-EX37	
Kirkland_Main-206	Kirkland_Manholes-1202	18.39	Kirkland_Manholes-1203	18.22	388.5	0.04	12	PVC	0.01	435	6	35	41	9.4	SM14-Ex-EX37	
Kirkland_Main-207	Kirkland_Manholes-1203	18.22	Kirkland_Manholes-1204	17.89	122.5	0.27	12	PVC	0.01	1,079	6	44	51	4.7	SM14-Ex-EX37	
Kirkland_Main-208	Kirkland_Manholes-1204	17.89	Kirkland_Manholes-516	17.69	304.6	0.07	12	PVC	0.01	533	8	53	61	11.5	SM14-Ex-EX37	
Kirkland_Main-209	Kirkland_Manholes-1197	181.82	Kirkland_Manholes-1196	172.3	310.3	3.07	8		0.012	1,029	4	41	45	4.4		
Kirkland_Main-210	Kirkland_Manholes-1196	172.3	Kirkland_Manholes-1195	162.64	327.7	2.95	8		0.012	1,009	4	49	54	5.3		
Kirkland_Main-211	Kirkland_Manholes-1195	162.64	Kirkland_Manholes-1190	151.12	307.8	3.74	8		0.012	1,137	5	58	62	5.5		
Kirkland_Main-212	Kirkland_Manholes-1190	151.12	Kirkland_Manholes-1405	132.7	345	5.34	8		0.012	1,358	6	74	80	5.9		
Kirkland_Main-213	Kirkland_Manholes-1191	345.24	Kirkland_Manholes-1192	340.89	127.3	3.42	6	Vitrified Clay	0.013	465	16	4	20	4.2		
Kirkland_Main-214	Kirkland_Manholes-1192	340.89	Kirkland_Manholes-1193	318.62	250.8	8.88	6	Vitrified Clay	0.013	750	67	8	76	10.1		
Kirkland_Main-215	Kirkland_Manholes-1193	318.62	Kirkland_Manholes-1194	312.16	165.2	3.91	6	Vitrified Clay	0.013	498	67	12	80	16		
Kirkland_Main-216	Kirkland_Manholes-1194	312.16	Kirkland_Manholes-1212	307.51	140.5	3.31	6	Concrete	0.013	458	67	16	84	18.3		
Kirkland_Main-217	Kirkland_Manholes-1146	215.3	Kirkland_Manholes-500	209.24	317	1.91	8	PVC	0.01	975	14	49	64	6.5	SM4	
Kirkland_Main-218	Kirkland_Manholes-1225	212.63	Kirkland_Manholes-1147	194.47	343.1	5.29	8	PVC	0.01	1,622	2	8	10	0.6	SM14-Ex-EX88	
Kirkland_Main-219	Kirkland_Manholes-500	209.24	Kirkland_Manholes-1147	194.47	315.3	4.68	8	PVC	0.01	1,526	20	66	86	5.7	SM4	
Kirkland_Main-220	Kirkland_Manholes-1149	192.13	Kirkland_Manholes-1148	179.25	269.3	4.78	8	PVC	0.01	1,542	20	64	84	5.4	SM14-Ex-EX89	
Kirkland_Main-221	Kirkland_Manholes-1147	194.47	Kirkland_Manholes-1148	179.25	319	4.77	8	PVC	0.01	1,540	25	82	107	6.9	SM4	
Kirkland_Main-222	Kirkland_Manholes-1148	179.25	Kirkland_Manholes-1796	160.8	313.7	5.88	8	PVC	0.01	1,710	47	155	201	11.8	SM4	
Kirkland_Main-223	Kirkland_Manholes-1171	160.49	Kirkland_Manholes-1150	151.79	210.3	4.14	8	PVC	0.01	1,434	11	41	53	3.7	SM10	
Kirkland_Main-224	Kirkland_Manholes-1129	164.28	Kirkland_Manholes-1128	162.57	73.5	2.33	8	PVC	0.01	1,075	0	4	4	0.4	SM14-Ex-EX4	
Kirkland_Main-225	Kirkland_Manholes-1111	165.6	O-8	165.51	22.8	0.4	8	PVC	0.01	446	1	8	9	2		
Kirkland_Main-227	Kirkland_Manholes-197	50.1	Kirkland_Manholes-196	49.03	107.3	1	8	PVC	0.01	704	8	35	43	6.1	SM14-Ex-EX43	
Kirkland_Main-228	Kirkland_Manholes-196	49.03	Kirkland_Manholes-195	48.03	74.6	1.34	8	PVC	0.01	816	9	39	48	5.9	SM14-Ex-EX43	
Kirkland_Main-229	Kirkland_Manholes-740	221.28	Kirkland_Manholes-711	219.85	98.7	1.45	8	PVC	0.01	849	10	4	14	1.7		
Kirkland_Main-230	Kirkland_Manholes-1107	164.79	O-9	160.2	26.3	17.47	8	PVC	0.01	2,947	0	8	8	0.3	SM14-Ex-EX21	
Kirkland_Main-231	Kirkland_Manholes-1106	168.9	O-10	168.5	24.6	1.64	18	PVC	0.01	7,851	692	2,173	2,865	36.5		Drop Connection
Kirkland_Main-232	Kirkland_Manholes-1118	200.71	Kirkland_Manholes-1117	196.58	128.3	3.22	8	PVC	0.01	1,265	2	4	6	0.5		
Kirkland_Main-233	Kirkland_Manholes-1115	186.39	Kirkland_Manholes-1114	181.51	185.2	2.63	15	PVC	0.01	6,118	21	16	37	0.6		
Kirkland_Main-234	Kirkland_Manholes-1114	181.51	Kirkland_Manholes-1113	180.6	148.4	0.61	15	PVC	0.01	2,952	38	20	59	2		
Kirkland_Main-235	Kirkland_Manholes-1143	203.09	Kirkland_Manholes-1144	194	101.9	8.92	8	PVC	0.01	2,105	1	8	9	0.4	SM14-Ex-EX82	
Kirkland_Main-236	Kirkland_Manholes-1144	194	Kirkland_Manholes-1145	190.6	30.2	11.26	8	PVC	0.01	2,366	1	16	18	0.7		
Kirkland_Main-237	Kirkland_Manholes-1145	190.6	Kirkland_Manholes-1211	186.99	174.5	2.07	8	PVC	0.01	1,014	4	25	28	2.8		
Kirkland_Main-238	Kirkland_Manholes-1184	19.39	Kirkland_Manholes-1185	19.29	139.1	0.07	12	PVC	0.01	557	32	177	209	37.5	SM14-Ex-EX37	
Kirkland_Main-239	Kirkland_Manholes-1183	19.89	Kirkland_Manholes-1184	19.39	178.8	0.28	12	PVC	0.01	1,099	30	168	198	18.1	SM14-Ex-EX37	
Kirkland_Main-242	Kirkland_Manholes-1131	191.56	Kirkland_Manholes-1200	169.25	277.8	8.03	8	PVC	0.01	1,998	18	41	59	2.9	SM14-Ex-EX63	
Kirkland_Main-243	Kirkland_Manholes-1200	169.25	Kirkland_Manholes-1201	159.96	155.1	5.99	8	PVC	0.01	1,726	21	45	66	3.8	SM14-Ex-EX62	
Kirkland_Main-244	Kirkland_Manholes-1201	159.96	Kirkland_Manholes-1182	159	65	1.48	8	PVC	0.01	857	22	50	72	8.4	SM14-Ex-EX62	
Kirkland_Main-245	Kirkland_Manholes-1182	159	Kirkland_Manholes-529	155.16	83.2	4.62	8	PVC	0.01	1,515	23	54	77	5.1	SM14-Ex-EX62	If flow exceeds capacity, overflow MH will be activated; model appropriately.
Kirkland_Main-246	Kirkland_Manholes-529	155.16	Kirkland_Manholes-527	146.55	210.2	4.1	8	PVC	0.01	1,427	23	58	81	5.7	SM10	
Kirkland_Main-247	Kirkland_Manholes-516	17.69	Kirkland_Manholes-2958	17.19	310.2	0.16	12	PVC	0.01	835	9	62	71	8.5	SM14-Ex-EX37	
Kirkland_Main-248	Kirkland_Manholes-318	146.51	Kirkland_Manholes-2957	145.86	162.1	0.4	12	PVC	0.01	1,315	143	329	471	35.9	SM14-Ex-EX30	
Kirkland_Main-249	Kirkland_Manholes-2957	145.86	Kirkland_Manholes-426	144.6	315.5	0.4	12	PVC	0.01	1,315	147	333	480	36.5	SM14-Ex-EX30	
Kirkland_Main-251	Kirkland_Manholes-524	157.52	Kirkland_Manholes-525	156.27	278.3	0.45	8	PVC	0.01	473	2	16	18	3.9	SM10	
Kirkland_Main-253	Kirkland_Manholes-2932	327.56	Kirkland_Manholes-2931	326.77	30	2.63	8	PVC	0.01	1,144	3	24	28	2.4		
Kirkland_Main-254	Kirkland_Manholes-2931	326.77	Kirkland_Manholes-2930	326.38	131.8	0.3	8	PVC	0.01	384	4	28	33	8.5		
Kirkland_Main-255	Kirkland_Manholes-2930	326.38	Kirkland_Manholes-878	325.66	147.9	0.49	8	PVC	0.01	492	5	33	37	7.6		
Kirkland_Main-257	Kirkland_Manholes-2345	343.84	Kirkland_Manholes-2343	315.2	169.5	16.9	8	PVC	0.01	2,898	7	20	28	1	SM14-Ex-EX255	
Kirkland_Main-258	Kirkland_Manholes-2344	315.75	Kirkland_Manholes-2343	315.2	137.3	0.4	8	PVC	0.01	446	7	12	19	4.3	SM14-Ex-EX254	
Kirkland_Main-259	Kirkland_Manholes-2256	329.88	Kirkland_Manholes-2344	315.75	334.7	4.22	8	PVC	0.01	1,449	4	8	12	0.8	SM14-Ex-EX254	
Kirkland_Main-261	Kirkland_Manholes-2346	349.24	Kirkland_Manholes-2345	343.84	323.2	1.67	8	PVC	0.01	911	2	4	6	0.7	SM14-Ex-EX255	
Kirkland_Main-262	Kirkland_Manholes-2347	359.76	Kirkland_Manholes-2345	343.84	158.1	10.07	8	PVC	0.01	2,237	3	12	15	0.7	SM14-Ex-EX255	
Kirkland_Main-263	Kirkland_Manholes-2348	314.6	Kirkland_Manholes-2334	313.34	224.3	0.56	8	PVC	0.01	528	16	41	56	10.7	SM14-Ex-EX254	
Kirkland_Main-264	Kirkland_Manholes-2350	364.04	Kirkland_Manholes-2347	359.76	357	1.2	8	PVC	0.01	772	1	4	5	0.6	SM14-Ex-EX255	
Kirkland_Main-265	Kirkland_Manholes-2351	360.37	Kirkland_Manholes-2347	359.76	181.2	0.34	8	PVC	0.01	409	1	4	5	1.3	SM14-Ex-EX255	
Kirkland_Main-266	Kirkland_Manholes-2352	284.5	Kirkland_Manholes-2259	272.05	240.1	5.18	8	PVC	0.01	1,605	0	4	5	0.3	SM14-Ex-EX250	
Kirkland_Main-267	Kirkland_Manholes-2353	298.2	Kirkland_Manholes-2332	296.43	253	0.7	8	PVC	0.01	590	2	4	6	1.1	SM14-Ex-EX253	
Kirkland_Main-268	Kirkland_Manholes-2355	240.55	Kirkland_Manholes-2124	217.78	364.4	6.25	12	PVC	0.01	5,196	308	903	1,211	23.3	SM14-Ex-EX248	
Kirkland_Main-269	Kirkland_Manholes-2354	256.04	Kirkland_Manholes-2355	240.55	281.2	5.51	12	PVC	0.01	4,879	305	899	1,204	24.7	SM14-Ex-EX248	
Kirkland_Main-270	Kirkland_Manholes-2357	271.18	Kirkland_Manholes-2354	256.04	199.4	7.59	8	PVC	0.01	1,943	3	8	11	0.6	SM14-Ex-EX249	
Kirkland_Main-271	Kirkland_Manholes-2258	263.77	Kirkland_Manholes-2354	256.04	150.5	5.14	12	PVC	0.01	4,711	301	887	1,188	25.2	SM14-Ex-EX248	

2021 (6-year) with Proposed Improvements - Peak Hour Flow - Pipe Capacity Table

Label	Upstream Node	Upstream Invert Elevation (ft)	Downstream Node	Downstream Invert Elevation (ft)	Length (ft)	Slope (%)	Diameter (in)	Material	Manning's n	Design Capacity (gpm)	Domestic Flow (gpm)	I/I Flow (gpm)	Total Flow (gpm)	Percent Full (%)	CIP No.	Notes
Kirkland_Main-272	Kirkland_Manholes-2356	278.21	Kirkland_Manholes-2357	271.18	149.2	4.71	8	PVC	0.01	1,530	1	4	6	0.4		
Kirkland_Main-273	Kirkland_Manholes-2324	245.37	Kirkland_Manholes-2420	230.11	227.1	6.72	8	PVC	0.01	1,828	45	151	196	10.7		
Kirkland_Main-274	Kirkland_Manholes-2358	262.09	Kirkland_Manholes-2412	260.78	357.3	0.37	8	PVC	0.01	427	4	8	12	2.9		
Kirkland_Main-275	Kirkland_Manholes-2359	271.5	Kirkland_Manholes-2358	262.09	128.6	7.32	8	PVC	0.01	1,907	2	4	6	0.3		
Kirkland_Main-276	Kirkland_Manholes-2362	285.37	Kirkland_Manholes-2360	266.1	385.1	5	8	PVC	0.01	1,577	21	61	82	5.2		
Kirkland_Main-277	Kirkland_Manholes-2360	266.1	Kirkland_Manholes-2411	259.15	259.9	2.67	8	PVC	0.01	1,153	23	65	88	7.6		
Kirkland_Main-278	Kirkland_Manholes-2361	291.01	Kirkland_Manholes-2362	285.37	28	20.16	8	PVC	0.01	3,166	3	8	12	0.4		
Kirkland_Main-279	Kirkland_Manholes-2371	291.2	Kirkland_Manholes-2362	285.37	123.7	4.71	8	PVC	0.01	1,530	17	49	66	4.3		
Kirkland_Main-280	Kirkland_Manholes-2363	291.88	Kirkland_Manholes-2361	291.01	353	0.25	8	PVC	0.01	350	2	4	6	1.7		
Kirkland_Main-281	Kirkland_Manholes-2364	284.3	Kirkland_Manholes-2429	273.52	255	4.23	8	PVC	0.01	1,450	30	94	123	8.5	SM14-Ex-EX260	
Kirkland_Main-282	Kirkland_Manholes-2382	327.1	Kirkland_Manholes-2369	315.99	220.4	5.04	8	PVC	0.01	1,583	3	4	7	0.4		
Kirkland_Main-283	Kirkland_Manholes-2369	315.99	Kirkland_Manholes-2370	312.97	65.7	4.59	8	PVC	0.01	1,511	25	69	94	6.3	SM14-Ex-EX260	
Kirkland_Main-284	Kirkland_Manholes-2383	328.5	Kirkland_Manholes-2369	315.99	277.1	4.51	8	PVC	0.01	1,498	21	61	82	5.5	SM14-Ex-EX260	
Kirkland_Main-285	Kirkland_Manholes-2370	312.97	Kirkland_Manholes-2367	295.27	303.5	5.83	8	PVC	0.01	1,703	26	73	99	5.8	SM14-Ex-EX260	
Kirkland_Main-286	Kirkland_Manholes-2365	289.93	Kirkland_Manholes-2364	284.3	103.6	5.44	8	PVC	0.01	1,644	29	90	118	7.2	SM14-Ex-EX260	
Kirkland_Main-287	Kirkland_Manholes-2367	295.27	Kirkland_Manholes-2366	292.68	34.9	7.43	8	PVC	0.01	1,921	27	77	104	5.4	SM14-Ex-EX260	
Kirkland_Main-288	Kirkland_Manholes-181	38.4	Kirkland_Manholes-180	38.25	24	0.62	8	PVC	0.01	555	2	13	15	2.6		
Kirkland_Main-289	Kirkland_Manholes-184	40.15	Kirkland_Manholes-181	38.4	362.3	0.48	8	PVC	0.01	490	0	4	5	0.9		
Kirkland_Main-290	Kirkland_Manholes-180	38.25	Kirkland_Manholes-179	37.91	155.1	0.22	18	PVC	0.01	2,874	354	960	1,314	45.7	SM3	
Kirkland_Main-291	Kirkland_Manholes-179	37.91	Kirkland_Manholes-177	35.5	248.2	0.97	18	PVC	0.01	6,039	359	973	1,332	22.1	SM3	
Kirkland_Main-292	Kirkland_Manholes-177	35.5	Kirkland_Manholes-176	34.72	401.5	0.19	18	PVC	0.01	2,705	363	999	1,363	50.4	SM3	
Kirkland_Main-293	Kirkland_Manholes-176	34.72	Kirkland_Manholes-175	34.4	144.6	0.22	18	PVC	0.01	2,875	364	1,004	1,367	47.6	SM3	
Kirkland_Main-294	Kirkland_Manholes-175	34.4	Kirkland_Manholes-171	25.99	328.5	2.56	18	PVC	0.01	9,806	385	1,073	1,458	14.9	SM3	
Kirkland_Main-295	Kirkland_Manholes-171	25.99	Kirkland_Manholes-170	25.29	316.1	0.22	18	PVC	0.01	2,875	388	1,095	1,483	51.6	SM3	Drop Connection
Kirkland_Main-296	Kirkland_Manholes-172	31.43	Kirkland_Manholes-171	31.34	21.8	0.4	8	PVC	0.01	446	3	17	20	4.5		Drop Connection
Kirkland_Main-297	Kirkland_Manholes-190	38.49	Kirkland_Manholes-180	38.25	107	0.22	15	PVC	0.01	1,763	352	943	1,295	73.5	SM3	
Kirkland_Main-298	Kirkland_Manholes-183	41.05	Kirkland_Manholes-190	38.49	284.2	0.9	15	PVC	0.01	3,580	352	939	1,290	36	SM3	
Kirkland_Main-299	Kirkland_Manholes-167	19.46	Kirkland_Manholes-241	14.7	339.1	1.4	18	PVC	0.01	7,261	395	1,133	1,529	21.1	SM3	
Kirkland_Main-300	Kirkland_Manholes-164	59.16	Kirkland_Manholes-242	58.15	252.4	0.4	8	PVC	0.01	446	17	52	68	15.4		Drop Connection
Kirkland_Main-301	Kirkland_Manholes-203	83.91	Kirkland_Manholes-202	68.28	127.4	12.27	8	PVC	0.01	2,470	1	4	5	0.2		
Kirkland_Main-302	Kirkland_Manholes-202	68.28	Kirkland_Manholes-204	54.86	133.6	10.05	8	PVC	0.01	2,235	1	9	10	0.4		
Kirkland_Main-303	Kirkland_Manholes-204	54.86	Kirkland_Manholes-169	21.92	184.1	17.89	8	PVC	0.01	2,982	3	13	16	0.5		
Kirkland_Main-304	Kirkland_Manholes-209	226.32	Kirkland_Manholes-210	216.33	137.5	7.27	8	PVC	0.01	1,901	3	4	7	0.4	SM14-Ex-EX66	
Kirkland_Main-306	Kirkland_Manholes-214	228.3	Kirkland_Manholes-213	213.69	210.7	6.93	8	PVC	0.01	1,856	3	4	7	0.4		
Kirkland_Main-307	Kirkland_Manholes-213	213.69	Kirkland_Manholes-212	184.62	186.4	15.59	8	PVC	0.01	2,784	7	9	15	0.5		
Kirkland_Main-308	Kirkland_Manholes-212	184.62	Kirkland_Manholes-216	184.01	222.7	0.27	8	PVC	0.01	369	38	100	137	37.2		
Kirkland_Main-309	Kirkland_Manholes-211	186.37	Kirkland_Manholes-212	184.62	362.4	0.48	8	PVC	0.01	490	29	87	115	23.6		
Kirkland_Main-310	Kirkland_Manholes-210	216.33	Kirkland_Manholes-211	186.37	372.2	8.05	8	PVC	0.01	2,000	6	9	14	0.7	SM14-Ex-EX66	
Kirkland_Main-312	Kirkland_Manholes-216	184.01	Kirkland_Manholes-217	183.22	296	0.27	8	PVC	0.01	364	39	104	143	39.2		
Kirkland_Main-313	Kirkland_Manholes-215	220.47	Kirkland_Manholes-217	183.22	347.3	10.73	8	PVC	0.01	2,309	4	4	9	0.4		
Kirkland_Main-314	Kirkland_Manholes-208	241.09	Kirkland_Manholes-207	240.8	258.2	0.11	8	PVC	0.01	236	4	13	17	7.2	SM14-Ex-EX57	
Kirkland_Main-315	Kirkland_Manholes-207	240.8	Kirkland_Manholes-206	239.08	251.3	0.68	8	PVC	0.01	583	7	17	25	4.2	SM14-Ex-EX57	
Kirkland_Main-316	Kirkland_Manholes-1236	256.67	Kirkland_Manholes-206	239.08	279.5	6.29	8	PVC	0.01	1,769	5	9	14	0.8	SM14-Ex-EX60	
Kirkland_Main-317	Kirkland_Manholes-206	239.08	Kirkland_Manholes-205	228.15	235.6	4.64	8	PVC	0.01	1,519	14	30	44	2.9	SM14-Ex-EX57	
Kirkland_Main-318	Kirkland_Manholes-227	223.31	Kirkland_Manholes-226	219.39	138.6	2.83	8	PVC	0.01	1,186	7	30	37	3.1		
Kirkland_Main-319	Kirkland_Manholes-229	178.29	Kirkland_Manholes-230	172.81	192.8	2.84	8	PVC	0.01	1,189	1	4	5	0.5		
Kirkland_Main-321	Kirkland_Manholes-2569	300.83	Kirkland_Manholes-2570	299.81	42.2	2.42	8	PVC	0.01	1,096	1	4	5	0.5		
Kirkland_Main-323	Kirkland_Manholes-2570	299.81	Kirkland_Manholes-2573	298.95	117.6	0.73	8	PVC	0.01	603	2	12	15	2.4		
Kirkland_Main-325	Kirkland_Manholes-2574	291.72	Kirkland_Manholes-2578	278.46	194.2	6.83	8	PVC	0.01	1,842	6	33	38	2.1		
Kirkland_Main-326	Kirkland_Manholes-2575	296.63	Kirkland_Manholes-2574	291.72	277.7	1.77	8	PVC	0.01	938	5	28	33	3.6		
Kirkland_Main-327	Kirkland_Manholes-2572	298.88	Kirkland_Manholes-2575	296.63	102.9	2.19	8	PVC	0.01	1,042	4	24	28	2.7		
Kirkland_Main-330	Kirkland_Manholes-2576	288.87	Kirkland_Manholes-2577	284.91	171.7	2.31	8	PVC	0.01	1,071	1	4	5	0.5		
Kirkland_Main-331	Kirkland_Manholes-2577	284.91	Kirkland_Manholes-2580	279.25	137.4	4.12	8	PVC	0.01	1,431	2	8	10	0.7		
Kirkland_Main-332	Kirkland_Manholes-2580	279.25	Kirkland_Manholes-2579	271.58	247.7	3.1	8	PVC	0.01	1,241	3	12	15	1.2		
Kirkland_Main-333	Kirkland_Manholes-2582	256.45	Kirkland_Manholes-2583	255.68	58.5	1.32	8	PVC	0.01	809	14	77	92	11.3	SM14-Ex-EX313	
Kirkland_Main-334	Kirkland_Manholes-2583	255.68	Kirkland_Manholes-2584	252.35	54.4	6.12	8	PVC	0.01	1,744	15	81	96	5.5	SM14-Ex-EX313	
Kirkland_Main-335	Kirkland_Manholes-2584	252.35	Kirkland_Manholes-2787	252.17	133.2	0.14	8	PVC	0.01	259	15	85	101	38.8	SM14-Ex-EX313	
Kirkland_Main-336	Kirkland_Manholes-2581	260.74	Kirkland_Manholes-2582	256.45	63.8	6.72	8	PVC	0.01	1,828	5	20	26	1.4		
Kirkland_Main-337	Kirkland_Manholes-2786	258.1	Kirkland_Manholes-2582	256.45	266.6	0.62	8	PVC	0.01	555	9	53	62	11.2		
Kirkland_Main-338	Kirkland_Manholes-2579	271.58	Kirkland_Manholes-2581	260.74	232.4	4.66	8	PVC	0.01	1,523	4	16	20	1.3		
Kirkland_Main-339	Kirkland_Manholes-2586	274.45	Kirkland_Manholes-2585	272.57	43.2	4.35	8	PVC	0.01	1,471	1	8	9	0.6		
Kirkland_Main-340	Kirkland_Manholes-2587	285.24	Kirkland_Manholes-2586	274.45	298.8	3.61	8	PVC	0.01	1,340	1	4	5	0.4		

2021 (6-year) with Proposed Improvements - Peak Hour Flow - Pipe Capacity Table

Label	Upstream Node	Upstream Invert Elevation (ft)	Downstream Node	Downstream Invert Elevation (ft)	Length (ft)	Slope (%)	Diameter (in)	Material	Manning's n	Design Capacity (gpm)	Domestic Flow (gpm)	I/I Flow (gpm)	Total Flow (gpm)	Percent Full (%)	CIP No.	Notes
Kirkland_Main-342	Kirkland_Manholes-2588	292.14	Kirkland_Manholes-2589	286.31	102.9	5.66	8	PVC	0.01	1,678	24	81	105	6.3	SM14-Ex-EX303	
Kirkland_Main-343	Kirkland_Manholes-2591	288.43	Kirkland_Manholes-2589	286.31	198.2	1.07	8	PVC	0.01	729	1	4	5	0.7	SM14-Ex-EX305	
Kirkland_Main-344	Kirkland_Manholes-2590	303.32	Kirkland_Manholes-2588	292.14	220.1	5.08	8	PVC	0.01	1,589	9	45	54	3.4	SM14-Ex-EX303	
Kirkland_Main-345	Kirkland_Manholes-2592	294.57	Kirkland_Manholes-2588	292.14	159.1	1.53	8	PVC	0.01	871	3	8	11	1.2	SM14-Ex-EX306	
Kirkland_Main-346	Kirkland_Manholes-2589	286.31	Kirkland_Manholes-2593	281.14	131.6	3.93	8	PVC	0.01	1,398	27	90	116	8.3	SM14-Ex-EX303	
Kirkland_Main-347	Kirkland_Manholes-2593	281.14	Kirkland_Manholes-2585	272.57	372.5	2.3	8	PVC	0.01	1,069	27	94	121	11.3	SM14-Ex-EX299	
Kirkland_Main-348	Kirkland_Manholes-2585	272.57	Kirkland_Manholes-2595	270.48	180.9	1.16	8	PVC	0.01	758	29	106	135	17.8	SM14-Ex-EX299	
Kirkland_Main-349	Kirkland_Manholes-2595	270.48	Kirkland_Manholes-2594	263.61	407.7	1.68	8	PVC	0.01	915	31	110	141	15.4	SM14-Ex-EX299	
Kirkland_Main-350	Kirkland_Manholes-2594	263.61	Kirkland_Manholes-2601	228.74	402.9	8.65	8	PVC	0.01	2,074	34	114	148	7.1	SM14-Ex-EX299	
Kirkland_Main-352	Kirkland_Manholes-2598	252.13	Kirkland_Manholes-2599	217.5	325.5	10.64	8	PVC	0.01	2,300	3	12	15	0.7	SM14-Ex-EX301	
Kirkland_Main-353	Kirkland_Manholes-2597	256.37	Kirkland_Manholes-2598	252.13	172.1	2.46	8	PVC	0.01	1,107	1	8	9	0.8	SM14-Ex-EX301	
Kirkland_Main-354	Kirkland_Manholes-2596	262.84	Kirkland_Manholes-2597	256.37	380.5	1.7	8	PVC	0.01	919	0	4	4	0.5	SM14-Ex-EX301	
Kirkland_Main-355	Kirkland_Manholes-853	340.38	Kirkland_Manholes-851	339.16	105.8	1.16	8	PVC	0.01	758	0	4	4	0.5		
Kirkland_Main-356	Kirkland_Manholes-851	339.16	Kirkland_Manholes-852	338.63	131.5	0.4	8	PVC	0.01	446	7	37	44	9.8		
Kirkland_Main-357	Kirkland_Manholes-852	338.63	Kirkland_Manholes-854	336.98	245.6	0.67	8	PVC	0.01	578	7	41	48	8.3		
Kirkland_Main-358	Kirkland_Manholes-854	336.98	Kirkland_Manholes-855	335.54	321	0.45	8	PVC	0.01	472	8	45	53	11.2		
Kirkland_Main-359	Kirkland_Manholes-855	335.54	Kirkland_Manholes-857	334.93	126.6	0.48	8	PVC	0.01	489	9	49	57	11.7		
Kirkland_Main-360	Kirkland_Manholes-857	334.93	Kirkland_Manholes-856	333.21	25.3	6.8	8	PVC	0.01	1,838	9	53	62	3.4		
Kirkland_Main-361	Kirkland_Manholes-858	311.1	Kirkland_Manholes-859	309.2	142	1.34	8	PVC	0.01	816	3	4	7	0.8	SM14-Ex-EX51	
Kirkland_Main-362	Kirkland_Manholes-198	52.1	Kirkland_Manholes-197	50.1	250.9	0.8	8	PVC	0.01	630	6	30	37	5.8	SM14-Ex-EX43	
Kirkland_Main-363	Kirkland_Manholes-1648	152.03	Kirkland_Manholes-1649	151.45	206.3	0.28	12	PVC	0.01	1,100	5	33	38	3.4	SM14-Ex-EX196	
Kirkland_Main-364	Kirkland_Manholes-1649	151.45	Kirkland_Manholes-1650	145.43	128.4	4.69	12	PVC	0.01	4,501	8	41	49	1.1	SM14-Ex-EX196	
Kirkland_Main-365	Kirkland_Manholes-1651	160.29	Kirkland_Manholes-1650	145.43	297.8	4.99	8	PVC	0.01	1,575	0	16	17	1.1		
Kirkland_Main-366	Kirkland_Manholes-1652	161.6	Kirkland_Manholes-1651	160.29	197.8	0.66	8	PVC	0.01	574	0	8	9	1.5		
Kirkland_Main-369	Kirkland_Manholes-1654	136.96	Kirkland_Manholes-1653	127.26	270	3.59	8	PVC	0.01	1,336	2	8	10	0.8	SM14-Ex-EX168	
Kirkland_Main-370	Kirkland_Manholes-1653	127.26	Kirkland_Manholes-1767	122.16	112.6	4.53	8	PVC	0.01	1,501	6	16	22	1.5	SM14-Ex-EX168	
Kirkland_Main-372	Kirkland_Manholes-977	225.95	Kirkland_Manholes-978	222.9	113.4	2.69	8	PVC	0.01	1,157	9	48	56	4.9		
Kirkland_Main-374	Kirkland_Manholes-2858	23.78	Kirkland_Manholes-2857	19.7	174.1	2.34	8	PVC	0.01	1,079	0	5	5	0.4	SM14-Ex-EX315	
Kirkland_Main-376	Kirkland_Manholes-2865	30.12	Kirkland_Manholes-2864	27	7.9	39.25	8	PVC	0.01	4,417	14	23	38	0.9	SM14-Ex-EX314	WW Influent Pipe
Kirkland_Main-377	Kirkland_Manholes-2866	31.02	Kirkland_Manholes-2867	30.31	15.5	4.58	8	PVC	0.01	1,509	10	17	27	1.8	SM14-Ex-EX314	
Kirkland_Main-378	Kirkland_Manholes-2867	30.31	Kirkland_Manholes-2865	30.12	118.6	0.16	8	PVC	0.01	282	10	20	30	10.7	SM14-Ex-EX314	
Kirkland_Main-379	Kirkland_Manholes-2863	49.4	Kirkland_Manholes-2866	31.02	310.1	5.93	8	PVC	0.01	1,716	8	13	21	1.2		
Kirkland_Main-380	Kirkland_Manholes-1905	395.5	Kirkland_Manholes-1906	388.2	277.5	2.63	8	PVC	0.01	1,143	11	41	52	4.5		
Kirkland_Main-381	Kirkland_Manholes-1906	388.2	Kirkland_Manholes-1908	383.29	92.4	5.31	8	PVC	0.01	1,625	20	49	69	4.2		
Kirkland_Main-382	Kirkland_Manholes-1908	383.29	Kirkland_Manholes-1909	380	18.3	18.02	8	PVC	0.01	2,993	30	61	91	3		
Kirkland_Main-383	Kirkland_Manholes-1910	392.49	Kirkland_Manholes-1908	383.29	192.6	4.78	8	PVC	0.01	1,541	10	8	18	1.2		
Kirkland_Main-386	Kirkland_Manholes-1911	394.49	Kirkland_Manholes-1910	392.49	114.9	1.74	8	PVC	0.01	930	0	4	4	0.4		
Kirkland_Main-388	Kirkland_Manholes-1912	380.62	Kirkland_Manholes-1907	380.32	64.6	0.46	8	PVC	0.01	480	20	8	28	5.8		
Kirkland_Main-389	Kirkland_Manholes-1913	381.47	Kirkland_Manholes-1912	380.62	181.1	0.47	8	PVC	0.01	483	20	4	24	4.9		
Kirkland_Main-390	Kirkland_Manholes-1915	403.84	Kirkland_Manholes-1903	399.77	113	3.6	8	PVC	0.01	1,338	1	4	5	0.4		
Kirkland_Main-391	Kirkland_Manholes-1914	376.04	Kirkland_Manholes-1916	361.73	343.6	4.16	8	PVC	0.01	1,439	0	4	4	0.3		
Kirkland_Main-392	Kirkland_Manholes-1916	361.73	Kirkland_Manholes-1965	345.05	397.2	4.2	8	PVC	0.01	1,445	33	20	53	3.7		
Kirkland_Main-393	Kirkland_Manholes-1917	413.2	Kirkland_Manholes-1919	411.73	326.8	0.45	12	PVC	0.01	1,394	77	195	272	19.5	SM14-Ex-EX215	
Kirkland_Main-394	Kirkland_Manholes-1918	411.61	Kirkland_Manholes-1920	409.24	389.6	0.61	12	PVC	0.01	1,622	115	366	481	29.7	SM14-Ex-EX215	
Kirkland_Main-395	Kirkland_Manholes-1919	411.73	Kirkland_Manholes-1918	411.61	19.4	0.61	12	PVC	0.01	1,622	79	199	278	17.1	SM14-Ex-EX215	
Kirkland_Main-396	Kirkland_Manholes-1966	418.21	Kirkland_Manholes-1918	411.61	309.4	2.13	8	PVC	0.01	1,030	35	163	198	19.2	SM14-Ex-EX216	
Kirkland_Main-397	Kirkland_Manholes-2018	417.59	Kirkland_Manholes-1920	409.24	266.4	3.13	8	PVC	0.01	1,248	1	4	5	0.4		
Kirkland_Main-398	Kirkland_Manholes-2017	412	Kirkland_Manholes-1921	405.86	284.9	2.16	8	PVC	0.01	1,035	6	20	27	2.6		
Kirkland_Main-399	Kirkland_Manholes-1921	405.86	Kirkland_Manholes-1923	399.87	337.2	1.78	12	PVC	0.01	2,771	125	403	528	19	SM14-Ex-EX215	Drop Connection
Kirkland_Main-400	Kirkland_Manholes-2013	413.74	Kirkland_Manholes-1922	401.71	397	3.03	8	PVC	0.01	1,227	26	98	124	10.1		
Kirkland_Main-401	Kirkland_Manholes-1924	396.12	Kirkland_Manholes-1925	391.68	40.1	11.08	8	PVC	0.01	2,347	5	16	21	0.9		
Kirkland_Main-402	Kirkland_Manholes-2012	406.67	Kirkland_Manholes-1924	396.12	354.7	2.97	8	PVC	0.01	1,216	4	12	16	1.3		
Kirkland_Main-403	Kirkland_Manholes-1926	383.42	Kirkland_Manholes-1927	378.37	328.1	1.54	12	PVC	0.01	2,579	159	541	700	27.2	SM14-Ex-EX205	
Kirkland_Main-404	Kirkland_Manholes-1927	378.37	Kirkland_Manholes-1928	375.97	126.7	1.89	12	PVC	0.01	2,862	159	545	704	24.6	SM14-Ex-EX205	
Kirkland_Main-405	Kirkland_Manholes-1922	401.71	Kirkland_Manholes-3030	397.75	20.7	19.14	8	PVC	0.01	3,085	28	102	130	4.2		
Kirkland_Main-406	Kirkland_Manholes-1923	399.87	Kirkland_Manholes-3030	397.75	24.4	8.7	12	PVC	0.01	6,130	125	407	532	8.7		
Kirkland_Main-407	Kirkland_Manholes-3030	397.75	Kirkland_Manholes-1925	391.68	339.3	1.79	12	PVC	0.01	2,781	153	513	666	23.9		
Kirkland_Main-408	Kirkland_Manholes-1925	391.68	Kirkland_Manholes-3031	384.74	433.2	1.6	12	PVC	0.01	2,631	159	533	692	26.3		
Kirkland_Main-409	Kirkland_Manholes-2750	105.56	Kirkland_Manholes-2749	94.38	64.8	17.26	8	PVC	0.01	2,929	28	6	34	1.1		
Kirkland_Main-410	Kirkland_Manholes-2751	82.43	Kirkland_Manholes-2879	68.04	243.9	5.9	8	PVC	0.01	1,713	0	6	6	0.4	SM14-Ex-EX280	
Kirkland_Main-412	Kirkland_Manholes-373	230.9	Kirkland_Manholes-1080	229.14	244	0.72	8	PVC	0.01	599	72	256	328	54.8		
Kirkland_Main-413	Kirkland_Manholes-195	48.03	Kirkland_Manholes-193	45.46	195.3	1.32	8	PVC	0.01	809	10	43	54	6.6	SM14-Ex-EX43	

2021 (6-year) with Proposed Improvements - Peak Hour Flow - Pipe Capacity Table

Label	Upstream Node	Upstream Invert Elevation (ft)	Downstream Node	Downstream Invert Elevation (ft)	Length (ft)	Slope (%)	Diameter (in)	Material	Manning's n	Design Capacity (gpm)	Domestic Flow (gpm)	I/I Flow (gpm)	Total Flow (gpm)	Percent Full (%)	CIP No.	Notes
Kirkland_Main-414	Kirkland_Manholes-193	45.46	Kirkland_Manholes-192	42.9	32.1	7.96	8	PVC	0.01	1,990	10	48	58	2.9	SM14-Ex-EX43	
Kirkland_Main-415	Kirkland_Manholes-194	50.84	Kirkland_Manholes-192	50.61	58.2	0.4	8	PVC	0.01	446	4	4	8	1.8		Drop Connection
Kirkland_Main-416	Kirkland_Manholes-192	42.9	Kirkland_Manholes-191	42.5	357.1	0.11	8	PVC	0.01	236	14	69	83	35.3	SM14-Ex-EX44	
Kirkland_Main-417	Kirkland_Manholes-191	42.5	Kirkland_Manholes-183	41.05	287.2	0.5	8	PVC	0.01	501	14	74	88	17.5	SM14-Ex-EX44	
Kirkland_Main-418	Kirkland_Manholes-201	56.98	Kirkland_Manholes-192	42.9	368.5	3.82	8	PVC	0.01	1,378	0	13	13	0.9	SM14-Ex-EX43	
Kirkland_Main-419	Kirkland_Manholes-199	54.68	Kirkland_Manholes-198	52.1	112.6	2.29	8	PVC	0.01	1,067	5	26	31	2.9	SM14-Ex-EX43	
Kirkland_Main-420	Kirkland_Manholes-2310	256	Kirkland_Manholes-2738	255.5	66.4	0.75	8	PVC	0.01	612	10	26	36	5.9		
Kirkland_Main-421	Kirkland_Manholes-2738	255.5	Kirkland_Manholes-2752	253.8	209.4	0.81	8	PVC	0.01	635	12	30	42	6.6		
Kirkland_Main-422	Kirkland_Manholes-2754	9.95	O-40	9.81	113.1	0.12	36	PVC	0.01	13,690	625	1,871	2,797	20.4	SM14-Ex-EX10	Drop Connection
Kirkland_Main-423	Kirkland_Manholes-2761	12.79	Kirkland_Manholes-2759	11.56	416.9	0.3	36	PVC	0.01	21,139	624	1,849	2,775	13.1	SM14-Ex-EX10	
Kirkland_Main-425	Kirkland_Manholes-2759	11.56	Kirkland_Manholes-2758	11.2	391.7	0.09	36	PVC	0.01	11,798	624	1,854	2,779	23.6	SM14-Ex-EX10	
Kirkland_Main-426	Kirkland_Manholes-2758	11.2	Kirkland_Manholes-2757	10.95	117.7	0.21	36	PVC	0.01	17,933	625	1,858	2,784	15.5	SM14-Ex-EX10	
Kirkland_Main-428	Kirkland_Manholes-217	183.22	Kirkland_Manholes-230	172.81	258.2	4.03	8	PVC	0.01	1,416	46	112	158	11.2		
Kirkland_Main-429	Kirkland_Manholes-228	142.32	Kirkland_Manholes-232	112.59	208.3	14.27	8	PVC	0.01	2,663	51	130	181	6.8		
Kirkland_Main-430	Kirkland_Manholes-226	219.39	Kirkland_Manholes-225	214.73	200.7	2.32	8	PVC	0.01	1,074	8	35	43	4		
Kirkland_Main-431	Kirkland_Manholes-225	214.73	Kirkland_Manholes-223	193.39	169.1	12.62	8	PVC	0.01	2,505	10	39	49	1.9		
Kirkland_Main-432	Kirkland_Manholes-223	193.39	Kirkland_Manholes-224	189.69	263.2	1.41	8	PVC	0.01	836	21	69	90	10.8		
Kirkland_Main-433	Kirkland_Manholes-222	194.04	Kirkland_Manholes-223	193.39	133.1	0.49	8	PVC	0.01	493	10	26	36	7.3		
Kirkland_Main-434	Kirkland_Manholes-221	194.75	Kirkland_Manholes-222	194.04	121.4	0.58	8	PVC	0.01	539	9	22	31	5.7		
Kirkland_Main-435	Kirkland_Manholes-219	195.26	Kirkland_Manholes-221	194.75	115.1	0.44	8	PVC	0.01	469	8	17	26	5.4		
Kirkland_Main-436	Kirkland_Manholes-220	211.06	Kirkland_Manholes-219	195.26	185.5	8.52	8	PVC	0.01	2,057	5	9	13	0.7		
Kirkland_Main-437	Kirkland_Manholes-218	197.04	Kirkland_Manholes-219	195.26	182.3	0.98	8	PVC	0.01	697	2	4	6	0.9		
Kirkland_Main-438	Kirkland_Manholes-233	215.48	Kirkland_Manholes-220	211.06	169.3	2.61	8	PVC	0.01	1,139	3	4	7	0.6		
Kirkland_Main-439	Kirkland_Manholes-224	189.69	Kirkland_Manholes-211	186.37	292.8	1.13	8	PVC	0.01	751	22	74	95	12.7		
Kirkland_Main-440	Kirkland_Manholes-266	97.98	Kirkland_Manholes-267	95.34	145	1.82	8	PVC	0.01	951	37	84	121	12.7	SM10	If flow exceeds capacity, overflow MH will be activated; model appropriately.
Kirkland_Main-441	Kirkland_Manholes-265	110.6	Kirkland_Manholes-266	97.98	184.6	6.84	8	PVC	0.01	1,844	36	80	115	6.3	SM10	
Kirkland_Main-442	Kirkland_Manholes-262	118.9	Kirkland_Manholes-265	110.6	150.8	5.51	8	PVC	0.01	1,654	34	76	110	6.6	SM10	If flow exceeds capacity, overflow MH will be activated; model appropriately.
Kirkland_Main-443	Kirkland_Manholes-261	130.12	Kirkland_Manholes-262	118.9	278.9	4.02	8	PVC	0.01	1,414	31	71	102	7.2	SM10	
Kirkland_Main-444	Kirkland_Manholes-258	141.4	Kirkland_Manholes-261	130.12	280.6	4.02	8	PVC	0.01	1,414	27	67	94	6.6	SM10	
Kirkland_Main-445	Kirkland_Manholes-527	146.55	Kirkland_Manholes-258	141.4	279.2	1.84	8	PVC	0.01	958	25	63	88	9.2	SM10	
Kirkland_Main-446	Kirkland_Manholes-259	136.12	Kirkland_Manholes-260	130.49	137.7	4.09	8	PVC	0.01	1,426	2	4	6	0.4	SM10	
Kirkland_Main-447	Kirkland_Manholes-260	130.49	Kirkland_Manholes-251	119.87	263.8	4.03	8	PVC	0.01	1,415	3	9	12	0.8	SM10	
Kirkland_Main-448	Kirkland_Manholes-251	119.87	Kirkland_Manholes-250	115.74	110.4	3.74	8	PVC	0.01	1,363	4	13	17	1.2	SM14-Ex-EX55	
Kirkland_Main-449	Kirkland_Manholes-253	121.6	Kirkland_Manholes-254	100.7	323.7	6.46	8	PVC	0.01	1,791	35	78	113	6.3	SM14-Ex-EX40	
Kirkland_Main-450	Kirkland_Manholes-252	142.57	Kirkland_Manholes-253	121.6	327.2	6.41	8	PVC	0.01	1,785	35	74	109	6.1	SM14-Ex-EX40	
Kirkland_Main-451	Kirkland_Manholes-257	165.98	Kirkland_Manholes-252	142.57	284	8.24	8	PVC	0.01	2,024	34	65	99	4.9	SM14-Ex-EX57	
Kirkland_Main-452	Kirkland_Manholes-234	184.45	Kirkland_Manholes-257	165.98	280.4	6.59	8	PVC	0.01	1,810	25	52	76	4.2	SM14-Ex-EX57	
Kirkland_Main-453	Kirkland_Manholes-1133	181.56	Kirkland_Manholes-257	165.98	274.2	5.68	8	PVC	0.01	1,681	8	9	17	1	SM14-Ex-EX58	
Kirkland_Main-454	Kirkland_Manholes-231	144.64	Kirkland_Manholes-236	135.22	190.5	4.95	8	PVC	0.01	1,568	1	4	6	0.4	SM14-Ex-EX56	
Kirkland_Main-455	Kirkland_Manholes-235	144.29	Kirkland_Manholes-236	135.22	77.1	11.76	8	PVC	0.01	2,418	2	4	6	0.2	SM14-Ex-EX56	
Kirkland_Main-456	Kirkland_Manholes-236	135.22	Kirkland_Manholes-237	112.26	221.2	10.38	8	PVC	0.01	2,271	4	13	17	0.7	SM14-Ex-EX56	
Kirkland_Main-457	Kirkland_Manholes-232	112.59	Kirkland_Manholes-237	112.26	229.8	0.14	8	PVC	0.01	267	51	134	185	69.4	SM14-Ex-EX41	
Kirkland_Main-458	Kirkland_Manholes-237	112.26	Kirkland_Manholes-254	100.7	413.4	2.8	8	PVC	0.01	1,179	56	151	208	17.6	SM14-Ex-EX41	
Kirkland_Main-459	Kirkland_Manholes-254	100.7	Kirkland_Manholes-255	81.45	344	5.6	8	PVC	0.01	1,668	92	234	326	19.5	SM14-Ex-EX40	
Kirkland_Main-460	Kirkland_Manholes-249	98.75	Kirkland_Manholes-248	82.01	263.5	6.35	8	PVC	0.01	1,777	1	4	5	0.3	SM14-Ex-EX39	
Kirkland_Main-461	Kirkland_Manholes-255	81.45	Kirkland_Manholes-256	63.52	326.4	5.49	8	PVC	0.01	1,653	94	238	332	20.1	SM14-Ex-EX40	
Kirkland_Main-462	Kirkland_Manholes-256	63.52	Kirkland_Manholes-245	59.23	36.4	11.78	8	PVC	0.01	2,420	95	242	337	13.9	SM14-Ex-EX40	
Kirkland_Main-463	Kirkland_Manholes-248	82.01	Kirkland_Manholes-245	59.23	346.7	6.57	8	PVC	0.01	1,807	2	9	11	0.6	SM14-Ex-EX39	
Kirkland_Main-464	Kirkland_Manholes-245	59.23	Kirkland_Manholes-246	59.12	26.8	0.4	12	PVC	0.01	1,315	98	255	353	26.8	SM14-Ex-EX40	Drop Connection
Kirkland_Main-465	Kirkland_Manholes-247	65.14	Kirkland_Manholes-246	64.57	142.8	0.4	8	PVC	0.01	446	57	145	202	45.3	SM14-Ex-EX38	Drop Connection
Kirkland_Main-466	Kirkland_Manholes-291	21.49	Kirkland_Manholes-290	19.2	13	17.62	12	PVC	0.01	8,726	49	64	113	1.3	SM10	
Kirkland_Main-467	Kirkland_Manholes-290	19.2	ROSEPT_WETWELL	14.96	16.7	25.32	8	PVC	0.01	3,548	59	86	145	4.1	SM10	
Kirkland_Main-468	Kirkland_Manholes-289	31.71	Kirkland_Manholes-287	23.53	51	16.05	8	PVC	0.01	2,825	10	22	33	1.2	SM10	
Kirkland_Main-469	Kirkland_Manholes-288	19.33	Kirkland_Manholes-290	19.2	135.3	0.1	8	PVC	0.01	219	8	19	27	12.5	SM10	
Kirkland_Main-470	Kirkland_Manholes-287	23.53	Kirkland_Manholes-291	21.49	128.7	1.58	8	PVC	0.01	887	49	61	110	12.4	SM10	
Kirkland_Main-471	Kirkland_Manholes-286	24.15	Kirkland_Manholes-287	23.53	96.6	0.64	12	PVC	0.01	1,665	39	35	74	4.5	SM10	
Kirkland_Main-472	Kirkland_Manholes-285	19.59	Kirkland_Manholes-288	19.33	259.3	0.1	8	PVC	0.01	223	8	16	24	10.8	SM10	
Kirkland_Main-473	Kirkland_Manholes-292	22.37	Kirkland_Manholes-293	22.09	126.6	0.22	12	PVC	0.01	967	0	9	9	0.9	SM14-Ex-EX37	
Kirkland_Main-474	Kirkland_Manholes-297	22.86	Kirkland_Manholes-296	21.27	137.3	1.16	8	PVC	0.01	759	2	3	6	0.7	SM14-Ex-EX36	
Kirkland_Main-475	Kirkland_Manholes-296	21.27	Kirkland_Manholes-295	20.59	313.5	0.22	8	PVC	0.01	328	4	6	11	3.3	SM10	

2021 (6-year) with Proposed Improvements - Peak Hour Flow - Pipe Capacity Table

Label	Upstream Node	Upstream Invert Elevation (ft)	Downstream Node	Downstream Invert Elevation (ft)	Length (ft)	Slope (%)	Diameter (in)	Material	Manning's n	Design Capacity (gpm)	Domestic Flow (gpm)	I/I Flow (gpm)	Total Flow (gpm)	Percent Full (%)	CIP No.	Notes
Kirkland_Main-476	Kirkland_Manholes-295	20.59	Kirkland_Manholes-294	20.11	95.2	0.5	8	PVC	0.01	501	5	10	15	3	SM10	
Kirkland_Main-477	Kirkland_Manholes-294	20.11	Kirkland_Manholes-285	19.59	185.3	0.28	8	PVC	0.01	373	7	13	19	5.2	SM10	
Kirkland_Main-478	Kirkland_Manholes-311	21.29	Kirkland_Manholes-312	20.99	124.6	0.24	12	PVC	0.01	1,020	4	35	40	3.9	SM14-Ex-EX37	
Kirkland_Main-479	Kirkland_Manholes-312	20.99	Kirkland_Manholes-306	19.99	281.9	0.35	12	PVC	0.01	1,238	6	44	50	4	SM14-Ex-EX37	
Kirkland_Main-480	Kirkland_Manholes-362	216.81	Kirkland_Manholes-361	216.74	35.2	0.2	21	PVC	0.01	4,142	629	1,982	2,610	63		
Kirkland_Main-481	Kirkland_Manholes-367	213.02	Kirkland_Manholes-368	212.3	160.3	0.45	18	PVC	0.01	4,107	642	2,047	2,688	65.5		
Kirkland_Main-482	Kirkland_Manholes-368	212.3	Kirkland_Manholes-369	208.86	249.4	1.38	18	PVC	0.01	7,198	642	2,051	2,692	37.4		
Kirkland_Main-483	Kirkland_Manholes-369	208.86	Kirkland_Manholes-370	206.64	246.4	0.9	18	PVC	0.01	5,817	656	2,083	2,740	47.1		
Kirkland_Main-484	Kirkland_Manholes-371	213.58	Kirkland_Manholes-2872	207.03	240.7	2.72	8	PVC	0.01	1,163	0	4	4	0.3		
Kirkland_Main-485	Kirkland_Manholes-372	241.98	Kirkland_Manholes-373	230.9	143.8	7.71	8	PVC	0.01	1,957	0	4	5	0.2		
Kirkland_Main-486	Kirkland_Manholes-375	234.87	Kirkland_Manholes-373	230.9	271	1.46	8	PVC	0.01	853	70	248	319	37.3		
Kirkland_Main-487	Kirkland_Manholes-374	244.09	Kirkland_Manholes-375	234.87	143.4	6.43	8	PVC	0.01	1,788	1	4	5	0.3		
Kirkland_Main-488	Kirkland_Manholes-535	472.49	Kirkland_Manholes-536	466.05	355.6	1.81	8	PVC	0.01	949	3	16	19	2		
Kirkland_Main-489	Kirkland_Manholes-536	466.05	Kirkland_Manholes-539	454.38	292.6	3.99	8	PVC	0.01	1,408	5	20	25	1.8		
Kirkland_Main-490	Kirkland_Manholes-537	455.9	Kirkland_Manholes-539	454.38	190.6	0.8	8	PVC	0.01	630	1	4	5	0.8		
Kirkland_Main-491	Kirkland_Manholes-539	454.38	Kirkland_Manholes-540	453.6	170.3	0.46	8	PVC	0.01	477	9	61	70	14.7		
Kirkland_Main-492	Kirkland_Manholes-540	453.6	Kirkland_Manholes-541	450.25	325.9	1.03	8	PVC	0.01	715	10	65	75	10.6		
Kirkland_Main-493	Kirkland_Manholes-538	457.48	Kirkland_Manholes-1977	454.61	403.8	0.71	8	PVC	0.01	594	1	4	5	0.8		
Kirkland_Main-494	Kirkland_Manholes-596	110.91	Kirkland_Manholes-600	91.95	293.8	6.45	8	PVC	0.01	1,791	101	354	455	25.4	SM14-Ex-EX117	
Kirkland_Main-495	Kirkland_Manholes-598	118.14	Kirkland_Manholes-596	110.91	360.7	2	8	PVC	0.01	998	4	8	12	1.2	SM14-Ex-EX159	
Kirkland_Main-496	Kirkland_Manholes-606	111.69	Kirkland_Manholes-614	87.89	289.9	8.21	8	PVC	0.01	2,020	44	165	209	10.3	SM14-Ex-EX96	
Kirkland_Main-497	Kirkland_Manholes-238	85.65	Kirkland_Manholes-239	27.77	394.9	14.66	8	PVC	0.01	2,699	1	4	5	0.2		
Kirkland_Main-502	Kirkland_Manholes-200	55.31	Kirkland_Manholes-199	54.68	46	1.37	8	PVC	0.01	825	4	22	26	3.1		
Kirkland_Main-503	Kirkland_Manholes-2330	295.18	Kirkland_Manholes-263	292.03	86.5	3.64	8	PVC	0.01	1,346	32	98	130	9.7	SM14-Ex-EX252	
Kirkland_Main-504	Kirkland_Manholes-2768	263.56	Kirkland_Manholes-2769	260.32	376.9	0.86	8	PVC	0.01	654	1	4	5	0.8		
Kirkland_Main-505	Kirkland_Manholes-280	27.37	Kirkland_Manholes-286	24.15	372.8	0.86	12	PVC	0.01	1,932	37	29	65	3.4	SM10	
Kirkland_Main-509	Kirkland_Manholes-313	62.05	Kirkland_Manholes-286	24.15	229.1	16.54	8	PVC	0.01	2,868	2	3	5	0.2	SM10	
Kirkland_Main-510	Kirkland_Manholes-804	284.1	Kirkland_Manholes-319	281.98	84.4	2.51	8	PVC	0.01	1,117	9	33	42	3.7		
Kirkland_Main-511	Kirkland_Manholes-319	281.98	Kirkland_Manholes-320	278.6	79.1	4.27	8	PVC	0.01	1,458	10	37	47	3.2		
Kirkland_Main-512	Kirkland_Manholes-320	278.6	Kirkland_Manholes-321	265.74	204.3	6.3	8	PVC	0.01	1,769	11	41	52	2.9		
Kirkland_Main-513	Kirkland_Manholes-321	265.74	Kirkland_Manholes-322	263.88	72.5	2.57	8	PVC	0.01	1,129	12	45	57	5		
Kirkland_Main-514	Kirkland_Manholes-322	263.88	Kirkland_Manholes-323	244.99	177.9	10.62	8	PVC	0.01	2,297	22	77	99	4.3		
Kirkland_Main-515	Kirkland_Manholes-803	278.64	Kirkland_Manholes-322	263.88	141.7	10.41	8	PVC	0.01	2,275	10	28	39	1.7		
Kirkland_Main-516	Kirkland_Manholes-323	244.99	Kirkland_Manholes-324	240.21	186.2	2.57	8	PVC	0.01	1,130	23	81	104	9.2		
Kirkland_Main-517	Kirkland_Manholes-815	248.52	Kirkland_Manholes-324	240.21	137.2	6.05	8	PVC	0.01	1,735	7	20	28	1.6		
Kirkland_Main-518	Kirkland_Manholes-324	240.21	Kirkland_Manholes-325	236.62	39.9	9.01	8	PVC	0.01	2,116	30	106	136	6.4		
Kirkland_Main-519	Kirkland_Manholes-325	236.62	Kirkland_Manholes-327	230.43	89	6.95	8	PVC	0.01	1,859	31	114	145	7.8		
Kirkland_Main-520	Kirkland_Manholes-326	238.6	Kirkland_Manholes-325	236.62	142.9	1.39	8	PVC	0.01	830	0	4	5	0.5		
Kirkland_Main-521	Kirkland_Manholes-327	230.43	Kirkland_Manholes-328	228.68	117.4	1.49	8	PVC	0.01	861	32	118	150	17.4		
Kirkland_Main-522	Kirkland_Manholes-328	228.68	Kirkland_Manholes-329	227.48	172.3	0.7	8	PVC	0.01	588	32	122	154	26.2		
Kirkland_Main-523	Kirkland_Manholes-329	227.48	Kirkland_Manholes-814	224.81	265.5	1.01	8	PVC	0.01	707	34	126	160	22.6		
Kirkland_Main-524	Kirkland_Manholes-335	225.11	Kirkland_Manholes-330	224.74	400.7	0.09	24	PVC	0.01	4,011	583	1,754	2,337	58.3	SM14-2021-DF4	
Kirkland_Main-525	Kirkland_Manholes-330	224.74	Kirkland_Manholes-331	223	199.5	0.87	21	PVC	0.01	8,635	584	1,758	2,342	27.1		
Kirkland_Main-526	Kirkland_Manholes-331	223	Kirkland_Manholes-332	219.57	217.5	1.58	21	PVC	0.01	11,610	584	1,762	2,346	20.2		
Kirkland_Main-527	Kirkland_Manholes-332	219.57	Kirkland_Manholes-334	218.68	182	0.49	21	PVC	0.01	6,464	585	1,766	2,351	36.4		
Kirkland_Main-528	Kirkland_Manholes-333	225.59	Kirkland_Manholes-334	218.68	199.5	3.46	8	PVC	0.01	1,312	39	187	226	17.3		
Kirkland_Main-529	Kirkland_Manholes-352	234.2	Kirkland_Manholes-333	225.59	382.7	2.25	8	PVC	0.01	1,058	38	183	221	20.9		
Kirkland_Main-530	Kirkland_Manholes-334	218.68	Kirkland_Manholes-356	218.57	161	0.07	30	PVC	0.01	6,255	627	1,961	2,588	41.4	SM14-Ex-EX48	
Kirkland_Main-531	Kirkland_Manholes-337	291.09	Kirkland_Manholes-338	268.5	343.3	6.58	8	PVC	0.01	1,809	13	65	78	4.3		
Kirkland_Main-532	Kirkland_Manholes-343	274.46	Kirkland_Manholes-338	268.5	356.6	1.67	8	PVC	0.01	912	2	4	6	0.6		
Kirkland_Main-533	Kirkland_Manholes-338	268.5	Kirkland_Manholes-339	249.19	361.1	5.35	8	PVC	0.01	1,631	17	73	90	5.5		
Kirkland_Main-534	Kirkland_Manholes-1543	289	Kirkland_Manholes-1544	284.46	416.8	1.09	8	PVC	0.01	736	8	20	29	3.9	SM14-Ex-EX123	
Kirkland_Main-535	Kirkland_Manholes-1545	272.4	Kirkland_Manholes-765	257.59	249.5	5.94	8	PVC	0.01	1,718	20	69	89	5.2	SM14-Ex-EX121	
Kirkland_Main-536	Kirkland_Manholes-1571	242.76	Kirkland_Manholes-1572	242.19	318.3	0.18	15	PVC	0.01	1,595	221	456	676	42.4		
Kirkland_Main-537	Kirkland_Manholes-1573	242.13	Kirkland_Manholes-1574	241.8	67.8	0.49	18	PVC	0.01	4,277	221	464	685	16	SM14-Ex-EX133	
Kirkland_Main-538	Kirkland_Manholes-1572	242.19	Kirkland_Manholes-1573	242.13	243.5	0.02	18	PVC	0.01	962	221	460	681	70.7	SM14-Ex-EX133	
Kirkland_Main-539	Kirkland_Manholes-1576	330.99	Kirkland_Manholes-1575	314.42	250.6	6.61	8	PVC	0.01	1,813	4	28	32	1.8		
Kirkland_Main-540	Kirkland_Manholes-1577	341.43	Kirkland_Manholes-1576	330.99	181.7	5.75	8	PVC	0.01	1,690	4	24	28	1.7		
Kirkland_Main-541	Kirkland_Manholes-1578	344.66	Kirkland_Manholes-1577	341.43	47.3	6.83	8	PVC	0.01	1,843	1	4	5	0.3		
Kirkland_Main-542	Kirkland_Manholes-1579	359.44	Kirkland_Manholes-1580	335.19	206.7	11.73	12	PVC	0.01	7,121	197	619	816	11.5	SM14-Ex-EX205	
Kirkland_Main-543	Kirkland_Manholes-1580	335.19	Kirkland_Manholes-1581	324.95	171.4	5.98	12	PVC	0.01	5,081	198	623	820	16.1	SM14-Ex-EX205	
Kirkland_Main-544	Kirkland_Manholes-1582	332.21	Kirkland_Manholes-1581	324.95	160.1	4.53	12	PVC	0.01	4,426	51	195	246	5.6	SM14-Ex-EX206	

2021 (6-year) with Proposed Improvements - Peak Hour Flow - Pipe Capacity Table

Label	Upstream Node	Upstream Invert Elevation (ft)	Downstream Node	Downstream Invert Elevation (ft)	Length (ft)	Slope (%)	Diameter (in)	Material	Manning's n	Design Capacity (gpm)	Domestic Flow (gpm)	I/I Flow (gpm)	Total Flow (gpm)	Percent Full (%)	CIP No.	Notes
Kirkland_Main-545	Kirkland_Manholes-1581	324.95	Kirkland_Manholes-1623	294.92	398.1	7.54	12	PVC	0.01	5,709	249	822	1,071	18.8	SM14-Ex-EX205	
Kirkland_Main-546	Kirkland_Manholes-2681	334.86	Kirkland_Manholes-3028	332.75	289	0.73	12	PVC	0.01	1,776	45	175	220	12.4	SM14-Ex-EX206	
Kirkland_Main-547	Kirkland_Manholes-1583	333.82	Kirkland_Manholes-1582	332.21	16.6	9.69	8	PVC	0.01	2,195	3	8	11	0.5		
Kirkland_Main-548	Kirkland_Manholes-1584	346.72	Kirkland_Manholes-1583	333.82	203.1	6.35	8	PVC	0.01	1,777	3	4	7	0.4		
Kirkland_Main-549	Kirkland_Manholes-1575	314.42	Kirkland_Manholes-1953	290.71	326.1	7.27	8	PVC	0.01	1,901	4	33	36	1.9		
Kirkland_Main-550	Kirkland_Manholes-1150	151.79	Kirkland_Manholes-1151	143.36	156.6	5.38	8	PVC	0.01	1,636	14	58	71	4.4	SM10	
Kirkland_Main-551	Kirkland_Manholes-1151	143.36	Kirkland_Manholes-1152	135.47	158.3	4.98	8	PVC	0.01	1,574	15	66	81	5.1	SM10	
Kirkland_Main-552	Kirkland_Manholes-1170	153.9	Kirkland_Manholes-1150	151.79	249.2	0.85	8	PVC	0.01	649	2	8	10	1.5	SM10	
Kirkland_Main-553	Kirkland_Manholes-306	19.99	Kirkland_Manholes-1183	19.89	217.6	0.05	12	PVC	0.01	446	30	159	190	42.5	SM14-Ex-EX37	
Kirkland_Main-554	Kirkland_Manholes-304	75.98	Kirkland_Manholes-303	75.38	34.2	1.76	8	PVC	0.01	934	18	62	80	8.5	SM10	
Kirkland_Main-555	Kirkland_Manholes-303	75.38	Kirkland_Manholes-305	74.69	171.5	0.4	8	PVC	0.01	447	18	71	88	19.8	SM10	
Kirkland_Main-556	Kirkland_Manholes-302	78.72	Kirkland_Manholes-304	75.98	177.4	1.54	8	PVC	0.01	876	17	53	70	8	SM10	
Kirkland_Main-557	Kirkland_Manholes-307	105.6	Kirkland_Manholes-302	78.72	385.1	6.98	8	PVC	0.01	1,863	16	44	60	3.2	SM10	
Kirkland_Main-558	Kirkland_Manholes-301	74.29	Kirkland_Manholes-300	70.39	326.3	1.2	8	PVC	0.01	771	3	3	6	0.7	SM10	
Kirkland_Main-559	Kirkland_Manholes-1316	272.4	Kirkland_Manholes-1317	271.64	47	1.62	8	PVC	0.01	896	1	12	14	1.5		
Kirkland_Main-563	Kirkland_Manholes-300	70.39	Kirkland_Manholes-299	66.63	324	1.16	8	PVC	0.01	760	6	6	13	1.7	SM10	
Kirkland_Main-564	Kirkland_Manholes-388	297.69	Kirkland_Manholes-389	295.78	310.4	0.62	8	PVC	0.01	553	9	20	29	5.3	SM14-Ex-EX33	
Kirkland_Main-565	Kirkland_Manholes-390	304.37	Kirkland_Manholes-391	302.9	200.9	0.73	8	PVC	0.01	603	2	4	6	1	SM14-Ex-EX34	
Kirkland_Main-566	Kirkland_Manholes-392	305	Kirkland_Manholes-391	302.9	116.9	1.8	8	PVC	0.01	945	33	122	155	16.4	SM14-Ex-EX50	
Kirkland_Main-567	Kirkland_Manholes-2568	299.24	Kirkland_Manholes-2592	294.57	199	2.35	8	PVC	0.01	1,080	2	4	6	0.5	SM14-Ex-EX306	
Kirkland_Main-568	Kirkland_Manholes-2571	325.07	Kirkland_Manholes-2570	299.81	188.9	13.37	8	PVC	0.01	2,578	1	4	5	0.2		
Kirkland_Main-569	Kirkland_Manholes-2602	234.19	Kirkland_Manholes-2601	228.74	344.4	1.58	8	PVC	0.01	887	3	12	15	1.7	SM14-Ex-EX300	
Kirkland_Main-570	Kirkland_Manholes-2603	296.02	Kirkland_Manholes-2588	292.14	272.1	1.43	8	PVC	0.01	842	12	24	36	4.3	SM14-Ex-EX304	
Kirkland_Main-573	Kirkland_Manholes-2610	205.21	Kirkland_Manholes-2609	193.8	79.9	14.28	8	PVC	0.01	2,664	1	4	5	0.2		
Kirkland_Main-574	Kirkland_Manholes-1380	448.63	Kirkland_Manholes-1386	447.82	272.6	0.3	8	PVC	0.01	384	7	8	15	3.9	SM14-Ex-EX219	
Kirkland_Main-575	Kirkland_Manholes-1383	449.36	Kirkland_Manholes-1380	448.63	231	0.32	8	PVC	0.01	396	4	4	8	2.1	SM14-Ex-EX219	
Kirkland_Main-576	Kirkland_Manholes-1381	441.1	Kirkland_Manholes-1382	428.64	320.7	3.88	8	PVC	0.01	1,390	1	4	5	0.3		
Kirkland_Main-577	Kirkland_Manholes-1384	452.11	Kirkland_Manholes-1385	450.86	206.1	0.61	8	PVC	0.01	549	1	4	5	1		
Kirkland_Main-578	Kirkland_Manholes-1385	450.86	Kirkland_Manholes-1386	447.82	69.1	4.4	8	PVC	0.01	1,479	2	8	11	0.7		
Kirkland_Main-579	Kirkland_Manholes-1386	447.82	Kirkland_Manholes-1387	446.83	200.1	0.49	8	PVC	0.01	496	10	20	30	6.1	SM14-Ex-EX219	
Kirkland_Main-580	Kirkland_Manholes-1387	446.83	Kirkland_Manholes-1388	445.49	260.4	0.51	8	PVC	0.01	506	33	98	130	25.8	SM14-Ex-EX219	
Kirkland_Main-581	Kirkland_Manholes-1388	445.49	Kirkland_Manholes-1389	444.08	265.9	0.53	8	PVC	0.01	513	34	102	136	26.5	SM14-Ex-EX219	
Kirkland_Main-582	Kirkland_Manholes-1390	457.46	Kirkland_Manholes-1389	444.08	260.4	5.14	8	PVC	0.01	1,598	7	24	31	2	SM14-Ex-EX218	
Kirkland_Main-583	Kirkland_Manholes-1389	444.08	Kirkland_Manholes-532	443.04	161.2	0.65	8	PVC	0.01	566	43	130	173	30.6	SM14-Ex-EX218	
Kirkland_Main-584	Kirkland_Manholes-532	443.04	Kirkland_Manholes-533	442.23	169.5	0.48	8	PVC	0.01	487	47	134	181	37.2	SM14-Ex-EX218	
Kirkland_Main-585	Kirkland_Manholes-533	442.23	Kirkland_Manholes-534	432.55	269	3.6	8	PVC	0.01	1,337	49	138	188	14	SM14-Ex-EX218	
Kirkland_Main-586	Kirkland_Manholes-530	464.47	Kirkland_Manholes-1390	457.46	207.2	3.38	8	PVC	0.01	1,297	6	20	26	2	SM14-Ex-EX218	
Kirkland_Main-587	Kirkland_Manholes-1391	471.35	Kirkland_Manholes-530	464.47	201.7	3.41	8	PVC	0.01	1,302	3	12	15	1.2	SM14-Ex-EX218	
Kirkland_Main-588	Kirkland_Manholes-543	448.24	Kirkland_Manholes-1387	446.83	163.4	0.86	8	PVC	0.01	655	23	73	96	14.6		
Kirkland_Main-589	Kirkland_Manholes-531	468.8	Kirkland_Manholes-530	464.47	218	1.99	8	PVC	0.01	994	1	4	5	0.5		
Kirkland_Main-590	Kirkland_Manholes-339	249.19	Kirkland_Manholes-340	235.81	214	6.25	8	PVC	0.01	1,763	17	77	95	5.4		
Kirkland_Main-592	Kirkland_Manholes-2009	426.97	Kirkland_Manholes-2010	424.43	206.3	1.23	8	PVC	0.01	782	14	53	67	8.6		
Kirkland_Main-593	Kirkland_Manholes-2011	417.75	Kirkland_Manholes-2012	406.67	363.8	3.05	8	PVC	0.01	1,230	2	8	11	0.9		
Kirkland_Main-594	Kirkland_Manholes-1989	447.97	Kirkland_Manholes-1990	439.8	245.1	3.33	8	PVC	0.01	1,287	2	8	10	0.8		
Kirkland_Main-595	Kirkland_Manholes-1990	439.8	Kirkland_Manholes-1991	431.18	131.7	6.55	8	PVC	0.01	1,804	7	28	35	1.9		
Kirkland_Main-596	Kirkland_Manholes-556	457.9	Kirkland_Manholes-3007	456.9	222.1	0.45	8	PVC	0.01	473	1	4	5	1		
Kirkland_Main-597	Kirkland_Manholes-2495	184.35	Kirkland_Manholes-2494	170.93	403.6	3.33	8	PVC	0.01	1,286	13	20	34	2.6	SM14-Ex-EX236	
Kirkland_Main-598	Kirkland_Manholes-2496	191.57	Kirkland_Manholes-2495	184.35	278.9	2.59	8	PVC	0.01	1,134	11	16	27	2.4	SM14-Ex-EX236	
Kirkland_Main-599	Kirkland_Manholes-2497	194.88	Kirkland_Manholes-2498	194.29	45.2	1.3	8	PVC	0.01	805	9	8	18	2.2	SM14-Ex-EX236	
Kirkland_Main-600	Kirkland_Manholes-2498	194.29	Kirkland_Manholes-2496	191.57	77.4	3.51	8	PVC	0.01	1,322	10	12	23	1.7	SM14-Ex-EX236	
Kirkland_Main-601	Kirkland_Manholes-2237	143.38	Kirkland_Manholes-2499	140.38	322.1	0.93	8	PVC	0.01	680	4	6	10	1.5	SM14-Ex-EX225	
Kirkland_Main-602	Kirkland_Manholes-2499	140.38	Kirkland_Manholes-2500	122.66	273.4	6.48	8	PVC	0.01	1,795	6	12	18	1	SM14-Ex-EX225	
Kirkland_Main-603	Kirkland_Manholes-2500	122.66	Kirkland_Manholes-2501	104.86	254.1	7.01	8	PVC	0.01	1,866	7	18	26	1.4	SM14-Ex-EX225	
Kirkland_Main-604	Kirkland_Manholes-2501	104.86	Kirkland_Manholes-2502	102.46	257.9	0.93	8	PVC	0.01	680	10	24	34	5	SM14-Ex-EX225	
Kirkland_Main-605	Kirkland_Manholes-2502	102.46	Kirkland_Manholes-2503	101.49	223.5	0.43	8	PVC	0.01	464	14	31	45	9.6	SM14-Ex-EX225	
Kirkland_Main-606	Kirkland_Manholes-2504	121.59	Kirkland_Manholes-2503	101.49	254	7.91	8	PVC	0.01	1,983	5	12	18	0.9	SM14-Ex-EX223	
Kirkland_Main-607	Kirkland_Manholes-2503	101.49	Kirkland_Manholes-2507	88.29	256.5	5.15	8	PVC	0.01	1,599	21	49	70	4.3	SM14-Ex-EX223	
Kirkland_Main-608	Kirkland_Manholes-2505	125.11	Kirkland_Manholes-2504	121.59	387.3	0.91	8	PVC	0.01	672	3	6	9	1.3	SM14-Ex-EX223	
Kirkland_Main-609	Kirkland_Manholes-2763	13.15	Kirkland_Manholes-2762	13.1	227.4	0.02	36	PVC	0.01	5,771	554	1,572	2,428	42.1	SM14-Ex-EX10	
Kirkland_Main-610	Kirkland_Manholes-2238	92.13	Kirkland_Manholes-2118	82.91	342.6	2.69	8	PVC	0.01	1,157	5	12	17	1.5	SM14-Ex-EX224	
Kirkland_Main-611	Kirkland_Manholes-2118	82.91	Kirkland_Manholes-2146	75.22	210	3.66	8	PVC	0.01	1,349	31	79	110	8.2	SM14-Ex-EX223	
Kirkland_Main-612	Kirkland_Manholes-2506	86.22	Kirkland_Manholes-2118	82.91	249.1	1.33	8	PVC	0.01	813	23	61	84	10.4	SM14-Ex-EX223	

2021 (6-year) with Proposed Improvements - Peak Hour Flow - Pipe Capacity Table

Label	Upstream Node	Upstream Invert Elevation (ft)	Downstream Node	Downstream Invert Elevation (ft)	Length (ft)	Slope (%)	Diameter (in)	Material	Manning's n	Design Capacity (gpm)	Domestic Flow (gpm)	I/I Flow (gpm)	Total Flow (gpm)	Percent Full (%)	CIP No.	Notes
Kirkland_Main-613	Kirkland_Manholes-2507	88.29	Kirkland_Manholes-2506	86.22	236.4	0.88	8	PVC	0.01	660	22	55	77	11.6	SM14-Ex-EX223	
Kirkland_Main-614	Kirkland_Manholes-2508	120.01	Kirkland_Manholes-2510	102.3	301.7	5.87	8	PVC	0.01	1,708	5	18	23	1.3	SM14-Ex-EX229	
Kirkland_Main-615	Kirkland_Manholes-2144	65.5	Kirkland_Manholes-2143	61.9	34.5	10.44	8	PVC	0.01	2,279	74	82	156	6.9		
Kirkland_Main-616	Kirkland_Manholes-2145	63.1	Kirkland_Manholes-2143	61.9	31.4	3.82	8	PVC	0.01	1,377	5	49	54	4		
Kirkland_Main-618	Kirkland_Manholes-2170	148.68	Kirkland_Manholes-2169	142.85	119.8	4.87	8	PVC	0.01	1,555	1	8	9	0.6	SM14-Ex-EX193	
Kirkland_Main-622	Kirkland_Manholes-2167	120.69	Kirkland_Manholes-2166	108.92	118.4	9.94	8	PVC	0.01	2,223	3	33	36	1.6	SM14-Ex-EX193	
Kirkland_Main-623	Kirkland_Manholes-2166	108.92	Kirkland_Manholes-2165	94.99	230.8	6.04	8	PVC	0.01	1,732	7	41	48	2.8	SM14-Ex-EX193	
Kirkland_Main-626	Kirkland_Manholes-2719	31.99	Kirkland_Manholes-2715	29.78	252.5	0.88	8	PVC	0.01	660	83	12	96	14.5		
Kirkland_Main-627	Kirkland_Manholes-2278	406.74	Kirkland_Manholes-2271	405.49	96	1.3	8	PVC	0.01	805	2	16	19	2.3		
Kirkland_Main-630	Kirkland_Manholes-2407	403.31	Kirkland_Manholes-2268	401.9	163.6	0.86	8	PVC	0.01	655	13	49	62	9.4	SM14-Ex-EX261	
Kirkland_Main-631	Kirkland_Manholes-2266	392.8	Kirkland_Manholes-2265	392	110.1	0.73	8	PVC	0.01	601	25	126	151	25.1	SM14-Ex-EX212	
Kirkland_Main-632	Kirkland_Manholes-2265	392	Kirkland_Manholes-2263	374.13	447.5	3.99	8	PVC	0.01	1,409	25	130	155	11	SM14-Ex-EX212	
Kirkland_Main-633	Kirkland_Manholes-2245	234.09	Kirkland_Manholes-2074	213.49	327.6	6.29	8	PVC	0.01	1,768	49	49	98	5.5	SM14-Ex-EX246	
Kirkland_Main-634	Kirkland_Manholes-2253	239.74	Kirkland_Manholes-2252	236.86	193.1	1.49	8	PVC	0.01	861	35	12	47	5.4	SM14-Ex-EX247	
Kirkland_Main-635	Kirkland_Manholes-2252	236.86	Kirkland_Manholes-2245	234.09	241.6	1.15	8	PVC	0.01	755	40	16	56	7.5	SM14-Ex-EX247	
Kirkland_Main-636	Kirkland_Manholes-2246	246.17	Kirkland_Manholes-2245	234.09	185.5	6.51	8	PVC	0.01	1,799	7	24	31	1.7	SM14-Ex-EX246	
Kirkland_Main-637	Kirkland_Manholes-2247	249.9	Kirkland_Manholes-2246	246.17	310.7	1.2	8	PVC	0.01	773	5	20	25	3.3	SM14-Ex-EX246	
Kirkland_Main-638	Kirkland_Manholes-2251	257.04	Kirkland_Manholes-2247	249.9	237.7	3	8	PVC	0.01	1,222	0	4	4	0.3	SM14-Ex-EX246	
Kirkland_Main-639	Kirkland_Manholes-2248	259.41	Kirkland_Manholes-2247	249.9	197.8	4.81	8	PVC	0.01	1,546	4	12	16	1		
Kirkland_Main-640	Kirkland_Manholes-2249	263.29	Kirkland_Manholes-2248	259.41	137.3	2.82	8	PVC	0.01	1,185	4	8	12	1		
Kirkland_Main-641	Kirkland_Manholes-2250	275.69	Kirkland_Manholes-2249	263.29	113.4	10.94	8	PVC	0.01	2,332	4	4	8	0.3		
Kirkland_Main-642	Kirkland_Manholes-2261	305.59	Kirkland_Manholes-2260	285.07	409.2	5.01	12	PVC	0.01	4,655	294	871	1,165	25	SM14-Ex-EX248	
Kirkland_Main-643	Kirkland_Manholes-2262	311.78	Kirkland_Manholes-2261	305.59	133.8	4.62	12	PVC	0.01	4,470	291	867	1,158	25.9	SM14-Ex-EX248	
Kirkland_Main-644	Kirkland_Manholes-21	62.08	Kirkland_Manholes-101	61.95	7	1.85	8	PVC	0.01	960	8	30	38	4		
Kirkland_Main-645	Kirkland_Manholes-3038	279.17	Kirkland_Manholes-3039	278.83	84.7	0.4	8	PVC	0.01	446	2	4	6	1.3		
Kirkland_Main-646	Kirkland_Manholes-3039	278.83	Kirkland_Manholes-3035	266.43	233.8	5.3	8	PVC	0.01	1,624	3	8	11	0.7		
Kirkland_Main-647	Kirkland_Manholes-3037	277.97	Kirkland_Manholes-3036	268.75	180.1	5.12	8	PVC	0.01	1,595	1	4	5	0.3		
Kirkland_Main-648	Kirkland_Manholes-3036	268.75	Kirkland_Manholes-3035	266.43	62.1	3.74	8	PVC	0.01	1,363	2	8	10	0.8		
Kirkland_Main-649	Kirkland_Manholes-1505	267	Kirkland_Manholes-3035	266.43	67.6	0.84	8	PVC	0.01	647	25	90	115	17.7		
Kirkland_Main-650	Kirkland_Manholes-3040	208.06	Kirkland_Manholes-3041	198.95	98.1	9.29	8	PVC	0.01	2,148	6	4	10	0.5		
Kirkland_Main-651	Kirkland_Manholes-3041	198.95	Kirkland_Manholes-1602	196.74	179.4	1.23	8	PVC	0.01	782	8	8	17	2.1		
Kirkland_Main-652	Kirkland_Manholes-3100	18.3	Kirkland_Manholes-3044	18.06	60.9	0.39	18	PVC	0.01	3,847	100	67	167	4.3	SM14-Ex-EX289	
Kirkland_Main-653	Kirkland_Manholes-566	483.97	Kirkland_Manholes-3045	483.35	154.3	0.4	8	PVC	0.01	446	1	4	5	1.1		
Kirkland_Main-655	Kirkland_Manholes-3046	250.83	Kirkland_Manholes-3047	250.39	298.9	0.15	8	PVC	0.01	271	2	4	6	2.1		
Kirkland_Main-656	Kirkland_Manholes-3047	250.39	Kirkland_Manholes-396	249.55	18.8	4.48	8	PVC	0.01	1,492	3	8	11	0.7		
Kirkland_Main-657	Kirkland_Manholes-3048	215.92	Kirkland_Manholes-364	215.51	48.9	0.84	21	PVC	0.01	8,463	637	2,014	2,651	31.3		
Kirkland_Main-658	Kirkland_Manholes-3051	246.2	Kirkland_Manholes-3050	235.83	120.9	8.58	8	PVC	0.01	2,065	1	4	5	0.2		
Kirkland_Main-659	Kirkland_Manholes-3050	235.83	Kirkland_Manholes-3049	221.64	223.5	6.35	8	PVC	0.01	1,776	1	8	9	0.5		
Kirkland_Main-660	Kirkland_Manholes-3049	221.64	Kirkland_Manholes-3048	215.92	33.6	17.02	8	PVC	0.01	2,909	2	12	14	0.5		
Kirkland_Main-661	Kirkland_Manholes-3054	230.52	Kirkland_Manholes-3053	227.56	179.1	1.65	8	PVC	0.01	906	2	4	6	0.7		
Kirkland_Main-662	Kirkland_Manholes-3052	228.3	Kirkland_Manholes-3053	227.56	79.8	0.93	8	PVC	0.01	679	1	4	5	0.7		
Kirkland_Main-663	Kirkland_Manholes-3053	227.56	Kirkland_Manholes-3055	218.26	198.6	4.68	8	PVC	0.01	1,526	3	12	15	1		
Kirkland_Main-664	Kirkland_Manholes-3055	218.26	Kirkland_Manholes-364	215.51	19.7	13.95	8	PVC	0.01	2,634	3	16	19	0.7		
Kirkland_Main-665	Kirkland_Manholes-3058	393.03	Kirkland_Manholes-3057	384.71	254	3.28	8	PVC	0.01	1,276	1	4	5	0.4		
Kirkland_Main-666	Kirkland_Manholes-3057	384.71	Kirkland_Manholes-3056	382.54	53.8	4.03	8	PVC	0.01	1,415	2	8	10	0.7		
Kirkland_Main-667	Kirkland_Manholes-3056	382.54	Kirkland_Manholes-3016	372.66	250.2	3.95	8	PVC	0.01	1,401	3	12	15	1.1		
Kirkland_Main-668	Kirkland_Manholes-3062	383.23	Kirkland_Manholes-3063	372.82	282.2	3.69	8	PVC	0.01	1,354	0	4	4	0.3		
Kirkland_Main-669	Kirkland_Manholes-3063	372.82	Kirkland_Manholes-3061	361.76	319.4	3.46	8	PVC	0.01	1,312	1	8	9	0.7		
Kirkland_Main-670	Kirkland_Manholes-3061	361.76	Kirkland_Manholes-3060	360.51	136.8	0.91	8	PVC	0.01	674	1	12	13	1.9		
Kirkland_Main-671	Kirkland_Manholes-3059	374.97	Kirkland_Manholes-3060	371.3	316.1	1.16	8	PVC	0.01	760	1	4	5	0.6		Drop Connection
Kirkland_Main-672	Kirkland_Manholes-3060	360.51	Kirkland_Manholes-3064	358.68	232.8	0.79	8	PVC	0.01	625	3	20	23	3.7		
Kirkland_Main-673	Kirkland_Manholes-3064	358.68	Kirkland_Manholes-3065	358.3	94.6	0.4	8	PVC	0.01	446	3	24	28	6.2		
Kirkland_Main-674	Kirkland_Manholes-3065	358.3	Kirkland_Manholes-3066	356.12	87.4	2.49	8	PVC	0.01	1,113	5	28	33	3		
Kirkland_Main-675	Kirkland_Manholes-3066	356.12	Kirkland_Manholes-3067	344.94	288.6	3.87	8	PVC	0.01	1,388	7	33	39	2.8		
Kirkland_Main-676	Kirkland_Manholes-3067	344.94	Kirkland_Manholes-3068	332.11	210.6	6.09	8	PVC	0.01	1,740	7	37	43	2.5		
Kirkland_Main-677	Kirkland_Manholes-3068	332.11	Kirkland_Manholes-3069	304.52	266.1	10.37	8	PVC	0.01	2,270	7	41	48	2.1		
Kirkland_Main-678	Kirkland_Manholes-3069	304.52	Kirkland_Manholes-926	302.74	43.6	4.09	8	PVC	0.01	1,425	7	45	52	3.7		
Kirkland_Main-679	Kirkland_Manholes-299	66.63	Kirkland_Manholes-298	56.65	96.2	10.37	8	PVC	0.01	2,271	10	16	26	1.1	SM10	
Kirkland_Main-680	Kirkland_Manholes-298	56.65	Kirkland_Manholes-289	31.71	154.4	16.15	8	PVC	0.01	2,834	10	19	29	1	SM10	
Kirkland_Main-681	Kirkland_Manholes-281	36.84	Kirkland_Manholes-280	27.37	236.3	4.01	8	PVC	0.01	1,411	2	13	14	1	SM10	
Kirkland_Main-682	Kirkland_Manholes-752	265.45	Kirkland_Manholes-1559	253.89	158.5	7.29	8	PVC	0.01	1,904	23	61	84	4.4	SM14-Ex-EX68	
Kirkland_Main-683	Kirkland_Manholes-1561	229.17	Kirkland_Manholes-1562	206.57	130	17.39	8	PVC	0.01	2,940	1	4	5	0.2		

2021 (6-year) with Proposed Improvements - Peak Hour Flow - Pipe Capacity Table

Label	Upstream Node	Upstream Invert Elevation (ft)	Downstream Node	Downstream Invert Elevation (ft)	Length (ft)	Slope (%)	Diameter (in)	Material	Manning's n	Design Capacity (gpm)	Domestic Flow (gpm)	I/I Flow (gpm)	Total Flow (gpm)	Percent Full (%)	CIP No.	Notes
Kirkland_Main-684	Kirkland_Manholes-1563	203.28	Kirkland_Manholes-1564	164.37	189.8	20.5	8	PVC	0.01	3,192	1	12	14	0.4		
Kirkland_Main-685	Kirkland_Manholes-1347	427.05	Kirkland_Manholes-1349	426.8	216.3	0.12	8	PVC	0.01	240	4	16	20	8.3		
Kirkland_Main-686	Kirkland_Manholes-1349	426.8	Kirkland_Manholes-1348	423.36	47.3	7.28	8	PVC	0.01	1,902	4	20	25	1.3		
Kirkland_Main-687	Kirkland_Manholes-1348	423.36	Kirkland_Manholes-1354	421.4	318.8	0.61	8	PVC	0.01	553	5	24	30	5.4		
Kirkland_Main-688	Kirkland_Manholes-1352	406.36	Kirkland_Manholes-1903	399.77	227.2	2.9	8	PVC	0.01	1,201	2	4	6	0.5		
Kirkland_Main-689	Kirkland_Manholes-1353	422.52	Kirkland_Manholes-1354	421.4	133.4	0.84	8	PVC	0.01	646	2	4	6	1		
Kirkland_Main-690	Kirkland_Manholes-1354	421.4	Kirkland_Manholes-1355	420.81	87.2	0.68	8	PVC	0.01	580	8	33	40	6.9		
Kirkland_Main-691	Kirkland_Manholes-832	339.26	Kirkland_Manholes-794	336.64	92.4	2.84	8	PVC	0.01	1,188	3	12	15	1.3		
Kirkland_Main-692	Kirkland_Manholes-794	336.64	Kirkland_Manholes-795	330.76	102.1	5.76	8	PVC	0.01	1,692	3	16	19	1.1		
Kirkland_Main-693	Kirkland_Manholes-795	330.76	Kirkland_Manholes-796	329.52	188.4	0.66	8	PVC	0.01	572	4	20	24	4.3		
Kirkland_Main-694	Kirkland_Manholes-833	205	Kirkland_Manholes-830	198.45	115.6	5.67	8	PVC	0.01	1,678	1	4	5	0.3		
Kirkland_Main-695	Kirkland_Manholes-1212	307.51	Kirkland_Manholes-1213	300.54	162.4	4.29	6	Concrete	0.013	522	67	20	88	16.8		
Kirkland_Main-696	Kirkland_Manholes-1213	300.54	Kirkland_Manholes-2616	274.02	226.7	11.7	6	Concrete	0.013	861	67	24	92	10.7		
Kirkland_Main-697	Kirkland_Manholes-515	18.45	Kirkland_Manholes-514	18.19	122.3	0.21	12	PVC	0.01	953	34	203	237	24.9	SM14-Ex-EX37	
Kirkland_Main-698	Kirkland_Manholes-1186	18.89	Kirkland_Manholes-515	18.45	232.7	0.19	12	PVC	0.01	907	34	195	228	25.1	SM14-Ex-EX37	
Kirkland_Main-699	Kirkland_Manholes-1185	19.29	Kirkland_Manholes-1186	18.89	267.9	0.15	12	PVC	0.01	803	32	186	218	27.2	SM14-Ex-EX37	
Kirkland_Main-700	Kirkland_Manholes-2510	102.3	Kirkland_Manholes-2511	85.9	155.2	10.57	8	PVC	0.01	2,292	7	24	31	1.4	SM14-Ex-EX229	
Kirkland_Main-701	Kirkland_Manholes-2512	90.74	Kirkland_Manholes-2511	85.9	110.5	4.38	8	PVC	0.01	1,475	2	12	14	1	SM14-Ex-EX228	
Kirkland_Main-703	Kirkland_Manholes-2513	104.61	Kirkland_Manholes-2512	90.74	161.7	8.58	8	PVC	0.01	2,065	2	6	8	0.4	SM14-Ex-EX228	
Kirkland_Main-704	Kirkland_Manholes-1988	449.74	Kirkland_Manholes-1989	447.97	257	0.69	8	PVC	0.01	585	1	4	5	0.9		
Kirkland_Main-705	Kirkland_Manholes-2008	435.7	Kirkland_Manholes-1993	435.41	162.8	0.18	8	PVC	0.01	298	6	16	22	7.5		
Kirkland_Main-706	Kirkland_Manholes-2060	437.6	Kirkland_Manholes-2008	435.7	259.6	0.73	8	PVC	0.01	603	3	4	7	1.2		
Kirkland_Main-707	Kirkland_Manholes-1993	435.41	Kirkland_Manholes-2061	434.9	121.2	0.42	8	PVC	0.01	457	6	20	27	5.8		
Kirkland_Main-708	Kirkland_Manholes-2061	434.9	Kirkland_Manholes-1994	434.42	35	1.37	8	PVC	0.01	826	7	24	31	3.8		
Kirkland_Main-709	Kirkland_Manholes-1994	434.42	Kirkland_Manholes-1995	433.71	121.9	0.58	8	PVC	0.01	538	7	28	36	6.6		
Kirkland_Main-710	Kirkland_Manholes-1995	433.71	Kirkland_Manholes-1996	432.86	110.9	0.77	8	PVC	0.01	617	9	37	46	7.4		
Kirkland_Main-711	Kirkland_Manholes-1996	432.86	Kirkland_Manholes-1997	432.14	299.5	0.24	8	PVC	0.01	346	9	41	50	14.5		
Kirkland_Main-712	Kirkland_Manholes-1998	432.54	Kirkland_Manholes-1997	432.14	196.8	0.2	8	PVC	0.01	318	1	4	5	1.7	SM14-Ex-EX211	
Kirkland_Main-713	Kirkland_Manholes-1997	432.14	Kirkland_Manholes-1999	430.91	331.2	0.37	8	PVC	0.01	430	13	49	62	14.4	SM14-Ex-EX211	
Kirkland_Main-714	Kirkland_Manholes-2062	435.63	Kirkland_Manholes-1995	433.71	265.8	0.72	8	PVC	0.01	599	2	4	6	0.9		
Kirkland_Main-717	Kirkland_Manholes-2063	422.68	Kirkland_Manholes-2671	399.75	265	8.65	8	PVC	0.01	2,074	15	73	89	4.3	SM14-Ex-EX209	
Kirkland_Main-718	Kirkland_Manholes-2066	434.49	Kirkland_Manholes-2059	433	119.7	1.24	8	PVC	0.01	787	14	4	18	2.2	SM14-Ex-EX213	
Kirkland_Main-719	Kirkland_Manholes-2698	186.34	Kirkland_Manholes-2068	163.08	368.4	6.31	8	PVC	0.01	1,772	15	61	76	4.3	SM14-Ex-EX198	
Kirkland_Main-720	Kirkland_Manholes-2073	208.76	Kirkland_Manholes-2072	202.36	249.4	2.57	8	PVC	0.01	1,129	2	4	6	0.6	SM14-Ex-EX200	
Kirkland_Main-721	Kirkland_Manholes-2072	202.36	Kirkland_Manholes-2071	194.98	377.1	1.96	8	PVC	0.01	986	6	8	14	1.4	SM14-Ex-EX200	
Kirkland_Main-722	Kirkland_Manholes-2071	194.98	Kirkland_Manholes-2070	185.96	391.2	2.31	8	PVC	0.01	1,071	9	12	22	2	SM14-Ex-EX200	
Kirkland_Main-723	Kirkland_Manholes-2070	185.96	Kirkland_Manholes-2069	170.43	333.6	4.65	8	PVC	0.01	1,521	13	20	33	2.2	SM14-Ex-EX200	
Kirkland_Main-724	Kirkland_Manholes-2082	247.37	Kirkland_Manholes-2083	246.89	120.8	0.4	8	PVC	0.01	447	0	4	4	1		
Kirkland_Main-725	Kirkland_Manholes-2083	246.89	Kirkland_Manholes-658	246.8	21.8	0.4	8	PVC	0.01	446	1	8	9	2		
Kirkland_Main-727	Kirkland_Manholes-2077	125.7	Kirkland_Manholes-2078	109.29	215.7	7.61	8	PVC	0.01	1,945	34	25	58	3	SM14-Ex-EX195	
Kirkland_Main-728	Kirkland_Manholes-2076	138.89	Kirkland_Manholes-2077	125.7	187.9	7.02	8	PVC	0.01	1,868	31	16	48	2.5	SM14-Ex-EX195	
Kirkland_Main-729	Kirkland_Manholes-2075	153.92	Kirkland_Manholes-2076	138.89	219.4	6.85	8	PVC	0.01	1,845	1	8	9	0.5	SM14-Ex-EX195	
Kirkland_Main-731	Kirkland_Manholes-574	110.98	Kirkland_Manholes-595	103.44	159.1	4.74	8	PVC	0.01	1,535	3	16	20	1.3	SM14-Ex-EX116	
Kirkland_Main-736	Kirkland_Manholes-1656	125.68	Kirkland_Manholes-1655	123.15	42	6.03	8	PVC	0.01	1,731	9	8	17	1		
Kirkland_Main-737	Kirkland_Manholes-1655	123.15	Kirkland_Manholes-1657	121.13	91.5	2.21	8	PVC	0.01	1,048	9	16	25	2.4		
Kirkland_Main-738	Kirkland_Manholes-1658	125.68	Kirkland_Manholes-1657	125.55	31.5	0.4	8	PVC	0.01	446	3	8	11	2.5		Drop Connection
Kirkland_Main-739	Kirkland_Manholes-1657	121.13	Kirkland_Manholes-1659	116.52	191.7	2.41	8	PVC	0.01	1,093	11	33	44	4.1		
Kirkland_Main-740	Kirkland_Manholes-1659	116.52	Kirkland_Manholes-1660	110.77	122.6	4.69	8	PVC	0.01	1,527	29	41	71	4.6		
Kirkland_Main-741	Kirkland_Manholes-1660	110.77	Kirkland_Manholes-1662	100.46	127.6	8.08	8	PVC	0.01	2,004	29	49	79	3.9		
Kirkland_Main-742	Kirkland_Manholes-1663	103.65	Kirkland_Manholes-1661	102.19	55.6	2.62	8	PVC	0.01	1,142	2	16	19	1.6		
Kirkland_Main-743	Kirkland_Manholes-1661	102.19	Kirkland_Manholes-1662	100.46	11.1	15.62	8	PVC	0.01	2,786	2	25	27	1		
Kirkland_Main-744	Kirkland_Manholes-1662	100.46	Kirkland_Manholes-1665	94.21	177.6	3.52	8	PVC	0.01	1,322	32	82	114	8.6		
Kirkland_Main-745	Kirkland_Manholes-1664	108.5	Kirkland_Manholes-1663	103.65	57.4	8.45	8	PVC	0.01	2,049	2	8	10	0.5	SM14-Ex-EX169	
Kirkland_Main-746	Kirkland_Manholes-1667	101.23	Kirkland_Manholes-1666	89.71	215.8	5.34	8	PVC	0.01	1,629	15	41	56	3.4		
Kirkland_Main-747	Kirkland_Manholes-1668	119.52	Kirkland_Manholes-1667	101.23	220.6	8.29	8	PVC	0.01	2,030	9	25	34	1.7		
Kirkland_Main-748	Kirkland_Manholes-1295	119.7	Kirkland_Manholes-572	113.73	319.3	1.87	8	PVC	0.01	964	90	321	411	42.6	SM14-Ex-EX117	
Kirkland_Main-749	Kirkland_Manholes-1256	151.53	Kirkland_Manholes-1284	145.84	256.4	2.22	8	PVC	0.01	1,050	21	115	136	13	SM14-Ex-EX108	
Kirkland_Main-750	Kirkland_Manholes-1283	147.65	Kirkland_Manholes-1284	145.84	53.9	3.36	8	PVC	0.01	1,292	4	16	21	1.6	SM14-Ex-EX108	
Kirkland_Main-751	Kirkland_Manholes-1282	154.9	Kirkland_Manholes-1283	147.65	295.8	2.45	8	PVC	0.01	1,104	2	8	10	0.9	SM14-Ex-EX108	
Kirkland_Main-753	Kirkland_Manholes-1284	145.84	Kirkland_Manholes-1287	140.18	314.1	1.8	8	PVC	0.01	946	27	140	167	17.7	SM14-Ex-EX105	
Kirkland_Main-755	Kirkland_Manholes-1285	150.78	Kirkland_Manholes-1286	147.03	125.8	2.98	8	PVC	0.01	1,217	1	8	9	0.8	SM14-Ex-EX109	
Kirkland_Main-756	Kirkland_Manholes-1286	147.03	Kirkland_Manholes-1287	140.18	192.2	3.56	8	PVC	0.01	1,331	4	16	20	1.5	SM14-Ex-EX109	

2021 (6-year) with Proposed Improvements - Peak Hour Flow - Pipe Capacity Table

Label	Upstream Node	Upstream Invert Elevation (ft)	Downstream Node	Downstream Invert Elevation (ft)	Length (ft)	Slope (%)	Diameter (in)	Material	Manning's n	Design Capacity (gpm)	Domestic Flow (gpm)	I/I Flow (gpm)	Total Flow (gpm)	Percent Full (%)	CIP No.	Notes
Kirkland_Main-757	Kirkland_Manholes-1289	131.61	Kirkland_Manholes-1290	127.52	235.4	1.74	8	PVC	0.01	929	39	181	221	23.7	SM14-Ex-EX105	
Kirkland_Main-758	Kirkland_Manholes-1290	127.52	Kirkland_Manholes-576	111.2	318.6	5.12	8	PVC	0.01	1,596	52	255	308	19.3	SM14-Ex-EX105	
Kirkland_Main-759	Kirkland_Manholes-1291	137.27	Kirkland_Manholes-1290	127.52	280.9	3.47	8	PVC	0.01	1,314	11	66	77	5.9	SM14-Ex-EX111	
Kirkland_Main-760	Kirkland_Manholes-1261	144.57	Kirkland_Manholes-1291	137.27	276	2.64	8	PVC	0.01	1,147	9	58	66	5.8	SM14-Ex-EX111	
Kirkland_Main-761	Kirkland_Manholes-1227	174.57	Kirkland_Manholes-584	159.38	158.7	9.57	8	PVC	0.01	2,181	28	91	119	5.5	SM14-Ex-EX96	
Kirkland_Main-762	Kirkland_Manholes-1238	263.26	Kirkland_Manholes-1298	253.38	261	3.78	8	PVC	0.01	1,372	4	16	20	1.5	SM14-Ex-EX64	
Kirkland_Main-763	Kirkland_Manholes-1298	253.38	Kirkland_Manholes-1245	243.41	258.4	3.86	8	PVC	0.01	1,385	7	25	32	2.3	SM14-Ex-EX64	
Kirkland_Main-765	Kirkland_Manholes-1302	252.61	Kirkland_Manholes-1301	241.1	158.8	7.25	8	PVC	0.01	1,898	2	8	10	0.5	SM14-Ex-EX98	
Kirkland_Main-766	Kirkland_Manholes-1230	236.32	Kirkland_Manholes-1229	218.73	349.5	5.03	8	PVC	0.01	1,582	19	58	76	4.8	SM14-Ex-EX96	
Kirkland_Main-767	Kirkland_Manholes-1229	218.73	Kirkland_Manholes-1228	189.87	369	7.82	8	PVC	0.01	1,972	23	66	89	4.5	SM14-Ex-EX96	
Kirkland_Main-768	Kirkland_Manholes-727	84.25	Kirkland_Manholes-728	70.86	152.9	8.76	8	PVC	0.01	2,086	142	536	678	32.5	SM14-Ex-EX117	
Kirkland_Main-769	Kirkland_Manholes-1407	474.89	Kirkland_Manholes-1406	473.57	319.1	0.41	8	PVC	0.01	453	33	28	62	13.6		
Kirkland_Main-770	Kirkland_Manholes-1415	475.19	Kirkland_Manholes-1406	473.57	245.1	0.66	8	PVC	0.01	573	35	45	80	13.9		
Kirkland_Main-771	Kirkland_Manholes-1408	476.13	Kirkland_Manholes-1407	474.89	287.1	0.43	8	PVC	0.01	463	9	24	33	7.2		
Kirkland_Main-772	Kirkland_Manholes-1409	479.33	Kirkland_Manholes-1408	476.13	271.9	1.18	8	PVC	0.01	765	9	20	29	3.8		
Kirkland_Main-773	Kirkland_Manholes-1410	479.58	Kirkland_Manholes-1409	479.33	219	0.11	8	PVC	0.01	238	8	16	24	10.2		
Kirkland_Main-774	Kirkland_Manholes-1411	480.36	Kirkland_Manholes-1410	479.58	194.5	0.4	8	PVC	0.01	445	8	12	20	4.5		
Kirkland_Main-775	Kirkland_Manholes-1412	483.98	Kirkland_Manholes-1411	480.36	100.6	3.6	8	PVC	0.01	1,338	3	4	7	0.6		
Kirkland_Main-776	Kirkland_Manholes-1853	276.11	Kirkland_Manholes-1851	275	191.4	0.58	8	PVC	0.01	537	1	4	5	0.9		
Kirkland_Main-777	Kirkland_Manholes-1772	68.31	Kirkland_Manholes-2929	66.75	69.5	2.25	12	PVC	0.01	3,115	134	478	612	19.6	SM14-Ex-EX166	
Kirkland_Main-778	Kirkland_Manholes-2929	66.75	Kirkland_Manholes-729	64.46	261.6	0.88	12	PVC	0.01	1,946	134	486	620	31.9	SM14-Ex-EX166	
Kirkland_Main-780	Kirkland_Manholes-1413	481	Kirkland_Manholes-1411	480.36	161.4	0.4	8	PVC	0.01	446	4	4	8	1.8		
Kirkland_Main-781	Kirkland_Manholes-1418	477.42	Kirkland_Manholes-1414	476.69	182.7	0.4	8	PVC	0.01	446	2	16	18	4		
Kirkland_Main-782	Kirkland_Manholes-2078	109.29	Kirkland_Manholes-2079	101.7	225.4	3.37	8	PVC	0.01	1,294	39	33	72	5.6	SM14-Ex-EX195	
Kirkland_Main-783	Kirkland_Manholes-2079	101.7	Kirkland_Manholes-2080	100.3	24.2	5.79	8	PVC	0.01	1,697	41	41	82	4.8		
Kirkland_Main-784	Kirkland_Manholes-2129	162.62	Kirkland_Manholes-2130	161.57	13	8.1	12	PVC	0.01	5,916	0	8	8	0.1	SM14-Ex-EX235	
Kirkland_Main-785	Kirkland_Manholes-2128	162.8	Kirkland_Manholes-2129	162.62	31	0.58	12	PVC	0.01	1,584	0	4	4	0.3		
Kirkland_Main-786	Kirkland_Manholes-2127	166.38	Kirkland_Manholes-2130	161.57	81	5.94	8	PVC	0.01	1,718	23	8	31	1.8	SM14-Ex-EX235	
Kirkland_Main-787	Kirkland_Manholes-2131	158.3	O-32	156.08	22.1	10.06	15	PVC	0.01	11,953	676	1,550	2,226	18.6	SM14-Ex-EX236	
Kirkland_Main-788	Kirkland_Manholes-2139	96.6	Kirkland_Manholes-2138	94.8	32.5	5.54	8	PVC	0.01	1,659	5	25	30	1.8		
Kirkland_Main-789	Kirkland_Manholes-2154	28.66	Kirkland_Manholes-2153	28.2	11.2	4.1	8	PVC	0.01	1,428	3	39	42	3	SM14-Ex-EX220	
Kirkland_Main-790	Kirkland_Manholes-2153	28.2	Kirkland_Manholes-2152	27.32	8.5	10.4	8	PVC	0.01	2,274	3	45	49	2.2	SM14-Ex-EX220	
Kirkland_Main-791	Kirkland_Manholes-2152	27.32	Kirkland_Manholes-2320	18	38.7	24.05	8	PVC	0.01	3,458	3	52	55	1.6		
Kirkland_Main-792	Kirkland_Manholes-2151	49.81	Kirkland_Manholes-2154	28.66	303.9	6.96	8	PVC	0.01	1,860	3	32	36	1.9	SM14-Ex-EX220	
Kirkland_Main-793	Kirkland_Manholes-2150	50.98	Kirkland_Manholes-2151	49.81	135.2	0.87	8	PVC	0.01	656	2	26	28	4.2	SM14-Ex-EX220	
Kirkland_Main-794	Kirkland_Manholes-2149	76.26	Kirkland_Manholes-2150	50.98	227.7	11.1	8	PVC	0.01	2,349	1	19	20	0.9	SM14-Ex-EX220	
Kirkland_Main-795	Kirkland_Manholes-2148	77.03	Kirkland_Manholes-2149	76.26	100.5	0.77	8	PVC	0.01	617	0	13	13	2.1	SM14-Ex-EX220	
Kirkland_Main-796	Kirkland_Manholes-2147	92.38	Kirkland_Manholes-2148	77.03	204.1	7.52	8	PVC	0.01	1,934	0	6	6	0.3	SM14-Ex-EX220	
Kirkland_Main-800	Kirkland_Manholes-2158	102.11	Kirkland_Manholes-2157	100.18	271.7	0.71	8	PVC	0.01	594	3	6	9	1.5		
Kirkland_Main-801	Kirkland_Manholes-2160	86.23	Kirkland_Manholes-2159	84.71	220.9	0.69	8	PVC	0.01	585	1	6	8	1.3		
Kirkland_Main-802	Kirkland_Manholes-2157	100.18	Kirkland_Manholes-2159	84.71	251.5	6.15	8	PVC	0.01	1,749	16	52	68	3.9		
Kirkland_Main-804	Kirkland_Manholes-2134	124.65	Kirkland_Manholes-2135	110	281.7	5.2	8	PVC	0.01	1,608	6	26	32	2	SM14-Ex-EX221	
Kirkland_Main-805	Kirkland_Manholes-2133	139	Kirkland_Manholes-2134	124.65	362.7	3.96	8	PVC	0.01	1,402	3	19	22	1.6	SM14-Ex-EX221	
Kirkland_Main-806	Kirkland_Manholes-2132	159.52	Kirkland_Manholes-2131	158.3	73.8	1.65	15	PVC	0.01	4,846	671	1,546	2,217	45.8	SM14-Ex-EX236	
Kirkland_Main-807	Kirkland_Manholes-2126	177.6	Kirkland_Manholes-2127	166.38	202.1	5.55	8	PVC	0.01	1,661	23	4	27	1.6	SM14-Ex-EX235	
Kirkland_Main-808	Kirkland_Manholes-2125	177.39	Kirkland_Manholes-2132	159.52	237.1	7.54	12	PVC	0.01	5,707	653	1,518	2,171	38		
Kirkland_Main-809	Kirkland_Manholes-2304	192.91	Kirkland_Manholes-2125	177.39	277.3	5.6	12	PVC	0.01	4,918	653	1,514	2,167	44.1		
Kirkland_Main-810	Kirkland_Manholes-2136	110.1	Kirkland_Manholes-2137	107.9	254.4	0.86	10	PVC	0.01	1,189	1	8	10	0.8		
Kirkland_Main-811	Kirkland_Manholes-2137	107.9	Kirkland_Manholes-2080	100.3	293.2	2.59	10	PVC	0.01	2,058	6	16	23	1.1		
Kirkland_Main-812	Kirkland_Manholes-2080	100.3	Kirkland_Manholes-2138	94.8	252.5	2.18	10	PVC	0.01	1,887	47	66	113	6		
Kirkland_Main-813	Kirkland_Manholes-2138	94.8	Kirkland_Manholes-2140	88.47	239.3	2.65	10	PVC	0.01	2,079	53	99	152	7.3		
Kirkland_Main-814	Kirkland_Manholes-2140	88.47	Kirkland_Manholes-2141	73.53	356.2	4.19	10	PVC	0.01	2,618	62	165	227	8.7		
Kirkland_Main-815	Kirkland_Manholes-2141	73.53	Kirkland_Manholes-2142	68.99	196.1	2.31	10	PVC	0.01	1,945	99	214	313	16.1		
Kirkland_Main-816	Kirkland_Manholes-2142	68.99	Kirkland_Manholes-2143	61.9	284.3	2.49	10	PVC	0.01	2,019	105	288	394	19.5		
Kirkland_Main-817	Kirkland_Manholes-2876	267.92	Kirkland_Manholes-2877	259.41	173	4.92	8	PVC	0.01	1,564	5	20	25	1.6		
Kirkland_Main-818	Kirkland_Manholes-2877	259.41	Kirkland_Manholes-625	258	37.7	3.74	8	PVC	0.01	1,364	5	24	30	2.2		
Kirkland_Main-819	Kirkland_Manholes-2878	269.8	Kirkland_Manholes-2876	267.92	58	3.24	8	PVC	0.01	1,269	2	8	10	0.8		
Kirkland_Main-820	Kirkland_Manholes-2882	274.26	Kirkland_Manholes-2878	269.8	141	3.16	8	PVC	0.01	1,254	1	4	5	0.4		
Kirkland_Main-821	Kirkland_Manholes-1801	112.29	Kirkland_Manholes-1802	95.68	270.4	6.14	8	PVC	0.01	1,747	65	253	319	18.2	SM4	
Kirkland_Main-822	Kirkland_Manholes-1803	87.57	Kirkland_Manholes-1401	76.78	133.9	8.06	8	PVC	0.01	2,002	1	8	9	0.5	SM14-Ex-EX141	
Kirkland_Main-823	Kirkland_Manholes-1804	103.12	Kirkland_Manholes-1403	89.74	129.7	10.32	8	PVC	0.01	2,265	1	8	10	0.4	SM14-Ex-EX140	
Kirkland_Main-826	Kirkland_Manholes-1807	44.26	Kirkland_Manholes-1806	38.89	57.7	9.3	8	PVC	0.01	2,150	95	303	398	18.5	SM4	

2021 (6-year) with Proposed Improvements - Peak Hour Flow - Pipe Capacity Table

Label	Upstream Node	Upstream Invert Elevation (ft)	Downstream Node	Downstream Invert Elevation (ft)	Length (ft)	Slope (%)	Diameter (in)	Material	Manning's n	Design Capacity (gpm)	Domestic Flow (gpm)	I/I Flow (gpm)	Total Flow (gpm)	Percent Full (%)	CIP No.	Notes
Kirkland_Main-827	Kirkland_Manholes-589	126.06	Kirkland_Manholes-590	118.3	332.1	2.34	8	PVC	0.01	1,078	3	8	11	1	SM14-Ex-EX158	
Kirkland_Main-828	Kirkland_Manholes-1802	95.68	Kirkland_Manholes-1810	85.96	289.7	3.35	8	PVC	0.01	1,291	72	278	351	27.1	SM4	
Kirkland_Main-829	Kirkland_Manholes-1833	16.5	Kirkland_Manholes-1793	15.37	141.1	0.8	8	PVC	0.01	631	2	13	15	2.4		
Kirkland_Main-830	Kirkland_Manholes-1836	11	Kirkland_Manholes-1791	8.2	291.3	0.96	15	PVC	0.01	3,695	475	890	1,365	36.9		
Kirkland_Main-832	Kirkland_Manholes-1850	19.39	Kirkland_Manholes-1849	16.69	373.2	0.72	8	PVC	0.01	600	5	13	18	3	SM10	
Kirkland_Main-833	Kirkland_Manholes-1849	16.69	Kirkland_Manholes-1847	16.59	254.1	0.04	8	PVC	0.01	140	6	19	25	17.9	SM10	
Kirkland_Main-834	Kirkland_Manholes-1847	16.59	Kirkland_Manholes-1846	15.1	93.2	1.6	12	PVC	0.01	2,628	6	26	32	1.2	SM10	
Kirkland_Main-835	Kirkland_Manholes-2633	278.44	Kirkland_Manholes-2632	276.84	129.7	1.23	8	PVC	0.01	783	4	8	12	1.5	SM14-Ex-EX295	
Kirkland_Main-837	Kirkland_Manholes-2605	280.73	Kirkland_Manholes-2633	278.44	217.9	1.05	8	PVC	0.01	723	2	4	6	0.9	SM14-Ex-EX295	
Kirkland_Main-838	Kirkland_Manholes-2634	286.56	Kirkland_Manholes-2635	275.48	268.8	4.12	8	PVC	0.01	1,431	4	4	8	0.5	SM14-Ex-EX294	
Kirkland_Main-839	Kirkland_Manholes-2635	275.48	Kirkland_Manholes-2636	245.46	401.2	7.48	8	PVC	0.01	1,929	6	12	18	0.9	SM14-Ex-EX294	
Kirkland_Main-840	Kirkland_Manholes-2636	245.46	Kirkland_Manholes-2637	187.87	397.8	14.48	8	PVC	0.01	2,683	7	16	23	0.9	SM14-Ex-EX294	
Kirkland_Main-841	Kirkland_Manholes-2640	93.15	Kirkland_Manholes-2641	88.89	86.7	4.91	8	PVC	0.01	1,563	6	18	24	1.6		
Kirkland_Main-842	Kirkland_Manholes-2639	115.66	Kirkland_Manholes-2640	93.15	98.6	22.84	8	PVC	0.01	3,369	4	12	16	0.5		
Kirkland_Main-843	Kirkland_Manholes-2638	117.25	Kirkland_Manholes-2639	115.66	47.5	3.35	8	PVC	0.01	1,290	2	6	8	0.6		
Kirkland_Main-844	Kirkland_Manholes-2643	117.26	Kirkland_Manholes-2642	102.55	182.7	8.05	8	PVC	0.01	2,001	2	6	8	0.4		
Kirkland_Main-848	Kirkland_Manholes-2645	79.04	Kirkland_Manholes-2644	74.88	115.7	3.59	8	PVC	0.01	1,337	8	37	45	3.4		
Kirkland_Main-850	Kirkland_Manholes-1481	462.54	Kirkland_Manholes-1482	457.77	84.3	5.66	8	PVC	0.01	1,677	4	20	25	1.5	SM14-Ex-EX268	
Kirkland_Main-851	Kirkland_Manholes-1495	496.81	Kirkland_Manholes-1484	495.36	362.4	0.4	8	PVC	0.01	446	1	4	5	1.1		
Kirkland_Main-852	Kirkland_Manholes-1484	495.36	Kirkland_Manholes-1485	486.98	151.8	5.52	8	PVC	0.01	1,657	6	33	39	2.3		
Kirkland_Main-853	Kirkland_Manholes-1485	486.98	Kirkland_Manholes-1486	483.92	112.4	2.72	8	PVC	0.01	1,163	14	49	63	5.4		
Kirkland_Main-854	Kirkland_Manholes-1486	483.92	Kirkland_Manholes-1488	482.18	104.3	1.67	8	PVC	0.01	910	16	53	69	7.6		
Kirkland_Main-855	Kirkland_Manholes-1488	482.18	Kirkland_Manholes-1489	480.6	353.4	0.45	8	PVC	0.01	471	20	61	81	17.2		
Kirkland_Main-856	Kirkland_Manholes-1487	483.25	Kirkland_Manholes-1488	482.18	163.9	0.65	8	PVC	0.01	570	2	4	6	1		
Kirkland_Main-857	Kirkland_Manholes-1489	480.6	Kirkland_Manholes-2029	479.06	117.8	1.31	8	PVC	0.01	806	21	65	87	10.7		
Kirkland_Main-858	Kirkland_Manholes-1490	499.13	Kirkland_Manholes-1492	491.87	290.5	2.5	8	PVC	0.01	1,115	3	4	7	0.6		
Kirkland_Main-859	Kirkland_Manholes-1492	491.87	Kirkland_Manholes-1491	489.53	101	2.32	8	PVC	0.01	1,073	4	8	13	1.2		
Kirkland_Main-860	Kirkland_Manholes-1491	489.53	Kirkland_Manholes-1485	486.98	404.5	0.63	8	PVC	0.01	560	6	12	19	3.3		
Kirkland_Main-861	Kirkland_Manholes-1493	479.91	Kirkland_Manholes-2025	477	402.9	0.72	8	PVC	0.01	599	7	8	15	2.5		
Kirkland_Main-862	Kirkland_Manholes-1494	496.1	Kirkland_Manholes-1484	495.36	68.3	1.08	8	PVC	0.01	734	5	24	29	3.9		
Kirkland_Main-865	Kirkland_Manholes-2234	145.49	Kirkland_Manholes-2235	140.92	280.9	1.63	8	PVC	0.01	899	3	6	9	1.1	SM14-Ex-EX221	
Kirkland_Main-866	Kirkland_Manholes-2235	140.92	Kirkland_Manholes-2133	139	112.7	1.7	8	PVC	0.01	920	3	13	16	1.7	SM14-Ex-EX221	
Kirkland_Main-867	Kirkland_Manholes-2236	23.9	Kirkland_Manholes-2230	23.3	57.5	1.04	8	PVC	0.01	720	0	6	6	0.9		
Kirkland_Main-868	Kirkland_Manholes-2702	256.62	Kirkland_Manholes-1633	254.8	313.1	0.58	8	PVC	0.01	538	6	12	18	3.4	SM14-Ex-EX204	
Kirkland_Main-869	Kirkland_Manholes-1634	223.49	Kirkland_Manholes-1635	192.35	312.2	9.97	8	PVC	0.01	2,227	271	863	1,134	50.9	SM7	
Kirkland_Main-870	Kirkland_Manholes-1635	192.35	Kirkland_Manholes-1638	164.94	265.5	10.33	8	PVC	0.01	2,266	273	867	1,140	50.3	SM7	
Kirkland_Main-871	Kirkland_Manholes-1636	172.84	Kirkland_Manholes-1637	170.82	135.8	1.49	8	PVC	0.01	860	1	4	5	0.6		
Kirkland_Main-872	Kirkland_Manholes-1637	170.82	Kirkland_Manholes-1639	169.94	172.1	0.51	8	PVC	0.01	504	2	8	10	2		
Kirkland_Main-873	Kirkland_Manholes-1639	169.94	Kirkland_Manholes-1638	164.94	235.7	2.12	8	PVC	0.01	1,027	18	98	116	11.3	SM14-Ex-EX202	
Kirkland_Main-874	Kirkland_Manholes-1638	164.94	Kirkland_Manholes-1642	158.76	65.1	9.49	8	PVC	0.01	2,172	292	968	1,260	58	SM7	
Kirkland_Main-875	Kirkland_Manholes-1641	205.91	Kirkland_Manholes-1640	188.59	221.5	7.82	8	PVC	0.01	1,971	2	4	6	0.3	SM14-Ex-EX203	
Kirkland_Main-877	Kirkland_Manholes-1643	156.25	Kirkland_Manholes-1648	152.03	150	2.81	8	PVC	0.01	1,183	1	8	10	0.8	SM14-Ex-EX196	
Kirkland_Main-878	Kirkland_Manholes-1644	159.14	O-25	154.59	17.5	26	8	PVC	0.01	3,595	19	57	76	2.1		
Kirkland_Main-879	Kirkland_Manholes-1645	171.46	Kirkland_Manholes-1644	159.14	257.8	4.78	8	PVC	0.01	1,541	19	53	72	4.6		
Kirkland_Main-880	Kirkland_Manholes-1625	179.1	Kirkland_Manholes-1645	171.46	179.3	4.26	8	PVC	0.01	1,455	12	49	61	4.2		
Kirkland_Main-881	Kirkland_Manholes-1647	165.32	O-24	163.59	78.9	2.18	8	PVC	0.01	1,042	0	4	4	0.4	SM14-Ex-EX175	
Kirkland_Main-882	Kirkland_Manholes-1676	98.96	Kirkland_Manholes-1677	88.12	84.8	12.79	8	PVC	0.01	2,521	24	33	57	2.3		
Kirkland_Main-883	Kirkland_Manholes-1678	99.76	Kirkland_Manholes-1676	98.96	128.1	0.62	8	PVC	0.01	557	20	16	36	6.5		
Kirkland_Main-884	Kirkland_Manholes-1679	107.21	Kirkland_Manholes-1678	99.76	181.8	4.1	8	PVC	0.01	1,427	20	8	28	2		
Kirkland_Main-885	Kirkland_Manholes-1683	75.33	Kirkland_Manholes-1682	74.03	148.9	0.87	8	PVC	0.01	659	3	16	19	2.9		
Kirkland_Main-886	Kirkland_Manholes-1682	74.03	Kirkland_Manholes-1681	72.36	31.7	5.27	8	PVC	0.01	1,619	3	25	28	1.7		
Kirkland_Main-887	Kirkland_Manholes-602	90.22	Kirkland_Manholes-1680	83.64	138.4	4.75	8	PVC	0.01	1,537	95	400	494	32.2	SM5	
Kirkland_Main-888	Kirkland_Manholes-1680	83.64	Kirkland_Manholes-1681	72.36	151.4	7.45	8	PVC	0.01	1,925	96	408	504	26.2	SM5	
Kirkland_Main-889	Kirkland_Manholes-600	91.95	Kirkland_Manholes-1687	86.12	197.8	2.95	8	PVC	0.01	1,210	121	379	500	41.3	SM14-Ex-EX117	
Kirkland_Main-890	Kirkland_Manholes-1788	86.3	Kirkland_Manholes-727	84.25	363.6	0.56	8	PVC	0.01	529	14	132	146	27.6	SM14-Ex-EX167	
Kirkland_Main-891	Kirkland_Manholes-1686	60.42	Kirkland_Manholes-1685	57.24	38.9	8.17	8	PVC	0.01	2,016	0	8	8	0.4		
Kirkland_Main-892	Kirkland_Manholes-1681	72.36	Kirkland_Manholes-1685	57.24	220.4	6.86	8	PVC	0.01	1,846	99	441	540	29.3	SM5	
Kirkland_Main-893	Kirkland_Manholes-1687	86.12	Kirkland_Manholes-727	84.25	76.5	2.45	8	PVC	0.01	1,103	128	396	523	47.5	SM14-Ex-EX117	
Kirkland_Main-894	Kirkland_Manholes-1688	86.4	Kirkland_Manholes-1687	86.26	34.9	0.4	8	PVC	0.01	446	7	8	15	3.4		Drop Connection
Kirkland_Main-895	Kirkland_Manholes-621	70.36	Kirkland_Manholes-618	51.3	271.9	7.01	8	PVC	0.01	1,867	40	29	69	3.7	SM14-Ex-EX161	
Kirkland_Main-896	Kirkland_Manholes-617	67.92	Kirkland_Manholes-618	51.3	164.3	10.11	8	PVC	0.01	2,242	7	16	23	1	SM14-Ex-EX162	
Kirkland_Main-897	Kirkland_Manholes-1690	47.42	Kirkland_Manholes-1689	43.75	38.1	9.62	8	PVC	0.01	2,187	29	16	45	2.1	SM14-Ex-EX163	

2021 (6-year) with Proposed Improvements - Peak Hour Flow - Pipe Capacity Table

Label	Upstream Node	Upstream Invert Elevation (ft)	Downstream Node	Downstream Invert Elevation (ft)	Length (ft)	Slope (%)	Diameter (in)	Material	Manning's n	Design Capacity (gpm)	Domestic Flow (gpm)	I/I Flow (gpm)	Total Flow (gpm)	Percent Full (%)	CIP No.	Notes
Kirkland_Main-898	Kirkland_Manholes-2864	27	SOUTHBAY_WETWELL	22	7.5	67.05	8	PVC	0.01	5,773	14	27	41	0.7	SM14-Ex-EX314	WW Influent Pipe
Kirkland_Main-900	Kirkland_Manholes-1691	49.07	Kirkland_Manholes-1690	47.42	170.4	0.97	8	PVC	0.01	694	28	8	37	5.3	SM14-Ex-EX163	
Kirkland_Main-901	Kirkland_Manholes-618	51.3	Kirkland_Manholes-619	48.43	55.8	5.15	8	PVC	0.01	1,600	47	54	100	6.3	SM14-Ex-EX161	
Kirkland_Main-902	Kirkland_Manholes-619	48.43	Kirkland_Manholes-1689	43.75	128.1	3.65	8	PVC	0.01	1,347	47	78	125	9.3	SM14-Ex-EX161	
Kirkland_Main-903	Kirkland_Manholes-1693	36.33	Kirkland_Manholes-1692	35.9	53.8	0.8	8	PVC	0.01	630	4	8	12	1.9		
Kirkland_Main-905	Kirkland_Manholes-1809	70.83	Kirkland_Manholes-1703	58	295.2	4.35	8	PVC	0.01	1,470	2	8	10	0.7	SM14-Ex-EX153	
Kirkland_Main-910	Kirkland_Manholes-1707	126.28	Kirkland_Manholes-1706	124.78	10	14.96	12	PVC	0.01	8,041	17	115	132	1.6	SM14-Ex-EX196	
Kirkland_Main-911	Kirkland_Manholes-1710	134.24	Kirkland_Manholes-1709	133.97	34.7	0.78	12	PVC	0.01	1,833	14	82	96	5.2	SM14-Ex-EX196	
Kirkland_Main-912	Kirkland_Manholes-1708	148.34	Kirkland_Manholes-1709	133.97	305.2	4.71	12	PVC	0.01	4,511	2	16	18	0.4	SM14-Ex-EX197	
Kirkland_Main-913	Kirkland_Manholes-1709	133.97	Kirkland_Manholes-1707	126.28	136.1	5.65	12	PVC	0.01	4,942	16	107	123	2.5	SM14-Ex-EX196	
Kirkland_Main-914	Kirkland_Manholes-2281	374.95	Kirkland_Manholes-2263	374.13	166.2	0.49	8	PVC	0.01	495	0	4	4	0.8	SM14-Ex-EX212	
Kirkland_Main-915	Kirkland_Manholes-2283	405.87	Kirkland_Manholes-2282	401.71	113.4	3.67	8	PVC	0.01	1,350	6	20	26	1.9		
Kirkland_Main-916	Kirkland_Manholes-2295	415.45	Kirkland_Manholes-2294	370.88	306.7	14.53	8	PVC	0.01	2,688	3	8	11	0.4		
Kirkland_Main-917	Kirkland_Manholes-2294	370.88	Kirkland_Manholes-2293	362.58	254.1	3.27	8	PVC	0.01	1,274	4	12	16	1.3		
Kirkland_Main-918	Kirkland_Manholes-2298	374.75	Kirkland_Manholes-2297	358.91	231	6.86	8	PVC	0.01	1,846	5	12	17	0.9	SM14-Ex-EX210	
Kirkland_Main-919	Kirkland_Manholes-2297	358.91	Kirkland_Manholes-2296	354.23	230.5	2.03	8	PVC	0.01	1,005	6	16	22	2.2	SM14-Ex-EX210	
Kirkland_Main-920	Kirkland_Manholes-2772	308.23	O-3	307.9	81.9	0.4	8	PVC	0.01	446	50	115	165	36.9		Drop Connection
Kirkland_Main-921	Kirkland_Manholes-2293	362.58	Kirkland_Manholes-2296	354.23	294.7	2.83	8	PVC	0.01	1,187	10	33	43	3.6		
Kirkland_Main-922	Kirkland_Manholes-2299	342.7	Kirkland_Manholes-2300	337.19	153.2	3.6	8	PVC	0.01	1,337	17	57	74	5.6	SM14-Ex-EX206	
Kirkland_Main-923	Kirkland_Manholes-2296	354.23	Kirkland_Manholes-2299	342.7	146.7	7.86	8	PVC	0.01	1,976	17	53	70	3.5	SM14-Ex-EX206	
Kirkland_Main-924	Kirkland_Manholes-2264	383.3	Kirkland_Manholes-2263	374.13	85.7	10.7	8	PVC	0.01	2,307	264	724	988	42.8	SM14-Ex-EX248	
Kirkland_Main-925	Kirkland_Manholes-2432	257.14	Kirkland_Manholes-2312	256.91	169.1	0.14	8	PVC	0.01	260	2	4	6	2.3		
Kirkland_Main-926	Kirkland_Manholes-2312	256.91	Kirkland_Manholes-2311	256.52	196.4	0.2	8	PVC	0.01	314	3	9	12	3.8		
Kirkland_Main-927	Kirkland_Manholes-2282	401.71	Kirkland_Manholes-2264	383.3	409.8	4.49	8	PVC	0.01	1,494	264	720	984	65.8	SM14-Ex-EX248	
Kirkland_Main-928	Kirkland_Manholes-2288	423.18	Kirkland_Manholes-2286	420.26	97.3	3	8	PVC	0.01	1,221	3	8	11	0.9		
Kirkland_Main-929	Kirkland_Manholes-2289	426.62	Kirkland_Manholes-2288	423.18	150.1	2.29	8	PVC	0.01	1,067	1	4	5	0.5		
Kirkland_Main-930	Kirkland_Manholes-2286	420.26	Kirkland_Manholes-2287	418.83	164.5	0.87	8	PVC	0.01	657	4	12	16	2.5		
Kirkland_Main-931	Kirkland_Manholes-2287	418.83	Kirkland_Manholes-2283	405.87	87.5	14.81	8	PVC	0.01	2,714	6	16	22	0.8		
Kirkland_Main-932	Kirkland_Manholes-1585	238.49	Kirkland_Manholes-1586	212.55	318.9	8.13	8	PVC	0.01	2,011	1	4	5	0.3	SM14-Ex-EX173	
Kirkland_Main-933	Kirkland_Manholes-1586	212.55	Kirkland_Manholes-1587	210.95	268.2	0.6	8	PVC	0.01	545	3	8	11	2	SM14-Ex-EX173	
Kirkland_Main-934	Kirkland_Manholes-1589	233.01	Kirkland_Manholes-1587	210.95	318.8	6.92	8	PVC	0.01	1,855	67	212	279	15	SM14-Ex-EX171	
Kirkland_Main-935	Kirkland_Manholes-1587	210.95	Kirkland_Manholes-1603	202.22	137.6	6.34	8	PVC	0.01	1,776	73	228	301	17	SM14-Ex-EX172	
Kirkland_Main-936	Kirkland_Manholes-1588	231.21	Kirkland_Manholes-1587	230.56	162.2	0.4	8	PVC	0.01	446	2	4	6	1.4	SM14-Ex-EX172	Drop Connection
Kirkland_Main-938	Kirkland_Manholes-1590	241.99	Kirkland_Manholes-1589	233.01	173.6	5.17	8	PVC	0.01	1,603	66	208	274	17.1	SM14-Ex-EX171	
Kirkland_Main-939	Kirkland_Manholes-1591	253.12	Kirkland_Manholes-1590	241.99	399.8	2.78	8	PVC	0.01	1,176	64	203	268	22.7	SM14-Ex-EX171	
Kirkland_Main-940	Kirkland_Manholes-1592	255.76	Kirkland_Manholes-1591	253.12	306.5	0.86	8	PVC	0.01	654	61	199	260	39.8	SM14-Ex-EX124	
Kirkland_Main-942	Kirkland_Manholes-1593	256.67	Kirkland_Manholes-1592	255.76	194.7	0.47	8	PVC	0.01	482	45	159	203	42.2	SM14-Ex-EX131	
Kirkland_Main-943	Kirkland_Manholes-1594	254.46	Kirkland_Manholes-1595	245.33	353	2.59	8	PVC	0.01	1,134	3	4	7	0.6	SM14-Ex-EX130	
Kirkland_Main-944	Kirkland_Manholes-1595	245.33	Kirkland_Manholes-1596	228.98	200	8.17	8	PVC	0.01	2,016	5	8	13	0.6	SM14-Ex-EX130	
Kirkland_Main-945	Kirkland_Manholes-1596	228.98	Kirkland_Manholes-1597	180.84	398.5	12.08	8	PVC	0.01	2,450	6	12	19	0.8	SM14-Ex-EX130	
Kirkland_Main-946	Kirkland_Manholes-1601	173.67	Kirkland_Manholes-1598	169.75	176.3	2.22	8	PVC	0.01	1,051	61	167	228	21.7	SM14-Ex-EX121	
Kirkland_Main-947	Kirkland_Manholes-1599	200.11	Kirkland_Manholes-1598	169.75	271.2	11.19	8	PVC	0.01	2,359	4	8	12	0.5	SM14-Ex-EX170	
Kirkland_Main-948	Kirkland_Manholes-379	279.26	Kirkland_Manholes-380	277.21	303.7	0.67	8	PVC	0.01	579	3	8	11	1.9		
Kirkland_Main-949	Kirkland_Manholes-378	285.63	Kirkland_Manholes-379	279.26	366.8	1.74	8	PVC	0.01	929	1	4	5	0.6		
Kirkland_Main-950	Kirkland_Manholes-377	262.82	Kirkland_Manholes-376	239.8	319.8	7.2	8	PVC	0.01	1,892	2	4	6	0.3		
Kirkland_Main-951	Kirkland_Manholes-376	239.8	Kirkland_Manholes-375	234.87	251.6	1.96	8	PVC	0.01	987	67	240	307	31.1		
Kirkland_Main-953	Kirkland_Manholes-382	308.23	Kirkland_Manholes-381	307.41	91.4	0.9	8	PVC	0.01	668	3	8	11	1.6		
Kirkland_Main-954	Kirkland_Manholes-381	307.41	Kirkland_Manholes-383	304.37	123.9	2.45	8	PVC	0.01	1,104	3	12	15	1.4		
Kirkland_Main-955	Kirkland_Manholes-383	304.37	Kirkland_Manholes-384	296.91	253.7	2.94	8	PVC	0.01	1,209	4	16	21	1.7		
Kirkland_Main-956	Kirkland_Manholes-384	296.91	Kirkland_Manholes-424	292.81	99.3	4.13	8	PVC	0.01	1,432	6	20	26	1.8		
Kirkland_Main-957	Kirkland_Manholes-873	311.45	Kirkland_Manholes-385	303.54	299	2.65	8	PVC	0.01	1,147	2	4	6	0.5	SM14-Ex-EX33	
Kirkland_Main-958	Kirkland_Manholes-385	303.54	Kirkland_Manholes-387	300.3	93.5	3.46	8	PVC	0.01	1,312	3	8	11	0.9	SM14-Ex-EX33	
Kirkland_Main-959	Kirkland_Manholes-386	300.85	Kirkland_Manholes-387	300.3	138.6	0.4	8	PVC	0.01	444	3	4	7	1.5	SM14-Ex-EX33	
Kirkland_Main-960	Kirkland_Manholes-387	300.3	Kirkland_Manholes-388	297.69	129.3	2.02	8	PVC	0.01	1,002	7	16	23	2.3	SM14-Ex-EX33	
Kirkland_Main-962	Kirkland_Manholes-2611	254.27	Kirkland_Manholes-2612	250.12	152.9	2.71	8	PVC	0.01	1,162	3	4	7	0.6	SM14-Ex-EX297	
Kirkland_Main-963	Kirkland_Manholes-1075	291.84	Kirkland_Manholes-1121	289.91	99	1.95	8	PVC	0.01	984	49	134	359	36.5		
Kirkland_Main-964	Kirkland_Manholes-1121	289.91	Kirkland_Manholes-1068	279.38	106.4	9.89	8	PVC	0.01	2,218	50	138	364	16.4		
Kirkland_Main-966	Kirkland_Manholes-1105	155.49	Kirkland_Manholes-1052	151.4	310	1.32	8	PVC	0.01	810	136	303	438	54.1		
Kirkland_Main-967	Kirkland_Manholes-1108	160.8	Kirkland_Manholes-1105	155.49	333.3	1.59	8	PVC	0.01	890	10	13	23	2.6		
Kirkland_Main-968	Kirkland_Manholes-1104	175.28	Kirkland_Manholes-1106	168.9	388	1.64	18	PVC	0.01	7,859	692	2,169	2,861	36.4		
Kirkland_Main-969	Kirkland_Manholes-1109	162.78	Kirkland_Manholes-1108	160.8	303.1	0.65	8	PVC	0.01	570	1	9	10	1.8		
Kirkland_Main-970	Kirkland_Manholes-1110	163.51	Kirkland_Manholes-1109	162.78	317.4	0.23	8	PVC	0.01	338	1	4	5	1.6		

2021 (6-year) with Proposed Improvements - Peak Hour Flow - Pipe Capacity Table

Label	Upstream Node	Upstream Invert Elevation (ft)	Downstream Node	Downstream Invert Elevation (ft)	Length (ft)	Slope (%)	Diameter (in)	Material	Manning's n	Design Capacity (gpm)	Domestic Flow (gpm)	I/I Flow (gpm)	Total Flow (gpm)	Percent Full (%)	CIP No.	Notes
Kirkland_Main-972	Kirkland_Manholes-1128	162.57	O-7	162.29	71	0.4	24	PVC	0.01	8,346	331	712	1,219	14.6	SM14-Ex-EX4	
Kirkland_Main-973	Kirkland_Manholes-1127	163.92	Kirkland_Manholes-1128	162.57	132.6	1.02	24	PVC	0.01	13,318	331	704	1,211	9.1	SM14-Ex-EX4	
Kirkland_Main-974	Kirkland_Manholes-1086	198.2	Kirkland_Manholes-1122	184.29	391.8	3.55	8	PVC	0.01	1,328	11	49	60	4.5		
Kirkland_Main-975	Kirkland_Manholes-1122	184.29	Kirkland_Manholes-1123	182.63	257.7	0.64	24	PVC	0.01	10,594	222	635	1,033	9.7	SM14-Ex-EX4	
Kirkland_Main-976	Kirkland_Manholes-1130	185.43	Kirkland_Manholes-1122	185.35	20.3	0.4	12	PVC	0.01	1,314	199	582	957	72.8	SM14-Ex-EX320	Drop Connection
Kirkland_Main-977	Kirkland_Manholes-1123	182.63	Kirkland_Manholes-1124	177.02	186.2	3.01	24	PVC	0.01	22,913	229	639	1,044	4.6	SM14-Ex-EX4	
Kirkland_Main-978	Kirkland_Manholes-1124	177.02	Kirkland_Manholes-1125	167.88	251.4	3.64	24	PVC	0.01	25,165	295	675	1,146	4.6	SM14-Ex-EX4	
Kirkland_Main-979	Kirkland_Manholes-1125	167.88	Kirkland_Manholes-1126	164.51	134.8	2.5	24	PVC	0.01	20,870	331	696	1,203	5.8	SM14-Ex-EX4	
Kirkland_Main-980	Kirkland_Manholes-2840	90.84	Kirkland_Manholes-2841	31.53	332.1	17.86	8	PVC	0.01	2,980	3	12	15	0.5	SM14-Ex-EX310	
Kirkland_Main-981	Kirkland_Manholes-2851	10.8	Kirkland_Manholes-2852	10.72	17.2	0.47	18	PVC	0.01	4,181	287	788	1,076	25.7	SM14-Ex-EX289	
Kirkland_Main-982	Kirkland_Manholes-2853	25.84	Kirkland_Manholes-2852	10.72	47.1	32.11	8	PVC	0.01	3,995	0	6	6	0.2	SM14-Ex-EX289	
Kirkland_Main-983	Kirkland_Manholes-2852	10.72	KC_Manholes-18	10.29	84.8	0.51	18	PVC	0.01	4,364	287	800	1,088	24.9	SM14-Ex-EX289	
Kirkland_Main-984	Kirkland_Manholes-2788	251.6	Kirkland_Manholes-2789	247.4	283.4	1.48	8	PVC	0.01	858	17	94	111	12.9	SM14-Ex-EX313	
Kirkland_Main-985	Kirkland_Manholes-2789	247.4	Kirkland_Manholes-2790	235.81	170.4	6.8	8	PVC	0.01	1,839	19	98	117	6.4	SM14-Ex-EX313	
Kirkland_Main-987	Kirkland_Manholes-2790	235.81	Kirkland_Manholes-2791	226.53	127.8	7.26	8	PVC	0.01	1,900	20	102	122	6.4	SM14-Ex-EX313	
Kirkland_Main-988	Kirkland_Manholes-2791	226.53	Kirkland_Manholes-2792	199.25	298.7	9.13	8	PVC	0.01	2,131	22	106	127	6	SM14-Ex-EX313	
Kirkland_Main-989	Kirkland_Manholes-2794	201.04	Kirkland_Manholes-2792	199.25	290.5	0.62	8	PVC	0.01	553	3	8	11	2	SM14-Ex-EX312	
Kirkland_Main-991	Kirkland_Manholes-2795	201.42	Kirkland_Manholes-2794	201.04	162	0.23	8	PVC	0.01	341	1	4	5	1.6	SM14-Ex-EX312	
Kirkland_Main-992	Kirkland_Manholes-2792	199.25	Kirkland_Manholes-2793	190.95	116.2	7.14	8	PVC	0.01	1,885	33	118	151	8	SM14-Ex-EX313	
Kirkland_Main-993	Kirkland_Manholes-2793	190.95	Kirkland_Manholes-2803	158.22	135.7	24.12	8	PVC	0.01	3,462	34	122	156	4.5	SM14-Ex-EX313	
Kirkland_Main-994	Kirkland_Manholes-2842	26.9	Kirkland_Manholes-2850	13.3	475.2	2.86	24	PVC	0.01	22,330	518	1,242	1,832	8.2	SM14-Ex-EX309	
Kirkland_Main-995	Kirkland_Manholes-2850	13.3	KC_Manholes-18	10.29	41.7	7.21	24	PVC	0.01	35,453	520	1,248	1,839	5.2	SM14-Ex-EX309	
Kirkland_Main-996	Kirkland_Manholes-2856	18.03	Kirkland_Manholes-2845	16.72	134.6	0.98	8	PVC	0.01	696	13	14	27	3.9	SM14-Ex-EX315	
Kirkland_Main-997	Kirkland_Manholes-2857	19.7	Kirkland_Manholes-2856	18.03	135.5	1.23	8	PVC	0.01	783	13	9	22	2.8	SM14-Ex-EX315	
Kirkland_Main-998	Kirkland_Manholes-1928	375.97	Kirkland_Manholes-1929	374.67	53.7	2.42	12	PVC	0.01	3,235	159	549	708	21.9	SM14-Ex-EX205	
Kirkland_Main-999	Kirkland_Manholes-1929	374.67	Kirkland_Manholes-1579	359.44	398.3	3.82	12	PVC	0.01	4,065	197	614	812	20	SM14-Ex-EX205	
Kirkland_Main-1000	Kirkland_Manholes-1930	369.31	Kirkland_Manholes-1931	367.07	97.4	2.3	8	PVC	0.01	1,069	3	8	11	1		
Kirkland_Main-1001	Kirkland_Manholes-1931	367.07	Kirkland_Manholes-1932	360.4	233.1	2.86	8	PVC	0.01	1,193	4	12	16	1.4		
Kirkland_Main-1003	Kirkland_Manholes-1932	360.4	Kirkland_Manholes-1954	357.36	158.2	1.92	8	PVC	0.01	977	4	16	20	2.1		
Kirkland_Main-1004	Kirkland_Manholes-1935	274.07	Kirkland_Manholes-1881	267.11	156.7	4.44	8	PVC	0.01	1,486	35	85	121	8.1		
Kirkland_Main-1005	Kirkland_Manholes-1951	275.06	Kirkland_Manholes-1935	274.07	209.5	0.47	8	PVC	0.01	485	19	45	63	13.1		
Kirkland_Main-1006	Kirkland_Manholes-1936	301.29	Kirkland_Manholes-1935	274.07	237.6	11.46	8	PVC	0.01	2,387	15	37	51	2.2		
Kirkland_Main-1007	Kirkland_Manholes-1933	343.68	Kirkland_Manholes-1934	342.88	296	0.27	8	PVC	0.01	367	7	33	40	10.9		
Kirkland_Main-1008	Kirkland_Manholes-1954	357.36	Kirkland_Manholes-1934	342.88	118.8	12.19	8	PVC	0.01	2,462	5	20	25	1		
Kirkland_Main-1009	Kirkland_Manholes-1934	342.88	Kirkland_Manholes-1961	341.24	125.1	1.31	8	PVC	0.01	807	12	57	69	8.6		
Kirkland_Main-1010	Kirkland_Manholes-1938	323.43	Kirkland_Manholes-1936	301.29	243	9.11	8	PVC	0.01	2,128	12	33	45	2.1		
Kirkland_Main-1011	Kirkland_Manholes-1939	324.34	Kirkland_Manholes-1938	323.43	100	0.91	8	PVC	0.01	673	10	24	34	5.1		
Kirkland_Main-1012	Kirkland_Manholes-1937	332.23	Kirkland_Manholes-1938	323.43	194.4	4.53	8	PVC	0.01	1,500	2	4	6	0.4		
Kirkland_Main-1013	Kirkland_Manholes-1940	363.18	Kirkland_Manholes-1941	361.64	56.6	2.72	8	PVC	0.01	1,163	0	4	4	0.4		
Kirkland_Main-1014	Kirkland_Manholes-391	302.9	Kirkland_Manholes-389	295.78	243.6	2.92	8	PVC	0.01	1,205	36	130	166	13.8	SM14-Ex-EX50	
Kirkland_Main-1015	Kirkland_Manholes-389	295.78	Kirkland_Manholes-393	288.03	97.8	7.93	8	PVC	0.01	1,985	46	155	200	10.1	SM14-Ex-EX50	
Kirkland_Main-1016	Kirkland_Manholes-393	288.03	Kirkland_Manholes-380	277.21	135.7	7.97	8	PVC	0.01	1,991	49	163	212	10.6	SM14-Ex-EX50	
Kirkland_Main-1017	Kirkland_Manholes-395	253.88	Kirkland_Manholes-396	249.55	242.3	1.79	8	PVC	0.01	942	59	212	271	28.8		
Kirkland_Main-1018	Kirkland_Manholes-398	254.33	Kirkland_Manholes-397	247.33	147.9	4.73	8	PVC	0.01	1,534	1	4	5	0.3		
Kirkland_Main-1019	Kirkland_Manholes-396	249.55	Kirkland_Manholes-397	247.33	240.2	0.92	8	PVC	0.01	678	63	224	287	42.3		
Kirkland_Main-1020	Kirkland_Manholes-394	266.89	Kirkland_Manholes-395	253.88	150	8.67	8	PVC	0.01	2,076	56	187	244	11.7	SM14-Ex-EX50	
Kirkland_Main-1021	Kirkland_Manholes-380	277.21	Kirkland_Manholes-394	266.89	136.7	7.55	8	PVC	0.01	1,937	52	175	227	11.7	SM14-Ex-EX50	
Kirkland_Main-1022	Kirkland_Manholes-898	306.89	Kirkland_Manholes-899	305.17	102.3	1.68	8	PVC	0.01	914	1	8	9	1		
Kirkland_Main-1023	Kirkland_Manholes-899	305.17	Kirkland_Manholes-900	302.97	237.5	0.93	8	PVC	0.01	679	3	12	15	2.3		
Kirkland_Main-1024	Kirkland_Manholes-444	92.89	Kirkland_Manholes-443	91.49	172.9	0.81	8	PVC	0.01	634	5	43	48	7.6		
Kirkland_Main-1025	Kirkland_Manholes-525	156.27	Kirkland_Manholes-526	148.56	279.6	2.76	8	PVC	0.01	1,171	4	25	29	2.5	SM10	
Kirkland_Main-1027	Kirkland_Manholes-1198	189.72	Kirkland_Manholes-497	188.11	129.7	1.24	8	PVC	0.01	786	17	49	66	8.5	SM14-Ex-EX80	
Kirkland_Main-1030	Kirkland_Manholes-520	182.65	Kirkland_Manholes-519	157.09	301.6	8.48	8	PVC	0.01	2,053	5	16	21	1	SM10	
Kirkland_Main-1031	Kirkland_Manholes-499	185.94	Kirkland_Manholes-523	180.21	279.4	2.05	8	PVC	0.01	1,010	24	74	98	9.7	SM10	
Kirkland_Main-1032	Kirkland_Manholes-523	180.21	Kirkland_Manholes-522	152.47	278.9	9.95	8	PVC	0.01	2,224	26	82	109	4.9	SM10	
Kirkland_Main-1033	Kirkland_Manholes-522	152.47	Kirkland_Manholes-521	145.96	154.4	4.22	8	PVC	0.01	1,448	28	91	118	8.2	SM10	
Kirkland_Main-1034	Kirkland_Manholes-521	145.96	Kirkland_Manholes-518	138.7	160.6	4.52	8	PVC	0.01	1,499	29	99	128	8.5	SM10	
Kirkland_Main-1036	Kirkland_Manholes-518	138.7	Kirkland_Manholes-1179	123.76	316.8	4.72	8	PVC	0.01	1,531	37	132	169	11	SM10	
Kirkland_Main-1037	Kirkland_Manholes-519	157.09	Kirkland_Manholes-518	138.7	337.5	5.45	8	PVC	0.01	1,646	8	25	32	2	SM10	
Kirkland_Main-1041	Kirkland_Manholes-1235	275.6	Kirkland_Manholes-1233	274.4	201.2	0.6	8	PVC	0.01	545	3	8	11	2		
Kirkland_Main-1042	Kirkland_Manholes-1240	250.21	Kirkland_Manholes-1230	236.32	226.8	6.13	8	PVC	0.01	1,745	5	8	13	0.8	SM14-Ex-EX92	
Kirkland_Main-1043	Kirkland_Manholes-1243	249.45	Kirkland_Manholes-1242	244.28	74.2	6.97	8	PVC	0.01	1,862	1	4	6	0.3		

2021 (6-year) with Proposed Improvements - Peak Hour Flow - Pipe Capacity Table

Label	Upstream Node	Upstream Invert Elevation (ft)	Downstream Node	Downstream Invert Elevation (ft)	Length (ft)	Slope (%)	Diameter (in)	Material	Manning's n	Design Capacity (gpm)	Domestic Flow (gpm)	I/I Flow (gpm)	Total Flow (gpm)	Percent Full (%)	CIP No.	Notes
Kirkland_Main-1044	Kirkland_Manholes-1206	193.92	Kirkland_Manholes-1149	192.13	296.5	0.6	8	PVC	0.01	548	18	56	74	13.4	SM14-Ex-EX89	
Kirkland_Main-1049	Kirkland_Manholes-1268	189.24	Kirkland_Manholes-1269	174.05	110.9	13.69	8	PVC	0.01	2,609	4	16	21	0.8	SM14-Ex-EX107	
Kirkland_Main-1050	Kirkland_Manholes-1269	174.05	Kirkland_Manholes-1259	154.8	228.2	8.43	8	PVC	0.01	2,048	5	25	30	1.5	SM14-Ex-EX107	
Kirkland_Main-1051	Kirkland_Manholes-1267	201.75	Kirkland_Manholes-1268	189.24	323.1	3.87	8	PVC	0.01	1,387	4	8	12	0.9	SM14-Ex-EX107	
Kirkland_Main-1052	Kirkland_Manholes-1265	168.12	Kirkland_Manholes-1262	156.59	138.9	8.3	8	PVC	0.01	2,031	4	25	29	1.4		
Kirkland_Main-1053	Kirkland_Manholes-1497	270.45	Kirkland_Manholes-1499	268.92	211.1	0.72	8	PVC	0.01	600	18	57	75	12.5		
Kirkland_Main-1054	Kirkland_Manholes-1315	270.9	Kirkland_Manholes-1497	270.45	108.5	0.41	8	PVC	0.01	454	17	53	70	15.3		
Kirkland_Main-1055	Kirkland_Manholes-704	272.37	Kirkland_Manholes-145	271.65	145.7	0.49	8	PVC	0.01	496	14	37	50	10.1		
Kirkland_Main-1057	Kirkland_Manholes-1220	255.3	Kirkland_Manholes-1140	220.91	332.7	10.34	8	PVC	0.01	2,267	2	8	11	0.5	SM14-Ex-EX84	
Kirkland_Main-1058	Kirkland_Manholes-1222	248.84	Kirkland_Manholes-1142	218.06	350.4	8.79	8	PVC	0.01	2,090	4	8	12	0.6	SM14-Ex-EX85	
Kirkland_Main-1059	Kirkland_Manholes-1140	220.91	Kirkland_Manholes-1142	218.06	314	0.91	8	PVC	0.01	672	5	16	22	3.2	SM4	
Kirkland_Main-1061	Kirkland_Manholes-1224	232.76	Kirkland_Manholes-500	209.24	344.5	6.83	8	PVC	0.01	1,842	3	8	11	0.6	SM14-Ex-EX87	
Kirkland_Main-1062	Kirkland_Manholes-1085	204.43	Kirkland_Manholes-1130	185.43	381.7	4.98	8	PVC	0.01	1,573	174	578	928	59		
Kirkland_Main-1063	Kirkland_Manholes-1120	158.13	Kirkland_Manholes-712	157.06	229.6	0.47	8	PVC	0.01	481	31	12	42	8.8	SM14-Ex-EX1	
Kirkland_Main-1066	Kirkland_Manholes-1512	281.18	Kirkland_Manholes-1513	263.11	227.7	7.94	8	PVC	0.01	1,986	1	4	5	0.3	SM14-Ex-EX132	
Kirkland_Main-1067	Kirkland_Manholes-1161	78.67	Kirkland_Manholes-1162	78.51	20.6	0.78	15	PVC	0.01	3,326	78	404	482	14.5	SM14-Ex-EX77	
Kirkland_Main-1068	Kirkland_Manholes-1132	188.66	Kirkland_Manholes-1133	181.56	258.9	2.74	8	PVC	0.01	1,168	3	4	8	0.7	SM14-Ex-EX58	
Kirkland_Main-1069	Kirkland_Manholes-616	72.16	Kirkland_Manholes-617	67.92	242.5	1.75	8	PVC	0.01	932	4	8	12	1.3	SM14-Ex-EX162	
Kirkland_Main-1070	Kirkland_Manholes-1699	108.13	Kirkland_Manholes-1700	106.17	216.2	0.91	8	PVC	0.01	671	0	8	8	1.2	SM14-Ex-EX150	
Kirkland_Main-1071	Kirkland_Manholes-1700	106.17	Kirkland_Manholes-1802	95.68	325.3	3.22	8	PVC	0.01	1,266	4	16	21	1.6	SM14-Ex-EX150	
Kirkland_Main-1074	Kirkland_Manholes-1613	87.49	Kirkland_Manholes-1788	86.3	197.1	0.6	8	PVC	0.01	548	14	124	138	25.2	SM14-Ex-EX167	
Kirkland_Main-1075	Kirkland_Manholes-1793	15.37	Kirkland_Manholes-1794	12.63	22.1	12.39	8	PVC	0.01	2,482	30	19	49	2		
Kirkland_Main-1076	Kirkland_Manholes-1795	13.3	Kirkland_Manholes-1794	12.63	41.9	1.6	15	PVC	0.01	4,763	425	753	1,178	24.7		
Kirkland_Main-1077	Kirkland_Manholes-1789	14.67	Kirkland_Manholes-1790	14.6	18.2	0.38	21	PVC	0.01	5,726	418	734	1,152	20.1		
Kirkland_Main-1078	Kirkland_Manholes-1790	14.6	Kirkland_Manholes-1792	14.49	82.9	0.13	21	PVC	0.01	3,367	418	740	1,159	34.4		
Kirkland_Main-1079	Kirkland_Manholes-1791	8.2	PLAZA_WW	6	10.6	20.76	18	PVC	0.01	27,925	475	896	1,372	4.9	SM14-Ex-EX182	
Kirkland_Main-1080	Kirkland_Manholes-1792	14.49	Kirkland_Manholes-1795	13.3	199	0.6	21	PVC	0.01	7,159	419	747	1,166	16.3		
Kirkland_Main-1081	Kirkland_Manholes-1800	147.89	Kirkland_Manholes-1799	133.76	154.6	9.14	8	PVC	0.01	2,131	2	8	11	0.5	SM14-Ex-EX146	
Kirkland_Main-1082	Kirkland_Manholes-1799	133.76	Kirkland_Manholes-1798	126.65	165.5	4.3	8	PVC	0.01	1,461	6	25	31	2.1	SM14-Ex-EX146	
Kirkland_Main-1083	Kirkland_Manholes-1797	142.57	Kirkland_Manholes-1798	126.65	291.9	5.45	8	PVC	0.01	1,647	56	196	251	15.3	SM4	
Kirkland_Main-1084	Kirkland_Manholes-1796	160.8	Kirkland_Manholes-1797	142.57	315.3	5.78	8	PVC	0.01	1,695	52	179	232	13.7	SM4	
Kirkland_Main-1085	Kirkland_Manholes-1798	126.65	Kirkland_Manholes-1801	112.29	288.6	4.97	8	PVC	0.01	1,573	62	229	291	18.5	SM4	
Kirkland_Main-1086	Kirkland_Manholes-2191	134.63	Kirkland_Manholes-2190	132.39	117.1	1.91	8	PVC	0.01	975	4	16	20	2.1		
Kirkland_Main-1088	Kirkland_Manholes-2194	68	Kirkland_Manholes-2193	64.5	142	2.47	8	PVC	0.01	1,107	1	8	9	0.8	SM14-Ex-EX187	
Kirkland_Main-1089	Kirkland_Manholes-2193	64.5	Kirkland_Manholes-2145	63.1	194.7	0.72	8	PVC	0.01	598	5	41	46	7.7	SM14-Ex-EX187	
Kirkland_Main-1091	Kirkland_Manholes-2187	114.37	Kirkland_Manholes-2185	103.23	164.5	6.77	8	PVC	0.01	1,835	6	16	23	1.2	SM14-Ex-EX188	
Kirkland_Main-1092	Kirkland_Manholes-2185	103.23	Kirkland_Manholes-2184	75.09	227	12.4	8	PVC	0.01	2,482	35	66	101	4.1	SM14-Ex-EX188	
Kirkland_Main-1093	Kirkland_Manholes-2184	75.09	Kirkland_Manholes-2144	65.5	214.4	4.47	8	PVC	0.01	1,491	35	74	109	7.3	SM14-Ex-EX188	
Kirkland_Main-1094	Kirkland_Manholes-2199	42.12	Kirkland_Manholes-2201	34.26	130.3	6.03	8	PVC	0.01	1,731	55	6	62	3.6		
Kirkland_Main-1095	Kirkland_Manholes-2201	34.26	Kirkland_Manholes-2200	29.87	27.9	15.75	8	PVC	0.01	2,798	55	13	68	2.4		
Kirkland_Main-1096	Kirkland_Manholes-2098	53.6	Kirkland_Manholes-2097	45.25	198.1	4.22	8	PVC	0.01	1,448	2	6	9	0.6	SM14-Ex-EX233	
Kirkland_Main-1097	Kirkland_Manholes-2195	483.44	Kirkland_Manholes-2196	481.85	326.8	0.49	8	PVC	0.01	492	1	4	5	1.1		
Kirkland_Main-1098	Kirkland_Manholes-2196	481.85	Kirkland_Manholes-2197	480.89	188.7	0.51	8	PVC	0.01	503	2	8	10	2		
Kirkland_Main-1099	Kirkland_Manholes-2111	59.56	Kirkland_Manholes-2099	57.72	398	0.46	12	PVC	0.01	1,413	78	196	274	19.4	SM14-Ex-EX222	
Kirkland_Main-1100	Kirkland_Manholes-2100	58.67	Kirkland_Manholes-2099	57.72	62.5	1.52	8	PVC	0.01	869	9	18	28	3.2	SM14-Ex-EX234	
Kirkland_Main-1101	Kirkland_Manholes-2101	73.68	Kirkland_Manholes-2100	58.67	124.9	12.02	8	PVC	0.01	2,444	9	12	21	0.9		
Kirkland_Main-1102	Kirkland_Manholes-2102	127.52	Kirkland_Manholes-2101	73.68	250.6	21.48	8	PVC	0.01	3,268	4	6	11	0.3		
Kirkland_Main-1104	Kirkland_Manholes-2103	51.49	Kirkland_Manholes-2104	41.29	235.7	4.33	8	PVC	0.01	1,467	0	6	7	0.5	SM14-Ex-EX231	
Kirkland_Main-1105	Kirkland_Manholes-2447	28.08	Kirkland_Manholes-2448	25.41	138	1.94	12	PVC	0.01	2,892	1	6	8	0.3		
Kirkland_Main-1106	Kirkland_Manholes-2448	25.41	Kirkland_Manholes-2451	24.29	346.6	0.32	12	PVC	0.01	1,182	14	19	34	2.8		
Kirkland_Main-1107	Kirkland_Manholes-2449	27.6	Kirkland_Manholes-2448	25.41	29.8	7.34	8	PVC	0.01	1,910	11	6	17	0.9		
Kirkland_Main-1108	Kirkland_Manholes-2450	27.97	Kirkland_Manholes-2451	24.29	50.3	7.31	8	PVC	0.01	1,906	2	13	15	0.8		
Kirkland_Main-1109	Kirkland_Manholes-2491	35.69	Kirkland_Manholes-2450	27.97	197.9	3.9	8	PVC	0.01	1,393	1	6	8	0.5	SM14-Ex-EX278	
Kirkland_Main-1110	Kirkland_Manholes-2451	24.29	Kirkland_Manholes-2452	24.18	330.9	0.03	12	PVC	0.01	374	16	39	55	14.7		
Kirkland_Main-1111	Kirkland_Manholes-2452	24.18	Kirkland_Manholes-2454	23.57	255.1	0.24	12	PVC	0.01	1,016	25	58	84	8.3		
Kirkland_Main-1112	Kirkland_Manholes-2453	27.74	Kirkland_Manholes-2452	24.18	62.2	5.72	8	PVC	0.01	1,686	9	13	22	1.3		
Kirkland_Main-1113	Kirkland_Manholes-2093	44.98	Kirkland_Manholes-2453	27.74	236.1	7.3	8	PVC	0.01	1,905	8	6	14	0.7	SM14-Ex-EX276	
Kirkland_Main-1114	Kirkland_Manholes-2097	45.25	Kirkland_Manholes-2455	44.41	209.1	0.4	8	PVC	0.01	446	12	13	25	5.6	SM14-Ex-EX233	Drop Connection
Kirkland_Main-1115	Kirkland_Manholes-2455	26.2	Kirkland_Manholes-2454	23.57	36.4	7.21	8	PVC	0.01	1,893	14	19	33	1.7	SM14-Ex-EX233	
Kirkland_Main-1116	Kirkland_Manholes-2454	23.57	Kirkland_Manholes-2456	21.67	413.5	0.46	12	PVC	0.01	1,410	39	84	123	8.8		
Kirkland_Main-1117	Kirkland_Manholes-2457	26.27	Kirkland_Manholes-2456	21.67	49.5	9.28	8	PVC	0.01	2,148	8	19	27	1.3		
Kirkland_Main-1118	Kirkland_Manholes-2202	26.91	Kirkland_Manholes-2305	25.32	49.2	3.23	8	PVC	0.01	1,266	55	26	81	6.4		Drop Connection

2021 (6-year) with Proposed Improvements - Peak Hour Flow - Pipe Capacity Table

Label	Upstream Node	Upstream Invert Elevation (ft)	Downstream Node	Downstream Invert Elevation (ft)	Length (ft)	Slope (%)	Diameter (in)	Material	Manning's n	Design Capacity (gpm)	Domestic Flow (gpm)	I/I Flow (gpm)	Total Flow (gpm)	Percent Full (%)	CIP No.	Notes
Kirkland_Main-1119	Kirkland_Manholes-2205	23.1	Kirkland_Manholes-2306	15.63	44.6	16.73	8	PVC	0.01	2,884	7	32	40	1.4		Drop Connection
Kirkland_Main-1120	Kirkland_Manholes-2306	15.63	Kirkland_Manholes-2305	15.26	357	0.1	21	PVC	0.01	2,976	276	643	919	30.9		
Kirkland_Main-1121	Kirkland_Manholes-2307	15.73	Kirkland_Manholes-2306	15.63	136.3	0.07	21	PVC	0.01	2,504	269	604	873	34.8		
Kirkland_Main-1122	Kirkland_Manholes-2217	22.48	Kirkland_Manholes-2308	22.33	38	0.4	8	PVC	0.01	446	12	39	51	11.5		Drop Connection
Kirkland_Main-1123	Kirkland_Manholes-2308	15.98	Kirkland_Manholes-2307	15.73	271.4	0.09	21	PVC	0.01	2,806	259	598	857	30.5		
Kirkland_Main-1124	Kirkland_Manholes-2309	16.24	Kirkland_Manholes-2308	15.98	211.8	0.12	21	PVC	0.01	3,239	245	552	797	24.6		
Kirkland_Main-1125	Kirkland_Manholes-2313	16.39	Kirkland_Manholes-2309	16.24	162.2	0.09	21	PVC	0.01	2,811	240	546	785	27.9		
Kirkland_Main-1126	Kirkland_Manholes-2314	16.65	Kirkland_Manholes-2313	16.39	183.4	0.14	21	PVC	0.01	3,481	223	500	723	20.8		
Kirkland_Main-1127	Kirkland_Manholes-2315	16.77	Kirkland_Manholes-2314	16.65	235.7	0.05	21	PVC	0.01	2,086	202	416	618	29.6		
Kirkland_Main-1128	Kirkland_Manholes-2316	17.03	Kirkland_Manholes-2315	16.77	315.7	0.08	21	PVC	0.01	2,653	202	409	611	23		
Kirkland_Main-1129	Kirkland_Manholes-2317	17.2	Kirkland_Manholes-2316	17.03	183.4	0.09	21	PVC	0.01	2,815	191	403	594	21.1		
Kirkland_Main-1130	Kirkland_Manholes-2155	23.66	Kirkland_Manholes-2318	17.6	47.1	12.87	8	PVC	0.01	2,530	54	97	152	6		
Kirkland_Main-1131	Kirkland_Manholes-2318	17.6	Kirkland_Manholes-2317	17.2	364	0.11	21	PVC	0.01	3,053	182	390	572	18.7		
Kirkland_Main-1132	Kirkland_Manholes-2319	17.7	Kirkland_Manholes-2318	17.6	48.4	0.21	21	PVC	0.01	4,200	127	279	406	9.7		
Kirkland_Main-1136	Kirkland_Manholes-2874	209.8	Kirkland_Manholes-2873	208.01	164.9	1.09	8	PVC	0.01	735	0	4	4	0.6		
Kirkland_Main-1137	Kirkland_Manholes-2873	208.01	Kirkland_Manholes-2872	207.03	88.7	1.1	8	PVC	0.01	741	0	8	8	1.1		
Kirkland_Main-1138	Kirkland_Manholes-2872	207.03	Kirkland_Manholes-2871	205.15	113.5	1.66	8	PVC	0.01	907	0	16	16	1.8		
Kirkland_Main-1139	Kirkland_Manholes-2871	205.15	Kirkland_Manholes-2869	204.84	44.2	0.7	8	PVC	0.01	591	0	20	20	3.4		
Kirkland_Main-1140	Kirkland_Manholes-2869	204.84	Kirkland_Manholes-2870	201.21	123.4	2.94	18	PVC	0.01	10,510	657	2,112	2,769	26.3		
Kirkland_Main-1141	Kirkland_Manholes-2870	201.21	Kirkland_Manholes-1103	198.97	205	1.09	18	PVC	0.01	6,407	657	2,116	2,773	43.3		
Kirkland_Main-1142	Kirkland_Manholes-2875	310.11	Kirkland_Manholes-898	306.89	269.8	1.19	8	PVC	0.01	770	0	4	4	0.5		
Kirkland_Main-1143	Kirkland_Manholes-2475	210.58	Kirkland_Manholes-2477	189.6	360	5.83	8	PVC	0.01	1,702	2	4	6	0.4	SM14-Ex-EX241	
Kirkland_Main-1144	Kirkland_Manholes-2478	190.32	Kirkland_Manholes-2477	189.6	67.1	1.07	8	PVC	0.01	730	1	4	5	0.7	SM14-Ex-EX241	
Kirkland_Main-1145	Kirkland_Manholes-2477	189.6	Kirkland_Manholes-2479	186.26	224.2	1.49	8	PVC	0.01	861	4	12	16	1.9	SM14-Ex-EX241	
Kirkland_Main-1146	Kirkland_Manholes-2479	186.26	Kirkland_Manholes-2482	184.91	81	1.67	8	PVC	0.01	910	7	24	32	3.5		
Kirkland_Main-1147	Kirkland_Manholes-2480	187.23	Kirkland_Manholes-2479	186.26	143.4	0.68	8	PVC	0.01	580	3	8	11	1.9	SM14-Ex-EX241	
Kirkland_Main-1148	Kirkland_Manholes-2489	190.15	Kirkland_Manholes-2480	187.23	230.1	1.27	8	PVC	0.01	794	1	4	5	0.6	SM14-Ex-EX241	
Kirkland_Main-1149	Kirkland_Manholes-2481	184.88	Kirkland_Manholes-2490	173.27	348.4	3.33	8	PVC	0.01	1,287	2	4	7	0.5	SM14-Ex-EX242	
Kirkland_Main-1150	Kirkland_Manholes-2482	184.91	Kirkland_Manholes-2483	165.54	140.6	13.78	8	PVC	0.01	2,617	8	28	37	1.4		
Kirkland_Main-1152	Kirkland_Manholes-2483	165.54	Kirkland_Manholes-2488	154.5	273.8	4.03	8	PVC	0.01	1,416	10	33	42	3		
Kirkland_Main-1153	Kirkland_Manholes-2488	154.5	Kirkland_Manholes-2487	153.78	111.9	0.64	8	PVC	0.01	566	11	37	48	8.5		
Kirkland_Main-1154	Kirkland_Manholes-2490	173.27	Kirkland_Manholes-2485	153.26	284.1	7.04	8	PVC	0.01	1,871	27	77	105	5.6	SM14-Ex-EX242	
Kirkland_Main-1156	Kirkland_Manholes-2484	189.79	Kirkland_Manholes-2485	153.26	364.5	10.02	8	PVC	0.01	2,232	2	4	7	0.3	SM14-Ex-EX239	
Kirkland_Main-1157	Kirkland_Manholes-2487	153.78	Kirkland_Manholes-2486	152.49	105	1.23	8	PVC	0.01	782	11	41	52	6.7		
Kirkland_Main-1158	Kirkland_Manholes-2485	153.26	Kirkland_Manholes-2486	152.49	113.6	0.68	8	PVC	0.01	580	31	85	117	20.1	SM14-Ex-EX239	
Kirkland_Main-1159	Kirkland_Manholes-1429	514.5	Kirkland_Manholes-1427	513.21	125.2	1.03	8	PVC	0.01	715	4	16	20	2.8		
Kirkland_Main-1160	Kirkland_Manholes-1427	513.21	Kirkland_Manholes-1428	512.46	129.3	0.58	8	PVC	0.01	537	6	24	31	5.7		
Kirkland_Main-1161	Kirkland_Manholes-1428	512.46	Kirkland_Manholes-1434	511.6	190.6	0.45	8	PVC	0.01	474	7	28	35	7.5		
Kirkland_Main-1162	Kirkland_Manholes-1430	516.64	Kirkland_Manholes-1429	514.5	144.2	1.48	8	PVC	0.01	859	3	12	15	1.8		
Kirkland_Main-1164	Kirkland_Manholes-2175	133.14	Kirkland_Manholes-2174	132.67	117.8	0.4	8	PVC	0.01	446	1	8	10	2.1		
Kirkland_Main-1165	Kirkland_Manholes-2174	132.67	Kirkland_Manholes-2173	131.99	11.1	6.13	8	PVC	0.01	1,745	2	16	19	1.1		
Kirkland_Main-1166	Kirkland_Manholes-2173	131.99	Kirkland_Manholes-2172	130.6	348.2	0.4	8	PVC	0.01	446	25	25	50	11.3	SM14-Ex-EX192	Drop Connection
Kirkland_Main-1167	Kirkland_Manholes-2172	107.91	Kirkland_Manholes-2163	75.42	383.7	8.47	8	PVC	0.01	2,052	27	33	60	2.9	SM14-Ex-EX192	
Kirkland_Main-1168	Kirkland_Manholes-2163	75.42	Kirkland_Manholes-2141	73.53	47.4	3.99	8	PVC	0.01	1,408	28	41	69	4.9		
Kirkland_Main-1169	Kirkland_Manholes-2183	146.45	Kirkland_Manholes-2182	136.23	145.7	7.02	8	PVC	0.01	1,868	0	8	9	0.5		
Kirkland_Main-1170	Kirkland_Manholes-2182	136.23	Kirkland_Manholes-2181	133.52	88.2	3.07	8	PVC	0.01	1,236	0	16	17	1.4		
Kirkland_Main-1171	Kirkland_Manholes-2181	133.52	Kirkland_Manholes-2180	125.44	163.5	4.94	8	PVC	0.01	1,567	1	25	26	1.7		
Kirkland_Main-1172	Kirkland_Manholes-2180	125.44	Kirkland_Manholes-2179	120.67	330.4	1.44	8	PVC	0.01	847	4	33	37	4.3		
Kirkland_Main-1173	Kirkland_Manholes-2179	120.67	Kirkland_Manholes-2178	102.28	199.5	9.22	8	PVC	0.01	2,140	6	41	47	2.2		
Kirkland_Main-1174	Kirkland_Manholes-2178	102.28	Kirkland_Manholes-2177	75.93	214.6	12.28	8	PVC	0.01	2,471	7	49	56	2.3		
Kirkland_Main-1175	Kirkland_Manholes-2177	75.93	Kirkland_Manholes-2176	70.83	149.4	3.41	8	PVC	0.01	1,303	7	58	64	5		
Kirkland_Main-1176	Kirkland_Manholes-2176	70.83	Kirkland_Manholes-2142	68.99	36.2	5.08	8	PVC	0.01	1,589	7	66	73	4.6		
Kirkland_Main-1177	Kirkland_Manholes-2366	292.68	Kirkland_Manholes-2365	289.93	42.5	6.47	8	PVC	0.01	1,794	27	81	108	6	SM14-Ex-EX260	
Kirkland_Main-1178	Kirkland_Manholes-2368	290.87	Kirkland_Manholes-2365	289.93	48.6	1.94	8	PVC	0.01	981	1	4	6	0.6		
Kirkland_Main-1179	Kirkland_Manholes-2372	304.48	Kirkland_Manholes-2371	291.2	253.9	5.23	8	PVC	0.01	1,613	16	45	60	3.7	SM14-Ex-EX257	
Kirkland_Main-1180	Kirkland_Manholes-2378	312.05	Kirkland_Manholes-2372	304.48	224.1	3.38	8	PVC	0.01	1,296	11	24	36	2.8	SM14-Ex-EX257	
Kirkland_Main-1181	Kirkland_Manholes-2373	306.85	Kirkland_Manholes-2372	304.48	403.1	0.59	8	PVC	0.01	541	3	8	11	2	SM14-Ex-EX258	
Kirkland_Main-1182	Kirkland_Manholes-2374	307.1	Kirkland_Manholes-2373	306.85	109.8	0.23	8	PVC	0.01	336	1	4	5	1.6	SM14-Ex-EX258	
Kirkland_Main-1183	Kirkland_Manholes-2376	359.31	Kirkland_Manholes-2375	323.76	368.2	9.66	8	PVC	0.01	2,191	5	4	9	0.4	SM14-Ex-EX259	
Kirkland_Main-1184	Kirkland_Manholes-2375	323.76	Kirkland_Manholes-2377	320.51	173.5	1.87	8	PVC	0.01	965	7	8	15	1.5	SM14-Ex-EX259	
Kirkland_Main-1185	Kirkland_Manholes-2377	320.51	Kirkland_Manholes-2378	312.05	352.3	2.4	8	PVC	0.01	1,093	9	12	21	1.9	SM14-Ex-EX259	
Kirkland_Main-1186	Kirkland_Manholes-2379	312.61	Kirkland_Manholes-2378	312.05	23.8	2.35	8	PVC	0.01	1,081	2	8	10	0.9	SM14-Ex-EX257	

2021 (6-year) with Proposed Improvements - Peak Hour Flow - Pipe Capacity Table

Label	Upstream Node	Upstream Invert Elevation (ft)	Downstream Node	Downstream Invert Elevation (ft)	Length (ft)	Slope (%)	Diameter (in)	Material	Manning's n	Design Capacity (gpm)	Domestic Flow (gpm)	I/I Flow (gpm)	Total Flow (gpm)	Percent Full (%)	CIP No.	Notes
Kirkland_Main-1187	Kirkland_Manholes-2380	290.72	Kirkland_Manholes-2430	273.69	397.1	4.29	8	PVC	0.01	1,460	3	8	11	0.7	SM14-Ex-EX286	
Kirkland_Main-1188	Kirkland_Manholes-2381	293.12	Kirkland_Manholes-2380	290.72	144.3	1.66	8	PVC	0.01	909	1	4	5	0.6	SM14-Ex-EX286	
Kirkland_Main-1189	Kirkland_Manholes-2385	343.75	Kirkland_Manholes-2383	328.5	173.4	8.79	8	PVC	0.01	2,091	9	24	34	1.6	SM14-Ex-EX260	
Kirkland_Main-1190	Kirkland_Manholes-2384	330.79	Kirkland_Manholes-2383	328.5	64.4	3.56	8	PVC	0.01	1,330	11	33	44	3.3	SM14-Ex-EX287	
Kirkland_Main-1191	Kirkland_Manholes-2395	331.59	Kirkland_Manholes-2384	330.79	136.8	0.58	8	PVC	0.01	539	10	28	39	7.2	SM14-Ex-EX287	
Kirkland_Main-1192	Kirkland_Manholes-2386	373.02	Kirkland_Manholes-2385	343.75	310.7	9.42	8	PVC	0.01	2,164	8	20	28	1.3	SM14-Ex-EX260	
Kirkland_Main-1193	Kirkland_Manholes-2387	380.46	Kirkland_Manholes-2386	373.02	399.9	1.86	8	PVC	0.01	962	6	16	23	2.3	SM14-Ex-EX260	
Kirkland_Main-1194	Kirkland_Manholes-2388	388.18	Kirkland_Manholes-2387	380.46	279.2	2.76	8	PVC	0.01	1,172	4	12	16	1.4	SM14-Ex-EX260	
Kirkland_Main-1195	Kirkland_Manholes-2533	389.33	Kirkland_Manholes-2388	388.18	396.1	0.29	8	PVC	0.01	380	2	8	10	2.7	SM14-Ex-EX260	
Kirkland_Main-1196	Kirkland_Manholes-2389	365.8	Kirkland_Manholes-2390	359.58	183.8	3.38	8	PVC	0.01	1,297	3	4	7	0.5	SM14-Ex-EX287	
Kirkland_Main-1197	Kirkland_Manholes-2390	359.58	Kirkland_Manholes-2391	347.6	291	4.12	8	PVC	0.01	1,430	5	8	13	0.9	SM14-Ex-EX287	
Kirkland_Main-1198	Kirkland_Manholes-2391	347.6	Kirkland_Manholes-2392	345.7	123.7	1.54	8	PVC	0.01	874	7	12	19	2.2	SM14-Ex-EX287	
Kirkland_Main-1199	Kirkland_Manholes-2392	345.7	Kirkland_Manholes-2393	339.78	135.6	4.36	8	PVC	0.01	1,473	8	16	24	1.6	SM14-Ex-EX287	
Kirkland_Main-1200	Kirkland_Manholes-2411	259.15	Kirkland_Manholes-2413	251.1	165.8	4.86	8	PVC	0.01	1,554	30	81	111	7.2		
Kirkland_Main-1201	Kirkland_Manholes-2419	203.52	Kirkland_Manholes-2303	195.57	329.3	2.41	12	PVC	0.01	3,230	335	594	929	28.8	SM2	
Kirkland_Main-1202	Kirkland_Manholes-2418	218.73	Kirkland_Manholes-2419	203.52	222.4	6.84	12	PVC	0.01	5,436	325	590	915	16.8	SM2	
Kirkland_Main-1203	Kirkland_Manholes-2417	230.48	Kirkland_Manholes-2418	218.73	175.2	6.71	12	PVC	0.01	5,384	279	431	710	13.2	SM2	
Kirkland_Main-1204	Kirkland_Manholes-2416	242.81	Kirkland_Manholes-2417	230.48	262.7	4.69	12	PVC	0.01	4,503	276	427	703	15.6	SM2	
Kirkland_Main-1205	Kirkland_Manholes-2420	230.11	Kirkland_Manholes-2418	218.73	227.2	5.01	8	PVC	0.01	1,578	46	155	201	12.7	SM14-Ex-EX251	
Kirkland_Main-1206	Kirkland_Manholes-2415	247.52	Kirkland_Manholes-2416	242.81	265.9	1.77	12	PVC	0.01	2,766	274	423	697	25.2	SM2	
Kirkland_Main-1207	Kirkland_Manholes-2720	32.22	Kirkland_Manholes-2719	31.99	57.5	0.4	8	PVC	0.01	446	83	6	90	20.1		
Kirkland_Main-1208	Kirkland_Manholes-2414	248.96	Kirkland_Manholes-2415	247.52	131.3	1.1	12	PVC	0.01	2,177	272	419	692	31.8	SM2	
Kirkland_Main-1209	Kirkland_Manholes-2413	251.1	Kirkland_Manholes-2414	248.96	118.1	1.81	12	PVC	0.01	2,798	272	415	687	24.6	SM2	
Kirkland_Main-1210	Kirkland_Manholes-2421	253.02	Kirkland_Manholes-2413	251.1	118.9	1.61	12	PVC	0.01	2,641	242	330	571	21.6	SM2	
Kirkland_Main-1211	Kirkland_Manholes-2422	254.09	Kirkland_Manholes-2421	253.02	92.9	1.15	12	PVC	0.01	2,230	238	321	559	25.1	SM2	
Kirkland_Main-1212	Kirkland_Manholes-2424	257.66	Kirkland_Manholes-2422	254.09	323.2	1.1	12	PVC	0.01	2,185	237	317	554	25.4	SM2	
Kirkland_Main-1213	Kirkland_Manholes-2879	68.04	Kirkland_Manholes-2492	55.46	56.8	22.14	8	PVC	0.01	3,317	28	43	70	2.1		
Kirkland_Main-1214	Kirkland_Manholes-2091	57.76	Kirkland_Manholes-2090	57.52	58.9	0.4	8	PVC	0.01	446	3	12	15	3.3	SM14-Ex-EX279	Drop Connection
Kirkland_Main-1215	Kirkland_Manholes-2094	57.58	Kirkland_Manholes-2090	57.44	314.4	0.04	15	PVC	0.01	795	91	238	329	41.4	SM14-Ex-EX222	
Kirkland_Main-1216	Kirkland_Manholes-2092	79.95	Kirkland_Manholes-2091	79.51	110.7	0.4	8	PVC	0.01	446	2	6	8	1.9	SM14-Ex-EX279	Drop Connection
Kirkland_Main-1218	Kirkland_Manholes-2095	60.47	Kirkland_Manholes-2094	57.58	55.7	5.18	8	PVC	0.01	1,605	2	12	15	0.9	SM14-Ex-EX277	
Kirkland_Main-1219	Kirkland_Manholes-2096	71.29	Kirkland_Manholes-2095	60.47	119	9.09	8	PVC	0.01	2,126	2	6	8	0.4	SM14-Ex-EX277	
Kirkland_Main-1220	Kirkland_Manholes-2099	57.72	Kirkland_Manholes-2094	57.58	259	0.05	12	PVC	0.01	483	88	220	308	63.7	SM14-Ex-EX222	
Kirkland_Main-1223	Kirkland_Manholes-2614	304.78	Kirkland_Manholes-2615	302.07	237.1	1.14	8	PVC	0.01	754	42	106	148	19.7	SM14-Ex-EX299	
Kirkland_Main-1224	Kirkland_Manholes-2615	302.07	Kirkland_Manholes-2618	301.8	67.7	0.4	8	PVC	0.01	446	42	110	152	34.2	SM14-Ex-EX299	Drop Connection
Kirkland_Main-1225	Kirkland_Manholes-2618	278.4	Kirkland_Manholes-2617	276.43	274.1	0.72	8	PVC	0.01	598	48	122	170	28.4	SM2	
Kirkland_Main-1226	Kirkland_Manholes-2617	276.43	Kirkland_Manholes-2616	275.44	246.8	0.4	8	PVC	0.01	446	66	126	192	43.1	SM2	Drop Connection
Kirkland_Main-1227	Kirkland_Manholes-2616	274.02	Kirkland_Manholes-2619	272.54	173.9	0.85	8	PVC	0.01	650	135	155	290	44.5	SM2	
Kirkland_Main-1228	Kirkland_Manholes-2619	272.54	Kirkland_Manholes-2428	270.37	122.7	1.77	8	PVC	0.01	937	135	159	294	31.3	SM2	
Kirkland_Main-1229	Kirkland_Manholes-407	266.31	Kirkland_Manholes-409	264.84	123.1	1.19	8	PVC	0.01	771	2	8	10	1.3		
Kirkland_Main-1230	Kirkland_Manholes-409	264.84	Kirkland_Manholes-419	263.82	78.4	1.3	8	PVC	0.01	804	4	16	20	2.5		
Kirkland_Main-1231	Kirkland_Manholes-411	265.96	Kirkland_Manholes-412	253.7	218.8	5.6	8	PVC	0.01	1,669	2	4	6	0.3		
Kirkland_Main-1232	Kirkland_Manholes-412	253.7	Kirkland_Manholes-413	252.76	178.3	0.53	8	PVC	0.01	512	2	8	10	2		
Kirkland_Main-1233	Kirkland_Manholes-413	252.76	Kirkland_Manholes-414	251.5	46.6	2.7	8	PVC	0.01	1,159	3	12	15	1.3		
Kirkland_Main-1234	Kirkland_Manholes-414	251.5	Kirkland_Manholes-415	250.52	65.4	1.5	8	PVC	0.01	863	3	16	19	2.2		
Kirkland_Main-1235	Kirkland_Manholes-415	250.52	Kirkland_Manholes-416	248.58	58.4	3.32	8	PVC	0.01	1,285	4	20	24	1.9		
Kirkland_Main-1236	Kirkland_Manholes-416	248.58	Kirkland_Manholes-417	237.12	157.3	7.28	8	PVC	0.01	1,903	5	24	29	1.5		
Kirkland_Main-1237	Kirkland_Manholes-417	237.12	Kirkland_Manholes-2767	236.02	47.6	2.31	8	PVC	0.01	1,071	5	28	34	3.2		
Kirkland_Main-1238	Kirkland_Manholes-2767	236.02	Kirkland_Manholes-418	235.93	86.7	0.1	8	PVC	0.01	227	5	33	38	16.7		
Kirkland_Main-1239	Kirkland_Manholes-408	267.9	Kirkland_Manholes-407	266.31	113.3	1.4	8	PVC	0.01	835	1	4	5	0.6		
Kirkland_Main-1240	Kirkland_Manholes-419	263.82	Kirkland_Manholes-625	258	200	2.91	8	PVC	0.01	1,203	5	20	25	2.1		
Kirkland_Main-1241	Kirkland_Manholes-420	281.46	Kirkland_Manholes-1071	277.81	358.8	1.02	8	PVC	0.01	711	8	37	45	6.3		
Kirkland_Main-1242	Kirkland_Manholes-418	235.93	Kirkland_Manholes-421	235.77	9.8	1.63	8	PVC	0.01	901	5	37	42	4.7		
Kirkland_Main-1243	Kirkland_Manholes-422	235.64	Kirkland_Manholes-341	235.59	30.3	0.17	8	PVC	0.01	287	6	45	51	17.7	SM14-Ex-EX49	
Kirkland_Main-1244	Kirkland_Manholes-421	235.77	Kirkland_Manholes-422	235.64	135.2	0.1	8	PVC	0.01	219	6	41	47	21.4	SM14-Ex-EX49	
Kirkland_Main-1245	Kirkland_Manholes-423	284.5	Kirkland_Manholes-420	281.46	237.1	1.28	8	PVC	0.01	798	1	4	5	0.6		
Kirkland_Main-1246	Kirkland_Manholes-424	292.81	Kirkland_Manholes-425	290.3	45.2	5.56	8	PVC	0.01	1,662	6	24	30	1.8		
Kirkland_Main-1247	Kirkland_Manholes-1846	15.1	Kirkland_Manholes-1845	14.95	208.8	0.07	12	PVC	0.01	557	6	32	39	6.9	SM10	
Kirkland_Main-1248	Kirkland_Manholes-1845	14.95	Kirkland_Manholes-1844	14.08	225.8	0.39	12	PVC	0.01	1,290	7	39	46	3.5	SM10	
Kirkland_Main-1249	Kirkland_Manholes-1844	14.08	Kirkland_Manholes-1843	13.9	253.8	0.07	12	PVC	0.01	554	9	45	54	9.8	SM10	
Kirkland_Main-1250	Kirkland_Manholes-1843	13.9	Kirkland_Manholes-1842	13.84	237.6	0.03	12	PVC	0.01	330	9	52	61	18.5	SM10	
Kirkland_Main-1251	Kirkland_Manholes-1842	13.84	Kirkland_Manholes-1841	13.3	228.3	0.24	12	PVC	0.01	1,011	10	58	69	6.8	SM10	

2021 (6-year) with Proposed Improvements - Peak Hour Flow - Pipe Capacity Table

Label	Upstream Node	Upstream Invert Elevation (ft)	Downstream Node	Downstream Invert Elevation (ft)	Length (ft)	Slope (%)	Diameter (in)	Material	Manning's n	Design Capacity (gpm)	Domestic Flow (gpm)	I/I Flow (gpm)	Total Flow (gpm)	Percent Full (%)	CIP No.	Notes
Kirkland_Main-1252	Kirkland_Manholes-1840	12.98	Kirkland_Manholes-1839	12.1	208.1	0.42	12	PVC	0.01	1,352	16	71	88	6.5	SM10	
Kirkland_Main-1253	Kirkland_Manholes-1839	12.1	Kirkland_Manholes-1838	12	159.4	0.06	12	PVC	0.01	521	16	78	94	18.1		
Kirkland_Main-1254	Kirkland_Manholes-1838	12	Kirkland_Manholes-1834	11.35	218.3	0.3	12	PVC	0.01	1,134	18	84	102	9		
Kirkland_Main-1255	Kirkland_Manholes-1841	13.3	Kirkland_Manholes-1840	12.98	311	0.1	12	PVC	0.01	667	11	65	76	11.4	SM10	
Kirkland_Main-1256	Kirkland_Manholes-1854	359.04	Kirkland_Manholes-1855	357.41	200.3	0.81	8	PVC	0.01	636	0	4	4	0.6		
Kirkland_Main-1257	Kirkland_Manholes-1855	357.41	Kirkland_Manholes-1856	346.8	232	4.57	8	PVC	0.01	1,508	0	8	8	0.5		
Kirkland_Main-1258	Kirkland_Manholes-1856	346.8	Kirkland_Manholes-1857	344.14	121.8	2.18	8	PVC	0.01	1,042	7	12	19	1.8		
Kirkland_Main-1259	Kirkland_Manholes-1857	344.14	Kirkland_Manholes-1858	335.71	162.8	5.18	8	PVC	0.01	1,605	7	16	23	1.5		
Kirkland_Main-1260	Kirkland_Manholes-1858	335.71	Kirkland_Manholes-1859	326.96	255.9	3.42	8	PVC	0.01	1,304	71	118	189	14.5		
Kirkland_Main-1261	Kirkland_Manholes-1963	340.77	Kirkland_Manholes-1858	335.71	100.1	5.06	8	PVC	0.01	1,585	61	98	159	10		
Kirkland_Main-1262	Kirkland_Manholes-1859	326.96	Kirkland_Manholes-1860	317.11	345	2.85	8	PVC	0.01	1,191	71	122	193	16.2		
Kirkland_Main-1263	Kirkland_Manholes-1860	317.11	Kirkland_Manholes-1861	303.96	398.6	3.3	8	PVC	0.01	1,281	72	126	198	15.4		
Kirkland_Main-1264	Kirkland_Manholes-1861	303.96	Kirkland_Manholes-1862	294.2	372.7	2.62	8	PVC	0.01	1,141	72	130	202	17.7		Drop Connection
Kirkland_Main-1265	Kirkland_Manholes-2394	354.21	Kirkland_Manholes-2393	339.78	142.1	10.15	8	PVC	0.01	2,247	2	4	6	0.3	SM14-Ex-EX287	
Kirkland_Main-1266	Kirkland_Manholes-2393	339.78	Kirkland_Manholes-2395	331.59	110.8	7.39	8	PVC	0.01	1,917	10	24	34	1.8	SM14-Ex-EX287	
Kirkland_Main-1267	Kirkland_Manholes-2405	418	Kirkland_Manholes-2397	417.95	35.5	0.14	8	PVC	0.01	265	6	28	35	13.2		
Kirkland_Main-1268	Kirkland_Manholes-2397	417.95	Kirkland_Manholes-2398	416.84	162.8	0.68	8	PVC	0.01	582	7	33	40	6.8	SM14-Ex-EX261	
Kirkland_Main-1269	Kirkland_Manholes-2404	419.23	Kirkland_Manholes-2405	418	199.9	0.62	8	PVC	0.01	553	5	24	29	5.3		
Kirkland_Main-1270	Kirkland_Manholes-2399	419.47	Kirkland_Manholes-2404	419.23	32.8	0.73	8	PVC	0.01	603	1	8	9	1.5		
Kirkland_Main-1271	Kirkland_Manholes-2403	420.2	Kirkland_Manholes-2404	419.23	274.8	0.35	8	PVC	0.01	419	3	12	16	3.7		
Kirkland_Main-1272	Kirkland_Manholes-2400	420.6	Kirkland_Manholes-2399	419.47	159	0.71	8	PVC	0.01	594	1	4	5	0.8		
Kirkland_Main-1273	Kirkland_Manholes-2402	421.38	Kirkland_Manholes-2403	420.2	252.3	0.47	8	PVC	0.01	482	2	8	11	2.2		
Kirkland_Main-1274	Kirkland_Manholes-2401	422.6	Kirkland_Manholes-2402	421.38	262.8	0.46	8	PVC	0.01	480	2	4	6	1.2		
Kirkland_Main-1276	Kirkland_Manholes-2398	416.84	Kirkland_Manholes-2406	412.88	316.7	1.25	8	PVC	0.01	788	9	37	45	5.8	SM14-Ex-EX261	
Kirkland_Main-1277	Kirkland_Manholes-2406	412.88	Kirkland_Manholes-2396	406.38	222.1	2.93	8	PVC	0.01	1,206	11	41	52	4.3	SM14-Ex-EX261	
Kirkland_Main-1278	Kirkland_Manholes-2396	406.38	Kirkland_Manholes-2407	403.31	84.2	3.65	8	PVC	0.01	1,346	12	45	57	4.2	SM14-Ex-EX261	
Kirkland_Main-1279	Kirkland_Manholes-2408	405.44	Kirkland_Manholes-2409	401.93	26.6	13.2	8	PVC	0.01	2,561	1	8	9	0.3		
Kirkland_Main-1281	Kirkland_Manholes-2409	401.93	Kirkland_Manholes-2267	393.07	194.4	4.56	8	PVC	0.01	1,505	1	12	13	0.9		
Kirkland_Main-1282	Kirkland_Manholes-2412	260.78	Kirkland_Manholes-2411	259.15	122.6	1.33	8	PVC	0.01	813	7	12	19	2.4		
Kirkland_Main-1283	Kirkland_Manholes-282	50.07	Kirkland_Manholes-281	36.84	240.3	5.51	8	PVC	0.01	1,654	2	10	11	0.7	SM10	
Kirkland_Main-1284	Kirkland_Manholes-284	50.6	Kirkland_Manholes-282	50.07	132.8	0.4	8	PVC	0.01	446	0	3	3	0.7		
Kirkland_Main-1285	Kirkland_Manholes-283	64.31	Kirkland_Manholes-282	50.07	115.4	12.34	8	PVC	0.01	2,477	2	3	5	0.2	SM10	
Kirkland_Main-1286	Kirkland_Manholes-273	69.52	Kirkland_Manholes-247	65.14	92.5	4.74	8	PVC	0.01	1,534	56	140	197	12.8	SM10	
Kirkland_Main-1290	Kirkland_Manholes-274	93.7	Kirkland_Manholes-271	91.78	250.2	0.77	8	PVC	0.01	618	40	97	138	22.3	SM10	
Kirkland_Main-1292	Kirkland_Manholes-277	72.24	Kirkland_Manholes-278	56.62	141.8	11.02	8	PVC	0.01	2,340	3	3	6	0.3	SM10	
Kirkland_Main-1293	Kirkland_Manholes-278	56.62	Kirkland_Manholes-280	27.37	245.1	11.93	8	PVC	0.01	2,436	35	13	48	2	SM10	
Kirkland_Main-1294	Kirkland_Manholes-276	92.16	Kirkland_Manholes-299	66.63	263.6	9.68	8	PVC	0.01	2,194	3	6	9	0.4	SM10	
Kirkland_Main-1295	Kirkland_Manholes-267	95.34	Kirkland_Manholes-275	94.08	184.4	0.68	8	PVC	0.01	583	38	88	127	21.7	SM10	
Kirkland_Main-1296	Kirkland_Manholes-275	94.08	Kirkland_Manholes-274	93.7	61.9	0.61	8	PVC	0.01	553	39	93	132	23.9	SM10	
Kirkland_Main-1297	Kirkland_Manholes-270	94.47	Kirkland_Manholes-271	91.78	344.2	0.78	8	PVC	0.01	623	11	30	41	6.6	SM10	
Kirkland_Main-1298	Kirkland_Manholes-269	103.08	Kirkland_Manholes-270	94.47	190.8	4.51	8	PVC	0.01	1,498	7	26	33	2.2	SM10	
Kirkland_Main-1299	Kirkland_Manholes-268	108.82	Kirkland_Manholes-269	103.08	133.1	4.31	8	PVC	0.01	1,464	5	22	27	1.8	SM10	
Kirkland_Main-1300	Kirkland_Manholes-2521	363.83	Kirkland_Manholes-2525	348.63	167.1	9.09	8	PVC	0.01	2,126	3	6	8	0.4		
Kirkland_Main-1301	Kirkland_Manholes-2519	384.75	Kirkland_Manholes-2522	362.4	159.7	13.99	8	PVC	0.01	2,637	2	3	5	0.2		
Kirkland_Main-1302	Kirkland_Manholes-2522	362.4	Kirkland_Manholes-2523	357.31	64.3	7.92	8	PVC	0.01	1,984	2	6	8	0.4		
Kirkland_Main-1303	Kirkland_Manholes-2523	357.31	Kirkland_Manholes-2524	346.56	113.2	9.5	8	PVC	0.01	2,173	3	9	12	0.6		
Kirkland_Main-1304	Kirkland_Manholes-2524	346.56	Kirkland_Manholes-2527	340.94	187	3.01	8	PVC	0.01	1,222	41	38	79	6.4		
Kirkland_Main-1305	Kirkland_Manholes-2526	336.85	Kirkland_Manholes-2776	334.45	375.1	0.64	8	PVC	0.01	564	50	100	150	26.6		
Kirkland_Main-1306	Kirkland_Manholes-2527	340.94	Kirkland_Manholes-2526	336.85	509.8	0.8	8	PVC	0.01	631	50	97	147	23.3		
Kirkland_Main-1307	Kirkland_Manholes-2525	348.63	Kirkland_Manholes-2527	340.94	406	1.89	8	PVC	0.01	970	9	56	65	6.7		
Kirkland_Main-1308	Kirkland_Manholes-2528	359.11	Kirkland_Manholes-2525	348.63	235.4	4.45	8	PVC	0.01	1,488	6	47	53	3.6		
Kirkland_Main-1309	Kirkland_Manholes-2529	365.07	Kirkland_Manholes-2528	362.98	40.4	5.17	8	PVC	0.01	1,604	5	44	49	3.1		Drop Connection
Kirkland_Main-1310	Kirkland_Manholes-2531	381.45	Kirkland_Manholes-2529	365.07	303.2	5.4	8	PVC	0.01	1,639	5	41	47	2.8		
Kirkland_Main-1311	Kirkland_Manholes-2530	382.12	Kirkland_Manholes-2531	381.45	45.8	1.46	8	PVC	0.01	853	5	38	44	5.1		
Kirkland_Main-1312	Kirkland_Manholes-2532	395.91	Kirkland_Manholes-2530	382.12	311	4.43	8	PVC	0.01	1,485	4	35	39	2.6		
Kirkland_Main-1313	Kirkland_Manholes-2534	391.7	Kirkland_Manholes-2533	389.33	214.8	1.1	8	PVC	0.01	741	1	4	5	0.7	SM14-Ex-EX260	
Kirkland_Main-1315	Kirkland_Manholes-2535	407.5	Kirkland_Manholes-2536	406.16	143.7	0.93	8	PVC	0.01	681	14	4	18	2.7		
Kirkland_Main-1316	Kirkland_Manholes-2536	406.16	Kirkland_Manholes-2537	404.02	173.1	1.24	8	PVC	0.01	784	19	8	28	3.5		
Kirkland_Main-1317	Kirkland_Manholes-2537	404.02	Kirkland_Manholes-2538	403.64	31.1	1.22	8	PVC	0.01	780	19	12	32	4.1		
Kirkland_Main-1318	Kirkland_Manholes-2541	412.62	Kirkland_Manholes-2538	403.64	249.5	3.6	8	PVC	0.01	1,338	5	12	17	1.3	SM14-Ex-EX299	
Kirkland_Main-1320	Kirkland_Manholes-2538	403.64	Kirkland_Manholes-2542	402.84	199.8	0.4	8	PVC	0.01	446	25	28	54	12.1	SM14-Ex-EX299	
Kirkland_Main-1321	Kirkland_Manholes-2539	420.17	Kirkland_Manholes-2540	419.4	116.4	0.66	8	PVC	0.01	574	2	4	6	1.1	SM14-Ex-EX299	

2021 (6-year) with Proposed Improvements - Peak Hour Flow - Pipe Capacity Table

Label	Upstream Node	Upstream Invert Elevation (ft)	Downstream Node	Downstream Invert Elevation (ft)	Length (ft)	Slope (%)	Diameter (in)	Material	Manning's n	Design Capacity (gpm)	Domestic Flow (gpm)	I/I Flow (gpm)	Total Flow (gpm)	Percent Full (%)	CIP No.	Notes
Kirkland_Main-1322	Kirkland_Manholes-2540	419.4	Kirkland_Manholes-2541	412.62	255.5	2.65	8	PVC	0.01	1,149	4	8	12	1	SM14-Ex-EX299	
Kirkland_Main-1324	Kirkland_Manholes-2542	402.84	Kirkland_Manholes-2547	388.67	366.3	3.87	8	PVC	0.01	1,387	27	33	59	4.3	SM14-Ex-EX299	
Kirkland_Main-1325	Kirkland_Manholes-2547	388.67	Kirkland_Manholes-2549	373.53	148.8	10.17	8	PVC	0.01	2,249	28	37	64	2.9	SM14-Ex-EX299	
Kirkland_Main-1327	Kirkland_Manholes-2543	398.38	Kirkland_Manholes-2545	394.25	263.6	1.57	8	PVC	0.01	883	3	8	11	1.3		
Kirkland_Main-1328	Kirkland_Manholes-2544	407.5	Kirkland_Manholes-2543	398.38	295.7	3.08	8	PVC	0.01	1,238	2	4	6	0.5	SM14-Ex-EX308	
Kirkland_Main-1329	Kirkland_Manholes-2546	394.6	Kirkland_Manholes-2545	394.25	207.1	0.17	8	PVC	0.01	290	0	4	4	1.5		
Kirkland_Main-1330	Kirkland_Manholes-2545	394.25	Kirkland_Manholes-2548	359.75	323.6	10.66	8	PVC	0.01	2,302	7	16	24	1		
Kirkland_Main-1331	Kirkland_Manholes-2549	373.53	Kirkland_Manholes-2550	363.01	106.8	9.85	8	PVC	0.01	2,213	28	41	69	3.1	SM14-Ex-EX299	
Kirkland_Main-1332	Kirkland_Manholes-2550	363.01	Kirkland_Manholes-2551	350.96	184.1	6.54	8	PVC	0.01	1,804	28	45	73	4.1	SM14-Ex-EX299	
Kirkland_Main-1333	Kirkland_Manholes-2551	350.96	Kirkland_Manholes-2552	332.83	142.8	12.69	8	PVC	0.01	2,512	41	85	127	5	SM14-Ex-EX299	
Kirkland_Main-1334	Kirkland_Manholes-2552	332.83	Kirkland_Manholes-2559	326.46	239.1	2.66	8	PVC	0.01	1,151	42	98	140	12.2	SM14-Ex-EX299	
Kirkland_Main-1335	Kirkland_Manholes-2555	336.08	Kirkland_Manholes-2552	332.83	311.9	1.04	8	PVC	0.01	720	1	8	9	1.3	SM14-Ex-EX322	
Kirkland_Main-1336	Kirkland_Manholes-2553	338.58	Kirkland_Manholes-2554	334.68	146	2.67	8	PVC	0.01	1,152	1	4	5	0.4	SM14-Ex-EX304	
Kirkland_Main-1337	Kirkland_Manholes-2892	130.3	Kirkland_Manholes-7	127.07	138.9	2.32	8	PVC	0.01	1,075	1	1	3	0.3		
Kirkland_Main-1338	Kirkland_Manholes-2554	334.68	Kirkland_Manholes-2558	329.23	295.9	1.84	8	PVC	0.01	957	7	8	15	1.5	SM14-Ex-EX304	
Kirkland_Main-1339	Kirkland_Manholes-2556	339.44	Kirkland_Manholes-2555	336.08	338.5	0.99	8	PVC	0.01	702	1	4	5	0.7	SM14-Ex-EX322	
Kirkland_Main-1340	Kirkland_Manholes-2557	338.97	Kirkland_Manholes-2564	326.24	273.9	4.65	8	PVC	0.01	1,520	0	4	4	0.3	SM14-Ex-EX303	
Kirkland_Main-1341	Kirkland_Manholes-2558	329.23	Kirkland_Manholes-2562	315.88	275	4.86	8	PVC	0.01	1,554	7	12	19	1.3	SM14-Ex-EX304	
Kirkland_Main-1342	Kirkland_Manholes-2559	326.46	Kirkland_Manholes-2614	304.78	296.2	7.32	8	PVC	0.01	1,907	42	102	144	7.6	SM14-Ex-EX299	
Kirkland_Main-1343	Kirkland_Manholes-2561	358.82	Kirkland_Manholes-2551	350.96	208.8	3.76	8	PVC	0.01	1,368	13	37	49	3.6		
Kirkland_Main-1344	Kirkland_Manholes-2560	366.92	Kirkland_Manholes-2561	358.82	174.3	4.65	8	PVC	0.01	1,520	2	4	6	0.4		
Kirkland_Main-1345	Kirkland_Manholes-2562	315.88	Kirkland_Manholes-2563	304.66	203.7	5.51	8	PVC	0.01	1,655	8	16	24	1.5	SM14-Ex-EX304	
Kirkland_Main-1346	Kirkland_Manholes-2563	304.66	Kirkland_Manholes-2603	296.02	227.1	3.81	8	PVC	0.01	1,375	10	20	30	2.2	SM14-Ex-EX304	
Kirkland_Main-1347	Kirkland_Manholes-2564	326.24	Kirkland_Manholes-2565	315.02	180.1	6.23	8	PVC	0.01	1,760	1	8	10	0.5	SM14-Ex-EX303	
Kirkland_Main-1349	Kirkland_Manholes-2565	315.02	Kirkland_Manholes-2590	303.32	215.8	5.42	8	PVC	0.01	1,642	8	41	49	3	SM14-Ex-EX303	
Kirkland_Main-1350	Kirkland_Manholes-2567	316.05	Kirkland_Manholes-2565	315.02	200.2	0.51	8	PVC	0.01	506	6	28	34	6.8	SM14-Ex-EX307	
Kirkland_Main-1353	Kirkland_Manholes-2456	21.67	Kirkland_Manholes-2458	21.12	286.3	0.19	12	PVC	0.01	911	62	110	173	18.9		
Kirkland_Main-1354	Kirkland_Manholes-2104	41.29	Kirkland_Manholes-2457	40.34	237.1	0.4	8	PVC	0.01	446	7	13	20	4.5	SM14-Ex-EX231	Drop Connection
Kirkland_Main-1355	Kirkland_Manholes-2459	25.23	Kirkland_Manholes-2458	21.12	57.9	7.1	8	PVC	0.01	1,879	0	13	13	0.7		
Kirkland_Main-1356	Kirkland_Manholes-2458	21.12	Kirkland_Manholes-2460	20.42	280.8	0.25	12	PVC	0.01	1,038	74	130	204	19.6		
Kirkland_Main-1357	Kirkland_Manholes-2105	41.32	Kirkland_Manholes-2459	40.36	240.6	0.4	8	PVC	0.01	446	0	6	7	1.5	SM14-Ex-EX230	Drop Connection
Kirkland_Main-1358	Kirkland_Manholes-2460	20.42	Kirkland_Manholes-2463	19.08	286.9	0.47	12	PVC	0.01	1,421	92	162	255	17.9		
Kirkland_Main-1359	Kirkland_Manholes-2461	23.27	Kirkland_Manholes-2460	20.42	36.9	7.72	8	PVC	0.01	1,959	9	19	28	1.5		
Kirkland_Main-1360	Kirkland_Manholes-2106	63.43	Kirkland_Manholes-2461	62.02	352	0.4	8	PVC	0.01	446	7	13	20	4.4	SM14-Ex-EX227	Drop Connection
Kirkland_Main-1361	Kirkland_Manholes-2462	20.98	Kirkland_Manholes-2460	20.42	12.7	4.42	8	PVC	0.01	1,483	9	6	16	1.1		
Kirkland_Main-1362	Kirkland_Manholes-2463	19.08	Kirkland_Manholes-2465	18.4	238.2	0.29	15	PVC	0.01	2,014	104	169	273	13.5		
Kirkland_Main-1363	Kirkland_Manholes-2464	24.34	Kirkland_Manholes-2465	24.15	46.3	0.4	8	PVC	0.01	446	14	32	47	10.5		Drop Connection
Kirkland_Main-1364	Kirkland_Manholes-2465	18.4	Kirkland_Manholes-2321	18.2	405.1	0.05	15	PVC	0.01	837	118	208	326	39		
Kirkland_Main-1365	Kirkland_Manholes-2466	40.06	Kirkland_Manholes-2464	24.34	133.9	11.74	8	PVC	0.01	2,416	14	26	40	1.6		
Kirkland_Main-1366	Kirkland_Manholes-754	246.56	Kirkland_Manholes-756	236.14	59.1	17.63	8	PVC	0.01	2,961	3	8	11	0.4		
Kirkland_Main-1367	Kirkland_Manholes-756	236.14	Kirkland_Manholes-759	235.08	17.7	6	8	PVC	0.01	1,727	3	12	15	0.9		
Kirkland_Main-1368	Kirkland_Manholes-759	235.08	Kirkland_Manholes-755	223.34	72.1	16.27	8	PVC	0.01	2,844	4	16	21	0.7		
Kirkland_Main-1369	Kirkland_Manholes-749	322.83	Kirkland_Manholes-748	311.92	207.7	5.25	8	PVC	0.01	1,616	17	37	54	3.3	SM14-Ex-EX71	
Kirkland_Main-1370	Kirkland_Manholes-743	333.02	Kirkland_Manholes-749	322.83	238.3	4.28	8	PVC	0.01	1,458	16	33	48	3.3	SM14-Ex-EX71	
Kirkland_Main-1371	Kirkland_Manholes-742	334.85	Kirkland_Manholes-743	333.02	278.1	0.66	8	PVC	0.01	572	10	20	30	5.3	SM14-Ex-EX71	
Kirkland_Main-1372	Kirkland_Manholes-744	343.43	Kirkland_Manholes-743	333.02	155.4	6.7	8	PVC	0.01	1,825	3	8	11	0.6	SM14-Ex-EX73	
Kirkland_Main-1373	Kirkland_Manholes-1551	340.04	Kirkland_Manholes-1548	334.13	358.9	1.65	8	PVC	0.01	905	1	4	5	0.6	SM14-Ex-EX122	
Kirkland_Main-1374	Kirkland_Manholes-1548	334.13	Kirkland_Manholes-1547	314.76	165.7	11.69	8	PVC	0.01	2,411	2	8	10	0.4	SM14-Ex-EX122	
Kirkland_Main-1375	Kirkland_Manholes-1554	318.87	Kirkland_Manholes-1547	314.76	166.1	2.48	8	PVC	0.01	1,109	3	12	16	1.4	SM14-Ex-EX122	
Kirkland_Main-1376	Kirkland_Manholes-1547	314.76	Kirkland_Manholes-1553	308.15	101.4	6.52	8	PVC	0.01	1,800	6	24	31	1.7	SM14-Ex-EX122	
Kirkland_Main-1377	Kirkland_Manholes-1549	335.84	Kirkland_Manholes-1550	330.23	147.4	3.81	8	PVC	0.01	1,375	1	4	5	0.4	SM14-Ex-EX122	
Kirkland_Main-1378	Kirkland_Manholes-1550	330.23	Kirkland_Manholes-1554	318.87	207.3	5.48	8	PVC	0.01	1,650	2	8	10	0.6	SM14-Ex-EX122	
Kirkland_Main-1379	Kirkland_Manholes-741	345.43	Kirkland_Manholes-696	340.09	318.5	1.68	8	PVC	0.01	913	2	4	6	0.6	SM14-Ex-EX74	
Kirkland_Main-1380	Kirkland_Manholes-696	340.09	Kirkland_Manholes-742	334.85	242.4	2.16	8	PVC	0.01	1,037	9	16	25	2.4	SM14-Ex-EX71	
Kirkland_Main-1381	Kirkland_Manholes-820	351.15	Kirkland_Manholes-821	328.81	334.9	6.67	8	PVC	0.01	1,821	1	4	5	0.3	SM14-Ex-EX72	
Kirkland_Main-1382	Kirkland_Manholes-745	351.42	Kirkland_Manholes-744	343.43	306.7	2.6	8	PVC	0.01	1,138	2	4	6	0.6	SM14-Ex-EX73	
Kirkland_Main-1383	Kirkland_Manholes-821	328.81	Kirkland_Manholes-746	326.06	200.6	1.37	8	PVC	0.01	825	2	8	10	1.2	SM14-Ex-EX72	
Kirkland_Main-1384	Kirkland_Manholes-746	326.06	Kirkland_Manholes-747	319.23	281	2.43	8	PVC	0.01	1,099	3	12	15	1.4	SM14-Ex-EX72	
Kirkland_Main-1385	Kirkland_Manholes-747	319.23	Kirkland_Manholes-748	311.92	331.6	2.2	8	PVC	0.01	1,047	4	16	20	1.9	SM14-Ex-EX72	
Kirkland_Main-1386	Kirkland_Manholes-1562	206.57	Kirkland_Manholes-1563	203.28	21.7	15.13	8	PVC	0.01	2,743	1	8	9	0.3		
Kirkland_Main-1387	Kirkland_Manholes-1560	251.28	Kirkland_Manholes-455	250.45	217.9	0.38	8	PVC	0.01	435	26	69	95	21.9	SM14-Ex-EX68	
Kirkland_Main-1388	Kirkland_Manholes-1559	253.89	Kirkland_Manholes-1560	251.28	258.2	1.01	8	PVC	0.01	709	25	65	90	12.7	SM14-Ex-EX68	

2021 (6-year) with Proposed Improvements - Peak Hour Flow - Pipe Capacity Table

Label	Upstream Node	Upstream Invert Elevation (ft)	Downstream Node	Downstream Invert Elevation (ft)	Length (ft)	Slope (%)	Diameter (in)	Material	Manning's n	Design Capacity (gpm)	Domestic Flow (gpm)	I/I Flow (gpm)	Total Flow (gpm)	Percent Full (%)	CIP No.	Notes
Kirkland_Main-1389	Kirkland_Manholes-317	146.79	Kirkland_Manholes-318	146.51	72.2	0.39	12	PVC	0.01	1,298	143	324	467	36	SM14-Ex-EX30	
Kirkland_Main-1390	Kirkland_Manholes-1052	151.4	Kirkland_Manholes-316	147.8	353.6	1.02	8	PVC	0.01	711	142	307	450	63.2		
Kirkland_Main-1392	Kirkland_Manholes-264	215.3	Kirkland_Manholes-1099	211.44	157	2.46	8	PVC	0.01	1,105	0	4	4	0.4		
Kirkland_Main-1398	Kirkland_Manholes-836	335.7	Kirkland_Manholes-835	335.4	62.1	0.48	8	PVC	0.01	490	13	28	41	8.4		
Kirkland_Main-1399	Kirkland_Manholes-835	335.4	Kirkland_Manholes-839	334.68	84.6	0.85	8	PVC	0.01	650	15	37	51	7.9		
Kirkland_Main-1400	Kirkland_Manholes-837	336.53	Kirkland_Manholes-836	335.7	248.7	0.33	8	PVC	0.01	407	11	24	36	8.8		
Kirkland_Main-1401	Kirkland_Manholes-838	337.31	Kirkland_Manholes-837	336.53	120.5	0.65	8	PVC	0.01	567	8	20	28	5		
Kirkland_Main-1402	Kirkland_Manholes-840	326.85	Kirkland_Manholes-841	325.94	71	1.28	8	PVC	0.01	798	22	57	79	9.9		
Kirkland_Main-1403	Kirkland_Manholes-841	325.94	Kirkland_Manholes-842	324.88	230.1	0.46	8	PVC	0.01	479	23	61	84	17.6		
Kirkland_Main-1404	Kirkland_Manholes-843	340.26	Kirkland_Manholes-842	324.88	172	8.94	8	PVC	0.01	2,108	3	4	7	0.3		
Kirkland_Main-1405	Kirkland_Manholes-844	342.5	Kirkland_Manholes-845	341.21	161.2	0.8	8	PVC	0.01	631	2	4	6	1		
Kirkland_Main-1406	Kirkland_Manholes-846	342.07	Kirkland_Manholes-845	341.21	84.3	1.02	8	PVC	0.01	712	4	16	20	2.8		
Kirkland_Main-1407	Kirkland_Manholes-845	341.21	Kirkland_Manholes-850	340.39	138.4	0.59	8	PVC	0.01	543	7	24	31	5.7		
Kirkland_Main-1408	Kirkland_Manholes-849	342.42	Kirkland_Manholes-846	342.07	117.3	0.3	8	PVC	0.01	385	3	12	15	4		
Kirkland_Main-1409	Kirkland_Manholes-847	343.01	Kirkland_Manholes-849	342.42	70.3	0.84	8	PVC	0.01	646	3	8	11	1.7		
Kirkland_Main-1410	Kirkland_Manholes-848	344.32	Kirkland_Manholes-847	343.01	145.5	0.9	8	PVC	0.01	669	3	4	7	1		
Kirkland_Main-1411	Kirkland_Manholes-850	340.39	Kirkland_Manholes-851	339.16	69.3	1.78	8	PVC	0.01	941	7	28	36	3.8		
Kirkland_Main-1412	Kirkland_Manholes-1538	302.73	Kirkland_Manholes-1537	302.03	362.6	0.19	8	PVC	0.01	310	7	16	23	7.6	SM14-Ex-EX124	
Kirkland_Main-1413	Kirkland_Manholes-1511	290.62	Kirkland_Manholes-1509	286.35	84.7	5.04	8	PVC	0.01	1,583	2	4	6	0.4		
Kirkland_Main-1414	Kirkland_Manholes-1510	287.19	Kirkland_Manholes-1509	286.35	79	1.06	8	PVC	0.01	727	1	4	5	0.7		
Kirkland_Main-1415	Kirkland_Manholes-1509	286.35	Kirkland_Manholes-1508	277.83	283.5	3.01	8	PVC	0.01	1,222	3	12	15	1.3		Drop Connection
Kirkland_Main-1416	Kirkland_Manholes-1537	302.03	Kirkland_Manholes-1536	298.86	351.3	0.9	8	PVC	0.01	670	11	20	31	4.6	SM14-Ex-EX124	
Kirkland_Main-1417	Kirkland_Manholes-762	287.2	Kirkland_Manholes-763	274.33	165.6	7.77	8	PVC	0.01	1,966	2	4	6	0.3	SM14-Ex-EX125	
Kirkland_Main-1418	Kirkland_Manholes-763	274.33	Kirkland_Manholes-1531	265.03	234.1	3.97	8	PVC	0.01	1,405	5	8	13	0.9	SM14-Ex-EX125	
Kirkland_Main-1419	Kirkland_Manholes-1541	294.69	Kirkland_Manholes-1543	289	216.2	2.63	8	PVC	0.01	1,144	6	16	23	2	SM14-Ex-EX123	
Kirkland_Main-1420	Kirkland_Manholes-1536	298.86	Kirkland_Manholes-1518	277.88	393.1	5.34	8	PVC	0.01	1,629	12	24	36	2.2	SM14-Ex-EX124	
Kirkland_Main-1421	Kirkland_Manholes-1544	284.46	Kirkland_Manholes-1545	272.4	63.3	19.06	8	PVC	0.01	3,078	10	24	34	1.1	SM14-Ex-EX123	
Kirkland_Main-1422	Kirkland_Manholes-1558	160.79	O-20	159.86	16.6	5.62	8	PVC	0.01	1,671	1	4	5	0.3		
Kirkland_Main-1424	Kirkland_Manholes-1557	161.32	O-21	159.86	64.6	2.26	8	PVC	0.01	1,060	2	8	10	0.9		
Kirkland_Main-1425	Kirkland_Manholes-1556	178.05	Kirkland_Manholes-1557	161.32	76.6	21.85	8	PVC	0.01	3,296	1	4	5	0.2		
Kirkland_Main-1427	Kirkland_Manholes-541	450.25	Kirkland_Manholes-542	440.69	230.2	4.15	8	PVC	0.01	1,437	11	69	80	5.6		
Kirkland_Main-1428	Kirkland_Manholes-542	440.69	Kirkland_Manholes-1978	440.32	89.3	0.41	8	PVC	0.01	454	11	73	84	18.6		
Kirkland_Main-1429	Kirkland_Manholes-544	449.4	Kirkland_Manholes-543	448.24	235	0.49	8	PVC	0.01	495	22	69	91	18.4		
Kirkland_Main-1430	Kirkland_Manholes-546	452.43	Kirkland_Manholes-545	450.22	300.2	0.74	8	PVC	0.01	605	18	61	79	13		
Kirkland_Main-1431	Kirkland_Manholes-545	450.22	Kirkland_Manholes-544	449.4	161.7	0.51	8	PVC	0.01	502	21	65	86	17.1		
Kirkland_Main-1432	Kirkland_Manholes-547	452.62	Kirkland_Manholes-546	452.43	162.6	0.12	8	PVC	0.01	243	16	57	73	29.9		
Kirkland_Main-1433	Kirkland_Manholes-548	453.36	Kirkland_Manholes-547	452.62	135.2	0.55	8	PVC	0.01	522	15	53	67	12.9		
Kirkland_Main-1434	Kirkland_Manholes-549	453.9	Kirkland_Manholes-548	453.36	128.1	0.42	8	PVC	0.01	456	12	41	53	11.6		
Kirkland_Main-1435	Kirkland_Manholes-552	455.6	Kirkland_Manholes-549	453.9	177.5	0.96	8	PVC	0.01	690	12	37	49	7.1		
Kirkland_Main-1436	Kirkland_Manholes-550	455.89	Kirkland_Manholes-552	455.6	183.6	0.16	8	PVC	0.01	280	1	4	5	1.7		
Kirkland_Main-1437	Kirkland_Manholes-551	462.06	Kirkland_Manholes-563	461.52	194.4	0.28	8	PVC	0.01	372	5	4	9	2.4		
Kirkland_Main-1438	Kirkland_Manholes-553	455.61	Kirkland_Manholes-552	455.6	92.3	0.01	8	PVC	0.01	73	11	28	39	53.8		
Kirkland_Main-1439	Kirkland_Manholes-554	456.45	Kirkland_Manholes-553	455.61	88.9	0.94	8	PVC	0.01	685	10	24	35	5.1		
Kirkland_Main-1440	Kirkland_Manholes-558	457.55	Kirkland_Manholes-554	456.45	287.7	0.38	8	PVC	0.01	436	8	16	24	5.5		
Kirkland_Main-1441	Kirkland_Manholes-557	460.23	Kirkland_Manholes-554	456.45	194.6	1.94	8	PVC	0.01	983	2	4	6	0.6		
Kirkland_Main-1442	Kirkland_Manholes-559	467.58	Kirkland_Manholes-558	457.55	209.6	4.79	8	PVC	0.01	1,542	2	4	6	0.4		
Kirkland_Main-1443	Kirkland_Manholes-563	461.52	Kirkland_Manholes-558	457.55	324.2	1.22	8	PVC	0.01	780	5	8	13	1.7		
Kirkland_Main-1444	Kirkland_Manholes-562	483.8	Kirkland_Manholes-560	483.4	99.9	0.4	8	PVC	0.01	446	2	4	6	1.3		
Kirkland_Main-1445	Kirkland_Manholes-565	468.54	Kirkland_Manholes-2020	468.34	312.4	0.06	10	PVC	0.01	326	90	146	237	72.7	SM14-2035-DF12	
Kirkland_Main-1446	Kirkland_Manholes-564	469.28	Kirkland_Manholes-565	468.54	228	0.32	10	PVC	0.01	728	90	142	232	31.9		
Kirkland_Main-1447	Kirkland_Manholes-567	470.28	Kirkland_Manholes-564	469.28	324.2	0.31	10	PVC	0.01	710	75	98	173	24.4		
Kirkland_Main-1448	Kirkland_Manholes-3045	483.35	Kirkland_Manholes-2029	479.06	297.6	1.44	8	PVC	0.01	846	3	8	11	1.3		
Kirkland_Main-1449	Kirkland_Manholes-568	471.29	Kirkland_Manholes-567	470.28	325	0.31	10	PVC	0.01	713	75	90	164	23		
Kirkland_Main-1450	Kirkland_Manholes-569	473.29	Kirkland_Manholes-568	471.29	178.4	1.12	10	PVC	0.01	1,354	74	85	160	11.8		
Kirkland_Main-1451	Kirkland_Manholes-570	473.5	Kirkland_Manholes-569	473.29	54.9	0.38	8	PVC	0.01	433	74	81	156	35.9		
Kirkland_Main-1452	Kirkland_Manholes-1406	473.57	Kirkland_Manholes-570	473.5	288.8	0.03	12	PVC	0.01	330	68	77	146	44.1	SM14-Ex-EX275	
Kirkland_Main-1453	Kirkland_Manholes-571	472.91	Kirkland_Manholes-567	470.28	172.6	1.52	8	PVC	0.01	870	0	4	4	0.5		
Kirkland_Main-1454	Kirkland_Manholes-575	113.73	Kirkland_Manholes-574	110.98	152.2	1.81	8	PVC	0.01	948	2	8	10	1	SM14-Ex-EX116	
Kirkland_Main-1455	Kirkland_Manholes-1665	94.21	Kirkland_Manholes-1666	89.71	26.9	16.73	8	PVC	0.01	2,883	32	91	122	4.2		
Kirkland_Main-1456	Kirkland_Manholes-957	315.92	Kirkland_Manholes-958	300.6	184.6	8.3	8	PVC	0.01	2,031	4	20	24	1.2		
Kirkland_Main-1457	Kirkland_Manholes-958	300.6	Kirkland_Manholes-942	300.01	173	0.34	8	PVC	0.01	412	5	24	29	7		
Kirkland_Main-1458	Kirkland_Manholes-960	258.67	Kirkland_Manholes-959	252.05	190.9	3.47	8	PVC	0.01	1,313	3	4	7	0.5		

2021 (6-year) with Proposed Improvements - Peak Hour Flow - Pipe Capacity Table

Label	Upstream Node	Upstream Invert Elevation (ft)	Downstream Node	Downstream Invert Elevation (ft)	Length (ft)	Slope (%)	Diameter (in)	Material	Manning's n	Design Capacity (gpm)	Domestic Flow (gpm)	I/I Flow (gpm)	Total Flow (gpm)	Percent Full (%)	CIP No.	Notes
Kirkland_Main-1459	Kirkland_Manholes-2752	253.8	Kirkland_Manholes-959	252.05	339.9	0.51	8	PVC	0.01	506	12	35	47	9.2		
Kirkland_Main-1460	Kirkland_Manholes-959	252.05	Kirkland_Manholes-963	250.7	229	0.59	8	PVC	0.01	541	17	43	60	11.1		
Kirkland_Main-1461	Kirkland_Manholes-961	263.75	Kirkland_Manholes-962	249.53	185.7	7.66	8	PVC	0.01	1,951	2	4	6	0.3		
Kirkland_Main-1462	Kirkland_Manholes-964	266.7	Kirkland_Manholes-963	250.7	315.2	5.08	8	PVC	0.01	1,589	1	4	5	0.3		
Kirkland_Main-1463	Kirkland_Manholes-963	250.7	Kirkland_Manholes-962	249.53	229.2	0.51	8	PVC	0.01	504	20	52	72	14.3		
Kirkland_Main-1464	Kirkland_Manholes-962	249.53	Kirkland_Manholes-966	247.26	381	0.59	8	PVC	0.01	544	23	61	84	15.4		
Kirkland_Main-1465	Kirkland_Manholes-965	252.45	Kirkland_Manholes-966	247.26	188.4	2.75	8	PVC	0.01	1,170	3	4	7	0.6		
Kirkland_Main-1466	Kirkland_Manholes-966	247.26	Kirkland_Manholes-967	246.35	132.7	0.69	8	PVC	0.01	584	28	69	97	16.6		
Kirkland_Main-1467	Kirkland_Manholes-968	245.61	Kirkland_Manholes-969	239.3	150	4.21	8	PVC	0.01	1,446	1	4	5	0.3		
Kirkland_Main-1468	Kirkland_Manholes-969	239.3	Kirkland_Manholes-970	236.6	291.2	0.93	8	PVC	0.01	679	1	9	10	1.5		
Kirkland_Main-1469	Kirkland_Manholes-970	236.6	Kirkland_Manholes-971	236.2	92.8	0.43	8	PVC	0.01	463	3	13	16	3.4		
Kirkland_Main-1470	Kirkland_Manholes-967	246.35	Kirkland_Manholes-972	246.27	41.8	0.2	8	PVC	0.01	314	28	74	102	32.3		
Kirkland_Main-1471	Kirkland_Manholes-971	236.2	Kirkland_Manholes-973	233.19	134.5	2.24	8	PVC	0.01	1,055	3	17	21	2	SM14-Ex-EX2	
Kirkland_Main-1472	Kirkland_Manholes-974	234.1	Kirkland_Manholes-973	233.19	211	0.43	8	PVC	0.01	463	2	9	11	2.3		
Kirkland_Main-1473	Kirkland_Manholes-987	239.5	Kirkland_Manholes-976	229.3	219.2	4.65	8	PVC	0.01	1,521	1	4	6	0.4		
Kirkland_Main-1474	Kirkland_Manholes-975	230.2	Kirkland_Manholes-976	229.3	22.7	3.96	8	PVC	0.01	1,404	6	35	41	2.9		
Kirkland_Main-1475	Kirkland_Manholes-973	233.19	Kirkland_Manholes-975	230.2	123.5	2.42	8	PVC	0.01	1,097	6	30	36	3.3		
Kirkland_Main-1476	Kirkland_Manholes-976	229.3	Kirkland_Manholes-977	225.95	181.2	1.85	8	PVC	0.01	959	8	43	51	5.3		
Kirkland_Main-1478	Kirkland_Manholes-1564	164.37	O-15	160	18.2	24.07	8	PVC	0.01	3,459	2	16	18	0.5		
Kirkland_Main-1479	Kirkland_Manholes-755	223.34	Kirkland_Manholes-1565	218.86	20.1	22.24	8	PVC	0.01	3,325	4	20	25	0.7		
Kirkland_Main-1480	Kirkland_Manholes-1567	133.87	Kirkland_Manholes-1566	130.52	314.6	1.06	8	PVC	0.01	728	4	8	12	1.6	SM14-Ex-EX119	
Kirkland_Main-1481	Kirkland_Manholes-1566	130.52	Kirkland_Manholes-1604	117.22	313.5	4.24	8	PVC	0.01	1,452	4	16	21	1.4	SM14-Ex-EX119	
Kirkland_Main-1482	Kirkland_Manholes-776	207.48	Kirkland_Manholes-775	172.73	191.1	18.19	8	PVC	0.01	3,007	5	28	34	1.1		
Kirkland_Main-1483	Kirkland_Manholes-1565	218.86	Kirkland_Manholes-776	207.48	52.1	21.84	8	PVC	0.01	3,295	4	24	29	0.9		
Kirkland_Main-1484	Kirkland_Manholes-1263	156.98	Kirkland_Manholes-1262	156.59	13.2	2.96	8	PVC	0.01	1,213	0	8	8	0.7	SM14-Ex-EX111	
Kirkland_Main-1485	Kirkland_Manholes-1262	156.59	Kirkland_Manholes-1261	144.57	314.4	3.82	8	PVC	0.01	1,379	5	41	46	3.4	SM14-Ex-EX111	
Kirkland_Main-1486	Kirkland_Manholes-1260	164.33	Kirkland_Manholes-1261	144.57	293.7	6.73	8	PVC	0.01	1,829	2	8	10	0.6	SM14-Ex-EX110	
Kirkland_Main-1488	Kirkland_Manholes-1259	154.8	Kirkland_Manholes-1258	154.28	130.3	0.4	8	PVC	0.01	445	7	33	40	9	SM14-Ex-EX108	
Kirkland_Main-1489	Kirkland_Manholes-1258	154.28	Kirkland_Manholes-1257	152.6	347	0.48	8	PVC	0.01	491	15	66	80	16.4	SM14-Ex-EX108	
Kirkland_Main-1490	Kirkland_Manholes-1257	152.6	Kirkland_Manholes-1256	151.53	24	4.46	8	PVC	0.01	1,489	16	74	90	6	SM14-Ex-EX108	
Kirkland_Main-1494	Kirkland_Manholes-2467	42.59	Kirkland_Manholes-2466	40.06	76.4	3.31	8	PVC	0.01	1,283	10	19	30	2.3		
Kirkland_Main-1495	Kirkland_Manholes-2469	49.1	Kirkland_Manholes-2467	42.59	138.2	4.71	8	PVC	0.01	1,530	9	13	22	1.4		
Kirkland_Main-1496	Kirkland_Manholes-2468	49.98	Kirkland_Manholes-2469	49.48	124.2	0.4	8	PVC	0.01	446	8	6	14	3.2		Drop Connection
Kirkland_Main-1498	Kirkland_Manholes-2470	236.6	Kirkland_Manholes-2472	223.64	225	5.76	8	PVC	0.01	1,692	2	4	6	0.3	SM14-Ex-EX282	
Kirkland_Main-1499	Kirkland_Manholes-2472	223.64	Kirkland_Manholes-2473	222.78	215.8	0.4	8	PVC	0.01	446	4	12	16	3.6	SM14-Ex-EX282	Drop Connection
Kirkland_Main-1500	Kirkland_Manholes-2473	207.49	Kirkland_Manholes-2474	188.45	212.3	8.97	8	PVC	0.01	2,111	6	16	22	1.1	SM14-Ex-EX282	
Kirkland_Main-1501	Kirkland_Manholes-2471	234.47	Kirkland_Manholes-2472	223.64	364.1	2.97	8	PVC	0.01	1,216	1	4	6	0.5	SM14-Ex-EX283	
Kirkland_Main-1502	Kirkland_Manholes-2474	188.45	Kirkland_Manholes-2476	187.5	225.3	0.42	8	PVC	0.01	458	8	24	32	7	SM14-Ex-EX282	
Kirkland_Main-1505	Kirkland_Manholes-2492	55.46	Kirkland_Manholes-2666	55.28	147.8	0.12	18	PVC	0.01	2,139	123	318	441	20.6	SM14-Ex-EX222	
Kirkland_Main-1506	Kirkland_Manholes-2088	57.39	Kirkland_Manholes-2492	55.46	144	1.34	18	PVC	0.01	7,094	94	269	363	5.1	SM14-Ex-EX222	
Kirkland_Main-1507	Kirkland_Manholes-2090	57.44	Kirkland_Manholes-2088	57.39	370.9	0.01	18	PVC	0.01	712	94	257	351	49.3	SM14-Ex-EX222	
Kirkland_Main-1508	Kirkland_Manholes-2089	58.23	Kirkland_Manholes-2088	57.39	14.1	5.97	8	PVC	0.01	1,723	0	6	6	0.4		
Kirkland_Main-1509	Kirkland_Manholes-2620	281.06	Kirkland_Manholes-2618	278.4	382.5	0.7	8	PVC	0.01	588	2	8	10	1.7	SM14-Ex-EX299	
Kirkland_Main-1510	Kirkland_Manholes-2604	283.17	Kirkland_Manholes-2620	281.06	375.6	0.56	8	PVC	0.01	528	1	4	5	0.9	SM14-Ex-EX299	
Kirkland_Main-1512	Kirkland_Manholes-2621	277.53	Kirkland_Manholes-2433	276.88	161.5	0.4	8	PVC	0.01	446	1	4	6	1.2	SM14-Ex-EX244	Drop Connection
Kirkland_Main-1513	Kirkland_Manholes-2623	277.98	Kirkland_Manholes-2622	271.8	433.3	1.43	8	PVC	0.01	842	1	4	5	0.6	SM14-Ex-EX281	
Kirkland_Main-1514	Kirkland_Manholes-2622	271.8	Kirkland_Manholes-2625	260.54	221.9	5.07	8	PVC	0.01	1,588	2	8	10	0.6	SM14-Ex-EX281	
Kirkland_Main-1515	Kirkland_Manholes-2624	276.22	Kirkland_Manholes-2635	275.48	185.1	0.4	8	PVC	0.01	446	1	4	5	1.1	SM14-Ex-EX294	
Kirkland_Main-1516	Kirkland_Manholes-2625	260.54	Kirkland_Manholes-2626	246.92	188.3	7.23	8	PVC	0.01	1,896	2	12	14	0.7	SM14-Ex-EX281	
Kirkland_Main-1517	Kirkland_Manholes-2626	246.92	Kirkland_Manholes-2627	215.5	237.8	13.21	8	PVC	0.01	2,563	2	16	19	0.7	SM14-Ex-EX281	
Kirkland_Main-1518	Kirkland_Manholes-2627	215.5	Kirkland_Manholes-2628	186	220.8	13.36	8	PVC	0.01	2,577	4	20	25	1	SM14-Ex-EX281	
Kirkland_Main-1519	Kirkland_Manholes-2476	187.5	Kirkland_Manholes-2628	186	397.3	0.38	8	PVC	0.01	433	11	28	39	9	SM14-Ex-EX282	
Kirkland_Main-1520	Kirkland_Manholes-2606	272.98	Kirkland_Manholes-2607	264.34	256.6	3.37	8	PVC	0.01	1,294	2	4	6	0.5	SM14-Ex-EX298	
Kirkland_Main-1521	Kirkland_Manholes-2607	264.34	Kirkland_Manholes-2608	229.39	401.2	8.71	8	PVC	0.01	2,081	5	8	13	0.6	SM14-Ex-EX298	Drop Connection
Kirkland_Main-1522	Kirkland_Manholes-2608	227.04	Kirkland_Manholes-2600	217.97	170.3	5.33	8	PVC	0.01	1,627	7	12	19	1.2	SM14-Ex-EX298	
Kirkland_Main-1523	Kirkland_Manholes-2630	232.51	Kirkland_Manholes-2629	172.55	421	14.24	8	PVC	0.01	2,661	11	20	31	1.2	SM14-Ex-EX295	
Kirkland_Main-1524	Kirkland_Manholes-1219	264.33	Kirkland_Manholes-1139	247.37	248	6.84	8	PVC	0.01	1,844	1	8	9	0.5	SM14-Ex-EX80	
Kirkland_Main-1525	Kirkland_Manholes-1139	247.37	Kirkland_Manholes-1138	221.13	248.6	10.56	8	PVC	0.01	2,291	3	16	19	0.8	SM14-Ex-EX80	
Kirkland_Main-1526	Kirkland_Manholes-1138	221.13	Kirkland_Manholes-1141	204.1	177.9	9.57	8	PVC	0.01	2,181	3	25	28	1.3	SM14-Ex-EX80	
Kirkland_Main-1527	Kirkland_Manholes-1152	135.47	Kirkland_Manholes-1811	129.72	351.2	1.64	8	PVC	0.01	902	15	74	89	9.8	SM10	
Kirkland_Main-1528	Kirkland_Manholes-1153	137.55	Kirkland_Manholes-1154	131.73	270.2	2.15	8	PVC	0.01	1,035	2	8	10	1	SM10	
Kirkland_Main-1529	Kirkland_Manholes-1154	131.73	Kirkland_Manholes-1155	122.09	288.9	3.34	8	PVC	0.01	1,288	3	16	19	1.5	SM10	

2021 (6-year) with Proposed Improvements - Peak Hour Flow - Pipe Capacity Table

Label	Upstream Node	Upstream Invert Elevation (ft)	Downstream Node	Downstream Invert Elevation (ft)	Length (ft)	Slope (%)	Diameter (in)	Material	Manning's n	Design Capacity (gpm)	Domestic Flow (gpm)	I/I Flow (gpm)	Total Flow (gpm)	Percent Full (%)	CIP No.	Notes
Kirkland_Main-1530	Kirkland_Manholes-1155	122.09	Kirkland_Manholes-1156	108.19	328.7	4.23	8	PVC	0.01	1,450	4	25	28	2	SM10	
Kirkland_Main-1531	Kirkland_Manholes-1156	108.19	Kirkland_Manholes-1157	99.29	118.4	7.51	8	PVC	0.01	1,933	5	33	38	2	SM10	
Kirkland_Main-1532	Kirkland_Manholes-1157	99.29	Kirkland_Manholes-1159	82.66	203.9	8.16	8	PVC	0.01	2,014	10	66	76	3.8	SM10	
Kirkland_Main-1533	Kirkland_Manholes-1159	82.66	Kirkland_Manholes-1160	77.11	29.4	18.89	8	PVC	0.01	3,064	11	74	85	2.8		
Kirkland_Main-1534	Kirkland_Manholes-1158	124.93	Kirkland_Manholes-1157	99.29	160.8	15.95	8	PVC	0.01	2,816	4	25	29	1	SM10	
Kirkland_Main-1535	Kirkland_Manholes-1162	78.51	Kirkland_Manholes-1160	77.11	390.4	0.36	15	PVC	0.01	2,257	79	420	849	37.6		
Kirkland_Main-1536	Kirkland_Manholes-1179	123.76	Kirkland_Manholes-1163	96.51	315	8.65	8	PVC	0.01	2,074	46	165	210	10.1	SM10	
Kirkland_Main-1537	Kirkland_Manholes-1163	96.51	Kirkland_Manholes-1161	78.67	122.8	14.53	8	PVC	0.01	2,687	53	222	276	10.3	SM14-Ex-EX77	
Kirkland_Main-1538	Kirkland_Manholes-1164	119.66	Kirkland_Manholes-1163	96.51	338.6	6.84	8	PVC	0.01	1,844	7	49	56	3.1	SM10	
Kirkland_Main-1539	Kirkland_Manholes-1165	133.24	Kirkland_Manholes-1164	119.66	224	6.06	8	PVC	0.01	1,736	6	41	47	2.7	SM10	
Kirkland_Main-1540	Kirkland_Manholes-1166	151.97	Kirkland_Manholes-1165	133.24	158.7	11.8	8	PVC	0.01	2,422	1	8	9	0.4	SM10	
Kirkland_Main-1541	Kirkland_Manholes-1167	140.51	Kirkland_Manholes-1165	133.24	127.8	5.69	8	PVC	0.01	1,681	5	25	30	1.8	SM10	
Kirkland_Main-1542	Kirkland_Manholes-1168	149.52	Kirkland_Manholes-1167	140.51	328.4	2.74	8	PVC	0.01	1,168	4	16	20	1.7	SM10	
Kirkland_Main-1543	Kirkland_Manholes-1169	156.83	Kirkland_Manholes-1168	149.52	316.3	2.31	8	PVC	0.01	1,072	1	8	10	0.9	SM10	
Kirkland_Main-1544	Kirkland_Manholes-662	248.07	Kirkland_Manholes-651	247.63	225.4	0.2	15	PVC	0.01	1,665	279	1,038	1,317	79.1	SM14-2035-DF9	
Kirkland_Main-1545	Kirkland_Manholes-653	238.2	Kirkland_Manholes-639	237.89	305.4	0.1	21	PVC	0.01	2,946	238	488	726	24.7		
Kirkland_Main-1546	Kirkland_Manholes-654	239.59	Kirkland_Manholes-653	238.2	298.1	0.47	21	PVC	0.01	6,313	237	484	722	11.4		
Kirkland_Main-1547	Kirkland_Manholes-655	240	Kirkland_Manholes-654	239.59	255.9	0.16	21	PVC	0.01	3,700	237	480	717	19.4		Drop Connection
Kirkland_Main-1548	Kirkland_Manholes-1574	241.8	Kirkland_Manholes-657	241.69	265.5	0.04	21	PVC	0.01	1,882	235	468	703	37.4		
Kirkland_Main-1549	Kirkland_Manholes-657	241.69	Kirkland_Manholes-656	240.1	132.5	1.2	21	PVC	0.01	10,129	235	472	707	7		
Kirkland_Main-1550	Kirkland_Manholes-656	240.1	Kirkland_Manholes-655	240	131.8	0.08	21	PVC	0.01	2,546	235	476	711	27.9		Drop Connection
Kirkland_Main-1551	Kirkland_Manholes-658	246.8	Kirkland_Manholes-659	246.11	66.6	1.04	8	PVC	0.01	718	1	12	13	1.8		
Kirkland_Main-1552	Kirkland_Manholes-660	246.84	Kirkland_Manholes-659	246.11	57.6	1.27	8	PVC	0.01	793	3	4	7	0.8		
Kirkland_Main-1553	Kirkland_Manholes-659	246.11	Kirkland_Manholes-661	245.17	89.4	1.05	8	PVC	0.01	723	3	20	24	3.3		
Kirkland_Main-1554	Kirkland_Manholes-651	247.63	Kirkland_Manholes-645	243.42	262.6	1.6	15	PVC	0.01	4,772	281	1,042	1,322	27.7	SM14-2035-DF9	
Kirkland_Main-1555	Kirkland_Manholes-652	251.94	Kirkland_Manholes-662	248.07	324.4	1.19	15	PVC	0.01	4,116	279	1,034	1,313	31.9	SM14-2035-DF9	
Kirkland_Main-1556	Kirkland_Manholes-664	268.55	Kirkland_Manholes-663	252.67	383.8	4.14	8	PVC	0.01	1,434	1	4	5	0.4		
Kirkland_Main-1557	Kirkland_Manholes-663	252.67	Kirkland_Manholes-652	251.94	362.7	0.2	15	PVC	0.01	1,691	279	1,029	1,308	77.4	SM14-2035-DF9	
Kirkland_Main-1558	Kirkland_Manholes-666	254.95	Kirkland_Manholes-665	253.2	321.8	0.54	15	PVC	0.01	2,780	250	920	1,169	42.1		
Kirkland_Main-1559	Kirkland_Manholes-665	253.2	Kirkland_Manholes-663	252.67	360.1	0.15	18	PVC	0.01	2,351	275	1,021	1,297	55.1	SM14-Ex-EX135	
Kirkland_Main-1560	Kirkland_Manholes-668	260.28	Kirkland_Manholes-667	256.8	251.1	1.39	8	PVC	0.01	830	4	4	8	1		
Kirkland_Main-1561	Kirkland_Manholes-667	256.8	Kirkland_Manholes-665	253.2	386.9	0.93	8	PVC	0.01	680	24	98	121	17.8		
Kirkland_Main-1562	Kirkland_Manholes-669	262.97	Kirkland_Manholes-667	256.8	300.6	2.05	8	PVC	0.01	1,010	18	90	107	10.6		
Kirkland_Main-1563	Kirkland_Manholes-671	267.47	Kirkland_Manholes-670	264.24	114.1	2.83	8	PVC	0.01	1,186	8	24	32	2.7		
Kirkland_Main-1564	Kirkland_Manholes-672	266.2	Kirkland_Manholes-670	264.24	209.3	0.94	8	PVC	0.01	682	9	57	66	9.7		
Kirkland_Main-1565	Kirkland_Manholes-670	264.24	Kirkland_Manholes-669	262.97	88.5	1.43	8	PVC	0.01	844	17	85	102	12.1		
Kirkland_Main-1567	Kirkland_Manholes-676	280.09	Kirkland_Manholes-674	276.15	217.6	1.81	8	PVC	0.01	949	3	4	7	0.7		
Kirkland_Main-1568	Kirkland_Manholes-674	276.15	Kirkland_Manholes-675	275.52	20.5	3.07	8	PVC	0.01	1,235	6	16	22	1.8		
Kirkland_Main-1569	Kirkland_Manholes-673	281.46	Kirkland_Manholes-674	276.15	196.8	2.7	8	PVC	0.01	1,158	2	8	10	0.9		
Kirkland_Main-1570	Kirkland_Manholes-675	275.52	Kirkland_Manholes-671	267.47	256.7	3.14	8	PVC	0.01	1,249	6	20	27	2.1		
Kirkland_Main-1571	Kirkland_Manholes-677	287.02	Kirkland_Manholes-673	281.46	185.8	2.99	8	PVC	0.01	1,220	1	4	5	0.4		
Kirkland_Main-1572	Kirkland_Manholes-1728	26.2	Kirkland_Manholes-1729	25.06	120.1	0.95	12	PVC	0.01	2,026	93	58	151	7.4		
Kirkland_Main-1573	Kirkland_Manholes-1727	26.48	Kirkland_Manholes-1728	26.2	59.2	0.47	8	PVC	0.01	485	59	33	92	18.9		
Kirkland_Main-1574	Kirkland_Manholes-1724	26.68	Kirkland_Manholes-1727	26.48	122.2	0.16	8	PVC	0.01	285	59	25	83	29.3		
Kirkland_Main-1575	Kirkland_Manholes-1725	28.56	Kirkland_Manholes-1724	26.68	150.5	1.25	8	PVC	0.01	788	39	16	56	7.1		
Kirkland_Main-1576	Kirkland_Manholes-1726	29.93	Kirkland_Manholes-1725	28.56	57.1	2.4	8	PVC	0.01	1,092	23	8	31	2.9		
Kirkland_Main-1577	Kirkland_Manholes-1650	145.43	Kirkland_Manholes-1711	136.47	206.1	4.35	12	PVC	0.01	4,335	10	66	76	1.8	SM14-Ex-EX196	
Kirkland_Main-1578	Kirkland_Manholes-1751	37.07	Kirkland_Manholes-1750	33.34	26	14.35	8	PVC	0.01	2,670	0	8	8	0.3	SM14-Ex-EX164	
Kirkland_Main-1580	Kirkland_Manholes-2722	21	Kirkland_Manholes-3100	18.3	194.6	1.39	12	PVC	0.01	2,449	100	61	161	6.6	SM14-Ex-EX289	
Kirkland_Main-1585	Kirkland_Manholes-1750	33.34	Kirkland_Manholes-1749	32.74	150.9	0.4	8	PVC	0.01	446	2	16	18	4		Drop Connection
Kirkland_Main-1586	Kirkland_Manholes-1749	30.51	Kirkland_Manholes-1745	27.57	191.8	1.53	8	PVC	0.01	873	2	25	26	3		
Kirkland_Main-1587	Kirkland_Manholes-1744	27.68	Kirkland_Manholes-1745	27.57	23.9	0.46	8	PVC	0.01	479	0	8	8	1.7		
Kirkland_Main-1588	Kirkland_Manholes-1955	335.45	Kirkland_Manholes-1958	324.88	118.1	8.95	8	PVC	0.01	2,109	10	12	22	1		
Kirkland_Main-1589	Kirkland_Manholes-1958	324.88	Kirkland_Manholes-1939	324.34	135.7	0.4	8	PVC	0.01	446	10	20	30	6.7		
Kirkland_Main-1590	Kirkland_Manholes-1959	325.55	Kirkland_Manholes-1958	324.88	167.8	0.4	8	PVC	0.01	446	0	4	4	0.9		
Kirkland_Main-1591	Kirkland_Manholes-1960	312.18	Kirkland_Manholes-1892	301.26	279	3.91	8	PVC	0.01	1,395	0	4	4	0.3		
Kirkland_Main-1592	Kirkland_Manholes-1962	345.61	Kirkland_Manholes-1961	341.24	157.8	2.77	8	PVC	0.01	1,173	15	4	19	1.6		
Kirkland_Main-1593	Kirkland_Manholes-1961	341.24	Kirkland_Manholes-1964	341.08	188.7	0.08	8	PVC	0.01	205	28	65	93	45.3		
Kirkland_Main-1594	Kirkland_Manholes-1964	341.08	Kirkland_Manholes-1963	340.77	13.1	2.37	8	PVC	0.01	1,085	61	94	155	14.2		
Kirkland_Main-1595	Kirkland_Manholes-1965	345.05	Kirkland_Manholes-1964	341.08	103.3	3.84	8	PVC	0.01	1,382	33	24	58	4.2		
Kirkland_Main-1596	Kirkland_Manholes-1967	421.47	Kirkland_Manholes-1966	418.21	134.2	2.43	8	PVC	0.01	1,099	35	159	194	17.6	SM14-Ex-EX216	
Kirkland_Main-1597	Kirkland_Manholes-1968	421.67	Kirkland_Manholes-1967	421.47	23.9	0.84	8	PVC	0.01	646	34	155	189	29.2		

2021 (6-year) with Proposed Improvements - Peak Hour Flow - Pipe Capacity Table

Label	Upstream Node	Upstream Invert Elevation (ft)	Downstream Node	Downstream Invert Elevation (ft)	Length (ft)	Slope (%)	Diameter (in)	Material	Manning's n	Design Capacity (gpm)	Domestic Flow (gpm)	I/I Flow (gpm)	Total Flow (gpm)	Percent Full (%)	CIP No.	Notes
Kirkland_Main-1598	Kirkland_Manholes-1969	423.5	Kirkland_Manholes-1968	421.67	353.5	0.52	8	PVC	0.01	507	32	151	183	36		
Kirkland_Main-1599	Kirkland_Manholes-1970	425.5	Kirkland_Manholes-1969	423.5	200.6	1	8	PVC	0.01	704	4	16	20	2.9		
Kirkland_Main-1600	Kirkland_Manholes-1974	432	Kirkland_Manholes-1969	423.5	272.7	3.12	8	PVC	0.01	1,245	27	130	158	12.7		
Kirkland_Main-1601	Kirkland_Manholes-1971	425.8	Kirkland_Manholes-1970	425.5	74.8	0.4	8	PVC	0.01	446	3	12	15	3.4		
Kirkland_Main-1602	Kirkland_Manholes-1972	426.31	Kirkland_Manholes-1971	425.8	127.8	0.4	8	PVC	0.01	446	2	8	10	2.3		
Kirkland_Main-1603	Kirkland_Manholes-1973	430.86	Kirkland_Manholes-1972	426.31	87.6	5.19	8	PVC	0.01	1,607	1	4	5	0.3		
Kirkland_Main-1604	Kirkland_Manholes-2631	265.77	Kirkland_Manholes-2630	232.51	349	9.53	8	PVC	0.01	2,176	6	16	23	1	SM14-Ex-EX295	
Kirkland_Main-1605	Kirkland_Manholes-2632	276.84	Kirkland_Manholes-2631	265.77	241.2	4.59	8	PVC	0.01	1,510	4	12	16	1.1	SM14-Ex-EX295	
Kirkland_Main-1606	Kirkland_Manholes-2649	147.51	Kirkland_Manholes-2648	144.73	165.5	1.68	8	PVC	0.01	914	2	12	15	1.6		
Kirkland_Main-1607	Kirkland_Manholes-2648	144.73	Kirkland_Manholes-2647	132.46	109.5	11.21	8	PVC	0.01	2,360	4	18	22	0.9		
Kirkland_Main-1608	Kirkland_Manholes-2647	132.46	Kirkland_Manholes-2646	96.97	134.3	26.42	8	PVC	0.01	3,624	4	24	29	0.8		
Kirkland_Main-1609	Kirkland_Manholes-2646	96.97	Kirkland_Manholes-2645	79.04	111.3	16.11	8	PVC	0.01	2,830	7	31	37	1.3		
Kirkland_Main-1610	Kirkland_Manholes-2650	148.19	Kirkland_Manholes-2649	147.51	170.3	0.4	8	PVC	0.01	446	1	6	7	1.6		
Kirkland_Main-1611	Kirkland_Manholes-2651	121.43	Kirkland_Manholes-2652	57.18	251.5	25.55	8	PVC	0.01	3,564	2	6	8	0.2	SM14-Ex-EX292	
Kirkland_Main-1612	Kirkland_Manholes-2654	54.76	Kirkland_Manholes-2657	43.64	394.5	2.82	8	PVC	0.01	1,184	4	24	28	2.4	SM14-Ex-EX291	
Kirkland_Main-1613	Kirkland_Manholes-2653	56.99	Kirkland_Manholes-2654	54.76	13.8	16.21	8	PVC	0.01	2,839	4	18	22	0.8	SM14-Ex-EX292	
Kirkland_Main-1614	Kirkland_Manholes-2652	57.18	Kirkland_Manholes-2653	56.99	47.7	0.4	8	PVC	0.01	446	4	12	16	3.5	SM14-Ex-EX292	
Kirkland_Main-1615	Kirkland_Manholes-2657	43.64	Kirkland_Manholes-2656	33.93	250	3.88	8	PVC	0.01	1,389	5	31	35	2.5	SM14-Ex-EX291	
Kirkland_Main-1616	Kirkland_Manholes-2655	44.22	Kirkland_Manholes-2656	33.93	73.2	14.06	8	PVC	0.01	2,644	14	79	94	3.6	SM14-Ex-EX293	
Kirkland_Main-1617	Kirkland_Manholes-2656	33.93	Kirkland_Manholes-2658	29.62	118.6	3.63	8	PVC	0.01	1,344	19	116	135	10.1	SM14-Ex-EX291	
Kirkland_Main-1618	Kirkland_Manholes-2658	29.62	Kirkland_Manholes-2659	28.05	312.8	0.5	8	PVC	0.01	500	20	122	142	28.4	SM14-Ex-EX291	
Kirkland_Main-1619	Kirkland_Manholes-2659	28.05	Kirkland_Manholes-2660	26.87	281	0.42	8	PVC	0.01	457	21	128	149	32.7	SM14-Ex-EX291	
Kirkland_Main-1624	Kirkland_Manholes-2726	12.39	Kirkland_Manholes-2662	11.52	172.8	0.5	18	PVC	0.01	4,349	259	599	858	19.7	SM14-Ex-EX289	
Kirkland_Main-1625	Kirkland_Manholes-2666	55.28	Kirkland_Manholes-2667	55.1	203.4	0.09	18	PVC	0.01	1,823	123	324	447	24.5	SM14-Ex-EX222	
Kirkland_Main-1626	Kirkland_Manholes-2667	55.1	Kirkland_Manholes-2665	53.92	196.9	0.6	18	PVC	0.01	4,744	123	330	453	9.6	SM14-Ex-EX222	
Kirkland_Main-1627	Kirkland_Manholes-2665	53.92	Kirkland_Manholes-3102	53.77	398.5	0.04	18	PVC	0.01	1,189	123	336	459	38.6	SM14-Ex-EX222	
Kirkland_Main-1629	Kirkland_Manholes-2203	62.94	Kirkland_Manholes-3102	53.77	55.2	16.62	8	PVC	0.01	2,874	14	61	75	2.6	SM14-Ex-EX290	
Kirkland_Main-1633	Kirkland_Manholes-3101	52.44	Kirkland_Manholes-2663	50.64	51.5	3.5	18	PVC	0.01	11,462	140	434	574	5	SM14-Ex-EX222	
Kirkland_Main-1634	Kirkland_Manholes-250	115.74	Kirkland_Manholes-268	108.82	144.1	4.8	8	PVC	0.01	1,545	4	17	21	1.4	SM10	
Kirkland_Main-1635	Kirkland_Manholes-309	140.9	Kirkland_Manholes-308	114.39	431.7	6.14	8	PVC	0.01	1,747	3	9	12	0.7	SM10	
Kirkland_Main-1636	Kirkland_Manholes-308	114.39	Kirkland_Manholes-307	105.6	319	2.76	8	PVC	0.01	1,170	7	27	34	2.9	SM10	
Kirkland_Main-1637	Kirkland_Manholes-494	135.66	Kirkland_Manholes-307	105.6	436.1	6.89	8	PVC	0.01	1,851	3	9	12	0.7	SM10	
Kirkland_Main-1638	Kirkland_Manholes-241	14.7	Kirkland_Manholes-2765	13.19	59.4	2.54	18	PVC	0.01	9,768	395	1,138	1,533	15.7	SM3	
Kirkland_Main-1639	Kirkland_Manholes-240	17.1	Kirkland_Manholes-2765	13.19	342.3	1.14	12	PVC	0.01	2,222	159	426	886	39.9	SM14-Ex-EX42	
Kirkland_Main-1640	Kirkland_Manholes-239	27.77	Kirkland_Manholes-240	17.1	321.9	3.31	12	PVC	0.01	3,784	159	422	881	23.3	SM14-Ex-EX42	
Kirkland_Main-1641	Kirkland_Manholes-243	37.12	Kirkland_Manholes-239	27.77	158.7	5.89	12	PVC	0.01	5,046	157	413	871	17.3	SM14-Ex-EX38	
Kirkland_Main-1642	Kirkland_Manholes-244	47.57	Kirkland_Manholes-243	46.95	154.8	0.4	12	PVC	0.01	1,315	155	409	865	65.8	SM14-Ex-EX38	Drop Connection
Kirkland_Main-1643	Kirkland_Manholes-246	58	Kirkland_Manholes-244	47.57	272.3	3.83	8	PVC	0.01	1,380	155	404	860	62.4	SM14-Ex-EX38	
Kirkland_Main-1645	Kirkland_Manholes-901	304.32	Kirkland_Manholes-900	302.97	52	2.59	8	PVC	0.01	1,135	1	4	5	0.4		
Kirkland_Main-1646	Kirkland_Manholes-902	304.94	Kirkland_Manholes-900	302.97	236.8	0.83	8	PVC	0.01	643	1	4	5	0.7		
Kirkland_Main-1647	Kirkland_Manholes-900	302.97	Kirkland_Manholes-904	289.03	425.5	3.28	8	PVC	0.01	1,276	6	24	30	2.3		
Kirkland_Main-1648	Kirkland_Manholes-903	290.15	Kirkland_Manholes-904	289.03	62.2	1.8	8	PVC	0.01	946	14	61	75	7.9		
Kirkland_Main-1649	Kirkland_Manholes-904	289.03	Kirkland_Manholes-905	283.61	138.2	3.92	8	PVC	0.01	1,396	19	90	109	7.8		
Kirkland_Main-1650	Kirkland_Manholes-905	283.61	Kirkland_Manholes-912	277.93	121.5	4.68	8	PVC	0.01	1,525	20	94	113	7.4		
Kirkland_Main-1651	Kirkland_Manholes-906	293.01	Kirkland_Manholes-907	291.52	150.3	0.99	8	PVC	0.01	702	6	41	46	6.6		
Kirkland_Main-1652	Kirkland_Manholes-907	291.52	Kirkland_Manholes-908	290.53	109.9	0.9	8	PVC	0.01	669	7	45	51	7.7		
Kirkland_Main-1653	Kirkland_Manholes-908	290.53	Kirkland_Manholes-903	290.15	324	0.12	8	PVC	0.01	241	12	57	69	28.5		
Kirkland_Main-1654	Kirkland_Manholes-910	293.95	Kirkland_Manholes-908	290.53	193.3	1.77	8	PVC	0.01	938	5	8	13	1.4		
Kirkland_Main-1655	Kirkland_Manholes-909	297.88	Kirkland_Manholes-910	293.95	188.4	2.09	8	PVC	0.01	1,018	3	4	7	0.7		
Kirkland_Main-1656	Kirkland_Manholes-911	279.8	Kirkland_Manholes-912	277.93	207.2	0.9	8	PVC	0.01	670	2	4	6	1		
Kirkland_Main-1657	Kirkland_Manholes-912	277.93	Kirkland_Manholes-913	274.64	100.2	3.28	8	PVC	0.01	1,277	23	102	125	9.8		
Kirkland_Main-1658	Kirkland_Manholes-913	274.64	Kirkland_Manholes-917	265.16	288.9	3.28	8	PVC	0.01	1,277	24	106	130	10.2		
Kirkland_Main-1659	Kirkland_Manholes-890	280.21	Kirkland_Manholes-914	274.6	210.2	2.67	8	PVC	0.01	1,152	32	118	150	13		
Kirkland_Main-1660	Kirkland_Manholes-914	274.6	Kirkland_Manholes-915	272.06	86.6	2.93	8	PVC	0.01	1,207	35	130	166	13.7		
Kirkland_Main-1661	Kirkland_Manholes-915	272.06	Kirkland_Manholes-916	270.65	45.7	3.08	8	PVC	0.01	1,238	36	134	170	13.8		
Kirkland_Main-1662	Kirkland_Manholes-627	275.98	Kirkland_Manholes-914	274.6	212.1	0.65	8	PVC	0.01	569	3	8	11	1.9		
Kirkland_Main-1663	Kirkland_Manholes-916	270.65	Kirkland_Manholes-917	265.16	154.3	3.56	8	PVC	0.01	1,330	36	138	175	13.1		
Kirkland_Main-1664	Kirkland_Manholes-917	265.16	Kirkland_Manholes-918	264.4	332.4	0.23	12	PVC	0.01	994	62	252	314	31.6	SM14-Ex-EX136	
Kirkland_Main-1665	Kirkland_Manholes-918	264.4	Kirkland_Manholes-919	263.89	50.1	1.02	12	PVC	0.01	2,097	62	256	319	15.2	SM14-Ex-EX136	
Kirkland_Main-1666	Kirkland_Manholes-919	263.89	Kirkland_Manholes-920	263.16	175.4	0.42	12	PVC	0.01	1,341	63	260	323	24.1	SM14-Ex-EX136	
Kirkland_Main-1667	Kirkland_Manholes-687	264	Kirkland_Manholes-921	262.87	223.9	0.5	8	PVC	0.01	501	4	12	16	3.3		
Kirkland_Main-1668	Kirkland_Manholes-920	263.16	Kirkland_Manholes-921	262.87	116.1	0.25	12	PVC	0.01	1,039	64	264	328	31.6	SM14-Ex-EX136	

2021 (6-year) with Proposed Improvements - Peak Hour Flow - Pipe Capacity Table

Label	Upstream Node	Upstream Invert Elevation (ft)	Downstream Node	Downstream Invert Elevation (ft)	Length (ft)	Slope (%)	Diameter (in)	Material	Manning's n	Design Capacity (gpm)	Domestic Flow (gpm)	I/I Flow (gpm)	Total Flow (gpm)	Percent Full (%)	CIP No.	Notes
Kirkland_Main-1669	Kirkland_Manholes-2064	426.84	Kirkland_Manholes-2670	399.73	295.3	9.18	8	PVC	0.01	2,136	2	4	6	0.3		
Kirkland_Main-1670	Kirkland_Manholes-921	262.87	Kirkland_Manholes-940	262.57	126.3	0.24	12	PVC	0.01	1,013	68	281	349	34.4	SM14-Ex-EX136	
Kirkland_Main-1671	Kirkland_Manholes-940	262.57	Kirkland_Manholes-939	261.56	302.2	0.33	12	PVC	0.01	1,200	72	285	357	29.7	SM14-Ex-EX136	
Kirkland_Main-1672	Kirkland_Manholes-939	261.56	Kirkland_Manholes-938	261.15	139.9	0.29	12	PVC	0.01	1,125	73	289	362	32.1	SM14-Ex-EX136	Drop Connection
Kirkland_Main-1673	Kirkland_Manholes-925	289.69	Kirkland_Manholes-924	268.15	361.6	5.96	8	PVC	0.01	1,721	16	61	77	4.5		
Kirkland_Main-1674	Kirkland_Manholes-924	268.15	Kirkland_Manholes-923	268.09	97.9	0.06	15	PVC	0.01	933	148	501	649	69.5	SM14-Ex-EX138	
Kirkland_Main-1675	Kirkland_Manholes-922	269.99	Kirkland_Manholes-923	268.09	235	0.81	8	PVC	0.01	634	1	4	5	0.8		
Kirkland_Main-1676	Kirkland_Manholes-923	268.09	Kirkland_Manholes-929	267.98	60	0.18	12	PVC	0.01	890	149	509	658	73.9	SM14-2035-DF10	
Kirkland_Main-1678	Kirkland_Manholes-927	307.71	Kirkland_Manholes-926	302.74	56.6	8.77	8	PVC	0.01	2,089	7	8	15	0.7		
Kirkland_Main-1679	Kirkland_Manholes-926	302.74	Kirkland_Manholes-925	289.69	296	4.41	8	PVC	0.01	1,481	15	57	72	4.8		
Kirkland_Main-1680	Kirkland_Manholes-928	294.43	Kirkland_Manholes-930	277.33	346.1	4.94	8	PVC	0.01	1,567	3	4	7	0.4		
Kirkland_Main-1681	Kirkland_Manholes-930	277.33	Kirkland_Manholes-929	267.98	33.8	27.65	8	PVC	0.01	3,707	4	8	12	0.3		
Kirkland_Main-1682	Kirkland_Manholes-933	269.3	Kirkland_Manholes-932	267	200	1.15	8	PVC	0.01	756	2	4	6	0.9		
Kirkland_Main-1683	Kirkland_Manholes-929	267.98	Kirkland_Manholes-931	267.3	153.6	0.44	12	PVC	0.01	1,383	153	521	674	48.7		
Kirkland_Main-1684	Kirkland_Manholes-931	267.3	Kirkland_Manholes-932	267	103.9	0.29	12	PVC	0.01	1,117	154	525	678	60.7		
Kirkland_Main-1685	Kirkland_Manholes-932	267	Kirkland_Manholes-934	266.31	201.7	0.34	12	PVC	0.01	1,216	157	533	690	56.7		
Kirkland_Main-1686	Kirkland_Manholes-950	293.99	Kirkland_Manholes-934	266.31	270.7	10.22	8	PVC	0.01	2,254	7	33	40	1.8		
Kirkland_Main-1688	Kirkland_Manholes-934	266.31	Kirkland_Manholes-935	265.1	223.8	0.54	12	PVC	0.01	1,529	165	570	735	48.1		
Kirkland_Main-1689	Kirkland_Manholes-937	264.43	Kirkland_Manholes-938	264.12	49.3	0.62	12	PVC	0.01	1,641	174	623	797	48.6		Drop Connection
Kirkland_Main-1690	Kirkland_Manholes-936	264.57	Kirkland_Manholes-937	264.43	21.7	0.66	12	PVC	0.01	1,686	167	578	744	44.2		
Kirkland_Main-1691	Kirkland_Manholes-935	265.1	Kirkland_Manholes-936	264.57	71.3	0.74	12	PVC	0.01	1,788	167	574	740	41.4		
Kirkland_Main-1692	Kirkland_Manholes-938	257.09	Kirkland_Manholes-666	254.95	392.8	0.55	15	PVC	0.01	2,784	248	916	1,163	41.8		
Kirkland_Main-1693	Kirkland_Manholes-941	287.52	Kirkland_Manholes-937	264.43	281.4	8.21	8	PVC	0.01	2,020	7	41	48	2.4		
Kirkland_Main-1694	Kirkland_Manholes-942	300.01	Kirkland_Manholes-941	287.52	399.1	3.13	8	PVC	0.01	1,247	6	37	43	3.4		
Kirkland_Main-1695	Kirkland_Manholes-943	306.11	Kirkland_Manholes-944	304.9	190.1	0.64	8	PVC	0.01	563	1	4	5	0.9	SM14-Ex-EX137	
Kirkland_Main-1696	Kirkland_Manholes-946	335.98	Kirkland_Manholes-945	330.63	152.5	3.51	8	PVC	0.01	1,321	1	4	5	0.4		
Kirkland_Main-1697	Kirkland_Manholes-945	330.63	Kirkland_Manholes-944	304.9	238	10.81	8	PVC	0.01	2,318	2	8	10	0.4		
Kirkland_Main-1698	Kirkland_Manholes-947	299.2	Kirkland_Manholes-948	296.38	132	2.14	8	PVC	0.01	1,031	1	4	5	0.5	SM14-Ex-EX137	
Kirkland_Main-1699	Kirkland_Manholes-944	304.9	Kirkland_Manholes-948	296.38	218.3	3.9	8	PVC	0.01	1,393	4	16	20	1.4	SM14-Ex-EX137	
Kirkland_Main-1701	Kirkland_Manholes-949	295.21	Kirkland_Manholes-950	293.99	49	2.49	8	PVC	0.01	1,112	6	28	34	3.1		
Kirkland_Main-1702	Kirkland_Manholes-948	296.38	Kirkland_Manholes-949	295.21	143.9	0.81	8	PVC	0.01	636	5	24	30	4.7	SM14-Ex-EX137	
Kirkland_Main-1703	Kirkland_Manholes-951	321.2	Kirkland_Manholes-942	300.01	232.8	9.1	8	PVC	0.01	2,127	1	8	9	0.4		
Kirkland_Main-1704	Kirkland_Manholes-952	325.62	Kirkland_Manholes-951	321.2	323.7	1.37	8	PVC	0.01	824	1	4	5	0.6		
Kirkland_Main-1705	Kirkland_Manholes-953	318.51	Kirkland_Manholes-954	318.45	75.8	0.08	8	PVC	0.01	198	1	4	5	2.5		
Kirkland_Main-1706	Kirkland_Manholes-954	318.45	Kirkland_Manholes-955	318.15	133.7	0.22	8	PVC	0.01	334	1	8	9	2.8		
Kirkland_Main-1707	Kirkland_Manholes-1546	284.43	Kirkland_Manholes-1545	272.4	160.7	7.49	8	PVC	0.01	1,929	9	41	50	2.6	SM14-Ex-EX121	
Kirkland_Main-1708	Kirkland_Manholes-750	289.43	Kirkland_Manholes-1546	284.43	152.8	3.27	8	PVC	0.01	1,275	3	8	11	0.8	SM14-Ex-EX121	
Kirkland_Main-1709	Kirkland_Manholes-1553	308.15	Kirkland_Manholes-1546	284.43	340	6.98	8	PVC	0.01	1,862	6	28	35	1.9	SM14-Ex-EX122	
Kirkland_Main-1710	Kirkland_Manholes-751	298.52	Kirkland_Manholes-750	289.43	402.2	2.26	8	PVC	0.01	1,060	2	4	6	0.5	SM14-Ex-EX121	
Kirkland_Main-1711	Kirkland_Manholes-748	311.92	Kirkland_Manholes-752	265.45	362.2	12.83	8	PVC	0.01	2,525	22	57	79	3.1	SM14-Ex-EX71	
Kirkland_Main-1712	Kirkland_Manholes-753	247.15	Kirkland_Manholes-754	246.56	209.3	0.28	8	PVC	0.01	374	2	4	7	1.7		
Kirkland_Main-1713	Kirkland_Manholes-1355	420.81	Kirkland_Manholes-1357	417.32	183.1	1.91	8	PVC	0.01	973	10	37	46	4.7		
Kirkland_Main-1714	Kirkland_Manholes-1356	418.13	Kirkland_Manholes-1357	417.32	41.8	1.94	8	PVC	0.01	981	1	4	5	0.6	SM14-Ex-EX180	
Kirkland_Main-1715	Kirkland_Manholes-1357	417.32	Kirkland_Manholes-1358	410.38	295.5	2.35	8	PVC	0.01	1,080	12	45	57	5.3	SM14-Ex-EX180	
Kirkland_Main-1716	Kirkland_Manholes-1358	410.38	Kirkland_Manholes-1359	407.6	322.3	0.86	8	PVC	0.01	655	14	49	62	9.5	SM14-Ex-EX180	
Kirkland_Main-1717	Kirkland_Manholes-1359	407.6	Kirkland_Manholes-1364	404.91	317.2	0.85	8	PVC	0.01	649	16	53	69	10.6	SM14-Ex-EX180	
Kirkland_Main-1718	Kirkland_Manholes-1360	392.45	Kirkland_Manholes-1361	390.34	26.4	7.99	8	PVC	0.01	1,993	9	20	29	1.5	SM14-Ex-EX179	
Kirkland_Main-1719	Kirkland_Manholes-1361	390.34	Kirkland_Manholes-1371	389.7	160.2	0.4	8	PVC	0.01	446	26	81	108	24.1		Drop Connection
Kirkland_Main-1720	Kirkland_Manholes-1365	376.9	Kirkland_Manholes-1371	376.15	121.9	0.62	8	PVC	0.01	553	49	85	134	24.3		
Kirkland_Main-1721	Kirkland_Manholes-1366	377.95	Kirkland_Manholes-1365	376.9	166.8	0.63	8	PVC	0.01	559	49	81	130	23.3		
Kirkland_Main-1722	Kirkland_Manholes-1364	404.91	Kirkland_Manholes-1361	390.34	354.3	4.11	8	PVC	0.01	1,430	17	57	74	5.2	SM14-Ex-EX180	
Kirkland_Main-1723	Kirkland_Manholes-1362	399.37	Kirkland_Manholes-1360	392.45	312.9	2.21	8	PVC	0.01	1,049	5	16	22	2.1	SM14-Ex-EX179	
Kirkland_Main-1724	Kirkland_Manholes-1363	403.55	Kirkland_Manholes-1362	399.37	238	1.76	8	PVC	0.01	934	4	12	16	1.7	SM14-Ex-EX179	
Kirkland_Main-1726	Kirkland_Manholes-1367	392.51	Kirkland_Manholes-1906	388.2	267.7	1.61	8	PVC	0.01	895	8	4	12	1.4		
Kirkland_Main-1727	Kirkland_Manholes-1368	393.26	Kirkland_Manholes-1369	387.01	105.4	5.93	8	PVC	0.01	1,717	1	4	5	0.3	SM14-Ex-EX178	
Kirkland_Main-1728	Kirkland_Manholes-1369	387.01	Kirkland_Manholes-1370	385.7	133.5	0.98	8	PVC	0.01	698	1	8	9	1.3	SM14-Ex-EX178	
Kirkland_Main-1729	Kirkland_Manholes-1370	385.7	Kirkland_Manholes-1371	376.15	179.2	5.33	8	PVC	0.01	1,628	1	12	13	0.8	SM14-Ex-EX178	
Kirkland_Main-1730	Kirkland_Manholes-534	432.55	Kirkland_Manholes-1372	427.9	355.1	1.31	8	PVC	0.01	807	61	142	203	25.2	SM14-Ex-EX218	
Kirkland_Main-1731	Kirkland_Manholes-560	483.4	Kirkland_Manholes-561	481.3	94.5	2.22	8	PVC	0.01	1,051	3	8	11	1.1		
Kirkland_Main-1733	Kirkland_Manholes-561	481.3	Kirkland_Manholes-1374	479.93	141.7	0.97	8	PVC	0.01	693	4	12	16	2.4		
Kirkland_Main-1734	Kirkland_Manholes-1376	483.23	Kirkland_Manholes-1375	479.6	272.8	1.33	8	PVC	0.01	813	3	4	7	0.8		
Kirkland_Main-1735	Kirkland_Manholes-1375	479.6	Kirkland_Manholes-1377	478.89	93.1	0.76	8	PVC	0.01	616	7	24	32	5.1		

2021 (6-year) with Proposed Improvements - Peak Hour Flow - Pipe Capacity Table

Label	Upstream Node	Upstream Invert Elevation (ft)	Downstream Node	Downstream Invert Elevation (ft)	Length (ft)	Slope (%)	Diameter (in)	Material	Manning's n	Design Capacity (gpm)	Domestic Flow (gpm)	I/I Flow (gpm)	Total Flow (gpm)	Percent Full (%)	CIP No.	Notes
Kirkland_Main-1736	Kirkland_Manholes-1377	478.89	Kirkland_Manholes-1378	472.9	259	2.31	8	PVC	0.01	1,072	9	28	37	3.5		
Kirkland_Main-1737	Kirkland_Manholes-1378	472.9	Kirkland_Manholes-1379	471.21	302	0.56	8	PVC	0.01	527	12	33	45	8.5		
Kirkland_Main-1738	Kirkland_Manholes-1374	479.93	Kirkland_Manholes-1375	479.6	219.3	0.15	8	PVC	0.01	274	4	16	21	7.5		
Kirkland_Main-1739	Kirkland_Manholes-1379	471.21	Kirkland_Manholes-564	469.28	271.7	0.71	8	PVC	0.01	594	13	37	50	8.4		
Kirkland_Main-1740	Kirkland_Manholes-340	235.81	Kirkland_Manholes-341	235.59	47.2	0.47	8	PVC	0.01	482	17	81	99	20.5		
Kirkland_Main-1741	Kirkland_Manholes-341	235.59	Kirkland_Manholes-342	234.97	31.7	1.95	8	PVC	0.01	986	23	130	154	15.6	SM14-Ex-EX49	
Kirkland_Main-1742	Kirkland_Manholes-342	234.97	Kirkland_Manholes-351	234.93	111.2	0.04	12	PVC	0.01	394	23	134	158	40	SM14-Ex-EX49	
Kirkland_Main-1743	Kirkland_Manholes-345	279.43	Kirkland_Manholes-344	279.2	57.3	0.4	8	PVC	0.01	446	5	8	13	2.9		
Kirkland_Main-1744	Kirkland_Manholes-344	279.2	Kirkland_Manholes-346	254.2	328.7	7.61	8	PVC	0.01	1,944	7	12	19	1		
Kirkland_Main-1745	Kirkland_Manholes-346	254.2	Kirkland_Manholes-347	250.02	240.3	1.74	8	PVC	0.01	930	8	16	24	2.6		
Kirkland_Main-1746	Kirkland_Manholes-348	251.65	Kirkland_Manholes-347	250.02	50.6	3.22	8	PVC	0.01	1,266	2	4	6	0.5		
Kirkland_Main-1747	Kirkland_Manholes-347	250.02	Kirkland_Manholes-349	238.18	204.7	5.78	8	PVC	0.01	1,695	11	24	35	2.1		
Kirkland_Main-1748	Kirkland_Manholes-349	238.18	Kirkland_Manholes-350	235.63	111.7	2.28	8	PVC	0.01	1,065	12	28	40	3.8		
Kirkland_Main-1749	Kirkland_Manholes-1666	89.71	Kirkland_Manholes-1673	84.18	111.9	4.94	8	PVC	0.01	1,568	48	148	196	12.5		
Kirkland_Main-1750	Kirkland_Manholes-1672	91.63	Kirkland_Manholes-1666	89.71	163.9	1.17	8	PVC	0.01	763	1	8	9	1.2		
Kirkland_Main-1751	Kirkland_Manholes-1671	101.9	Kirkland_Manholes-1667	101.23	167.6	0.4	8	PVC	0.01	446	6	8	14	3.1		
Kirkland_Main-1752	Kirkland_Manholes-1669	132.92	Kirkland_Manholes-1668	119.52	315.3	4.25	8	PVC	0.01	1,454	4	8	12	0.8		
Kirkland_Main-1753	Kirkland_Manholes-1670	121.1	Kirkland_Manholes-1668	119.52	161.1	0.98	8	PVC	0.01	698	3	8	11	1.6		
Kirkland_Main-1754	Kirkland_Manholes-1673	84.18	Kirkland_Manholes-1674	78.95	158.5	3.3	8	PVC	0.01	1,281	48	157	204	16		
Kirkland_Main-1755	Kirkland_Manholes-1677	88.12	Kirkland_Manholes-1674	87.91	51.7	0.4	8	PVC	0.01	446	24	41	65	14.6		Drop Connection
Kirkland_Main-1756	Kirkland_Manholes-1675	105.24	Kirkland_Manholes-1676	98.96	116.6	5.39	8	PVC	0.01	1,636	4	8	12	0.7		
Kirkland_Main-1757	Kirkland_Manholes-859	309.2	Kirkland_Manholes-865	308.29	290.7	0.31	8	PVC	0.01	394	19	77	96	24.3	SM14-Ex-EX51	
Kirkland_Main-1758	Kirkland_Manholes-860	317.71	Kirkland_Manholes-859	309.2	202.9	4.19	8	PVC	0.01	1,444	15	69	84	5.8	SM14-Ex-EX52	
Kirkland_Main-1759	Kirkland_Manholes-861	327.02	Kirkland_Manholes-860	317.71	236.9	3.93	8	PVC	0.01	1,398	13	65	78	5.6	SM14-Ex-EX52	
Kirkland_Main-1760	Kirkland_Manholes-856	333.21	Kirkland_Manholes-861	327.02	162.2	3.82	8	PVC	0.01	1,377	11	61	72	5.2	SM14-Ex-EX52	
Kirkland_Main-1761	Kirkland_Manholes-862	335.56	Kirkland_Manholes-856	333.21	185.2	1.27	8	PVC	0.01	794	2	4	6	0.7	SM14-Ex-EX53	
Kirkland_Main-1762	Kirkland_Manholes-2254	240.28	Kirkland_Manholes-2253	239.74	205.7	0.26	8	PVC	0.01	361	0	4	4	1.1	SM14-Ex-EX247	
Kirkland_Main-1763	Kirkland_Manholes-863	341.24	Kirkland_Manholes-864	334.74	171.5	3.79	8	PVC	0.01	1,373	1	4	5	0.4	SM14-Ex-EX50	
Kirkland_Main-1764	Kirkland_Manholes-864	334.74	Kirkland_Manholes-865	308.29	391.4	6.76	8	PVC	0.01	1,833	3	8	12	0.6	SM14-Ex-EX50	
Kirkland_Main-1765	Kirkland_Manholes-866	314.35	Kirkland_Manholes-865	308.29	226.5	2.68	8	PVC	0.01	1,153	8	28	36	3.2	SM14-Ex-EX35	
Kirkland_Main-1766	Kirkland_Manholes-865	308.29	Kirkland_Manholes-392	305	233.2	1.41	8	PVC	0.01	837	32	118	150	17.9	SM14-Ex-EX50	
Kirkland_Main-1767	Kirkland_Manholes-867	319	Kirkland_Manholes-866	314.35	119.3	3.9	8	PVC	0.01	1,392	6	24	31	2.2	SM14-Ex-EX35	
Kirkland_Main-1768	Kirkland_Manholes-868	321.84	Kirkland_Manholes-867	319	90.7	3.13	8	PVC	0.01	1,247	6	20	26	2.1	SM14-Ex-EX35	
Kirkland_Main-1769	Kirkland_Manholes-869	325.94	Kirkland_Manholes-868	321.84	101.3	4.05	8	PVC	0.01	1,418	5	16	21	1.5	SM14-Ex-EX35	
Kirkland_Main-1770	Kirkland_Manholes-870	327.4	Kirkland_Manholes-869	325.94	99.3	1.47	8	PVC	0.01	855	2	4	6	0.7	SM14-Ex-EX35	
Kirkland_Main-1771	Kirkland_Manholes-871	340.54	Kirkland_Manholes-872	339.98	74.2	0.75	8	PVC	0.01	612	1	4	5	0.8	SM14-Ex-EX35	
Kirkland_Main-1772	Kirkland_Manholes-872	339.98	Kirkland_Manholes-869	325.94	265.2	5.29	8	PVC	0.01	1,622	3	8	11	0.7	SM14-Ex-EX35	
Kirkland_Main-1773	Kirkland_Manholes-874	310.68	Kirkland_Manholes-382	308.23	108.1	2.27	8	PVC	0.01	1,062	2	4	6	0.5		
Kirkland_Main-1774	Kirkland_Manholes-875	310.4	Kirkland_Manholes-1073	302.05	254.5	3.28	8	PVC	0.01	1,277	3	4	7	0.6		
Kirkland_Main-1775	Kirkland_Manholes-2900	302.3	Kirkland_Manholes-876	301.25	160.8	0.65	8	PVC	0.01	570	8	41	48	8.5		
Kirkland_Main-1776	Kirkland_Manholes-876	301.25	Kirkland_Manholes-337	291.09	336.8	3.02	8	PVC	0.01	1,225	10	61	71	5.8		
Kirkland_Main-1777	Kirkland_Manholes-877	295.2	Kirkland_Manholes-884	291.06	114.3	3.62	8	PVC	0.01	1,342	0	4	5	0.3		
Kirkland_Main-1778	Kirkland_Manholes-884	291.06	Kirkland_Manholes-881	290.87	47	0.4	8	PVC	0.01	446	3	12	15	3.5		
Kirkland_Main-1779	Kirkland_Manholes-705	293.8	Kirkland_Manholes-884	291.06	213.2	1.29	8	PVC	0.01	800	2	4	6	0.8		
Kirkland_Main-1780	Kirkland_Manholes-881	290.87	Kirkland_Manholes-885	286.75	194.6	2.12	8	PVC	0.01	1,026	14	61	75	7.3		
Kirkland_Main-1781	Kirkland_Manholes-880	294.11	Kirkland_Manholes-881	290.87	199.3	1.63	8	PVC	0.01	899	10	45	55	6.1		
Kirkland_Main-1782	Kirkland_Manholes-879	310.92	Kirkland_Manholes-880	294.11	360	4.67	8	PVC	0.01	1,524	9	41	49	3.2		
Kirkland_Main-1783	Kirkland_Manholes-878	325.66	Kirkland_Manholes-879	310.92	320.8	4.59	8	PVC	0.01	1,511	6	37	43	2.8		
Kirkland_Main-1784	Kirkland_Manholes-886	291.6	Kirkland_Manholes-885	286.75	178.8	2.71	8	PVC	0.01	1,161	4	12	16	1.4		
Kirkland_Main-1785	Kirkland_Manholes-887	294.74	Kirkland_Manholes-886	291.6	177.9	1.77	8	PVC	0.01	937	2	8	11	1.1		
Kirkland_Main-1786	Kirkland_Manholes-888	307.6	Kirkland_Manholes-887	294.74	260	4.95	8	PVC	0.01	1,568	1	4	5	0.3		
Kirkland_Main-1788	Kirkland_Manholes-885	286.75	Kirkland_Manholes-889	285.3	34.9	4.16	8	PVC	0.01	1,437	18	77	95	6.6		
Kirkland_Main-1789	Kirkland_Manholes-336	286.9	Kirkland_Manholes-889	285.3	212.5	0.75	8	PVC	0.01	612	2	4	6	1		
Kirkland_Main-1790	Kirkland_Manholes-889	285.3	Kirkland_Manholes-890	280.21	299.8	1.7	8	PVC	0.01	919	21	85	106	11.5		
Kirkland_Main-1791	Kirkland_Manholes-891	282.85	Kirkland_Manholes-890	280.21	269.2	0.98	8	PVC	0.01	698	10	28	39	5.5		
Kirkland_Main-1792	Kirkland_Manholes-892	286	Kirkland_Manholes-891	282.85	80.7	3.9	8	PVC	0.01	1,393	8	24	32	2.3		
Kirkland_Main-1793	Kirkland_Manholes-895	303.91	Kirkland_Manholes-896	303.5	71	0.58	8	PVC	0.01	536	1	4	5	0.9		
Kirkland_Main-1794	Kirkland_Manholes-896	303.5	Kirkland_Manholes-893	293.25	259.5	3.95	8	PVC	0.01	1,401	3	12	15	1.1		
Kirkland_Main-1795	Kirkland_Manholes-894	293.53	Kirkland_Manholes-893	293.25	69.8	0.4	8	PVC	0.01	446	2	4	6	1.3		
Kirkland_Main-1796	Kirkland_Manholes-893	293.25	Kirkland_Manholes-892	286	208.9	3.47	8	PVC	0.01	1,314	6	20	26	2		
Kirkland_Main-1797	Kirkland_Manholes-897	317.07	Kirkland_Manholes-896	303.5	263.1	5.16	8	PVC	0.01	1,601	1	4	5	0.3		
Kirkland_Main-1798	Kirkland_Manholes-955	318.15	Kirkland_Manholes-956	317.42	90.2	0.81	8	PVC	0.01	634	1	12	14	2.1		

2021 (6-year) with Proposed Improvements - Peak Hour Flow - Pipe Capacity Table

Label	Upstream Node	Upstream Invert Elevation (ft)	Downstream Node	Downstream Invert Elevation (ft)	Length (ft)	Slope (%)	Diameter (in)	Material	Manning's n	Design Capacity (gpm)	Domestic Flow (gpm)	I/I Flow (gpm)	Total Flow (gpm)	Percent Full (%)	CIP No.	Notes
Kirkland_Main-1799	Kirkland_Manholes-956	317.42	Kirkland_Manholes-957	315.92	143.6	1.04	8	PVC	0.01	720	3	16	19	2.6		
Kirkland_Main-1800	Kirkland_Manholes-1294	129.1	Kirkland_Manholes-1295	119.7	303.2	3.1	8	PVC	0.01	1,242	4	8	12	1	SM14-Ex-EX115	
Kirkland_Main-1801	Kirkland_Manholes-1296	129.32	Kirkland_Manholes-1295	119.7	314.4	3.06	8	PVC	0.01	1,233	69	297	366	29.7	SM6	
Kirkland_Main-1802	Kirkland_Manholes-1301	241.1	Kirkland_Manholes-1300	221.25	201.1	9.87	8	PVC	0.01	2,215	4	16	20	0.9	SM14-Ex-EX98	
Kirkland_Main-1803	Kirkland_Manholes-1299	227.62	Kirkland_Manholes-1300	221.25	159.1	4	8	PVC	0.01	1,411	2	8	10	0.7	SM14-Ex-EX101	
Kirkland_Main-1804	Kirkland_Manholes-1300	221.25	Kirkland_Manholes-1250	210.15	248.6	4.47	8	PVC	0.01	1,490	6	33	39	2.6	SM14-Ex-EX101	
Kirkland_Main-1805	Kirkland_Manholes-1303	126.2	Kirkland_Manholes-1295	119.7	386.9	1.68	8	PVC	0.01	914	3	8	12	1.3	SM14-Ex-EX115	
Kirkland_Main-1806	Kirkland_Manholes-1304	180.12	Kirkland_Manholes-1258	154.28	295.6	8.74	8	PVC	0.01	2,084	6	25	31	1.5	SM14-Ex-EX106	
Kirkland_Main-1807	Kirkland_Manholes-1306	225.07	Kirkland_Manholes-227	223.31	140.1	1.26	8	PVC	0.01	790	7	26	33	4.2		
Kirkland_Main-1808	Kirkland_Manholes-1309	233.16	Kirkland_Manholes-1308	229.72	344.3	1	8	PVC	0.01	705	1	8	9	1.3		
Kirkland_Main-1809	Kirkland_Manholes-1308	229.72	Kirkland_Manholes-1307	211.15	175.8	10.56	8	PVC	0.01	2,292	4	16	21	0.9		
Kirkland_Main-1810	Kirkland_Manholes-1307	211.15	Kirkland_Manholes-1252	181.71	226.9	12.97	8	PVC	0.01	2,540	8	25	32	1.3	SM14-Ex-EX100	
Kirkland_Main-1812	Kirkland_Manholes-1275	185.58	Kirkland_Manholes-1276	172.95	322.8	3.91	8	PVC	0.01	1,395	3	8	11	0.8		
Kirkland_Main-1813	Kirkland_Manholes-1279	163.99	Kirkland_Manholes-1278	160.09	249.2	1.56	8	PVC	0.01	882	5	25	30	3.4	SM14-Ex-EX103	
Kirkland_Main-1814	Kirkland_Manholes-1597	180.84	Kirkland_Manholes-1601	173.67	138.4	5.18	8	PVC	0.01	1,605	60	163	223	13.9	SM14-Ex-EX121	
Kirkland_Main-1815	Kirkland_Manholes-1603	202.22	Kirkland_Manholes-1602	196.74	63.2	8.68	8	PVC	0.01	2,077	73	232	305	14.7	SM14-Ex-EX172	
Kirkland_Main-1817	Kirkland_Manholes-1570	121.83	Kirkland_Manholes-1604	117.22	301	1.53	8	PVC	0.01	872	4	8	12	1.4	SM14-Ex-EX120	
Kirkland_Main-1818	Kirkland_Manholes-1604	117.22	Kirkland_Manholes-1608	108.38	320.2	2.76	8	PVC	0.01	1,171	8	49	57	4.9	SM14-Ex-EX119	
Kirkland_Main-1823	Kirkland_Manholes-1607	115.82	Kirkland_Manholes-1608	108.38	281.1	2.65	8	PVC	0.01	1,147	2	8	10	0.9		
Kirkland_Main-1824	Kirkland_Manholes-1608	108.38	Kirkland_Manholes-1609	99.56	224.5	3.93	8	PVC	0.01	1,397	10	66	76	5.4	SM14-Ex-EX119	
Kirkland_Main-1825	Kirkland_Manholes-1609	99.56	Kirkland_Manholes-1610	98.61	103.1	0.92	8	PVC	0.01	677	11	74	85	12.5	SM14-Ex-EX119	
Kirkland_Main-1826	Kirkland_Manholes-1615	109.23	Kirkland_Manholes-1610	98.61	252.9	4.2	8	PVC	0.01	1,445	4	16	20	1.4		
Kirkland_Main-1827	Kirkland_Manholes-1610	98.61	Kirkland_Manholes-1611	98.01	137.6	0.44	8	PVC	0.01	466	14	99	113	24.3	SM14-Ex-EX160	
Kirkland_Main-1828	Kirkland_Manholes-1611	98.01	Kirkland_Manholes-1614	91.09	116.4	5.94	8	PVC	0.01	1,719	14	107	121	7.1	SM14-Ex-EX167	
Kirkland_Main-1830	Kirkland_Manholes-350	235.63	Kirkland_Manholes-351	234.93	99	0.71	8	PVC	0.01	593	14	33	46	7.8		
Kirkland_Main-1831	Kirkland_Manholes-351	234.93	Kirkland_Manholes-352	234.2	197.8	0.37	8	PVC	0.01	428	37	171	208	48.6		
Kirkland_Main-1832	Kirkland_Manholes-353	237.24	Kirkland_Manholes-352	234.2	58.3	5.21	8	PVC	0.01	1,609	1	8	9	0.5		
Kirkland_Main-1833	Kirkland_Manholes-354	240.05	Kirkland_Manholes-353	237.24	111.3	2.52	8	PVC	0.01	1,120	0	4	4	0.4		
Kirkland_Main-1834	Kirkland_Manholes-355	245.23	Kirkland_Manholes-357	224.18	289.7	7.27	8	PVC	0.01	1,901	1	4	5	0.3		
Kirkland_Main-1835	Kirkland_Manholes-357	224.18	Kirkland_Manholes-356	218.57	38.2	14.7	8	PVC	0.01	2,703	2	8	10	0.4		
Kirkland_Main-1836	Kirkland_Manholes-356	218.57	Kirkland_Manholes-358	217.4	168.8	0.69	21	PVC	0.01	7,697	628	1,974	2,602	33.8		
Kirkland_Main-1837	Kirkland_Manholes-358	217.4	Kirkland_Manholes-362	216.81	209.2	0.28	21	PVC	0.01	4,910	629	1,978	2,606	53.1		
Kirkland_Main-1838	Kirkland_Manholes-365	215.67	Kirkland_Manholes-366	214.9	145.3	0.53	8	PVC	0.01	513	1	4	5	1		
Kirkland_Main-1839	Kirkland_Manholes-366	214.9	Kirkland_Manholes-367	213.02	57.5	3.27	8	PVC	0.01	1,275	2	8	10	0.8		
Kirkland_Main-1840	Kirkland_Manholes-364	215.51	Kirkland_Manholes-367	213.02	231.6	1.07	18	PVC	0.01	6,354	640	2,035	2,675	42.1		
Kirkland_Main-1841	Kirkland_Manholes-363	216.4	Kirkland_Manholes-3048	215.92	195.5	0.25	21	PVC	0.01	4,581	634	1,998	2,632	57.5		
Kirkland_Main-1842	Kirkland_Manholes-361	216.74	Kirkland_Manholes-363	216.4	169.2	0.2	21	PVC	0.01	4,140	634	1,994	2,628	63.5		
Kirkland_Main-1843	Kirkland_Manholes-359	233.48	Kirkland_Manholes-360	230.84	309.4	0.85	8	PVC	0.01	651	3	4	7	1.1		
Kirkland_Main-1844	Kirkland_Manholes-360	230.84	Kirkland_Manholes-361	216.74	103.8	13.58	8	PVC	0.01	2,599	5	8	13	0.5		
Kirkland_Main-1845	Kirkland_Manholes-400	274.94	Kirkland_Manholes-399	268.35	106.2	6.21	8	PVC	0.01	1,757	2	4	6	0.3		
Kirkland_Main-1846	Kirkland_Manholes-399	268.35	Kirkland_Manholes-394	266.89	274.5	0.53	8	PVC	0.01	514	3	8	11	2.2		
Kirkland_Main-1847	Kirkland_Manholes-405	259.21	Kirkland_Manholes-404	259.2	31.6	0.03	8	PVC	0.01	125	0	4	4	3.2		
Kirkland_Main-1848	Kirkland_Manholes-404	259.2	Kirkland_Manholes-403	257.79	99.7	1.41	8	PVC	0.01	839	1	8	9	1		
Kirkland_Main-1849	Kirkland_Manholes-403	257.79	Kirkland_Manholes-402	257.52	55.3	0.49	8	PVC	0.01	493	1	12	13	2.6		
Kirkland_Main-1850	Kirkland_Manholes-402	257.52	Kirkland_Manholes-401	256.8	97.3	0.74	8	PVC	0.01	607	2	16	18	3		
Kirkland_Main-1851	Kirkland_Manholes-401	256.8	Kirkland_Manholes-395	253.88	284.1	1.03	8	PVC	0.01	715	2	20	23	3.2		
Kirkland_Main-1852	Kirkland_Manholes-406	288.66	Kirkland_Manholes-393	288.03	160.6	0.39	8	PVC	0.01	442	2	4	6	1.4		
Kirkland_Main-1853	Kirkland_Manholes-410	278.41	Kirkland_Manholes-409	264.84	185.6	7.31	8	PVC	0.01	1,906	2	4	6	0.3		
Kirkland_Main-1854	Kirkland_Manholes-425	290.3	Kirkland_Manholes-420	281.46	112.7	7.84	8	PVC	0.01	1,974	7	28	36	1.8		
Kirkland_Main-1855	Kirkland_Manholes-370	206.64	Kirkland_Manholes-2869	204.84	75.1	2.4	18	PVC	0.01	9,487	656	2,087	2,744	28.9		
Kirkland_Main-1856	Kirkland_Manholes-436	58.61	Kirkland_Manholes-437	58.56	24.6	0.22	15	PVC	0.01	1,769	267	653	920	52	SM14-Ex-EX30	
Kirkland_Main-1857	Kirkland_Manholes-437	58.56	Kirkland_Manholes-188	58.06	273	0.18	15	PVC	0.01	1,613	272	666	938	58.2	SM14-Ex-EX30	
Kirkland_Main-1858	Kirkland_Manholes-450	130.07	Kirkland_Manholes-448	127.19	147.1	1.96	8	PVC	0.01	987	5	17	22	2.2		
Kirkland_Main-1859	Kirkland_Manholes-448	127.19	Kirkland_Manholes-449	124.43	143	1.93	8	PVC	0.01	979	5	22	26	2.7		
Kirkland_Main-1860	Kirkland_Manholes-449	124.43	Kirkland_Manholes-446	123.86	143.4	0.4	8	PVC	0.01	446	5	26	31	6.9		Drop Connection
Kirkland_Main-1861	Kirkland_Manholes-447	95.3	Kirkland_Manholes-446	94.25	125.1	0.84	8	PVC	0.01	646	0	4	4	0.7		
Kirkland_Main-1862	Kirkland_Manholes-445	128.4	Kirkland_Manholes-444	92.89	173.2	20.5	8	PVC	0.01	3,192	0	4	4	0.1		
Kirkland_Main-1863	Kirkland_Manholes-446	94.25	Kirkland_Manholes-444	92.89	143.2	0.95	8	PVC	0.01	687	5	35	39	5.7		
Kirkland_Main-1864	Kirkland_Manholes-1522	291.35	Kirkland_Manholes-145	271.65	161.3	12.21	8	PVC	0.01	2,464	2	8	10	0.4		
Kirkland_Main-1865	Kirkland_Manholes-145	271.65	Kirkland_Manholes-1315	270.9	108.1	0.69	8	PVC	0.01	587	16	49	65	11.1		
Kirkland_Main-1866	Kirkland_Manholes-1314	312.02	Kirkland_Manholes-1522	291.35	177.8	11.62	8	PVC	0.01	2,404	2	4	6	0.2		
Kirkland_Main-1867	Kirkland_Manholes-1515	261.7	Kirkland_Manholes-1516	259.7	167.2	1.2	8	PVC	0.01	771	38	151	188	24.4	SM14-Ex-EX131	

2021 (6-year) with Proposed Improvements - Peak Hour Flow - Pipe Capacity Table

Label	Upstream Node	Upstream Invert Elevation (ft)	Downstream Node	Downstream Invert Elevation (ft)	Length (ft)	Slope (%)	Diameter (in)	Material	Manning's n	Design Capacity (gpm)	Domestic Flow (gpm)	I/I Flow (gpm)	Total Flow (gpm)	Percent Full (%)	CIP No.	Notes
Kirkland_Main-1868	Kirkland_Manholes-1516	259.7	Kirkland_Manholes-1593	256.67	397.6	0.76	8	PVC	0.01	615	42	155	197	31.9	SM14-Ex-EX131	
Kirkland_Main-1869	Kirkland_Manholes-1520	262.79	Kirkland_Manholes-1517	262.15	299	0.21	8	PVC	0.01	326	2	4	6	1.8	SM14-Ex-EX129	
Kirkland_Main-1870	Kirkland_Manholes-1518	277.88	Kirkland_Manholes-1517	262.15	157.4	10	8	PVC	0.01	2,229	13	28	42	1.9	SM14-Ex-EX124	
Kirkland_Main-1871	Kirkland_Manholes-1517	262.15	Kirkland_Manholes-1592	255.76	316.1	2.02	8	PVC	0.01	1,002	16	37	53	5.3	SM14-Ex-EX124	
Kirkland_Main-1872	Kirkland_Manholes-1519	265	Kirkland_Manholes-1521	258.62	235.2	2.71	8	PVC	0.01	1,161	1	4	5	0.5	SM14-Ex-EX128	
Kirkland_Main-1873	Kirkland_Manholes-1521	258.62	Kirkland_Manholes-1524	207.32	404.3	12.69	8	PVC	0.01	2,512	3	8	11	0.4	SM14-Ex-EX128	
Kirkland_Main-1874	Kirkland_Manholes-1552	337.73	Kirkland_Manholes-761	326.09	158.4	7.35	8	PVC	0.01	1,911	1	4	5	0.3	SM14-Ex-EX124	
Kirkland_Main-1875	Kirkland_Manholes-761	326.09	Kirkland_Manholes-760	311.91	217.3	6.53	8	PVC	0.01	1,801	5	8	13	0.7	SM14-Ex-EX124	
Kirkland_Main-1876	Kirkland_Manholes-760	311.91	Kirkland_Manholes-1538	302.73	273.6	3.36	8	PVC	0.01	1,292	7	12	19	1.5	SM14-Ex-EX124	
Kirkland_Main-1877	Kirkland_Manholes-1542	314.5	Kirkland_Manholes-1541	294.69	208.5	9.5	8	PVC	0.01	2,173	1	4	6	0.3	SM14-Ex-EX123	
Kirkland_Main-1878	Kirkland_Manholes-1540	296.8	Kirkland_Manholes-1541	294.69	76	2.78	8	PVC	0.01	1,175	4	8	12	1	SM14-Ex-EX123	
Kirkland_Main-1879	Kirkland_Manholes-1539	301.51	Kirkland_Manholes-1540	296.8	362.1	1.3	8	PVC	0.01	804	3	4	7	0.9	SM14-Ex-EX123	
Kirkland_Main-1880	Kirkland_Manholes-1523	194.94	Kirkland_Manholes-1597	180.84	315.7	4.47	8	PVC	0.01	1,490	51	146	198	13.3	SM14-Ex-EX121	
Kirkland_Main-1881	Kirkland_Manholes-1524	207.32	Kirkland_Manholes-1523	194.94	95.1	13.01	8	PVC	0.01	2,543	4	12	17	0.7	SM14-Ex-EX128	
Kirkland_Main-1882	Kirkland_Manholes-1528	217.87	Kirkland_Manholes-1523	194.94	317.2	7.23	8	PVC	0.01	1,896	46	130	176	9.3	SM14-Ex-EX121	
Kirkland_Main-1883	Kirkland_Manholes-1525	281.6	Kirkland_Manholes-1526	273.99	396.4	1.92	8	PVC	0.01	977	2	4	6	0.6	SM14-Ex-EX127	
Kirkland_Main-1884	Kirkland_Manholes-1526	273.99	Kirkland_Manholes-1527	258.94	183.5	8.2	8	PVC	0.01	2,019	3	8	11	0.6	SM14-Ex-EX127	
Kirkland_Main-1885	Kirkland_Manholes-1527	258.94	Kirkland_Manholes-1528	217.87	397.7	10.33	8	PVC	0.01	2,266	5	12	17	0.8	SM14-Ex-EX127	
Kirkland_Main-1886	Kirkland_Manholes-1535	304.79	Kirkland_Manholes-1534	301.8	155.7	1.92	8	PVC	0.01	977	0	4	5	0.5	SM14-Ex-EX126	
Kirkland_Main-1887	Kirkland_Manholes-1534	301.8	Kirkland_Manholes-1533	294.07	244.9	3.16	8	PVC	0.01	1,253	1	8	10	0.8	SM14-Ex-EX126	
Kirkland_Main-1888	Kirkland_Manholes-775	172.73	KC_Manholes-5	169.15	345.4	1.04	8	PVC	0.01	718	6	33	39	5.4		
Kirkland_Main-1889	Kirkland_Manholes-774	192.94	KC_Manholes-5	169.15	221.2	10.75	8	PVC	0.01	2,312	3	8	11	0.5		
Kirkland_Main-1890	Kirkland_Manholes-773	227.51	Kirkland_Manholes-774	192.94	170.2	20.31	8	PVC	0.01	3,177	1	4	5	0.2		
Kirkland_Main-1891	Kirkland_Manholes-772	214.68	Kirkland_Manholes-771	213.99	63.9	1.08	8	PVC	0.01	733	1	4	5	0.7		
Kirkland_Main-1892	Kirkland_Manholes-443	91.49	Kirkland_Manholes-442	83.66	233.7	3.35	8	PVC	0.01	1,291	46	48	94	7.3		
Kirkland_Main-1893	Kirkland_Manholes-442	83.66	Kirkland_Manholes-441	83.38	212.8	0.13	8	PVC	0.01	256	46	52	98	38.4		
Kirkland_Main-1894	Kirkland_Manholes-441	83.38	Kirkland_Manholes-433	80.24	108	2.91	8	PVC	0.01	1,202	46	56	103	8.5		
Kirkland_Main-1895	Kirkland_Manholes-432	97.11	Kirkland_Manholes-433	80.24	205.7	8.2	12	PVC	0.01	5,954	153	363	517	8.7	SM14-Ex-EX30	
Kirkland_Main-1896	Kirkland_Manholes-426	144.6	Kirkland_Manholes-427	143.58	254.5	0.4	12	PVC	0.01	1,315	147	337	484	36.8	SM14-Ex-EX30	
Kirkland_Main-1897	Kirkland_Manholes-427	143.58	Kirkland_Manholes-428	141.37	251.3	0.88	12	PVC	0.01	1,950	153	342	495	25.4	SM14-Ex-EX30	
Kirkland_Main-1898	Kirkland_Manholes-428	141.37	Kirkland_Manholes-429	138.12	320.6	1.01	12	PVC	0.01	2,093	153	346	499	23.9	SM14-Ex-EX30	
Kirkland_Main-1899	Kirkland_Manholes-429	138.12	Kirkland_Manholes-430	132.21	248.9	2.37	12	PVC	0.01	3,203	153	350	504	15.7	SM14-Ex-EX30	
Kirkland_Main-1900	Kirkland_Manholes-430	132.21	Kirkland_Manholes-431	114.37	310.4	5.75	12	PVC	0.01	4,983	153	355	508	10.2	SM14-Ex-EX30	
Kirkland_Main-1901	Kirkland_Manholes-431	114.37	Kirkland_Manholes-432	97.11	290.4	5.94	12	PVC	0.01	5,068	153	359	512	10.1	SM14-Ex-EX30	
Kirkland_Main-1902	Kirkland_Manholes-433	80.24	Kirkland_Manholes-434	74.08	187.9	3.28	12	PVC	0.01	3,764	200	424	624	16.6	SM14-Ex-EX30	
Kirkland_Main-1903	Kirkland_Manholes-434	74.08	Kirkland_Manholes-435	64.4	325.2	2.98	12	PVC	0.01	3,586	200	428	628	17.5	SM14-Ex-EX30	
Kirkland_Main-1904	Kirkland_Manholes-439	82.56	Kirkland_Manholes-438	74.46	270.1	3	8	PVC	0.01	1,221	0	4	4	0.4		
Kirkland_Main-1905	Kirkland_Manholes-438	74.46	Kirkland_Manholes-435	64.4	260.6	3.86	8	PVC	0.01	1,385	67	216	283	20.5	SM14-Ex-EX31	
Kirkland_Main-1906	Kirkland_Manholes-435	64.4	Kirkland_Manholes-436	58.61	312.5	1.85	12	PVC	0.01	2,828	267	649	916	32.4	SM14-Ex-EX30	
Kirkland_Main-1907	Kirkland_Manholes-1018	179.75	Kirkland_Manholes-451	173.02	146.6	4.59	8	PVC	0.01	1,511	58	173	231	15.3	SM14-Ex-EX31	
Kirkland_Main-1908	Kirkland_Manholes-453	159.42	Kirkland_Manholes-454	126.39	122.9	26.88	8	PVC	0.01	3,655	61	186	247	6.7	SM14-Ex-EX31	
Kirkland_Main-1909	Kirkland_Manholes-440	131.78	Kirkland_Manholes-454	126.39	361.7	1.49	8	PVC	0.01	861	6	17	23	2.7	SM14-Ex-EX31	
Kirkland_Main-1910	Kirkland_Manholes-1026	149.27	Kirkland_Manholes-440	131.78	156.8	11.16	8	PVC	0.01	2,355	5	13	18	0.8		
Kirkland_Main-1911	Kirkland_Manholes-451	173.02	Kirkland_Manholes-452	170.49	70.2	3.6	8	PVC	0.01	1,339	59	177	236	17.6	SM14-Ex-EX31	
Kirkland_Main-1912	Kirkland_Manholes-452	170.49	Kirkland_Manholes-453	159.42	88.9	12.45	8	PVC	0.01	2,488	59	182	241	9.7	SM14-Ex-EX31	
Kirkland_Main-1913	Kirkland_Manholes-454	126.39	Kirkland_Manholes-438	74.46	305.4	17.01	8	PVC	0.01	2,907	67	208	275	9.5	SM14-Ex-EX31	
Kirkland_Main-1914	Kirkland_Manholes-484	295.92	Kirkland_Manholes-483	294.22	69.9	2.43	8	PVC	0.01	1,098	2	4	6	0.5		
Kirkland_Main-1915	Kirkland_Manholes-483	294.22	Kirkland_Manholes-482	293.97	63.5	0.4	8	PVC	0.01	446	2	8	10	2.2		
Kirkland_Main-1916	Kirkland_Manholes-481	300.21	Kirkland_Manholes-482	293.97	44.6	13.98	8	PVC	0.01	2,636	8	41	48	1.8		
Kirkland_Main-1917	Kirkland_Manholes-477	317.64	Kirkland_Manholes-481	300.21	198.9	8.76	8	PVC	0.01	2,087	7	37	44	2.1		
Kirkland_Main-1918	Kirkland_Manholes-478	318.91	Kirkland_Manholes-477	317.64	130.7	0.97	8	PVC	0.01	695	6	33	38	5.5		
Kirkland_Main-1919	Kirkland_Manholes-479	328.09	Kirkland_Manholes-478	318.91	81.5	11.27	8	PVC	0.01	2,367	6	28	34	1.4		
Kirkland_Main-1920	Kirkland_Manholes-476	330.32	Kirkland_Manholes-475	322.42	166.4	4.75	8	PVC	0.01	1,536	2	4	6	0.4		
Kirkland_Main-1921	Kirkland_Manholes-475	322.42	Kirkland_Manholes-473	288.65	238.6	14.15	8	PVC	0.01	2,653	3	8	11	0.4		
Kirkland_Main-1922	Kirkland_Manholes-474	290.07	Kirkland_Manholes-473	288.65	187.1	0.76	8	PVC	0.01	614	3	4	7	1.1		
Kirkland_Main-1923	Kirkland_Manholes-473	288.65	Kirkland_Manholes-468	238.51	297.1	16.88	8	PVC	0.01	2,896	6	16	22	0.8		
Kirkland_Main-1924	Kirkland_Manholes-468	238.51	Kirkland_Manholes-462	219.91	120.9	15.39	8	PVC	0.01	2,766	7	20	27	1		
Kirkland_Main-1925	Kirkland_Manholes-463	227.23	Kirkland_Manholes-462	219.91	71.2	10.28	8	PVC	0.01	2,261	2	8	10	0.5		
Kirkland_Main-1926	Kirkland_Manholes-464	254.44	Kirkland_Manholes-463	227.23	171	15.91	8	PVC	0.01	2,812	2	4	6	0.2		
Kirkland_Main-1927	Kirkland_Manholes-462	219.91	Kirkland_Manholes-465	166.54	349.5	15.27	8	PVC	0.01	2,755	9	33	41	1.5		
Kirkland_Main-1928	Kirkland_Manholes-465	166.54	Kirkland_Manholes-466	159.47	196.4	3.6	8	PVC	0.01	1,338	10	37	46	3.5		
Kirkland_Main-1929	Kirkland_Manholes-467	166.95	Kirkland_Manholes-466	159.47	59.4	12.59	8	PVC	0.01	2,502	5	16	22	0.9		

2021 (6-year) with Proposed Improvements - Peak Hour Flow - Pipe Capacity Table

Label	Upstream Node	Upstream Invert Elevation (ft)	Downstream Node	Downstream Invert Elevation (ft)	Length (ft)	Slope (%)	Diameter (in)	Material	Manning's n	Design Capacity (gpm)	Domestic Flow (gpm)	I/I Flow (gpm)	Total Flow (gpm)	Percent Full (%)	CIP No.	Notes
Kirkland_Main-1930	Kirkland_Manholes-469	217.48	Kirkland_Manholes-470	207.2	162.3	6.34	8	PVC	0.01	1,775	1	4	5	0.3		
Kirkland_Main-1931	Kirkland_Manholes-471	208.89	Kirkland_Manholes-470	207.2	106.2	1.59	8	PVC	0.01	889	1	4	5	0.5		
Kirkland_Main-1932	Kirkland_Manholes-470	207.2	Kirkland_Manholes-472	192.62	137.7	10.59	8	PVC	0.01	2,294	2	12	14	0.6		
Kirkland_Main-1934	Kirkland_Manholes-489	206.41	Kirkland_Manholes-467	166.95	178.4	22.12	8	PVC	0.01	3,316	5	12	17	0.5		
Kirkland_Main-1935	Kirkland_Manholes-491	317.17	Kirkland_Manholes-492	300.1	240.7	7.09	8	PVC	0.01	1,878	3	8	11	0.6		
Kirkland_Main-1936	Kirkland_Manholes-492	300.1	Kirkland_Manholes-778	273.49	272.5	9.76	8	PVC	0.01	2,203	4	12	16	0.7		
Kirkland_Main-1937	Kirkland_Manholes-778	273.49	Kirkland_Manholes-783	251.91	166.5	12.96	8	PVC	0.01	2,539	5	16	21	0.8		
Kirkland_Main-1938	Kirkland_Manholes-783	251.91	Kirkland_Manholes-782	245.67	36.9	16.9	8	PVC	0.01	2,898	18	94	112	3.9		
Kirkland_Main-1939	Kirkland_Manholes-779	276.61	Kirkland_Manholes-486	260.65	97.8	16.33	8	PVC	0.01	2,849	1	4	5	0.2		
Kirkland_Main-1940	Kirkland_Manholes-486	260.65	Kirkland_Manholes-487	257.38	130.2	2.51	8	PVC	0.01	1,117	13	69	82	7.4		
Kirkland_Main-1942	Kirkland_Manholes-487	257.38	Kirkland_Manholes-783	251.91	251.1	2.18	8	PVC	0.01	1,041	14	73	87	8.4		
Kirkland_Main-1943	Kirkland_Manholes-781	270.16	Kirkland_Manholes-782	245.67	162	15.11	8	PVC	0.01	2,741	3	8	11	0.4		
Kirkland_Main-1944	Kirkland_Manholes-780	304.33	Kirkland_Manholes-781	270.16	338	10.11	8	PVC	0.01	2,242	2	4	6	0.3		
Kirkland_Main-1945	Kirkland_Manholes-782	245.67	Kirkland_Manholes-785	203.06	217.1	19.63	8	PVC	0.01	3,124	21	106	127	4.1		
Kirkland_Main-1946	Kirkland_Manholes-785	203.06	Kirkland_Manholes-784	186.93	82.2	19.62	8	PVC	0.01	3,123	22	110	132	4.2		
Kirkland_Main-1947	Kirkland_Manholes-784	186.93	Kirkland_Manholes-786	173.41	68.9	19.64	8	PVC	0.01	3,124	66	269	335	10.7		
Kirkland_Main-1948	Kirkland_Manholes-789	234.78	Kirkland_Manholes-788	234.04	150	0.49	8	PVC	0.01	495	1	4	5	0.9		
Kirkland_Main-1949	Kirkland_Manholes-788	234.04	Kirkland_Manholes-787	233.49	110.1	0.5	8	PVC	0.01	498	1	8	9	1.9		
Kirkland_Main-1950	Kirkland_Manholes-787	233.49	Kirkland_Manholes-790	227.7	106.2	5.45	8	PVC	0.01	1,646	2	12	14	0.9		
Kirkland_Main-1951	Kirkland_Manholes-485	265.21	Kirkland_Manholes-486	260.65	233.3	1.95	8	PVC	0.01	986	12	61	73	7.4		
Kirkland_Main-1952	Kirkland_Manholes-490	279.75	Kirkland_Manholes-485	265.21	234	6.21	8	PVC	0.01	1,758	10	57	67	3.8		
Kirkland_Main-1953	Kirkland_Manholes-482	293.97	Kirkland_Manholes-490	279.75	98.3	14.47	8	PVC	0.01	2,682	10	53	63	2.3		
Kirkland_Main-1954	Kirkland_Manholes-791	327.42	Kirkland_Manholes-491	317.17	287.1	3.57	8	PVC	0.01	1,332	2	4	6	0.4	SM14-Ex-EX47	
Kirkland_Main-1955	Kirkland_Manholes-796	329.52	Kirkland_Manholes-479	328.09	60.4	2.37	8	PVC	0.01	1,085	5	24	29	2.7		
Kirkland_Main-1956	Kirkland_Manholes-802	309.62	Kirkland_Manholes-801	301.38	220.6	3.74	8	PVC	0.01	1,363	2	4	6	0.4		
Kirkland_Main-1957	Kirkland_Manholes-801	301.38	Kirkland_Manholes-800	299.84	122.4	1.26	8	PVC	0.01	791	3	8	11	1.5		
Kirkland_Main-1958	Kirkland_Manholes-800	299.84	Kirkland_Manholes-799	299.17	200.4	0.33	8	PVC	0.01	408	5	12	17	4.1		
Kirkland_Main-1960	Kirkland_Manholes-797	330.09	Kirkland_Manholes-798	328.4	134	1.26	8	PVC	0.01	792	1	4	5	0.6		
Kirkland_Main-1961	Kirkland_Manholes-798	328.4	Kirkland_Manholes-799	299.17	250.4	11.67	8	PVC	0.01	2,409	3	8	11	0.5		
Kirkland_Main-1962	Kirkland_Manholes-799	299.17	Kirkland_Manholes-803	278.64	308	6.67	8	PVC	0.01	1,820	8	24	33	1.8		
Kirkland_Main-1963	Kirkland_Manholes-805	300.26	Kirkland_Manholes-806	295.73	104.4	4.34	8	PVC	0.01	1,468	7	24	31	2.1		
Kirkland_Main-1964	Kirkland_Manholes-806	295.73	Kirkland_Manholes-804	284.1	194.3	5.99	8	PVC	0.01	1,725	8	28	36	2.1		
Kirkland_Main-1965	Kirkland_Manholes-807	300.8	Kirkland_Manholes-805	300.26	78.9	0.68	8	PVC	0.01	583	7	20	27	4.6		
Kirkland_Main-1966	Kirkland_Manholes-819	270.84	Kirkland_Manholes-818	259.9	158.1	6.92	8	PVC	0.01	1,854	1	4	5	0.3		
Kirkland_Main-1967	Kirkland_Manholes-818	259.9	Kirkland_Manholes-816	252.1	223.2	3.49	8	PVC	0.01	1,318	3	8	11	0.9		
Kirkland_Main-1968	Kirkland_Manholes-816	252.1	Kirkland_Manholes-815	248.52	125.8	2.85	8	PVC	0.01	1,190	4	12	17	1.4		
Kirkland_Main-1969	Kirkland_Manholes-817	249.75	Kirkland_Manholes-815	248.52	170.1	0.72	8	PVC	0.01	600	2	4	6	1		
Kirkland_Main-1970	Kirkland_Manholes-814	224.81	Kirkland_Manholes-813	224.1	119.5	0.59	8	PVC	0.01	543	35	130	166	30.5		
Kirkland_Main-1971	Kirkland_Manholes-813	224.1	Kirkland_Manholes-811	220.71	283.2	1.2	8	PVC	0.01	771	37	134	172	22.2		
Kirkland_Main-1972	Kirkland_Manholes-810	231.27	Kirkland_Manholes-811	220.71	86.4	12.23	8	PVC	0.01	2,465	5	12	17	0.7		
Kirkland_Main-1973	Kirkland_Manholes-811	220.71	Kirkland_Manholes-812	219.12	123.9	1.28	8	PVC	0.01	799	43	151	193	24.2		
Kirkland_Main-1974	Kirkland_Manholes-809	238.49	Kirkland_Manholes-810	231.27	197.7	3.65	8	PVC	0.01	1,347	3	8	12	0.9		
Kirkland_Main-1975	Kirkland_Manholes-808	239.21	Kirkland_Manholes-809	238.5	177.5	0.4	8	PVC	0.01	446	2	4	6	1.3		Drop Connection
Kirkland_Main-1976	Kirkland_Manholes-812	219.12	Kirkland_Manholes-784	186.93	281.2	11.45	8	PVC	0.01	2,385	44	155	198	8.3		
Kirkland_Main-1977	Kirkland_Manholes-822	337.49	Kirkland_Manholes-823	321.62	170.9	9.29	8	PVC	0.01	2,149	1	4	5	0.2	SM14-Ex-EX69	
Kirkland_Main-1978	Kirkland_Manholes-823	321.62	Kirkland_Manholes-824	311.58	159.2	6.3	8	PVC	0.01	1,770	2	8	10	0.6	SM14-Ex-EX69	
Kirkland_Main-1979	Kirkland_Manholes-824	311.58	Kirkland_Manholes-825	285.55	131.7	19.76	8	PVC	0.01	3,134	2	12	14	0.5	SM14-Ex-EX69	
Kirkland_Main-1980	Kirkland_Manholes-825	285.55	Kirkland_Manholes-826	282.55	56.8	5.29	8	PVC	0.01	1,621	4	24	28	1.7	SM14-Ex-EX69	
Kirkland_Main-1981	Kirkland_Manholes-827	295.62	Kirkland_Manholes-828	285.89	94.5	10.29	8	PVC	0.01	2,262	0	4	5	0.2	SM14-Ex-EX69	
Kirkland_Main-1982	Kirkland_Manholes-826	282.55	Kirkland_Manholes-456	263.04	178.8	10.91	8	PVC	0.01	2,329	4	28	32	1.4	SM14-Ex-EX69	
Kirkland_Main-1983	Kirkland_Manholes-828	285.89	Kirkland_Manholes-825	285.55	69	0.49	8	PVC	0.01	495	1	8	9	1.9	SM14-Ex-EX69	
Kirkland_Main-1984	Kirkland_Manholes-790	227.7	Kirkland_Manholes-830	198.45	91.3	32.05	8	PVC	0.01	3,991	3	16	19	0.5		Slope verified in as-builts
Kirkland_Main-1985	Kirkland_Manholes-830	198.45	Kirkland_Manholes-831	192.6	15.9	36.68	8	PVC	0.01	4,270	4	24	29	0.7		Slope verified in as-builts
Kirkland_Main-1986	Kirkland_Manholes-831	192.6	Kirkland_Manholes-786	173.41	171.2	11.21	8	PVC	0.01	2,360	4	28	33	1.4	SM14-Ex-EX46	
Kirkland_Main-1987	Kirkland_Manholes-461	269.91	Kirkland_Manholes-460	268.13	121.9	1.46	8	PVC	0.01	852	1	4	6	0.7	SM14-Ex-EX68	
Kirkland_Main-1988	Kirkland_Manholes-460	268.13	Kirkland_Manholes-456	263.04	170.9	2.98	8	PVC	0.01	1,217	2	8	10	0.8	SM14-Ex-EX68	
Kirkland_Main-1989	Kirkland_Manholes-455	250.45	Kirkland_Manholes-457	235.02	148.1	10.42	8	PVC	0.01	2,276	32	114	146	6.4	SM14-Ex-EX67	
Kirkland_Main-1990	Kirkland_Manholes-457	235.02	Kirkland_Manholes-458	212.1	153.1	14.97	8	PVC	0.01	2,728	33	122	155	5.7	SM14-Ex-EX67	
Kirkland_Main-1991	Kirkland_Manholes-459	247.75	Kirkland_Manholes-457	235.02	263.1	4.84	8	PVC	0.01	1,551	1	4	5	0.3	SM14-Ex-EX67	
Kirkland_Main-1992	Kirkland_Manholes-456	263.04	Kirkland_Manholes-455	262.36	18.8	3.61	8	PVC	0.01	1,339	6	41	46	3.5	SM14-Ex-EX68	Drop Connection
Kirkland_Main-1993	Kirkland_Manholes-792	342.6	Kirkland_Manholes-832	339.26	96.2	3.47	8	PVC	0.01	1,314	1	4	5	0.4	SM14-Ex-EX70	
Kirkland_Main-1994	Kirkland_Manholes-793	339.56	Kirkland_Manholes-832	339.26	76	0.4	8	PVC	0.01	446	2	4	6	1.4	SM14-Ex-EX70	

2021 (6-year) with Proposed Improvements - Peak Hour Flow - Pipe Capacity Table

Label	Upstream Node	Upstream Invert Elevation (ft)	Downstream Node	Downstream Invert Elevation (ft)	Length (ft)	Slope (%)	Diameter (in)	Material	Manning's n	Design Capacity (gpm)	Domestic Flow (gpm)	I/I Flow (gpm)	Total Flow (gpm)	Percent Full (%)	CIP No.	Notes
Kirkland_Main-1997	Kirkland_Manholes-988	238.57	Kirkland_Manholes-989	235.68	166.4	1.74	8	PVC	0.01	929	1	4	6	0.6		
Kirkland_Main-1998	Kirkland_Manholes-989	235.68	Kirkland_Manholes-990	231.8	65.1	5.96	8	PVC	0.01	1,721	3	9	11	0.6		
Kirkland_Main-1999	Kirkland_Manholes-990	231.8	Kirkland_Manholes-991	230.6	208.7	0.57	8	PVC	0.01	535	4	13	17	3.2		
Kirkland_Main-2000	Kirkland_Manholes-992	230.9	Kirkland_Manholes-991	230.6	22.8	1.32	8	PVC	0.01	809	1	4	5	0.6		
Kirkland_Main-2001	Kirkland_Manholes-991	230.6	Kirkland_Manholes-993	229.29	112.3	1.17	8	PVC	0.01	762	5	22	27	3.5		
Kirkland_Main-2002	Kirkland_Manholes-993	229.29	Kirkland_Manholes-994	224.8	89	5.04	8	PVC	0.01	1,583	6	26	32	2		
Kirkland_Main-2003	Kirkland_Manholes-996	225.97	Kirkland_Manholes-994	224.8	53	2.21	8	PVC	0.01	1,047	0	4	4	0.4		
Kirkland_Main-2004	Kirkland_Manholes-994	224.8	Kirkland_Manholes-995	224.6	50	0.4	8	PVC	0.01	446	6	35	40	9		
Kirkland_Main-2005	Kirkland_Manholes-995	224.6	Kirkland_Manholes-997	222.3	221.9	1.04	8	PVC	0.01	718	7	39	46	6.4		
Kirkland_Main-2006	Kirkland_Manholes-997	222.3	Kirkland_Manholes-998	220.4	187.6	1.01	8	PVC	0.01	710	7	43	51	7.1		
Kirkland_Main-2007	Kirkland_Manholes-998	220.4	Kirkland_Manholes-980	219.4	152.8	0.65	8	PVC	0.01	570	7	48	55	9.6		
Kirkland_Main-2008	Kirkland_Manholes-980	219.4	Kirkland_Manholes-981	218.7	155.5	0.45	8	PVC	0.01	473	21	117	138	29.1		
Kirkland_Main-2009	Kirkland_Manholes-981	218.7	Kirkland_Manholes-982	217.59	190.8	0.58	8	PVC	0.01	538	33	121	154	28.6		
Kirkland_Main-2010	Kirkland_Manholes-982	217.59	Kirkland_Manholes-983	215.91	138.4	1.21	8	PVC	0.01	777	39	125	165	21.2		
Kirkland_Main-2011	Kirkland_Manholes-983	215.91	Kirkland_Manholes-984	210.71	282.7	1.84	8	PVC	0.01	956	40	130	170	17.8		
Kirkland_Main-2012	Kirkland_Manholes-984	210.71	Kirkland_Manholes-985	205.92	47.8	10.03	8	PVC	0.01	2,232	43	134	177	7.9		
Kirkland_Main-2013	Kirkland_Manholes-1001	230.61	Kirkland_Manholes-1020	226.4	192.3	2.19	8	PVC	0.01	1,043	33	91	124	11.8		
Kirkland_Main-2014	Kirkland_Manholes-1000	240.25	Kirkland_Manholes-1001	230.61	249.9	3.86	8	PVC	0.01	1,385	31	87	118	8.5		
Kirkland_Main-2015	Kirkland_Manholes-999	246.1	Kirkland_Manholes-1000	240.25	246.4	2.37	8	PVC	0.01	1,086	29	82	111	10.3		
Kirkland_Main-2016	Kirkland_Manholes-972	246.27	Kirkland_Manholes-999	246.1	109.4	0.16	8	PVC	0.01	278	29	78	106	38.3		
Kirkland_Main-2017	Kirkland_Manholes-1002	227.29	Kirkland_Manholes-1003	219.05	401.3	2.05	8	PVC	0.01	1,010	2	4	7	0.7		
Kirkland_Main-2018	Kirkland_Manholes-1003	219.05	Kirkland_Manholes-1004	214.11	181.5	2.72	8	PVC	0.01	1,163	4	9	13	1.1		
Kirkland_Main-2019	Kirkland_Manholes-1006	216.58	Kirkland_Manholes-1007	215.09	213.6	0.7	8	PVC	0.01	589	4	9	13	2.2		
Kirkland_Main-2020	Kirkland_Manholes-1005	223.06	Kirkland_Manholes-1006	216.58	398.8	1.63	8	PVC	0.01	899	2	4	6	0.7		
Kirkland_Main-2023	Kirkland_Manholes-1007	215.09	Kirkland_Manholes-1004	214.11	335.8	0.29	8	PVC	0.01	381	6	13	19	5.1		
Kirkland_Main-2024	Kirkland_Manholes-1012	211.42	Kirkland_Manholes-1013	197.72	100.9	13.58	8	PVC	0.01	2,598	2	4	6	0.2		
Kirkland_Main-2025	Kirkland_Manholes-1013	197.72	Kirkland_Manholes-1014	187.16	124	8.52	8	PVC	0.01	2,057	3	9	12	0.6		
Kirkland_Main-2026	Kirkland_Manholes-1014	187.16	Kirkland_Manholes-1015	186.96	99	0.2	8	PVC	0.01	317	3	13	16	5.1		
Kirkland_Main-2027	Kirkland_Manholes-1015	186.96	Kirkland_Manholes-1016	185.35	120.5	1.34	8	PVC	0.01	815	5	17	23	2.8		
Kirkland_Main-2028	Kirkland_Manholes-1016	185.35	Kirkland_Manholes-1036	185.26	143	0.06	8	PVC	0.01	174	8	22	29	16.7		
Kirkland_Main-2029	Kirkland_Manholes-1036	185.26	Kirkland_Manholes-1030	184.08	404.9	0.29	10	PVC	0.01	690	8	26	34	4.9		
Kirkland_Main-2030	Kirkland_Manholes-1030	184.08	Kirkland_Manholes-1031	183.18	286.1	0.31	10	PVC	0.01	717	11	30	41	5.8		
Kirkland_Main-2031	Kirkland_Manholes-1034	183.86	Kirkland_Manholes-1031	183.18	169	0.4	8	PVC	0.01	445	1	4	6	1.2		
Kirkland_Main-2032	Kirkland_Manholes-1031	183.18	Kirkland_Manholes-1035	182.7	151.6	0.32	8	PVC	0.01	397	13	39	52	13.2		
Kirkland_Main-2033	Kirkland_Manholes-1032	177.81	Kirkland_Manholes-1033	173.21	285.6	1.61	8	PVC	0.01	895	4	9	12	1.4		
Kirkland_Main-2034	Kirkland_Manholes-1004	214.11	Kirkland_Manholes-1028	212.78	233.9	0.57	8	PVC	0.01	532	11	26	37	6.9		
Kirkland_Main-2035	Kirkland_Manholes-1009	214.27	Kirkland_Manholes-1008	211.28	293.5	1.02	8	PVC	0.01	712	2	4	7	0.9	SM14-Ex-EX19	
Kirkland_Main-2036	Kirkland_Manholes-1028	212.78	Kirkland_Manholes-1008	211.28	261	0.57	8	PVC	0.01	534	11	30	41	7.7	SM14-Ex-EX19	
Kirkland_Main-2037	Kirkland_Manholes-1008	211.28	Kirkland_Manholes-1029	210.29	108.6	0.91	8	PVC	0.01	673	13	39	52	7.7	SM14-Ex-EX19	
Kirkland_Main-2038	Kirkland_Manholes-1029	210.29	Kirkland_Manholes-1010	207.69	265.5	0.98	8	PVC	0.01	698	13	43	56	8	SM14-Ex-EX19	
Kirkland_Main-2039	Kirkland_Manholes-1010	207.69	Kirkland_Manholes-1017	205.5	77.5	2.83	8	PVC	0.01	1,186	13	48	61	5.1	SM14-Ex-EX19	
Kirkland_Main-2040	Kirkland_Manholes-1022	213.66	Kirkland_Manholes-1023	207.88	245.2	2.36	8	PVC	0.01	1,083	40	112	153	14.1	SM14-Ex-EX18	
Kirkland_Main-2041	Kirkland_Manholes-1023	207.88	Kirkland_Manholes-1017	205.5	153	1.56	8	PVC	0.01	879	43	117	159	18.1	SM14-Ex-EX18	
Kirkland_Main-2042	Kirkland_Manholes-1017	205.5	Kirkland_Manholes-1018	179.75	288.9	8.91	8	PVC	0.01	2,105	56	169	225	10.7	SM14-Ex-EX31	
Kirkland_Main-2043	Kirkland_Manholes-1025	183.2	Kirkland_Manholes-1026	149.27	241.9	14.02	8	PVC	0.01	2,640	3	4	8	0.3		
Kirkland_Main-2044	Kirkland_Manholes-1027	150.87	Kirkland_Manholes-1026	149.27	180	0.89	8	PVC	0.01	665	2	4	6	0.9		
Kirkland_Main-2045	Kirkland_Manholes-1021	230.72	Kirkland_Manholes-1020	230.54	45.4	0.4	8	PVC	0.01	446	3	9	12	2.6	SM14-Ex-EX18	Drop Connection
Kirkland_Main-2046	Kirkland_Manholes-1020	226.4	Kirkland_Manholes-1019	216.75	175.1	5.51	8	PVC	0.01	1,655	37	104	141	8.5	SM14-Ex-EX18	
Kirkland_Main-2047	Kirkland_Manholes-1019	216.75	Kirkland_Manholes-1022	213.66	284.9	1.08	8	PVC	0.01	734	39	108	147	20	SM14-Ex-EX18	
Kirkland_Main-2050	Kirkland_Manholes-1037	180.8	Kirkland_Manholes-1032	177.81	192.3	1.56	8	PVC	0.01	879	2	4	6	0.7		
Kirkland_Main-2051	Kirkland_Manholes-1041	211.62	Kirkland_Manholes-1040	211.16	115.7	0.4	8	PVC	0.01	446	2	4	6	1.4		
Kirkland_Main-2052	Kirkland_Manholes-1040	211.16	Kirkland_Manholes-1039	191.93	181.5	10.59	8	PVC	0.01	2,295	3	9	12	0.5		
Kirkland_Main-2053	Kirkland_Manholes-1039	191.93	Kirkland_Manholes-1038	180.54	235.3	4.84	8	PVC	0.01	1,551	5	13	18	1.1		
Kirkland_Main-2054	Kirkland_Manholes-1038	180.54	Kirkland_Manholes-1042	180.42	296.4	0.04	8	PVC	0.01	140	25	82	108	76.9	SM14-2035-DF6	
Kirkland_Main-2055	Kirkland_Manholes-1045	212.56	Kirkland_Manholes-1044	190.19	362.7	6.17	8	PVC	0.01	1,751	3	4	8	0.4		
Kirkland_Main-2056	Kirkland_Manholes-1044	190.19	Kirkland_Manholes-1043	180.32	106.1	9.3	8	PVC	0.01	2,151	5	9	13	0.6		
Kirkland_Main-2057	Kirkland_Manholes-1042	180.42	Kirkland_Manholes-1043	180.32	14.1	0.71	8	PVC	0.01	594	26	87	113	18.9		
Kirkland_Main-2058	Kirkland_Manholes-1051	183.74	Kirkland_Manholes-1050	181.82	166.3	1.15	8	PVC	0.01	758	77	147	224	29.6		
Kirkland_Main-2059	Kirkland_Manholes-1050	181.82	Kirkland_Manholes-1049	169.63	230.3	5.29	8	PVC	0.01	1,622	85	151	237	14.6		
Kirkland_Main-2060	Kirkland_Manholes-1049	169.63	Kirkland_Manholes-1048	168.86	245.7	0.31	8	PVC	0.01	395	85	156	241	61.1		
Kirkland_Main-2061	Kirkland_Manholes-986	204.38	Kirkland_Manholes-1051	183.74	288.7	7.15	8	PVC	0.01	1,885	75	143	218	11.6		
Kirkland_Main-2062	Kirkland_Manholes-1048	168.86	Kirkland_Manholes-1047	166.5	308.6	0.76	8	PVC	0.01	617	92	160	252	40.9		

2021 (6-year) with Proposed Improvements - Peak Hour Flow - Pipe Capacity Table

Label	Upstream Node	Upstream Invert Elevation (ft)	Downstream Node	Downstream Invert Elevation (ft)	Length (ft)	Slope (%)	Diameter (in)	Material	Manning's n	Design Capacity (gpm)	Domestic Flow (gpm)	I/I Flow (gpm)	Total Flow (gpm)	Percent Full (%)	CIP No.	Notes
Kirkland_Main-2063	Kirkland_Manholes-1047	166.5	Kirkland_Manholes-1046	162.86	368.8	0.99	8	PVC	0.01	700	92	164	256	36.6		
Kirkland_Main-2064	Kirkland_Manholes-1053	228.57	Kirkland_Manholes-1089	214.64	105.1	13.25	8	PVC	0.01	2,566	1	33	34	1.3		
Kirkland_Main-2065	Kirkland_Manholes-1054	235.88	Kirkland_Manholes-1053	228.57	61.2	11.95	8	PVC	0.01	2,437	1	28	29	1.2		
Kirkland_Main-2066	Kirkland_Manholes-1062	265.12	Kirkland_Manholes-1055	254.27	156.2	6.95	8	PVC	0.01	1,858	7	20	27	1.5		
Kirkland_Main-2067	Kirkland_Manholes-1063	275.15	Kirkland_Manholes-1062	265.12	144.2	6.96	8	PVC	0.01	1,860	1	4	5	0.3		
Kirkland_Main-2068	Kirkland_Manholes-1064	278.57	Kirkland_Manholes-1062	265.12	154.9	8.68	8	PVC	0.01	2,078	5	12	17	0.8		
Kirkland_Main-2069	Kirkland_Manholes-1055	254.27	Kirkland_Manholes-1056	242.38	224	5.31	8	PVC	0.01	1,625	8	24	32	2		
Kirkland_Main-2070	Kirkland_Manholes-1056	242.38	Kirkland_Manholes-1057	237.15	108.2	4.83	8	PVC	0.01	1,550	9	28	38	2.4		
Kirkland_Main-2071	Kirkland_Manholes-1057	237.15	Kirkland_Manholes-1058	224.96	136.1	8.96	8	PVC	0.01	2,110	13	45	57	2.7		
Kirkland_Main-2072	Kirkland_Manholes-1059	243.26	Kirkland_Manholes-1057	237.15	201.9	3.03	8	PVC	0.01	1,227	3	12	15	1.2		
Kirkland_Main-2073	Kirkland_Manholes-1061	271.51	Kirkland_Manholes-1060	252.96	148.5	12.49	8	PVC	0.01	2,492	1	4	5	0.2		
Kirkland_Main-2074	Kirkland_Manholes-1060	252.96	Kirkland_Manholes-1059	243.26	83.7	11.58	8	PVC	0.01	2,400	2	8	10	0.4		
Kirkland_Main-2075	Kirkland_Manholes-1103	198.97	Kirkland_Manholes-1101	197.04	31	6.23	18	PVC	0.01	15,303	657	2,120	2,777	18.1		
Kirkland_Main-2076	Kirkland_Manholes-1102	199.75	Kirkland_Manholes-1101	197.04	30.1	8.99	8	PVC	0.01	2,114	3	41	44	2.1		
Kirkland_Main-2077	Kirkland_Manholes-1100	201.72	Kirkland_Manholes-1102	199.75	337.5	0.58	8	PVC	0.01	539	2	37	38	7.1		
Kirkland_Main-2078	Kirkland_Manholes-1093	203.29	Kirkland_Manholes-1100	201.72	272.4	0.58	8	PVC	0.01	535	0	33	33	6.1		
Kirkland_Main-2079	Kirkland_Manholes-1095	206.07	Kirkland_Manholes-1094	204.22	102	1.81	8	PVC	0.01	950	0	4	4	0.5		
Kirkland_Main-2080	Kirkland_Manholes-1094	204.22	Kirkland_Manholes-1093	203.29	43.7	2.13	8	PVC	0.01	1,028	0	8	8	0.8		
Kirkland_Main-2081	Kirkland_Manholes-1096	204.27	Kirkland_Manholes-1093	203.29	162.1	0.6	8	PVC	0.01	548	0	20	20	3.7		
Kirkland_Main-2082	Kirkland_Manholes-1098	205.6	Kirkland_Manholes-1097	204.86	78.1	0.95	8	PVC	0.01	686	0	4	4	0.6		
Kirkland_Main-2083	Kirkland_Manholes-1097	204.86	Kirkland_Manholes-1096	204.27	167.5	0.35	8	PVC	0.01	418	0	16	16	3.9		
Kirkland_Main-2084	Kirkland_Manholes-1099	211.44	Kirkland_Manholes-1097	204.86	308.5	2.13	8	PVC	0.01	1,030	0	8	8	0.8		
Kirkland_Main-2085	Kirkland_Manholes-1079	238.18	Kirkland_Manholes-1080	229.14	134.4	6.73	8	PVC	0.01	1,829	1	4	5	0.3		
Kirkland_Main-2086	Kirkland_Manholes-1080	229.14	Kirkland_Manholes-1081	226.1	255.6	1.19	8	PVC	0.01	769	73	264	337	43.8		
Kirkland_Main-2087	Kirkland_Manholes-1082	233.35	Kirkland_Manholes-1081	226.1	142.6	5.08	8	PVC	0.01	1,590	2	4	6	0.4		
Kirkland_Main-2088	Kirkland_Manholes-1081	226.1	Kirkland_Manholes-1070	224.89	260.5	0.46	8	PVC	0.01	481	74	273	347	72.2	SM14-2035-DF7	
Kirkland_Main-2089	Kirkland_Manholes-1069	247.48	Kirkland_Manholes-1070	224.89	321.6	7.02	8	PVC	0.01	1,869	73	232	482	25.8		
Kirkland_Main-2090	Kirkland_Manholes-1067	259.57	Kirkland_Manholes-1069	247.48	126	9.6	8	PVC	0.01	2,184	68	216	460	21.1		
Kirkland_Main-2091	Kirkland_Manholes-1071	277.81	Kirkland_Manholes-1067	259.57	242.2	7.53	8	PVC	0.01	1,935	17	61	78	4		
Kirkland_Main-2092	Kirkland_Manholes-1072	288.83	Kirkland_Manholes-1071	277.81	139.9	7.88	8	PVC	0.01	1,979	8	20	28	1.4		
Kirkland_Main-2093	Kirkland_Manholes-1077	252.59	Kirkland_Manholes-1069	247.48	346.5	1.47	8	PVC	0.01	856	4	12	16	1.9		
Kirkland_Main-2094	Kirkland_Manholes-1078	305.14	Kirkland_Manholes-1073	302.05	162.4	1.9	8	PVC	0.01	973	3	8	11	1.2		
Kirkland_Main-2095	Kirkland_Manholes-1073	302.05	Kirkland_Manholes-1072	288.83	375.1	3.52	8	PVC	0.01	1,324	7	16	23	1.7		
Kirkland_Main-2096	Kirkland_Manholes-1074	295.05	Kirkland_Manholes-1075	291.84	155.4	2.07	8	PVC	0.01	1,013	47	130	354	34.9		
Kirkland_Main-2097	Kirkland_Manholes-1076	298.68	Kirkland_Manholes-1074	295.05	108.2	3.36	8	PVC	0.01	1,291	47	126	349	27		
Kirkland_Main-2098	Kirkland_Manholes-1068	279.38	Kirkland_Manholes-1066	278.91	39.6	1.19	8	PVC	0.01	768	50	142	369	48		
Kirkland_Main-2099	Kirkland_Manholes-1066	278.91	Kirkland_Manholes-1065	260.88	143.1	12.6	8	PVC	0.01	2,502	50	146	373	14.9		
Kirkland_Main-2100	Kirkland_Manholes-1065	260.88	Kirkland_Manholes-1067	259.57	130	1.01	8	PVC	0.01	708	51	151	377	53.3		
Kirkland_Main-2101	Kirkland_Manholes-1090	254.86	Kirkland_Manholes-1091	251.69	82.2	3.86	8	PVC	0.01	1,385	1	16	17	1.2		
Kirkland_Main-2102	Kirkland_Manholes-1091	251.69	Kirkland_Manholes-1092	246.51	140.9	3.68	8	PVC	0.01	1,352	1	20	21	1.6		
Kirkland_Main-2103	Kirkland_Manholes-1092	246.51	Kirkland_Manholes-1054	235.88	141.8	7.5	8	PVC	0.01	1,931	1	24	25	1.3		
Kirkland_Main-2104	Kirkland_Manholes-1089	214.64	Kirkland_Manholes-1086	198.2	276	5.96	8	PVC	0.01	1,721	1	37	38	2.2		
Kirkland_Main-2105	Kirkland_Manholes-1088	203.98	Kirkland_Manholes-1087	203.79	103.7	0.19	8	PVC	0.01	306	5	4	9	3		
Kirkland_Main-2106	Kirkland_Manholes-1087	203.79	Kirkland_Manholes-1086	198.2	55.1	10.14	8	PVC	0.01	2,245	5	8	13	0.6		
Kirkland_Main-2107	Kirkland_Manholes-1070	224.89	Kirkland_Manholes-1083	220.88	227.5	1.76	12	PVC	0.01	2,760	149	509	834	30.2	SM14-Ex-EX321	
Kirkland_Main-2108	Kirkland_Manholes-2996	220.63	Kirkland_Manholes-1084	206.2	323.5	4.46	8	PVC	0.01	1,489	159	521	856	57.5		
Kirkland_Main-2109	Kirkland_Manholes-1058	224.96	Kirkland_Manholes-1084	206.2	342.8	5.47	8	PVC	0.01	1,649	13	49	62	3.8		
Kirkland_Main-2110	Kirkland_Manholes-1084	206.2	Kirkland_Manholes-1085	204.43	46.9	3.78	8	PVC	0.01	1,370	173	574	923	67.4		
Kirkland_Main-2111	Kirkland_Manholes-1101	197.04	Kirkland_Manholes-1104	196.79	207.5	0.12	24	PVC	0.01	4,572	660	2,165	2,825	61.8	SM14-Ex-EX22	
Kirkland_Main-2112	Kirkland_Manholes-1112	179.44	Kirkland_Manholes-1124	177.02	214.1	1.13	15	PVC	0.01	4,007	66	33	98	2.5		
Kirkland_Main-2113	Kirkland_Manholes-1113	180.6	Kirkland_Manholes-1112	179.44	131.8	0.88	15	PVC	0.01	3,535	57	24	81	2.3		
Kirkland_Main-2114	Kirkland_Manholes-1117	196.58	Kirkland_Manholes-1115	186.39	163.3	6.24	15	PVC	0.01	9,416	21	12	33	0.3		
Kirkland_Main-2115	Kirkland_Manholes-1116	180.36	Kirkland_Manholes-1112	179.44	120	0.77	8	PVC	0.01	617	4	4	8	1.3		
Kirkland_Main-2116	Kirkland_Manholes-1119	159.49	Kirkland_Manholes-1120	158.13	217.8	0.62	8	PVC	0.01	557	29	6	34	6.2		
Kirkland_Main-2117	Kirkland_Manholes-1126	164.51	Kirkland_Manholes-1127	163.92	310.2	0.19	24	PVC	0.01	5,757	331	700	1,207	21	SM14-Ex-EX4	
Kirkland_Main-2118	Kirkland_Manholes-1134	223.76	Kirkland_Manholes-1131	191.56	280.1	11.49	8	PVC	0.01	2,390	14	24	37	1.6	SM14-Ex-EX63	
Kirkland_Main-2119	Kirkland_Manholes-1137	231.81	Kirkland_Manholes-1135	210.01	166.8	13.07	8	PVC	0.01	2,549	2	4	6	0.2	SM14-Ex-EX81	
Kirkland_Main-2120	Kirkland_Manholes-1135	210.01	Kirkland_Manholes-1131	191.56	334.9	5.51	8	PVC	0.01	1,655	2	13	15	0.9	SM14-Ex-EX81	
Kirkland_Main-2121	Kirkland_Manholes-1136	213.62	Kirkland_Manholes-1135	210.01	85.6	4.22	8	PVC	0.01	1,448	0	4	4	0.3	SM14-Ex-EX81	
Kirkland_Main-2122	Kirkland_Manholes-680	257.67	Kirkland_Manholes-679	257.45	31.1	0.71	8	PVC	0.01	593	22	24	46	7.8		
Kirkland_Main-2123	Kirkland_Manholes-679	257.45	Kirkland_Manholes-681	256.89	146.9	0.38	8	PVC	0.01	435	22	33	55	12.6		
Kirkland_Main-2124	Kirkland_Manholes-678	266.88	Kirkland_Manholes-679	257.45	86.2	10.93	8	PVC	0.01	2,331	0	4	4	0.2		

2021 (6-year) with Proposed Improvements - Peak Hour Flow - Pipe Capacity Table

Label	Upstream Node	Upstream Invert Elevation (ft)	Downstream Node	Downstream Invert Elevation (ft)	Length (ft)	Slope (%)	Diameter (in)	Material	Manning's n	Design Capacity (gpm)	Domestic Flow (gpm)	I/I Flow (gpm)	Total Flow (gpm)	Percent Full (%)	CIP No.	Notes
Kirkland_Main-2125	Kirkland_Manholes-682	258.64	Kirkland_Manholes-680	257.67	223	0.44	8	PVC	0.01	465	1	20	21	4.6		
Kirkland_Main-2126	Kirkland_Manholes-685	255.36	Kirkland_Manholes-1888	254.12	288.3	0.43	8	PVC	0.01	462	24	45	69	14.9		
Kirkland_Main-2127	Kirkland_Manholes-684	256.25	Kirkland_Manholes-685	255.36	200.3	0.44	8	PVC	0.01	469	22	41	63	13.4		
Kirkland_Main-2128	Kirkland_Manholes-1740	35.99	Kirkland_Manholes-1743	28.04	156.8	5.07	10	PVC	0.01	2,878	324	560	885	30.7		
Kirkland_Main-2129	Kirkland_Manholes-1757	18.99	Kirkland_Manholes-1756	15.01	53.7	7.42	8	PVC	0.01	1,920	6	6	12	0.6	SM14-Ex-EX183	
Kirkland_Main-2130	Kirkland_Manholes-1756	15.01	Kirkland_Manholes-1758	14.89	54.1	0.21	12	PVC	0.01	959	65	19	85	8.8	SM14-Ex-EX183	
Kirkland_Main-2131	Kirkland_Manholes-1758	14.89	Kirkland_Manholes-1759	14.76	60.8	0.23	12	PVC	0.01	991	68	26	94	9.5	SM14-Ex-EX183	
Kirkland_Main-2132	Kirkland_Manholes-1759	14.76	Kirkland_Manholes-1789	14.67	38.9	0.21	12	PVC	0.01	957	68	32	101	10.5	SM14-Ex-EX183	
Kirkland_Main-2133	Kirkland_Manholes-2067	19	Kirkland_Manholes-1756	15.01	217.5	1.84	12	PVC	0.01	2,816	52	6	59	2.1	SM14-Ex-EX183	
Kirkland_Main-2134	Kirkland_Manholes-2305	15.26	Kirkland_Manholes-1755	15.12	124.7	0.11	21	PVC	0.01	3,097	336	676	1,012	32.7		
Kirkland_Main-2135	Kirkland_Manholes-1755	15.12	Kirkland_Manholes-1753	14.83	381.1	0.08	21	PVC	0.01	2,550	336	682	1,018	39.9		
Kirkland_Main-2136	Kirkland_Manholes-1753	14.83	Kirkland_Manholes-1754	14.75	34.9	0.23	21	PVC	0.01	4,426	343	689	1,031	23.3		
Kirkland_Main-2137	Kirkland_Manholes-1754	14.75	Kirkland_Manholes-1789	14.67	165.1	0.05	21	PVC	0.01	2,035	350	695	1,045	51.3		
Kirkland_Main-2138	Kirkland_Manholes-1692	35.9	Kirkland_Manholes-736	28.45	107.1	6.96	8	PVC	0.01	1,860	76	272	348	18.7	SM14-Ex-EX96	
Kirkland_Main-2139	Kirkland_Manholes-1694	44.12	Kirkland_Manholes-1692	35.9	116.3	7.07	8	PVC	0.01	1,874	72	255	328	17.5	SM14-Ex-EX96	
Kirkland_Main-2140	Kirkland_Manholes-1701	49.81	Kirkland_Manholes-1694	44.12	274.3	2.07	8	PVC	0.01	1,016	8	16	25	2.5	SM14-Ex-EX152	
Kirkland_Main-2141	Kirkland_Manholes-1702	82.31	Kirkland_Manholes-1701	49.81	296.4	10.96	8	PVC	0.01	2,335	1	8	9	0.4	SM14-Ex-EX152	
Kirkland_Main-2142	Kirkland_Manholes-1698	89.68	Kirkland_Manholes-1697	68.77	247.3	8.45	8	PVC	0.01	2,050	1	8	10	0.5	SM14-Ex-EX151	
Kirkland_Main-2143	Kirkland_Manholes-1697	68.77	Kirkland_Manholes-1696	58.41	181	5.72	8	PVC	0.01	1,687	8	16	24	1.5	SM14-Ex-EX151	
Kirkland_Main-2144	Kirkland_Manholes-614	87.89	Kirkland_Manholes-1696	58.41	277.2	10.64	8	PVC	0.01	2,299	51	198	248	10.8	SM14-Ex-EX96	
Kirkland_Main-2145	Kirkland_Manholes-2025	477	Kirkland_Manholes-2024	470.6	42.9	14.92	8	PVC	0.01	2,724	8	12	20	0.7		
Kirkland_Main-2146	Kirkland_Manholes-2024	470.6	Kirkland_Manholes-2023	466.76	120.1	3.2	8	PVC	0.01	1,261	8	16	25	2		
Kirkland_Main-2147	Kirkland_Manholes-2019	467.83	Kirkland_Manholes-2022	466	273.9	0.67	10	PVC	0.01	1,045	121	252	373	35.7		
Kirkland_Main-2148	Kirkland_Manholes-2028	481.27	Kirkland_Manholes-2026	474.59	90.6	7.37	8	PVC	0.01	1,914	2	4	6	0.3		
Kirkland_Main-2149	Kirkland_Manholes-2029	479.06	Kirkland_Manholes-2027	477.1	283.3	0.69	8	PVC	0.01	586	25	77	103	17.5		
Kirkland_Main-2150	Kirkland_Manholes-2027	477.1	Kirkland_Manholes-2026	474.59	76.4	3.29	8	PVC	0.01	1,278	27	81	108	8.5		
Kirkland_Main-2151	Kirkland_Manholes-2026	474.59	Kirkland_Manholes-2021	473.17	135.7	1.05	8	PVC	0.01	721	29	90	118	16.4		
Kirkland_Main-2152	Kirkland_Manholes-2033	462.47	Kirkland_Manholes-2034	462.21	16.1	1.61	8	PVC	0.01	896	1	4	5	0.6		
Kirkland_Main-2153	Kirkland_Manholes-2034	462.21	Kirkland_Manholes-2032	461.07	176.2	0.65	8	PVC	0.01	567	1	8	10	1.7		Drop Connection
Kirkland_Main-2154	Kirkland_Manholes-2031	464.09	Kirkland_Manholes-2032	458.97	79	6.48	8	PVC	0.01	1,795	133	289	422	23.5	SM14-Ex-EX264	
Kirkland_Main-2155	Kirkland_Manholes-2030	465.11	Kirkland_Manholes-2031	464.09	197.9	0.52	10	PVC	0.01	918	133	285	418	45.5		
Kirkland_Main-2156	Kirkland_Manholes-2022	466	Kirkland_Manholes-2030	465.11	389.3	0.23	10	PVC	0.01	611	131	277	407	66.6		
Kirkland_Main-2157	Kirkland_Manholes-2035	454.4	Kirkland_Manholes-2036	452.58	173.2	1.05	8	PVC	0.01	723	137	305	442	61.2	SM14-Ex-EX264	
Kirkland_Main-2158	Kirkland_Manholes-2032	458.97	Kirkland_Manholes-2035	454.4	196.5	2.33	8	PVC	0.01	1,075	136	301	437	40.6	SM14-Ex-EX264	
Kirkland_Main-2159	Kirkland_Manholes-2039	480.14	Kirkland_Manholes-2040	475.69	137	3.25	8	PVC	0.01	1,271	6	8	14	1.1	SM14-Ex-EX266	
Kirkland_Main-2160	Kirkland_Manholes-2038	484.4	Kirkland_Manholes-2039	480.14	188.8	2.26	8	PVC	0.01	1,059	1	4	5	0.5	SM14-Ex-EX266	
Kirkland_Main-2161	Kirkland_Manholes-2040	475.69	Kirkland_Manholes-2037	465.67	362.6	2.76	8	PVC	0.01	1,172	8	12	21	1.8	SM14-Ex-EX266	
Kirkland_Main-2162	Kirkland_Manholes-2672	373.35	Kirkland_Manholes-2674	354.77	247.9	7.5	8	PVC	0.01	1,930	17	81	99	5.1	SM14-Ex-EX209	
Kirkland_Main-2163	Kirkland_Manholes-2671	399.75	Kirkland_Manholes-2672	373.35	240.8	10.97	8	PVC	0.01	2,335	16	77	94	4	SM14-Ex-EX209	
Kirkland_Main-2164	Kirkland_Manholes-2674	354.77	Kirkland_Manholes-2300	337.19	208.1	8.45	8	PVC	0.01	2,049	18	85	104	5.1	SM14-Ex-EX209	
Kirkland_Main-2165	Kirkland_Manholes-2678	335.2	Kirkland_Manholes-2681	334.86	198.8	0.17	12	PVC	0.01	860	44	171	215	25	SM14-Ex-EX206	
Kirkland_Main-2166	Kirkland_Manholes-2680	361.93	Kirkland_Manholes-2678	335.2	358.9	7.45	8	PVC	0.01	1,924	3	4	8	0.4		
Kirkland_Main-2167	Kirkland_Manholes-2677	336.2	Kirkland_Manholes-2678	335.2	208.7	0.48	12	PVC	0.01	1,439	40	163	203	14.1	SM14-Ex-EX206	
Kirkland_Main-2168	Kirkland_Manholes-2676	336.73	Kirkland_Manholes-2677	336.2	133.1	0.4	12	PVC	0.01	1,317	40	159	199	15.1	SM14-Ex-EX206	
Kirkland_Main-2169	Kirkland_Manholes-2675	350.82	Kirkland_Manholes-2676	336.73	223.6	6.3	8	PVC	0.01	1,770	4	8	12	0.7	SM14-Ex-EX208	
Kirkland_Main-2170	Kirkland_Manholes-2300	337.19	Kirkland_Manholes-2676	336.73	113.6	0.4	12	PVC	0.01	1,317	36	146	182	13.8	SM14-Ex-EX206	
Kirkland_Main-2171	Kirkland_Manholes-2697	234.26	Kirkland_Manholes-2245	234.09	42.8	0.4	8	PVC	0.01	444	2	4	6	1.3		
Kirkland_Main-2173	Kirkland_Manholes-2682	228.77	Kirkland_Manholes-2685	228.01	128.4	0.59	8	PVC	0.01	542	5	12	17	3.2	SM14-Ex-EX201	
Kirkland_Main-2174	Kirkland_Manholes-2683	239.58	Kirkland_Manholes-2682	228.77	368.9	2.93	8	PVC	0.01	1,207	3	8	11	0.9		
Kirkland_Main-2175	Kirkland_Manholes-2684	244.68	Kirkland_Manholes-2683	239.58	150.1	3.4	8	PVC	0.01	1,300	1	4	5	0.4		
Kirkland_Main-2176	Kirkland_Manholes-2685	228.01	Kirkland_Manholes-2686	221.84	249.2	2.48	8	PVC	0.01	1,109	6	16	22	2	SM14-Ex-EX201	
Kirkland_Main-2177	Kirkland_Manholes-2311	256.52	Kirkland_Manholes-2310	256	129.9	0.4	8	PVC	0.01	446	5	13	18	4.1		
Kirkland_Main-2178	Kirkland_Manholes-2688	231.59	Kirkland_Manholes-2687	227.79	162.1	2.34	8	PVC	0.01	1,080	3	8	11	1.1		
Kirkland_Main-2179	Kirkland_Manholes-2687	227.79	Kirkland_Manholes-2686	221.84	261.7	2.27	8	PVC	0.01	1,063	5	12	17	1.6		
Kirkland_Main-2180	Kirkland_Manholes-2689	235.04	Kirkland_Manholes-2688	231.59	174.6	1.98	8	PVC	0.01	991	2	4	6	0.6		
Kirkland_Main-2184	Kirkland_Manholes-2691	211.09	Kirkland_Manholes-2692	205.03	238.4	2.54	8	PVC	0.01	1,124	13	41	54	4.8	SM14-Ex-EX201	
Kirkland_Main-2185	Kirkland_Manholes-2692	205.03	Kirkland_Manholes-2693	198.67	215	2.96	8	PVC	0.01	1,213	14	45	59	4.8	SM14-Ex-EX201	
Kirkland_Main-2186	Kirkland_Manholes-2693	198.67	Kirkland_Manholes-2694	189.1	61.3	15.61	8	PVC	0.01	2,785	14	49	63	2.3	SM14-Ex-EX201	
Kirkland_Main-2187	Kirkland_Manholes-2695	190.38	Kirkland_Manholes-2694	189.1	280.3	0.46	8	PVC	0.01	476	0	4	4	0.9	SM14-Ex-EX201	
Kirkland_Main-2188	Kirkland_Manholes-2694	189.1	Kirkland_Manholes-2698	186.34	272.4	1.01	8	PVC	0.01	710	15	57	72	10.1	SM14-Ex-EX198	
Kirkland_Main-2189	Kirkland_Manholes-2701	219.11	Kirkland_Manholes-2700	212.52	304.2	2.17	8	PVC	0.01	1,038	10	57	67	6.4		
Kirkland_Main-2190	Kirkland_Manholes-2700	212.52	Kirkland_Manholes-2699	190.07	286.1	7.85	8	PVC	0.01	1,975	11	61	72	3.7	SM14-Ex-EX202	

2021 (6-year) with Proposed Improvements - Peak Hour Flow - Pipe Capacity Table

Label	Upstream Node	Upstream Invert Elevation (ft)	Downstream Node	Downstream Invert Elevation (ft)	Length (ft)	Slope (%)	Diameter (in)	Material	Manning's n	Design Capacity (gpm)	Domestic Flow (gpm)	I/I Flow (gpm)	Total Flow (gpm)	Percent Full (%)	CIP No.	Notes
Kirkland_Main-2191	Kirkland_Manholes-2699	190.07	Kirkland_Manholes-2696	172.94	342.2	5.01	8	PVC	0.01	1,578	12	65	77	4.9	SM14-Ex-EX202	
Kirkland_Main-2192	Kirkland_Manholes-2706	252.55	Kirkland_Manholes-2704	250.11	196.5	1.24	8	PVC	0.01	786	0	4	4	0.6		
Kirkland_Main-2193	Kirkland_Manholes-2704	250.11	Kirkland_Manholes-2705	234.07	107.2	14.96	8	PVC	0.01	2,727	7	49	56	2.1		
Kirkland_Main-2194	Kirkland_Manholes-2705	234.07	Kirkland_Manholes-2701	219.11	291.8	5.13	8	PVC	0.01	1,596	9	53	62	3.9		
Kirkland_Main-2195	Kirkland_Manholes-2710	293.33	Kirkland_Manholes-2709	292.14	31.4	3.79	8	PVC	0.01	1,373	0	4	4	0.3		
Kirkland_Main-2197	Kirkland_Manholes-501	145.5	Kirkland_Manholes-502	134.98	294	3.58	8	PVC	0.01	1,334	1	8	9	0.7	SM10	
Kirkland_Main-2198	Kirkland_Manholes-502	134.98	Kirkland_Manholes-1158	124.93	261.4	3.85	8	PVC	0.01	1,383	3	16	20	1.4	SM10	
Kirkland_Main-2199	Kirkland_Manholes-1178	142.08	Kirkland_Manholes-1179	123.76	339.2	5.4	8	PVC	0.01	1,639	6	25	31	1.9	SM10	
Kirkland_Main-2200	Kirkland_Manholes-1177	164.29	Kirkland_Manholes-1178	142.08	352.7	6.3	8	PVC	0.01	1,769	3	16	20	1.1	SM10	
Kirkland_Main-2201	Kirkland_Manholes-1176	174.14	Kirkland_Manholes-1177	164.29	198.1	4.97	8	PVC	0.01	1,572	1	8	9	0.6	SM10	
Kirkland_Main-2202	Kirkland_Manholes-1174	178.7	Kirkland_Manholes-1173	177.85	211.5	0.4	8	PVC	0.01	446	2	8	10	2.3	SM10	Drop Connection
Kirkland_Main-2203	Kirkland_Manholes-1175	174.04	Kirkland_Manholes-1173	166.52	399.1	1.88	8	PVC	0.01	968	2	8	10	1.1	SM10	
Kirkland_Main-2204	Kirkland_Manholes-1173	166.52	Kirkland_Manholes-1172	164.12	183.3	1.31	8	PVC	0.01	807	7	25	32	3.9	SM10	
Kirkland_Main-2205	Kirkland_Manholes-1172	164.12	Kirkland_Manholes-1171	160.49	157.6	2.3	8	PVC	0.01	1,070	8	33	41	3.8	SM14-Ex-EX79	
Kirkland_Main-2206	Kirkland_Manholes-2890	82	Kirkland_Manholes-1162	78.51	88.5	3.95	8	PVC	0.01	1,400	0	8	359	25.6	SM14-Ex-EX77	
Kirkland_Main-2207	Kirkland_Manholes-514	18.19	Kirkland_Manholes-2958	17.19	133.7	0.75	8	PVC	0.01	610	34	212	246	40.3	SM14-Ex-EX37	
Kirkland_Main-2208	Kirkland_Manholes-493	145.66	Kirkland_Manholes-3107	127.14	403.7	4.59	8	PVC	0.01	1,510	2	8	10	0.7	SM10	
Kirkland_Main-2209	Kirkland_Manholes-496	188.94	Kirkland_Manholes-495	169.48	399.8	4.87	8	PVC	0.01	1,555	2	8	10	0.6	SM10	
Kirkland_Main-2210	Kirkland_Manholes-497	188.11	Kirkland_Manholes-499	185.94	314.9	0.69	8	PVC	0.01	585	18	58	75	12.9	SM10	
Kirkland_Main-2211	Kirkland_Manholes-498	190.16	Kirkland_Manholes-499	185.94	340.1	1.24	8	PVC	0.01	785	4	8	12	1.5	SM10	
Kirkland_Main-2213	Kirkland_Manholes-510	78.8	Kirkland_Manholes-509	76.43	10.6	22.33	15	PVC	0.01	17,810	6	41	47	0.3		
Kirkland_Main-2214	Kirkland_Manholes-513	81.7	Kirkland_Manholes-512	79.85	46	4.02	12	PVC	0.01	4,168	23	157	180	4.3	SM14-Ex-EX76	
Kirkland_Main-2215	Kirkland_Manholes-1825	112.27	Kirkland_Manholes-508	102	349.6	2.94	8	PVC	0.01	1,208	4	16	21	1.7	SM10	
Kirkland_Main-2216	Kirkland_Manholes-508	102	Kirkland_Manholes-507	100.47	381.8	0.4	8	PVC	0.01	446	6	25	31	6.9	SM10	Drop Connection
Kirkland_Main-2217	Kirkland_Manholes-507	85.74	Kirkland_Manholes-506	75.41	39.4	26.19	8	PVC	0.01	3,608	6	33	39	1.1		
Kirkland_Main-2218	Kirkland_Manholes-506	75.41	Kirkland_Manholes-505	74.06	314	0.43	15	PVC	0.01	2,471	101	593	1,045	42.3		
Kirkland_Main-2221	Kirkland_Manholes-505	74.06	Kirkland_Manholes-1824	72.16	261.9	0.73	15	PVC	0.01	3,210	102	602	1,054	32.8		
Kirkland_Main-2222	Kirkland_Manholes-509	76.43	Kirkland_Manholes-506	75.41	337.6	0.3	15	PVC	0.01	2,072	95	552	998	48.2		
Kirkland_Main-2224	Kirkland_Manholes-1160	77.11	Kirkland_Manholes-509	76.43	266.4	0.26	15	PVC	0.01	1,904	90	503	943	49.5		
Kirkland_Main-2225	Kirkland_Manholes-511	79.24	Kirkland_Manholes-1161	78.67	198.1	0.29	15	PVC	0.01	2,022	24	173	197	9.8		
Kirkland_Main-2226	Kirkland_Manholes-512	79.85	Kirkland_Manholes-511	79.24	306.1	0.2	15	PVC	0.01	1,683	24	165	189	11.2		
Kirkland_Main-2228	Kirkland_Manholes-1533	294.07	Kirkland_Manholes-1532	269.21	121	20.55	8	PVC	0.01	3,196	2	12	14	0.4	SM14-Ex-EX126	
Kirkland_Main-2229	Kirkland_Manholes-1532	269.21	Kirkland_Manholes-1531	265.03	88.5	4.72	8	PVC	0.01	1,532	2	16	19	1.2	SM14-Ex-EX126	
Kirkland_Main-2230	Kirkland_Manholes-1211	186.99	Kirkland_Manholes-1197	181.82	133.6	3.87	8		0.012	1,156	4	33	37	3.2		
Kirkland_Main-2231	Kirkland_Manholes-1531	265.03	Kirkland_Manholes-1530	229.92	439.6	7.99	8	PVC	0.01	1,992	11	28	40	2	SM14-Ex-EX125	
Kirkland_Main-2232	Kirkland_Manholes-1530	229.92	Kirkland_Manholes-1529	223.45	269.7	2.4	8	PVC	0.01	1,092	38	110	147	13.5	SM14-Ex-EX121	
Kirkland_Main-2233	Kirkland_Manholes-1529	223.45	Kirkland_Manholes-1528	217.87	160.3	3.48	8	PVC	0.01	1,316	40	114	154	11.7	SM14-Ex-EX121	
Kirkland_Main-2235	Kirkland_Manholes-1249	223.25	Kirkland_Manholes-1250	210.15	250.9	5.22	8	PVC	0.01	1,611	17	99	116	7.2	SM14-Ex-EX65	
Kirkland_Main-2236	Kirkland_Manholes-1246	238.47	Kirkland_Manholes-1247	236.99	105.6	1.4	8	PVC	0.01	835	12	58	70	8.4	SM14-Ex-EX65	
Kirkland_Main-2237	Kirkland_Manholes-1248	254.12	Kirkland_Manholes-1247	236.99	222.2	7.71	8	PVC	0.01	1,958	1	8	10	0.5	SM14-Ex-EX97	
Kirkland_Main-2238	Kirkland_Manholes-1245	243.41	Kirkland_Manholes-1246	238.47	272.7	1.81	8	PVC	0.01	949	11	49	60	6.3	SM14-Ex-EX65	
Kirkland_Main-2239	Kirkland_Manholes-1244	254.14	Kirkland_Manholes-1245	243.41	231.8	4.63	8	PVC	0.01	1,517	2	8	10	0.7	SM14-Ex-EX65	
Kirkland_Main-2240	Kirkland_Manholes-1242	244.28	Kirkland_Manholes-208	241.09	154	2.07	8	PVC	0.01	1,015	3	9	11	1.1	SM14-Ex-EX61	
Kirkland_Main-2241	Kirkland_Manholes-1237	263.8	Kirkland_Manholes-1236	256.67	250.6	2.84	8	PVC	0.01	1,189	1	4	5	0.5	SM14-Ex-EX60	
Kirkland_Main-2242	Kirkland_Manholes-1239	270.66	Kirkland_Manholes-1238	263.26	225.6	3.28	8	PVC	0.01	1,277	3	8	12	0.9	SM14-Ex-EX95	
Kirkland_Main-2244	Kirkland_Manholes-1234	275.2	Kirkland_Manholes-1233	274.4	31.3	2.55	8	PVC	0.01	1,127	1	8	10	0.9	SM14-Ex-EX96	
Kirkland_Main-2245	Kirkland_Manholes-1233	274.4	Kirkland_Manholes-1232	271.55	317	0.9	8	PVC	0.01	669	6	25	31	4.6	SM14-Ex-EX96	
Kirkland_Main-2246	Kirkland_Manholes-1232	271.55	Kirkland_Manholes-1231	254.08	347.6	5.03	8	PVC	0.01	1,581	9	33	42	2.6	SM14-Ex-EX96	
Kirkland_Main-2247	Kirkland_Manholes-1231	254.08	Kirkland_Manholes-1230	236.32	352.2	5.04	8	PVC	0.01	1,583	13	41	54	3.4	SM14-Ex-EX96	
Kirkland_Main-2248	Kirkland_Manholes-1414	476.69	Kirkland_Manholes-1415	475.19	382.9	0.39	8	PVC	0.01	441	2	20	22	5		
Kirkland_Main-2249	Kirkland_Manholes-1416	475.58	Kirkland_Manholes-1415	475.19	141	0.28	8	PVC	0.01	371	4	20	24	6.5		
Kirkland_Main-2250	Kirkland_Manholes-1417	477.64	Kirkland_Manholes-1416	475.58	44.3	4.65	8	PVC	0.01	1,521	3	16	19	1.3		
Kirkland_Main-2251	Kirkland_Manholes-1419	480.31	Kirkland_Manholes-1418	477.42	188.2	1.54	8	PVC	0.01	874	2	12	14	1.6		
Kirkland_Main-2252	Kirkland_Manholes-1420	487.42	Kirkland_Manholes-1419	480.31	251.4	2.83	8	PVC	0.01	1,186	1	8	9	0.8		
Kirkland_Main-2253	Kirkland_Manholes-1421	490.08	Kirkland_Manholes-1420	487.42	280.7	0.95	8	PVC	0.01	686	0	4	4	0.6		
Kirkland_Main-2255	Kirkland_Manholes-1422	436.01	Kirkland_Manholes-1423	431.09	115.7	4.25	8	PVC	0.01	1,454	4	3	7	0.5		
Kirkland_Main-2256	Kirkland_Manholes-1423	431.09	Kirkland_Manholes-1424	424.73	75.1	8.47	8	PVC	0.01	2,052	6	6	12	0.6		
Kirkland_Main-2257	Kirkland_Manholes-1424	424.73	Kirkland_Manholes-1425	416.33	120.8	6.95	8	PVC	0.01	1,859	7	9	16	0.9		
Kirkland_Main-2258	Kirkland_Manholes-1425	416.33	Kirkland_Manholes-2514	400.04	156.3	10.42	8	PVC	0.01	2,276	9	12	21	0.9		
Kirkland_Main-2260	Kirkland_Manholes-1426	513.73	Kirkland_Manholes-1427	513.21	150.6	0.34	8	PVC	0.01	413	2	4	7	1.6		
Kirkland_Main-2261	Kirkland_Manholes-2186	104.5	Kirkland_Manholes-2185	103.23	40.6	3.13	8	PVC	0.01	1,248	23	41	64	5.2		
Kirkland_Main-2262	Kirkland_Manholes-2188	116.01	Kirkland_Manholes-2187	114.37	29.7	5.52	8	PVC	0.01	1,657	1	8	9	0.5		

2021 (6-year) with Proposed Improvements - Peak Hour Flow - Pipe Capacity Table

Label	Upstream Node	Upstream Invert Elevation (ft)	Downstream Node	Downstream Invert Elevation (ft)	Length (ft)	Slope (%)	Diameter (in)	Material	Manning's n	Design Capacity (gpm)	Domestic Flow (gpm)	I/I Flow (gpm)	Total Flow (gpm)	Percent Full (%)	CIP No.	Notes
Kirkland_Main-2263	Kirkland_Manholes-2192	135.5	Kirkland_Manholes-2191	134.63	54	1.61	8	PVC	0.01	895	0	8	8	0.9		
Kirkland_Main-2265	Kirkland_Manholes-2120	156.16	O-33	155.88	68.2	0.41	8	PVC	0.01	452	2	4	6	1.4		
Kirkland_Main-2266	Kirkland_Manholes-2121	179.17	Kirkland_Manholes-2122	169.1	148.2	6.79	8	PVC	0.01	1,838	2	4	6	0.3	SM14-Ex-EX238	
Kirkland_Main-2267	Kirkland_Manholes-2122	169.1	Kirkland_Manholes-2123	164.83	234.6	1.82	8	PVC	0.01	951	2	8	11	1.1	SM14-Ex-EX238	
Kirkland_Main-2268	Kirkland_Manholes-2200	29.87	Kirkland_Manholes-2202	26.91	11.2	26.5	8	PVC	0.01	3,629	55	19	75	2.1		Slope confirmed by as-builts
Kirkland_Main-2270	Kirkland_Manholes-2209	69.6	Kirkland_Manholes-2206	66.42	347.3	0.92	8	PVC	0.01	675	1	8	9	1.4	SM8	
Kirkland_Main-2271	Kirkland_Manholes-2208	66.31	Kirkland_Manholes-2207	65.6	145.2	0.49	8	PVC	0.01	493	0	6	7	1.4	SM14-Ex-EX189	Drop Connection
Kirkland_Main-2272	Kirkland_Manholes-2216	56.6	Kirkland_Manholes-2217	22.48	221.2	15.42	8	PVC	0.01	2,769	5	32	38	1.4		
Kirkland_Main-2273	Kirkland_Manholes-2215	67.8	Kirkland_Manholes-2214	67.15	122.4	0.53	8	PVC	0.01	514	2	6	9	1.7		
Kirkland_Main-2274	Kirkland_Manholes-2214	67.15	Kirkland_Manholes-2213	66.3	36.8	2.31	8	PVC	0.01	1,071	2	13	15	1.4		
Kirkland_Main-2275	Kirkland_Manholes-2213	66.3	Kirkland_Manholes-2216	56.6	199.9	4.85	8	PVC	0.01	1,553	4	26	30	1.9		
Kirkland_Main-2276	Kirkland_Manholes-2212	72.13	Kirkland_Manholes-2213	66.3	100	5.83	8	PVC	0.01	1,702	2	6	8	0.5	SM14-Ex-EX190	
Kirkland_Main-2278	Kirkland_Manholes-2124	217.78	Kirkland_Manholes-2303	195.57	353.2	6.29	12	PVC	0.01	5,212	316	907	1,223	23.5	SM14-Ex-EX248	
Kirkland_Main-2280	Kirkland_Manholes-1463	498.43	Kirkland_Manholes-1464	490.77	337.1	2.27	8	PVC	0.01	1,063	6	16	23	2.1	SM14-Ex-EX271	
Kirkland_Main-2281	Kirkland_Manholes-1465	496.7	Kirkland_Manholes-1464	490.77	350	1.69	8	PVC	0.01	917	7	12	19	2	SM14-Ex-EX272	
Kirkland_Main-2282	Kirkland_Manholes-1464	490.77	Kirkland_Manholes-1469	490.09	171.1	0.4	8	PVC	0.01	446	15	33	47	10.6	SM14-Ex-EX271	
Kirkland_Main-2283	Kirkland_Manholes-1466	501.75	Kirkland_Manholes-1465	496.7	399.1	1.27	8	PVC	0.01	793	3	8	12	1.5	SM14-Ex-EX272	
Kirkland_Main-2284	Kirkland_Manholes-1467	507	Kirkland_Manholes-1466	501.75	336.1	1.56	8	PVC	0.01	881	1	4	5	0.6	SM14-Ex-EX272	
Kirkland_Main-2285	Kirkland_Manholes-1470	502.07	Kirkland_Manholes-1475	484.92	351.8	4.88	8	PVC	0.01	1,557	1	4	5	0.3	SM14-Ex-EX268	
Kirkland_Main-2286	Kirkland_Manholes-1471	502.1	Kirkland_Manholes-1472	489.92	152.5	7.99	8	PVC	0.01	1,993	1	4	5	0.3	SM14-Ex-EX267	
Kirkland_Main-2287	Kirkland_Manholes-1472	489.92	Kirkland_Manholes-1473	489.3	149.9	0.41	8	PVC	0.01	453	3	8	11	2.5	SM14-Ex-EX267	
Kirkland_Main-2288	Kirkland_Manholes-1473	489.3	Kirkland_Manholes-1474	483.04	397.5	1.57	8	PVC	0.01	885	4	12	17	1.9	SM14-Ex-EX267	
Kirkland_Main-2289	Kirkland_Manholes-1474	483.04	Kirkland_Manholes-1478	480.02	383.8	0.79	8	PVC	0.01	625	7	16	23	3.6	SM14-Ex-EX267	
Kirkland_Main-2290	Kirkland_Manholes-1475	484.92	Kirkland_Manholes-1476	483.18	394.8	0.44	8	PVC	0.01	468	2	8	10	2.2	SM14-Ex-EX268	
Kirkland_Main-2291	Kirkland_Manholes-1476	483.18	Kirkland_Manholes-1477	477.36	143.4	4.06	8	PVC	0.01	1,421	3	12	15	1.1	SM14-Ex-EX268	
Kirkland_Main-2292	Kirkland_Manholes-1477	477.36	Kirkland_Manholes-1481	462.54	116.7	12.7	8	PVC	0.01	2,512	4	16	20	0.8	SM14-Ex-EX268	
Kirkland_Main-2293	Kirkland_Manholes-1478	480.02	Kirkland_Manholes-1479	473.98	182.8	3.3	8	PVC	0.01	1,282	8	20	29	2.2	SM14-Ex-EX267	
Kirkland_Main-2294	Kirkland_Manholes-1479	473.98	Kirkland_Manholes-1483	455.88	188.4	9.61	8	PVC	0.01	2,185	9	24	33	1.5	SM14-Ex-EX267	
Kirkland_Main-2295	Kirkland_Manholes-1482	457.77	Kirkland_Manholes-1483	455.88	220.6	0.86	8	PVC	0.01	653	65	248	313	48	SM14-Ex-EX214	
Kirkland_Main-2296	Kirkland_Manholes-1483	455.88	Kirkland_Manholes-2042	455.6	242	0.12	12	PVC	0.01	707	75	277	352	49.7	SM14-Ex-EX214	
Kirkland_Main-2297	Kirkland_Manholes-1480	465.84	Kirkland_Manholes-1482	457.77	216.4	3.73	8	PVC	0.01	1,362	61	224	284	20.9	SM14-Ex-EX214	
Kirkland_Main-2298	Kirkland_Manholes-2162	123.07	Kirkland_Manholes-2139	96.6	399.7	6.62	8	PVC	0.01	1,814	5	16	21	1.2	SM14-Ex-EX194	
Kirkland_Main-2299	Kirkland_Manholes-2161	148.95	Kirkland_Manholes-2162	123.07	410.6	6.3	8	PVC	0.01	1,770	1	8	9	0.5	SM14-Ex-EX194	
Kirkland_Main-2300	Kirkland_Manholes-2239	125.2	Kirkland_Manholes-2238	92.13	326.8	10.12	8	PVC	0.01	2,243	2	6	8	0.4	SM14-Ex-EX224	
Kirkland_Main-2301	Kirkland_Manholes-2241	73.4	Kirkland_Manholes-2240	69.07	226.1	1.92	8	PVC	0.01	976	2	6	8	0.8		
Kirkland_Main-2302	Kirkland_Manholes-2159	84.71	Kirkland_Manholes-2240	69.07	248.4	6.3	8	PVC	0.01	1,769	20	65	85	4.8		
Kirkland_Main-2303	Kirkland_Manholes-2243	51.95	Kirkland_Manholes-2244	43.69	203.1	4.07	8	PVC	0.01	1,422	2	6	9	0.6		
Kirkland_Main-2304	Kirkland_Manholes-2240	69.07	Kirkland_Manholes-2244	43.69	271.1	9.36	8	PVC	0.01	2,157	24	78	102	4.7		
Kirkland_Main-2305	Kirkland_Manholes-2244	43.69	Kirkland_Manholes-2155	42.84	213.7	0.4	8	PVC	0.01	446	30	91	121	27.1		Drop Connection
Kirkland_Main-2306	Kirkland_Manholes-2494	170.93	Kirkland_Manholes-2132	159.52	411.9	2.77	8	PVC	0.01	1,173	18	24	42	3.6	SM14-Ex-EX236	
Kirkland_Main-2307	Kirkland_Manholes-2242	36.17	Kirkland_Manholes-2317	17.2	251	7.56	8	PVC	0.01	1,938	2	6	8	0.4	SM14-Ex-EX191	
Kirkland_Main-2308	Kirkland_Manholes-2229	22.53	Kirkland_Manholes-2313	22.37	40.9	0.4	8	PVC	0.01	446	17	39	56	12.5		Drop Connection
Kirkland_Main-2309	Kirkland_Manholes-2228	23.08	Kirkland_Manholes-2314	22.81	66.4	0.4	8	PVC	0.01	446	21	78	99	22.1		Drop Connection
Kirkland_Main-2311	Kirkland_Manholes-2257	348.17	Kirkland_Manholes-2256	329.88	184.1	9.94	8	PVC	0.01	2,222	1	4	5	0.2	SM14-Ex-EX254	
Kirkland_Main-2312	Kirkland_Manholes-2267	393.07	Kirkland_Manholes-2266	392.8	100.8	0.27	8	PVC	0.01	365	3	16	19	5.2		
Kirkland_Main-2313	Kirkland_Manholes-2715	29.78	Kirkland_Manholes-2716	29.3	129	0.37	12	PVC	0.01	1,268	83	18	102	8		
Kirkland_Main-2314	Kirkland_Manholes-2716	29.3	Kirkland_Manholes-2717	21.61	141.2	5.45	12	PVC	0.01	4,851	83	24	108	2.2		
Kirkland_Main-2315	Kirkland_Manholes-2717	21.61	Kirkland_Manholes-2718	21.4	363.5	0.06	12	PVC	0.01	500	83	31	114	22.8		
Kirkland_Main-2316	Kirkland_Manholes-2052	419.8	Kirkland_Manholes-2280	418.85	171.1	0.56	8	PVC	0.01	525	1	4	5	1	SM14-Ex-EX262	
Kirkland_Main-2317	Kirkland_Manholes-2280	418.85	Kirkland_Manholes-2279	418	153.8	0.55	8	PVC	0.01	524	2	8	10	2	SM14-Ex-EX262	
Kirkland_Main-2318	Kirkland_Manholes-2274	417.36	Kirkland_Manholes-2273	414.69	101.2	2.64	8	PVC	0.01	1,145	2	4	6	0.5		
Kirkland_Main-2319	Kirkland_Manholes-2279	418	Kirkland_Manholes-2268	401.9	291.9	5.52	8	PVC	0.01	1,656	3	12	15	0.9	SM14-Ex-EX262	
Kirkland_Main-2320	Kirkland_Manholes-2268	401.9	Kirkland_Manholes-2269	398.2	115.6	3.2	8	PVC	0.01	1,262	17	65	82	6.5	SM14-Ex-EX261	
Kirkland_Main-2321	Kirkland_Manholes-2270	403.21	Kirkland_Manholes-2269	398.2	107.6	4.66	8	PVC	0.01	1,521	5	37	42	2.7		
Kirkland_Main-2322	Kirkland_Manholes-2273	414.69	Kirkland_Manholes-2272	410.23	107.4	4.15	8	PVC	0.01	1,437	2	8	10	0.7		
Kirkland_Main-2323	Kirkland_Manholes-2272	410.23	Kirkland_Manholes-2271	405.49	51.3	9.24	8	PVC	0.01	2,143	2	12	14	0.7		
Kirkland_Main-2324	Kirkland_Manholes-2271	405.49	Kirkland_Manholes-2270	403.21	91.2	2.5	8	PVC	0.01	1,115	5	33	37	3.3		
Kirkland_Main-2325	Kirkland_Manholes-2276	410.45	Kirkland_Manholes-2277	408.15	110.4	2.08	8	PVC	0.01	1,017	2	8	10	1		
Kirkland_Main-2326	Kirkland_Manholes-2277	408.15	Kirkland_Manholes-2278	406.74	80.9	1.74	8	PVC	0.01	931	2	12	14	1.6		
Kirkland_Main-2327	Kirkland_Manholes-1228	189.87	Kirkland_Manholes-1227	174.57	207.5	7.37	8	PVC	0.01	1,915	25	74	99	5.2	SM14-Ex-EX96	
Kirkland_Main-2329	Kirkland_Manholes-1226	185.47	Kirkland_Manholes-1227	174.57	349.3	3.12	8	PVC	0.01	1,245	3	8	11	0.9	SM14-Ex-EX93	
Kirkland_Main-2333	Kirkland_Manholes-1209	251.94	Kirkland_Manholes-1208	237.71	314.7	4.52	8	PVC	0.01	1,499	11	31	42	2.8	SM14-Ex-EX90	

2021 (6-year) with Proposed Improvements - Peak Hour Flow - Pipe Capacity Table

Label	Upstream Node	Upstream Invert Elevation (ft)	Downstream Node	Downstream Invert Elevation (ft)	Length (ft)	Slope (%)	Diameter (in)	Material	Manning's n	Design Capacity (gpm)	Domestic Flow (gpm)	I/I Flow (gpm)	Total Flow (gpm)	Percent Full (%)	CIP No.	Notes
Kirkland_Main-2335	Kirkland_Manholes-1210	257.02	Kirkland_Manholes-1209	251.94	317.5	1.6	8	PVC	0.01	892	8	23	31	3.5	SM14-Ex-EX90	
Kirkland_Main-2341	Kirkland_Manholes-1214	261.31	Kirkland_Manholes-1215	243.02	404.6	4.52	8	PVC	0.01	1,499	6	11	17	1.1	SM14-Ex-EX90	
Kirkland_Main-2342	Kirkland_Manholes-1241	267.65	Kirkland_Manholes-1215	243.02	241.5	10.2	8	PVC	0.01	2,252	4	4	8	0.4	SM14-Ex-EX63	
Kirkland_Main-2343	Kirkland_Manholes-1215	243.02	Kirkland_Manholes-1134	223.76	275.3	7	8	PVC	0.01	1,865	11	19	30	1.6	SM14-Ex-EX63	
Kirkland_Main-2344	Kirkland_Manholes-1217	232.97	Kirkland_Manholes-1218	220.85	252.7	4.8	8	PVC	0.01	1,544	1	4	6	0.4	SM14-Ex-EX59	
Kirkland_Main-2345	Kirkland_Manholes-1270	246.8	Kirkland_Manholes-1245	243.41	285.9	1.19	8	PVC	0.01	768	1	8	9	1.2	SM14-Ex-EX64	
Kirkland_Main-2348	Kirkland_Manholes-1276	172.95	Kirkland_Manholes-1279	163.99	169.3	5.29	8	PVC	0.01	1,622	4	16	21	1.3		
Kirkland_Main-2349	Kirkland_Manholes-1569	157.57	Kirkland_Manholes-1293	152.35	333.3	1.57	8	PVC	0.01	882	5	8	13	1.5	SM14-Ex-EX113	
Kirkland_Main-2350	Kirkland_Manholes-1293	152.35	Kirkland_Manholes-1292	148.28	368.4	1.1	8	PVC	0.01	741	9	16	25	3.4	SM14-Ex-EX113	
Kirkland_Main-2351	Kirkland_Manholes-1568	145.18	Kirkland_Manholes-1297	132.74	335	3.71	8	PVC	0.01	1,359	3	8	11	0.8	SM14-Ex-EX114	
Kirkland_Main-2352	Kirkland_Manholes-1297	132.74	Kirkland_Manholes-1296	129.32	308.3	1.11	8	PVC	0.01	743	4	16	21	2.8	SM14-Ex-EX114	
Kirkland_Main-2353	Kirkland_Manholes-1281	154.69	Kirkland_Manholes-1292	148.28	310.6	2.06	8	PVC	0.01	1,013	52	247	299	29.6	SM14-Ex-EX102	
Kirkland_Main-2354	Kirkland_Manholes-1292	148.28	Kirkland_Manholes-1296	129.32	322	5.89	8	PVC	0.01	1,711	63	272	335	19.6	SM14-Ex-EX102	
Kirkland_Main-2357	Kirkland_Manholes-1266	188.85	Kirkland_Manholes-1264	172.1	141.2	11.87	8	PVC	0.01	2,429	1	8	9	0.4		
Kirkland_Main-2358	Kirkland_Manholes-1264	172.1	Kirkland_Manholes-1265	168.12	70.1	5.67	8	PVC	0.01	1,679	1	16	18	1.1		
Kirkland_Main-2363	Kirkland_Manholes-1273	182.86	Kirkland_Manholes-1274	175.64	151.8	4.76	8	PVC	0.01	1,538	5	25	30	2		
Kirkland_Main-2364	Kirkland_Manholes-1252	181.71	Kirkland_Manholes-1277	163.83	245.6	7.28	8	PVC	0.01	1,902	42	190	231	12.2	SM14-Ex-EX101	
Kirkland_Main-2365	Kirkland_Manholes-1277	163.83	Kirkland_Manholes-1278	160.09	110.9	3.37	8	PVC	0.01	1,295	43	198	241	18.6	SM14-Ex-EX102	
Kirkland_Main-2366	Kirkland_Manholes-1278	160.09	Kirkland_Manholes-1280	156.25	144.5	2.66	8	PVC	0.01	1,149	48	231	279	24.3	SM14-Ex-EX102	
Kirkland_Main-2367	Kirkland_Manholes-1280	156.25	Kirkland_Manholes-1281	154.69	317.7	0.49	8	PVC	0.01	494	51	239	290	58.6	SM14-Ex-EX102	
Kirkland_Main-2369	Kirkland_Manholes-1311	230.66	Kirkland_Manholes-1312	230.27	96.9	0.4	8	PVC	0.01	446	0	4	4	1		
Kirkland_Main-2370	Kirkland_Manholes-1313	230.7	Kirkland_Manholes-1312	230.27	76.5	0.56	8	PVC	0.01	528	4	13	17	3.2		
Kirkland_Main-2371	Kirkland_Manholes-1312	230.27	Kirkland_Manholes-1306	225.07	369.5	1.41	8	PVC	0.01	836	4	22	26	3.1		
Kirkland_Main-2372	Kirkland_Manholes-1513	263.11	Kirkland_Manholes-1515	261.7	138	1.02	8	PVC	0.01	713	38	146	184	25.9	SM14-Ex-EX131	
Kirkland_Main-2373	Kirkland_Manholes-1508	264.2	Kirkland_Manholes-1514	263.47	179.7	0.41	8	PVC	0.01	450	35	134	169	37.6	SM14-Ex-EX131	
Kirkland_Main-2374	Kirkland_Manholes-1684	76.22	Kirkland_Manholes-1683	75.33	41.4	2.15	8	PVC	0.01	1,034	3	8	11	1.1		
Kirkland_Main-2375	Kirkland_Manholes-1851	275	Kirkland_Manholes-1316	272.4	254.5	1.02	8	PVC	0.01	713	1	8	9	1.3		
Kirkland_Main-2376	Kirkland_Manholes-1317	271.64	Kirkland_Manholes-924	268.15	334	1.04	12	PVC	0.01	2,125	132	435	568	26.7		
Kirkland_Main-2377	Kirkland_Manholes-2984	277.63	Kirkland_Manholes-1317	271.64	132.6	4.52	10	PVC	0.01	2,717	129	383	511	18.8		
Kirkland_Main-2378	Kirkland_Manholes-1371	376.15	Kirkland_Manholes-3081	373.55	185	1.41	8	PVC	0.01	836	79	183	262	31.4		
Kirkland_Main-2379	Kirkland_Manholes-1319	372.4	Kirkland_Manholes-1318	358.26	123	11.5	8	PVC	0.01	2,391	82	195	277	11.6		
Kirkland_Main-2380	Kirkland_Manholes-1318	358.26	Kirkland_Manholes-1320	342.61	140.9	11.1	10	PVC	0.01	4,260	82	199	281	6.6		
Kirkland_Main-2381	Kirkland_Manholes-1320	342.61	Kirkland_Manholes-1326	321.42	151.5	13.98	10	PVC	0.01	4,780	112	269	380	8		
Kirkland_Main-2382	Kirkland_Manholes-1514	263.47	Kirkland_Manholes-1513	263.11	127.9	0.28	8	PVC	0.01	374	36	138	175	46.7	SM14-Ex-EX131	
Kirkland_Main-2383	Kirkland_Manholes-1507	265.94	Kirkland_Manholes-1508	264.2	288.2	0.6	8	PVC	0.01	547	31	118	149	27.2	SM14-Ex-EX131	
Kirkland_Main-2384	Kirkland_Manholes-1322	342.78	Kirkland_Manholes-1320	342.61	36.2	0.47	8	PVC	0.01	483	29	65	95	19.6		
Kirkland_Main-2385	Kirkland_Manholes-1321	355.4	Kirkland_Manholes-1322	342.78	269.6	4.68	8	PVC	0.01	1,525	29	61	90	5.9		
Kirkland_Main-2386	Kirkland_Manholes-1335	367.98	Kirkland_Manholes-1321	355.4	137.9	9.12	8	PVC	0.01	2,129	27	57	84	3.9		
Kirkland_Main-2387	Kirkland_Manholes-1323	332.91	Kirkland_Manholes-1324	332.34	49.4	1.15	8	PVC	0.01	757	1	4	5	0.7		
Kirkland_Main-2388	Kirkland_Manholes-1324	332.34	Kirkland_Manholes-1325	323.2	121	7.55	8	PVC	0.01	1,938	2	8	10	0.5		
Kirkland_Main-2389	Kirkland_Manholes-1325	323.2	Kirkland_Manholes-1326	321.42	174.1	1.02	8	PVC	0.01	713	3	12	15	2.1		
Kirkland_Main-2390	Kirkland_Manholes-1326	321.42	Kirkland_Manholes-1339	314.87	128.9	5.08	10	PVC	0.01	2,880	117	297	414	14.4		
Kirkland_Main-2391	Kirkland_Manholes-1337	323.9	Kirkland_Manholes-1326	321.42	30.5	8.12	8	PVC	0.01	2,009	2	12	14	0.7		
Kirkland_Main-2392	Kirkland_Manholes-1327	326.71	Kirkland_Manholes-1337	323.9	27.1	10.37	8	PVC	0.01	2,271	2	8	10	0.4		
Kirkland_Main-2393	Kirkland_Manholes-1328	394.1	Kirkland_Manholes-1329	393.5	241.8	0.25	8	PVC	0.01	351	5	28	33	9.5		
Kirkland_Main-2394	Kirkland_Manholes-1329	393.5	Kirkland_Manholes-1330	392.47	187.9	0.55	8	PVC	0.01	522	6	33	39	7.4		
Kirkland_Main-2395	Kirkland_Manholes-1330	392.47	Kirkland_Manholes-1332	391.73	102.7	0.72	8	PVC	0.01	597	7	37	43	7.2		
Kirkland_Main-2396	Kirkland_Manholes-1332	391.73	Kirkland_Manholes-1333	390.44	145.6	0.89	8	PVC	0.01	664	25	45	70	10.5	SM14-Ex-EX177	Drop Connection
Kirkland_Main-2397	Kirkland_Manholes-1331	393.51	Kirkland_Manholes-1332	391.73	79.5	2.24	8	PVC	0.01	1,054	0	4	4	0.4	SM14-Ex-EX177	
Kirkland_Main-2398	Kirkland_Manholes-1333	387.1	Kirkland_Manholes-1334	373.64	147.7	9.12	8	PVC	0.01	2,129	26	49	74	3.5		
Kirkland_Main-2399	Kirkland_Manholes-1334	373.64	Kirkland_Manholes-1335	367.98	202.7	2.79	8	PVC	0.01	1,178	26	53	79	6.7		
Kirkland_Main-2400	Kirkland_Manholes-1336	341.09	Kirkland_Manholes-1327	326.71	166.6	8.63	8	PVC	0.01	2,071	1	4	5	0.3		
Kirkland_Main-2401	Kirkland_Manholes-1338	316.17	Kirkland_Manholes-1339	314.87	207.4	0.63	8	PVC	0.01	557	1	4	5	0.9		
Kirkland_Main-2402	Kirkland_Manholes-1339	314.87	Kirkland_Manholes-1342	287.41	238.7	11.5	10	PVC	0.01	4,335	119	305	424	9.8		Drop Connection
Kirkland_Main-2403	Kirkland_Manholes-1345	289.73	Kirkland_Manholes-1344	287.44	243.6	0.94	8	PVC	0.01	684	1	4	5	0.8		
Kirkland_Main-2404	Kirkland_Manholes-1344	287.44	Kirkland_Manholes-1343	283.8	35.3	10.32	8	PVC	0.01	2,265	2	8	10	0.4		
Kirkland_Main-2405	Kirkland_Manholes-1343	283.8	Kirkland_Manholes-1342	283.15	24.6	2.63	8	PVC	0.01	1,144	2	12	14	1.2		
Kirkland_Main-2406	Kirkland_Manholes-1340	293.32	Kirkland_Manholes-1342	293.12	51.1	0.4	8	PVC	0.01	446	8	57	65	14.6		Drop Connection
Kirkland_Main-2407	Kirkland_Manholes-1341	299.38	Kirkland_Manholes-1340	293.32	143.1	4.24	8	PVC	0.01	1,451	7	53	60	4.2		
Kirkland_Main-2408	Kirkland_Manholes-1346	416.9	Kirkland_Manholes-1351	414.82	383.4	0.54	8	PVC	0.01	519	0	4	4	0.8	SM14-Ex-EX181	
Kirkland_Main-2409	Kirkland_Manholes-1351	414.82	Kirkland_Manholes-1350	414.2	207.6	0.3	12	PVC	0.01	1,136	72	183	255	22.4	SM14-Ex-EX215	
Kirkland_Main-2410	Kirkland_Manholes-1350	414.2	Kirkland_Manholes-1917	413.2	125.7	0.8	12	PVC	0.01	1,854	75	191	266	14.4	SM14-Ex-EX215	

2021 (6-year) with Proposed Improvements - Peak Hour Flow - Pipe Capacity Table

Label	Upstream Node	Upstream Invert Elevation (ft)	Downstream Node	Downstream Invert Elevation (ft)	Length (ft)	Slope (%)	Diameter (in)	Material	Manning's n	Design Capacity (gpm)	Domestic Flow (gpm)	I/I Flow (gpm)	Total Flow (gpm)	Percent Full (%)	CIP No.	Notes
Kirkland_Main-2411	Kirkland_Manholes-1373	425.99	Kirkland_Manholes-1350	414.2	373.4	3.16	8	PVC	0.01	1,253	2	4	6	0.5	SM14-Ex-EX217	
Kirkland_Main-2412	Kirkland_Manholes-612	119.17	Kirkland_Manholes-613	104.8	247.7	5.8	8	PVC	0.01	1,698	1	8	9	0.5	SM14-Ex-EX149	
Kirkland_Main-2413	Kirkland_Manholes-613	104.8	Kirkland_Manholes-614	87.89	231.1	7.32	8	PVC	0.01	1,907	4	16	20	1.1	SM14-Ex-EX149	
Kirkland_Main-2414	Kirkland_Manholes-609	139.22	Kirkland_Manholes-1799	133.76	308.5	1.77	8	PVC	0.01	938	2	8	11	1.1	SM14-Ex-EX146	
Kirkland_Main-2417	Kirkland_Manholes-611	126.2	Kirkland_Manholes-610	123.3	146.2	1.98	8	PVC	0.01	993	1	8	9	0.9	SM14-Ex-EX148	
Kirkland_Main-2418	Kirkland_Manholes-610	123.3	Kirkland_Manholes-1801	112.29	320.9	3.43	8	PVC	0.01	1,306	3	16	19	1.5	SM14-Ex-EX148	
Kirkland_Main-2420	Kirkland_Manholes-585	162.05	Kirkland_Manholes-1797	142.57	517.3	3.77	8	PVC	0.01	1,368	1	8	10	0.7	SM14-Ex-EX144	
Kirkland_Main-2424	Kirkland_Manholes-582	179.11	Kirkland_Manholes-583	174.24	247.1	1.97	8	PVC	0.01	990	2	8	10	1	SM14-Ex-EX91	
Kirkland_Main-2425	Kirkland_Manholes-583	174.24	Kirkland_Manholes-1796	160.8	295.1	4.55	8	PVC	0.01	1,505	4	16	20	1.3	SM14-Ex-EX91	
Kirkland_Main-2426	Kirkland_Manholes-586	156.07	Kirkland_Manholes-587	133.23	320.6	7.12	8	PVC	0.01	1,882	1	8	9	0.5	SM14-Ex-EX145	
Kirkland_Main-2427	Kirkland_Manholes-587	133.23	Kirkland_Manholes-588	128.35	150.1	3.25	8	PVC	0.01	1,271	4	16	20	1.6	SM14-Ex-EX145	
Kirkland_Main-2428	Kirkland_Manholes-580	147.12	Kirkland_Manholes-588	128.35	316.6	5.93	8	PVC	0.01	1,717	32	115	148	8.6	SM14-Ex-EX96	
Kirkland_Main-2430	Kirkland_Manholes-581	170.5	Kirkland_Manholes-580	147.12	349.2	6.7	8	PVC	0.01	1,824	2	8	11	0.6	SM14-Ex-EX94	
Kirkland_Main-2431	Kirkland_Manholes-588	128.35	Kirkland_Manholes-606	111.69	288.6	5.77	8	PVC	0.01	1,694	37	140	177	10.5	SM14-Ex-EX96	
Kirkland_Main-2432	Kirkland_Manholes-1506	266.15	Kirkland_Manholes-1507	265.94	137.9	0.15	8	PVC	0.01	275	31	114	144	52.5		
Kirkland_Main-2433	Kirkland_Manholes-605	109.94	Kirkland_Manholes-604	92.41	437.3	4.01	8	PVC	0.01	1,412	7	8	16	1.1	SM14-Ex-EX160	
Kirkland_Main-2434	Kirkland_Manholes-590	118.3	Kirkland_Manholes-591	102.05	327.5	4.96	8	PVC	0.01	1,571	5	16	22	1.4	SM14-Ex-EX158	
Kirkland_Main-2435	Kirkland_Manholes-591	102.05	Kirkland_Manholes-592	96.93	331.1	1.55	8	PVC	0.01	877	9	25	34	3.9	SM14-Ex-EX158	
Kirkland_Main-2436	Kirkland_Manholes-592	96.93	Kirkland_Manholes-602	90.22	292.3	2.3	8	PVC	0.01	1,068	81	371	452	42.3	SM5	
Kirkland_Main-2437	Kirkland_Manholes-597	99.4	Kirkland_Manholes-592	96.93	306.8	0.8	8	PVC	0.01	633	8	41	50	7.8	SM14-Ex-EX158	
Kirkland_Main-2438	Kirkland_Manholes-1612	97.3	Kirkland_Manholes-599	92.8	301.8	1.49	8	PVC	0.01	861	0	8	9	1	SM14-Ex-EX160	
Kirkland_Main-2440	Kirkland_Manholes-573	132.21	Kirkland_Manholes-572	113.73	388	4.76	8	PVC	0.01	1,539	4	8	12	0.8	SM14-Ex-EX118	
Kirkland_Main-2441	Kirkland_Manholes-572	113.73	Kirkland_Manholes-596	110.91	307.7	0.92	8	PVC	0.01	675	96	338	434	64.3	SM14-Ex-EX117	
Kirkland_Main-2442	Kirkland_Manholes-595	103.44	Kirkland_Manholes-597	99.4	155.7	2.6	8	PVC	0.01	1,136	7	33	40	3.5	SM14-Ex-EX116	
Kirkland_Main-2443	Kirkland_Manholes-576	111.2	Kirkland_Manholes-593	103.61	155.5	4.88	8	PVC	0.01	1,558	61	288	349	22.4	SM5	
Kirkland_Main-2444	Kirkland_Manholes-593	103.61	Kirkland_Manholes-592	96.93	157.1	4.25	8	PVC	0.01	1,454	62	297	359	24.7	SM5	
Kirkland_Main-2445	Kirkland_Manholes-577	113.69	Kirkland_Manholes-576	111.2	334.4	0.74	8	PVC	0.01	608	8	25	33	5.3	SM14-Ex-EX112	
Kirkland_Main-2446	Kirkland_Manholes-578	130.09	Kirkland_Manholes-577	113.69	328.9	4.99	8	PVC	0.01	1,574	4	16	21	1.3	SM14-Ex-EX112	
Kirkland_Main-2447	Kirkland_Manholes-2065	431.1	Kirkland_Manholes-2295	415.45	308.4	5.07	8	PVC	0.01	1,588	2	4	6	0.4		
Kirkland_Main-2448	Kirkland_Manholes-579	148.3	Kirkland_Manholes-578	130.09	329.4	5.53	8	PVC	0.01	1,658	2	8	10	0.6	SM14-Ex-EX112	
Kirkland_Main-2449	Kirkland_Manholes-584	159.38	Kirkland_Manholes-580	147.12	165.2	7.42	8	PVC	0.01	1,921	29	99	128	6.7	SM14-Ex-EX96	
Kirkland_Main-2450	Kirkland_Manholes-615	97.62	Kirkland_Manholes-614	87.89	329.8	2.95	8	PVC	0.01	1,211	1	8	9	0.8	SM14-Ex-EX149	
Kirkland_Main-2451	Kirkland_Manholes-604	92.41	Kirkland_Manholes-621	70.36	291.4	7.57	8	PVC	0.01	1,940	12	21	32	1.7	SM14-Ex-EX161	
Kirkland_Main-2452	Kirkland_Manholes-626	276.72	Kirkland_Manholes-627	275.98	244.8	0.3	8	PVC	0.01	388	1	4	5	1.4		
Kirkland_Main-2453	Kirkland_Manholes-628	242.79	Kirkland_Manholes-629	242.12	61.5	1.09	8	PVC	0.01	736	36	142	178	24.3		
Kirkland_Main-2454	Kirkland_Manholes-629	242.12	Kirkland_Manholes-630	239.43	331.8	0.81	8	PVC	0.01	635	37	146	184	28.9		
Kirkland_Main-2455	Kirkland_Manholes-648	244.79	Kirkland_Manholes-628	242.79	365.8	0.55	8	PVC	0.01	521	35	138	173	33.2		
Kirkland_Main-2456	Kirkland_Manholes-631	237.5	Kirkland_Manholes-632	237.32	36.6	0.5	8	PVC	0.01	498	38	155	193	38.6		Updated Per As-Builts (Drop Connection)
Kirkland_Main-2457	Kirkland_Manholes-630	239.43	Kirkland_Manholes-631	237.5	158.9	1.21	8	PVC	0.01	777	38	151	188	24.2		
Kirkland_Main-2458	Kirkland_Manholes-633	234.78	Kirkland_Manholes-634	228.12	123.4	5.4	21	PVC	0.01	21,481	542	1,579	2,121	9.9		
Kirkland_Main-2459	Kirkland_Manholes-635	248.49	Kirkland_Manholes-634	228.12	181.8	11.21	8	PVC	0.01	2,360	2	4	6	0.2		
Kirkland_Main-2460	Kirkland_Manholes-634	228.12	Kirkland_Manholes-632	228	216.6	0.06	24	PVC	0.01	3,107	543	1,587	2,130	68.6	SM14-Ex-EX75	
Kirkland_Main-2461	Kirkland_Manholes-632	228	Kirkland_Manholes-636	227	153.6	0.65	21	PVC	0.01	7,460	581	1,746	2,327	31.2		
Kirkland_Main-2462	Kirkland_Manholes-636	227	Kirkland_Manholes-335	225.11	273.2	0.69	21	PVC	0.01	7,690	581	1,750	2,331	30.3		
Kirkland_Main-2466	Kirkland_Manholes-640	237.92	Kirkland_Manholes-639	237.89	31.5	0.1	18	PVC	0.01	1,891	295	1,074	1,370	72.4	SM14-2035-DF8	
Kirkland_Main-2467	Kirkland_Manholes-639	237.89	Kirkland_Manholes-638	236.51	242.7	0.57	21	PVC	0.01	6,971	533	1,567	2,100	30.1		
Kirkland_Main-2468	Kirkland_Manholes-647	246.6	Kirkland_Manholes-646	244.32	287.5	0.79	8	PVC	0.01	628	6	4	10	1.6		
Kirkland_Main-2469	Kirkland_Manholes-646	244.32	Kirkland_Manholes-645	243.42	85.6	1.05	8	PVC	0.01	723	7	8	15	2		
Kirkland_Main-2470	Kirkland_Manholes-644	249.23	Kirkland_Manholes-643	242.32	131.1	5.27	8	PVC	0.01	1,619	2	4	6	0.3		
Kirkland_Main-2471	Kirkland_Manholes-645	243.42	Kirkland_Manholes-643	242.32	253.7	0.43	18	PVC	0.01	4,035	289	1,054	1,343	33.3		
Kirkland_Main-2472	Kirkland_Manholes-643	242.32	Kirkland_Manholes-642	242.1	113.5	0.19	18	PVC	0.01	2,698	291	1,062	1,353	50.2		
Kirkland_Main-2473	Kirkland_Manholes-642	242.1	Kirkland_Manholes-641	241.26	301.1	0.28	18	PVC	0.01	3,237	294	1,066	1,360	42		
Kirkland_Main-2474	Kirkland_Manholes-641	241.26	Kirkland_Manholes-640	237.92	280	1.19	18	PVC	0.01	6,693	295	1,070	1,365	20.4		
Kirkland_Main-2475	Kirkland_Manholes-650	246.28	Kirkland_Manholes-649	244.91	253.4	0.54	8	PVC	0.01	518	28	106	134	25.9		
Kirkland_Main-2476	Kirkland_Manholes-661	245.17	Kirkland_Manholes-648	244.79	204.2	0.19	8	PVC	0.01	304	4	24	29	9.4		
Kirkland_Main-2477	Kirkland_Manholes-649	244.91	Kirkland_Manholes-648	244.79	14.5	0.83	8	PVC	0.01	641	30	110	140	21.9		
Kirkland_Main-2478	Kirkland_Manholes-681	256.89	Kirkland_Manholes-684	256.25	143.5	0.45	8	PVC	0.01	473	22	37	59	12.4		
Kirkland_Main-2479	Kirkland_Manholes-683	268.99	Kirkland_Manholes-682	258.64	128.7	8.04	8	PVC	0.01	1,999	0	4	4	0.2		
Kirkland_Main-2480	Kirkland_Manholes-689	265.38	Kirkland_Manholes-688	264.8	145.1	0.4	8	PVC	0.01	445	1	4	5	1		
Kirkland_Main-2481	Kirkland_Manholes-688	264.8	Kirkland_Manholes-687	264	200.3	0.4	8	PVC	0.01	446	2	8	10	2.3		
Kirkland_Main-2482	Kirkland_Manholes-695	344.34	Kirkland_Manholes-696	340.09	297.3	1.43	8	PVC	0.01	843	5	8	13	1.6	SM14-Ex-EX74	
Kirkland_Main-2483	Kirkland_Manholes-829	344.99	Kirkland_Manholes-695	344.34	301.8	0.22	8	PVC	0.01	327	2	4	6	1.8	SM14-Ex-EX74	

2021 (6-year) with Proposed Improvements - Peak Hour Flow - Pipe Capacity Table

Label	Upstream Node	Upstream Invert Elevation (ft)	Downstream Node	Downstream Invert Elevation (ft)	Length (ft)	Slope (%)	Diameter (in)	Material	Manning's n	Design Capacity (gpm)	Domestic Flow (gpm)	I/I Flow (gpm)	Total Flow (gpm)	Percent Full (%)	CIP No.	Notes
Kirkland_Main-2484	Kirkland_Manholes-694	328.94	Kirkland_Manholes-693	302.3	232.9	11.44	8	PVC	0.01	2,384	2	4	6	0.2		
Kirkland_Main-2485	Kirkland_Manholes-691	306.23	Kirkland_Manholes-693	302.3	272.1	1.44	8	PVC	0.01	847	3	8	11	1.3		
Kirkland_Main-2486	Kirkland_Manholes-692	325.47	Kirkland_Manholes-691	306.23	258.4	7.45	8	PVC	0.01	1,924	1	4	5	0.3		
Kirkland_Main-2487	Kirkland_Manholes-693	302.3	Kirkland_Manholes-807	300.8	136	1.1	8	PVC	0.01	741	6	16	23	3.1		
Kirkland_Main-2488	Kirkland_Manholes-690	274.25	Kirkland_Manholes-701	273.2	290.3	0.36	8	PVC	0.01	424	4	12	16	3.9		
Kirkland_Main-2489	Kirkland_Manholes-699	288.54	Kirkland_Manholes-701	273.2	288.8	5.31	8	PVC	0.01	1,625	3	8	11	0.7		
Kirkland_Main-2490	Kirkland_Manholes-698	313.56	Kirkland_Manholes-699	288.54	182.5	13.71	8	PVC	0.01	2,611	1	4	5	0.2		
Kirkland_Main-2492	Kirkland_Manholes-697	318.15	Kirkland_Manholes-700	302.48	274.3	5.71	8	PVC	0.01	1,685	1	4	5	0.3		
Kirkland_Main-2493	Kirkland_Manholes-700	302.48	Kirkland_Manholes-690	274.25	242.5	11.64	8	PVC	0.01	2,405	3	8	12	0.5		
Kirkland_Main-2494	Kirkland_Manholes-703	275.12	Kirkland_Manholes-704	272.37	210.2	1.31	8	PVC	0.01	806	2	4	6	0.7		
Kirkland_Main-2495	Kirkland_Manholes-702	273	Kirkland_Manholes-704	272.37	144.8	0.44	8	PVC	0.01	465	11	28	39	8.4		
Kirkland_Main-2496	Kirkland_Manholes-701	273.2	Kirkland_Manholes-702	273	143.3	0.14	8	PVC	0.01	263	9	24	34	12.7		
Kirkland_Main-2497	Kirkland_Manholes-723	131.03	O-42	125.22	186.8	3.11	12	PVC	0.01	3,666	304	122	426	11.6	SM14-2021-DF2	
Kirkland_Main-2498	Kirkland_Manholes-722	137.76	Kirkland_Manholes-723	131.03	91.1	7.39	12	PVC	0.01	5,651	303	116	419	7.4	SM14-2021-DF2	
Kirkland_Main-2499	Kirkland_Manholes-721	142.27	Kirkland_Manholes-722	137.76	93.1	4.84	12	PVC	0.01	4,574	300	111	411	9	SM14-2021-DF2	
Kirkland_Main-2500	Kirkland_Manholes-720	147.09	Kirkland_Manholes-721	142.27	318.3	1.51	12	PVC	0.01	2,558	300	105	405	15.8	SM14-2021-DF2	
Kirkland_Main-2501	Kirkland_Manholes-719	148.45	Kirkland_Manholes-720	147.09	142.4	0.95	12	PVC	0.01	2,031	300	99	399	19.7	SM14-2021-DF2	
Kirkland_Main-2502	Kirkland_Manholes-717	151.36	Kirkland_Manholes-718	150.12	225.4	0.55	8	PVC	0.01	523	297	76	373	71.3	SM14-2035-DF5	
Kirkland_Main-2503	Kirkland_Manholes-716	152.58	Kirkland_Manholes-717	151.36	272.7	0.45	8	PVC	0.01	472	297	70	367	77.9	SM14-2035-DF5	
Kirkland_Main-2504	Kirkland_Manholes-725	154.45	Kirkland_Manholes-716	152.58	174.3	1.07	8	PVC	0.01	730	289	47	335	45.9		
Kirkland_Main-2505	Kirkland_Manholes-726	155.56	Kirkland_Manholes-725	154.45	157.9	0.7	8	PVC	0.01	591	289	41	330	55.8		
Kirkland_Main-2506	Kirkland_Manholes-713	156.49	Kirkland_Manholes-726	155.56	219	0.43	8	PVC	0.01	460	272	35	307	66.7		
Kirkland_Main-2507	Kirkland_Manholes-712	157.06	Kirkland_Manholes-713	156.49	30.1	1.89	8	PVC	0.01	971	272	29	301	31		
Kirkland_Main-2508	Kirkland_Manholes-714	170.75	Kirkland_Manholes-712	157.06	209.3	6.54	8	PVC	0.01	1,803	241	12	253	14		
Kirkland_Main-2509	Kirkland_Manholes-715	181.7	Kirkland_Manholes-714	170.75	155	7.07	8	PVC	0.01	1,874	0	6	6	0.3		
Kirkland_Main-2510	Kirkland_Manholes-1398	27.8	Kirkland_Manholes-1397	27.53	119.5	0.23	30	PVC	0.01	11,376	164	1,014	2,929	25.7	SM14-Ex-EX154	
Kirkland_Main-2511	Kirkland_Manholes-1397	27.53	Kirkland_Manholes-1396	27.46	145.3	0.05	30	PVC	0.01	5,139	164	1,022	2,937	57.1	SM14-Ex-EX154	
Kirkland_Main-2512	Kirkland_Manholes-1399	44.47	Kirkland_Manholes-1398	27.8	324.1	5.14	12	PVC	0.01	4,715	160	1,005	1,516	32.2	SM14-Ex-EX143	
Kirkland_Main-2513	Kirkland_Manholes-1400	61.37	Kirkland_Manholes-1399	44.47	267.9	6.31	12	PVC	0.01	5,221	159	997	1,506	28.8	SM14-Ex-EX143	
Kirkland_Main-2514	Kirkland_Manholes-1401	76.78	Kirkland_Manholes-1400	61.37	289.6	5.32	8		0.012	1,355	40	280	320	23.6		
Kirkland_Main-2515	Kirkland_Manholes-1402	82.36	Kirkland_Manholes-1401	76.78	122	4.57	8		0.012	1,257	38	264	302	24		
Kirkland_Main-2516	Kirkland_Manholes-711	219.85	Kirkland_Manholes-710	219.11	65.7	1.13	8	PVC	0.01	748	10	8	18	2.4		
Kirkland_Main-2517	Kirkland_Manholes-710	219.11	Kirkland_Manholes-709	218.2	118.5	0.77	8	PVC	0.01	618	10	12	22	3.6		
Kirkland_Main-2518	Kirkland_Manholes-709	218.2	Kirkland_Manholes-707	216.1	262.1	0.8	8	PVC	0.01	631	10	16	26	4.2		
Kirkland_Main-2519	Kirkland_Manholes-708	217.66	Kirkland_Manholes-707	216.1	74	2.11	8	PVC	0.01	1,024	0	4	4	0.4		
Kirkland_Main-2520	Kirkland_Manholes-707	216.1	Kirkland_Manholes-706	215.57	102.1	0.52	8	PVC	0.01	508	10	24	34	6.8		
Kirkland_Main-2521	Kirkland_Manholes-706	215.57	Kirkland_Manholes-369	208.86	103.2	6.5	8	PVC	0.01	1,798	10	28	39	2.1		
Kirkland_Main-2522	Kirkland_Manholes-1403	89.74	Kirkland_Manholes-1402	82.36	156.6	4.71	8		0.012	1,276	31	239	270	21.1		
Kirkland_Main-2523	Kirkland_Manholes-1805	101.51	Kirkland_Manholes-1403	89.74	269.7	4.36	8		0.012	1,227	29	222	252	20.5		
Kirkland_Main-2524	Kirkland_Manholes-1404	117.83	Kirkland_Manholes-1805	101.51	279.3	5.84	8		0.012	1,420	8	91	98	6.9		
Kirkland_Main-2525	Kirkland_Manholes-1405	132.7	Kirkland_Manholes-1404	117.83	317.4	4.68	8		0.012	1,272	8	82	90	7.1		
Kirkland_Main-2526	Kirkland_Manholes-1396	27.46	Kirkland_Manholes-1395	27.24	179.5	0.12	30	PVC	0.01	8,435	262	1,349	3,363	39.9	SM14-Ex-EX154	
Kirkland_Main-2527	Kirkland_Manholes-1395	27.24	Kirkland_Manholes-739	26.87	399	0.09	30	PVC	0.01	7,287	264	1,358	3,373	46.3	SM14-Ex-EX154	
Kirkland_Main-2528	Kirkland_Manholes-739	26.87	Kirkland_Manholes-738	25.89	300.8	0.33	24	PVC	0.01	7,534	264	1,366	3,381	44.9		
Kirkland_Main-2532	Kirkland_Manholes-738	25.89	MH 05-714	25.01	257	0.34	24	PVC	0.01	7,724	286	1,415	3,453	44.7		Updated per as-built drawings
Kirkland_Main-2533	Kirkland_Manholes-736	28.45	Kirkland_Manholes-735	25.17	30.7	10.68	8	PVC	0.01	2,304	76	280	356	15.5		
Kirkland_Main-2534	Kirkland_Manholes-735	25.17	MH 05-714	25.01	98.1	0.16	24	PVC	0.01	5,330	998	2,052	3,050	57.2		Updated per as-built drawings
Kirkland_Main-2535	Kirkland_Manholes-1705	33.28	Kirkland_Manholes-757	27.8	142.4	3.85	8	PVC	0.01	1,383	17	33	50	3.6		
Kirkland_Main-2536	Kirkland_Manholes-757	27.8	Kirkland_Manholes-738	25.89	24.1	7.91	8	PVC	0.01	1,983	22	41	63	3.2		
Kirkland_Main-2537	Kirkland_Manholes-734	25.7	Kirkland_Manholes-735	25.17	249.9	0.21	24	PVC	0.01	6,079	922	1,763	2,685	44.2		
Kirkland_Main-2538	Kirkland_Manholes-732	47.45	Kirkland_Manholes-733	35.72	350.8	3.34	18	PVC	0.01	11,207	535	1,529	2,063	18.4		
Kirkland_Main-2539	Kirkland_Manholes-731	53.54	Kirkland_Manholes-732	47.45	265.7	2.29	18	PVC	0.01	9,278	439	1,520	1,959	21.1		
Kirkland_Main-2540	Kirkland_Manholes-729	64.46	Kirkland_Manholes-730	57.26	336.6	2.14	12	PVC	0.01	3,040	134	494	628	20.7		
Kirkland_Main-2541	Kirkland_Manholes-730	57.26	Kirkland_Manholes-731	53.54	101.9	3.65	18	PVC	0.01	11,709	340	1,055	1,394	11.9		
Kirkland_Main-2542	Kirkland_Manholes-1436	518.03	Kirkland_Manholes-1430	516.64	170	0.82	8	PVC	0.01	638	2	8	10	1.6		
Kirkland_Main-2543	Kirkland_Manholes-1434	511.6	Kirkland_Manholes-1431	510.8	175	0.46	8	PVC	0.01	477	10	33	43	9		
Kirkland_Main-2544	Kirkland_Manholes-1431	510.8	Kirkland_Manholes-1432	510.04	163.2	0.47	8	PVC	0.01	481	10	37	47	9.7		
Kirkland_Main-2545	Kirkland_Manholes-1432	510.04	Kirkland_Manholes-1433	509.55	97.9	0.5	8	PVC	0.01	499	12	41	52	10.5		
Kirkland_Main-2546	Kirkland_Manholes-1433	509.55	Kirkland_Manholes-1437	508.69	186	0.46	8	PVC	0.01	480	13	45	57	11.9		
Kirkland_Main-2547	Kirkland_Manholes-1435	519.8	Kirkland_Manholes-1436	518.03	159.8	1.11	8	PVC	0.01	742	2	4	6	0.8		
Kirkland_Main-2548	Kirkland_Manholes-1437	508.69	Kirkland_Manholes-1438	507.49	258.4	0.46	8	PVC	0.01	480	13	49	62	13		
Kirkland_Main-2549	Kirkland_Manholes-1438	507.49	Kirkland_Manholes-1444	505.53	236.5	0.83	8	PVC	0.01	642	19	73	92	14.3	SM14-Ex-EX269	

2021 (6-year) with Proposed Improvements - Peak Hour Flow - Pipe Capacity Table

Label	Upstream Node	Upstream Invert Elevation (ft)	Downstream Node	Downstream Invert Elevation (ft)	Length (ft)	Slope (%)	Diameter (in)	Material	Manning's n	Design Capacity (gpm)	Domestic Flow (gpm)	I/I Flow (gpm)	Total Flow (gpm)	Percent Full (%)	CIP No.	Notes
Kirkland_Main-2550	Kirkland_Manholes-1439	508.99	Kirkland_Manholes-1438	507.49	261.3	0.57	8	PVC	0.01	534	6	20	26	4.8	SM14-Ex-EX269	
Kirkland_Main-2551	Kirkland_Manholes-1441	509.69	Kirkland_Manholes-1440	509.16	212.6	0.25	8	PVC	0.01	352	5	12	17	4.9	SM14-Ex-EX269	
Kirkland_Main-2552	Kirkland_Manholes-1440	509.16	Kirkland_Manholes-1439	508.99	378	0.04	8	PVC	0.01	150	5	16	21	14.3	SM14-Ex-EX269	
Kirkland_Main-2554	Kirkland_Manholes-1449	498.19	Kirkland_Manholes-1450	496.32	291.2	0.64	8	PVC	0.01	565	26	130	156	27.7	SM14-Ex-EX269	
Kirkland_Main-2555	Kirkland_Manholes-1450	496.32	Kirkland_Manholes-1451	492.05	400.8	1.07	8	PVC	0.01	728	29	134	163	22.5	SM14-Ex-EX269	
Kirkland_Main-2556	Kirkland_Manholes-1448	502.55	Kirkland_Manholes-1449	498.19	186.7	2.34	8	PVC	0.01	1,078	25	126	151	14	SM14-Ex-EX269	
Kirkland_Main-2557	Kirkland_Manholes-1447	503.26	Kirkland_Manholes-1448	502.55	401.7	0.18	8	PVC	0.01	296	23	122	145	48.9	SM14-Ex-EX269	
Kirkland_Main-2558	Kirkland_Manholes-2976	503.85	Kirkland_Manholes-1447	503.26	210.4	0.28	8	PVC	0.01	373	22	118	140	37.5	SM14-Ex-EX269	
Kirkland_Main-2559	Kirkland_Manholes-1444	505.53	Kirkland_Manholes-1446	505.51	95.2	0.02	12	PVC	0.01	301	19	85	105	34.7	SM14-Ex-EX269	
Kirkland_Main-2560	Kirkland_Manholes-1446	505.51	Kirkland_Manholes-1445	504.92	12.7	4.66	8	PVC	0.01	1,523	19	90	109	7.1	SM14-Ex-EX269	
Kirkland_Main-2561	Kirkland_Manholes-1442	510.02	Kirkland_Manholes-1443	506.8	138.1	2.33	8	PVC	0.01	1,077	0	4	4	0.4	SM14-Ex-EX274	
Kirkland_Main-2562	Kirkland_Manholes-1443	506.8	Kirkland_Manholes-1444	505.53	203.3	0.62	8	PVC	0.01	557	0	8	8	1.5	SM14-Ex-EX274	
Kirkland_Main-2563	Kirkland_Manholes-1451	492.05	Kirkland_Manholes-1452	486.6	321.3	1.7	8	PVC	0.01	918	32	138	170	18.5	SM14-Ex-EX269	
Kirkland_Main-2564	Kirkland_Manholes-1452	486.6	Kirkland_Manholes-1459	479.42	322.1	2.23	8	PVC	0.01	1,053	33	142	176	16.7	SM14-Ex-EX269	
Kirkland_Main-2565	Kirkland_Manholes-1453	500.71	Kirkland_Manholes-1454	499.21	284.8	0.53	8	PVC	0.01	512	1	4	5	1.1	SM14-Ex-EX270	
Kirkland_Main-2566	Kirkland_Manholes-1454	499.21	Kirkland_Manholes-1455	496	348.8	0.92	8	PVC	0.01	676	4	8	12	1.7	SM14-Ex-EX270	
Kirkland_Main-2567	Kirkland_Manholes-1455	496	Kirkland_Manholes-1456	494.83	99.7	1.17	8	PVC	0.01	764	5	12	17	2.3	SM14-Ex-EX270	
Kirkland_Main-2568	Kirkland_Manholes-1456	494.83	Kirkland_Manholes-1457	481.56	320	4.15	8	PVC	0.01	1,436	7	16	23	1.6	SM14-Ex-EX270	
Kirkland_Main-2569	Kirkland_Manholes-1461	483.24	Kirkland_Manholes-1457	482.02	293.4	0.42	8	PVC	0.01	455	20	49	69	15.1	SM14-Ex-EX214	Drop Connection
Kirkland_Main-2570	Kirkland_Manholes-1457	481.56	Kirkland_Manholes-1458	481.15	103.4	0.4	8	PVC	0.01	444	27	69	96	21.7	SM14-Ex-EX214	
Kirkland_Main-2571	Kirkland_Manholes-1458	481.15	Kirkland_Manholes-1459	479.42	259.2	0.67	8	PVC	0.01	576	27	73	100	17.4	SM14-Ex-EX214	
Kirkland_Main-2572	Kirkland_Manholes-1459	479.42	Kirkland_Manholes-1480	465.84	411.8	3.3	8	PVC	0.01	1,280	61	220	280	21.9	SM14-Ex-EX214	
Kirkland_Main-2573	Kirkland_Manholes-1460	490.4	Kirkland_Manholes-1461	483.24	392	1.83	8	PVC	0.01	953	3	4	7	0.7	SM14-Ex-EX214	
Kirkland_Main-2574	Kirkland_Manholes-1469	490.09	Kirkland_Manholes-1461	483.24	144.8	4.73	8	PVC	0.01	1,534	17	37	53	3.5	SM14-Ex-EX271	
Kirkland_Main-2575	Kirkland_Manholes-608	134.68	Kirkland_Manholes-607	127.97	148.5	4.52	8	PVC	0.01	1,499	1	8	9	0.6	SM14-Ex-EX147	
Kirkland_Main-2576	Kirkland_Manholes-607	127.97	Kirkland_Manholes-606	111.69	332.5	4.9	8	PVC	0.01	1,560	4	16	21	1.3	SM14-Ex-EX147	
Kirkland_Main-2578	Kirkland_Manholes-3035	266.43	Kirkland_Manholes-1506	266.15	125.7	0.22	8	PVC	0.01	333	30	110	140	42.1		
Kirkland_Main-2579	Kirkland_Manholes-1504	267.51	Kirkland_Manholes-1505	267	104.1	0.49	8	PVC	0.01	493	24	85	110	22.3		
Kirkland_Main-2580	Kirkland_Manholes-1503	273.94	Kirkland_Manholes-1504	267.51	44	14.62	8	PVC	0.01	2,696	1	8	9	0.3		
Kirkland_Main-2581	Kirkland_Manholes-1502	279.47	Kirkland_Manholes-1503	273.94	90.7	6.09	8	PVC	0.01	1,741	0	4	5	0.3		
Kirkland_Main-2582	Kirkland_Manholes-1501	267.93	Kirkland_Manholes-1504	267.51	165.4	0.25	8	PVC	0.01	355	23	73	96	27.1		
Kirkland_Main-2583	Kirkland_Manholes-2255	245.88	Kirkland_Manholes-2253	239.74	232.2	2.64	8	PVC	0.01	1,146	33	4	37	3.3	SM14-Ex-EX247	
Kirkland_Main-2584	Kirkland_Manholes-1499	268.92	Kirkland_Manholes-1501	267.93	240	0.41	8	PVC	0.01	453	22	69	91	20.1		
Kirkland_Main-2585	Kirkland_Manholes-1500	287.29	Kirkland_Manholes-1498	284.32	146.8	2.02	8	PVC	0.01	1,003	0	4	4	0.4		
Kirkland_Main-2587	Kirkland_Manholes-1498	284.32	Kirkland_Manholes-1499	268.92	127.3	12.1	8	PVC	0.01	2,452	2	8	10	0.4		
Kirkland_Main-2588	Kirkland_Manholes-771	213.99	Kirkland_Manholes-777	184.25	152.4	19.51	8	PVC	0.01	3,115	3	8	11	0.3		
Kirkland_Main-2589	Kirkland_Manholes-777	184.25	KC_Manholes-6	163.9	254	8.01	8	PVC	0.01	1,995	5	12	17	0.9		
Kirkland_Main-2590	KC_Manholes-5	169.15	KC_Manholes-6	163.9	285.7	1.84	8	PVC	0.01	956	10	45	55	5.8		
Kirkland_Main-2591	KC_Manholes-6	163.9	O-17	159.86	90.8	4.45	8	PVC	0.01	1,487	17	61	78	5.2		
Kirkland_Main-2592	Kirkland_Manholes-766	182.72	Kirkland_Manholes-1555	164.48	325.6	5.6	8	PVC	0.01	1,669	2	8	10	0.6		
Kirkland_Main-2593	Kirkland_Manholes-1555	164.48	O-18	159.86	33.3	13.89	8	PVC	0.01	2,628	4	12	16	0.6		
Kirkland_Main-2594	Kirkland_Manholes-767	210.01	Kirkland_Manholes-766	182.72	125.5	21.75	8	PVC	0.01	3,288	1	4	5	0.1		
Kirkland_Main-2595	Kirkland_Manholes-765	257.59	Kirkland_Manholes-764	244.77	266.3	4.81	8	PVC	0.01	1,547	22	73	96	6.2	SM14-Ex-EX121	
Kirkland_Main-2596	Kirkland_Manholes-764	244.77	Kirkland_Manholes-1530	229.92	292.5	5.08	8	PVC	0.01	1,589	24	77	102	6.4	SM14-Ex-EX121	
Kirkland_Main-2597	Kirkland_Manholes-770	166.93	Kirkland_Manholes-769	165.1	146.5	1.25	8	PVC	0.01	788	1	8	9	1.2		
Kirkland_Main-2598	Kirkland_Manholes-769	165.1	Kirkland_Manholes-768	159.83	42.8	12.31	8	PVC	0.01	2,474	3	16	19	0.8		
Kirkland_Main-2599	Kirkland_Manholes-768	159.83	O-19	156.57	65.3	5	8	PVC	0.01	1,577	4	20	24	1.5		
Kirkland_Main-2600	Kirkland_Manholes-1600	216.22	Kirkland_Manholes-1599	200.11	155.5	10.36	8	PVC	0.01	2,269	2	4	6	0.3	SM14-Ex-EX170	
Kirkland_Main-2601	Kirkland_Manholes-1614	91.09	Kirkland_Manholes-1613	87.49	157.9	2.28	8	PVC	0.01	1,065	14	115	130	12.2	SM14-Ex-EX167	
Kirkland_Main-2602	Kirkland_Manholes-1616	135.79	Kirkland_Manholes-1615	109.23	291.4	9.11	8	PVC	0.01	2,128	3	8	11	0.5		
Kirkland_Main-2603	Kirkland_Manholes-1617	246.15	Kirkland_Manholes-1630	217.96	377.4	7.47	8	PVC	0.01	1,927	1	4	5	0.3		
Kirkland_Main-2604	Kirkland_Manholes-1618	259.44	Kirkland_Manholes-1619	255.5	286.6	1.37	8	PVC	0.01	827	1	4	5	0.6	SM14-Ex-EX176	
Kirkland_Main-2605	Kirkland_Manholes-1619	255.5	Kirkland_Manholes-1622	253.11	371.5	0.64	8	PVC	0.01	565	4	8	12	2.1	SM14-Ex-EX176	
Kirkland_Main-2607	Kirkland_Manholes-1620	234.07	Kirkland_Manholes-1621	227.94	53.2	11.53	8	PVC	0.01	2,394	2	4	6	0.3		
Kirkland_Main-2608	Kirkland_Manholes-1621	227.94	Kirkland_Manholes-1631	193.59	278.6	12.33	8	PVC	0.01	2,476	3	8	11	0.5		
Kirkland_Main-2609	Kirkland_Manholes-1623	294.92	Kirkland_Manholes-1622	253.11	447.9	9.33	8	PVC	0.01	2,154	252	826	1,078	50.1	SM7	
Kirkland_Main-2610	Kirkland_Manholes-1633	254.8	Kirkland_Manholes-1622	253.11	303.2	0.56	8	PVC	0.01	526	9	16	25	4.8	SM14-Ex-EX204	
Kirkland_Main-2611	Kirkland_Manholes-1626	191.61	Kirkland_Manholes-1624	183.67	177.3	4.48	8	PVC	0.01	1,492	8	24	33	2.2		
Kirkland_Main-2615	Kirkland_Manholes-1829	64.39	Kirkland_Manholes-1830	64.02	316.5	0.12	18	PVC	0.01	2,096	118	700	1,169	55.8	SM14-Ex-EX142	
Kirkland_Main-2616	Kirkland_Manholes-1830	64.02	Kirkland_Manholes-1400	61.37	81.5	3.25	18	PVC	0.01	11,049	118	709	1,177	10.7	SM14-Ex-EX142	
Kirkland_Main-2617	Kirkland_Manholes-1828	65.79	Kirkland_Manholes-1829	64.39	312.6	0.45	15	PVC	0.01	2,522	117	692	1,159	46	SM14-2035-DF11	
Kirkland_Main-2618	Kirkland_Manholes-1827	69.3	Kirkland_Manholes-2994	67.86	357.5	0.4	15	PVC	0.01	2,392	113	659	1,122	46.9		

2021 (6-year) with Proposed Improvements - Peak Hour Flow - Pipe Capacity Table

Label	Upstream Node	Upstream Invert Elevation (ft)	Downstream Node	Downstream Invert Elevation (ft)	Length (ft)	Slope (%)	Diameter (in)	Material	Manning's n	Design Capacity (gpm)	Domestic Flow (gpm)	I/I Flow (gpm)	Total Flow (gpm)	Percent Full (%)	CIP No.	Notes
Kirkland_Main-2619	Kirkland_Manholes-1826	70.81	Kirkland_Manholes-1827	69.3	214.2	0.71	15	PVC	0.01	3,165	111	651	1,112	35.1		
Kirkland_Main-2620	Kirkland_Manholes-1824	72.16	Kirkland_Manholes-1826	70.81	200.6	0.67	15	PVC	0.01	3,092	110	643	1,104	35.7		
Kirkland_Main-2621	Kirkland_Manholes-1823	74.67	Kirkland_Manholes-1824	72.16	26.9	9.32	8	PVC	0.01	2,153	8	33	41	1.9	SM10	
Kirkland_Main-2622	Kirkland_Manholes-1822	87.17	Kirkland_Manholes-1823	74.67	362.6	3.45	8	PVC	0.01	1,309	6	25	31	2.3	SM10	
Kirkland_Main-2623	Kirkland_Manholes-1821	94.43	Kirkland_Manholes-1822	87.17	350	2.07	8	PVC	0.01	1,015	5	16	21	2.1	SM10	
Kirkland_Main-2624	Kirkland_Manholes-1820	95.81	Kirkland_Manholes-1821	94.43	359.9	0.38	8	PVC	0.01	437	2	8	10	2.3	SM10	
Kirkland_Main-2625	Kirkland_Manholes-1819	89.53	Kirkland_Manholes-1402	82.36	241.2	2.97	8	PVC	0.01	1,216	7	16	24	2	SM10	
Kirkland_Main-2626	Kirkland_Manholes-1818	98.86	Kirkland_Manholes-1819	89.53	204	4.57	8	PVC	0.01	1,508	6	8	14	0.9	SM10	
Kirkland_Main-2628	Kirkland_Manholes-1811	129.72	Kirkland_Manholes-1812	126.33	178.5	1.9	8	PVC	0.01	972	17	82	99	10.2	SM10	
Kirkland_Main-2629	Kirkland_Manholes-1812	126.33	Kirkland_Manholes-1813	123.92	54.8	4.4	8	PVC	0.01	1,479	17	91	107	7.3	SM14-Ex-EX139	
Kirkland_Main-2630	Kirkland_Manholes-1813	123.92	Kirkland_Manholes-1814	117.44	111.3	5.82	8	PVC	0.01	1,701	18	99	117	6.9	SM14-Ex-EX139	
Kirkland_Main-2631	Kirkland_Manholes-1814	117.44	Kirkland_Manholes-1817	109.22	155.5	5.28	8	PVC	0.01	1,621	20	115	136	8.4	SM10	
Kirkland_Main-2632	Kirkland_Manholes-1815	130.16	Kirkland_Manholes-1814	117.44	475.8	2.67	8	PVC	0.01	1,153	2	8	10	0.9	SM10	
Kirkland_Main-2633	Kirkland_Manholes-1816	115.31	Kirkland_Manholes-1825	112.27	360.1	0.84	8	PVC	0.01	648	3	8	12	1.8	SM10	
Kirkland_Main-2634	Kirkland_Manholes-1817	109.22	Kirkland_Manholes-1805	101.51	328.6	2.35	8	PVC	0.01	1,080	20	124	144	13.3	SM10	
Kirkland_Main-2635	Kirkland_Manholes-1831	166.9	Kirkland_Manholes-1190	151.12	137.2	11.5	8	PVC	0.01	2,391	1	8	9	0.4	SM14-Ex-EX83	
Kirkland_Main-2636	Kirkland_Manholes-1837	12.2	Kirkland_Manholes-1836	11	9.3	12.92	12	PVC	0.01	7,473	455	786	1,241	16.6		
Kirkland_Main-2637	Kirkland_Manholes-1834	11.35	Kirkland_Manholes-1835	11.1	27.9	0.9	12	PVC	0.01	1,967	18	91	109	5.5		
Kirkland_Main-2638	Kirkland_Manholes-1835	11.1	Kirkland_Manholes-1836	11	9.8	1.02	12	PVC	0.01	2,099	18	97	115	5.5		
Kirkland_Main-2639	Kirkland_Manholes-1832	17.68	Kirkland_Manholes-1833	16.5	43.9	2.69	8	PVC	0.01	1,155	2	6	9	0.8		
Kirkland_Main-2640	Kirkland_Manholes-1794	12.63	Kirkland_Manholes-1837	12.2	128.1	0.34	15	PVC	0.01	2,183	455	779	1,234	56.5		
Kirkland_Main-2641	Kirkland_Manholes-2679	83.65	Kirkland_Manholes-2880	81.72	80.2	2.41	8	PVC	0.01	1,094	0	6	6	0.6		
Kirkland_Main-2642	Kirkland_Manholes-2880	81.72	Kirkland_Manholes-2879	68.04	76.6	17.86	8	PVC	0.01	2,979	28	31	58	1.9		
Kirkland_Main-2644	Kirkland_Manholes-2885	165.69	Kirkland_Manholes-1111	165.6	145.4	0.06	8	PVC	0.01	175	0	4	4	2.3	SM14-Ex-EX9	
Kirkland_Main-2658	Kirkland_Manholes-480	484.34	Kirkland_Manholes-1493	479.91	224.4	1.97	8	PVC	0.01	991	3	4	7	0.7		
Kirkland_Main-2659	Kirkland_Manholes-3042	194.23	Kirkland_Manholes-2474	188.45	173.4	3.33	8	PVC	0.01	1,287	1	4	5	0.4		
Kirkland_Main-2663	Kirkland_Manholes-2886	151	Kirkland_Manholes-252	142.57	290.9	2.9	8	PVC	0.01	1,200	0	4	4	0.4	SM14-Ex-EX40	
Kirkland_Main-2666	Kirkland_Manholes-2887	302.33	Kirkland_Manholes-2888	290.53	197	5.99	8	PVC	0.01	1,725	4	16	21	1.2		
Kirkland_Main-2667	Kirkland_Manholes-1181	120.04	Kirkland_Manholes-2889	83.33	400.3	9.17	8	PVC	0.01	2,135	3	9	12	0.6	SM10	
Kirkland_Main-2668	Kirkland_Manholes-2889	83.33	Kirkland_Manholes-305	74.69	164.1	5.26	8	PVC	0.01	1,618	6	18	24	1.5	SM10	
Kirkland_Main-2670	Kirkland_Manholes-1624	183.67	Kirkland_Manholes-1625	179.1	84.9	5.38	8	PVC	0.01	1,636	8	28	37	2.2		
Kirkland_Main-2671	Kirkland_Manholes-1632	181.73	Kirkland_Manholes-1625	179.1	96.8	2.72	8	PVC	0.01	1,162	3	16	20	1.7		
Kirkland_Main-2672	Kirkland_Manholes-1627	199.21	Kirkland_Manholes-1626	191.61	142.7	5.33	8	PVC	0.01	1,627	8	20	29	1.8		
Kirkland_Main-2673	Kirkland_Manholes-1628	203.71	Kirkland_Manholes-1627	199.21	47.7	9.43	8	PVC	0.01	2,165	7	16	24	1.1		
Kirkland_Main-2674	Kirkland_Manholes-1629	216.45	Kirkland_Manholes-1628	203.71	87.7	14.52	8	PVC	0.01	2,687	7	12	20	0.7		
Kirkland_Main-2675	Kirkland_Manholes-1630	217.96	Kirkland_Manholes-1629	216.45	15.3	9.86	8	PVC	0.01	2,214	2	8	10	0.4		
Kirkland_Main-2676	Kirkland_Manholes-1631	193.59	Kirkland_Manholes-1632	181.73	96.1	12.34	8	PVC	0.01	2,477	3	12	15	0.6		
Kirkland_Main-2677	Kirkland_Manholes-1712	141.37	Kirkland_Manholes-1706	124.78	325.1	5.1	8	PVC	0.01	1,593	1	8	10	0.6	SM14-Ex-EX166	
Kirkland_Main-2678	Kirkland_Manholes-1716	100.64	Kirkland_Manholes-1715	96.61	119	3.39	8	PVC	0.01	1,298	17	8	25	1.9		
Kirkland_Main-2679	Kirkland_Manholes-1715	96.61	Kirkland_Manholes-1714	94.78	31.8	5.76	8	PVC	0.01	1,692	17	16	33	2		
Kirkland_Main-2680	Kirkland_Manholes-1713	108.19	Kirkland_Manholes-1714	94.78	126.8	10.57	8	PVC	0.01	2,293	10	8	18	0.8	SM14-Ex-EX186	
Kirkland_Main-2681	Kirkland_Manholes-1714	94.78	Kirkland_Manholes-1717	58.55	387.3	9.35	8	PVC	0.01	2,156	27	33	60	2.8	SM14-Ex-EX186	
Kirkland_Main-2685	Kirkland_Manholes-1720	51.16	Kirkland_Manholes-1722	47.26	30.1	12.97	8	PVC	0.01	2,539	44	25	68	2.7		
Kirkland_Main-2686	Kirkland_Manholes-1721	54.75	Kirkland_Manholes-1720	51.16	58.7	6.12	8	PVC	0.01	1,744	44	16	60	3.5	SM14-Ex-EX185	
Kirkland_Main-2687	Kirkland_Manholes-1723	62.26	Kirkland_Manholes-1721	54.75	207.5	3.62	8	PVC	0.01	1,341	41	8	50	3.7	SM14-Ex-EX185	
Kirkland_Main-2688	Kirkland_Manholes-1711	136.47	Kirkland_Manholes-1710	134.24	160.1	1.39	12	PVC	0.01	2,453	12	74	86	3.5	SM14-Ex-EX196	
Kirkland_Main-2689	Kirkland_Manholes-1734	24.57	Kirkland_Manholes-1737	24.2	117	0.32	12	PVC	0.01	1,169	163	132	294	25.2		
Kirkland_Main-2690	Kirkland_Manholes-1735	26.22	Kirkland_Manholes-1734	24.57	115.4	1.43	12	PVC	0.01	2,488	50	25	74	3		
Kirkland_Main-2691	Kirkland_Manholes-1729	25.06	Kirkland_Manholes-1734	24.57	158.2	0.31	12	PVC	0.01	1,157	113	99	212	18.3		
Kirkland_Main-2692	Kirkland_Manholes-1730	26.2	Kirkland_Manholes-1729	25.06	35.3	3.23	8	PVC	0.01	1,268	20	33	53	4.2		
Kirkland_Main-2693	Kirkland_Manholes-1731	27.35	Kirkland_Manholes-1730	26.2	207.2	0.55	8	PVC	0.01	525	15	25	40	7.6		
Kirkland_Main-2694	Kirkland_Manholes-1732	28.2	Kirkland_Manholes-1731	27.35	54.4	1.56	8	PVC	0.01	882	7	16	24	2.7	SM14-Ex-EX156	
Kirkland_Main-2695	Kirkland_Manholes-1733	28.74	Kirkland_Manholes-1732	28.2	66.1	0.82	8	PVC	0.01	637	7	8	15	2.4	SM14-Ex-EX156	
Kirkland_Main-2696	Kirkland_Manholes-1743	28.04	Kirkland_Manholes-1746	27.54	238.6	0.21	15	PVC	0.01	1,725	324	569	893	51.7	SM14-Ex-EX157	
Kirkland_Main-2697	Kirkland_Manholes-1746	27.54	MH_Selection_06-13-2016-4	25.37	27.6	7.87	15	PVC	0.01	10,571	326	618	944	8.9	SM14-Ex-EX157	Updated per as-built drawings
Kirkland_Main-2700	Kirkland_Manholes-1745	27.57	Kirkland_Manholes-1746	27.54	73.9	0.04	8	PVC	0.01	142	2	41	43	30.1		
Kirkland_Main-2702	Kirkland_Manholes-1737	24.2	MH_Selection_06-13-2016-5	24.55	145.6	-0.24	12	PVC	0.01	1,019	173	140	313	30.7		Updated per as-built drawings
Kirkland_Main-2703	Kirkland_Manholes-1736	26.69	Kirkland_Manholes-1735	26.22	88.6	0.53	8	PVC	0.01	513	50	16	66	12.9		
Kirkland_Main-2704	Kirkland_Manholes-1752	27.81	Kirkland_Manholes-1736	26.69	254.8	0.44	8	PVC	0.01	467	4	8	13	2.7		
Kirkland_Main-2705	Kirkland_Manholes-1765	114.35	Kirkland_Manholes-1764	112.57	108.8	1.64	8	PVC	0.01	902	2	8	10	1.2		
Kirkland_Main-2706	Kirkland_Manholes-1764	112.57	Kirkland_Manholes-1763	111.41	74.1	1.57	8	PVC	0.01	882	8	16	24	2.7		
Kirkland_Main-2707	Kirkland_Manholes-1763	111.41	Kirkland_Manholes-1761	99.41	212.2	5.65	10	PVC	0.01	3,040	13	58	71	2.3		

2021 (6-year) with Proposed Improvements - Peak Hour Flow - Pipe Capacity Table

Label	Upstream Node	Upstream Invert Elevation (ft)	Downstream Node	Downstream Invert Elevation (ft)	Length (ft)	Slope (%)	Diameter (in)	Material	Manning's n	Design Capacity (gpm)	Domestic Flow (gpm)	I/I Flow (gpm)	Total Flow (gpm)	Percent Full (%)	CIP No.	Notes
Kirkland_Main-2708	Kirkland_Manholes-1761	99.41	Kirkland_Manholes-1762	98.88	52.5	1.01	12	PVC	0.01	2,089	33	198	231	11	SM14-Ex-EX166	
Kirkland_Main-2709	Kirkland_Manholes-1706	124.78	Kirkland_Manholes-1761	99.41	406.8	6.24	12	PVC	0.01	5,191	19	132	151	2.9	SM14-Ex-EX166	
Kirkland_Main-2710	Kirkland_Manholes-1766	113.7	Kirkland_Manholes-1763	111.41	43.4	5.28	8	PVC	0.01	1,620	6	33	39	2.4	SM14-Ex-EX168	
Kirkland_Main-2711	Kirkland_Manholes-1767	122.16	Kirkland_Manholes-1766	113.7	181	4.67	8	PVC	0.01	1,524	6	25	30	2	SM14-Ex-EX168	
Kirkland_Main-2712	Kirkland_Manholes-1674	78.95	Kirkland_Manholes-1774	71.66	398	1.83	8	PVC	0.01	954	73	206	279	29.3		
Kirkland_Main-2713	Kirkland_Manholes-1774	71.66	Kirkland_Manholes-1773	69.68	129.9	1.52	8	PVC	0.01	871	75	214	290	33.3		
Kirkland_Main-2714	Kirkland_Manholes-1773	69.68	Kirkland_Manholes-1772	68.31	220	0.62	8	PVC	0.01	556	83	222	306	55		
Kirkland_Main-2715	Kirkland_Manholes-1768	72.13	Kirkland_Manholes-1772	68.31	229.6	1.66	12	PVC	0.01	2,680	51	247	298	11.1	SM14-Ex-EX166	
Kirkland_Main-2716	Kirkland_Manholes-1775	102.05	Kirkland_Manholes-1771	101.91	35.5	0.4	8	PVC	0.01	446	5	8	14	3.1		Drop Connection
Kirkland_Main-2717	Kirkland_Manholes-1771	99.82	Kirkland_Manholes-1770	99.51	78	0.4	8	PVC	0.01	446	7	16	23	5.2		Drop Connection
Kirkland_Main-2718	Kirkland_Manholes-1770	92.14	Kirkland_Manholes-1769	80.52	165	7.04	8	PVC	0.01	1,871	8	25	32	1.7		
Kirkland_Main-2719	Kirkland_Manholes-1769	80.52	Kirkland_Manholes-1768	72.13	44.6	18.83	8	PVC	0.01	3,059	8	33	41	1.3		
Kirkland_Main-2720	Kirkland_Manholes-1762	98.88	Kirkland_Manholes-1768	72.13	281.2	9.51	12	PVC	0.01	6,412	33	206	239	3.7	SM14-Ex-EX166	
Kirkland_Main-2721	Kirkland_Manholes-1742	45.09	Kirkland_Manholes-1740	35.99	141.8	6.42	10	PVC	0.01	3,238	244	478	722	22.3		
Kirkland_Main-2722	Kirkland_Manholes-1741	41.4	Kirkland_Manholes-1740	35.99	19.3	27.98	8	PVC	0.01	3,729	80	74	154	4.1		
Kirkland_Main-2723	Kirkland_Manholes-1722	47.26	Kirkland_Manholes-1742	45.09	91	2.38	12	PVC	0.01	3,210	244	470	714	22.2		
Kirkland_Main-2724	Kirkland_Manholes-1760	56.49	Kirkland_Manholes-1722	47.26	220.7	4.18	10	PVC	0.01	2,614	200	437	637	24.4		
Kirkland_Main-2725	Kirkland_Manholes-2143	61.9	Kirkland_Manholes-1760	56.49	198.1	2.73	10	PVC	0.01	2,112	184	428	613	29		
Kirkland_Main-2726	Kirkland_Manholes-1738	34.54	Kirkland_Manholes-1728	26.2	233.5	3.57	8	PVC	0.01	1,333	34	16	51	3.8	SM14-Ex-EX184	
Kirkland_Main-2727	Kirkland_Manholes-1739	35.68	Kirkland_Manholes-1738	34.54	39.2	2.91	8	PVC	0.01	1,202	0	8	8	0.7	SM14-Ex-EX184	
Kirkland_Main-2730	Kirkland_Manholes-1783	44.54	Kirkland_Manholes-1784	44.07	47.4	1	8	PVC	0.01	705	74	66	140	19.8		
Kirkland_Main-2731	Kirkland_Manholes-1786	41.21	Kirkland_Manholes-733	35.72	39.3	13.98	10	PVC	0.01	4,780	306	99	404	8.5		
Kirkland_Main-2732	Kirkland_Manholes-1787	42.06	Kirkland_Manholes-1786	41.21	134.7	0.63	10	PVC	0.01	1,016	306	91	396	39		
Kirkland_Main-2733	Kirkland_Manholes-1785	42.96	Kirkland_Manholes-1787	42.06	131.8	0.68	10	PVC	0.01	1,056	304	82	387	36.6		
Kirkland_Main-2734	Kirkland_Manholes-1920	409.24	Kirkland_Manholes-2925	409	89.7	0.27	12	PVC	0.01	1,075	117	374	491	45.7	SM14-Ex-EX215	
Kirkland_Main-2735	Kirkland_Manholes-2925	409	Kirkland_Manholes-1921	405.86	161.9	1.94	8	PVC	0.01	982	118	378	496	50.5	SM14-Ex-EX215	
Kirkland_Main-2736	Kirkland_Manholes-1784	44.07	Kirkland_Manholes-1785	42.96	150	0.74	10	PVC	0.01	1,100	304	74	379	34.4		
Kirkland_Main-2737	Kirkland_Manholes-1782	44.9	Kirkland_Manholes-1783	44.54	88.3	0.4	8	PVC	0.01	446	74	58	131	29.4		
Kirkland_Main-2738	Kirkland_Manholes-1781	45.04	Kirkland_Manholes-1782	44.9	34.7	0.4	8	PVC	0.01	446	74	49	123	27.6		
Kirkland_Main-2739	Kirkland_Manholes-1777	45.35	Kirkland_Manholes-1781	45.04	78.1	0.4	8	PVC	0.01	446	74	41	115	25.8		
Kirkland_Main-2740	Kirkland_Manholes-1779	45.97	Kirkland_Manholes-1778	45.85	28.6	0.4	8	PVC	0.01	446	6	16	22	5		
Kirkland_Main-2741	Kirkland_Manholes-1778	45.85	Kirkland_Manholes-1777	45.35	126.1	0.4	8	PVC	0.01	446	70	25	95	21.3		
Kirkland_Main-2742	Kirkland_Manholes-1780	57.25	Kirkland_Manholes-1779	45.97	252.4	4.47	8	PVC	0.01	1,491	6	8	14	0.9		
Kirkland_Main-2743	Kirkland_Manholes-1776	46.25	Kirkland_Manholes-1777	45.35	244.9	0.37	8	PVC	0.01	428	3	8	11	2.7		
Kirkland_Main-2745	Kirkland_Manholes-1696	58.41	Kirkland_Manholes-1695	51.29	146.7	4.85	8	PVC	0.01	1,553	60	222	282	18.2	SM14-Ex-EX96	
Kirkland_Main-2746	Kirkland_Manholes-1695	51.29	Kirkland_Manholes-1694	44.12	135.5	5.29	8	PVC	0.01	1,622	64	231	294	18.1	SM14-Ex-EX96	
Kirkland_Main-2748	Kirkland_Manholes-2107	69.19	Kirkland_Manholes-2106	63.43	225	2.56	8	PVC	0.01	1,128	1	6	8	0.7	SM14-Ex-EX227	
Kirkland_Main-2749	Kirkland_Manholes-2108	68.46	Kirkland_Manholes-2109	59.77	298.6	2.91	8	PVC	0.01	1,203	59	147	206	17.1	SM14-Ex-EX222	
Kirkland_Main-2750	Kirkland_Manholes-2119	72.3	Kirkland_Manholes-2108	68.46	400.8	0.96	8	PVC	0.01	690	48	98	146	21.1	SM14-Ex-EX222	
Kirkland_Main-2751	Kirkland_Manholes-2511	85.9	Kirkland_Manholes-2108	85.31	148.4	0.4	8	PVC	0.01	446	11	43	54	12.1	SM14-Ex-EX229	Drop Connection
Kirkland_Main-2752	Kirkland_Manholes-2109	59.77	Kirkland_Manholes-2111	59.56	305.5	0.07	12	PVC	0.01	545	62	153	215	39.4	SM14-Ex-EX222	
Kirkland_Main-2753	Kirkland_Manholes-2110	60.2	Kirkland_Manholes-2111	59.56	55.5	1.15	8	PVC	0.01	757	14	37	51	6.7	SM14-Ex-EX232	
Kirkland_Main-2754	Kirkland_Manholes-2112	88.66	Kirkland_Manholes-2110	60.2	228.7	12.44	8	PVC	0.01	2,487	14	31	44	1.8	SM14-Ex-EX232	
Kirkland_Main-2755	Kirkland_Manholes-2115	91.85	Kirkland_Manholes-2112	88.66	62.8	5.08	8	PVC	0.01	1,589	9	24	34	2.1	SM14-Ex-EX232	
Kirkland_Main-2756	Kirkland_Manholes-2113	121.3	Kirkland_Manholes-2115	91.85	150.4	19.59	8	PVC	0.01	3,120	5	12	17	0.6	SM14-Ex-EX232	
Kirkland_Main-2757	Kirkland_Manholes-2114	121.77	Kirkland_Manholes-2113	121.3	207.4	0.23	8	PVC	0.01	336	4	6	10	2.9		
Kirkland_Main-2758	Kirkland_Manholes-2116	91.9	Kirkland_Manholes-2115	91.85	279.7	0.02	8	PVC	0.01	94	3	6	10	10.2	SM14-Ex-EX232	
Kirkland_Main-2759	Kirkland_Manholes-2146	75.22	Kirkland_Manholes-2117	74.65	143.2	0.4	8	PVC	0.01	446	32	86	118	26.4	SM14-Ex-EX222	Drop Connection
Kirkland_Main-2760	Kirkland_Manholes-2117	73.78	Kirkland_Manholes-2119	72.3	427.2	0.35	8	PVC	0.01	415	32	92	124	29.9	SM14-Ex-EX222	
Kirkland_Main-2761	Kirkland_Manholes-2445	191.11	Kirkland_Manholes-2490	173.27	210.3	8.48	8	PVC	0.01	2,053	22	69	91	4.5	SM14-Ex-EX243	
Kirkland_Main-2763	Kirkland_Manholes-2446	217.36	Kirkland_Manholes-2444	199.73	226.7	7.78	8	PVC	0.01	1,966	4	12	16	0.8	SM14-Ex-EX245	
Kirkland_Main-2765	Kirkland_Manholes-1862	286.87	Kirkland_Manholes-1863	286.75	31.1	0.4	8	PVC	0.01	446	72	134	206	46.2		Drop Connection
Kirkland_Main-2766	Kirkland_Manholes-1863	286.33	Kirkland_Manholes-1864	285.22	36.3	3.06	8	PVC	0.01	1,233	72	138	210	17.1		
Kirkland_Main-2767	Kirkland_Manholes-1864	285.22	Kirkland_Manholes-1866	277.54	215.1	3.57	8	PVC	0.01	1,332	77	151	228	17.1		
Kirkland_Main-2768	Kirkland_Manholes-1865	285.61	Kirkland_Manholes-1864	285.22	36.3	1.07	8	PVC	0.01	731	5	8	13	1.8		
Kirkland_Main-2769	Kirkland_Manholes-2770	287.2	Kirkland_Manholes-1865	285.61	339.1	0.47	8	PVC	0.01	483	5	4	9	1.8		
Kirkland_Main-2770	Kirkland_Manholes-1871	279.1	Kirkland_Manholes-1866	277.54	120.2	1.3	8	PVC	0.01	803	3	28	32	4		
Kirkland_Main-2771	Kirkland_Manholes-1866	277.54	Kirkland_Manholes-1867	276.54	31.1	3.22	8	PVC	0.01	1,264	81	183	264	20.9		
Kirkland_Main-2772	Kirkland_Manholes-1867	276.54	Kirkland_Manholes-1868	257.42	267.6	7.15	8	PVC	0.01	1,885	81	187	268	14.2		
Kirkland_Main-2773	Kirkland_Manholes-1868	257.42	Kirkland_Manholes-1888	254.12	73.1	4.51	10	PVC	0.01	2,715	132	269	401	14.8		
Kirkland_Main-2774	Kirkland_Manholes-1887	260.26	Kirkland_Manholes-1868	257.42	270	1.05	8	PVC	0.01	723	51	77	128	17.8		
Kirkland_Main-2775	Kirkland_Manholes-1869	292.56	Kirkland_Manholes-1870	286.99	206.4	2.7	8	PVC	0.01	1,158	3	4	7	0.6		

2021 (6-year) with Proposed Improvements - Peak Hour Flow - Pipe Capacity Table

Label	Upstream Node	Upstream Invert Elevation (ft)	Downstream Node	Downstream Invert Elevation (ft)	Length (ft)	Slope (%)	Diameter (in)	Material	Manning's n	Design Capacity (gpm)	Domestic Flow (gpm)	I/I Flow (gpm)	Total Flow (gpm)	Percent Full (%)	CIP No.	Notes
Kirkland_Main-2776	Kirkland_Manholes-1870	286.99	Kirkland_Manholes-1871	279.1	130.7	6.04	8	PVC	0.01	1,732	3	8	11	0.7		
Kirkland_Main-2777	Kirkland_Manholes-1872	282.33	Kirkland_Manholes-1871	279.1	27.4	11.77	8	PVC	0.01	2,419	0	16	16	0.7		
Kirkland_Main-2778	Kirkland_Manholes-1896	286.15	Kirkland_Manholes-1872	282.33	252.6	1.51	8	PVC	0.01	867	0	12	12	1.4		
Kirkland_Main-2779	Kirkland_Manholes-1895	288.31	Kirkland_Manholes-1896	286.15	156.7	1.38	8	PVC	0.01	828	0	8	8	1		
Kirkland_Main-2781	Kirkland_Manholes-1894	292.07	Kirkland_Manholes-1895	288.31	37.7	9.98	8	PVC	0.01	2,227	0	4	4	0.2		
Kirkland_Main-2785	Kirkland_Manholes-1893	314.62	Kirkland_Manholes-1892	301.26	174.3	7.66	8	PVC	0.01	1,952	24	33	57	2.9		
Kirkland_Main-2786	Kirkland_Manholes-1892	301.26	Kirkland_Manholes-1882	297.55	110.1	3.37	8	PVC	0.01	1,294	27	41	68	5.2		
Kirkland_Main-2787	Kirkland_Manholes-1882	297.55	Kirkland_Manholes-1885	271.65	301.6	8.59	8	PVC	0.01	2,066	33	45	78	3.8		
Kirkland_Main-2788	Kirkland_Manholes-1883	295.15	Kirkland_Manholes-1885	271.65	83.7	28.09	8	PVC	0.01	3,737	9	20	29	0.8		
Kirkland_Main-2789	Kirkland_Manholes-1889	296.4	Kirkland_Manholes-1883	295.15	155.2	0.81	8	PVC	0.01	633	9	16	25	4		
Kirkland_Main-2790	Kirkland_Manholes-1884	299.38	Kirkland_Manholes-1889	296.4	51.3	5.81	8	PVC	0.01	1,699	5	12	17	1		
Kirkland_Main-2791	Kirkland_Manholes-1891	305.89	Kirkland_Manholes-1890	303.36	105.7	2.39	8	PVC	0.01	1,091	4	4	8	0.7		
Kirkland_Main-2792	Kirkland_Manholes-1890	303.36	Kirkland_Manholes-1884	299.38	71.4	5.58	8	PVC	0.01	1,665	5	8	13	0.8		
Kirkland_Main-2793	Kirkland_Manholes-1885	271.65	Kirkland_Manholes-1886	262.12	238.5	4	8	PVC	0.01	1,409	50	69	119	8.4		
Kirkland_Main-2794	Kirkland_Manholes-1886	262.12	Kirkland_Manholes-1887	260.26	298.4	0.62	8	PVC	0.01	557	50	73	123	22.1		
Kirkland_Main-2795	Kirkland_Manholes-1888	254.12	Kirkland_Manholes-1897	245.38	209.5	4.17	8	PVC	0.01	1,440	156	317	474	32.9		
Kirkland_Main-2796	Kirkland_Manholes-1877	246.77	Kirkland_Manholes-1873	243.35	391.2	0.87	8	PVC	0.01	659	64	122	186	28.3		
Kirkland_Main-2797	Kirkland_Manholes-1873	243.35	Kirkland_Manholes-1874	243.32	295.9	0.01	24	PVC	0.01	1,329	221	448	668	50.3	SM14-Ex-EX134	
Kirkland_Main-2798	Kirkland_Manholes-1875	249.18	Kirkland_Manholes-1876	247.77	111.8	1.26	8	PVC	0.01	792	25	4	29	3.7		
Kirkland_Main-2799	Kirkland_Manholes-1876	247.77	Kirkland_Manholes-1877	246.77	320.2	0.31	8	PVC	0.01	394	25	16	42	10.6		
Kirkland_Main-2800	Kirkland_Manholes-1878	249.88	Kirkland_Manholes-1877	246.77	242.5	1.28	8	PVC	0.01	798	39	102	140	17.6		
Kirkland_Main-2801	Kirkland_Manholes-1874	243.32	Kirkland_Manholes-1571	242.76	271.1	0.21	15	PVC	0.01	1,713	221	452	672	39.3		
Kirkland_Main-2802	Kirkland_Manholes-1881	267.11	Kirkland_Manholes-1879	258.08	239.4	3.77	8	PVC	0.01	1,369	36	90	126	9.2		
Kirkland_Main-2803	Kirkland_Manholes-1880	260.03	Kirkland_Manholes-1879	258.08	143.3	1.36	8	PVC	0.01	822	2	4	6	0.8		
Kirkland_Main-2805	Kirkland_Manholes-1879	258.08	Kirkland_Manholes-1878	249.88	231.7	3.54	8	PVC	0.01	1,326	39	98	136	10.3		
Kirkland_Main-2806	Kirkland_Manholes-1897	245.38	Kirkland_Manholes-1873	243.35	282.6	0.72	10	PVC	0.01	1,084	156	321	478	44.1		
Kirkland_Main-2807	Kirkland_Manholes-1902	406.33	Kirkland_Manholes-1899	405.32	253.1	0.4	8	PVC	0.01	447	1	4	5	1.2		
Kirkland_Main-2808	Kirkland_Manholes-1899	405.32	Kirkland_Manholes-1898	404.75	141.4	0.4	8	PVC	0.01	446	2	8	10	2.2		
Kirkland_Main-2809	Kirkland_Manholes-1898	404.75	Kirkland_Manholes-1900	402.51	135.8	1.65	8	PVC	0.01	905	3	12	15	1.7		
Kirkland_Main-2810	Kirkland_Manholes-1900	402.51	Kirkland_Manholes-1901	396.95	219.6	2.53	8	PVC	0.01	1,122	5	16	21	1.9		
Kirkland_Main-2811	Kirkland_Manholes-1901	396.95	Kirkland_Manholes-1905	395.5	142.8	1.02	8	PVC	0.01	711	5	20	26	3.6		
Kirkland_Main-2812	Kirkland_Manholes-1903	399.77	Kirkland_Manholes-1904	399.67	107.5	0.09	8	PVC	0.01	215	4	12	16	7.5		
Kirkland_Main-2813	Kirkland_Manholes-1904	399.67	Kirkland_Manholes-1905	395.5	126.3	3.3	8	PVC	0.01	1,281	5	16	21	1.7		
Kirkland_Main-2814	Kirkland_Manholes-2220	93.99	Kirkland_Manholes-2219	92.24	194.8	0.9	8	PVC	0.01	668	1	6	7	1.1		
Kirkland_Main-2815	Kirkland_Manholes-2219	92.24	Kirkland_Manholes-2218	82.71	300.9	3.17	8	PVC	0.01	1,255	3	13	16	1.3		
Kirkland_Main-2824	Kirkland_Manholes-2222	72.19	Kirkland_Manholes-2221	60.29	232.5	5.12	8	PVC	0.01	1,595	4	19	23	1.5		
Kirkland_Main-2825	Kirkland_Manholes-2223	75.05	Kirkland_Manholes-2222	72.19	181.6	1.58	8	PVC	0.01	885	2	13	15	1.7		
Kirkland_Main-2826	Kirkland_Manholes-2224	76.4	Kirkland_Manholes-2223	75.05	210.4	0.64	8	PVC	0.01	565	1	6	7	1.3		
Kirkland_Main-2829	Kirkland_Manholes-2233	60.15	Kirkland_Manholes-2232	48.59	76.7	15.07	8	PVC	0.01	2,737	16	6	23	0.8		
Kirkland_Main-2830	Kirkland_Manholes-2232	48.59	Kirkland_Manholes-2231	25.71	219.7	10.42	8	PVC	0.01	2,275	17	13	30	1.3		
Kirkland_Main-2831	Kirkland_Manholes-2231	25.71	Kirkland_Manholes-2230	23.3	56.5	4.26	8	PVC	0.01	1,456	17	19	36	2.5		
Kirkland_Main-2832	Kirkland_Manholes-2230	23.3	Kirkland_Manholes-2229	22.53	34.1	2.26	8	PVC	0.01	1,060	17	32	49	4.6		
Kirkland_Main-2833	Kirkland_Manholes-2210	47.75	Kirkland_Manholes-2205	23.1	33.9	72.62	8	PVC	0.01	6,008	7	26	33	0.6	SM14-Ex-EX189	Slope verified in as-builts
Kirkland_Main-2834	Kirkland_Manholes-2211	51.73	Kirkland_Manholes-2210	47.75	86.6	4.6	8	PVC	0.01	1,512	7	19	27	1.8		
Kirkland_Main-2835	Kirkland_Manholes-2207	54.13	Kirkland_Manholes-2211	51.73	163.6	1.47	8	PVC	0.01	854	0	13	13	1.6		
Kirkland_Main-2836	Kirkland_Manholes-2206	66.42	Kirkland_Manholes-2198	65.46	282.2	0.34	8	PVC	0.01	411	2	16	18	4.4	SM8	
Kirkland_Main-2837	Kirkland_Manholes-2198	65.46	Kirkland_Manholes-2193	64.5	239.8	0.4	8	PVC	0.01	446	4	25	28	6.3	SM14-Ex-EX187	
Kirkland_Main-2839	Kirkland_Manholes-2084	179.07	Kirkland_Manholes-2069	170.43	427.7	2.02	12	PVC	0.01	2,954	70	73	144	4.9	SM14-Ex-EX199	
Kirkland_Main-2840	Kirkland_Manholes-2085	183.55	Kirkland_Manholes-2084	179.07	426.7	1.05	12	PVC	0.01	2,130	70	69	139	6.5	SM14-Ex-EX199	
Kirkland_Main-2841	Kirkland_Manholes-2086	187.61	Kirkland_Manholes-2085	183.55	445.4	0.91	12	PVC	0.01	1,985	68	65	133	6.7	SM1	
Kirkland_Main-2842	Kirkland_Manholes-2074	213.49	Kirkland_Manholes-2086	187.61	333.1	7.77	8	PVC	0.01	1,965	51	53	104	5.3	SM14-Ex-EX246	
Kirkland_Main-2843	Kirkland_Manholes-2087	189.64	Kirkland_Manholes-2086	187.61	250.4	0.81	12	PVC	0.01	1,872	9	8	17	0.9	SM1	
Kirkland_Main-2844	Kirkland_Manholes-2301	194.13	Kirkland_Manholes-2087	189.64	258.5	1.74	12	PVC	0.01	2,740	0	4	4	0.2	SM1	
Kirkland_Main-2845	Kirkland_Manholes-2838	108.96	Kirkland_Manholes-2837	104.37	77.8	5.9	8	PVC	0.01	1,712	6	6	12	0.7		
Kirkland_Main-2846	Kirkland_Manholes-2837	104.37	Kirkland_Manholes-2836	60.97	275.8	15.74	8	PVC	0.01	2,797	6	12	18	0.6		
Kirkland_Main-2847	Kirkland_Manholes-2834	37.62	Kirkland_Manholes-2849	29.21	55.8	15.07	12	PVC	0.01	8,071	36	128	164	2	SM14-Ex-EX316	
Kirkland_Main-2848	Kirkland_Manholes-2833	29.99	Kirkland_Manholes-2849	29.21	264.4	0.3	18	PVC	0.01	3,329	474	1,077	1,622	48.7	SM14-Ex-EX309	
Kirkland_Main-2849	Kirkland_Manholes-2849	29.21	Kirkland_Manholes-2848	28.9	205.9	0.15	24	PVC	0.01	5,112	509	1,211	1,792	35.1	SM14-Ex-EX309	Drop Connection
Kirkland_Main-2850	Kirkland_Manholes-2848	27.55	Kirkland_Manholes-2842	26.9	429.8	0.15	24	PVC	0.01	5,133	514	1,217	1,802	35.1	SM14-Ex-EX309	
Kirkland_Main-2851	Kirkland_Manholes-1941	361.64	Kirkland_Manholes-1942	350.59	169	6.54	8	PVC	0.01	1,803	3	8	11	0.6		
Kirkland_Main-2852	Kirkland_Manholes-1943	356.18	Kirkland_Manholes-1942	350.59	121.8	4.59	8	PVC	0.01	1,511	0	4	4	0.3		
Kirkland_Main-2853	Kirkland_Manholes-1942	350.59	Kirkland_Manholes-1577	341.43	212	4.32	8	PVC	0.01	1,465	3	16	19	1.3		

2021 (6-year) with Proposed Improvements - Peak Hour Flow - Pipe Capacity Table

Label	Upstream Node	Upstream Invert Elevation (ft)	Downstream Node	Downstream Invert Elevation (ft)	Length (ft)	Slope (%)	Diameter (in)	Material	Manning's n	Design Capacity (gpm)	Domestic Flow (gpm)	I/I Flow (gpm)	Total Flow (gpm)	Percent Full (%)	CIP No.	Notes
Kirkland_Main-2854	Kirkland_Manholes-1944	388.13	Kirkland_Manholes-1945	370.88	207.3	8.32	8	PVC	0.01	2,034	0	4	5	0.2		
Kirkland_Main-2855	Kirkland_Manholes-1945	370.88	Kirkland_Manholes-1946	363.75	185.3	3.85	8	PVC	0.01	1,383	2	8	10	0.7		
Kirkland_Main-2856	Kirkland_Manholes-1946	363.75	Kirkland_Manholes-1947	358.01	122.1	4.7	8	PVC	0.01	1,529	2	12	14	0.9		
Kirkland_Main-2857	Kirkland_Manholes-1947	358.01	Kirkland_Manholes-1948	350.2	125.9	6.2	8	PVC	0.01	1,756	2	16	19	1.1		
Kirkland_Main-2858	Kirkland_Manholes-1949	352.67	Kirkland_Manholes-1948	350.2	274.7	0.9	8	PVC	0.01	669	2	4	6	0.9		
Kirkland_Main-2859	Kirkland_Manholes-1948	350.2	Kirkland_Manholes-1950	344.53	121.4	4.67	8	PVC	0.01	1,524	6	24	30	2		
Kirkland_Main-2860	Kirkland_Manholes-1950	344.53	Kirkland_Manholes-1893	314.62	313.2	9.55	8	PVC	0.01	2,179	7	28	35	1.6		
Kirkland_Main-2861	Kirkland_Manholes-1952	275.36	Kirkland_Manholes-1951	275.06	208.2	0.14	8	PVC	0.01	268	4	41	45	16.7		
Kirkland_Main-2862	Kirkland_Manholes-1953	290.71	Kirkland_Manholes-1952	275.36	336.8	4.56	8	PVC	0.01	1,505	4	37	41	2.7		
Kirkland_Main-2863	Kirkland_Manholes-1957	343.4	Kirkland_Manholes-1956	335.87	142.5	5.28	8	PVC	0.01	1,620	0	4	4	0.3		
Kirkland_Main-2864	Kirkland_Manholes-1956	335.87	Kirkland_Manholes-1955	335.45	105.5	0.4	8	PVC	0.01	446	0	8	8	1.8		
Kirkland_Main-2865	Kirkland_Manholes-1975	436.73	Kirkland_Manholes-1974	432	247.5	1.91	8	PVC	0.01	975	25	126	151	15.5		
Kirkland_Main-2866	Kirkland_Manholes-1976	440.77	Kirkland_Manholes-1975	436.73	231.1	1.75	8	PVC	0.01	932	11	41	51	5.5		
Kirkland_Main-2867	Kirkland_Manholes-1978	440.32	Kirkland_Manholes-1975	436.73	342.8	1.05	8	PVC	0.01	721	13	81	95	13.1		
Kirkland_Main-2868	Kirkland_Manholes-1977	454.61	Kirkland_Manholes-1976	440.77	262.5	5.27	8	PVC	0.01	1,619	7	33	39	2.4		
Kirkland_Main-2869	Kirkland_Manholes-1980	464.9	Kirkland_Manholes-1977	454.61	328.6	3.13	8	PVC	0.01	1,248	5	24	29	2.3		
Kirkland_Main-2870	Kirkland_Manholes-1979	446.84	Kirkland_Manholes-1978	440.32	179.3	3.64	8	PVC	0.01	1,345	2	4	6	0.5		
Kirkland_Main-2871	Kirkland_Manholes-1984	465.6	Kirkland_Manholes-1980	464.9	159.8	0.44	8	PVC	0.01	467	3	16	20	4.2		
Kirkland_Main-2872	Kirkland_Manholes-1982	470.94	Kirkland_Manholes-1980	464.9	329.7	1.83	8	PVC	0.01	954	1	4	5	0.5		
Kirkland_Main-2873	Kirkland_Manholes-1985	470.88	Kirkland_Manholes-1981	467.1	204.6	1.85	8	PVC	0.01	958	1	4	5	0.5		
Kirkland_Main-2874	Kirkland_Manholes-1986	467.24	Kirkland_Manholes-1981	467.1	144.7	0.1	8	PVC	0.01	219	0	4	4	2		
Kirkland_Main-2875	Kirkland_Manholes-1983	469.93	Kirkland_Manholes-2019	467.83	75.8	2.77	8	PVC	0.01	1,174	1	4	5	0.4		
Kirkland_Main-2876	Kirkland_Manholes-1981	467.1	Kirkland_Manholes-1984	465.6	153	0.98	8	PVC	0.01	698	2	12	14	2		
Kirkland_Main-2877	Kirkland_Manholes-1987	443.37	Kirkland_Manholes-1976	440.77	252.9	1.03	8	PVC	0.01	715	2	4	6	0.8		
Kirkland_Main-2878	Kirkland_Manholes-2002	429.3	Kirkland_Manholes-2000	426.18	243.7	1.28	8	PVC	0.01	798	1	8	9	1.1	SM14-Ex-EX209	
Kirkland_Main-2879	Kirkland_Manholes-2000	426.18	Kirkland_Manholes-2001	424.5	24.1	6.98	8	PVC	0.01	1,863	15	65	80	4.3	SM14-Ex-EX209	
Kirkland_Main-2880	Kirkland_Manholes-1999	430.91	Kirkland_Manholes-2000	426.18	304.8	1.55	8	PVC	0.01	878	14	53	67	7.7	SM14-Ex-EX211	
Kirkland_Main-2881	Kirkland_Manholes-2001	424.5	Kirkland_Manholes-2063	422.68	357.6	0.51	8	PVC	0.01	503	15	69	84	16.7	SM14-Ex-EX209	
Kirkland_Main-2882	Kirkland_Manholes-2003	431.01	Kirkland_Manholes-2002	429.3	155.3	1.1	8	PVC	0.01	740	0	4	4	0.6		
Kirkland_Main-2883	Kirkland_Manholes-2015	418.27	Kirkland_Manholes-2014	416.63	83.6	1.96	8	PVC	0.01	988	24	90	114	11.5		
Kirkland_Main-2884	Kirkland_Manholes-2014	416.63	Kirkland_Manholes-2013	413.74	146.6	1.97	8	PVC	0.01	990	25	94	118	12		
Kirkland_Main-2886	Kirkland_Manholes-2010	424.43	Kirkland_Manholes-2016	421.46	333.6	0.89	8	PVC	0.01	665	21	81	102	15.4		
Kirkland_Main-2887	Kirkland_Manholes-2016	421.46	Kirkland_Manholes-2015	418.27	330.4	0.97	8	PVC	0.01	693	23	85	108	15.6		
Kirkland_Main-2889	Kirkland_Manholes-2021	473.17	Kirkland_Manholes-2020	468.34	27.5	17.56	8	PVC	0.01	2,954	29	94	123	4.2		
Kirkland_Main-2890	Kirkland_Manholes-2020	468.34	Kirkland_Manholes-2019	467.83	127.5	0.4	10	PVC	0.01	809	120	244	364	45		
Kirkland_Main-2891	Kirkland_Manholes-2023	466.76	Kirkland_Manholes-2022	466	41.6	1.83	8	PVC	0.01	953	9	20	29	3.1		
Kirkland_Main-2892	Kirkland_Manholes-2037	465.67	Kirkland_Manholes-2036	452.58	367.2	3.57	8	PVC	0.01	1,331	11	16	27	2	SM14-Ex-EX266	
Kirkland_Main-2893	Kirkland_Manholes-2041	465.42	Kirkland_Manholes-2042	455.6	502.4	1.95	8	PVC	0.01	986	2	4	6	0.6	SM14-Ex-EX265	
Kirkland_Main-2894	Kirkland_Manholes-2042	455.6	Kirkland_Manholes-2043	454.68	150.3	0.61	12	PVC	0.01	1,626	78	285	363	22.3	SM14-Ex-EX214	
Kirkland_Main-2895	Kirkland_Manholes-2044	435.14	Kirkland_Manholes-2045	432.5	20.8	12.67	12	PVC	0.01	7,399	81	293	374	5	SM14-Ex-EX214	
Kirkland_Main-2896	Kirkland_Manholes-2043	454.68	Kirkland_Manholes-2044	435.14	356.2	5.49	12	PVC	0.01	4,869	79	289	368	7.6	SM14-Ex-EX214	
Kirkland_Main-2897	Kirkland_Manholes-2046	437.24	Kirkland_Manholes-2045	432.5	199.5	2.38	10	PVC	0.01	1,970	153	346	499	25.3		
Kirkland_Main-2898	Kirkland_Manholes-2047	441.15	Kirkland_Manholes-2046	437.24	49.2	7.95	10	PVC	0.01	3,605	152	342	494	13.7		
Kirkland_Main-2899	Kirkland_Manholes-2048	442.51	Kirkland_Manholes-2047	441.15	76.6	1.77	8	PVC	0.01	939	152	338	490	52.1	SM14-Ex-EX264	
Kirkland_Main-2900	Kirkland_Manholes-2049	454.48	Kirkland_Manholes-2050	439.64	163.1	9.1	8	PVC	0.01	2,126	2	4	6	0.3	SM14-Ex-EX263	
Kirkland_Main-2901	Kirkland_Manholes-2050	439.64	Kirkland_Manholes-2051	434.18	313	1.74	8	PVC	0.01	931	3	8	12	1.2	SM14-Ex-EX263	
Kirkland_Main-2902	Kirkland_Manholes-2051	434.18	Kirkland_Manholes-2054	429.73	307.2	1.45	8	PVC	0.01	849	5	12	18	2.1	SM14-Ex-EX263	
Kirkland_Main-2903	Kirkland_Manholes-2053	424.91	Kirkland_Manholes-2285	419.89	165.8	3.03	8	PVC	0.01	1,227	1	4	5	0.4	SM14-Ex-EX248	
Kirkland_Main-2904	Kirkland_Manholes-2054	429.73	Kirkland_Manholes-2055	427.92	21.3	8.48	8	PVC	0.01	2,053	6	16	22	1.1		
Kirkland_Main-2905	Kirkland_Manholes-3044	18.06	Kirkland_Manholes-2736	17.76	69.7	0.43	18	PVC	0.01	4,020	240	519	759	18.9	SM14-Ex-EX289	
Kirkland_Main-2906	Kirkland_Manholes-2045	432.5	Kirkland_Manholes-2055	427.92	351.4	1.3	10	PVC	0.01	1,460	235	643	878	60.1		
Kirkland_Main-2907	Kirkland_Manholes-2057	422.6	Kirkland_Manholes-2056	422.2	14.4	2.79	10	PVC	0.01	2,134	255	680	934	43.8		
Kirkland_Main-2908	Kirkland_Manholes-1848	462	Kirkland_Manholes-1216	443.89	186.3	9.72	8	PVC	0.01	2,198	2	4	6	0.3		
Kirkland_Main-2909	Kirkland_Manholes-2056	422.2	Kirkland_Manholes-2285	419.89	62.2	3.71	8	PVC	0.01	1,359	255	684	939	69.1		
Kirkland_Main-2910	Kirkland_Manholes-2058	427.27	Kirkland_Manholes-2057	422.6	119.2	3.92	10	PVC	0.01	2,531	254	675	930	36.7		
Kirkland_Main-2911	Kirkland_Manholes-2055	427.92	Kirkland_Manholes-2058	427.27	53.1	1.22	10	PVC	0.01	1,414	241	663	904	63.9		
Kirkland_Main-2912	Kirkland_Manholes-2059	433	Kirkland_Manholes-2058	427.27	231.2	2.48	8	PVC	0.01	1,110	14	8	22	2	SM14-Ex-EX213	
Kirkland_Main-2913	Kirkland_Manholes-3082	428.49	Kirkland_Manholes-1992	427.27	187.8	0.65	8	PVC	0.01	568	3	8	11	2		
Kirkland_Main-2914	Kirkland_Manholes-1992	427.27	Kirkland_Manholes-2009	426.97	143.6	0.21	8	PVC	0.01	322	13	49	61	19.1		
Kirkland_Main-2915	Kirkland_Manholes-1991	431.18	Kirkland_Manholes-1992	427.27	327	1.2	8	PVC	0.01	771	10	37	46	6		
Kirkland_Main-2916	Kirkland_Manholes-2004	427.75	Kirkland_Manholes-2010	424.43	322.6	1.03	8	PVC	0.01	715	5	24	29	4.1		
Kirkland_Main-2917	Kirkland_Manholes-2007	429.08	Kirkland_Manholes-2004	427.75	98.7	1.35	8	PVC	0.01	819	5	20	25	3.1		

2021 (6-year) with Proposed Improvements - Peak Hour Flow - Pipe Capacity Table

Label	Upstream Node	Upstream Invert Elevation (ft)	Downstream Node	Downstream Invert Elevation (ft)	Length (ft)	Slope (%)	Diameter (in)	Material	Manning's n	Design Capacity (gpm)	Domestic Flow (gpm)	I/I Flow (gpm)	Total Flow (gpm)	Percent Full (%)	CIP No.	Notes
Kirkland_Main-2918	Kirkland_Manholes-2260	285.07	Kirkland_Manholes-2259	272.05	278.2	4.68	12	PVC	0.01	4,497	295	875	1,170	26	SM14-Ex-EX248	
Kirkland_Main-2919	Kirkland_Manholes-2259	272.05	Kirkland_Manholes-2258	263.77	196.6	4.21	12	PVC	0.01	4,266	301	883	1,184	27.7	SM14-Ex-EX248	
Kirkland_Main-2920	Kirkland_Manholes-2323	247.45	Kirkland_Manholes-2324	245.37	33.9	6.13	8	PVC	0.01	1,746	40	134	174	10		
Kirkland_Main-2921	Kirkland_Manholes-2322	259.98	Kirkland_Manholes-2323	247.45	184.9	6.78	8	PVC	0.01	1,836	39	130	169	9.2	SM14-Ex-EX252	
Kirkland_Main-2922	Kirkland_Manholes-2325	246.61	Kirkland_Manholes-2324	245.37	131.1	0.95	8	PVC	0.01	686	5	12	17	2.5		
Kirkland_Main-2923	Kirkland_Manholes-2329	258.36	Kirkland_Manholes-2325	246.61	302.7	3.88	8	PVC	0.01	1,389	4	8	12	0.9		
Kirkland_Main-2924	Kirkland_Manholes-2328	273.89	Kirkland_Manholes-2329	258.36	228.5	6.8	8	PVC	0.01	1,838	2	4	6	0.3		
Kirkland_Main-2925	Kirkland_Manholes-2339	347.35	Kirkland_Manholes-2337	345.83	131	1.16	8	PVC	0.01	760	3	8	11	1.5	SM14-Ex-EX256	
Kirkland_Main-2926	Kirkland_Manholes-2337	345.83	Kirkland_Manholes-2338	328.54	114.6	15.08	8	PVC	0.01	2,738	5	12	17	0.6	SM14-Ex-EX256	
Kirkland_Main-2927	Kirkland_Manholes-2334	313.34	Kirkland_Manholes-2333	308.81	129.8	3.49	8	PVC	0.01	1,317	28	77	105	8	SM14-Ex-EX252	
Kirkland_Main-2928	Kirkland_Manholes-2333	308.81	Kirkland_Manholes-2332	296.43	179.4	6.9	8	PVC	0.01	1,852	29	81	110	5.9	SM14-Ex-EX252	
Kirkland_Main-2929	Kirkland_Manholes-2332	296.43	Kirkland_Manholes-2331	295.51	98.1	0.94	8	PVC	0.01	683	31	90	121	17.7	SM14-Ex-EX252	
Kirkland_Main-2930	Kirkland_Manholes-2718	21.4	Kirkland_Manholes-2721	21.2	187	0.11	12	PVC	0.01	680	83	37	120	17.7	SM14-Ex-EX289	
Kirkland_Main-2931	Kirkland_Manholes-2331	295.51	Kirkland_Manholes-2330	295.18	115.3	0.29	8	PVC	0.01	377	31	94	125	33.1	SM14-Ex-EX252	
Kirkland_Main-2932	Kirkland_Manholes-2327	280.44	Kirkland_Manholes-2326	264.71	213.4	7.37	8	PVC	0.01	1,914	36	122	158	8.2	SM14-Ex-EX252	
Kirkland_Main-2933	Kirkland_Manholes-2326	264.71	Kirkland_Manholes-2322	259.98	165.9	2.85	8	PVC	0.01	1,190	37	126	163	13.7	SM14-Ex-EX252	
Kirkland_Main-2935	Kirkland_Manholes-2342	370.03	Kirkland_Manholes-2339	347.35	229.4	9.89	8	PVC	0.01	2,217	3	4	7	0.3	SM14-Ex-EX256	
Kirkland_Main-2936	Kirkland_Manholes-2340	335.99	Kirkland_Manholes-2379	312.61	331.3	7.06	8	PVC	0.01	1,873	2	4	6	0.3	SM14-Ex-EX257	
Kirkland_Main-2937	Kirkland_Manholes-2338	328.54	Kirkland_Manholes-2341	327.28	253.7	0.5	8	PVC	0.01	497	7	16	23	4.7	SM14-Ex-EX256	
Kirkland_Main-2938	Kirkland_Manholes-2341	327.28	Kirkland_Manholes-2335	323.22	289.5	1.4	8	PVC	0.01	835	10	24	34	4.1	SM14-Ex-EX256	
Kirkland_Main-2939	Kirkland_Manholes-2336	342.09	Kirkland_Manholes-2341	327.28	137.3	10.78	8	PVC	0.01	2,315	2	4	6	0.3	SM14-Ex-EX256	Drop Connection
Kirkland_Main-2940	Kirkland_Manholes-2349	361.19	Kirkland_Manholes-2335	323.22	315.1	12.05	8	PVC	0.01	2,448	2	4	6	0.2	SM14-Ex-EX252	
Kirkland_Main-2941	Kirkland_Manholes-2335	323.22	Kirkland_Manholes-2334	323.19	8.2	0.4	8	PVC	0.01	446	12	33	45	10	SM14-Ex-EX252	Drop Connection
Kirkland_Main-2942	Kirkland_Manholes-2343	315.2	Kirkland_Manholes-2348	314.6	208.7	0.29	8	PVC	0.01	378	15	37	51	13.5	SM14-Ex-EX254	
Kirkland_Main-2944	Kirkland_Manholes-2915	422.99	Kirkland_Manholes-2916	416.17	267.2	2.55	8	PVC	0.01	1,126	5	16	21	1.9		
Kirkland_Main-2945	Kirkland_Manholes-2916	416.17	Kirkland_Manholes-2936	415.17	403.5	0.25	8	PVC	0.01	351	7	24	31	8.9		
Kirkland_Main-2946	Kirkland_Manholes-2917	449.84	Kirkland_Manholes-2918	440.81	194.6	4.64	8	PVC	0.01	1,519	1	4	5	0.3		
Kirkland_Main-2947	Kirkland_Manholes-2918	440.81	Kirkland_Manholes-2919	429.45	198.9	5.71	8	PVC	0.01	1,685	2	8	10	0.6		
Kirkland_Main-2948	Kirkland_Manholes-2919	429.45	Kirkland_Manholes-2915	422.99	217.1	2.98	8	PVC	0.01	1,216	4	12	16	1.3		
Kirkland_Main-2949	Kirkland_Manholes-2922	91.28	Kirkland_Manholes-2921	73.76	147.5	11.88	8	PVC	0.01	2,430	2	13	15	0.6		
Kirkland_Main-2951	Kirkland_Manholes-2923	92.6	Kirkland_Manholes-2922	91.28	84.5	1.56	8	PVC	0.01	881	0	4	5	0.5		
Kirkland_Main-2952	Kirkland_Manholes-2924	104.01	Kirkland_Manholes-2922	91.28	265	4.8	8	PVC	0.01	1,545	2	4	6	0.4		
Kirkland_Main-2953	Kirkland_Manholes-2423	267.38	Kirkland_Manholes-2421	253.02	328.6	4.37	8	PVC	0.01	1,474	3	4	7	0.5		
Kirkland_Main-2954	Kirkland_Manholes-2429	273.52	Kirkland_Manholes-2424	257.66	398.8	3.98	8	PVC	0.01	1,406	33	98	130	9.3	SM14-Ex-EX260	
Kirkland_Main-2955	Kirkland_Manholes-2425	261.07	Kirkland_Manholes-2424	257.66	270.7	1.26	12	PVC	0.01	2,333	203	216	418	17.9	SM2	
Kirkland_Main-2956	Kirkland_Manholes-2426	264.11	Kirkland_Manholes-2425	261.07	237.2	1.28	12	PVC	0.01	2,353	196	195	391	16.6	SM2	
Kirkland_Main-2957	Kirkland_Manholes-2430	273.69	Kirkland_Manholes-2425	261.07	254.1	4.97	8	PVC	0.01	1,571	5	16	22	1.4	SM14-Ex-EX286	
Kirkland_Main-2958	Kirkland_Manholes-2427	267.5	Kirkland_Manholes-2426	266.42	268.8	0.4	12	PVC	0.01	1,315	195	191	386	29.4	SM2	Drop Connection
Kirkland_Main-2959	Kirkland_Manholes-2428	270.37	Kirkland_Manholes-2427	267.5	310.1	0.93	8	PVC	0.01	678	136	163	299	44.1	SM2	
Kirkland_Main-2960	Kirkland_Manholes-2431	277.03	Kirkland_Manholes-2430	273.69	201.8	1.66	8	PVC	0.01	907	0	4	4	0.5		
Kirkland_Main-2961	Kirkland_Manholes-2433	263.87	Kirkland_Manholes-2434	245.33	172.7	10.73	8	PVC	0.01	2,310	3	8	11	0.5	SM14-Ex-EX244	
Kirkland_Main-2962	Kirkland_Manholes-2434	245.33	Kirkland_Manholes-2437	244.43	228.6	0.39	8	PVC	0.01	442	5	12	17	3.9	SM14-Ex-EX244	
Kirkland_Main-2963	Kirkland_Manholes-2437	244.43	Kirkland_Manholes-2436	225.88	256.7	7.23	8	PVC	0.01	1,895	7	16	23	1.2	SM14-Ex-EX244	
Kirkland_Main-2964	Kirkland_Manholes-2514	400.04	Kirkland_Manholes-2517	387	217.1	6.01	8	PVC	0.01	1,728	10	15	25	1.4		
Kirkland_Main-2965	Kirkland_Manholes-2515	393.7	Kirkland_Manholes-2516	391.18	190.1	1.33	8	PVC	0.01	812	4	3	7	0.9		
Kirkland_Main-2966	Kirkland_Manholes-2516	391.18	Kirkland_Manholes-2517	387	163.7	2.55	8	PVC	0.01	1,127	6	6	12	1.1		
Kirkland_Main-2967	Kirkland_Manholes-2517	387	Kirkland_Manholes-2518	378.45	142.8	5.99	8	PVC	0.01	1,725	17	23	41	2.4		
Kirkland_Main-2968	Kirkland_Manholes-2518	378.45	Kirkland_Manholes-2524	346.56	373.5	8.54	8	PVC	0.01	2,060	36	26	62	3		
Kirkland_Main-2969	Kirkland_Manholes-2520	374.03	Kirkland_Manholes-2521	363.83	98.2	10.38	8	PVC	0.01	2,272	2	3	5	0.2		
Kirkland_Main-2970	Kirkland_Manholes-2435	226.37	Kirkland_Manholes-2436	225.88	121.8	0.4	8	PVC	0.01	446	2	4	6	1.4	SM14-Ex-EX285	
Kirkland_Main-2971	Kirkland_Manholes-2436	225.88	Kirkland_Manholes-2438	209.72	279.9	5.77	8	PVC	0.01	1,694	10	24	34	2	SM14-Ex-EX244	
Kirkland_Main-2972	Kirkland_Manholes-2438	209.72	Kirkland_Manholes-2441	205.09	260.5	1.78	8	PVC	0.01	940	15	37	52	5.5	SM14-Ex-EX244	
Kirkland_Main-2973	Kirkland_Manholes-2439	217.92	Kirkland_Manholes-2438	209.72	117.3	6.99	8	PVC	0.01	1,864	3	8	11	0.6	SM14-Ex-EX284	
Kirkland_Main-2974	Kirkland_Manholes-2440	242.45	Kirkland_Manholes-2439	217.92	136.9	17.92	8	PVC	0.01	2,985	2	4	6	0.2	SM14-Ex-EX284	
Kirkland_Main-2975	Kirkland_Manholes-2441	205.09	Kirkland_Manholes-2442	204.35	67.9	1.09	8	PVC	0.01	736	16	41	56	7.6	SM14-Ex-EX244	
Kirkland_Main-2977	Kirkland_Manholes-2992	396.35	Kirkland_Manholes-2991	395.79	171.2	0.33	8	PVC	0.01	403	2	20	23	5.6		
Kirkland_Main-2978	Kirkland_Manholes-2991	395.79	Kirkland_Manholes-1328	394.1	142.6	1.18	8	PVC	0.01	767	2	24	27	3.5		
Kirkland_Main-2979	Kirkland_Manholes-2737	259.86	Kirkland_Manholes-2310	256	91.2	4.23	8	PVC	0.01	1,451	4	9	13	0.9		
Kirkland_Main-2980	Kirkland_Manholes-2442	204.35	Kirkland_Manholes-2443	200	192.1	2.26	8	PVC	0.01	1,061	16	45	61	5.7	SM14-Ex-EX244	
Kirkland_Main-2981	Kirkland_Manholes-2444	199.73	Kirkland_Manholes-2445	191.11	277	3.11	8	PVC	0.01	1,244	21	65	86	6.9	SM14-Ex-EX244	
Kirkland_Main-2982	Kirkland_Manholes-2443	200	Kirkland_Manholes-2444	199.73	20.4	1.32	8	PVC	0.01	810	17	49	66	8.1	SM14-Ex-EX244	
Kirkland_Main-2983	Kirkland_Manholes-2668	18.29	Kirkland_Manholes-2318	17.6	53.6	1.29	8	PVC	0.01	800	2	6	8	1		

2021 (6-year) with Proposed Improvements - Peak Hour Flow - Pipe Capacity Table

Label	Upstream Node	Upstream Invert Elevation (ft)	Downstream Node	Downstream Invert Elevation (ft)	Length (ft)	Slope (%)	Diameter (in)	Material	Manning's n	Design Capacity (gpm)	Domestic Flow (gpm)	I/I Flow (gpm)	Total Flow (gpm)	Percent Full (%)	CIP No.	Notes
Kirkland_Main-2984	Kirkland_Manholes-2320	18	Kirkland_Manholes-2319	17.7	261.8	0.11	21	PVC	0.01	3,129	127	273	399	12.8		
Kirkland_Main-2985	Kirkland_Manholes-2321	18.2	Kirkland_Manholes-2320	18	193.7	0.1	21	PVC	0.01	2,971	121	214	335	11.3		
Kirkland_Main-2986	Kirkland_Manholes-2303	195.57	Kirkland_Manholes-2302	194.37	30.3	3.96	12	PVC	0.01	4,136	651	1,506	2,157	52.1	SM2	
Kirkland_Main-2987	Kirkland_Manholes-2302	194.37	Kirkland_Manholes-2304	192.91	51.2	2.85	12	PVC	0.01	3,510	651	1,510	2,161	61.6		
Kirkland_Main-2988	Kirkland_Manholes-2285	419.89	Kirkland_Manholes-2284	417.52	64.2	3.69	8	PVC	0.01	1,355	257	692	948	70	SM14-Ex-EX248	
Kirkland_Main-2989	Kirkland_Manholes-2284	417.52	Kirkland_Manholes-2282	401.71	231.8	6.82	8	PVC	0.01	1,841	257	696	953	51.8	SM14-Ex-EX248	
Kirkland_Main-2990	Kirkland_Manholes-2263	374.13	Kirkland_Manholes-2262	311.78	761.4	8.19	8	PVC	0.01	2,018	288	863	1,151	57	SM14-Ex-EX248	
Kirkland_Main-2991	Kirkland_Manholes-2669	379.65	Kirkland_Manholes-2290	372.36	83.4	8.74	8	PVC	0.01	2,084	5	4	9	0.4		
Kirkland_Main-2992	Kirkland_Manholes-2290	372.36	Kirkland_Manholes-2291	367.48	64.2	7.6	8	PVC	0.01	1,944	5	8	13	0.7		
Kirkland_Main-2993	Kirkland_Manholes-2291	367.48	Kirkland_Manholes-2292	366.54	71.9	1.31	8	PVC	0.01	806	5	12	18	2.2		
Kirkland_Main-2994	Kirkland_Manholes-2292	366.54	Kirkland_Manholes-2293	362.58	154	2.57	8	PVC	0.01	1,131	6	16	22	1.9		
Kirkland_Main-2995	Kirkland_Manholes-2670	399.73	Kirkland_Manholes-2298	382.52	120.1	14.33	8	PVC	0.01	2,669	3	8	11	0.4		Drop Connection
Kirkland_Main-2997	Kirkland_Manholes-2673	372.3	Kirkland_Manholes-2675	350.82	245.7	8.74	8	PVC	0.01	2,084	2	4	6	0.3	SM14-Ex-EX208	
Kirkland_Main-2998	Kirkland_Manholes-2709	292.14	Kirkland_Manholes-2708	281.32	58.6	18.46	8	PVC	0.01	3,029	2	16	18	0.6		
Kirkland_Main-2999	Kirkland_Manholes-2708	281.32	Kirkland_Manholes-2707	271.62	125.5	7.73	8	PVC	0.01	1,960	2	20	22	1.1		
Kirkland_Main-3000	Kirkland_Manholes-2711	316.09	Kirkland_Manholes-2709	292.14	170	14.09	8	PVC	0.01	2,647	2	8	10	0.4		
Kirkland_Main-3001	Kirkland_Manholes-2707	271.62	Kirkland_Manholes-2704	250.11	214	10.05	8	PVC	0.01	2,235	2	24	27	1.2		
Kirkland_Main-3002	Kirkland_Manholes-2703	250.19	Kirkland_Manholes-2704	250.11	401.9	0.02	8	PVC	0.01	99	5	16	21	21.1		
Kirkland_Main-3003	Kirkland_Manholes-2712	326.54	Kirkland_Manholes-2711	316.09	154.3	6.77	8	PVC	0.01	1,835	1	4	5	0.3		
Kirkland_Main-3005	Kirkland_Manholes-2714	316.79	Kirkland_Manholes-2713	280.32	397.8	9.17	8	PVC	0.01	2,135	2	4	6	0.3	SM14-Ex-EX204	
Kirkland_Main-3006	Kirkland_Manholes-2713	280.32	Kirkland_Manholes-2702	256.62	323.4	7.33	8	PVC	0.01	1,909	5	8	13	0.7	SM14-Ex-EX204	
Kirkland_Main-3008	Kirkland_Manholes-2721	21.2	Kirkland_Manholes-2722	21	44.5	0.45	12	PVC	0.01	1,394	86	43	129	9.2	SM14-Ex-EX289	
Kirkland_Main-3009	Kirkland_Manholes-2724	25.33	Kirkland_Manholes-2723	21.5	122.9	3.12	8	PVC	0.01	1,245	12	6	18	1.5	SM14-Ex-EX288	
Kirkland_Main-3010	Kirkland_Manholes-2723	21.5	Kirkland_Manholes-2722	21	70.9	0.7	8	PVC	0.01	592	14	12	26	4.4	SM14-Ex-EX288	
Kirkland_Main-3011	Kirkland_Manholes-2727	13	Kirkland_Manholes-2726	12.39	121.7	0.5	18	PVC	0.01	4,339	257	593	850	19.6	SM14-Ex-EX289	
Kirkland_Main-3012	Kirkland_Manholes-2729	13.77	Kirkland_Manholes-2727	13	208.7	0.37	18	PVC	0.01	3,723	256	587	842	22.6	SM14-Ex-EX289	
Kirkland_Main-3013	Kirkland_Manholes-2730	14.43	Kirkland_Manholes-2728	13.83	161.6	0.37	18	PVC	0.01	3,734	254	574	828	22.2	SM14-Ex-EX289	
Kirkland_Main-3014	Kirkland_Manholes-2728	13.83	Kirkland_Manholes-2729	13.77	16.5	0.36	18	PVC	0.01	3,696	256	580	836	22.6	SM14-Ex-EX289	
Kirkland_Main-3015	Kirkland_Manholes-2731	15.6	Kirkland_Manholes-2977	14.89	193.8	0.37	18	PVC	0.01	3,709	252	556	808	21.8	SM14-Ex-EX289	
Kirkland_Main-3016	Kirkland_Manholes-2732	15.71	Kirkland_Manholes-2731	15.6	29.6	0.37	18	PVC	0.01	3,738	250	550	800	21.4	SM14-Ex-EX289	
Kirkland_Main-3017	Kirkland_Manholes-2733	16.02	Kirkland_Manholes-2732	15.71	84.3	0.37	18	PVC	0.01	3,716	247	544	790	21.3	SM14-Ex-EX289	
Kirkland_Main-3018	Kirkland_Manholes-2735	16.81	Kirkland_Manholes-2733	16.02	214.5	0.37	18	PVC	0.01	3,719	246	538	783	21.1	SM14-Ex-EX289	
Kirkland_Main-3019	Kirkland_Manholes-2734	17.15	Kirkland_Manholes-2735	16.81	92.8	0.37	18	PVC	0.01	3,710	244	532	776	20.9	SM14-Ex-EX289	
Kirkland_Main-3020	Kirkland_Manholes-2736	17.76	Kirkland_Manholes-2734	17.15	164.5	0.37	18	PVC	0.01	3,733	244	525	770	20.6	SM14-Ex-EX289	
Kirkland_Main-3021	Kirkland_Manholes-2741	83.04	Kirkland_Manholes-2739	73.09	180.1	5.53	8	PVC	0.01	1,657	6	18	24	1.5		
Kirkland_Main-3022	Kirkland_Manholes-2740	73.45	Kirkland_Manholes-2739	73.09	167.3	0.22	8	PVC	0.01	327	0	6	6	1.9		
Kirkland_Main-3023	Kirkland_Manholes-2739	73.09	Kirkland_Manholes-2203	62.94	47.2	21.5	8	PVC	0.01	3,269	14	55	69	2.1		
Kirkland_Main-3024	Kirkland_Manholes-2744	119.06	Kirkland_Manholes-2739	73.09	200.2	22.96	8	PVC	0.01	3,378	8	24	32	0.9		
Kirkland_Main-3025	Kirkland_Manholes-2745	129.7	Kirkland_Manholes-2744	119.06	80.2	13.27	8	PVC	0.01	2,569	0	6	6	0.2		
Kirkland_Main-3026	Kirkland_Manholes-2746	121.99	Kirkland_Manholes-2744	119.06	88.8	3.3	8	PVC	0.01	1,280	0	12	12	1		
Kirkland_Main-3027	Kirkland_Manholes-2747	133.27	Kirkland_Manholes-2746	121.99	59.4	19	8	PVC	0.01	3,073	0	6	6	0.2		
Kirkland_Main-3028	Kirkland_Manholes-2742	91.54	Kirkland_Manholes-2741	83.04	69.2	12.29	8	PVC	0.01	2,471	6	12	18	0.7		
Kirkland_Main-3029	Kirkland_Manholes-2743	92.6	Kirkland_Manholes-2742	91.54	64.4	1.65	8	PVC	0.01	904	6	6	12	1.4		
Kirkland_Main-3030	Kirkland_Manholes-2748	105.07	Kirkland_Manholes-2749	94.38	144.8	7.38	8	PVC	0.01	1,916	0	6	6	0.3		
Kirkland_Main-3031	Kirkland_Manholes-2749	94.38	Kirkland_Manholes-2880	81.72	189.8	6.67	8	PVC	0.01	1,821	28	18	46	2.5		
Kirkland_Main-3032	Kirkland_Manholes-2756	10.03	Kirkland_Manholes-2754	9.95	319.1	0.03	36	PVC	0.01	6,161	625	1,867	2,793	45.3	SM14-Ex-EX10	
Kirkland_Main-3033	Kirkland_Manholes-2757	10.95	Kirkland_Manholes-2756	10.03	146.2	0.63	36	PVC	0.01	30,867	625	1,862	2,789	9	SM14-Ex-EX10	
Kirkland_Main-3036	Kirkland_Manholes-2765	13.19	Kirkland_Manholes-2763	13.15	315.8	0.01	36	PVC	0.01	4,380	554	1,568	2,423	55.3	SM14-Ex-EX10	
Kirkland_Main-3037	Kirkland_Manholes-2766	361.12	Kirkland_Manholes-2548	359.75	342.1	0.4	8	PVC	0.01	446	1	4	5	1.1		
Kirkland_Main-3038	Kirkland_Manholes-397	247.33	Kirkland_Manholes-376	239.8	215.8	3.49	8	PVC	0.01	1,317	64	232	296	22.5		
Kirkland_Main-3039	Kirkland_Manholes-2769	260.32	Kirkland_Manholes-1077	252.59	364.2	2.12	8	PVC	0.01	1,027	3	8	11	1.1		
Kirkland_Main-3044	Kirkland_Manholes-2275	411.72	Kirkland_Manholes-2276	410.45	52.8	2.4	8	PVC	0.01	1,093	1	4	5	0.5		
Kirkland_Main-3045	Kirkland_Manholes-2771	320.53	Kirkland_Manholes-2772	308.23	258.2	4.76	8	PVC	0.01	1,539	50	112	162	10.5		
Kirkland_Main-3046	Kirkland_Manholes-2776	334.45	Kirkland_Manholes-2775	332.7	391.2	0.45	8	PVC	0.01	472	50	103	153	32.4		
Kirkland_Main-3047	Kirkland_Manholes-2775	332.7	Kirkland_Manholes-2774	330.08	382.8	0.68	8	PVC	0.01	583	50	106	156	26.7		
Kirkland_Main-3048	Kirkland_Manholes-2774	330.08	Kirkland_Manholes-2771	320.53	310.5	3.08	8	PVC	0.01	1,237	50	109	159	12.8		
Kirkland_Main-3049	Kirkland_Manholes-2782	326.16	Kirkland_Manholes-2781	293.52	273.1	11.95	8	PVC	0.01	2,438	0	3	3	0.1		
Kirkland_Main-3050	Kirkland_Manholes-2781	293.52	Kirkland_Manholes-2780	291.73	199	0.9	8	PVC	0.01	669	22	5	27	4		
Kirkland_Main-3051	Kirkland_Manholes-2780	291.73	Kirkland_Manholes-2779	288.37	73	4.6	8	PVC	0.01	1,512	22	8	30	2		
Kirkland_Main-3052	Kirkland_Manholes-2779	288.37	Kirkland_Manholes-2778	255.64	255.5	12.81	8	PVC	0.01	2,524	22	11	32	1.3		
Kirkland_Main-3053	Kirkland_Manholes-2777	256.44	Kirkland_Manholes-2778	255.64	115.8	0.69	8	PVC	0.01	586	0	3	3	0.5		
Kirkland_Main-3054	Kirkland_Manholes-2785	259.34	Kirkland_Manholes-2786	258.1	92.6	1.34	8	PVC	0.01	816	9	49	57	7		

2021 (6-year) with Proposed Improvements - Peak Hour Flow - Pipe Capacity Table

Label	Upstream Node	Upstream Invert Elevation (ft)	Downstream Node	Downstream Invert Elevation (ft)	Length (ft)	Slope (%)	Diameter (in)	Material	Manning's n	Design Capacity (gpm)	Domestic Flow (gpm)	I/I Flow (gpm)	Total Flow (gpm)	Percent Full (%)	CIP No.	Notes
Kirkland_Main-3055	Kirkland_Manholes-2784	262.56	Kirkland_Manholes-2785	259.34	108.2	2.97	8	PVC	0.01	1,216	8	45	52	4.3		
Kirkland_Main-3057	Kirkland_Manholes-2787	252.17	Kirkland_Manholes-2788	251.6	73	0.78	8	PVC	0.01	623	16	90	106	17	SM14-Ex-EX313	
Kirkland_Main-3059	Kirkland_Manholes-2798	192.18	Kirkland_Manholes-2797	190.87	110.6	1.18	8	PVC	0.01	767	1	4	5	0.7	SM14-Ex-EX296	
Kirkland_Main-3060	Kirkland_Manholes-2797	190.87	Kirkland_Manholes-2796	185.45	211.8	2.56	8	PVC	0.01	1,128	6	16	22	2	SM14-Ex-EX296	
Kirkland_Main-3061	Kirkland_Manholes-2799	233.81	Kirkland_Manholes-2800	221.07	125.6	10.15	8	PVC	0.01	2,246	1	4	5	0.2	SM14-Ex-EX302	
Kirkland_Main-3062	Kirkland_Manholes-2800	221.07	Kirkland_Manholes-2797	190.87	260	11.62	8	PVC	0.01	2,403	3	8	11	0.4	SM14-Ex-EX302	
Kirkland_Main-3063	Kirkland_Manholes-2802	238.36	O-39	228.33	111.4	9	8	PVC	0.01	2,116	22	22	43	2		
Kirkland_Main-3064	Kirkland_Manholes-2810	44.75	Kirkland_Manholes-2809	44.5	62.2	0.4	8	PVC	0.01	446	25	92	117	26.2	SM14-Ex-EX316	Drop Connection
Kirkland_Main-3065	Kirkland_Manholes-2808	55.6	Kirkland_Manholes-2807	47.79	63.2	12.36	8	PVC	0.01	2,479	0	12	12	0.5	SM14-Ex-EX317	
Kirkland_Main-3066	Kirkland_Manholes-2807	47.79	Kirkland_Manholes-2810	44.75	258.6	1.18	8	PVC	0.01	764	1	79	81	10.5	SM14-Ex-EX316	
Kirkland_Main-3067	Kirkland_Manholes-2806	53.14	Kirkland_Manholes-2807	47.79	321.9	1.66	8	PVC	0.01	909	0	61	61	6.7	SM14-Ex-EX316	
Kirkland_Main-3068	Kirkland_Manholes-2805	68.41	Kirkland_Manholes-2806	53.14	319.8	4.78	8	PVC	0.01	1,541	0	55	55	3.6	SM14-Ex-EX316	
Kirkland_Main-3069	Kirkland_Manholes-2811	70.36	Kirkland_Manholes-2808	55.6	132.6	11.13	8	PVC	0.01	2,353	0	6	6	0.3	SM14-Ex-EX317	
Kirkland_Main-3070	Kirkland_Manholes-2814	79.68	Kirkland_Manholes-2805	68.41	70.6	15.96	8	PVC	0.01	2,817	0	6	6	0.2	SM14-Ex-EX318	
Kirkland_Main-3071	Kirkland_Manholes-2815	71.41	Kirkland_Manholes-2805	68.41	115.4	2.6	8	PVC	0.01	1,137	0	18	18	1.6	SM14-Ex-EX318	
Kirkland_Main-3072	Kirkland_Manholes-2812	81.42	Kirkland_Manholes-2815	71.41	284.3	3.52	8	PVC	0.01	1,323	0	12	12	0.9	SM14-Ex-EX318	
Kirkland_Main-3073	Kirkland_Manholes-2813	84.17	Kirkland_Manholes-2812	81.42	272.3	1.01	8	PVC	0.01	709	0	6	6	0.9	SM14-Ex-EX318	
Kirkland_Main-3074	Kirkland_Manholes-2816	45.4	Kirkland_Manholes-2810	44.75	163.3	0.4	8	PVC	0.01	446	1	6	7	1.6		
Kirkland_Main-3075	Kirkland_Manholes-2822	57.68	Kirkland_Manholes-2821	56.89	105.9	0.75	8	PVC	0.01	609	33	6	39	6.4		
Kirkland_Main-3076	Kirkland_Manholes-2821	56.89	Kirkland_Manholes-2820	55.04	95.1	1.94	8	PVC	0.01	983	34	12	46	4.7		
Kirkland_Main-3077	Kirkland_Manholes-2820	55.04	Kirkland_Manholes-2819	48.42	258.4	2.56	8	PVC	0.01	1,128	36	18	54	4.8		
Kirkland_Main-3078	Kirkland_Manholes-2819	48.42	Kirkland_Manholes-2817	44.74	95	3.87	8	PVC	0.01	1,388	36	24	61	4.4		
Kirkland_Main-3079	Kirkland_Manholes-2818	48.57	Kirkland_Manholes-2817	44.74	127	3.01	8	PVC	0.01	1,224	3	6	9	0.7		
Kirkland_Main-3080	Kirkland_Manholes-2817	44.74	Kirkland_Manholes-2823	34.33	329.7	3.16	8	PVC	0.01	1,253	40	37	77	6.1		
Kirkland_Main-3081	Kirkland_Manholes-2827	39.5	Kirkland_Manholes-2826	38.6	407	0.22	15	PVC	0.01	1,768	227	590	817	46.2	SM14-Ex-EX319	Drop Connection
Kirkland_Main-3082	Kirkland_Manholes-2826	36.35	Kirkland_Manholes-2823	34.33	324.1	0.62	15	PVC	0.01	2,973	236	596	832	28	SM14-Ex-EX319	
Kirkland_Main-3083	Kirkland_Manholes-2823	34.33	Kirkland_Manholes-2824	33.64	78.4	0.88	15	PVC	0.01	3,537	276	639	914	25.9	SM14-Ex-EX319	
Kirkland_Main-3084	Kirkland_Manholes-2824	33.64	Kirkland_Manholes-2825	33	93.6	0.69	15	PVC	0.01	3,124	276	645	921	29.5	SM14-Ex-EX319	
Kirkland_Main-3085	Kirkland_Manholes-2830	52.24	Kirkland_Manholes-2831	43.6	77.9	11.1	8	PVC	0.01	2,349	6	6	84	3.6		
Kirkland_Main-3088	Kirkland_Manholes-2831	43.6	Kirkland_Manholes-2829	40.2	467.6	0.73	12	PVC	0.01	1,772	158	401	630	35.6	SM14-Ex-EX309	
Kirkland_Main-3089	Kirkland_Manholes-2825	33	Kirkland_Manholes-2832	30.86	94.7	2.26	15	PVC	0.01	5,664	276	651	927	16.4	SM14-Ex-EX319	
Kirkland_Main-3090	Kirkland_Manholes-2829	40.2	Kirkland_Manholes-2832	30.86	260.5	3.59	12	PVC	0.01	3,936	158	408	637	16.2	SM14-Ex-EX309	
Kirkland_Main-3091	Kirkland_Manholes-2828	34.38	Kirkland_Manholes-2832	30.86	239.8	1.47	8	PVC	0.01	854	38	6	44	5.1		
Kirkland_Main-3092	Kirkland_Manholes-2832	30.86	Kirkland_Manholes-2833	29.99	303.3	0.29	18	PVC	0.01	3,283	471	1,071	1,613	49.1	SM14-Ex-EX309	
Kirkland_Main-3093	Kirkland_Manholes-2839	98.83	Kirkland_Manholes-2840	90.84	75.4	10.6	8	PVC	0.01	2,295	2	6	8	0.4		
Kirkland_Main-3094	Kirkland_Manholes-2841	31.53	Kirkland_Manholes-2842	26.9	41.3	11.2	8	PVC	0.01	2,360	5	18	23	1	SM14-Ex-EX310	
Kirkland_Main-3095	Kirkland_Manholes-2843	16.05	YARROW POINT_WETWELL	6	32.1	31.31	8	PVC	0.01	3,945	13	47	60	1.5	SM14-Ex-EX315	
Kirkland_Main-3096	Kirkland_Manholes-2847	24.39	Kirkland_Manholes-2854	20.28	103.2	3.98	8	PVC	0.01	1,407	0	5	5	0.3	SM14-Ex-EX315	
Kirkland_Main-3097	Kirkland_Manholes-2854	20.28	Kirkland_Manholes-2855	19.82	135	0.34	8	PVC	0.01	411	0	9	9	2.3	SM14-Ex-EX315	
Kirkland_Main-3098	Kirkland_Manholes-2855	19.82	Kirkland_Manholes-2846	17.72	172.2	1.22	8	PVC	0.01	779	0	14	14	1.8	SM14-Ex-EX315	
Kirkland_Main-3099	Kirkland_Manholes-2846	17.72	Kirkland_Manholes-2843	16.05	133.2	1.25	8	PVC	0.01	790	0	19	19	2.4	SM14-Ex-EX315	
Kirkland_Main-3100	Kirkland_Manholes-2845	16.72	Kirkland_Manholes-2843	16.05	68.4	0.97	8	PVC	0.01	696	13	19	32	4.5	SM14-Ex-EX315	
Kirkland_Main-3102	Kirkland_Manholes-2844	27.14	Kirkland_Manholes-2843	26.59	137.5	0.4	8	PVC	0.01	446	0	5	5	1	SM14-Ex-EX315	Drop Connection
Kirkland_Main-3104	Kirkland_Manholes-2809	42.91	Kirkland_Manholes-2834	37.62	317.9	1.66	8	PVC	0.01	910	29	98	126	13.9	SM14-Ex-EX316	
Kirkland_Main-3105	Kirkland_Manholes-2836	60.97	Kirkland_Manholes-2835	50.93	162.4	6.18	8	PVC	0.01	1,753	7	18	25	1.4		
Kirkland_Main-3106	Kirkland_Manholes-2835	50.93	Kirkland_Manholes-2834	37.62	47.5	28.02	8	PVC	0.01	3,732	7	24	32	0.8		
Kirkland_Main-3108	Kirkland_Manholes-2862	89.88	Kirkland_Manholes-2863	49.4	272.9	14.83	8	PVC	0.01	2,716	8	10	18	0.7		
Kirkland_Main-3109	Kirkland_Manholes-2861	109.7	Kirkland_Manholes-2862	89.88	239.2	8.29	8	PVC	0.01	2,030	5	7	12	0.6		
Kirkland_Main-3110	Kirkland_Manholes-2860	120.82	Kirkland_Manholes-2861	109.7	223.4	4.98	8	PVC	0.01	1,573	2	3	5	0.3		
Kirkland_Main-3115	Kirkland_Manholes-2883	268.55	Kirkland_Manholes-2876	267.92	60.1	1.05	8	PVC	0.01	722	2	8	10	1.4		
Kirkland_Main-3116	Kirkland_Manholes-2884	269.34	Kirkland_Manholes-2883	268.55	63.9	1.24	8	PVC	0.01	784	1	4	5	0.7		
Kirkland_Main-3118	Kirkland_Manholes-2548	359.75	Kirkland_Manholes-2891	359.09	165.1	0.4	8	PVC	0.01	448	9	24	34	7.6		
Kirkland_Main-3119	Kirkland_Manholes-2891	359.09	Kirkland_Manholes-2561	358.82	66.3	0.4	8	PVC	0.01	446	10	28	39	8.7		
Kirkland_Main-3121	Kirkland_Manholes-2893	432.24	Kirkland_Manholes-1991	431.18	280.1	0.38	8	PVC	0.01	434	3	4	7	1.6		
Kirkland_Main-3122	Kirkland_Manholes-2894	306.1	Kirkland_Manholes-2895	306	25.4	0.4	8	PVC	0.01	446	2	16	19	4.2		
Kirkland_Main-3123	Kirkland_Manholes-2895	306	Kirkland_Manholes-2896	304.88	150.3	0.75	8	PVC	0.01	609	3	20	23	3.8		
Kirkland_Main-3124	Kirkland_Manholes-2896	304.88	Kirkland_Manholes-2897	303.8	169.5	0.64	8	PVC	0.01	563	4	24	28	5		
Kirkland_Main-3125	Kirkland_Manholes-2898	307.58	Kirkland_Manholes-2897	303.8	40	9.44	8	PVC	0.01	2,166	1	4	5	0.2		
Kirkland_Main-3126	Kirkland_Manholes-2897	303.8	Kirkland_Manholes-2899	303.26	125.6	0.43	8	PVC	0.01	462	5	33	38	8.2		
Kirkland_Main-3127	Kirkland_Manholes-2899	303.26	Kirkland_Manholes-2900	302.3	244.9	0.39	8	PVC	0.01	441	7	37	43	9.8		
Kirkland_Main-3128	Kirkland_Manholes-882	297.25	Kirkland_Manholes-345	279.43	305.8	5.83	8	PVC	0.01	1,702	3	4	8	0.4		
Kirkland_Main-3129	Kirkland_Manholes-2901	294.77	Kirkland_Manholes-883	294.42	87	0.4	8	PVC	0.01	446	1	16	17	3.9		

2021 (6-year) with Proposed Improvements - Peak Hour Flow - Pipe Capacity Table

Label	Upstream Node	Upstream Invert Elevation (ft)	Downstream Node	Downstream Invert Elevation (ft)	Length (ft)	Slope (%)	Diameter (in)	Material	Manning's n	Design Capacity (gpm)	Domestic Flow (gpm)	I/I Flow (gpm)	Total Flow (gpm)	Percent Full (%)	CIP No.	Notes
Kirkland_Main-3130	Kirkland_Manholes-883	294.42	Kirkland_Manholes-906	293.01	64.9	2.17	8	PVC	0.01	1,039	5	37	42	4		
Kirkland_Main-3131	Kirkland_Manholes-2902	301.02	Kirkland_Manholes-883	294.42	322.3	2.05	8	PVC	0.01	1,009	4	16	20	2		
Kirkland_Main-3132	Kirkland_Manholes-2903	301.35	Kirkland_Manholes-2902	301.02	151.1	0.22	8	PVC	0.01	329	3	12	15	4.6		
Kirkland_Main-3133	Kirkland_Manholes-2905	302.8	Kirkland_Manholes-2904	301.39	65.9	2.14	8	PVC	0.01	1,031	1	4	5	0.5		
Kirkland_Main-3134	Kirkland_Manholes-2904	301.39	Kirkland_Manholes-2903	301.35	153.8	0.03	8	PVC	0.01	114	2	8	10	8.5		
Kirkland_Main-3135	Kirkland_Manholes-2913	474.42	Kirkland_Manholes-1391	471.35	128.8	2.38	8	PVC	0.01	1,088	1	8	9	0.9		
Kirkland_Main-3136	Kirkland_Manholes-2906	405.37	Kirkland_Manholes-2907	402.62	299.9	0.92	8	PVC	0.01	675	3	26	29	4.3		
Kirkland_Main-3137	Kirkland_Manholes-2907	402.62	Kirkland_Manholes-2908	397.79	295.5	1.63	8	PVC	0.01	901	3	29	33	3.6		
Kirkland_Main-3138	Kirkland_Manholes-2908	397.79	Kirkland_Manholes-2532	395.91	85.9	2.19	8	PVC	0.01	1,043	3	32	36	3.4		
Kirkland_Main-3139	Kirkland_Manholes-2910	412.56	Kirkland_Manholes-2017	412	24.7	2.27	8	PVC	0.01	1,062	5	16	21	2		
Kirkland_Main-3140	Kirkland_Manholes-2911	414.42	Kirkland_Manholes-2910	412.56	288.8	0.64	8	PVC	0.01	566	4	12	17	2.9		
Kirkland_Main-3141	Kirkland_Manholes-2909	423.03	Kirkland_Manholes-2912	418.07	296	1.68	8	PVC	0.01	913	2	4	6	0.6		
Kirkland_Main-3142	Kirkland_Manholes-2912	418.07	Kirkland_Manholes-2911	414.42	285.6	1.28	8	PVC	0.01	797	3	8	12	1.4		
Kirkland_Main-3143	Kirkland_Manholes-2914	478.18	Kirkland_Manholes-2913	474.42	305.5	1.23	8	PVC	0.01	782	1	4	5	0.6		
Kirkland_Main-3144	Kirkland_Manholes-2036	452.58	Kirkland_Manholes-1216	443.89	347.4	2.5	8	PVC	0.01	1,115	148	326	474	42.5	SM14-Ex-EX264	
Kirkland_Main-3145	Kirkland_Manholes-1216	443.89	Kirkland_Manholes-2048	442.51	28.4	4.86	8	PVC	0.01	1,554	151	334	485	31.2	SM14-Ex-EX264	
Kirkland_Main-3146	Kirkland_Manholes-1719	46.02	Kirkland_Manholes-2935	44.9	241.2	0.46	8	PVC	0.01	480	80	58	138	28.6	SM14-Ex-EX165	
Kirkland_Main-3147	Kirkland_Manholes-2935	44.9	Kirkland_Manholes-1741	41.4	292.3	1.2	8	PVC	0.01	772	80	66	146	18.9	SM14-Ex-EX165	
Kirkland_Main-3150	Kirkland_Manholes-733	35.72	Kirkland_Manholes-758	27.19	290.4	2.94	18	PVC	0.01	10,503	918	1,747	2,665	25.4		
Kirkland_Main-3151	Kirkland_Manholes-758	27.19	Kirkland_Manholes-734	25.7	118.9	1.25	18	PVC	0.01	6,865	918	1,755	2,673	38.9		
Kirkland_Main-3152	Kirkland_Manholes-1689	43.75	Kirkland_Manholes-2927	38.62	107.6	4.77	8	PVC	0.01	1,540	78	103	181	11.7	SM14-Ex-EX161	
Kirkland_Main-3153	Kirkland_Manholes-2927	38.62	Kirkland_Manholes-733	35.72	20.9	13.88	8	PVC	0.01	2,627	78	111	189	7.2		
Kirkland_Main-3154	Kirkland_Manholes-2928	60.36	Kirkland_Manholes-730	57.26	71.9	4.31	18	PVC	0.01	12,722	174	552	726	5.7		
Kirkland_Main-3155	Kirkland_Manholes-1372	427.9	Kirkland_Manholes-2936	415.17	236.6	5.38	8	PVC	0.01	1,635	63	146	210	12.8	SM14-Ex-EX218	
Kirkland_Main-3156	Kirkland_Manholes-2936	415.17	Kirkland_Manholes-1351	415.08	21.5	0.4	8	PVC	0.01	446	71	175	246	55.2		Drop Connection
Kirkland_Main-3157	Kirkland_Manholes-2937	243.36	Kirkland_Manholes-2938	237.72	156	3.61	8	PVC	0.01	1,340	3	4	7	0.5		
Kirkland_Main-3158	Kirkland_Manholes-2938	237.72	Kirkland_Manholes-1313	237.26	115.6	0.4	8	PVC	0.01	446	4	9	13	2.8		Drop Connection
Kirkland_Main-3159	Kirkland_Manholes-2939	317.33	Kirkland_Manholes-2887	302.33	186.7	8.03	8	PVC	0.01	1,999	3	12	16	0.8		
Kirkland_Main-3161	Kirkland_Manholes-2940	472.26	Kirkland_Manholes-564	469.28	203.6	1.46	8	PVC	0.01	853	1	4	5	0.5		
Kirkland_Main-3162	Kirkland_Manholes-2943	249.65	Kirkland_Manholes-1876	247.77	195.1	0.96	8	PVC	0.01	692	0	8	8	1.2		
Kirkland_Main-3163	Kirkland_Manholes-2947	393.38	Kirkland_Manholes-2946	380.26	237.2	5.53	8	PVC	0.01	1,658	2	4	6	0.3		
Kirkland_Main-3164	Kirkland_Manholes-2946	380.26	Kirkland_Manholes-2945	367.86	240.8	5.15	8	PVC	0.01	1,600	7	20	28	1.7		
Kirkland_Main-3165	Kirkland_Manholes-2945	367.86	Kirkland_Manholes-2948	345.5	368	6.08	8	PVC	0.01	1,738	7	24	32	1.8		
Kirkland_Main-3166	Kirkland_Manholes-2948	345.5	Kirkland_Manholes-1933	343.68	135.8	1.34	8	PVC	0.01	816	7	28	36	4.4		
Kirkland_Main-3167	Kirkland_Manholes-2171	166.42	Kirkland_Manholes-1107	164.79	299.5	0.54	8	PVC	0.01	520	0	4	4	0.8	SM14-Ex-EX21	
Kirkland_Main-3168	Kirkland_Manholes-2942	127.29	Kirkland_Manholes-2941	110.18	161.6	10.59	8	PVC	0.01	2,294	2	4	7	0.3		
Kirkland_Main-3169	Kirkland_Manholes-80	110.33	Kirkland_Manholes-2941	110.18	10	1.51	8	PVC	0.01	866	3	4	7	0.8		
Kirkland_Main-3170	Kirkland_Manholes-2941	110.18	Kirkland_Manholes-144	88.96	389.8	5.44	8	PVC	0.01	1,645	5	13	18	1.1		
Kirkland_Main-3171	Kirkland_Manholes-2949	387.42	Kirkland_Manholes-2946	380.26	393.8	1.82	8	PVC	0.01	951	4	12	16	1.7		
Kirkland_Main-3172	Kirkland_Manholes-2950	396.31	Kirkland_Manholes-2949	387.42	98.6	9.02	8	PVC	0.01	2,117	3	8	11	0.5		
Kirkland_Main-3173	Kirkland_Manholes-2951	398.98	Kirkland_Manholes-2950	396.31	142	1.88	8	PVC	0.01	967	2	4	6	0.6		
Kirkland_Main-3174	Kirkland_Manholes-2952	137.34	Kirkland_Manholes-2509	126.48	113.7	9.55	8	PVC	0.01	2,179	2	6	8	0.4		
Kirkland_Main-3175	Kirkland_Manholes-1035	182.7	Kirkland_Manholes-2955	181.46	188.6	0.66	8	PVC	0.01	572	16	52	68	11.9		
Kirkland_Main-3176	Kirkland_Manholes-2955	181.46	Kirkland_Manholes-1038	180.54	146.6	0.63	8	PVC	0.01	559	20	65	85	15.3		
Kirkland_Main-3177	Kirkland_Manholes-2954	183.8	Kirkland_Manholes-2953	182.9	158.6	0.57	8	PVC	0.01	531	1	4	6	1.1		
Kirkland_Main-3178	Kirkland_Manholes-2953	182.9	Kirkland_Manholes-2955	181.46	297.7	0.48	8	PVC	0.01	490	3	9	12	2.5		
Kirkland_Main-3179	Kirkland_Manholes-2956	306.62	Kirkland_Manholes-876	301.25	262.2	2.05	8	PVC	0.01	1,009	2	16	18	1.8		
Kirkland_Main-3180	Kirkland_Manholes-2958	17.19	WAVERLY_WETWELL	0	45.5	37.82	12	PVC	0.01	12,784	43	283	326	2.5		WW Influent Pipe
Kirkland_Main-3181	Kirkland_Manholes-1622	253.11	Kirkland_Manholes-528	238.38	149.4	9.86	8	PVC	0.01	2,214	268	855	1,122	50.7	SM7	
Kirkland_Main-3182	Kirkland_Manholes-528	238.38	Kirkland_Manholes-1634	223.49	152.1	9.79	8	PVC	0.01	2,206	270	859	1,129	51.2	SM7	
Kirkland_Main-3183	Kirkland_Manholes-2971	508.46	Kirkland_Manholes-2972	508.32	249.3	0.06	8	PVC	0.01	167	0	4	4	2.4		
Kirkland_Main-3185	Kirkland_Manholes-2960	235.09	Kirkland_Manholes-334	218.68	321.1	5.11	8	PVC	0.01	1,594	2	4	6	0.4		
Kirkland_Main-3186	Kirkland_Manholes-2961	466.63	Kirkland_Manholes-2030	465.11	267.6	0.57	8	PVC	0.01	531	1	4	5	1		
Kirkland_Main-3187	Kirkland_Manholes-2963	352.22	Kirkland_Manholes-2962	351.81	165.5	0.25	8	PVC	0.01	351	1	4	5	1.5		
Kirkland_Main-3188	Kirkland_Manholes-2962	351.81	Kirkland_Manholes-2566	326.34	167.8	15.18	8	PVC	0.01	2,747	4	20	25	0.9		
Kirkland_Main-3189	Kirkland_Manholes-2966	369.29	Kirkland_Manholes-2965	368.34	79.6	1.19	8	PVC	0.01	770	11	4	15	2		
Kirkland_Main-3190	Kirkland_Manholes-2965	368.34	Kirkland_Manholes-2964	368.18	12	1.33	8	PVC	0.01	814	16	8	25	3		
Kirkland_Main-3191	Kirkland_Manholes-2964	368.18	Kirkland_Manholes-1916	361.73	249.5	2.59	8	PVC	0.01	1,134	17	12	29	2.6		
Kirkland_Main-3193	Kirkland_Manholes-2967	87.15	Kirkland_Manholes-2969	78.32	80.7	10.94	8	PVC	0.01	2,332	1	4	5	0.2		
Kirkland_Main-3194	Kirkland_Manholes-2968	78.98	Kirkland_Manholes-2969	78.32	100.1	0.66	8	PVC	0.01	573	2	4	6	1		
Kirkland_Main-3195	Kirkland_Manholes-2969	78.32	Kirkland_Manholes-2970	61.2	152.9	11.2	8	PVC	0.01	2,359	3	13	16	0.7		
Kirkland_Main-3196	Kirkland_Manholes-2970	61.2	Kirkland_Manholes-200	55.31	178.6	3.3	8	PVC	0.01	1,280	4	17	21	1.7		

2021 (6-year) with Proposed Improvements - Peak Hour Flow - Pipe Capacity Table

Label	Upstream Node	Upstream Invert Elevation (ft)	Downstream Node	Downstream Invert Elevation (ft)	Length (ft)	Slope (%)	Diameter (in)	Material	Manning's n	Design Capacity (gpm)	Domestic Flow (gpm)	I/I Flow (gpm)	Total Flow (gpm)	Percent Full (%)	CIP No.	Notes
Kirkland_Main-3197	Kirkland_Manholes-1445	504.92	Kirkland_Manholes-2976	503.85	186.4	0.57	8	PVC	0.01	534	20	94	113	21.2	SM14-Ex-EX269	
Kirkland_Main-3198	Kirkland_Manholes-2972	508.32	Kirkland_Manholes-2973	507.01	144.1	0.91	8	PVC	0.01	672	0	8	8	1.2		
Kirkland_Main-3199	Kirkland_Manholes-2974	507.07	Kirkland_Manholes-2973	507.01	168.1	0.04	8	PVC	0.01	133	0	4	4	3.1		
Kirkland_Main-3200	Kirkland_Manholes-2973	507.01	Kirkland_Manholes-2975	506.8	151.1	0.14	8	PVC	0.01	263	2	16	18	6.8		
Kirkland_Main-3201	Kirkland_Manholes-2975	506.8	Kirkland_Manholes-2976	503.85	22	13.39	8	PVC	0.01	2,579	2	20	22	0.9		
Kirkland_Main-3202	Kirkland_Manholes-2978	14.63	Kirkland_Manholes-2730	14.43	56	0.36	18	PVC	0.01	3,662	254	568	822	22.4	SM14-Ex-EX289	
Kirkland_Main-3203	Kirkland_Manholes-2977	14.89	Kirkland_Manholes-2978	14.63	69.2	0.38	18	PVC	0.01	3,758	253	562	815	21.7	SM14-Ex-EX289	
Kirkland_Main-3204	Kirkland_Manholes-2979	372.62	Kirkland_Manholes-2980	359.59	69.3	18.82	8	PVC	0.01	3,058	1	4	5	0.2		
Kirkland_Main-3205	Kirkland_Manholes-2980	359.59	Kirkland_Manholes-2981	355.43	97.4	4.27	8	PVC	0.01	1,457	2	8	10	0.7		
Kirkland_Main-3206	Kirkland_Manholes-2981	355.43	Kirkland_Manholes-2962	351.81	43.7	8.28	8	PVC	0.01	2,029	3	12	15	0.8		
Kirkland_Main-3207	Kirkland_Manholes-2982	168	Kirkland_Manholes-770	166.93	80.1	1.34	8	PVC	0.01	815	0	4	4	0.5		
Kirkland_Main-3208	Kirkland_Manholes-2983	235.2	Kirkland_Manholes-974	234.1	148.8	0.74	8	PVC	0.01	606	1	4	6	0.9		
Kirkland_Main-3209	Kirkland_Manholes-1342	283.15	Kirkland_Manholes-2984	277.63	191.2	2.89	10	PVC	0.01	2,172	129	378	507	23.3		
Kirkland_Main-3210	Kirkland_Manholes-2985	155.7	Kirkland_Manholes-1648	152.03	36.5	10.07	8	PVC	0.01	2,237	3	16	20	0.9		
Kirkland_Main-3211	Kirkland_Manholes-2986	155.86	Kirkland_Manholes-2985	155.7	122.4	0.13	8	PVC	0.01	255	3	8	11	4.4		
Kirkland_Main-3213	Kirkland_Manholes-2987	213	Kirkland_Manholes-2988	212.12	123.5	0.71	8	PVC	0.01	595	4	4	8	1.4		
Kirkland_Main-3214	Kirkland_Manholes-2988	212.12	Kirkland_Manholes-2989	210.69	118.1	1.21	8	PVC	0.01	776	5	9	14	1.8		
Kirkland_Main-3215	Kirkland_Manholes-2989	210.69	Kirkland_Manholes-61	205.17	54.3	10.16	8	PVC	0.01	2,247	5	13	18	0.8		
Kirkland_Main-3216	Kirkland_Manholes-2990	239.73	Kirkland_Manholes-1021	230.72	366.4	2.46	8	PVC	0.01	1,106	3	4	7	0.6		
Kirkland_Main-3217	Kirkland_Manholes-2993	335.98	Kirkland_Manholes-2939	317.33	213.5	8.74	8	PVC	0.01	2,084	3	8	11	0.5		
Kirkland_Main-3218	Kirkland_Manholes-1083	220.88	Kirkland_Manholes-2996	220.63	31.5	0.79	12	PVC	0.01	1,851	149	513	838	45.2	SM14-Ex-EX321	
Kirkland_Main-3219	Kirkland_Manholes-2995	224.98	Kirkland_Manholes-2996	220.63	134.4	3.24	8	PVC	0.01	1,269	11	4	15	1.1		
Kirkland_Main-3220	Kirkland_Manholes-2997	482.7	Kirkland_Manholes-2998	482.02	242.2	0.28	8	PVC	0.01	374	1	4	5	1.3		
Kirkland_Main-3221	Kirkland_Manholes-2998	482.02	Kirkland_Manholes-555	477.96	81.6	4.97	8	PVC	0.01	1,572	2	8	10	0.6		
Kirkland_Main-3222	Kirkland_Manholes-2999	479.74	Kirkland_Manholes-3000	475.69	102.7	3.94	8	PVC	0.01	1,400	1	4	5	0.3		
Kirkland_Main-3223	Kirkland_Manholes-3000	475.69	Kirkland_Manholes-3001	471.99	137.1	2.7	8	PVC	0.01	1,158	1	8	9	0.8		
Kirkland_Main-3224	Kirkland_Manholes-3001	471.99	Kirkland_Manholes-3002	466.73	134.5	3.91	8	PVC	0.01	1,394	2	12	14	1		
Kirkland_Main-3225	Kirkland_Manholes-3002	466.73	Kirkland_Manholes-3003	466.06	37	1.81	8	PVC	0.01	949	2	16	18	1.9		
Kirkland_Main-3226	Kirkland_Manholes-3003	466.06	Kirkland_Manholes-3004	465.24	79.1	1.04	8	PVC	0.01	718	2	20	22	3.1		
Kirkland_Main-3227	Kirkland_Manholes-3004	465.24	Kirkland_Manholes-3005	459.83	119.2	4.54	8	PVC	0.01	1,502	2	24	27	1.8		
Kirkland_Main-3228	Kirkland_Manholes-3005	459.83	Kirkland_Manholes-3006	456.1	91.8	4.07	8	PVC	0.01	1,422	3	28	31	2.2		
Kirkland_Main-3229	Kirkland_Manholes-3007	456.9	Kirkland_Manholes-3008	447.1	310.3	3.16	8	PVC	0.01	1,253	2	8	10	0.8		
Kirkland_Main-3230	Kirkland_Manholes-3009	452.69	Kirkland_Manholes-3008	447.1	238.1	2.35	8	PVC	0.01	1,080	1	4	5	0.4		
Kirkland_Main-3231	Kirkland_Manholes-3008	447.1	Kirkland_Manholes-1990	439.8	282	2.59	8	PVC	0.01	1,134	4	16	20	1.8		
Kirkland_Main-3232	Kirkland_Manholes-3010	442.64	Kirkland_Manholes-3011	434.12	219.9	3.87	8	PVC	0.01	1,388	0	4	4	0.3		
Kirkland_Main-3233	Kirkland_Manholes-3011	434.12	Kirkland_Manholes-2005	431.24	367.7	0.78	8	PVC	0.01	624	1	8	9	1.5		
Kirkland_Main-3234	Kirkland_Manholes-2005	431.24	Kirkland_Manholes-2006	430.4	270.9	0.31	8	PVC	0.01	393	2	12	14	3.6		
Kirkland_Main-3235	Kirkland_Manholes-2006	430.4	Kirkland_Manholes-2007	429.08	284.1	0.46	8	PVC	0.01	481	4	16	20	4.1		
Kirkland_Main-3236	Kirkland_Manholes-3012	424.86	Kirkland_Manholes-2011	417.75	388.4	1.83	8	PVC	0.01	954	1	4	5	0.5		
Kirkland_Main-3237	Kirkland_Manholes-3014	470	Kirkland_Manholes-3013	459.93	193.2	5.21	8	PVC	0.01	1,610	1	4	5	0.3		
Kirkland_Main-3238	Kirkland_Manholes-3013	459.93	Kirkland_Manholes-548	453.36	230.6	2.85	8	PVC	0.01	1,190	2	8	10	0.9		
Kirkland_Main-3239	Kirkland_Manholes-3020	302.86	Kirkland_Manholes-1341	299.38	98.7	3.52	8	PVC	0.01	1,324	7	49	56	4.2		
Kirkland_Main-3240	Kirkland_Manholes-3019	303.35	Kirkland_Manholes-3020	302.86	19.4	2.52	8	PVC	0.01	1,119	7	45	52	4.6		
Kirkland_Main-3241	Kirkland_Manholes-3021	303.74	Kirkland_Manholes-3019	303.35	54.4	0.72	8	PVC	0.01	597	7	41	47	7.9		
Kirkland_Main-3242	Kirkland_Manholes-3022	311.69	Kirkland_Manholes-3021	303.74	55.5	14.32	8	PVC	0.01	2,668	0	4	4	0.2		
Kirkland_Main-3243	Kirkland_Manholes-3023	312.84	Kirkland_Manholes-3021	303.74	71.1	12.8	8	PVC	0.01	2,523	6	33	39	1.5		
Kirkland_Main-3244	Kirkland_Manholes-3018	329.19	Kirkland_Manholes-3023	312.84	105.9	15.45	8	PVC	0.01	2,771	6	28	34	1.2		
Kirkland_Main-3245	Kirkland_Manholes-3017	343.42	Kirkland_Manholes-3018	329.19	180.7	7.87	8	PVC	0.01	1,978	5	24	30	1.5		
Kirkland_Main-3246	Kirkland_Manholes-3015	371.23	Kirkland_Manholes-3017	343.42	160.4	17.33	8	PVC	0.01	2,935	4	20	25	0.8		
Kirkland_Main-3247	Kirkland_Manholes-3016	372.66	Kirkland_Manholes-3015	371.23	122.5	1.17	8	PVC	0.01	762	3	16	20	2.6		
Kirkland_Main-3248	Kirkland_Manholes-3024	372.77	Kirkland_Manholes-1930	369.31	206.2	1.68	8	PVC	0.01	913	2	4	6	0.6		
Kirkland_Main-3250	Kirkland_Manholes-3025	189.5	Kirkland_Manholes-3026	186.45	198.2	1.54	8	PVC	0.01	875	1	4	5	0.6		
Kirkland_Main-3251	Kirkland_Manholes-3026	186.45	Kirkland_Manholes-1035	182.7	331	1.13	8	PVC	0.01	750	2	9	10	1.4		
Kirkland_Main-3252	Kirkland_Manholes-3028	332.75	Kirkland_Manholes-1582	332.21	111.6	0.48	12	PVC	0.01	1,446	48	183	232	16	SM14-Ex-EX206	
Kirkland_Main-3253	Kirkland_Manholes-3027	333.49	Kirkland_Manholes-3028	332.75	24.2	3.06	8	PVC	0.01	1,233	4	4	8	0.6		
Kirkland_Main-3257	Kirkland_Manholes-3031	384.74	Kirkland_Manholes-1926	383.42	23.1	5.72	12	PVC	0.01	4,970	159	537	696	14		
Kirkland_Main-3258	Kirkland_Manholes-1	73.25	Kirkland_Manholes-21	62.08	92.5	12.08	8	PVC	0.01	2,451	8	22	30	1.2		
Kirkland_Main-3259	Kirkland_Manholes-20	65.72	Kirkland_Manholes-21	62.08	153.9	2.36	8	PVC	0.01	1,084	0	4	4	0.4		
Kirkland_Main-3260	Kirkland_Manholes-3070	330.73	Kirkland_Manholes-927	307.71	144.8	15.9	8	PVC	0.01	2,811	7	4	11	0.4		
Kirkland_Main-3261	Kirkland_Manholes-3078	370.92	Kirkland_Manholes-3077	366.14	136.6	3.5	8	PVC	0.01	1,319	0	4	4	0.3		
Kirkland_Main-3262	Kirkland_Manholes-3077	366.14	Kirkland_Manholes-3076	363.7	26.9	9.07	8	PVC	0.01	2,124	1	8	9	0.4		
Kirkland_Main-3263	Kirkland_Manholes-3076	363.7	Kirkland_Manholes-3075	343.97	114.4	17.24	8	PVC	0.01	2,928	1	12	13	0.4		

2021 (6-year) with Proposed Improvements - Peak Hour Flow - Pipe Capacity Table

Label	Upstream Node	Upstream Invert Elevation (ft)	Downstream Node	Downstream Invert Elevation (ft)	Length (ft)	Slope (%)	Diameter (in)	Material	Manning's n	Design Capacity (gpm)	Domestic Flow (gpm)	I/I Flow (gpm)	Total Flow (gpm)	Percent Full (%)	CIP No.	Notes
Kirkland_Main-3264	Kirkland_Manholes-3075	343.97	Kirkland_Manholes-3079	316.42	161.6	17.05	8	PVC	0.01	2,911	1	16	17	0.6		
Kirkland_Main-3265	Kirkland_Manholes-3079	316.42	Kirkland_Manholes-3074	303.68	195.1	6.53	8	PVC	0.01	1,802	1	20	22	1.2		
Kirkland_Main-3266	Kirkland_Manholes-3074	303.68	Kirkland_Manholes-3073	289.21	131.6	10.99	8	PVC	0.01	2,337	2	24	26	1.1		
Kirkland_Main-3267	Kirkland_Manholes-3073	289.21	Kirkland_Manholes-3072	273.11	354	4.55	8	PVC	0.01	1,504	2	28	30	2		
Kirkland_Main-3268	Kirkland_Manholes-3072	273.11	Kirkland_Manholes-3071	273.04	17.1	0.4	8	PVC	0.01	445	2	33	35	7.8		
Kirkland_Main-3269	Kirkland_Manholes-3071	273.04	Kirkland_Manholes-1317	271.64	20.2	6.94	8	PVC	0.01	1,858	2	37	39	2.1		
Kirkland_Main-3270	Kirkland_Manholes-3081	373.55	Kirkland_Manholes-1319	372.4	30.4	3.78	8	PVC	0.01	1,371	79	191	270	19.7		
Kirkland_Main-3271	Kirkland_Manholes-3080	382.34	Kirkland_Manholes-3081	377.27	187.3	2.71	8	PVC	0.01	1,160	0	4	4	0.4		Drop Connection
Kirkland_Main-3272	Kirkland_Manholes-3083	435.32	Kirkland_Manholes-3082	428.49	311.8	2.19	8	PVC	0.01	1,044	2	4	6	0.5		
Kirkland_Main-3273	Kirkland_Manholes-3084	333.87	Kirkland_Manholes-3085	329.83	142	2.85	8	PVC	0.01	1,189	0	4	4	0.3		
Kirkland_Main-3274	Kirkland_Manholes-3085	329.83	Kirkland_Manholes-3086	304.85	242	10.32	12	PVC	0.01	6,678	1	8	9	0.1		
Kirkland_Main-3275	Kirkland_Manholes-3086	304.85	Kirkland_Manholes-3087	296.66	149.5	5.48	12	PVC	0.01	4,865	4	12	16	0.3		
Kirkland_Main-3276	Kirkland_Manholes-3087	296.66	Kirkland_Manholes-3088	288.51	213.4	3.82	8	Concrete	0.013	1,060	4	16	20	1.9		
Kirkland_Main-3277	Kirkland_Manholes-3088	288.51	Kirkland_Manholes-3089	268.55	207	9.64	8	Concrete	0.013	1,684	4	20	24	1.4		
Kirkland_Main-3278	Kirkland_Manholes-3089	268.55	Kirkland_Manholes-2427	267.5	263	0.4	8	Concrete	0.013	343	57	24	82	23.8		
Kirkland_Main-3279	Kirkland_Manholes-2197	480.89	Kirkland_Manholes-1417	477.64	213.1	1.52	8	PVC	0.01	871	2	12	14	1.7		
Kirkland_Main-3280	Kirkland_Manholes-3090	416.74	Kirkland_Manholes-2916	416.17	246	0.23	8	PVC	0.01	339	2	4	6	1.7		
Kirkland_Main-3281	Kirkland_Manholes-3092	96.93	Kirkland_Manholes-173	34.1	219.6	28.61	8	PVC	0.01	3,771	2	9	11	0.3		
Kirkland_Main-3282	Kirkland_Manholes-3091	115.12	Kirkland_Manholes-3092	96.93	129.4	14.06	8	PVC	0.01	2,644	1	4	6	0.2		
Kirkland_Main-3283	Kirkland_Manholes-3093	117.97	Kirkland_Manholes-3094	63.71	388.1	13.98	8	PVC	0.01	2,636	2	4	6	0.2		
Kirkland_Main-3284	Kirkland_Manholes-3094	63.71	Kirkland_Manholes-437	58.56	159.5	3.23	8	PVC	0.01	1,267	5	9	13	1.1		
Kirkland_Main-3285	Kirkland_Manholes-3095	195.85	Kirkland_Manholes-2070	185.96	195.6	5.06	8	PVC	0.01	1,585	1	4	5	0.3		
Kirkland_Main-3287	Kirkland_Manholes-205	228.15	Kirkland_Manholes-3096	204.91	232.4	10	8	PVC	0.01	2,229	16	35	51	2.3	SM14-Ex-EX57	
Kirkland_Main-3288	Kirkland_Manholes-3096	204.91	Kirkland_Manholes-234	184.45	273.4	7.48	8	PVC	0.01	1,929	22	48	69	3.6	SM14-Ex-EX57	
Kirkland_Main-3289	Kirkland_Manholes-1218	220.85	Kirkland_Manholes-3096	204.91	278.6	5.72	8	PVC	0.01	1,686	5	9	13	0.8	SM14-Ex-EX59	
Kirkland_Main-3290	Kirkland_Manholes-3097	172.14	Kirkland_Manholes-1639	169.94	87.4	2.52	8	PVC	0.01	1,119	16	85	101	9.1	SM14-Ex-EX202	
Kirkland_Main-3291	Kirkland_Manholes-3098	172.34	Kirkland_Manholes-3097	172.14	17.4	1.15	8	PVC	0.01	757	16	81	97	12.8	SM14-Ex-EX202	
Kirkland_Main-3292	Kirkland_Manholes-1640	188.59	Kirkland_Manholes-3098	174.29	160.1	8.93	8	PVC	0.01	2,107	4	8	12	0.6	SM14-Ex-EX203	Drop Connection
Kirkland_Main-3293	Kirkland_Manholes-2696	172.94	Kirkland_Manholes-3098	172.34	33	1.82	8	PVC	0.01	951	12	69	81	8.5	SM14-Ex-EX202	
Kirkland_Main-3294	Kirkland_Manholes-3099	77.83	Kirkland_Manholes-2204	53	99.4	24.97	8	PVC	0.01	3,523	3	12	15	0.4		
Kirkland_Main-3295	Kirkland_Manholes-2725	97.33	Kirkland_Manholes-3099	77.83	158.8	12.28	8	PVC	0.01	2,470	2	6	8	0.3		
Kirkland_Main-3296	Kirkland_Manholes-2663	50.64	Kirkland_Manholes-3043	37.72	98.7	13.08	12	PVC	0.01	7,519	140	440	580	7.7		
Kirkland_Main-3297	Kirkland_Manholes-3043	37.72	Kirkland_Manholes-3044	18.06	181	10.86	12	PVC	0.01	6,850	140	446	586	8.6		
Kirkland_Main-3298	Kirkland_Manholes-3106	117	Kirkland_Manholes-3105	116.05	61.3	1.55	8	PVC	0.01	877	16	91	107	12.2	SM10	
Kirkland_Main-3299	Kirkland_Manholes-3107	127.14	Kirkland_Manholes-3106	117	167.2	6.07	8		0.012	1,447	16	82	98	6.8	SM10	
Kirkland_Main-3300	Kirkland_Manholes-1180	118.31	Kirkland_Manholes-3108	104.6	196.1	6.99	8	PVC	0.01	1,864	1	8	9	0.5	SM10	
Kirkland_Main-3301	Kirkland_Manholes-3103	113.84	Kirkland_Manholes-3109	110.43	345.5	0.99	12	PVC	0.01	2,065	19	124	143	6.9	SM10	
Kirkland_Main-3302	Kirkland_Manholes-3109	110.43	Kirkland_Manholes-3108	104.6	85.9	6.79	8	PVC	0.01	1,837	20	132	152	8.3	SM10	
Kirkland_Main-3303	Kirkland_Manholes-3108	104.6	Kirkland_Manholes-513	81.7	198.3	11.55	8	PVC	0.01	2,396	22	148	170	7.1	SM10	
Kirkland_Main-3305	Kirkland_Manholes-3105	116.05	Kirkland_Manholes-3104	114.41	128.6	1.28	8	PVC	0.01	796	18	99	116	14.6	SM10	
Kirkland_Main-3306	Kirkland_Manholes-3110	73.01	Kirkland_Manholes-306	19.99	234	22.66	8	PVC	0.01	3,356	25	106	131	3.9	SM10	
Kirkland_Main-3307	Kirkland_Manholes-305	74.69	Kirkland_Manholes-3110	73.01	8.3	20.21	8	PVC	0.01	3,169	24	97	121	3.8	SM10	
Kirkland_Main-3308	Kirkland_Manholes-3114	174.9	Kirkland_Manholes-3113	173.48	159.7	0.89	8	PVC	0.01	665	36	4	40	6		
Kirkland_Main-3309	Kirkland_Manholes-3113	173.48	Kirkland_Manholes-3112	173.15	82.5	0.4	8	PVC	0.01	446	36	8	44	9.9		
Kirkland_Main-3310	Kirkland_Manholes-3112	173.15	Kirkland_Manholes-3111	170.05	248.7	1.25	8	PVC	0.01	787	36	12	48	6.1		
Kirkland_Main-3311	Kirkland_Manholes-3111	170.05	Kirkland_Manholes-1125	167.88	64.7	3.36	8	PVC	0.01	1,292	36	16	52	4.1		
Kirkland_Main-3314	Kirkland_Manholes-3116	330.46	Kirkland_Manholes-2933	328.79	108.5	1.54	8	PVC	0.01	875	1	4	5	0.6		
Kirkland_Main-3315	Kirkland_Manholes-3117	134.38	Kirkland_Manholes-161	132.09	173.7	1.32	8	PVC	0.01	809	2	4	7	0.8		
Kirkland_Main-3316	Kirkland_Manholes-3118	331.75	Kirkland_Manholes-2934	330.48	196.7	0.65	8	PVC	0.01	567	1	4	5	0.8		
Kirkland_Main-3317	Kirkland_Manholes-3119	327.7	Kirkland_Manholes-2932	327.56	161.9	0.09	8	PVC	0.01	207	3	20	24	11.5		
Kirkland_Main-3318	Kirkland_Manholes-2933	328.79	Kirkland_Manholes-3119	327.7	135.5	0.8	8	PVC	0.01	632	2	8	10	1.6		
Kirkland_Main-3319	Kirkland_Manholes-2934	330.48	Kirkland_Manholes-3119	327.7	250.4	1.11	8	PVC	0.01	743	1	8	9	1.3		
Kirkland_Main-3320	Kirkland_Manholes-839	334.68	Kirkland_Manholes-3121	329.59	187.8	2.71	8	PVC	0.01	1,161	16	41	57	4.9		
Kirkland_Main-3321	Kirkland_Manholes-3120	345	Kirkland_Manholes-3121	344.79	53.6	0.4	8	PVC	0.01	446	1	4	5	1.2		Drop Connection
Kirkland_Main-3322	Kirkland_Manholes-3121	329.59	Kirkland_Manholes-3122	329.14	65.3	0.69	8	PVC	0.01	585	17	49	66	11.3		
Kirkland_Main-3323	Kirkland_Manholes-3122	329.14	Kirkland_Manholes-840	326.85	337.3	0.68	8	PVC	0.01	581	20	53	73	12.5		
Kirkland_Main-3326	Kirkland_Manholes-3123	227.69	Kirkland_Manholes-2497	194.88	329.5	9.96	8	PVC	0.01	2,225	8	4	12	0.5	SM14-Ex-EX236	
Kirkland_Main-3332	Kirkland_Manholes-3125	215.03	Kirkland_Manholes-3124	203.5	175.2	6.58	8	PVC	0.01	1,809	1	4	5	0.3	SM14-Ex-EX20	
Kirkland_Main-3333	Kirkland_Manholes-3124	203.5	Kirkland_Manholes-3126	177.5	261.8	9.93	8	PVC	0.01	2,222	2	9	10	0.5	SM14-Ex-EX20	
Kirkland_Main-3336	Kirkland_Manholes-3006	456.1	Kirkland_Manholes-539	454.38	165.4	1.04	8	PVC	0.01	719	3	33	36	5		
Kirkland_Main-3337	Kirkland_Manholes-555	477.96	Kirkland_Manholes-535	472.49	159.7	3.43	8	PVC	0.01	1,305	2	12	15	1.1		
Kirkland_Main-3338	Kirkland_Manholes-2509	126.48	Kirkland_Manholes-2508	120.01	60.3	10.73	8	PVC	0.01	2,309	3	12	15	0.6	SM14-Ex-EX229	

2021 (6-year) with Proposed Improvements - Peak Hour Flow - Pipe Capacity Table

Label	Upstream Node	Upstream Invert Elevation (ft)	Downstream Node	Downstream Invert Elevation (ft)	Length (ft)	Slope (%)	Diameter (in)	Material	Manning's n	Design Capacity (gpm)	Domestic Flow (gpm)	I/I Flow (gpm)	Total Flow (gpm)	Percent Full (%)	CIP No.	Notes
Kirkland_Main-3339	Kirkland_Manholes-2566	326.34	Kirkland_Manholes-2567	316.05	133.4	7.71	8	PVC	0.01	1,958	4	24	29	1.5	SM14-Ex-EX307	
Kirkland_Main-3340	Kirkland_Manholes-728	70.86	Kirkland_Manholes-2928	60.36	293.8	3.57	18	PVC	0.01	11,586	142	544	686	5.9		
Kirkland_Main-3341	Kirkland_Manholes-3127	324.33	Kirkland_Manholes-3128	323.94	81.4	0.48	8	PVC	0.01	488	0	4	4	0.9	SM14-Ex-EX54	
Kirkland_Main-3344	Kirkland_Manholes-3129	308.71	Kirkland_Manholes-2956	306.62	67.6	3.09	8	PVC	0.01	1,240	2	12	14	1.1		
Kirkland_Main-3345	Kirkland_Manholes-3130	70.51	Kirkland_Manholes-3131	61.63	403.3	2.2	8	PVC	0.01	1,046	0	4	4	0.4		
Kirkland_Main-3346	Kirkland_Manholes-3131	61.63	Kirkland_Manholes-201	56.98	404.6	1.15	8	PVC	0.01	756	0	9	9	1.1		
Kirkland_Main-3347	Kirkland_Manholes-3132	514.05	Kirkland_Manholes-3133	512.61	110	1.31	8	PVC	0.01	807	0	4	4	0.6		
Kirkland_Main-3348	Kirkland_Manholes-3133	512.61	Kirkland_Manholes-1441	509.69	156.4	1.87	8	PVC	0.01	963	0	8	9	0.9		
Kirkland_Main-3349	Kirkland_Manholes-3134	66.29	Kirkland_Manholes-1828	65.79	294	0.17	15	PVC	0.01	1,554	116	684	1,150	74	SM14-2035-DF11	
Kirkland_Main-3350	Kirkland_Manholes-2994	67.86	Kirkland_Manholes-3135	66.49	13.6	10.06	15	PVC	0.01	11,957	114	667	1,132	9.5		
Kirkland_Main-3351	Kirkland_Manholes-3135	66.49	Kirkland_Manholes-3134	66.29	136.2	0.15	15	PVC	0.01	1,460	114	676	1,141	78.1	SM14-2035-DF11	
Kirkland_Main-3353	Kirkland_Manholes-3137	192.8	Kirkland_Manholes-1304	180.12	128.3	9.88	8	PVC	0.01	2,216	5	16	21	1	SM14-Ex-EX106	
Kirkland_Main-3354	Kirkland_Manholes-1305	222.35	Kirkland_Manholes-3137	192.8	245.9	12.02	8	PVC	0.01	2,444	3	8	12	0.5	SM14-Ex-EX106	
Kirkland_Main-3356	Kirkland_Manholes-3138	280.24	Kirkland_Manholes-672	266.2	264	5.32	8	PVC	0.01	1,626	1	4	5	0.3		
Kirkland_Main-3357	Kirkland_Manholes-3139	191.69	Kirkland_Manholes-769	165.1	236	11.27	8	PVC	0.01	2,367	2	4	6	0.3		
Kirkland_Main-3358	Kirkland_Manholes-3140	184.54	Kirkland_Manholes-520	182.65	320.9	0.59	8	PVC	0.01	541	2	8	11	2	SM10	
Kirkland_Main-3359	Kirkland_Manholes-526	148.56	Kirkland_Manholes-3141	141.49	317.3	2.23	8	PVC	0.01	1,052	5	33	38	3.6	SM10	
Kirkland_Main-3360	Kirkland_Manholes-3141	141.49	Kirkland_Manholes-3107	127.14	314.8	4.56	8	PVC	0.01	1,505	12	66	78	5.2	SM10	
Kirkland_Main-3361	Kirkland_Manholes-495	169.48	Kirkland_Manholes-3142	153.62	319.4	4.97	8	PVC	0.01	1,571	4	16	21	1.3	SM10	
Kirkland_Main-3362	Kirkland_Manholes-3142	153.62	Kirkland_Manholes-3141	141.49	269.1	4.51	8	PVC	0.01	1,497	7	25	31	2.1	SM10	
Kirkland_Main-3366	Kirkland_Manholes-3148	304.94	Kirkland_Manholes-3147	292.59	197.5	6.25	8	PVC	0.01	1,763	2	4	6	0.3		
Kirkland_Main-3367	Kirkland_Manholes-3147	292.59	Kirkland_Manholes-3146	290.48	68.4	3.08	8	PVC	0.01	1,238	2	8	10	0.8		
Kirkland_Main-3368	Kirkland_Manholes-3146	290.48	Kirkland_Manholes-3145	283.25	74.7	9.68	8	PVC	0.01	2,194	2	12	14	0.6		
Kirkland_Main-3369	Kirkland_Manholes-3149	279.32	Kirkland_Manholes-672	266.2	331.7	3.96	8	PVC	0.01	1,402	8	49	57	4		
Kirkland_Main-3370	Kirkland_Manholes-2888	290.53	Kirkland_Manholes-3149	279.32	39.9	28.13	8	PVC	0.01	3,739	5	20	25	0.7		
Kirkland_Main-3371	Kirkland_Manholes-3145	283.25	Kirkland_Manholes-3149	279.32	272.6	1.44	8	PVC	0.01	847	3	24	27	3.2		
Kirkland_Main-3372	Kirkland_Manholes-1382	428.64	Kirkland_Manholes-3150	427.16	302.5	0.49	8	PVC	0.01	493	2	8	10	2.1		
Kirkland_Main-3373	Kirkland_Manholes-3150	427.16	Kirkland_Manholes-1347	427.05	67.8	0.16	8	PVC	0.01	284	3	12	15	5.4		
Kirkland_Main-3375	Kirkland_Manholes-2803	158.22	Kirkland_Manholes-3151	154.6	93.3	3.88	8	PVC	0.01	1,389	34	126	160	11.5	SM14-Ex-EX313	
Kirkland_Main-3376	Kirkland_Manholes-2609	193.8	Kirkland_Manholes-3152	172.55	189.8	11.2	8	PVC	0.01	2,359	1	8	9	0.4		
Kirkland_Main-3377	Kirkland_Manholes-3154	166.6	Kirkland_Manholes-3153	166.34	271.7	0.1	8	PVC	0.01	218	23	57	80	36.7	SM14-Ex-EX294	
Kirkland_Main-3378	Kirkland_Manholes-2629	172.55	Kirkland_Manholes-3154	166.6	85	7	8	PVC	0.01	1,865	12	24	37	2	SM14-Ex-EX295	
Kirkland_Main-3379	Kirkland_Manholes-3155	166.88	Kirkland_Manholes-3154	166.6	37.7	0.74	8	PVC	0.01	607	10	28	38	6.3	SM14-Ex-EX294	
Kirkland_Main-3380	Kirkland_Manholes-2637	187.87	Kirkland_Manholes-3156	168.61	186.4	10.33	8	PVC	0.01	2,267	10	20	30	1.3	SM14-Ex-EX294	
Kirkland_Main-3381	Kirkland_Manholes-3156	168.61	Kirkland_Manholes-3155	166.88	387	0.45	8	PVC	0.01	471	10	24	34	7.2	SM14-Ex-EX294	
Kirkland_Main-3382	Kirkland_Manholes-3153	166.34	O-37	146.26	92.7	21.67	8	PVC	0.01	3,282	96	289	385	11.7	SM14-Ex-EX294	
Kirkland_Main-3383	Kirkland_Manholes-3157	158.55	O-36	147.51	94.1	11.73	8	PVC	0.01	2,415	18	65	84	3.5	SM14-Ex-EX281	
Kirkland_Main-3384	Kirkland_Manholes-3158	172.29	Kirkland_Manholes-3157	158.55	121.1	11.35	8	PVC	0.01	2,375	1	4	5	0.2	SM14-Ex-EX281	
Kirkland_Main-3385	Kirkland_Manholes-2628	186	Kirkland_Manholes-3159	168.84	190.6	9	8	PVC	0.01	2,115	16	53	68	3.2	SM14-Ex-EX281	
Kirkland_Main-3386	Kirkland_Manholes-3159	168.84	Kirkland_Manholes-3157	158.55	57.7	17.84	8	PVC	0.01	2,978	17	57	74	2.5	SM14-Ex-EX281	Drop Connection
Kirkland_Main-3387	Kirkland_Manholes-2601	228.74	Kirkland_Manholes-3160	174.95	323	16.65	8	PVC	0.01	2,877	38	130	169	5.9	SM14-Ex-EX299	
Kirkland_Main-3388	Kirkland_Manholes-2796	185.45	Kirkland_Manholes-3161	177.36	230.8	3.5	8	PVC	0.01	1,320	7	20	27	2.1	SM14-Ex-EX296	
Kirkland_Main-3389	Kirkland_Manholes-2599	217.5	Kirkland_Manholes-3161	177.36	310.3	12.94	8	PVC	0.01	2,536	5	16	21	0.8	SM14-Ex-EX301	
Kirkland_Main-3390	Kirkland_Manholes-3162	175.71	Kirkland_Manholes-3160	174.95	166.9	0.46	8	PVC	0.01	476	13	45	58	12.2	SM14-Ex-EX296	
Kirkland_Main-3391	Kirkland_Manholes-3161	177.36	Kirkland_Manholes-3162	175.71	336.3	0.49	8	PVC	0.01	494	13	41	53	10.8	SM14-Ex-EX296	
Kirkland_Main-3392	Kirkland_Manholes-3160	174.95	Kirkland_Manholes-3163	173.85	309.7	0.36	8	PVC	0.01	420	53	179	232	55.2	SM14-Ex-EX296	
Kirkland_Main-3393	Kirkland_Manholes-3163	173.85	Kirkland_Manholes-3152	172.55	286.2	0.45	8	PVC	0.01	475	63	199	262	55.2	SM14-Ex-EX296	
Kirkland_Main-3394	Kirkland_Manholes-2600	217.97	Kirkland_Manholes-3163	173.85	279.5	15.78	8	PVC	0.01	2,801	9	16	25	0.9	SM14-Ex-EX298	
Kirkland_Main-3395	Kirkland_Manholes-3152	172.55	Kirkland_Manholes-3164	171.21	150.7	0.89	8	PVC	0.01	665	64	212	276	41.5	SM14-Ex-EX296	
Kirkland_Main-3397	Kirkland_Manholes-3164	171.21	Kirkland_Manholes-3153	166.34	136.7	3.56	8	PVC	0.01	1,331	72	228	300	22.5	SM14-Ex-EX296	
Kirkland_Main-3398	Kirkland_Manholes-2123	164.83	Kirkland_Manholes-3165	156.79	188.1	4.27	8	PVC	0.01	1,457	4	12	16	1.1	SM14-Ex-EX238	
Kirkland_Main-3399	Kirkland_Manholes-2493	157.85	Kirkland_Manholes-3165	156.79	186.1	0.57	8	PVC	0.01	532	1	4	5	0.9	SM14-Ex-EX237	
Kirkland_Main-3400	Kirkland_Manholes-3165	156.79	O-34	148.75	44.4	18.12	8	PVC	0.01	3,001	5	20	26	0.9	SM14-Ex-EX238	
Kirkland_Main-3401	Kirkland_Manholes-3151	154.6	O-38	150	83	5.54	12	PVC	0.01	4,894	34	130	164	3.3	SM14-Ex-EX313	
Kirkland_Main-3402	Kirkland_Manholes-3166	161.38	Kirkland_Manholes-3167	157.21	249.9	1.67	6	Concrete	0.013	325	9	12	21	6.5		
Kirkland_Main-3403	Kirkland_Manholes-3167	157.21	O-30	156.87	20.3	1.67	6	Concrete	0.013	326	9	16	25	7.7		Drop Connection
Kirkland_Main-3404	Kirkland_Manholes-2068	163.08	O-43	162.02	20.5	5.16	8	PVC	0.01	1,602	15	65	80	5	SM14-Ex-EX198	
Kirkland_Main-3405	Kirkland_Manholes-2069	170.43	Kirkland_Manholes-3168	162.8	388.5	1.96	8	PVC	0.01	988	86	98	183	18.6	SM14-Ex-EX199	
Kirkland_Main-3406	Kirkland_Manholes-3168	162.8	O-29	162.02	22.8	3.42	8	PVC	0.01	1,305	87	102	189	14.5	SM14-Ex-EX199	
Kirkland_Main-3407	Kirkland_Manholes-3169	153.32	Kirkland_Manholes-1708	148.34	451.5	1.1	12	PVC	0.01	2,183	0	8	8	0.4	SM14-Ex-EX197	
Kirkland_Main-3408	Kirkland_Manholes-3170	175.74	O-28	173.9	72.2	2.55	8	PVC	0.01	1,125	0	4	4	0.4		
Kirkland_Main-3409	Kirkland_Manholes-1642	158.76	O-27	153.59	147.5	3.5	12	PVC	0.01	3,891	292	973	1,264	32.5	SM7	

2021 (6-year) with Proposed Improvements - Peak Hour Flow - Pipe Capacity Table

Label	Upstream Node	Upstream Invert Elevation (ft)	Downstream Node	Downstream Invert Elevation (ft)	Length (ft)	Slope (%)	Diameter (in)	Material	Manning's n	Design Capacity (gpm)	Domestic Flow (gpm)	I/I Flow (gpm)	Total Flow (gpm)	Percent Full (%)	CIP No.	Notes
Kirkland_Main-3410	Kirkland_Manholes-1646	177.66	O-23	163.59	79.6	17.67	8	PVC	0.01	2,963	0	4	4	0.1	SM14-Ex-EX174	
Kirkland_Main-3411	Kirkland_Manholes-1602	196.74	Kirkland_Manholes-3171	164.9	343.8	9.26	8	PVC	0.01	2,146	84	244	328	15.3	SM14-Ex-EX172	
Kirkland_Main-3412	Kirkland_Manholes-3171	164.9	O-22	163.59	29	4.51	12	PVC	0.01	4,416	150	431	581	13.2	SM14-Ex-EX121	
Kirkland_Main-3413	Kirkland_Manholes-3172	165.73	Kirkland_Manholes-3171	164.9	49.5	1.68	8	PVC	0.01	913	66	183	249	27.3	SM14-Ex-EX121	
Kirkland_Main-3414	Kirkland_Manholes-1598	169.75	Kirkland_Manholes-3172	165.73	259.8	1.55	8	PVC	0.01	877	66	179	245	27.9	SM14-Ex-EX121	
Kirkland_Main-3415	Kirkland_Manholes-3173	155.95	O-16	154.93	82	1.24	8	PVC	0.01	787	8	41	49	6.2		
Kirkland_Main-3416	Kirkland_Manholes-1274	175.64	Kirkland_Manholes-3173	155.95	196.1	10.04	8	PVC	0.01	2,234	7	33	40	1.8		
Kirkland_Main-3417	Kirkland_Manholes-458	212.1	O-14	173.22	270.2	14.39	8	PVC	0.01	2,674	35	126	161	6	SM14-Ex-EX67	
Kirkland_Main-3418	Kirkland_Manholes-3174	172.82	O-13	166.72	27.1	22.51	8	PVC	0.01	3,345	2	20	23	0.7		
Kirkland_Main-3419	Kirkland_Manholes-472	192.62	Kirkland_Manholes-3174	172.82	71.3	27.75	8	PVC	0.01	3,714	2	16	19	0.5		
Kirkland_Main-3420	Kirkland_Manholes-466	159.47	O-12	159.29	18.7	0.96	8	PVC	0.01	691	15	57	72	10.4	SM14-Ex-EX45	
Kirkland_Main-3421	Kirkland_Manholes-786	173.41	O-11	153.37	102.1	19.63	8	PVC	0.01	3,124	70	301	372	11.9		
Kirkland_Main-3422	Kirkland_Manholes-3175	156.47	Kirkland_Manholes-1105	155.49	245.4	0.4	12	PVC	0.01	1,315	125	286	411	31.3	SM14-2021-DF3	
Kirkland_Main-3424	Kirkland_Manholes-3176	350.9	Kirkland_Manholes-2993	335.98	232.3	6.42	8	PVC	0.01	1,787	1	4	5	0.3		
Kirkland_Main-3425	Kirkland_Manholes-3183	400.11	Kirkland_Manholes-3182	398.7	286.4	0.49	8	PVC	0.01	495	0	4	4	0.8		
Kirkland_Main-3426	Kirkland_Manholes-3182	398.7	Kirkland_Manholes-3181	397.83	157.2	0.55	8	PVC	0.01	525	0	8	8	1.6		
Kirkland_Main-3427	Kirkland_Manholes-3181	397.83	Kirkland_Manholes-3180	396.32	304.9	0.5	8	PVC	0.01	496	0	12	13	2.5		
Kirkland_Main-3428	Kirkland_Manholes-3177	399.25	Kirkland_Manholes-3178	398.25	237	0.42	8	PVC	0.01	458	0	8	8	1.8		
Kirkland_Main-3429	Kirkland_Manholes-3178	398.25	Kirkland_Manholes-3179	397.18	174.5	0.61	8	PVC	0.01	552	0	12	12	2.2		
Kirkland_Main-3430	Kirkland_Manholes-3179	397.18	Kirkland_Manholes-3180	396.32	145.5	0.59	8	PVC	0.01	542	0	16	16	3		
Kirkland_Main-3431	Kirkland_Manholes-3180	396.32	Kirkland_Manholes-3186	394.01	374.3	0.62	8	PVC	0.01	554	1	33	33	6	SM14-Ex-EX207	
Kirkland_Main-3432	Kirkland_Manholes-3186	394.01	Kirkland_Manholes-3187	393.39	93.6	0.66	8	PVC	0.01	574	1	37	38	6.6	SM14-Ex-EX207	
Kirkland_Main-3433	Kirkland_Manholes-3187	393.39	Kirkland_Manholes-3188	392.16	246.3	0.5	8	PVC	0.01	498	1	41	42	8.4		
Kirkland_Main-3434	Kirkland_Manholes-3185	403.06	Kirkland_Manholes-3184	397.63	317.3	1.71	8	PVC	0.01	922	0	4	4	0.4		
Kirkland_Main-3435	Kirkland_Manholes-3184	397.63	Kirkland_Manholes-3189	393.42	318.2	1.32	8	PVC	0.01	811	37	8	45	5.5		
Kirkland_Main-3436	Kirkland_Manholes-3189	393.42	Kirkland_Manholes-3188	392.16	76.3	1.65	8	PVC	0.01	906	37	16	53	5.9		
Kirkland_Main-3437	Kirkland_Manholes-3188	392.16	Kirkland_Manholes-1929	374.67	305.2	5.73	8	PVC	0.01	1,688	38	61	99	5.9		
Kirkland_Main-3438	Kirkland_Manholes-3192	307.27	Kirkland_Manholes-3191	306.22	126.1	0.84	8	PVC	0.01	644	1	4	5	0.8		
Kirkland_Main-3439	Kirkland_Manholes-3191	306.22	Kirkland_Manholes-2894	306.1	28.9	0.4	8	PVC	0.01	446	2	12	14	3.2		
Kirkland_Main-3440	Kirkland_Manholes-3190	323.62	Kirkland_Manholes-3191	306.22	169.1	10.29	8	PVC	0.01	2,262	1	4	5	0.2		
Kirkland_Main-3441	Kirkland_Manholes-620	55.37	Kirkland_Manholes-3193	49.78	279.6	2	8	PVC	0.01	997	0	8	8	0.8		
Kirkland_Main-3442	Kirkland_Manholes-3193	49.78	Kirkland_Manholes-619	48.43	193	0.7	8	PVC	0.01	590	0	16	17	2.8		
Kirkland_Main-3443	Kirkland_Manholes-1685	57.24	Kirkland_Manholes-731	53.54	120.6	3.07	12	PVC	0.01	3,640	100	457	557	15.3	SM5	
Kirkland_Main-3444	Kirkland_Manholes-1852	284.97	Kirkland_Manholes-3145	283.25	105.1	1.64	8	PVC	0.01	902	0	8	9	0.9		
Kirkland_Main-3445	Kirkland_Manholes-2130	161.57	O-31	156.67	31.5	15.55	8	PVC	0.01	2,780	23	24	48	1.7	SM14-Ex-EX235	
Kirkland_Main-3446	Kirkland_Manholes-3195	259.3	Kirkland_Manholes-682	258.64	178.4	0.37	8	PVC	0.01	429	1	12	13	3		
Kirkland_Main-3447	Kirkland_Manholes-686	272.79	Kirkland_Manholes-3195	262.73	170.3	5.91	8	PVC	0.01	1,714	0	4	4	0.3		Drop Connection
Kirkland_Main-3448	Kirkland_Manholes-3194	260.3	Kirkland_Manholes-3195	259.3	92.2	1.08	8	PVC	0.01	733	0	4	4	0.6		
Kirkland_Main-3450	Kirkland_Manholes-3198	69.13	Kirkland_Manholes-2805	68.41	178.9	0.4	8	PVC	0.01	446	0	24	24	5.5		
Kirkland_Main-3451	Kirkland_Manholes-3197	131.57	Kirkland_Manholes-3196	122.5	306.9	2.96	8	PVC	0.01	1,212	2	8	10	0.8	SM10	
Kirkland_Main-3453	Kirkland_Manholes-2804	82.15	Kirkland_Manholes-3198	69.13	175.8	7.41	8	PVC	0.01	1,919	0	6	6	0.3		
Kirkland_Main-3454	Kirkland_Manholes-3200	88.54	Kirkland_Manholes-3199	84.4	128.7	3.22	8	PVC	0.01	1,264	0	6	6	0.5		
Kirkland_Main-3455	Kirkland_Manholes-3199	84.4	Kirkland_Manholes-3198	69.13	210.2	7.27	8	PVC	0.01	1,900	0	12	12	0.6		
Kirkland_Main-3456	Kirkland_Manholes-2778	255.64	Kirkland_Manholes-3201	243.59	148	8.14	8	PVC	0.01	2,012	22	16	38	1.9		
Kirkland_Main-3457	Kirkland_Manholes-3201	243.59	Kirkland_Manholes-2802	238.36	22.3	23.44	8	PVC	0.01	3,414	22	19	40	1.2		
Kirkland_Main-3458	Kirkland_Manholes-2641	88.89	Kirkland_Manholes-3202	66.61	82.1	27.14	8	PVC	0.01	3,673	6	24	30	0.8		
Kirkland_Main-3459	Kirkland_Manholes-3202	66.61	Kirkland_Manholes-3203	49.55	127.5	13.38	8	PVC	0.01	2,579	6	31	36	1.4		
Kirkland_Main-3461	Kirkland_Manholes-3204	163.55	Kirkland_Manholes-2130	161.57	74.1	2.67	8	PVC	0.01	1,153	1	4	5	0.4		
Kirkland_Main-3462	Kirkland_Manholes-3205	293.32	Kirkland_Manholes-1852	284.97	245.2	3.41	8	PVC	0.01	1,301	0	4	4	0.3		
Kirkland_Main-3463	Kirkland_Manholes-3206	505.9	Kirkland_Manholes-3207	502.85	330.6	0.92	8	PVC	0.01	677	1	4	6	0.8		
Kirkland_Main-3464	Kirkland_Manholes-3207	502.85	Kirkland_Manholes-3208	497.69	398.8	1.29	8	PVC	0.01	802	3	8	11	1.4		
Kirkland_Main-3465	Kirkland_Manholes-3208	497.69	Kirkland_Manholes-3209	497.22	90.8	0.52	8	PVC	0.01	507	3	12	16	3.1		
Kirkland_Main-3466	Kirkland_Manholes-3209	497.22	Kirkland_Manholes-3210	496.11	223.1	0.5	8	PVC	0.01	497	4	16	20	4		
Kirkland_Main-3467	Kirkland_Manholes-3210	496.11	Kirkland_Manholes-1494	496.1	92	0.01	8	PVC	0.01	74	4	20	24	32.7		
Kirkland_Main-3468	Kirkland_Manholes-3212	420.94	Kirkland_Manholes-3213	419.82	168.4	0.66	8	PVC	0.01	575	0	3	3	0.6		
Kirkland_Main-3469	Kirkland_Manholes-3213	419.82	Kirkland_Manholes-3214	418.95	128.5	0.68	8	PVC	0.01	580	0	6	6	1.1		
Kirkland_Main-3470	Kirkland_Manholes-3211	420.5	Kirkland_Manholes-3214	418.95	223.1	0.69	8	PVC	0.01	588	0	3	3	0.6		
Kirkland_Main-3471	Kirkland_Manholes-3214	418.95	Kirkland_Manholes-3215	418.25	213.6	0.33	8	PVC	0.01	404	1	12	13	3.1		
Kirkland_Main-3472	Kirkland_Manholes-3215	418.25	Kirkland_Manholes-3216	416.2	334.1	0.61	8	PVC	0.01	552	1	15	16	2.8		
Kirkland_Main-3473	Kirkland_Manholes-3216	416.2	Kirkland_Manholes-3217	414.96	329.2	0.38	8	PVC	0.01	433	1	18	19	4.3		
Kirkland_Main-3474	Kirkland_Manholes-3217	414.96	Kirkland_Manholes-3218	412.9	114.1	1.81	8	PVC	0.01	947	2	21	23	2.4		
Kirkland_Main-3475	Kirkland_Manholes-3218	412.9	Kirkland_Manholes-2906	405.37	172.8	4.36	8	PVC	0.01	1,472	2	23	26	1.8		

2021 (6-year) with Proposed Improvements - Peak Hour Flow - Pipe Capacity Table

Label	Upstream Node	Upstream Invert Elevation (ft)	Downstream Node	Downstream Invert Elevation (ft)	Length (ft)	Slope (%)	Diameter (in)	Material	Manning's n	Design Capacity (gpm)	Domestic Flow (gpm)	I/I Flow (gpm)	Total Flow (gpm)	Percent Full (%)	CIP No.	Notes
Kirkland_Main-3476	Kirkland_Manholes-718	150.12	Kirkland_Manholes-3219	149.17	95.4	1	8	PVC	0.01	703	297	81	379	53.9	SM14-2035-DF5	
Kirkland_Main-3477	Kirkland_Manholes-3219	149.17	Kirkland_Manholes-3220	148.71	120.2	0.38	12	PVC	0.01	1,286	297	87	385	29.9	SM14-2021-DF2	
Kirkland_Main-3478	Kirkland_Manholes-3220	148.71	Kirkland_Manholes-719	148.45	82.3	0.32	12	PVC	0.01	1,168	297	93	390	33.4	SM14-2021-DF2	
Kirkland_Main-3479	Kirkland_Manholes-3221	407.29	Kirkland_Manholes-3222	405.15	69.7	3.07	8	PVC	0.01	1,235	1	4	5	0.4		
Kirkland_Main-3480	Kirkland_Manholes-3222	405.15	Kirkland_Manholes-1363	403.55	104.8	1.53	8	PVC	0.01	871	3	8	11	1.3		
Kirkland_Main-3481	Kirkland_Manholes-3223	405.2	Kirkland_Manholes-3224	400.94	146.9	2.9	8	PVC	0.01	1,201	1	4	5	0.4		
Kirkland_Main-3482	Kirkland_Manholes-3225	409.6	Kirkland_Manholes-3224	400.94	369	2.35	8	PVC	0.01	1,080	1	4	5	0.5		
Kirkland_Main-3483	Kirkland_Manholes-3224	400.94	Kirkland_Manholes-3226	396.71	176	2.4	8	PVC	0.01	1,093	2	12	15	1.3		
Kirkland_Main-3484	Kirkland_Manholes-3226	396.71	Kirkland_Manholes-2992	396.35	10.8	3.34	8	PVC	0.01	1,289	2	16	19	1.4		
Kirkland_Main-3485	Kirkland_Manholes-3227	308.86	Kirkland_Manholes-3228	299.55	189.6	4.91	8	PVC	0.01	1,562	1	4	5	0.3		
Kirkland_Main-3486	Kirkland_Manholes-3228	299.55	Kirkland_Manholes-3229	296.76	44.7	6.24	8	PVC	0.01	1,761	1	8	9	0.5		
Kirkland_Main-3487	Kirkland_Manholes-3229	296.76	Kirkland_Manholes-2901	294.77	63.1	3.16	8	PVC	0.01	1,252	1	12	13	1		
Kirkland_Main-3488	Kirkland_Manholes-3230	157.83	Kirkland_Manholes-3231	156.85	192.6	0.51	8	PVC	0.01	503	0	6	6	1.2		
Kirkland_Main-3489	Kirkland_Manholes-3231	156.85	Kirkland_Manholes-3232	156.12	91	0.8	8	PVC	0.01	632	8	12	20	3.2		
Kirkland_Main-3490	Kirkland_Manholes-3232	156.12	Kirkland_Manholes-716	152.58	36.4	9.73	8	PVC	0.01	2,199	8	17	26	1.2		
Kirkland_Main-3492	Kirkland_Manholes-3233	197.29	Kirkland_Manholes-1117	196.58	41.1	1.73	15	PVC	0.01	4,957	19	4	23	0.5		
Kirkland_Main-3493	Kirkland_Manholes-3235	436.7	Kirkland_Manholes-2008	435.7	179.8	0.56	8	PVC	0.01	526	3	8	11	2.1		
Kirkland_Main-3494	Kirkland_Manholes-3234	236.42	Kirkland_Manholes-1249	223.25	243.5	5.41	8	PVC	0.01	1,640	17	91	107	6.5	SM14-Ex-EX65	
Kirkland_Main-3495	Kirkland_Manholes-1247	236.99	Kirkland_Manholes-3234	236.42	76.3	0.75	8	PVC	0.01	609	15	74	89	14.6	SM14-Ex-EX65	
Kirkland_Main-3496	Kirkland_Manholes-3237	442.96	Kirkland_Manholes-3235	436.7	126.7	4.94	8	PVC	0.01	1,567	1	4	5	0.3		
Kirkland_Main-3497	Kirkland_Manholes-3242	314.11	Kirkland_Manholes-3243	305.45	217.3	3.98	8	PVC	0.01	1,407	0	4	4	0.3		
Kirkland_Main-3498	Kirkland_Manholes-3243	305.45	Kirkland_Manholes-2372	304.48	24.4	3.99	8	PVC	0.01	1,408	0	8	8	0.6		
Kirkland_Main-3499	Kirkland_Manholes-3241	300.47	Kirkland_Manholes-3240	289.24	289.6	3.88	8	PVC	0.01	1,388	2	4	6	0.4		
Kirkland_Main-3500	Kirkland_Manholes-3240	289.24	Kirkland_Manholes-3239	288.78	114.9	0.4	8	PVC	0.01	446	2	8	10	2.2		
Kirkland_Main-3501	Kirkland_Manholes-3239	288.78	Kirkland_Manholes-3238	285.43	95.5	3.51	8	PVC	0.01	1,321	2	12	14	1.1		
Kirkland_Main-3502	Kirkland_Manholes-263	292.03	Kirkland_Manholes-3238	285.43	114.2	5.78	8	PVC	0.01	1,695	33	102	135	7.9	SM14-Ex-EX252	
Kirkland_Main-3503	Kirkland_Manholes-3238	285.43	Kirkland_Manholes-2327	280.44	83.6	5.97	8	PVC	0.01	1,722	35	118	153	8.9	SM14-Ex-EX252	
Kirkland_Main-3505	Kirkland_Manholes-3236	241.89	Kirkland_Manholes-3234	236.42	154.2	3.55	8	PVC	0.01	1,328	2	8	10	0.7		
Kirkland_Main-3506	Kirkland_Manholes-2486	152.49	O-35	152.05	116.8	0.38	8	PVC	0.01	433	44	130	174	40.2	SM14-Ex-EX239	
Other_System_Main-6	MH-320	399.28	Kirkland_Manholes-3177	399.25	69.1	0.04	6	PVC	0.01	64	0	4	4	6.4		
Other_System_Main-7	MH-317	393.56	Kirkland_Manholes-3189	393.42	34.5	0.4	8	PVC	0.01	446	0	4	4	0.9		
Other_System_Main-8	MH-326	162.67	MH-323	161.73	233.9	0.4	8	PVC	0.01	446	0	4	4	0.9		
Other_System_Main-9	MH-323	161.73	Kirkland_Manholes-3166	161.38	88.4	0.4	6	PVC	0.01	207	9	8	17	8.2		
SS_Main_Selection_06-13-2016-1	MH 05-714	24.7	MH_Selection_06-13-2016-2	24.58	51.6	0.23	30	Ductile Iron	0.012	9,616	1,285	3,467	6,503	67.6	SM9	Updated per as-built drawings
SS_Main_Selection_06-13-2016-11	MH_Selection_06-13-2016-4	21.4	MH_Selection_06-13-2016-10	20.85	62.6	0.88	48	Concrete	0.013	60,432	1,610	4,085	7,446	12.3		Updated per as-built drawings
SS_Main_Selection_06-13-2016-12	MH_Selection_06-13-2016-10	20.85	MH_Selection_06-13-2016-11	20.7	78.4	0.19	48	Concrete	0.013	28,192	1,610	4,085	7,446	26.4		Updated per as-built drawings
SS_Main_Selection_06-13-2016-2	MH_Selection_06-13-2016-3	22.2	MH_Selection_06-13-2016-4	21.4	166.2	0.48	48	Concrete	0.013	44,726	1,285	3,467	6,503	14.5		Updated per as-built drawings
SS_Main_Selection_06-13-2016-3	MH_Selection_06-13-2016-2	24.22	MH_Selection_06-13-2016-6	24.16	7.3	0.82	30	Ductile Iron	0.012	18,021	1,285	3,467	6,503	36.1	SM9	Updated per as-built drawings
SS_Main_Selection_06-13-2016-4	MH_Selection_06-13-2016-6	24.16	MH_Selection_06-13-2016-7	23.6	28.1	1.99	30	Ductile Iron	0.012	28,152	1,285	3,467	6,503	23.1	SM9	Updated per as-built drawings
SS_Main_Selection_06-13-2016-5	MH_Selection_06-13-2016-7	23.5	MH_Selection_06-13-2016-8	22.81	32.8	2.11	48	Concrete	0.013	93,567	1,285	3,467	6,503	6.9		Updated per as-built drawings
SS_Main_Selection_06-13-2016-6	MH_Selection_06-13-2016-8	22.81	MH_Selection_06-13-2016-9	22.44	14.9	2.49	48	Concrete	0.013	101,749	1,285	3,467	6,503	6.4		Updated per as-built drawings
SS_Main_Selection_06-13-2016-7	MH_Selection_06-13-2016-9	22.44	MH_Selection_06-13-2016-3	22.2	69.4	0.35	48	Concrete	0.013	37,907	1,285	3,467	6,503	17.2		Updated per as-built drawings
SS_Main_Selection_06-13-2016-9	MH_Selection_06-13-2016-5	24.55	MH_Selection_06-13-2016-11	23.6	12.8	7.44	12	PVC	0.013	4,360.77	173.28	140.079	313.359	7.2		Updated per as-built drawings

2021 (6-year) with Proposed Improvements - Peak Hour Flow - Pump Table

Label	Status	Pump Definition	Pumped Flow (gpm)	Pump Head (ft)	Notes
PLAZA_PUMP	On	LAKE PLAZA-Prop 1,400gpm	1,400	48.2	
ROSEPT_PUMP	On	ROSE PT LANE	301	65.8	
SOUTHBAY_PUMP	On	SOUTH BAY	180	190.0	
TREND_PUMP	On	TREND	176	25.0	
WAVERLY_PUMP	On	WAVERLY PARK-Prop 350gpm	350	116.1	
YARROWBAYII_PUMP	On	YARROW POINT	72	45.8	

2021 (6-year) with Proposed Improvements - Peak Hour Flow - Wet Well Table

Label	Ground Elevation (ft)	Maximum Elevation (ft)	Initial Elevation (ft)	Minimum Elevation (ft)	Base Elevation (ft)	Flow In (gpm)	Flow Out (gpm)	Net Flow In (gpm)	Notes
PLAZA_WW	21.95	10	6.5	2	0	1,372	1,400	-29	
ROSEPT_WETWELL	28.91	28	12	11	10	145	301	-156	
SOUTHBAY_WETWELL	42.96	26.5	25	24	22	41	180	-139	
TREND_WETWELL	340.3	330	330	321.5	317.75	105	176	-71	
WAVERLY_WETWELL	27	10	2	1	0	326	350	-25	
YARROW POINT_WETWELL	32.18	20	8	6	6	60	72	-12	

2035 (20-year) with Proposed Improvements - Peak Hour Flow - Pipe Capacity Table

Label	Upstream Node	Upstream Invert Elevation (ft)	Downstream Node	Downstream Invert Elevation (ft)	Length (ft)	Slope (%)	Diameter (in)	Material	Manning's n	Design Capacity (gpm)	Domestic Flow (gpm)	I/I Flow (gpm)	Total Flow (gpm)	Percent Full (%)	CIP No.	Notes
Basin 3	Kirkland_Manholes-3128	323.94	Kirkland_Manholes-3129	308.71	343.2	4.44	8	PVC	0.01	1,485	3	9	12	0.8		
CO-1	Kirkland_Manholes-293	22.09	Kirkland_Manholes-310	21.69	516.5	0.08	12	PVC	0.01	578	1	18	19	3.3	SM14-Ex-EX37	
CO-2	Kirkland_Manholes-310	21.69	Kirkland_Manholes-311	21.29	254.7	0.16	12	PVC	0.01	824	4	27	31	3.7	SM14-Ex-EX37	
CO-6	Kirkland_Manholes-1496	491.57	Kirkland_Manholes-1461	483.24	408.5	2.04	8	PVC	0.01	1,007	0	4	5	0.5		
CO-8	Kirkland_Manholes-1271	222.62	Kirkland_Manholes-1272	197.83	531.9	4.66	8	PVC	0.01	1,522	1	8	9	0.6		
CO-9	Kirkland_Manholes-1272	197.83	Kirkland_Manholes-1273	182.86	225.5	6.64	8	PVC	0.01	1,817	5	17	22	1.2		
CO-11	Kirkland_Manholes-3102	53.77	Kirkland_Manholes-2664	53.2	380.4	0.15	18	PVC	0.01	2,372	212	409	621	26.2	SM14-Ex-EX222	
CO-13	Kirkland_Manholes-2664	53.2	Kirkland_Manholes-2204	53	65.8	0.3	18	PVC	0.01	3,378	213	415	628	18.6	SM14-Ex-EX222	
CO-14	Kirkland_Manholes-2204	53	Kirkland_Manholes-3101	52.44	123.2	0.45	18	PVC	0.01	4,132	220	433	653	15.8	SM14-Ex-EX222	
CO-15	Kirkland_Manholes-978	222.9	Kirkland_Manholes-979	219.9	335.8	0.89	8	PVC	0.01	666	14	54	67	10.1		
CO-17	Kirkland_Manholes-979	219.9	MH-327	219.64	97.4	0.27	8	PVC	0.01	364	14	58	72	19.9		
CO-18	MH-327	219.64	Kirkland_Manholes-980	219.4	90.3	0.27	8	PVC	0.01	364	19	67	86	23.7		
CO-19	Kirkland_Manholes-1011	226.35	MH-327	219.64	167.6	4	8	PVC	0.01	1,411	5	4	9	0.7		
CO-20	Kirkland_Manholes-1907	380.32	Kirkland_Manholes-1909	380	67.5	0.47	8	PVC	0.01	485	20	13	33	6.9		
CO-21	Kirkland_Manholes-1909	380	Kirkland_Manholes-1366	377.95	352.1	0.58	8	PVC	0.01	538	56	82	138	25.6		
CO-22	Kirkland_Manholes-638	236.51	Kirkland_Manholes-637	235.38	223.4	0.51	21	PVC	0.01	6,576	696	1,657	2,353	35.8		
CO-23	Kirkland_Manholes-637	235.38	Kirkland_Manholes-633	234.78	246.2	0.24	21	PVC	0.01	4,564	701	1,661	2,363	51.8		
CO-25	Kirkland_Manholes-2644	74.88	Kirkland_Manholes-2655	44.22	203.4	15.07	8	PVC	0.01	2,737	27	74	102	3.7		
CO-26	Kirkland_Manholes-2642	102.55	MH-328	82.65	111.2	17.89	8	PVC	0.01	2,982	4	12	16	0.5		
CO-27	MH-328	82.65	Kirkland_Manholes-2644	74.88	76.8	10.12	8	PVC	0.01	2,242	11	31	42	1.9		
CO-28	Kirkland_Manholes-3144	94.3	Kirkland_Manholes-3143	93.65	162.7	0.4	8	PVC	0.01	446	4	6	10	2.3	SM14-Ex-EX293	
CO-29	Kirkland_Manholes-3143	93.65	MH-328	82.65	108.8	10.11	8	PVC	0.01	2,242	6	12	18	0.8	SM14-Ex-EX293	
CO-30	Kirkland_Manholes-2662	11.52	Kirkland_Manholes-2661	11.28	48.5	0.49	18	PVC	0.01	4,311	372	613	985	22.9	SM14-Ex-EX289	
CO-31	Kirkland_Manholes-2661	11.28	Kirkland_Manholes-2851	10.8	93.8	0.51	18	PVC	0.01	4,385	433	793	1,226	28	SM14-Ex-EX289	
CO-32	Kirkland_Manholes-3203	49.55	Kirkland_Manholes-2660	26.87	244.8	9.27	8	PVC	0.01	2,146	14	37	51	2.4		
CO-33	Kirkland_Manholes-2660	26.87	Kirkland_Manholes-2661	11.28	44	35.46	8	PVC	0.01	4,198	60	173	233	5.6		
CO-34	Kirkland_Manholes-2221	60.29	Kirkland_Manholes-2225	40.46	244.8	8.1	8	PVC	0.01	2,007	13	52	65	3.3		
CO-35	Kirkland_Manholes-2225	40.46	Kirkland_Manholes-2228	25	165.9	9.32	8	PVC	0.01	2,152	22	72	93	4.3		Drop Connection
CO-36	Kirkland_Manholes-2081	95.66	Kirkland_Manholes-2218	82.71	188.1	6.88	8	PVC	0.01	1,850	1	7	7	0.4		
CO-37	Kirkland_Manholes-2218	82.71	Kirkland_Manholes-2221	60.29	246.5	9.1	8	PVC	0.01	2,126	9	26	35	1.6		
CO-38	Kirkland_Manholes-2227	45.3	Kirkland_Manholes-2226	43.3	93.8	2.13	8	PVC	0.01	1,029	3	7	9	0.9		
CO-39	Kirkland_Manholes-2226	43.3	Kirkland_Manholes-2225	40.46	248.3	1.14	8	PVC	0.01	754	7	13	20	2.7		
CO-41	Kirkland_Manholes-1046	162.86	Kirkland_Manholes-3175	156.47	218.7	2.92	8	PVC	0.01	1,205	151	290	441	36.6		
CO-42	Kirkland_Manholes-1043	180.32	Kirkland_Manholes-3126	177.5	189.3	1.49	8	PVC	0.01	861	42	103	144	16.8		
CO-43	Kirkland_Manholes-3126	177.5	Kirkland_Manholes-1046	162.86	197.5	7.41	8	PVC	0.01	1,920	45	116	161	8.4		
CO-44	Kirkland_Manholes-61	205.17	Kirkland_Manholes-64	204.5	110.3	0.61	8	PVC	0.01	550	11	31	42	7.7	SM14-Ex-EX6	
CO-45	Kirkland_Manholes-64	204.5	Kirkland_Manholes-65	199.61	323.5	1.51	8	PVC	0.01	867	14	36	49	5.7	SM14-Ex-EX6	
CO-47	Kirkland_Manholes-2410	409.57	Kirkland_Manholes-2408	405.44	108.3	3.82	8	PVC	0.01	1,377	1	4	5	0.4		
CO-48	Kirkland_Manholes-2135	110	Kirkland_Manholes-2156	109.44	35	1.6	8	PVC	0.01	892	10	33	42	4.7		
CO-49	Kirkland_Manholes-2156	109.44	Kirkland_Manholes-2157	100.18	171	5.42	8	PVC	0.01	1,641	10	39	49	3		
CO-50	Kirkland_Manholes-2190	132.39	Kirkland_Manholes-2189	112.21	288.2	7	8	PVC	0.01	1,866	9	25	33	1.8		
CO-51	Kirkland_Manholes-2189	112.21	Kirkland_Manholes-2186	104.5	321.1	2.4	8	PVC	0.01	1,092	15	33	48	4.4		
CO-52	Kirkland_Manholes-2169	142.85	Kirkland_Manholes-2168	127.32	219.5	7.07	8	PVC	0.01	1,875	3	17	19	1	SM14-Ex-EX193	
CO-53	Kirkland_Manholes-2168	127.32	Kirkland_Manholes-2167	120.69	65.4	10.14	8	PVC	0.01	2,245	4	25	29	1.3	SM14-Ex-EX193	
CO-54	Kirkland_Manholes-2165	94.99	Kirkland_Manholes-2164	90.37	91.4	5.05	8	PVC	0.01	1,585	13	50	62	3.9		
CO-55	Kirkland_Manholes-2164	90.37	Kirkland_Manholes-2140	88.47	43.9	4.33	8	PVC	0.01	1,468	14	58	72	4.9		
CO-56	Kirkland_Manholes-1703	58	Kirkland_Manholes-1704	54.53	111.1	3.12	8	PVC	0.01	1,246	7	17	24	1.9	SM14-Ex-EX153	
CO-57	Kirkland_Manholes-1704	54.53	Kirkland_Manholes-1705	33.28	211.8	10.03	8	PVC	0.01	2,233	8	25	32	1.5	SM14-Ex-EX153	
CO-58	Kirkland_Manholes-1810	85.96	Kirkland_Manholes-1808	66.8	280.2	6.84	8	PVC	0.01	1,844	97	287	384	20.8	SM4	
CO-59	Kirkland_Manholes-1808	66.8	Kirkland_Manholes-1807	44.26	183.9	12.26	8	PVC	0.01	2,469	98	295	394	16	SM4	
CO-60	Kirkland_Manholes-1718	72.96	Kirkland_Manholes-1717	58.55	301.8	4.77	8	PVC	0.01	1,541	2	8	10	0.7	SM14-Ex-EX165	
CO-61	Kirkland_Manholes-1717	58.55	Kirkland_Manholes-1719	46.02	243.6	5.14	8	PVC	0.01	1,599	33	50	83	5.2	SM14-Ex-EX165	
CO-62	Kirkland_Manholes-1605	146.86	Kirkland_Manholes-1606	138.24	64.3	13.41	8	PVC	0.01	2,582	1	8	9	0.3	SM14-Ex-EX120	
CO-63	Kirkland_Manholes-1606	138.24	Kirkland_Manholes-1604	117.22	209.3	10.04	8	PVC	0.01	2,234	1	17	18	0.8	SM14-Ex-EX120	
CO-64	Kirkland_Manholes-3029	503.06	Kirkland_Manholes-1462	498.98	186.9	2.18	8	PVC	0.01	1,042	2	4	6	0.6	SM14-Ex-EX273	
CO-66	Kirkland_Manholes-1468	502.5	Kirkland_Manholes-1462	498.98	381.4	0.92	8	PVC	0.01	677	3	4	7	1	SM14-Ex-EX271	
CO-67	Kirkland_Manholes-1462	498.98	Kirkland_Manholes-1463	498.43	46.4	1.18	8	PVC	0.01	767	6	13	19	2.5	SM14-Ex-EX271	
CO-69	Kirkland_Manholes-1251	198.9	Kirkland_Manholes-1252	181.71	334.6	5.14	8	PVC	0.01	1,598	45	157	202	12.6	SM14-Ex-EX101	
CO-70	Kirkland_Manholes-1250	210.15	Kirkland_Manholes-1251	198.9	400	2.81	8	PVC	0.01	1,182	36	140	176	14.9	SM14-Ex-EX101	
CO-71	Kirkland_Manholes-1310	231.57	Kirkland_Manholes-1251	198.9	267.1	12.23	8	PVC	0.01	2,466	4	8	12	0.5	SM14-Ex-EX99	
CO-72	Kirkland_Manholes-230	172.81	Kirkland_Manholes-228	142.32	167.5	18.2	8	PVC	0.01	3,008	57	125	182	6.1		
CO-73	Kirkland_Manholes-3115	187.58	Kirkland_Manholes-228	142.32	414	10.93	8	PVC	0.01	2,331	3	4	7	0.3		

2035 (20-year) with Proposed Improvements - Peak Hour Flow - Pipe Capacity Table

Label	Upstream Node	Upstream Invert Elevation (ft)	Downstream Node	Downstream Invert Elevation (ft)	Length (ft)	Slope (%)	Diameter (in)	Material	Manning's n	Design Capacity (gpm)	Domestic Flow (gpm)	I/I Flow (gpm)	Total Flow (gpm)	Percent Full (%)	CIP No.	Notes
CO-74	Kirkland_Manholes-1287	140.18	Kirkland_Manholes-1288	139.29	58.2	1.53	8	PVC	0.01	872	46	165	211	24.2	SM14-Ex-EX105	
CO-75	Kirkland_Manholes-1288	139.29	Kirkland_Manholes-1289	131.61	344.5	2.23	8	PVC	0.01	1,053	51	173	224	21.3	SM14-Ex-EX105	
CO-77	Kirkland_Manholes-1255	163.1	Kirkland_Manholes-1256	151.53	106.9	10.82	8	PVC	0.01	2,319	7	33	40	1.7	SM14-Ex-EX104	
CO-78	Kirkland_Manholes-1253	189.17	MH-329	183.73	57.5	9.46	8	PVC	0.01	2,169	2	8	10	0.5	SM14-Ex-EX104	
CO-80	Kirkland_Manholes-1254	186	MH-329	183.73	30.2	7.52	8	PVC	0.01	1,934	3	8	11	0.6	SM14-Ex-EX104	
CO-81	MH-329	183.73	Kirkland_Manholes-1255	163.1	274.1	7.53	8	PVC	0.01	1,934	5	25	30	1.5	SM14-Ex-EX104	
CO-83	Kirkland_Manholes-279	76.14	Kirkland_Manholes-278	56.62	239.7	8.14	8	PVC	0.01	2,012	33	6	39	1.9	SM10	
CO-84	Kirkland_Manholes-271	91.78	Kirkland_Manholes-272	84	313.5	2.48	8	PVC	0.01	1,111	64	136	200	18	SM10	If flow exceeds capacity, overflow MH will be activated; model appropriately.
CO-85	Kirkland_Manholes-272	84	Kirkland_Manholes-273	69.52	161.1	8.99	8	PVC	0.01	2,114	67	140	207	9.8	SM10	
CO-89	Kirkland_Manholes-1221	265	Kirkland_Manholes-1210	257.02	313.6	2.54	8	PVC	0.01	1,125	6	15	21	1.8	SM14-Ex-EX90	
CO-90	Kirkland_Manholes-1208	237.71	Kirkland_Manholes-1207	214.35	271	8.62	8	PVC	0.01	2,070	16	39	56	2.7	SM14-Ex-EX90	
CO-91	Kirkland_Manholes-1207	214.35	Kirkland_Manholes-1206	193.92	362.6	5.63	8	PVC	0.01	1,673	20	48	68	4.1	SM14-Ex-EX90	
CO-92	Kirkland_Manholes-1142	218.06	Kirkland_Manholes-1146	215.3	316.4	0.87	8	PVC	0.01	659	12	33	45	6.9	SM4	
CO-93	Kirkland_Manholes-1223	241.1	Kirkland_Manholes-1146	215.3	349.8	7.38	8	PVC	0.01	1,915	4	8	12	0.6	SM14-Ex-EX86	
CO-94	Kirkland_Manholes-1199	190.02	Kirkland_Manholes-1198	189.72	153.8	0.19	8	PVC	0.01	311	13	8	21	6.7	SM14-Ex-EX80	
CO-95	Kirkland_Manholes-1141	204.1	Kirkland_Manholes-1198	189.72	107.3	13.4	8	PVC	0.01	2,581	8	33	41	1.6	SM14-Ex-EX80	
CO-96	Kirkland_Manholes-3104	114.41	Kirkland_Manholes-3103	113.84	31.2	1.83	8	PVC	0.01	953	26	107	133	14	SM10	
CO-97	Kirkland_Manholes-517	138.64	Kirkland_Manholes-3103	113.84	358.5	6.92	8	PVC	0.01	1,854	2	8	10	0.5	SM10	
CO-98	Kirkland_Manholes-3196	122.5	Kirkland_Manholes-503	118	198.4	2.27	8	PVC	0.01	1,062	5	17	21	2	SM10	
CO-100	Kirkland_Manholes-503	118	Kirkland_Manholes-504	108.24	276.3	3.53	8	PVC	0.01	1,325	6	25	31	2.3	SM14-Ex-EX78	
CO-101	Kirkland_Manholes-504	108.24	Kirkland_Manholes-510	78.8	269.3	10.93	8	PVC	0.01	2,331	8	33	41	1.8	SM14-Ex-EX78	
CO-102	Kirkland_Manholes-2573	298.95	Kirkland_Manholes-2572	298.88	17.9	0.4	8	PVC	0.01	446	4	17	21	4.7		
CO-103	Kirkland_Manholes-2959	355.76	Kirkland_Manholes-2572	298.88	327.6	17.36	8	PVC	0.01	2,938	2	4	6	0.2		
CO-104	Kirkland_Manholes-2783	269.77	Kirkland_Manholes-2784	262.56	166.7	4.32	8	PVC	0.01	1,466	10	43	53	3.6		
CO-105	Kirkland_Manholes-2578	278.46	Kirkland_Manholes-2783	269.77	170.6	5.09	8	PVC	0.01	1,591	9	39	48	3		
CO-106	Kirkland_Manholes-2921	73.76	Kirkland_Manholes-2920	63.77	70.3	14.2	8	PVC	0.01	2,657	7	18	24	0.9		
CO-107	Kirkland_Manholes-2920	63.77	Kirkland_Manholes-177	35.5	126.7	22.31	8		0.012	2,775	8	22	30	1.1		
CO-109	Kirkland_Manholes-2881	265.95	Kirkland_Manholes-1221	265	237.1	0.4	8	PVC	0.01	446	3	6	9	2	SM14-Ex-EX90	
CO-110	Kirkland_Manholes-2686	221.84	Kirkland_Manholes-2690	217.58	240.3	1.77	8	PVC	0.01	939	14	34	49	5.2	SM14-Ex-EX201	
CO-111	Kirkland_Manholes-2690	217.58	Kirkland_Manholes-2691	211.09	233.1	2.78	8	PVC	0.01	1,176	16	39	54	4.6	SM14-Ex-EX201	
CO-112	Kirkland_Manholes-2612	250.12	Kirkland_Manholes-2613	203.91	357.8	12.91	8	PVC	0.01	2,534	5	9	13	0.5	SM14-Ex-EX297	
CO-113	Kirkland_Manholes-2613	203.91	Kirkland_Manholes-3164	171.21	256.4	12.76	8	PVC	0.01	2,518	8	13	21	0.8	SM14-Ex-EX297	
CO-114	Kirkland_Manholes-488	256.69	Kirkland_Manholes-489	206.41	218.5	23.01	8	PVC	0.01	3,382	2	4	6	0.2		
CO-115	Kirkland_Manholes-834	245.56	Kirkland_Manholes-489	206.41	278.5	14.06	8	PVC	0.01	2,644	2	4	7	0.2		
CO-116	Kirkland_Manholes-599	92.8	Kirkland_Manholes-600	91.95	330.6	0.26	8	PVC	0.01	357	16	17	33	9.2	SM14-Ex-EX160	
CO-120	Kirkland_Manholes-601	92.05	Kirkland_Manholes-602	90.22	280.5	0.65	8	PVC	0.01	569	13	17	29	5.2	SM14-Ex-EX160	
CO-123	Kirkland_Manholes-603	94.89	Kirkland_Manholes-604	92.41	322.7	0.77	8	PVC	0.01	618	3	4	7	1.1	SM14-Ex-EX160	
CO-124	Kirkland_Manholes-594	105.16	Kirkland_Manholes-595	103.44	177	0.97	12	PVC	0.01	2,049	2	8	10	0.5	SM14-Ex-EX116	
CO-125	MH-321	218.02	MH-322	217.7	80.6	0.4	8	PVC	0.01	446	2	4	6	1.4		
CO-126	MH-322	217.7	Kirkland_Manholes-2446	217.36	85	0.4	8	PVC	0.01	446	3	9	12	2.6		
CO-127	MH-315	235.18	MH-316	235.06	29.4	0.41	6	Concrete	0.013	161	1	4	5	3.4		
CO-128	MH-316	235.06	Kirkland_Manholes-2602	234.19	216.7	0.4	8	PVC	0.01	446	2	9	11	2.4	SM14-Ex-EX300	
CO-130	MH-330	93.13	Kirkland_Manholes-601	92.05	270.2	0.4	8	PVC	0.01	446	1	8	9	2.1	SM14-Ex-EX160	
CO-133	Kirkland_Manholes-2269	398.2	Kirkland_Manholes-2266	392.8	346.8	1.56	8	PVC	0.01	880	31	112	143	16.3	SM14-Ex-EX261	
CO-139	Kirkland_Manholes-2703	250.19	MH-333	250.73	32.9	1.64	8	PVC	0.01	904	4	13	17	1.9		
CO-140	MH-333	250.73	MH-334	252.1	150.3	0.91	8	PVC	0.01	673	3	9	11	1.7		
CO-141	MH-334	252.1	MH-335	253.55	221.6	0.65	8	PVC	0.01	570	1	4	5	1		
CO-142	Kirkland_Manholes-2881	265.95	Kirkland_Manholes-1214	261.31	224.5	2.07	8	PVC	0.01	1,013	3	6	9	0.9	SM14-Ex-EX90	
CO-143	Kirkland_Manholes-2593	284.96	Kirkland_Manholes-2604	283.17	324.7	0.55	8	PVC	0.01	524	35	99	0	0	SM14-Ex-EX299	
CO-148	Kirkland_Manholes-603	94.89	Kirkland_Manholes-602	90.22	228.3	2.05	8	PVC	0.01	1,008	3	4	7	0.7	SM14-Ex-EX160	
CO-149	MH-336	98.65	Kirkland_Manholes-276	92.16	227.3	2.86	8	PVC	0.01	1,191	0	3	4	0.3	SM10	
CO-150	MH-337	92.45	Kirkland_Manholes-279	76.14	213.9	7.63	8	PVC	0.01	1,947	0	3	4	0.2	SM10	
CO-151	MH-338	119.57	Kirkland_Manholes-308	114.39	316.2	1.64	8	PVC	0.01	902	0	9	9	1	SM10	
CO-152	MH-339	159.67	Kirkland_Manholes-524	157.52	274.1	0.78	8	PVC	0.01	624	0	8	9	1.4	SM10	
CO-154	MH_Selection_06-13-2016-11	20.6	O-26	20.25	45	0.78	48	Concrete	0.013	56,862	2,122	4,233	8,107	14.3		Updated per as-built drawings
KC_Main-2	KC_Manholes-18	10.29	KC_Manholes-19	10.24	10.1	0.5	24	PVC	0.01	9,299	1,028	2,069	3,169	34.1	SM14-Ex-EX289	
KC_Main-28	KC_Manholes-19	10.24	O-6	10	47.9	0.5	24	PVC	0.01	9,344	1,084	2,075	3,231	34.6	SM14-Ex-EX289	
Kirkland_Main-1	Kirkland_Manholes-2	142.59	Kirkland_Manholes-3	141.09	316.3	0.47	8	PVC	0.01	486	0	1	2	0.3		
Kirkland_Main-2	Kirkland_Manholes-4	139.47	Kirkland_Manholes-5	138.65	146.8	0.56	8	PVC	0.01	527	16	4	21	3.9		
Kirkland_Main-3	Kirkland_Manholes-3	141.09	Kirkland_Manholes-4	139.47	325.9	0.5	8	PVC	0.01	497	16	3	19	3.8		
Kirkland_Main-4	Kirkland_Manholes-6	127.8	Kirkland_Manholes-7	127.07	145	0.5	8	PVC	0.01	500	17	7	25	4.9		

2035 (20-year) with Proposed Improvements - Peak Hour Flow - Pipe Capacity Table

Label	Upstream Node	Upstream Invert Elevation (ft)	Downstream Node	Downstream Invert Elevation (ft)	Length (ft)	Slope (%)	Diameter (in)	Material	Manning's n	Design Capacity (gpm)	Domestic Flow (gpm)	I/I Flow (gpm)	Total Flow (gpm)	Percent Full (%)	CIP No.	Notes
Kirkland_Main-5	Kirkland_Manholes-5	138.65	Kirkland_Manholes-6	127.8	166.2	6.53	8	PVC	0.01	1,801	17	6	23	1.3		
Kirkland_Main-6	Kirkland_Manholes-8	108.29	Kirkland_Manholes-9	99.39	204.3	4.36	8	PVC	0.01	1,471	19	12	31	2.1		
Kirkland_Main-7	Kirkland_Manholes-7	127.07	Kirkland_Manholes-8	108.29	154	12.2	8	PVC	0.01	2,462	19	10	29	1.2		
Kirkland_Main-8	Kirkland_Manholes-9	99.39	Kirkland_Manholes-99	74.09	252.3	10.03	8	PVC	0.01	2,233	66	13	79	3.5		
Kirkland_Main-10	Kirkland_Manholes-10	249.23	Kirkland_Manholes-11	247.5	365.2	0.47	8	PVC	0.01	485	2	4	6	1.2		
Kirkland_Main-11	Kirkland_Manholes-11	247.5	Kirkland_Manholes-12	246.57	355.7	0.26	8	PVC	0.01	360	4	9	13	3.6		
Kirkland_Main-12	Kirkland_Manholes-12	246.57	Kirkland_Manholes-650	246.28	73.5	0.4	8	PVC	0.01	446	8	13	21	4.7		
Kirkland_Main-13	Kirkland_Manholes-13	266.08	Kirkland_Manholes-917	265.16	206.5	0.45	8	PVC	0.01	471	1	4	5	1		
Kirkland_Main-14	Kirkland_Manholes-14	260.99	Kirkland_Manholes-15	248.41	274.7	4.58	8	PVC	0.01	1,509	1	4	6	0.4		
Kirkland_Main-15	Kirkland_Manholes-16	249.63	Kirkland_Manholes-15	248.41	56	2.18	8	PVC	0.01	1,041	24	82	106	10.2		
Kirkland_Main-16	Kirkland_Manholes-17	247.29	Kirkland_Manholes-650	246.28	284.1	0.36	8	PVC	0.01	420	29	94	124	29.4		
Kirkland_Main-17	Kirkland_Manholes-3034	97.65	Kirkland_Manholes-3033	93.75	20	19.51	8	PVC	0.01	3,114	1	4	5	0.2		
Kirkland_Main-18	Kirkland_Manholes-3033	93.75	Kirkland_Manholes-3032	86.58	55.1	13.01	8	PVC	0.01	2,543	1	9	10	0.4		
Kirkland_Main-19	Kirkland_Manholes-3032	86.58	Kirkland_Manholes-22	82.71	39.7	9.76	8	PVC	0.01	2,202	1	13	15	0.7		
Kirkland_Main-20	Kirkland_Manholes-22	82.71	Kirkland_Manholes-1	73.25	125.9	7.51	8	PVC	0.01	1,932	2	18	20	1		
Kirkland_Main-21	Kirkland_Manholes-15	248.41	Kirkland_Manholes-17	247.29	382.5	0.29	8	PVC	0.01	382	26	90	116	30.5		
Kirkland_Main-22	Kirkland_Manholes-18	254.35	Kirkland_Manholes-16	249.63	106.2	4.45	8	PVC	0.01	1,487	23	77	100	6.7		
Kirkland_Main-23	Kirkland_Manholes-19	254.88	Kirkland_Manholes-18	254.35	102.4	0.52	8	PVC	0.01	507	21	73	94	18.6		
Kirkland_Main-24	Kirkland_Manholes-23	269.98	Kirkland_Manholes-19	254.88	324.5	4.65	8	PVC	0.01	1,521	2	4	6	0.4		
Kirkland_Main-25	Kirkland_Manholes-622	255	Kirkland_Manholes-19	254.88	84.5	0.14	8	PVC	0.01	266	19	64	83	31.3		
Kirkland_Main-26	Kirkland_Manholes-624	257.73	Kirkland_Manholes-623	256.4	95.1	1.4	8	PVC	0.01	834	1	4	6	0.7		
Kirkland_Main-27	Kirkland_Manholes-623	256.4	Kirkland_Manholes-622	255	306.3	0.46	8	PVC	0.01	477	3	9	12	2.4		
Kirkland_Main-28	Kirkland_Manholes-625	258	Kirkland_Manholes-622	255	179.1	1.67	8	PVC	0.01	912	15	52	66	7.3		
Kirkland_Main-29	Kirkland_Manholes-28	182.96	Kirkland_Manholes-29	182.79	41.4	0.4	8	PVC	0.01	446	4	4	9	2		
Kirkland_Main-30	Kirkland_Manholes-29	182.79	Kirkland_Manholes-25	175.02	121.6	6.39	8	PVC	0.01	1,783	25	45	69	3.9		
Kirkland_Main-31	Kirkland_Manholes-36	251.25	Kirkland_Manholes-35	222.04	280.7	10.41	8	PVC	0.01	2,275	5	4	9	0.4		
Kirkland_Main-32	Kirkland_Manholes-35	222.04	Kirkland_Manholes-34	221.71	82.5	0.4	8	PVC	0.01	446	7	9	16	3.6		
Kirkland_Main-33	Kirkland_Manholes-34	221.71	Kirkland_Manholes-32	220.36	300.4	0.45	8	PVC	0.01	473	9	13	23	4.8		
Kirkland_Main-34	Kirkland_Manholes-32	220.36	Kirkland_Manholes-33	219.84	21.3	2.44	8	PVC	0.01	1,102	11	18	29	2.6		
Kirkland_Main-35	Kirkland_Manholes-33	219.84	Kirkland_Manholes-31	218.88	40.1	2.39	8	PVC	0.01	1,091	12	22	34	3.1		
Kirkland_Main-36	Kirkland_Manholes-37	238.46	Kirkland_Manholes-31	218.88	419.9	4.66	8	PVC	0.01	1,523	3	4	7	0.5		
Kirkland_Main-37	Kirkland_Manholes-31	218.88	Kirkland_Manholes-30	193.77	330.5	7.6	8	PVC	0.01	1,943	16	31	47	2.4		
Kirkland_Main-38	Kirkland_Manholes-30	193.77	Kirkland_Manholes-29	182.79	147.1	7.46	8	PVC	0.01	1,926	19	36	55	2.8		
Kirkland_Main-39	Kirkland_Manholes-40	185.88	Kirkland_Manholes-41	184.86	116.1	0.88	8	PVC	0.01	661	1	9	10	1.5		
Kirkland_Main-40	Kirkland_Manholes-41	184.86	Kirkland_Manholes-38	173.18	108.4	10.78	8	PVC	0.01	2,314	2	13	16	0.7		
Kirkland_Main-41	Kirkland_Manholes-39	193.85	Kirkland_Manholes-40	185.88	407	1.96	8	PVC	0.01	987	0	4	5	0.5		
Kirkland_Main-42	Kirkland_Manholes-54	66.84	Kirkland_Manholes-103	59.75	133.4	5.31	8	PVC	0.01	1,625	56	161	216	13.3	SM14-Ex-EX13	
Kirkland_Main-43	Kirkland_Manholes-47	192.83	Kirkland_Manholes-48	169.78	343.8	6.71	8	PVC	0.01	1,826	2	4	6	0.4	SM14-Ex-EX13	
Kirkland_Main-44	Kirkland_Manholes-48	169.78	Kirkland_Manholes-49	164.6	338.4	1.53	8	PVC	0.01	872	4	9	13	1.5	SM14-Ex-EX13	
Kirkland_Main-45	Kirkland_Manholes-49	164.6	Kirkland_Manholes-50	161.4	179.7	1.78	8	PVC	0.01	941	37	116	153	16.3	SM14-Ex-EX13	
Kirkland_Main-46	Kirkland_Manholes-50	161.4	Kirkland_Manholes-51	157.39	303.6	1.32	8	PVC	0.01	810	39	120	159	19.6	SM14-Ex-EX13	
Kirkland_Main-47	Kirkland_Manholes-51	157.39	Kirkland_Manholes-52	124.84	333.7	9.75	8	PVC	0.01	2,202	41	125	166	7.5	SM14-Ex-EX13	
Kirkland_Main-48	Kirkland_Manholes-59	155.25	Kirkland_Manholes-58	153.05	131	1.68	8	PVC	0.01	914	2	4	6	0.7	SM14-Ex-EX14	
Kirkland_Main-49	Kirkland_Manholes-58	153.05	Kirkland_Manholes-57	140.82	263.2	4.65	8	PVC	0.01	1,520	3	9	12	0.8	SM14-Ex-EX14	
Kirkland_Main-50	Kirkland_Manholes-57	140.82	Kirkland_Manholes-56	112.82	272.1	10.29	8	PVC	0.01	2,262	6	13	20	0.9	SM14-Ex-EX14	
Kirkland_Main-51	Kirkland_Manholes-56	112.82	Kirkland_Manholes-55	79.92	269.4	12.21	8	PVC	0.01	2,464	9	18	27	1.1	SM14-Ex-EX14	
Kirkland_Main-52	Kirkland_Manholes-55	79.92	Kirkland_Manholes-54	66.84	152.2	8.59	8	PVC	0.01	2,067	11	22	33	1.6	SM14-Ex-EX14	
Kirkland_Main-53	Kirkland_Manholes-52	124.84	Kirkland_Manholes-53	83.26	336	12.38	8	PVC	0.01	2,480	43	129	173	7	SM14-Ex-EX13	
Kirkland_Main-54	Kirkland_Manholes-53	83.26	Kirkland_Manholes-54	66.84	148.1	11.08	8	PVC	0.01	2,347	44	134	178	7.6	SM14-Ex-EX13	
Kirkland_Main-55	Kirkland_Manholes-62	222.28	Kirkland_Manholes-63	216.98	205.6	2.58	8	PVC	0.01	1,132	2	4	7	0.6		
Kirkland_Main-56	Kirkland_Manholes-63	216.98	Kirkland_Manholes-60	215.88	80.7	1.36	8	PVC	0.01	823	3	9	12	1.4		
Kirkland_Main-57	Kirkland_Manholes-60	215.88	Kirkland_Manholes-61	215.72	40.6	0.4	8	PVC	0.01	446	4	13	17	3.9		Drop Connection
Kirkland_Main-58	Kirkland_Manholes-65	199.61	Kirkland_Manholes-66	186.65	326.2	3.97	8	PVC	0.01	1,405	15	40	56	4	SM14-Ex-EX6	
Kirkland_Main-59	Kirkland_Manholes-66	186.65	Kirkland_Manholes-67	185.01	47	3.49	8	PVC	0.01	1,317	51	107	158	12	SM14-Ex-EX17	
Kirkland_Main-61	Kirkland_Manholes-72	160.29	Kirkland_Manholes-70	152.59	265.8	2.9	8	PVC	0.01	1,200	2	4	7	0.6	SM14-Ex-EX15	
Kirkland_Main-62	Kirkland_Manholes-985	205.92	Kirkland_Manholes-986	204.38	192.7	0.8	8	PVC	0.01	630	54	143	197	31.3	SM14-Ex-EX3	
Kirkland_Main-63	Kirkland_Manholes-242	21.02	Kirkland_Manholes-2761	12.79	68	12.1	8	PVC	0.01	2,453	95	277	372	15.2		
Kirkland_Main-64	Kirkland_Manholes-1033	173.21	Kirkland_Manholes-450	130.07	239	18.05	8	PVC	0.01	2,996	8	13	21	0.7		
Kirkland_Main-65	Kirkland_Manholes-71	153	Kirkland_Manholes-70	152.59	153.6	0.27	8	PVC	0.01	364	2	4	6	1.7	SM14-Ex-EX16	
Kirkland_Main-66	Kirkland_Manholes-69	159.19	Kirkland_Manholes-70	152.59	340.9	1.94	8	PVC	0.01	981	5	9	14	1.4	SM14-Ex-EX16	
Kirkland_Main-67	Kirkland_Manholes-68	178.61	Kirkland_Manholes-69	159.19	346.1	5.61	8	PVC	0.01	1,670	2	4	7	0.4	SM14-Ex-EX16	
Kirkland_Main-68	Kirkland_Manholes-73	249.05	Kirkland_Manholes-74	244.74	143	3.01	8	PVC	0.01	1,224	1	4	5	0.4		

2035 (20-year) with Proposed Improvements - Peak Hour Flow - Pipe Capacity Table

Label	Upstream Node	Upstream Invert Elevation (ft)	Downstream Node	Downstream Invert Elevation (ft)	Length (ft)	Slope (%)	Diameter (in)	Material	Manning's n	Design Capacity (gpm)	Domestic Flow (gpm)	I/I Flow (gpm)	Total Flow (gpm)	Percent Full (%)	CIP No.	Notes
Kirkland_Main-69	Kirkland_Manholes-77	217.04	Kirkland_Manholes-78	207.46	342.9	2.79	8	PVC	0.01	1,178	11	22	34	2.9	SM14-Ex-EX7	
Kirkland_Main-70	Kirkland_Manholes-76	225.56	Kirkland_Manholes-77	217.04	294.1	2.9	8	PVC	0.01	1,200	7	18	25	2.1	SM14-Ex-EX7	
Kirkland_Main-71	Kirkland_Manholes-75	235.08	Kirkland_Manholes-76	225.56	281.9	3.38	8	PVC	0.01	1,296	4	13	18	1.4	SM14-Ex-EX7	
Kirkland_Main-72	Kirkland_Manholes-74	244.74	Kirkland_Manholes-75	235.08	281.2	3.44	8	PVC	0.01	1,307	3	9	12	0.9	SM14-Ex-EX7	
Kirkland_Main-75	Kirkland_Manholes-79	197.48	Kirkland_Manholes-66	186.65	235.2	4.6	8	PVC	0.01	1,513	33	62	95	6.3	SM14-Ex-EX17	
Kirkland_Main-76	Kirkland_Manholes-78	207.46	Kirkland_Manholes-79	197.48	229.3	4.35	8	PVC	0.01	1,471	31	58	89	6	SM14-Ex-EX17	
Kirkland_Main-78	Kirkland_Manholes-46	167.44	Kirkland_Manholes-43	166.66	144	0.54	8	PVC	0.01	519	1	9	10	1.9	SM14-Ex-EX5	
Kirkland_Main-79	Kirkland_Manholes-43	166.66	Kirkland_Manholes-44	166.02	96.1	0.67	8	PVC	0.01	575	31	94	125	21.6	SM14-Ex-EX5	
Kirkland_Main-80	Kirkland_Manholes-45	166.8	Kirkland_Manholes-44	166.02	115.5	0.68	8	PVC	0.01	579	0	4	5	0.8	SM14-Ex-EX5	
Kirkland_Main-81	Kirkland_Manholes-27	172.24	Kirkland_Manholes-26	167.35	165.4	2.96	8	PVC	0.01	1,212	4	22	26	2.1	SM14-Ex-EX5	
Kirkland_Main-82	Kirkland_Manholes-26	167.35	Kirkland_Manholes-43	166.66	133.3	0.52	8	PVC	0.01	507	30	80	110	21.7	SM14-Ex-EX5	
Kirkland_Main-84	Kirkland_Manholes-38	173.18	Kirkland_Manholes-27	172.24	235.8	0.4	8	PVC	0.01	446	3	18	21	4.8	SM14-Ex-EX5	
Kirkland_Main-85	Kirkland_Manholes-24	172.7	Kirkland_Manholes-26	167.35	274.1	1.95	8	PVC	0.01	985	25	54	79	8	SM14-Ex-EX5	
Kirkland_Main-86	Kirkland_Manholes-42	173.4	Kirkland_Manholes-46	167.44	195.7	3.04	8	PVC	0.01	1,230	1	4	5	0.4	SM14-Ex-EX5	
Kirkland_Main-87	Kirkland_Manholes-25	175.02	Kirkland_Manholes-24	172.7	94.4	2.46	8	PVC	0.01	1,105	25	49	74	6.7	SM14-Ex-EX5	
Kirkland_Main-88	Kirkland_Manholes-44	166.02	Kirkland_Manholes-49	164.6	321.6	0.44	8	PVC	0.01	469	31	103	134	28.6	SM14-Ex-EX5	
Kirkland_Main-90	Kirkland_Manholes-81	88.9	Kirkland_Manholes-143	71.16	340.9	5.2	8	PVC	0.01	1,608	2	4	7	0.4		
Kirkland_Main-91	Kirkland_Manholes-70	152.59	Kirkland_Manholes-82	150.35	263.6	0.85	8	PVC	0.01	650	10	22	33	5	SM14-Ex-EX15	
Kirkland_Main-92	Kirkland_Manholes-85	147.38	Kirkland_Manholes-84	141.87	73.4	7.51	8	PVC	0.01	1,932	4	9	13	0.7	SM14-Ex-EX24	
Kirkland_Main-93	Kirkland_Manholes-83	157.35	Kirkland_Manholes-85	147.38	229.6	4.34	8	PVC	0.01	1,469	2	4	6	0.4	SM14-Ex-EX24	
Kirkland_Main-95	Kirkland_Manholes-82	150.35	Kirkland_Manholes-86	148.26	180.8	1.16	8	PVC	0.01	758	12	27	39	5.1	SM14-Ex-EX15	
Kirkland_Main-96	Kirkland_Manholes-87	163.95	Kirkland_Manholes-147	139.14	319.7	7.76	8	PVC	0.01	1,964	54	116	170	8.7	SM14-Ex-EX25	
Kirkland_Main-97	Kirkland_Manholes-67	185.01	Kirkland_Manholes-87	163.95	332	6.34	8	PVC	0.01	1,776	52	112	163	9.2	SM14-Ex-EX25	
Kirkland_Main-98	Kirkland_Manholes-88	192.85	Kirkland_Manholes-89	177.59	273.6	5.58	8	PVC	0.01	1,665	2	4	7	0.4	SM14-Ex-EX26	
Kirkland_Main-99	Kirkland_Manholes-90	174.66	Kirkland_Manholes-91	170.09	87.7	5.21	8	PVC	0.01	1,609	1	4	6	0.4	SM14-Ex-EX27	
Kirkland_Main-100	Kirkland_Manholes-92	172.99	Kirkland_Manholes-91	170.09	82	3.53	8	PVC	0.01	1,325	1	4	6	0.4	SM14-Ex-EX27	
Kirkland_Main-101	Kirkland_Manholes-91	170.09	Kirkland_Manholes-152	157.79	45.8	26.87	8	PVC	0.01	3,654	4	13	17	0.5	SM14-Ex-EX27	Slope verified in as-builts
Kirkland_Main-103	Kirkland_Manholes-98	253.76	Kirkland_Manholes-97	241.6	353.8	3.44	8	PVC	0.01	1,307	3	4	8	0.6	SM14-Ex-EX8	
Kirkland_Main-104	Kirkland_Manholes-2944	250.07	Kirkland_Manholes-2943	249.65	93.4	0.45	8	PVC	0.01	473	0	4	5	1		
Kirkland_Main-105	Kirkland_Manholes-97	241.6	Kirkland_Manholes-95	228.66	356.1	3.63	8	PVC	0.01	1,344	7	9	15	1.2	SM14-Ex-EX8	
Kirkland_Main-106	Kirkland_Manholes-95	228.66	Kirkland_Manholes-96	228	106.1	0.62	8	PVC	0.01	556	9	13	23	4.1	SM14-Ex-EX8	
Kirkland_Main-107	Kirkland_Manholes-96	228	Kirkland_Manholes-93	223.12	245.5	1.99	8	PVC	0.01	994	11	18	28	2.9	SM14-Ex-EX8	
Kirkland_Main-108	Kirkland_Manholes-93	223.12	Kirkland_Manholes-94	210.17	176.3	7.35	8	PVC	0.01	1,911	13	22	35	1.8	SM14-Ex-EX8	
Kirkland_Main-109	Kirkland_Manholes-94	210.17	Kirkland_Manholes-78	207.46	295.3	0.92	8	PVC	0.01	675	17	31	48	7.1	SM14-Ex-EX17	
Kirkland_Main-110	Kirkland_Manholes-1024	212.11	Kirkland_Manholes-94	210.17	143.5	1.35	8	PVC	0.01	820	2	4	6	0.8	SM14-Ex-EX17	
Kirkland_Main-111	Kirkland_Manholes-106	44.49	Kirkland_Manholes-242	21.02	301.2	7.79	8	PVC	0.01	1,968	72	219	291	14.8	SM14-Ex-EX12	
Kirkland_Main-112	Kirkland_Manholes-105	48.51	Kirkland_Manholes-106	44.49	358.2	1.12	8	PVC	0.01	747	70	214	284	38	SM14-Ex-EX12	
Kirkland_Main-113	Kirkland_Manholes-103	59.75	Kirkland_Manholes-105	48.51	350.5	3.21	8	PVC	0.01	1,263	68	210	278	22	SM14-Ex-EX12	
Kirkland_Main-114	Kirkland_Manholes-104	60.14	Kirkland_Manholes-103	59.75	61	0.64	8	PVC	0.01	564	12	45	57	10.1		
Kirkland_Main-115	Kirkland_Manholes-102	61.04	Kirkland_Manholes-104	60.14	158.9	0.57	8	PVC	0.01	531	11	40	51	9.7		
Kirkland_Main-116	Kirkland_Manholes-101	61.95	Kirkland_Manholes-102	61.04	98.7	0.92	8	PVC	0.01	676	11	36	46	6.8		
Kirkland_Main-117	Kirkland_Manholes-99	74.09	O-41	72.48	38.5	4.19	8	PVC	0.01	1,443	74	15	89	6.2		
Kirkland_Main-119	Kirkland_Manholes-107	262.65	Kirkland_Manholes-2737	259.86	239.4	1.17	8	PVC	0.01	761	4	4	9	1.1		
Kirkland_Main-120	Kirkland_Manholes-109	325.4	Kirkland_Manholes-110	324.77	37.7	1.67	8	PVC	0.01	912	16	54	70	7.6		
Kirkland_Main-121	Kirkland_Manholes-110	324.77	Kirkland_Manholes-111	324	11.2	6.85	8	PVC	0.01	1,846	24	77	101	5.5		
Kirkland_Main-122	Kirkland_Manholes-108	326.5	Kirkland_Manholes-109	325.4	336.7	0.33	8	PVC	0.01	403	13	31	43	10.8		
Kirkland_Main-123	Kirkland_Manholes-112	326.56	Kirkland_Manholes-110	324.77	134.2	1.33	8	PVC	0.01	814	8	15	23	2.8		
Kirkland_Main-124	Kirkland_Manholes-113	357.54	Kirkland_Manholes-112	326.56	558	5.55	8	PVC	0.01	1,661	5	8	13	0.8		
Kirkland_Main-125	Kirkland_Manholes-134	351.46	Kirkland_Manholes-835	347	314.9	1.42	8	PVC	0.01	839	2	4	6	0.8		Drop Connection
Kirkland_Main-126	Kirkland_Manholes-128	355.4	Kirkland_Manholes-127	354	128.2	1.09	8	PVC	0.01	737	2	4	7	0.9		
Kirkland_Main-127	Kirkland_Manholes-127	354	Kirkland_Manholes-126	343.91	279.9	3.6	8	PVC	0.01	1,339	4	9	12	0.9		
Kirkland_Main-128	Kirkland_Manholes-126	343.91	Kirkland_Manholes-125	337.71	240.8	2.58	8	PVC	0.01	1,131	6	13	19	1.7		
Kirkland_Main-129	Kirkland_Manholes-125	337.71	Kirkland_Manholes-838	337.31	98.6	0.41	8	PVC	0.01	449	8	17	26	5.7		
Kirkland_Main-130	Kirkland_Manholes-129	356.73	Kirkland_Manholes-130	350.77	205.5	2.9	8	PVC	0.01	1,201	3	4	8	0.6	SM14-Ex-EX32	
Kirkland_Main-131	Kirkland_Manholes-130	350.77	Kirkland_Manholes-131	322.01	184.9	15.56	8	PVC	0.01	2,781	5	9	14	0.5		
Kirkland_Main-132	Kirkland_Manholes-133	323.35	Kirkland_Manholes-131	322.01	242.6	0.55	8	PVC	0.01	524	36	77	113	21.5		
Kirkland_Main-133	Kirkland_Manholes-842	324.88	Kirkland_Manholes-133	323.35	209.8	0.73	8	PVC	0.01	602	34	73	107	17.7		
Kirkland_Main-134	Kirkland_Manholes-131	322.01	Kirkland_Manholes-132	319.83	182.3	1.2	8	PVC	0.01	771	42	90	132	17.2		
Kirkland_Main-135	Kirkland_Manholes-132	319.83	Kirkland_Manholes-116	315.23	159	2.89	8	PVC	0.01	1,199	44	94	139	11.5		
Kirkland_Main-136	Kirkland_Manholes-115	335.3	Kirkland_Manholes-116	315.23	256.3	7.83	8	PVC	0.01	1,973	4	9	188	9.5		
Kirkland_Main-137	Kirkland_Manholes-114	360.4	Kirkland_Manholes-115	335.3	252.2	9.95	8	PVC	0.01	2,224	2	4	6	0.3		
Kirkland_Main-138	Kirkland_Manholes-1806	38.89	Kirkland_Manholes-2926	31.46	54.5	13.64	8	PVC	0.01	2,604	123	312	435	16.7	SM4	

2035 (20-year) with Proposed Improvements - Peak Hour Flow - Pipe Capacity Table

Label	Upstream Node	Upstream Invert Elevation (ft)	Downstream Node	Downstream Invert Elevation (ft)	Length (ft)	Slope (%)	Diameter (in)	Material	Manning's n	Design Capacity (gpm)	Domestic Flow (gpm)	I/I Flow (gpm)	Total Flow (gpm)	Percent Full (%)	CIP No.	Notes
Kirkland_Main-139	Kirkland_Manholes-2926	31.46	Kirkland_Manholes-1396	27.46	24.1	16.61	8	PVC	0.01	2,873	124	320	444	15.4	SM4	
Kirkland_Main-140	Kirkland_Manholes-123	328.2	Kirkland_Manholes-124	326.1	151.9	1.38	8	PVC	0.01	829	3	8	10	1.2		
Kirkland_Main-141	Kirkland_Manholes-124	326.1	Kirkland_Manholes-109	325.4	313.3	0.22	8	PVC	0.01	333	3	15	18	5.5		
Kirkland_Main-142	Kirkland_Manholes-122	345.33	Kirkland_Manholes-108	326.5	238.6	7.89	8	PVC	0.01	1,981	12	23	35	1.8		
Kirkland_Main-143	Kirkland_Manholes-120	360.7	Kirkland_Manholes-121	358.16	294.2	0.86	8	PVC	0.01	655	4	8	12	1.9		
Kirkland_Main-144	Kirkland_Manholes-121	358.16	Kirkland_Manholes-122	345.33	387.6	3.31	8	PVC	0.01	1,283	8	15	23	1.8		
Kirkland_Main-145	Kirkland_Manholes-119	359.58	Kirkland_Manholes-118	354.26	105.6	5.04	8	PVC	0.01	1,583	1	4	5	0.3		
Kirkland_Main-146	Kirkland_Manholes-118	354.26	Kirkland_Manholes-117	315.69	251.8	15.32	8	PVC	0.01	2,760	3	9	12	0.4		
Kirkland_Main-147	Kirkland_Manholes-117	315.69	Kirkland_Manholes-116	315.23	331.8	0.14	8	PVC	0.01	263	4	13	17	6.4		
Kirkland_Main-148	Kirkland_Manholes-116	315.23	Kirkland_Manholes-137	298.8	246.4	6.67	8	PVC	0.01	1,821	53	120	350	19.2		
Kirkland_Main-149	Kirkland_Manholes-137	298.8	Kirkland_Manholes-1076	298.68	103.3	0.12	12	PVC	0.01	709	57	129	362	51.1	SM14-Ex-EX23	
Kirkland_Main-150	Kirkland_Manholes-138	300.28	Kirkland_Manholes-137	298.8	187.2	0.79	8	PVC	0.01	627	2	4	7	1		
Kirkland_Main-151	Kirkland_Manholes-135	297.13	Kirkland_Manholes-136	295.76	244.5	0.56	8	PVC	0.01	528	2	4	7	1.3		
Kirkland_Main-152	Kirkland_Manholes-136	295.76	Kirkland_Manholes-1064	278.57	324.4	5.3	8	PVC	0.01	1,623	4	9	13	0.8		
Kirkland_Main-154	Kirkland_Manholes-139	305.82	Kirkland_Manholes-1078	305.14	98	0.69	8	PVC	0.01	587	1	4	6	1		
Kirkland_Main-156	Kirkland_Manholes-140	281.69	Kirkland_Manholes-141	277.32	84.7	5.16	8	PVC	0.01	1,601	2	4	6	0.4		
Kirkland_Main-157	Kirkland_Manholes-141	277.32	Kirkland_Manholes-142	276.94	95.7	0.4	8	PVC	0.01	446	2	9	10	2.3		Drop Connection
Kirkland_Main-158	Kirkland_Manholes-142	255.54	Kirkland_Manholes-1090	254.86	50.7	1.34	8	PVC	0.01	817	2	13	15	1.8		
Kirkland_Main-160	Kirkland_Manholes-111	324	TREND_WETWELL	317.75	16.6	37.69	8	PVC	0.01	4,328	25	85	109	2.5		
Kirkland_Main-161	Kirkland_Manholes-144	88.96	Kirkland_Manholes-146	84.42	39.5	11.5	8	PVC	0.01	2,391	9	18	27	1.1		
Kirkland_Main-162	Kirkland_Manholes-86	148.26	Kirkland_Manholes-157	123.36	221.1	11.26	8	PVC	0.01	2,366	13	31	45	1.9	SM14-Ex-EX15	
Kirkland_Main-163	Kirkland_Manholes-84	141.87	Kirkland_Manholes-155	126.86	190.9	7.86	8	PVC	0.01	1,977	6	13	19	1	SM14-Ex-EX24	
Kirkland_Main-164	Kirkland_Manholes-156	125.08	Kirkland_Manholes-157	123.36	264.1	0.65	8	PVC	0.01	569	9	22	31	5.5	SM14-Ex-EX24	
Kirkland_Main-165	Kirkland_Manholes-157	123.36	Kirkland_Manholes-158	121.97	144.6	0.96	8	PVC	0.01	691	24	58	82	11.8	SM14-Ex-EX15	
Kirkland_Main-166	Kirkland_Manholes-147	139.14	Kirkland_Manholes-148	138.62	289.8	0.18	8	PVC	0.01	299	57	120	178	59.4	SM14-Ex-EX25	
Kirkland_Main-167	Kirkland_Manholes-148	138.62	Kirkland_Manholes-149	122.95	57.1	27.47	8	PVC	0.01	3,695	58	125	183	4.9	SM14-Ex-EX25	
Kirkland_Main-168	Kirkland_Manholes-149	122.95	Kirkland_Manholes-150	116.05	168.5	4.1	8	PVC	0.01	1,427	58	129	188	13.2	SM14-Ex-EX25	
Kirkland_Main-169	Kirkland_Manholes-153	130.01	Kirkland_Manholes-150	116.05	56.4	24.77	8	PVC	0.01	3,509	7	18	25	0.7	SM14-Ex-EX26	
Kirkland_Main-170	Kirkland_Manholes-150	116.05	Kirkland_Manholes-159	80.68	226.3	15.63	8	PVC	0.01	2,788	72	174	246	8.8	SM14-Ex-EX28	
Kirkland_Main-171	Kirkland_Manholes-151	132.11	Kirkland_Manholes-150	116.05	132.2	12.15	8	PVC	0.01	2,458	5	22	28	1.1	SM14-Ex-EX27	
Kirkland_Main-172	Kirkland_Manholes-152	157.79	Kirkland_Manholes-151	132.11	148.9	17.25	8	PVC	0.01	2,928	4	18	22	0.8	SM14-Ex-EX27	
Kirkland_Main-173	Kirkland_Manholes-174	143.33	Kirkland_Manholes-153	130.01	57.7	23.09	8	PVC	0.01	3,388	6	13	19	0.6	SM14-Ex-EX26	
Kirkland_Main-174	Kirkland_Manholes-89	177.59	Kirkland_Manholes-174	143.33	179.4	19.1	8	PVC	0.01	3,081	5	9	14	0.4	SM14-Ex-EX26	
Kirkland_Main-175	Kirkland_Manholes-155	126.86	Kirkland_Manholes-156	125.08	248.1	0.72	8	PVC	0.01	597	7	18	24	4.1	SM14-Ex-EX24	
Kirkland_Main-176	Kirkland_Manholes-158	121.97	Kirkland_Manholes-160	41.73	324.9	24.69	8	PVC	0.01	3,504	26	62	88	2.5	SM14-Ex-EX15	
Kirkland_Main-177	Kirkland_Manholes-160	41.73	Kirkland_Manholes-175	34.4	159.3	4.6	8	PVC	0.01	1,512	27	67	94	6.2	SM14-Ex-EX15	
Kirkland_Main-178	Kirkland_Manholes-168	22.33	Kirkland_Manholes-166	21.44	221.6	0.4	8	PVC	0.01	446	2	4	6	1.4		
Kirkland_Main-179	Kirkland_Manholes-165	60.59	Kirkland_Manholes-166	21.44	398.8	9.82	8	PVC	0.01	2,209	2	4	6	0.3		
Kirkland_Main-180	Kirkland_Manholes-166	21.44	Kirkland_Manholes-167	21.4	9.5	0.4	8	PVC	0.01	445	4	13	17	3.9		Drop Connection
Kirkland_Main-181	Kirkland_Manholes-143	71.16	Kirkland_Manholes-164	59.16	83.9	14.3	8	PVC	0.01	2,666	20	49	69	2.6		
Kirkland_Main-182	Kirkland_Manholes-146	84.42	Kirkland_Manholes-143	71.16	154.2	8.6	8	PVC	0.01	2,067	17	40	57	2.8		
Kirkland_Main-183	Kirkland_Manholes-163	106.36	Kirkland_Manholes-146	84.42	161.9	13.55	8	PVC	0.01	2,596	7	18	25	1		
Kirkland_Main-184	Kirkland_Manholes-161	132.09	Kirkland_Manholes-162	124.37	152	5.08	8	PVC	0.01	1,589	5	9	14	0.9		
Kirkland_Main-185	Kirkland_Manholes-162	124.37	Kirkland_Manholes-163	106.36	185.8	9.69	8	PVC	0.01	2,195	6	13	20	0.9		
Kirkland_Main-186	Kirkland_Manholes-169	21.92	Kirkland_Manholes-167	19.46	234.8	1.05	18	PVC	0.01	6,274	490	1,151	1,641	26.2	SM3	
Kirkland_Main-187	Kirkland_Manholes-170	23.23	Kirkland_Manholes-169	21.92	100.1	1.31	18	PVC	0.01	7,012	485	1,134	1,619	23.1	SM3	
Kirkland_Main-188	Kirkland_Manholes-2762	13.1	Kirkland_Manholes-2761	12.79	196.5	0.16	36	PVC	0.01	15,458	687	1,626	2,614	16.9	SM14-Ex-EX10	
Kirkland_Main-189	Kirkland_Manholes-173	34.1	Kirkland_Manholes-172	31.43	44.6	5.99	8	PVC	0.01	1,725	4	13	17	1		
Kirkland_Main-190	Kirkland_Manholes-178	67.04	Kirkland_Manholes-179	37.91	174.4	16.71	8	PVC	0.01	2,882	6	9	15	0.5		
Kirkland_Main-191	Kirkland_Manholes-154	101.95	Kirkland_Manholes-178	67.04	253.3	13.78	8	PVC	0.01	2,617	3	4	8	0.3		
Kirkland_Main-192	Kirkland_Manholes-188	58.06	Kirkland_Manholes-187	54.23	46.2	8.28	15	PVC	0.01	10,848	333	692	1,025	9.4	SM14-Ex-EX30	
Kirkland_Main-193	Kirkland_Manholes-187	54.23	Kirkland_Manholes-185	53.13	306	0.36	36	PVC	0.01	23,331	334	696	1,031	4.4	SM14-Ex-EX30	
Kirkland_Main-194	Kirkland_Manholes-159	80.68	Kirkland_Manholes-186	56.15	205.5	11.94	8	PVC	0.01	2,436	73	179	252	10.3	SM14-Ex-EX28	
Kirkland_Main-195	Kirkland_Manholes-189	57.91	Kirkland_Manholes-186	56.15	258.6	0.68	8	PVC	0.01	582	2	4	6	1.1	SM14-Ex-EX29	
Kirkland_Main-196	Kirkland_Manholes-186	56.15	Kirkland_Manholes-185	53.13	48.4	6.24	12	PVC	0.01	5,193	77	187	264	5.1	SM14-Ex-EX28	
Kirkland_Main-197	Kirkland_Manholes-185	53.13	Kirkland_Manholes-183	41.05	170.7	7.08	15	PVC	0.01	10,026	412	888	1,300	13	SM14-Ex-EX30	
Kirkland_Main-198	Kirkland_Manholes-182	53.5	Kirkland_Manholes-181	38.4	151.6	9.96	8	PVC	0.01	2,225	2	4	6	0.3		
Kirkland_Main-199	Kirkland_Manholes-314	150.22	Kirkland_Manholes-315	148.46	139.8	1.26	8	PVC	0.01	791	0	4	5	0.6		
Kirkland_Main-200	Kirkland_Manholes-315	148.46	Kirkland_Manholes-316	147.8	125.4	0.53	8	PVC	0.01	512	1	9	10	1.9		
Kirkland_Main-201	Kirkland_Manholes-316	147.8	Kirkland_Manholes-317	146.79	246.9	0.41	12	PVC	0.01	1,330	171	330	501	37.7	SM14-Ex-EX30	
Kirkland_Main-202	Kirkland_Manholes-1205	19.63	Kirkland_Manholes-1850	19.39	404.6	0.06	8	PVC	0.01	172	1	7	7	4.3	SM10	
Kirkland_Main-203	Kirkland_Manholes-1187	22.69	Kirkland_Manholes-1188	22.09	184.7	0.32	12	PVC	0.01	1,185	1	9	10	0.8	SM14-Ex-EX37	

2035 (20-year) with Proposed Improvements - Peak Hour Flow - Pipe Capacity Table

Label	Upstream Node	Upstream Invert Elevation (ft)	Downstream Node	Downstream Invert Elevation (ft)	Length (ft)	Slope (%)	Diameter (in)	Material	Manning's n	Design Capacity (gpm)	Domestic Flow (gpm)	I/I Flow (gpm)	Total Flow (gpm)	Percent Full (%)	CIP No.	Notes
Kirkland_Main-204	Kirkland_Manholes-1188	22.09	Kirkland_Manholes-1189	21.99	127.3	0.08	12	PVC	0.01	583	2	18	20	3.4	SM14-Ex-EX37	
Kirkland_Main-205	Kirkland_Manholes-1189	21.99	Kirkland_Manholes-1202	18.39	139.2	2.59	12	PVC	0.01	3,343	4	27	30	0.9	SM14-Ex-EX37	
Kirkland_Main-206	Kirkland_Manholes-1202	18.39	Kirkland_Manholes-1203	18.22	388.5	0.04	12	PVC	0.01	435	6	35	42	9.6	SM14-Ex-EX37	
Kirkland_Main-207	Kirkland_Manholes-1203	18.22	Kirkland_Manholes-1204	17.89	122.5	0.27	12	PVC	0.01	1,079	7	44	51	4.8	SM14-Ex-EX37	
Kirkland_Main-208	Kirkland_Manholes-1204	17.89	Kirkland_Manholes-516	17.69	304.6	0.07	12	PVC	0.01	533	9	53	62	11.7	SM14-Ex-EX37	
Kirkland_Main-209	Kirkland_Manholes-1197	181.82	Kirkland_Manholes-1196	172.3	310.3	3.07	8		0.012	1,029	7	41	48	4.7		
Kirkland_Main-210	Kirkland_Manholes-1196	172.3	Kirkland_Manholes-1195	162.64	327.7	2.95	8		0.012	1,009	8	50	58	5.7		
Kirkland_Main-211	Kirkland_Manholes-1195	162.64	Kirkland_Manholes-1190	151.12	307.8	3.74	8		0.012	1,137	9	58	67	5.9		
Kirkland_Main-212	Kirkland_Manholes-1190	151.12	Kirkland_Manholes-1405	132.7	345	5.34	8		0.012	1,358	12	74	87	6.4		
Kirkland_Main-213	Kirkland_Manholes-1191	345.24	Kirkland_Manholes-1192	340.89	127.3	3.42	6	Vitrified Clay	0.013	465	16	4	20	4.4		
Kirkland_Main-214	Kirkland_Manholes-1192	340.89	Kirkland_Manholes-1193	318.62	250.8	8.88	6	Vitrified Clay	0.013	750	68	9	77	10.2		
Kirkland_Main-215	Kirkland_Manholes-1193	318.62	Kirkland_Manholes-1194	312.16	165.2	3.91	6	Vitrified Clay	0.013	498	68	13	81	16.3		
Kirkland_Main-216	Kirkland_Manholes-1194	312.16	Kirkland_Manholes-1212	307.51	140.5	3.31	6	Concrete	0.013	458	69	17	86	18.7		
Kirkland_Main-217	Kirkland_Manholes-1146	215.3	Kirkland_Manholes-500	209.24	317	1.91	8	PVC	0.01	975	18	50	68	7	SM4	
Kirkland_Main-218	Kirkland_Manholes-1225	212.63	Kirkland_Manholes-1147	194.47	343.1	5.29	8	PVC	0.01	1,622	2	8	11	0.7	SM14-Ex-EX88	
Kirkland_Main-219	Kirkland_Manholes-500	209.24	Kirkland_Manholes-1147	194.47	315.3	4.68	8	PVC	0.01	1,526	26	66	92	6	SM4	
Kirkland_Main-220	Kirkland_Manholes-1149	192.13	Kirkland_Manholes-1148	179.25	269.3	4.78	8	PVC	0.01	1,542	25	64	89	5.8	SM14-Ex-EX89	
Kirkland_Main-221	Kirkland_Manholes-1147	194.47	Kirkland_Manholes-1148	179.25	319	4.77	8	PVC	0.01	1,540	31	83	114	7.4	SM4	
Kirkland_Main-222	Kirkland_Manholes-1148	179.25	Kirkland_Manholes-1796	160.8	313.7	5.88	8	PVC	0.01	1,710	59	155	214	12.5	SM4	
Kirkland_Main-223	Kirkland_Manholes-1171	160.49	Kirkland_Manholes-1150	151.79	210.3	4.14	8	PVC	0.01	1,434	15	41	56	3.9	SM10	
Kirkland_Main-224	Kirkland_Manholes-1129	164.28	Kirkland_Manholes-1128	162.57	73.5	2.33	8	PVC	0.01	1,075	0	4	4	0.4	SM14-Ex-EX4	
Kirkland_Main-225	Kirkland_Manholes-1111	165.6	O-8	165.51	22.8	0.4	8	PVC	0.01	446	1	9	10	2.2		
Kirkland_Main-227	Kirkland_Manholes-197	50.1	Kirkland_Manholes-196	49.03	107.3	1	8	PVC	0.01	704	12	36	47	6.7	SM14-Ex-EX43	
Kirkland_Main-228	Kirkland_Manholes-196	49.03	Kirkland_Manholes-195	48.03	74.6	1.34	8	PVC	0.01	816	12	40	53	6.4	SM14-Ex-EX43	
Kirkland_Main-229	Kirkland_Manholes-740	221.28	Kirkland_Manholes-711	219.85	98.7	1.45	8	PVC	0.01	849	10	4	15	1.7		
Kirkland_Main-230	Kirkland_Manholes-1107	164.79	O-9	160.2	26.3	17.47	8	PVC	0.01	2,947	1	9	9	0.3	SM14-Ex-EX21	
Kirkland_Main-231	Kirkland_Manholes-1106	168.9	O-10	168.5	24.6	1.64	18	PVC	0.01	7,851	913	2,292	3,205	40.8		Drop Connection
Kirkland_Main-232	Kirkland_Manholes-1118	200.71	Kirkland_Manholes-1117	196.58	128.3	3.22	8	PVC	0.01	1,265	2	4	7	0.5		
Kirkland_Main-233	Kirkland_Manholes-1115	186.39	Kirkland_Manholes-1114	181.51	185.2	2.63	15	PVC	0.01	6,118	22	17	39	0.6		
Kirkland_Main-234	Kirkland_Manholes-1114	181.51	Kirkland_Manholes-1113	180.6	148.4	0.61	15	PVC	0.01	2,952	40	21	61	2.1		
Kirkland_Main-235	Kirkland_Manholes-1143	203.09	Kirkland_Manholes-1144	194	101.9	8.92	8	PVC	0.01	2,105	1	8	10	0.5	SM14-Ex-EX82	
Kirkland_Main-236	Kirkland_Manholes-1144	194	Kirkland_Manholes-1145	190.6	30.2	11.26	8	PVC	0.01	2,366	3	17	19	0.8		
Kirkland_Main-237	Kirkland_Manholes-1145	190.6	Kirkland_Manholes-1211	186.99	174.5	2.07	8	PVC	0.01	1,014	6	25	30	3		
Kirkland_Main-238	Kirkland_Manholes-1184	19.39	Kirkland_Manholes-1185	19.29	139.1	0.07	12	PVC	0.01	557	36	177	212	38.1	SM14-Ex-EX37	
Kirkland_Main-239	Kirkland_Manholes-1183	19.89	Kirkland_Manholes-1184	19.39	178.8	0.28	12	PVC	0.01	1,099	34	168	202	18.4	SM14-Ex-EX37	
Kirkland_Main-242	Kirkland_Manholes-1131	191.56	Kirkland_Manholes-1200	169.25	277.8	8.03	8	PVC	0.01	1,998	21	42	63	3.2	SM14-Ex-EX63	
Kirkland_Main-243	Kirkland_Manholes-1200	169.25	Kirkland_Manholes-1201	159.96	155.1	5.99	8	PVC	0.01	1,726	25	47	71	4.1	SM14-Ex-EX62	
Kirkland_Main-244	Kirkland_Manholes-1201	159.96	Kirkland_Manholes-1182	159	65	1.48	8	PVC	0.01	857	26	51	77	9	SM14-Ex-EX62	
Kirkland_Main-245	Kirkland_Manholes-1182	159	Kirkland_Manholes-529	155.16	83.2	4.62	8	PVC	0.01	1,515	27	55	82	5.4	SM14-Ex-EX62	If flow exceeds capacity, overflow MH will be activated; model appropriately.
Kirkland_Main-246	Kirkland_Manholes-529	155.16	Kirkland_Manholes-527	146.55	210.2	4.1	8	PVC	0.01	1,427	28	60	88	6.1	SM10	
Kirkland_Main-247	Kirkland_Manholes-516	17.69	Kirkland_Manholes-2958	17.19	310.2	0.16	12	PVC	0.01	835	10	62	72	8.6	SM14-Ex-EX37	
Kirkland_Main-248	Kirkland_Manholes-318	146.51	Kirkland_Manholes-2957	145.86	162.1	0.4	12	PVC	0.01	1,315	171	339	511	38.8	SM14-Ex-EX30	
Kirkland_Main-249	Kirkland_Manholes-2957	145.86	Kirkland_Manholes-426	144.6	315.5	0.4	12	PVC	0.01	1,315	176	344	519	39.5	SM14-Ex-EX30	
Kirkland_Main-251	Kirkland_Manholes-524	157.52	Kirkland_Manholes-525	156.27	278.3	0.45	8	PVC	0.01	473	3	17	19	4.1	SM10	
Kirkland_Main-253	Kirkland_Manholes-2932	327.56	Kirkland_Manholes-2931	326.77	30	2.63	8	PVC	0.01	1,144	7	26	33	2.9		
Kirkland_Main-254	Kirkland_Manholes-2931	326.77	Kirkland_Manholes-2930	326.38	131.8	0.3	8	PVC	0.01	384	8	30	38	10		
Kirkland_Main-255	Kirkland_Manholes-2930	326.38	Kirkland_Manholes-878	325.66	147.9	0.49	8	PVC	0.01	492	10	34	44	9		
Kirkland_Main-257	Kirkland_Manholes-2345	343.84	Kirkland_Manholes-2343	315.2	169.5	16.9	8	PVC	0.01	2,898	9	21	30	1	SM14-Ex-EX255	
Kirkland_Main-258	Kirkland_Manholes-2344	315.75	Kirkland_Manholes-2343	315.2	137.3	0.4	8	PVC	0.01	446	8	13	21	4.6	SM14-Ex-EX254	
Kirkland_Main-259	Kirkland_Manholes-2256	329.88	Kirkland_Manholes-2344	315.75	334.7	4.22	8	PVC	0.01	1,449	5	9	13	0.9	SM14-Ex-EX254	
Kirkland_Main-261	Kirkland_Manholes-2346	349.24	Kirkland_Manholes-2345	343.84	323.2	1.67	8	PVC	0.01	911	2	4	7	0.7	SM14-Ex-EX255	
Kirkland_Main-262	Kirkland_Manholes-2347	359.76	Kirkland_Manholes-2345	343.84	158.1	10.07	8	PVC	0.01	2,237	4	13	16	0.7	SM14-Ex-EX255	
Kirkland_Main-263	Kirkland_Manholes-2348	314.6	Kirkland_Manholes-2334	313.34	224.3	0.56	8	PVC	0.01	528	19	43	62	11.7	SM14-Ex-EX254	
Kirkland_Main-264	Kirkland_Manholes-2350	364.04	Kirkland_Manholes-2347	359.76	357	1.2	8	PVC	0.01	772	1	4	5	0.7	SM14-Ex-EX255	
Kirkland_Main-265	Kirkland_Manholes-2351	360.37	Kirkland_Manholes-2347	359.76	181.2	0.34	8	PVC	0.01	409	2	4	6	1.4	SM14-Ex-EX255	
Kirkland_Main-266	Kirkland_Manholes-2352	284.5	Kirkland_Manholes-2259	272.05	240.1	5.18	8	PVC	0.01	1,605	1	4	5	0.3	SM14-Ex-EX250	
Kirkland_Main-267	Kirkland_Manholes-2353	298.2	Kirkland_Manholes-2332	296.43	253	0.7	8	PVC	0.01	590	3	4	7	1.2	SM14-Ex-EX253	
Kirkland_Main-268	Kirkland_Manholes-2355	240.55	Kirkland_Manholes-2124	217.78	364.4	6.25	12	PVC	0.01	5,196	409	953	1,362	26.2	SM14-Ex-EX248	
Kirkland_Main-269	Kirkland_Manholes-2354	256.04	Kirkland_Manholes-2355	240.55	281.2	5.51	12	PVC	0.01	4,879	406	949	1,354	27.8	SM14-Ex-EX248	
Kirkland_Main-270	Kirkland_Manholes-2357	271.18	Kirkland_Manholes-2354	256.04	199.4	7.59	8	PVC	0.01	1,943	3	9	12	0.6	SM14-Ex-EX249	
Kirkland_Main-271	Kirkland_Manholes-2258	263.77	Kirkland_Manholes-2354	256.04	150.5	5.14	12	PVC	0.01	4,711	401	936	1,337	28.4	SM14-Ex-EX248	

2035 (20-year) with Proposed Improvements - Peak Hour Flow - Pipe Capacity Table

Label	Upstream Node	Upstream Invert Elevation (ft)	Downstream Node	Downstream Invert Elevation (ft)	Length (ft)	Slope (%)	Diameter (in)	Material	Manning's n	Design Capacity (gpm)	Domestic Flow (gpm)	I/I Flow (gpm)	Total Flow (gpm)	Percent Full (%)	CIP No.	Notes
Kirkland_Main-272	Kirkland_Manholes-2356	278.21	Kirkland_Manholes-2357	271.18	149.2	4.71	8	PVC	0.01	1,530	2	4	6	0.4		
Kirkland_Main-273	Kirkland_Manholes-2324	245.37	Kirkland_Manholes-2420	230.11	227.1	6.72	8	PVC	0.01	1,828	57	159	216	11.8		
Kirkland_Main-274	Kirkland_Manholes-2358	262.09	Kirkland_Manholes-2412	260.78	357.3	0.37	8	PVC	0.01	427	5	9	13	3.1		
Kirkland_Main-275	Kirkland_Manholes-2359	271.5	Kirkland_Manholes-2358	262.09	128.6	7.32	8	PVC	0.01	1,907	3	4	7	0.4		
Kirkland_Main-276	Kirkland_Manholes-2362	285.37	Kirkland_Manholes-2360	266.1	385.1	5	8	PVC	0.01	1,577	26	64	90	5.7		
Kirkland_Main-277	Kirkland_Manholes-2360	266.1	Kirkland_Manholes-2411	259.15	259.9	2.67	8	PVC	0.01	1,153	28	69	97	8.4		
Kirkland_Main-278	Kirkland_Manholes-2361	291.01	Kirkland_Manholes-2362	285.37	28	20.16	8	PVC	0.01	3,166	4	9	13	0.4		
Kirkland_Main-279	Kirkland_Manholes-2371	291.2	Kirkland_Manholes-2362	285.37	123.7	4.71	8	PVC	0.01	1,530	21	52	72	4.7		
Kirkland_Main-280	Kirkland_Manholes-2363	291.88	Kirkland_Manholes-2361	291.01	353	0.25	8	PVC	0.01	350	2	4	7	1.9		
Kirkland_Main-281	Kirkland_Manholes-2364	284.3	Kirkland_Manholes-2429	273.52	255	4.23	8	PVC	0.01	1,450	37	99	136	9.4	SM14-Ex-EX260	
Kirkland_Main-282	Kirkland_Manholes-2382	327.1	Kirkland_Manholes-2369	315.99	220.4	5.04	8	PVC	0.01	1,583	3	4	8	0.5		
Kirkland_Main-283	Kirkland_Manholes-2369	315.99	Kirkland_Manholes-2370	312.97	65.7	4.59	8	PVC	0.01	1,511	31	73	104	6.9	SM14-Ex-EX260	
Kirkland_Main-284	Kirkland_Manholes-2383	328.5	Kirkland_Manholes-2369	315.99	277.1	4.51	8	PVC	0.01	1,498	26	64	90	6	SM14-Ex-EX260	
Kirkland_Main-285	Kirkland_Manholes-2370	312.97	Kirkland_Manholes-2367	295.27	303.5	5.83	8	PVC	0.01	1,703	32	77	109	6.4	SM14-Ex-EX260	
Kirkland_Main-286	Kirkland_Manholes-2365	289.93	Kirkland_Manholes-2364	284.3	103.6	5.44	8	PVC	0.01	1,644	36	94	130	7.9	SM14-Ex-EX260	
Kirkland_Main-287	Kirkland_Manholes-2367	295.27	Kirkland_Manholes-2366	292.68	34.9	7.43	8	PVC	0.01	1,921	33	82	115	6	SM14-Ex-EX260	
Kirkland_Main-288	Kirkland_Manholes-181	38.4	Kirkland_Manholes-180	38.25	24	0.62	8	PVC	0.01	555	3	13	16	2.9		
Kirkland_Main-289	Kirkland_Manholes-184	40.15	Kirkland_Manholes-181	38.4	362.3	0.48	8	PVC	0.01	490	1	4	5	1		
Kirkland_Main-290	Kirkland_Manholes-180	38.25	Kirkland_Manholes-179	37.91	155.1	0.22	18	PVC	0.01	2,874	437	991	1,427	49.7	SM3	
Kirkland_Main-291	Kirkland_Manholes-179	37.91	Kirkland_Manholes-177	35.5	248.2	0.97	18	PVC	0.01	6,039	443	1,004	1,447	24	SM3	
Kirkland_Main-292	Kirkland_Manholes-177	35.5	Kirkland_Manholes-176	34.72	401.5	0.19	18	PVC	0.01	2,705	451	1,031	1,482	54.8	SM3	
Kirkland_Main-293	Kirkland_Manholes-176	34.72	Kirkland_Manholes-175	34.4	144.6	0.22	18	PVC	0.01	2,875	452	1,035	1,487	51.7	SM3	
Kirkland_Main-294	Kirkland_Manholes-175	34.4	Kirkland_Manholes-171	25.99	328.5	2.56	18	PVC	0.01	9,806	479	1,107	1,586	16.2	SM3	
Kirkland_Main-295	Kirkland_Manholes-171	25.99	Kirkland_Manholes-170	25.29	316.1	0.22	18	PVC	0.01	2,875	484	1,129	1,613	56.1	SM3	Drop Connection
Kirkland_Main-296	Kirkland_Manholes-172	31.43	Kirkland_Manholes-171	31.34	21.8	0.4	8	PVC	0.01	446	4	18	22	5		Drop Connection
Kirkland_Main-297	Kirkland_Manholes-190	38.49	Kirkland_Manholes-180	38.25	107	0.22	15	PVC	0.01	1,763	434	973	1,407	79.8	SM3	
Kirkland_Main-298	Kirkland_Manholes-183	41.05	Kirkland_Manholes-190	38.49	284.2	0.9	15	PVC	0.01	3,580	433	968	1,401	39.1	SM3	
Kirkland_Main-299	Kirkland_Manholes-167	19.46	Kirkland_Manholes-241	14.7	339.1	1.4	18	PVC	0.01	7,261	494	1,169	1,663	22.9	SM3	
Kirkland_Main-300	Kirkland_Manholes-164	59.16	Kirkland_Manholes-242	58.15	252.4	0.4	8	PVC	0.01	446	22	54	76	17		Drop Connection
Kirkland_Main-301	Kirkland_Manholes-203	83.91	Kirkland_Manholes-202	68.28	127.4	12.27	8	PVC	0.01	2,470	1	4	6	0.2		
Kirkland_Main-302	Kirkland_Manholes-202	68.28	Kirkland_Manholes-204	54.86	133.6	10.05	8	PVC	0.01	2,235	2	9	11	0.5		
Kirkland_Main-303	Kirkland_Manholes-204	54.86	Kirkland_Manholes-169	21.92	184.1	17.89	8	PVC	0.01	2,982	4	13	18	0.6		
Kirkland_Main-304	Kirkland_Manholes-209	226.32	Kirkland_Manholes-210	216.33	137.5	7.27	8	PVC	0.01	1,901	3	4	7	0.4	SM14-Ex-EX66	
Kirkland_Main-306	Kirkland_Manholes-214	228.3	Kirkland_Manholes-213	213.69	210.7	6.93	8	PVC	0.01	1,856	3	4	7	0.4		
Kirkland_Main-307	Kirkland_Manholes-213	213.69	Kirkland_Manholes-212	184.62	186.4	15.59	8	PVC	0.01	2,784	7	9	16	0.6		
Kirkland_Main-308	Kirkland_Manholes-212	184.62	Kirkland_Manholes-216	184.01	222.7	0.27	8	PVC	0.01	369	45	103	148	40.1		
Kirkland_Main-309	Kirkland_Manholes-211	186.37	Kirkland_Manholes-212	184.62	362.4	0.48	8	PVC	0.01	490	36	89	125	25.5		
Kirkland_Main-310	Kirkland_Manholes-210	216.33	Kirkland_Manholes-211	186.37	372.2	8.05	8	PVC	0.01	2,000	6	9	15	0.8	SM14-Ex-EX66	
Kirkland_Main-312	Kirkland_Manholes-216	184.01	Kirkland_Manholes-217	183.22	296	0.27	8	PVC	0.01	364	47	107	154	42.3		
Kirkland_Main-313	Kirkland_Manholes-215	220.47	Kirkland_Manholes-217	183.22	347.3	10.73	8	PVC	0.01	2,309	5	4	9	0.4		
Kirkland_Main-314	Kirkland_Manholes-208	241.09	Kirkland_Manholes-207	240.8	258.2	0.11	8	PVC	0.01	236	5	13	18	7.8	SM14-Ex-EX57	
Kirkland_Main-315	Kirkland_Manholes-207	240.8	Kirkland_Manholes-206	239.08	251.3	0.68	8	PVC	0.01	583	9	18	26	4.5	SM14-Ex-EX57	
Kirkland_Main-316	Kirkland_Manholes-1236	256.67	Kirkland_Manholes-206	239.08	279.5	6.29	8	PVC	0.01	1,769	6	9	15	0.8	SM14-Ex-EX60	
Kirkland_Main-317	Kirkland_Manholes-206	239.08	Kirkland_Manholes-205	228.15	235.6	4.64	8	PVC	0.01	1,519	16	31	47	3.1	SM14-Ex-EX57	
Kirkland_Main-318	Kirkland_Manholes-227	223.31	Kirkland_Manholes-226	219.39	138.6	2.83	8	PVC	0.01	1,186	9	31	41	3.4		
Kirkland_Main-319	Kirkland_Manholes-229	178.29	Kirkland_Manholes-230	172.81	192.8	2.84	8	PVC	0.01	1,189	1	4	6	0.5		
Kirkland_Main-321	Kirkland_Manholes-2569	300.83	Kirkland_Manholes-2570	299.81	42.2	2.42	8	PVC	0.01	1,096	1	4	6	0.5		
Kirkland_Main-323	Kirkland_Manholes-2570	299.81	Kirkland_Manholes-2573	298.95	117.6	0.73	8	PVC	0.01	603	3	13	16	2.7		
Kirkland_Main-325	Kirkland_Manholes-2574	291.72	Kirkland_Manholes-2578	278.46	194.2	6.83	8	PVC	0.01	1,842	8	34	43	2.3		
Kirkland_Main-326	Kirkland_Manholes-2575	296.63	Kirkland_Manholes-2574	291.72	277.7	1.77	8	PVC	0.01	938	8	30	38	4		
Kirkland_Main-327	Kirkland_Manholes-2572	298.88	Kirkland_Manholes-2575	296.63	102.9	2.19	8	PVC	0.01	1,042	6	26	32	3.1		
Kirkland_Main-330	Kirkland_Manholes-2576	288.87	Kirkland_Manholes-2577	284.91	171.7	2.31	8	PVC	0.01	1,071	2	4	6	0.6		
Kirkland_Main-331	Kirkland_Manholes-2577	284.91	Kirkland_Manholes-2580	279.25	137.4	4.12	8	PVC	0.01	1,431	3	9	12	0.8		
Kirkland_Main-332	Kirkland_Manholes-2580	279.25	Kirkland_Manholes-2579	271.58	247.7	3.1	8	PVC	0.01	1,241	4	13	17	1.4		
Kirkland_Main-333	Kirkland_Manholes-2582	256.45	Kirkland_Manholes-2583	255.68	58.5	1.32	8	PVC	0.01	809	21	82	103	12.7	SM14-Ex-EX313	
Kirkland_Main-334	Kirkland_Manholes-2583	255.68	Kirkland_Manholes-2584	252.35	54.4	6.12	8	PVC	0.01	1,744	22	86	108	6.2	SM14-Ex-EX313	
Kirkland_Main-335	Kirkland_Manholes-2584	252.35	Kirkland_Manholes-2787	252.17	133.2	0.14	8	PVC	0.01	259	23	90	113	43.5	SM14-Ex-EX313	
Kirkland_Main-336	Kirkland_Manholes-2581	260.74	Kirkland_Manholes-2582	256.45	63.8	6.72	8	PVC	0.01	1,828	7	21	29	1.6		
Kirkland_Main-337	Kirkland_Manholes-2786	258.1	Kirkland_Manholes-2582	256.45	266.6	0.62	8	PVC	0.01	555	14	56	69	12.5		
Kirkland_Main-338	Kirkland_Manholes-2579	271.58	Kirkland_Manholes-2581	260.74	232.4	4.66	8	PVC	0.01	1,523	6	17	23	1.5		
Kirkland_Main-339	Kirkland_Manholes-2586	274.45	Kirkland_Manholes-2585	272.57	43.2	4.35	8	PVC	0.01	1,471	2	9	10	0.7		
Kirkland_Main-340	Kirkland_Manholes-2587	285.24	Kirkland_Manholes-2586	274.45	298.8	3.61	8	PVC	0.01	1,340	1	4	6	0.4		

2035 (20-year) with Proposed Improvements - Peak Hour Flow - Pipe Capacity Table

Label	Upstream Node	Upstream Invert Elevation (ft)	Downstream Node	Downstream Invert Elevation (ft)	Length (ft)	Slope (%)	Diameter (in)	Material	Manning's n	Design Capacity (gpm)	Domestic Flow (gpm)	I/I Flow (gpm)	Total Flow (gpm)	Percent Full (%)	CIP No.	Notes
Kirkland_Main-342	Kirkland_Manholes-2588	292.14	Kirkland_Manholes-2589	286.31	102.9	5.66	8	PVC	0.01	1,678	31	86	117	7	SM14-Ex-EX303	
Kirkland_Main-343	Kirkland_Manholes-2591	288.43	Kirkland_Manholes-2589	286.31	198.2	1.07	8	PVC	0.01	729	1	4	6	0.8	SM14-Ex-EX305	
Kirkland_Main-344	Kirkland_Manholes-2590	303.32	Kirkland_Manholes-2588	292.14	220.1	5.08	8	PVC	0.01	1,589	13	47	60	3.8	SM14-Ex-EX303	
Kirkland_Main-345	Kirkland_Manholes-2592	294.57	Kirkland_Manholes-2588	292.14	159.1	1.53	8	PVC	0.01	871	3	9	12	1.4	SM14-Ex-EX306	
Kirkland_Main-346	Kirkland_Manholes-2589	286.31	Kirkland_Manholes-2593	281.14	131.6	3.93	8	PVC	0.01	1,398	34	94	129	9.2	SM14-Ex-EX303	
Kirkland_Main-347	Kirkland_Manholes-2593	281.14	Kirkland_Manholes-2585	272.57	372.5	2.3	8	PVC	0.01	1,069	35	99	134	12.5	SM14-Ex-EX299	
Kirkland_Main-348	Kirkland_Manholes-2585	272.57	Kirkland_Manholes-2595	270.48	180.9	1.16	8	PVC	0.01	758	38	112	149	19.7	SM14-Ex-EX299	
Kirkland_Main-349	Kirkland_Manholes-2595	270.48	Kirkland_Manholes-2594	263.61	407.7	1.68	8	PVC	0.01	915	40	116	156	17.1	SM14-Ex-EX299	
Kirkland_Main-350	Kirkland_Manholes-2594	263.61	Kirkland_Manholes-2601	228.74	402.9	8.65	8	PVC	0.01	2,074	44	120	164	7.9	SM14-Ex-EX299	
Kirkland_Main-352	Kirkland_Manholes-2598	252.13	Kirkland_Manholes-2599	217.5	325.5	10.64	8	PVC	0.01	2,300	4	13	17	0.7	SM14-Ex-EX301	
Kirkland_Main-353	Kirkland_Manholes-2597	256.37	Kirkland_Manholes-2598	252.13	172.1	2.46	8	PVC	0.01	1,107	2	9	10	0.9	SM14-Ex-EX301	
Kirkland_Main-354	Kirkland_Manholes-2596	262.84	Kirkland_Manholes-2597	256.37	380.5	1.7	8	PVC	0.01	919	1	4	5	0.5	SM14-Ex-EX301	
Kirkland_Main-355	Kirkland_Manholes-853	340.38	Kirkland_Manholes-851	339.16	105.8	1.16	8	PVC	0.01	758	1	4	5	0.6		
Kirkland_Main-356	Kirkland_Manholes-851	339.16	Kirkland_Manholes-852	338.63	131.5	0.4	8	PVC	0.01	446	12	39	50	11.3		
Kirkland_Main-357	Kirkland_Manholes-852	338.63	Kirkland_Manholes-854	336.98	245.6	0.67	8	PVC	0.01	578	12	43	55	9.5		
Kirkland_Main-358	Kirkland_Manholes-854	336.98	Kirkland_Manholes-855	335.54	321	0.45	8	PVC	0.01	472	14	47	61	12.9		
Kirkland_Main-359	Kirkland_Manholes-855	335.54	Kirkland_Manholes-857	334.93	126.6	0.48	8	PVC	0.01	489	14	52	66	13.5		
Kirkland_Main-360	Kirkland_Manholes-857	334.93	Kirkland_Manholes-856	333.21	25.3	6.8	8	PVC	0.01	1,838	15	56	71	3.9		
Kirkland_Main-361	Kirkland_Manholes-858	311.1	Kirkland_Manholes-859	309.2	142	1.34	8	PVC	0.01	816	3	4	7	0.9	SM14-Ex-EX51	
Kirkland_Main-362	Kirkland_Manholes-198	52.1	Kirkland_Manholes-197	50.1	250.9	0.8	8	PVC	0.01	630	9	31	40	6.4	SM14-Ex-EX43	
Kirkland_Main-363	Kirkland_Manholes-1648	152.03	Kirkland_Manholes-1649	151.45	206.3	0.28	12	PVC	0.01	1,100	7	33	40	3.7	SM14-Ex-EX196	
Kirkland_Main-364	Kirkland_Manholes-1649	151.45	Kirkland_Manholes-1650	145.43	128.4	4.69	12	PVC	0.01	4,501	11	41	52	1.2	SM14-Ex-EX196	
Kirkland_Main-365	Kirkland_Manholes-1651	160.29	Kirkland_Manholes-1650	145.43	297.8	4.99	8	PVC	0.01	1,575	2	17	18	1.2		
Kirkland_Main-366	Kirkland_Manholes-1652	161.6	Kirkland_Manholes-1651	160.29	197.8	0.66	8	PVC	0.01	574	1	8	9	1.6		
Kirkland_Main-369	Kirkland_Manholes-1654	136.96	Kirkland_Manholes-1653	127.26	270	3.59	8	PVC	0.01	1,336	3	8	11	0.8	SM14-Ex-EX168	
Kirkland_Main-370	Kirkland_Manholes-1653	127.26	Kirkland_Manholes-1767	122.16	112.6	4.53	8	PVC	0.01	1,501	7	17	24	1.6	SM14-Ex-EX168	
Kirkland_Main-372	Kirkland_Manholes-977	225.95	Kirkland_Manholes-978	222.9	113.4	2.69	8	PVC	0.01	1,157	13	49	62	5.4		
Kirkland_Main-374	Kirkland_Manholes-2858	23.78	Kirkland_Manholes-2857	19.7	174.1	2.34	8	PVC	0.01	1,079	0	5	5	0.4	SM14-Ex-EX315	
Kirkland_Main-376	Kirkland_Manholes-2865	30.12	Kirkland_Manholes-2864	27	7.9	39.25	8	PVC	0.01	4,417	15	28	43	1	SM14-Ex-EX314	WW Influent Pipe
Kirkland_Main-377	Kirkland_Manholes-2866	31.02	Kirkland_Manholes-2867	30.31	15.5	4.58	8	PVC	0.01	1,509	10	20	31	2	SM14-Ex-EX314	
Kirkland_Main-378	Kirkland_Manholes-2867	30.31	Kirkland_Manholes-2865	30.12	118.6	0.16	8	PVC	0.01	282	10	24	35	12.3	SM14-Ex-EX314	
Kirkland_Main-379	Kirkland_Manholes-2863	49.4	Kirkland_Manholes-2866	31.02	310.1	5.93	8	PVC	0.01	1,716	8	16	24	1.4		
Kirkland_Main-380	Kirkland_Manholes-1905	395.5	Kirkland_Manholes-1906	388.2	277.5	2.63	8	PVC	0.01	1,143	15	43	58	5.1		
Kirkland_Main-381	Kirkland_Manholes-1906	388.2	Kirkland_Manholes-1908	383.29	92.4	5.31	8	PVC	0.01	1,625	25	52	77	4.7		
Kirkland_Main-382	Kirkland_Manholes-1908	383.29	Kirkland_Manholes-1909	380	18.3	18.02	8	PVC	0.01	2,993	36	64	100	3.3		
Kirkland_Main-383	Kirkland_Manholes-1910	392.49	Kirkland_Manholes-1908	383.29	192.6	4.78	8	PVC	0.01	1,541	10	9	19	1.2		
Kirkland_Main-386	Kirkland_Manholes-1911	394.49	Kirkland_Manholes-1910	392.49	114.9	1.74	8	PVC	0.01	930	0	4	5	0.5		
Kirkland_Main-388	Kirkland_Manholes-1912	380.62	Kirkland_Manholes-1907	380.32	64.6	0.46	8	PVC	0.01	480	20	9	29	6		
Kirkland_Main-389	Kirkland_Manholes-1913	381.47	Kirkland_Manholes-1912	380.62	181.1	0.47	8	PVC	0.01	483	20	4	24	5		
Kirkland_Main-390	Kirkland_Manholes-1915	403.84	Kirkland_Manholes-1903	399.77	113	3.6	8	PVC	0.01	1,338	2	4	7	0.5		
Kirkland_Main-391	Kirkland_Manholes-1914	376.04	Kirkland_Manholes-1916	361.73	343.6	4.16	8	PVC	0.01	1,439	1	4	5	0.3		
Kirkland_Main-392	Kirkland_Manholes-1916	361.73	Kirkland_Manholes-1965	345.05	397.2	4.2	8	PVC	0.01	1,445	35	21	56	3.9		
Kirkland_Main-393	Kirkland_Manholes-1917	413.2	Kirkland_Manholes-1919	411.73	326.8	0.45	12	PVC	0.01	1,394	98	206	304	21.8	SM14-Ex-EX215	
Kirkland_Main-394	Kirkland_Manholes-1918	411.61	Kirkland_Manholes-1920	409.24	389.6	0.61	12	PVC	0.01	1,622	155	386	542	33.4	SM14-Ex-EX215	
Kirkland_Main-395	Kirkland_Manholes-1919	411.73	Kirkland_Manholes-1918	411.61	19.4	0.61	12	PVC	0.01	1,622	100	210	310	19.1	SM14-Ex-EX215	
Kirkland_Main-396	Kirkland_Manholes-1966	418.21	Kirkland_Manholes-1918	411.61	309.4	2.13	8	PVC	0.01	1,030	55	172	226	22	SM14-Ex-EX216	
Kirkland_Main-397	Kirkland_Manholes-2018	417.59	Kirkland_Manholes-1920	409.24	266.4	3.13	8	PVC	0.01	1,248	2	4	6	0.5		
Kirkland_Main-398	Kirkland_Manholes-2017	412	Kirkland_Manholes-1921	405.86	284.9	2.16	8	PVC	0.01	1,035	11	21	32	3.1		
Kirkland_Main-399	Kirkland_Manholes-1921	405.86	Kirkland_Manholes-1923	399.87	337.2	1.78	12	PVC	0.01	2,771	172	425	597	21.5	SM14-Ex-EX215	Drop Connection
Kirkland_Main-400	Kirkland_Manholes-2013	413.74	Kirkland_Manholes-1922	401.71	397	3.03	8	PVC	0.01	1,227	41	103	144	11.7		
Kirkland_Main-401	Kirkland_Manholes-1924	396.12	Kirkland_Manholes-1925	391.68	40.1	11.08	8	PVC	0.01	2,347	7	17	24	1		
Kirkland_Main-402	Kirkland_Manholes-2012	406.67	Kirkland_Manholes-1924	396.12	354.7	2.97	8	PVC	0.01	1,216	5	13	18	1.5		
Kirkland_Main-403	Kirkland_Manholes-1926	383.42	Kirkland_Manholes-1927	378.37	328.1	1.54	12	PVC	0.01	2,579	225	571	796	30.9	SM14-Ex-EX205	
Kirkland_Main-404	Kirkland_Manholes-1927	378.37	Kirkland_Manholes-1928	375.97	126.7	1.89	12	PVC	0.01	2,862	225	575	800	28	SM14-Ex-EX205	
Kirkland_Main-405	Kirkland_Manholes-1922	401.71	Kirkland_Manholes-3030	397.75	20.7	19.14	8	PVC	0.01	3,085	43	107	151	4.9		
Kirkland_Main-406	Kirkland_Manholes-1923	399.87	Kirkland_Manholes-3030	397.75	24.4	8.7	12	PVC	0.01	6,130	172	429	601	9.8		
Kirkland_Main-407	Kirkland_Manholes-3030	397.75	Kirkland_Manholes-1925	391.68	339.3	1.79	12	PVC	0.01	2,781	216	541	757	27.2		
Kirkland_Main-408	Kirkland_Manholes-1925	391.68	Kirkland_Manholes-3031	384.74	433.2	1.6	12	PVC	0.01	2,631	224	562	786	29.9		
Kirkland_Main-409	Kirkland_Manholes-2750	105.56	Kirkland_Manholes-2749	94.38	64.8	17.26	8	PVC	0.01	2,929	29	6	35	1.2		
Kirkland_Main-410	Kirkland_Manholes-2751	82.43	Kirkland_Manholes-2879	68.04	243.9	5.9	8	PVC	0.01	1,713	1	6	7	0.4	SM14-Ex-EX280	
Kirkland_Main-412	Kirkland_Manholes-373	230.9	Kirkland_Manholes-1080	229.14	244	0.72	8	PVC	0.01	599	95	270	366	61		
Kirkland_Main-413	Kirkland_Manholes-195	48.03	Kirkland_Manholes-193	45.46	195.3	1.32	8	PVC	0.01	809	14	45	59	7.3	SM14-Ex-EX43	

2035 (20-year) with Proposed Improvements - Peak Hour Flow - Pipe Capacity Table

Label	Upstream Node	Upstream Invert Elevation (ft)	Downstream Node	Downstream Invert Elevation (ft)	Length (ft)	Slope (%)	Diameter (in)	Material	Manning's n	Design Capacity (gpm)	Domestic Flow (gpm)	I/I Flow (gpm)	Total Flow (gpm)	Percent Full (%)	CIP No.	Notes
Kirkland_Main-414	Kirkland_Manholes-193	45.46	Kirkland_Manholes-192	42.9	32.1	7.96	8	PVC	0.01	1,990	14	49	63	3.2	SM14-Ex-EX43	
Kirkland_Main-415	Kirkland_Manholes-194	50.84	Kirkland_Manholes-192	50.61	58.2	0.4	8	PVC	0.01	446	4	4	8	1.9		Drop Connection
Kirkland_Main-416	Kirkland_Manholes-192	42.9	Kirkland_Manholes-191	42.5	357.1	0.11	8	PVC	0.01	236	20	71	91	38.6	SM14-Ex-EX44	
Kirkland_Main-417	Kirkland_Manholes-191	42.5	Kirkland_Manholes-183	41.05	287.2	0.5	8	PVC	0.01	501	20	76	96	19.2	SM14-Ex-EX44	
Kirkland_Main-418	Kirkland_Manholes-201	56.98	Kirkland_Manholes-192	42.9	368.5	3.82	8	PVC	0.01	1,378	1	13	14	1	SM14-Ex-EX43	
Kirkland_Main-419	Kirkland_Manholes-199	54.68	Kirkland_Manholes-198	52.1	112.6	2.29	8	PVC	0.01	1,067	7	27	34	3.2	SM14-Ex-EX43	
Kirkland_Main-420	Kirkland_Manholes-2310	256	Kirkland_Manholes-2738	255.5	66.4	0.75	8	PVC	0.01	612	15	27	42	6.8		
Kirkland_Main-421	Kirkland_Manholes-2738	255.5	Kirkland_Manholes-2752	253.8	209.4	0.81	8	PVC	0.01	635	17	31	48	7.6		
Kirkland_Main-422	Kirkland_Manholes-2754	9.95	O-40	9.81	113.1	0.12	36	PVC	0.01	13,690	783	1,930	3,014	22	SM14-Ex-EX10	Drop Connection
Kirkland_Main-423	Kirkland_Manholes-2761	12.79	Kirkland_Manholes-2759	11.56	416.9	0.3	36	PVC	0.01	21,139	782	1,907	2,990	14.1	SM14-Ex-EX10	
Kirkland_Main-425	Kirkland_Manholes-2759	11.56	Kirkland_Manholes-2758	11.2	391.7	0.09	36	PVC	0.01	11,798	782	1,912	2,995	25.4	SM14-Ex-EX10	
Kirkland_Main-426	Kirkland_Manholes-2758	11.2	Kirkland_Manholes-2757	10.95	117.7	0.21	36	PVC	0.01	17,933	782	1,916	2,999	16.7	SM14-Ex-EX10	
Kirkland_Main-428	Kirkland_Manholes-217	183.22	Kirkland_Manholes-230	172.81	258.2	4.03	8	PVC	0.01	1,416	55	116	171	12.1		
Kirkland_Main-429	Kirkland_Manholes-228	142.32	Kirkland_Manholes-232	112.59	208.3	14.27	8	PVC	0.01	2,663	61	134	195	7.3		
Kirkland_Main-430	Kirkland_Manholes-226	219.39	Kirkland_Manholes-225	214.73	200.7	2.32	8	PVC	0.01	1,074	11	36	47	4.3		
Kirkland_Main-431	Kirkland_Manholes-225	214.73	Kirkland_Manholes-223	193.39	169.1	12.62	8	PVC	0.01	2,505	13	40	53	2.1		
Kirkland_Main-432	Kirkland_Manholes-223	193.39	Kirkland_Manholes-224	189.69	263.2	1.41	8	PVC	0.01	836	26	71	98	11.7		
Kirkland_Main-433	Kirkland_Manholes-222	194.04	Kirkland_Manholes-223	193.39	133.1	0.49	8	PVC	0.01	493	12	27	39	7.9		
Kirkland_Main-434	Kirkland_Manholes-221	194.75	Kirkland_Manholes-222	194.04	121.4	0.58	8	PVC	0.01	539	11	22	33	6.1		
Kirkland_Main-435	Kirkland_Manholes-219	195.26	Kirkland_Manholes-221	194.75	115.1	0.44	8	PVC	0.01	469	10	18	27	5.8		
Kirkland_Main-436	Kirkland_Manholes-220	211.06	Kirkland_Manholes-219	195.26	185.5	8.52	8	PVC	0.01	2,057	5	9	14	0.7		
Kirkland_Main-437	Kirkland_Manholes-218	197.04	Kirkland_Manholes-219	195.26	182.3	0.98	8	PVC	0.01	697	2	4	7	1		
Kirkland_Main-438	Kirkland_Manholes-233	215.48	Kirkland_Manholes-220	211.06	169.3	2.61	8	PVC	0.01	1,139	3	4	8	0.7		
Kirkland_Main-439	Kirkland_Manholes-224	189.69	Kirkland_Manholes-211	186.37	292.8	1.13	8	PVC	0.01	751	27	76	103	13.7		
Kirkland_Main-440	Kirkland_Manholes-266	97.98	Kirkland_Manholes-267	95.34	145	1.82	8	PVC	0.01	951	43	87	130	13.7	SM10	If flow exceeds capacity, overflow MH will be activated; model appropriately.
Kirkland_Main-441	Kirkland_Manholes-265	110.6	Kirkland_Manholes-266	97.98	184.6	6.84	8	PVC	0.01	1,844	42	82	124	6.7	SM10	
Kirkland_Main-442	Kirkland_Manholes-262	118.9	Kirkland_Manholes-265	110.6	150.8	5.51	8	PVC	0.01	1,654	40	78	118	7.1	SM10	If flow exceeds capacity, overflow MH will be activated; model appropriately.
Kirkland_Main-443	Kirkland_Manholes-261	130.12	Kirkland_Manholes-262	118.9	278.9	4.02	8	PVC	0.01	1,414	36	73	110	7.7	SM10	
Kirkland_Main-444	Kirkland_Manholes-258	141.4	Kirkland_Manholes-261	130.12	280.6	4.02	8	PVC	0.01	1,414	32	69	101	7.1	SM10	
Kirkland_Main-445	Kirkland_Manholes-527	146.55	Kirkland_Manholes-258	141.4	279.2	1.84	8	PVC	0.01	958	30	64	95	9.9	SM10	
Kirkland_Main-446	Kirkland_Manholes-259	136.12	Kirkland_Manholes-260	130.49	137.7	4.09	8	PVC	0.01	1,426	2	4	6	0.4	SM10	
Kirkland_Main-447	Kirkland_Manholes-260	130.49	Kirkland_Manholes-251	119.87	263.8	4.03	8	PVC	0.01	1,415	4	9	12	0.9	SM10	
Kirkland_Main-448	Kirkland_Manholes-251	119.87	Kirkland_Manholes-250	115.74	110.4	3.74	8	PVC	0.01	1,363	5	13	18	1.3	SM14-Ex-EX55	
Kirkland_Main-449	Kirkland_Manholes-253	121.6	Kirkland_Manholes-254	100.7	323.7	6.46	8	PVC	0.01	1,791	41	80	122	6.8	SM14-Ex-EX40	
Kirkland_Main-450	Kirkland_Manholes-252	142.57	Kirkland_Manholes-253	121.6	327.2	6.41	8	PVC	0.01	1,785	40	76	116	6.5	SM14-Ex-EX40	
Kirkland_Main-451	Kirkland_Manholes-257	165.98	Kirkland_Manholes-252	142.57	284	8.24	8	PVC	0.01	2,024	39	67	106	5.2	SM14-Ex-EX57	
Kirkland_Main-452	Kirkland_Manholes-234	184.45	Kirkland_Manholes-257	165.98	280.4	6.59	8	PVC	0.01	1,810	28	54	82	4.5	SM14-Ex-EX57	
Kirkland_Main-453	Kirkland_Manholes-1133	181.56	Kirkland_Manholes-257	165.98	274.2	5.68	8	PVC	0.01	1,681	9	9	17	1	SM14-Ex-EX58	
Kirkland_Main-454	Kirkland_Manholes-231	144.64	Kirkland_Manholes-236	135.22	190.5	4.95	8	PVC	0.01	1,568	2	4	6	0.4	SM14-Ex-EX56	
Kirkland_Main-455	Kirkland_Manholes-235	144.29	Kirkland_Manholes-236	135.22	77.1	11.76	8	PVC	0.01	2,418	2	4	6	0.3	SM14-Ex-EX56	
Kirkland_Main-456	Kirkland_Manholes-236	135.22	Kirkland_Manholes-237	112.26	221.2	10.38	8	PVC	0.01	2,271	5	13	18	0.8	SM14-Ex-EX56	
Kirkland_Main-457	Kirkland_Manholes-232	112.59	Kirkland_Manholes-237	112.26	229.8	0.14	8	PVC	0.01	267	62	138	200	75	SM14-Ex-EX41	
Kirkland_Main-458	Kirkland_Manholes-237	112.26	Kirkland_Manholes-254	100.7	413.4	2.8	8	PVC	0.01	1,179	68	156	224	19	SM14-Ex-EX41	
Kirkland_Main-459	Kirkland_Manholes-254	100.7	Kirkland_Manholes-255	81.45	344	5.6	8	PVC	0.01	1,668	110	241	351	21.1	SM14-Ex-EX40	
Kirkland_Main-460	Kirkland_Manholes-249	98.75	Kirkland_Manholes-248	82.01	263.5	6.35	8	PVC	0.01	1,777	1	4	6	0.3	SM14-Ex-EX39	
Kirkland_Main-461	Kirkland_Manholes-255	81.45	Kirkland_Manholes-256	63.52	326.4	5.49	8	PVC	0.01	1,653	112	245	358	21.7	SM14-Ex-EX40	
Kirkland_Main-462	Kirkland_Manholes-256	63.52	Kirkland_Manholes-245	59.23	36.4	11.78	8	PVC	0.01	2,420	113	250	363	15	SM14-Ex-EX40	
Kirkland_Main-463	Kirkland_Manholes-248	82.01	Kirkland_Manholes-245	59.23	346.7	6.57	8	PVC	0.01	1,807	3	9	12	0.6	SM14-Ex-EX39	
Kirkland_Main-464	Kirkland_Manholes-245	59.23	Kirkland_Manholes-246	59.12	26.8	0.4	12	PVC	0.01	1,315	117	263	381	28.9	SM14-Ex-EX40	Drop Connection
Kirkland_Main-465	Kirkland_Manholes-247	65.14	Kirkland_Manholes-246	64.57	142.8	0.4	8	PVC	0.01	446	68	149	217	48.8	SM14-Ex-EX38	Drop Connection
Kirkland_Main-466	Kirkland_Manholes-291	21.49	Kirkland_Manholes-290	19.2	13	17.62	12	PVC	0.01	8,726	55	64	118	1.4	SM10	
Kirkland_Main-467	Kirkland_Manholes-290	19.2	ROSEPT_WETWELL	14.96	16.7	25.32	8	PVC	0.01	3,548	66	86	152	4.3	SM10	
Kirkland_Main-468	Kirkland_Manholes-289	31.71	Kirkland_Manholes-287	23.53	51	16.05	8	PVC	0.01	2,825	12	22	35	1.2	SM10	
Kirkland_Main-469	Kirkland_Manholes-288	19.33	Kirkland_Manholes-290	19.2	135.3	0.1	8	PVC	0.01	219	10	19	29	13.2	SM10	
Kirkland_Main-470	Kirkland_Manholes-287	23.53	Kirkland_Manholes-291	21.49	128.7	1.58	8	PVC	0.01	887	54	61	115	13	SM10	
Kirkland_Main-471	Kirkland_Manholes-286	24.15	Kirkland_Manholes-287	23.53	96.6	0.64	12	PVC	0.01	1,665	42	35	77	4.6	SM10	
Kirkland_Main-472	Kirkland_Manholes-285	19.59	Kirkland_Manholes-288	19.33	259.3	0.1	8	PVC	0.01	223	9	16	25	11.3	SM10	
Kirkland_Main-473	Kirkland_Manholes-292	22.37	Kirkland_Manholes-293	22.09	126.6	0.22	12	PVC	0.01	967	0	9	9	0.9	SM14-Ex-EX37	
Kirkland_Main-474	Kirkland_Manholes-297	22.86	Kirkland_Manholes-296	21.27	137.3	1.16	8	PVC	0.01	759	3	3	6	0.8	SM14-Ex-EX36	
Kirkland_Main-475	Kirkland_Manholes-296	21.27	Kirkland_Manholes-295	20.59	313.5	0.22	8	PVC	0.01	328	5	6	11	3.4	SM10	

2035 (20-year) with Proposed Improvements - Peak Hour Flow - Pipe Capacity Table

Label	Upstream Node	Upstream Invert Elevation (ft)	Downstream Node	Downstream Invert Elevation (ft)	Length (ft)	Slope (%)	Diameter (in)	Material	Manning's n	Design Capacity (gpm)	Domestic Flow (gpm)	I/I Flow (gpm)	Total Flow (gpm)	Percent Full (%)	CIP No.	Notes
Kirkland_Main-476	Kirkland_Manholes-295	20.59	Kirkland_Manholes-294	20.11	95.2	0.5	8	PVC	0.01	501	6	10	16	3.1	SM10	
Kirkland_Main-477	Kirkland_Manholes-294	20.11	Kirkland_Manholes-285	19.59	185.3	0.28	8	PVC	0.01	373	8	13	20	5.5	SM10	
Kirkland_Main-478	Kirkland_Manholes-311	21.29	Kirkland_Manholes-312	20.99	124.6	0.24	12	PVC	0.01	1,020	5	35	40	4	SM14-Ex-EX37	
Kirkland_Main-479	Kirkland_Manholes-312	20.99	Kirkland_Manholes-306	19.99	281.9	0.35	12	PVC	0.01	1,238	7	44	51	4.1	SM14-Ex-EX37	
Kirkland_Main-480	Kirkland_Manholes-362	216.81	Kirkland_Manholes-361	216.74	35.2	0.2	21	PVC	0.01	4,142	833	2,091	2,924	70.6		
Kirkland_Main-481	Kirkland_Manholes-367	213.02	Kirkland_Manholes-368	212.3	160.3	0.45	18	PVC	0.01	4,107	852	2,159	3,011	73.3		
Kirkland_Main-482	Kirkland_Manholes-368	212.3	Kirkland_Manholes-369	208.86	249.4	1.38	18	PVC	0.01	7,198	852	2,164	3,016	41.9		
Kirkland_Main-483	Kirkland_Manholes-369	208.86	Kirkland_Manholes-370	206.64	246.4	0.9	18	PVC	0.01	5,817	870	2,198	3,067	52.7		
Kirkland_Main-484	Kirkland_Manholes-371	213.58	Kirkland_Manholes-2872	207.03	240.7	2.72	8	PVC	0.01	1,163	0	4	5	0.4		
Kirkland_Main-485	Kirkland_Manholes-372	241.98	Kirkland_Manholes-373	230.9	143.8	7.71	8	PVC	0.01	1,957	1	4	5	0.3		
Kirkland_Main-486	Kirkland_Manholes-375	234.87	Kirkland_Manholes-373	230.9	271	1.46	8	PVC	0.01	853	93	262	355	41.6		
Kirkland_Main-487	Kirkland_Manholes-374	244.09	Kirkland_Manholes-375	234.87	143.4	6.43	8	PVC	0.01	1,788	1	4	5	0.3		
Kirkland_Main-488	Kirkland_Manholes-535	472.49	Kirkland_Manholes-536	466.05	355.6	1.81	8	PVC	0.01	949	4	17	21	2.3		
Kirkland_Main-489	Kirkland_Manholes-536	466.05	Kirkland_Manholes-539	454.38	292.6	3.99	8	PVC	0.01	1,408	7	21	29	2		
Kirkland_Main-490	Kirkland_Manholes-537	455.9	Kirkland_Manholes-539	454.38	190.6	0.8	8	PVC	0.01	630	1	4	6	0.9		
Kirkland_Main-491	Kirkland_Manholes-539	454.38	Kirkland_Manholes-540	453.6	170.3	0.46	8	PVC	0.01	477	16	64	80	16.8		
Kirkland_Main-492	Kirkland_Manholes-540	453.6	Kirkland_Manholes-541	450.25	325.9	1.03	8	PVC	0.01	715	18	69	86	12.1		
Kirkland_Main-493	Kirkland_Manholes-538	457.48	Kirkland_Manholes-1977	454.61	403.8	0.71	8	PVC	0.01	594	2	4	6	1		
Kirkland_Main-494	Kirkland_Manholes-596	110.91	Kirkland_Manholes-600	91.95	293.8	6.45	8	PVC	0.01	1,791	129	355	484	27	SM14-Ex-EX117	
Kirkland_Main-495	Kirkland_Manholes-598	118.14	Kirkland_Manholes-596	110.91	360.7	2	8	PVC	0.01	998	4	8	12	1.2	SM14-Ex-EX159	
Kirkland_Main-496	Kirkland_Manholes-606	111.69	Kirkland_Manholes-614	87.89	289.9	8.21	8	PVC	0.01	2,020	57	165	222	11	SM14-Ex-EX96	
Kirkland_Main-497	Kirkland_Manholes-238	85.65	Kirkland_Manholes-239	27.77	394.9	14.66	8	PVC	0.01	2,699	2	4	6	0.2		
Kirkland_Main-502	Kirkland_Manholes-200	55.31	Kirkland_Manholes-199	54.68	46	1.37	8	PVC	0.01	825	6	22	28	3.4		
Kirkland_Main-503	Kirkland_Manholes-2330	295.18	Kirkland_Manholes-263	292.03	86.5	3.64	8	PVC	0.01	1,346	40	103	143	10.6	SM14-Ex-EX252	
Kirkland_Main-504	Kirkland_Manholes-2768	263.56	Kirkland_Manholes-2769	260.32	376.9	0.86	8	PVC	0.01	654	2	4	6	0.9		
Kirkland_Main-505	Kirkland_Manholes-280	27.37	Kirkland_Manholes-286	24.15	372.8	0.86	12	PVC	0.01	1,932	39	29	68	3.5	SM10	
Kirkland_Main-509	Kirkland_Manholes-313	62.05	Kirkland_Manholes-286	24.15	229.1	16.54	8	PVC	0.01	2,868	2	3	5	0.2	SM10	
Kirkland_Main-510	Kirkland_Manholes-804	284.1	Kirkland_Manholes-319	281.98	84.4	2.51	8	PVC	0.01	1,117	12	34	46	4.1		
Kirkland_Main-511	Kirkland_Manholes-319	281.98	Kirkland_Manholes-320	278.6	79.1	4.27	8	PVC	0.01	1,458	13	39	52	3.5		
Kirkland_Main-512	Kirkland_Manholes-320	278.6	Kirkland_Manholes-321	265.74	204.3	6.3	8	PVC	0.01	1,769	14	43	57	3.2		
Kirkland_Main-513	Kirkland_Manholes-321	265.74	Kirkland_Manholes-322	263.88	72.5	2.57	8	PVC	0.01	1,129	15	47	63	5.5		
Kirkland_Main-514	Kirkland_Manholes-322	263.88	Kirkland_Manholes-323	244.99	177.9	10.62	8	PVC	0.01	2,297	28	82	110	4.8		
Kirkland_Main-515	Kirkland_Manholes-803	278.64	Kirkland_Manholes-322	263.88	141.7	10.41	8	PVC	0.01	2,275	13	30	43	1.9		
Kirkland_Main-516	Kirkland_Manholes-323	244.99	Kirkland_Manholes-324	240.21	186.2	2.57	8	PVC	0.01	1,130	29	86	115	10.2		
Kirkland_Main-517	Kirkland_Manholes-815	248.52	Kirkland_Manholes-324	240.21	137.2	6.05	8	PVC	0.01	1,735	9	21	30	1.7		
Kirkland_Main-518	Kirkland_Manholes-324	240.21	Kirkland_Manholes-325	236.62	39.9	9.01	8	PVC	0.01	2,116	39	112	150	7.1		
Kirkland_Main-519	Kirkland_Manholes-325	236.62	Kirkland_Manholes-327	230.43	89	6.95	8	PVC	0.01	1,859	40	120	160	8.6		
Kirkland_Main-520	Kirkland_Manholes-326	238.6	Kirkland_Manholes-325	236.62	142.9	1.39	8	PVC	0.01	830	1	4	5	0.6		
Kirkland_Main-521	Kirkland_Manholes-327	230.43	Kirkland_Manholes-328	228.68	117.4	1.49	8	PVC	0.01	861	41	124	165	19.2		
Kirkland_Main-522	Kirkland_Manholes-328	228.68	Kirkland_Manholes-329	227.48	172.3	0.7	8	PVC	0.01	588	42	129	171	29		
Kirkland_Main-523	Kirkland_Manholes-329	227.48	Kirkland_Manholes-814	224.81	265.5	1.01	8	PVC	0.01	707	44	133	177	25		
Kirkland_Main-524	Kirkland_Manholes-335	225.11	Kirkland_Manholes-330	224.74	400.7	0.09	24	PVC	0.01	4,011	762	1,850	2,612	65.1	SM14-2021-DF4	
Kirkland_Main-525	Kirkland_Manholes-330	224.74	Kirkland_Manholes-331	223	199.5	0.87	21	PVC	0.01	8,635	762	1,854	2,617	30.3		
Kirkland_Main-526	Kirkland_Manholes-331	223	Kirkland_Manholes-332	219.57	217.5	1.58	21	PVC	0.01	11,610	763	1,859	2,621	22.6		
Kirkland_Main-527	Kirkland_Manholes-332	219.57	Kirkland_Manholes-334	218.68	182	0.49	21	PVC	0.01	6,464	764	1,863	2,627	40.6		
Kirkland_Main-528	Kirkland_Manholes-333	225.59	Kirkland_Manholes-334	218.68	199.5	3.46	8	PVC	0.01	1,312	61	197	258	19.7		
Kirkland_Main-529	Kirkland_Manholes-352	234.2	Kirkland_Manholes-333	225.59	382.7	2.25	8	PVC	0.01	1,058	59	193	252	23.8		
Kirkland_Main-530	Kirkland_Manholes-334	218.68	Kirkland_Manholes-356	218.57	161	0.07	30	PVC	0.01	6,255	828	2,069	2,897	46.3	SM14-Ex-EX48	
Kirkland_Main-531	Kirkland_Manholes-337	291.09	Kirkland_Manholes-338	268.5	343.3	6.58	8	PVC	0.01	1,809	23	69	91	5		
Kirkland_Main-532	Kirkland_Manholes-343	274.46	Kirkland_Manholes-338	268.5	356.6	1.67	8	PVC	0.01	912	2	4	6	0.7		
Kirkland_Main-533	Kirkland_Manholes-338	268.5	Kirkland_Manholes-339	249.19	361.1	5.35	8	PVC	0.01	1,631	27	77	104	6.4		
Kirkland_Main-534	Kirkland_Manholes-1543	289	Kirkland_Manholes-1544	284.46	416.8	1.09	8	PVC	0.01	736	10	21	31	4.3	SM14-Ex-EX123	
Kirkland_Main-535	Kirkland_Manholes-1545	272.4	Kirkland_Manholes-765	257.59	249.5	5.94	8	PVC	0.01	1,718	25	73	98	5.7	SM14-Ex-EX121	
Kirkland_Main-536	Kirkland_Manholes-1571	242.76	Kirkland_Manholes-1572	242.19	318.3	0.18	15	PVC	0.01	1,595	262	481	742	46.5		
Kirkland_Main-537	Kirkland_Manholes-1573	242.13	Kirkland_Manholes-1574	241.8	67.8	0.49	18	PVC	0.01	4,277	262	489	752	17.6	SM14-Ex-EX133	
Kirkland_Main-538	Kirkland_Manholes-1572	242.19	Kirkland_Manholes-1573	242.13	243.5	0.02	18	PVC	0.01	962	262	485	747	77.6	SM14-Ex-EX133	
Kirkland_Main-539	Kirkland_Manholes-1576	330.99	Kirkland_Manholes-1575	314.42	250.6	6.61	8	PVC	0.01	1,813	7	30	37	2		
Kirkland_Main-540	Kirkland_Manholes-1577	341.43	Kirkland_Manholes-1576	330.99	181.7	5.75	8	PVC	0.01	1,690	6	26	32	1.9		
Kirkland_Main-541	Kirkland_Manholes-1578	344.66	Kirkland_Manholes-1577	341.43	47.3	6.83	8	PVC	0.01	1,843	1	4	5	0.3		
Kirkland_Main-542	Kirkland_Manholes-1579	359.44	Kirkland_Manholes-1580	335.19	206.7	11.73	12	PVC	0.01	7,121	269	652	922	12.9	SM14-Ex-EX205	
Kirkland_Main-543	Kirkland_Manholes-1580	335.19	Kirkland_Manholes-1581	324.95	171.4	5.98	12	PVC	0.01	5,081	270	657	926	18.2	SM14-Ex-EX205	
Kirkland_Main-544	Kirkland_Manholes-1582	332.21	Kirkland_Manholes-1581	324.95	160.1	4.53	12	PVC	0.01	4,426	70	206	276	6.2	SM14-Ex-EX206	

2035 (20-year) with Proposed Improvements - Peak Hour Flow - Pipe Capacity Table

Label	Upstream Node	Upstream Invert Elevation (ft)	Downstream Node	Downstream Invert Elevation (ft)	Length (ft)	Slope (%)	Diameter (in)	Material	Manning's n	Design Capacity (gpm)	Domestic Flow (gpm)	I/I Flow (gpm)	Total Flow (gpm)	Percent Full (%)	CIP No.	Notes
Kirkland_Main-545	Kirkland_Manholes-1581	324.95	Kirkland_Manholes-1623	294.92	398.1	7.54	12	PVC	0.01	5,709	340	867	1,207	21.1	SM14-Ex-EX205	
Kirkland_Main-546	Kirkland_Manholes-2681	334.86	Kirkland_Manholes-3028	332.75	289	0.73	12	PVC	0.01	1,776	62	185	246	13.9	SM14-Ex-EX206	
Kirkland_Main-547	Kirkland_Manholes-1583	333.82	Kirkland_Manholes-1582	332.21	16.6	9.69	8	PVC	0.01	2,195	3	9	12	0.5		
Kirkland_Main-548	Kirkland_Manholes-1584	346.72	Kirkland_Manholes-1583	333.82	203.1	6.35	8	PVC	0.01	1,777	3	4	7	0.4		
Kirkland_Main-549	Kirkland_Manholes-1575	314.42	Kirkland_Manholes-1953	290.71	326.1	7.27	8	PVC	0.01	1,901	7	34	41	2.2		
Kirkland_Main-550	Kirkland_Manholes-1150	151.79	Kirkland_Manholes-1151	143.36	156.6	5.38	8	PVC	0.01	1,636	18	58	76	4.6	SM10	
Kirkland_Main-551	Kirkland_Manholes-1151	143.36	Kirkland_Manholes-1152	135.47	158.3	4.98	8	PVC	0.01	1,574	20	66	86	5.5	SM10	
Kirkland_Main-552	Kirkland_Manholes-1170	153.9	Kirkland_Manholes-1150	151.79	249.2	0.85	8	PVC	0.01	649	2	8	11	1.6	SM10	
Kirkland_Main-553	Kirkland_Manholes-306	19.99	Kirkland_Manholes-1183	19.89	217.6	0.05	12	PVC	0.01	446	34	159	193	43.3	SM14-Ex-EX37	
Kirkland_Main-554	Kirkland_Manholes-304	75.98	Kirkland_Manholes-303	75.38	34.2	1.76	8	PVC	0.01	934	19	62	81	8.7	SM10	
Kirkland_Main-555	Kirkland_Manholes-303	75.38	Kirkland_Manholes-305	74.69	171.5	0.4	8	PVC	0.01	447	19	71	90	20.1	SM10	
Kirkland_Main-556	Kirkland_Manholes-302	78.72	Kirkland_Manholes-304	75.98	177.4	1.54	8	PVC	0.01	876	18	53	71	8.1	SM10	
Kirkland_Main-557	Kirkland_Manholes-307	105.6	Kirkland_Manholes-302	78.72	385.1	6.98	8	PVC	0.01	1,863	17	44	61	3.3	SM10	
Kirkland_Main-558	Kirkland_Manholes-301	74.29	Kirkland_Manholes-300	70.39	326.3	1.2	8	PVC	0.01	771	3	3	6	0.8	SM10	
Kirkland_Main-559	Kirkland_Manholes-1316	272.4	Kirkland_Manholes-1317	271.64	47	1.62	8	PVC	0.01	896	3	13	16	1.7		
Kirkland_Main-563	Kirkland_Manholes-300	70.39	Kirkland_Manholes-299	66.63	324	1.16	8	PVC	0.01	760	7	6	13	1.7	SM10	
Kirkland_Main-564	Kirkland_Manholes-388	297.69	Kirkland_Manholes-389	295.78	310.4	0.62	8	PVC	0.01	553	10	21	32	5.7	SM14-Ex-EX33	
Kirkland_Main-565	Kirkland_Manholes-390	304.37	Kirkland_Manholes-391	302.9	200.9	0.73	8	PVC	0.01	603	2	4	6	1	SM14-Ex-EX34	
Kirkland_Main-566	Kirkland_Manholes-392	305	Kirkland_Manholes-391	302.9	116.9	1.8	8	PVC	0.01	945	45	129	174	18.4	SM14-Ex-EX50	
Kirkland_Main-567	Kirkland_Manholes-2568	299.24	Kirkland_Manholes-2592	294.57	199	2.35	8	PVC	0.01	1,080	2	4	6	0.6	SM14-Ex-EX306	
Kirkland_Main-568	Kirkland_Manholes-2571	325.07	Kirkland_Manholes-2570	299.81	188.9	13.37	8	PVC	0.01	2,578	2	4	6	0.2		
Kirkland_Main-569	Kirkland_Manholes-2602	234.19	Kirkland_Manholes-2601	228.74	344.4	1.58	8	PVC	0.01	887	4	13	17	1.9	SM14-Ex-EX300	
Kirkland_Main-570	Kirkland_Manholes-2603	296.02	Kirkland_Manholes-2588	292.14	272.1	1.43	8	PVC	0.01	842	14	26	40	4.7	SM14-Ex-EX304	
Kirkland_Main-573	Kirkland_Manholes-2610	205.21	Kirkland_Manholes-2609	193.8	79.9	14.28	8	PVC	0.01	2,664	1	4	5	0.2		
Kirkland_Main-574	Kirkland_Manholes-1380	448.63	Kirkland_Manholes-1386	447.82	272.6	0.3	8	PVC	0.01	384	8	9	16	4.3	SM14-Ex-EX219	
Kirkland_Main-575	Kirkland_Manholes-1383	449.36	Kirkland_Manholes-1380	448.63	231	0.32	8	PVC	0.01	396	5	4	9	2.3	SM14-Ex-EX219	
Kirkland_Main-576	Kirkland_Manholes-1381	441.1	Kirkland_Manholes-1382	428.64	320.7	3.88	8	PVC	0.01	1,390	2	4	6	0.4		
Kirkland_Main-577	Kirkland_Manholes-1384	452.11	Kirkland_Manholes-1385	450.86	206.1	0.61	8	PVC	0.01	549	2	4	6	1.1		
Kirkland_Main-578	Kirkland_Manholes-1385	450.86	Kirkland_Manholes-1386	447.82	69.1	4.4	8	PVC	0.01	1,479	3	9	12	0.8		
Kirkland_Main-579	Kirkland_Manholes-1386	447.82	Kirkland_Manholes-1387	446.83	200.1	0.49	8	PVC	0.01	496	12	21	33	6.7	SM14-Ex-EX219	
Kirkland_Main-580	Kirkland_Manholes-1387	446.83	Kirkland_Manholes-1388	445.49	260.4	0.51	8	PVC	0.01	506	42	103	145	28.7	SM14-Ex-EX219	
Kirkland_Main-581	Kirkland_Manholes-1388	445.49	Kirkland_Manholes-1389	444.08	265.9	0.53	8	PVC	0.01	513	44	107	151	29.5	SM14-Ex-EX219	
Kirkland_Main-582	Kirkland_Manholes-1390	457.46	Kirkland_Manholes-1389	444.08	260.4	5.14	8	PVC	0.01	1,598	10	26	36	2.2	SM14-Ex-EX218	
Kirkland_Main-583	Kirkland_Manholes-1389	444.08	Kirkland_Manholes-532	443.04	161.2	0.65	8	PVC	0.01	566	56	137	193	34.2	SM14-Ex-EX218	
Kirkland_Main-584	Kirkland_Manholes-532	443.04	Kirkland_Manholes-533	442.23	169.5	0.48	8	PVC	0.01	487	60	142	202	41.5	SM14-Ex-EX218	
Kirkland_Main-585	Kirkland_Manholes-533	442.23	Kirkland_Manholes-534	432.55	269	3.6	8	PVC	0.01	1,337	63	146	209	15.6	SM14-Ex-EX218	
Kirkland_Main-586	Kirkland_Manholes-530	464.47	Kirkland_Manholes-1390	457.46	207.2	3.38	8	PVC	0.01	1,297	9	21	30	2.3	SM14-Ex-EX218	
Kirkland_Main-587	Kirkland_Manholes-1391	471.35	Kirkland_Manholes-530	464.47	201.7	3.41	8	PVC	0.01	1,302	4	13	17	1.3	SM14-Ex-EX218	
Kirkland_Main-588	Kirkland_Manholes-543	448.24	Kirkland_Manholes-1387	446.83	163.4	0.86	8	PVC	0.01	655	30	77	107	16.3		
Kirkland_Main-589	Kirkland_Manholes-531	468.8	Kirkland_Manholes-530	464.47	218	1.99	8	PVC	0.01	994	2	4	6	0.6		
Kirkland_Main-590	Kirkland_Manholes-339	249.19	Kirkland_Manholes-340	235.81	214	6.25	8	PVC	0.01	1,763	28	82	110	6.2		
Kirkland_Main-592	Kirkland_Manholes-2009	426.97	Kirkland_Manholes-2010	424.43	206.3	1.23	8	PVC	0.01	782	22	56	78	10		
Kirkland_Main-593	Kirkland_Manholes-2011	417.75	Kirkland_Manholes-2012	406.67	363.8	3.05	8	PVC	0.01	1,230	4	9	12	1		
Kirkland_Main-594	Kirkland_Manholes-1989	447.97	Kirkland_Manholes-1990	439.8	245.1	3.33	8	PVC	0.01	1,287	3	9	12	0.9		
Kirkland_Main-595	Kirkland_Manholes-1990	439.8	Kirkland_Manholes-1991	431.18	131.7	6.55	8	PVC	0.01	1,804	11	30	41	2.3		
Kirkland_Main-596	Kirkland_Manholes-556	457.9	Kirkland_Manholes-3007	456.9	222.1	0.45	8	PVC	0.01	473	1	4	6	1.2		
Kirkland_Main-597	Kirkland_Manholes-2495	184.35	Kirkland_Manholes-2494	170.93	403.6	3.33	8	PVC	0.01	1,286	15	21	36	2.8	SM14-Ex-EX236	
Kirkland_Main-598	Kirkland_Manholes-2496	191.57	Kirkland_Manholes-2495	184.35	278.9	2.59	8	PVC	0.01	1,134	12	17	30	2.6	SM14-Ex-EX236	
Kirkland_Main-599	Kirkland_Manholes-2497	194.88	Kirkland_Manholes-2498	194.29	45.2	1.3	8	PVC	0.01	805	10	9	19	2.3	SM14-Ex-EX236	
Kirkland_Main-600	Kirkland_Manholes-2498	194.29	Kirkland_Manholes-2496	191.57	77.4	3.51	8	PVC	0.01	1,322	11	13	24	1.8	SM14-Ex-EX236	
Kirkland_Main-601	Kirkland_Manholes-2237	143.38	Kirkland_Manholes-2499	140.38	322.1	0.93	8	PVC	0.01	680	5	6	11	1.7	SM14-Ex-EX225	
Kirkland_Main-602	Kirkland_Manholes-2499	140.38	Kirkland_Manholes-2500	122.66	273.4	6.48	8	PVC	0.01	1,795	8	12	21	1.1	SM14-Ex-EX225	
Kirkland_Main-603	Kirkland_Manholes-2500	122.66	Kirkland_Manholes-2501	104.86	254.1	7.01	8	PVC	0.01	1,866	11	19	29	1.6	SM14-Ex-EX225	
Kirkland_Main-604	Kirkland_Manholes-2501	104.86	Kirkland_Manholes-2502	102.46	257.9	0.93	8	PVC	0.01	680	14	25	39	5.7	SM14-Ex-EX225	
Kirkland_Main-605	Kirkland_Manholes-2502	102.46	Kirkland_Manholes-2503	101.49	223.5	0.43	8	PVC	0.01	464	20	31	51	10.9	SM14-Ex-EX225	
Kirkland_Main-606	Kirkland_Manholes-2504	121.59	Kirkland_Manholes-2503	101.49	254	7.91	8	PVC	0.01	1,983	8	12	20	1	SM14-Ex-EX223	
Kirkland_Main-607	Kirkland_Manholes-2503	101.49	Kirkland_Manholes-2507	88.29	256.5	5.15	8	PVC	0.01	1,599	30	50	79	5	SM14-Ex-EX223	
Kirkland_Main-608	Kirkland_Manholes-2505	125.11	Kirkland_Manholes-2504	121.59	387.3	0.91	8	PVC	0.01	672	4	6	10	1.5	SM14-Ex-EX223	
Kirkland_Main-609	Kirkland_Manholes-2763	13.15	Kirkland_Manholes-2762	13.1	227.4	0.02	36	PVC	0.01	5,771	687	1,622	2,610	45.2	SM14-Ex-EX10	
Kirkland_Main-610	Kirkland_Manholes-2238	92.13	Kirkland_Manholes-2118	82.91	342.6	2.69	8	PVC	0.01	1,157	7	12	20	1.7	SM14-Ex-EX224	
Kirkland_Main-611	Kirkland_Manholes-2118	82.91	Kirkland_Manholes-2146	75.22	210	3.66	8	PVC	0.01	1,349	45	81	126	9.3	SM14-Ex-EX223	
Kirkland_Main-612	Kirkland_Manholes-2506	86.22	Kirkland_Manholes-2118	82.91	249.1	1.33	8	PVC	0.01	813	35	62	97	11.9	SM14-Ex-EX223	

2035 (20-year) with Proposed Improvements - Peak Hour Flow - Pipe Capacity Table

Label	Upstream Node	Upstream Invert Elevation (ft)	Downstream Node	Downstream Invert Elevation (ft)	Length (ft)	Slope (%)	Diameter (in)	Material	Manning's n	Design Capacity (gpm)	Domestic Flow (gpm)	I/I Flow (gpm)	Total Flow (gpm)	Percent Full (%)	CIP No.	Notes
Kirkland_Main-613	Kirkland_Manholes-2507	88.29	Kirkland_Manholes-2506	86.22	236.4	0.88	8	PVC	0.01	660	32	56	88	13.3	SM14-Ex-EX223	
Kirkland_Main-614	Kirkland_Manholes-2508	120.01	Kirkland_Manholes-2510	102.3	301.7	5.87	8	PVC	0.01	1,708	8	19	27	1.6	SM14-Ex-EX229	
Kirkland_Main-615	Kirkland_Manholes-2144	65.5	Kirkland_Manholes-2143	61.9	34.5	10.44	8	PVC	0.01	2,279	80	83	163	7.2		
Kirkland_Main-616	Kirkland_Manholes-2145	63.1	Kirkland_Manholes-2143	61.9	31.4	3.82	8	PVC	0.01	1,377	9	50	59	4.2		
Kirkland_Main-618	Kirkland_Manholes-2170	148.68	Kirkland_Manholes-2169	142.85	119.8	4.87	8	PVC	0.01	1,555	1	8	10	0.6	SM14-Ex-EX193	
Kirkland_Main-622	Kirkland_Manholes-2167	120.69	Kirkland_Manholes-2166	108.92	118.4	9.94	8	PVC	0.01	2,223	6	33	39	1.7	SM14-Ex-EX193	
Kirkland_Main-623	Kirkland_Manholes-2166	108.92	Kirkland_Manholes-2165	94.99	230.8	6.04	8	PVC	0.01	1,732	10	41	51	3	SM14-Ex-EX193	
Kirkland_Main-626	Kirkland_Manholes-2719	31.99	Kirkland_Manholes-2715	29.78	252.5	0.88	8	PVC	0.01	660	86	12	98	14.9		
Kirkland_Main-627	Kirkland_Manholes-2278	406.74	Kirkland_Manholes-2271	405.49	96	1.3	8	PVC	0.01	805	4	17	21	2.6		
Kirkland_Main-630	Kirkland_Manholes-2407	403.31	Kirkland_Manholes-2268	401.9	163.6	0.86	8	PVC	0.01	655	18	52	69	10.6	SM14-Ex-EX261	
Kirkland_Main-631	Kirkland_Manholes-2266	392.8	Kirkland_Manholes-2265	392	110.1	0.73	8	PVC	0.01	601	36	133	169	28.1	SM14-Ex-EX212	
Kirkland_Main-632	Kirkland_Manholes-2265	392	Kirkland_Manholes-2263	374.13	447.5	3.99	8	PVC	0.01	1,409	36	137	174	12.3	SM14-Ex-EX212	
Kirkland_Main-633	Kirkland_Manholes-2245	234.09	Kirkland_Manholes-2074	213.49	327.6	6.29	8	PVC	0.01	1,768	53	52	104	5.9	SM14-Ex-EX246	
Kirkland_Main-634	Kirkland_Manholes-2253	239.74	Kirkland_Manholes-2252	236.86	193.1	1.49	8	PVC	0.01	861	36	13	49	5.6	SM14-Ex-EX247	
Kirkland_Main-635	Kirkland_Manholes-2252	236.86	Kirkland_Manholes-2245	234.09	241.6	1.15	8	PVC	0.01	755	41	17	58	7.7	SM14-Ex-EX247	
Kirkland_Main-636	Kirkland_Manholes-2246	246.17	Kirkland_Manholes-2245	234.09	185.5	6.51	8	PVC	0.01	1,799	9	26	34	1.9	SM14-Ex-EX246	
Kirkland_Main-637	Kirkland_Manholes-2247	249.9	Kirkland_Manholes-2246	246.17	310.7	1.2	8	PVC	0.01	773	6	21	28	3.6	SM14-Ex-EX246	
Kirkland_Main-638	Kirkland_Manholes-2251	257.04	Kirkland_Manholes-2247	249.9	237.7	3	8	PVC	0.01	1,222	0	4	5	0.4	SM14-Ex-EX246	
Kirkland_Main-639	Kirkland_Manholes-2248	259.41	Kirkland_Manholes-2247	249.9	197.8	4.81	8	PVC	0.01	1,546	5	13	18	1.1		
Kirkland_Main-640	Kirkland_Manholes-2249	263.29	Kirkland_Manholes-2248	259.41	137.3	2.82	8	PVC	0.01	1,185	5	9	13	1.1		
Kirkland_Main-641	Kirkland_Manholes-2250	275.69	Kirkland_Manholes-2249	263.29	113.4	10.94	8	PVC	0.01	2,332	4	4	9	0.4		
Kirkland_Main-642	Kirkland_Manholes-2261	305.59	Kirkland_Manholes-2260	285.07	409.2	5.01	12	PVC	0.01	4,655	393	919	1,311	28.2	SM14-Ex-EX248	
Kirkland_Main-643	Kirkland_Manholes-2262	311.78	Kirkland_Manholes-2261	305.59	133.8	4.62	12	PVC	0.01	4,470	390	914	1,304	29.2	SM14-Ex-EX248	
Kirkland_Main-644	Kirkland_Manholes-21	62.08	Kirkland_Manholes-101	61.95	7	1.85	8	PVC	0.01	960	10	31	42	4.3		
Kirkland_Main-645	Kirkland_Manholes-3038	279.17	Kirkland_Manholes-3039	278.83	84.7	0.4	8	PVC	0.01	446	2	4	6	1.4		
Kirkland_Main-646	Kirkland_Manholes-3039	278.83	Kirkland_Manholes-3035	266.43	233.8	5.3	8	PVC	0.01	1,624	4	9	12	0.8		
Kirkland_Main-647	Kirkland_Manholes-3037	277.97	Kirkland_Manholes-3036	268.75	180.1	5.12	8	PVC	0.01	1,595	2	4	6	0.4		
Kirkland_Main-648	Kirkland_Manholes-3036	268.75	Kirkland_Manholes-3035	266.43	62.1	3.74	8	PVC	0.01	1,363	3	9	11	0.8		
Kirkland_Main-649	Kirkland_Manholes-1505	267	Kirkland_Manholes-3035	266.43	67.6	0.84	8	PVC	0.01	647	32	94	127	19.6		
Kirkland_Main-650	Kirkland_Manholes-3040	208.06	Kirkland_Manholes-3041	198.95	98.1	9.29	8	PVC	0.01	2,148	7	4	11	0.5		
Kirkland_Main-651	Kirkland_Manholes-3041	198.95	Kirkland_Manholes-1602	196.74	179.4	1.23	8	PVC	0.01	782	9	9	18	2.3		
Kirkland_Main-652	Kirkland_Manholes-3100	18.3	Kirkland_Manholes-3044	18.06	60.9	0.39	18	PVC	0.01	3,847	112	68	180	4.7	SM14-Ex-EX289	
Kirkland_Main-653	Kirkland_Manholes-566	483.97	Kirkland_Manholes-3045	483.35	154.3	0.4	8	PVC	0.01	446	2	4	6	1.3		
Kirkland_Main-655	Kirkland_Manholes-3046	250.83	Kirkland_Manholes-3047	250.39	298.9	0.15	8	PVC	0.01	271	2	4	7	2.5		
Kirkland_Main-656	Kirkland_Manholes-3047	250.39	Kirkland_Manholes-396	249.55	18.8	4.48	8	PVC	0.01	1,492	4	9	13	0.9		
Kirkland_Main-657	Kirkland_Manholes-3048	215.92	Kirkland_Manholes-364	215.51	48.9	0.84	21	PVC	0.01	8,463	844	2,125	2,969	35.1		
Kirkland_Main-658	Kirkland_Manholes-3051	246.2	Kirkland_Manholes-3050	235.83	120.9	8.58	8	PVC	0.01	2,065	1	4	5	0.3		
Kirkland_Main-659	Kirkland_Manholes-3050	235.83	Kirkland_Manholes-3049	221.64	223.5	6.35	8	PVC	0.01	1,776	2	9	11	0.6		
Kirkland_Main-660	Kirkland_Manholes-3049	221.64	Kirkland_Manholes-3048	215.92	33.6	17.02	8	PVC	0.01	2,909	3	13	16	0.6		
Kirkland_Main-661	Kirkland_Manholes-3054	230.52	Kirkland_Manholes-3053	227.56	179.1	1.65	8	PVC	0.01	906	2	4	7	0.7		
Kirkland_Main-662	Kirkland_Manholes-3052	228.3	Kirkland_Manholes-3053	227.56	79.8	0.93	8	PVC	0.01	679	1	4	5	0.8		
Kirkland_Main-663	Kirkland_Manholes-3053	227.56	Kirkland_Manholes-3055	218.26	198.6	4.68	8	PVC	0.01	1,526	4	13	17	1.1		
Kirkland_Main-664	Kirkland_Manholes-3055	218.26	Kirkland_Manholes-364	215.51	19.7	13.95	8	PVC	0.01	2,634	5	17	22	0.8		
Kirkland_Main-665	Kirkland_Manholes-3058	393.03	Kirkland_Manholes-3057	384.71	254	3.28	8	PVC	0.01	1,276	2	4	6	0.5		
Kirkland_Main-666	Kirkland_Manholes-3057	384.71	Kirkland_Manholes-3056	382.54	53.8	4.03	8	PVC	0.01	1,415	3	9	12	0.8		
Kirkland_Main-667	Kirkland_Manholes-3056	382.54	Kirkland_Manholes-3016	372.66	250.2	3.95	8	PVC	0.01	1,401	5	13	18	1.3		
Kirkland_Main-668	Kirkland_Manholes-3062	383.23	Kirkland_Manholes-3063	372.82	282.2	3.69	8	PVC	0.01	1,354	1	4	5	0.4		
Kirkland_Main-669	Kirkland_Manholes-3063	372.82	Kirkland_Manholes-3061	361.76	319.4	3.46	8	PVC	0.01	1,312	2	9	10	0.8		
Kirkland_Main-670	Kirkland_Manholes-3061	361.76	Kirkland_Manholes-3060	360.51	136.8	0.91	8	PVC	0.01	674	2	13	15	2.2		
Kirkland_Main-671	Kirkland_Manholes-3059	374.97	Kirkland_Manholes-3060	371.3	316.1	1.16	8	PVC	0.01	760	1	4	6	0.7		Drop Connection
Kirkland_Main-672	Kirkland_Manholes-3060	360.51	Kirkland_Manholes-3064	358.68	232.8	0.79	8	PVC	0.01	625	6	21	28	4.4		
Kirkland_Main-673	Kirkland_Manholes-3064	358.68	Kirkland_Manholes-3065	358.3	94.6	0.4	8	PVC	0.01	446	7	26	32	7.3		
Kirkland_Main-674	Kirkland_Manholes-3065	358.3	Kirkland_Manholes-3066	356.12	87.4	2.49	8	PVC	0.01	1,113	8	30	38	3.4		
Kirkland_Main-675	Kirkland_Manholes-3066	356.12	Kirkland_Manholes-3067	344.94	288.6	3.87	8	PVC	0.01	1,388	11	34	45	3.3		
Kirkland_Main-676	Kirkland_Manholes-3067	344.94	Kirkland_Manholes-3068	332.11	210.6	6.09	8	PVC	0.01	1,740	11	39	50	2.9		
Kirkland_Main-677	Kirkland_Manholes-3068	332.11	Kirkland_Manholes-3069	304.52	266.1	10.37	8	PVC	0.01	2,270	12	43	55	2.4		
Kirkland_Main-678	Kirkland_Manholes-3069	304.52	Kirkland_Manholes-926	302.74	43.6	4.09	8	PVC	0.01	1,425	12	47	60	4.2		
Kirkland_Main-679	Kirkland_Manholes-299	66.63	Kirkland_Manholes-298	56.65	96.2	10.37	8	PVC	0.01	2,271	11	16	27	1.2	SM10	
Kirkland_Main-680	Kirkland_Manholes-298	56.65	Kirkland_Manholes-289	31.71	154.4	16.15	8	PVC	0.01	2,834	12	19	31	1.1	SM10	
Kirkland_Main-681	Kirkland_Manholes-281	36.84	Kirkland_Manholes-280	27.37	236.3	4.01	8	PVC	0.01	1,411	3	13	15	1.1	SM10	
Kirkland_Main-682	Kirkland_Manholes-752	265.45	Kirkland_Manholes-1559	253.89	158.5	7.29	8	PVC	0.01	1,904	28	64	92	4.8	SM14-Ex-EX68	
Kirkland_Main-683	Kirkland_Manholes-1561	229.17	Kirkland_Manholes-1562	206.57	130	17.39	8	PVC	0.01	2,940	1	4	6	0.2		

2035 (20-year) with Proposed Improvements - Peak Hour Flow - Pipe Capacity Table

Label	Upstream Node	Upstream Invert Elevation (ft)	Downstream Node	Downstream Invert Elevation (ft)	Length (ft)	Slope (%)	Diameter (in)	Material	Manning's n	Design Capacity (gpm)	Domestic Flow (gpm)	I/I Flow (gpm)	Total Flow (gpm)	Percent Full (%)	CIP No.	Notes
Kirkland_Main-684	Kirkland_Manholes-1563	203.28	Kirkland_Manholes-1564	164.37	189.8	20.5	8	PVC	0.01	3,192	2	13	15	0.5		
Kirkland_Main-685	Kirkland_Manholes-1347	427.05	Kirkland_Manholes-1349	426.8	216.3	0.12	8	PVC	0.01	240	8	17	25	10.3		
Kirkland_Main-686	Kirkland_Manholes-1349	426.8	Kirkland_Manholes-1348	423.36	47.3	7.28	8	PVC	0.01	1,902	9	21	30	1.6		
Kirkland_Main-687	Kirkland_Manholes-1348	423.36	Kirkland_Manholes-1354	421.4	318.8	0.61	8	PVC	0.01	553	10	26	36	6.5		
Kirkland_Main-688	Kirkland_Manholes-1352	406.36	Kirkland_Manholes-1903	399.77	227.2	2.9	8	PVC	0.01	1,201	2	4	6	0.5		
Kirkland_Main-689	Kirkland_Manholes-1353	422.52	Kirkland_Manholes-1354	421.4	133.4	0.84	8	PVC	0.01	646	3	4	7	1.1		
Kirkland_Main-690	Kirkland_Manholes-1354	421.4	Kirkland_Manholes-1355	420.81	87.2	0.68	8	PVC	0.01	580	14	34	48	8.2		
Kirkland_Main-691	Kirkland_Manholes-832	339.26	Kirkland_Manholes-794	336.64	92.4	2.84	8	PVC	0.01	1,188	4	13	17	1.4		
Kirkland_Main-692	Kirkland_Manholes-794	336.64	Kirkland_Manholes-795	330.76	102.1	5.76	8	PVC	0.01	1,692	5	17	22	1.3		
Kirkland_Main-693	Kirkland_Manholes-795	330.76	Kirkland_Manholes-796	329.52	188.4	0.66	8	PVC	0.01	572	6	21	27	4.8		
Kirkland_Main-694	Kirkland_Manholes-833	205	Kirkland_Manholes-830	198.45	115.6	5.67	8	PVC	0.01	1,678	2	4	6	0.4		
Kirkland_Main-695	Kirkland_Manholes-1212	307.51	Kirkland_Manholes-1213	300.54	162.4	4.29	6	Concrete	0.013	522	69	21	90	17.3		
Kirkland_Main-696	Kirkland_Manholes-1213	300.54	Kirkland_Manholes-2616	274.02	226.7	11.7	6	Concrete	0.013	861	69	26	95	11		
Kirkland_Main-697	Kirkland_Manholes-515	18.45	Kirkland_Manholes-514	18.19	122.3	0.21	12	PVC	0.01	953	38	203	241	25.3	SM14-Ex-EX37	
Kirkland_Main-698	Kirkland_Manholes-1186	18.89	Kirkland_Manholes-515	18.45	232.7	0.19	12	PVC	0.01	907	37	195	232	25.6	SM14-Ex-EX37	
Kirkland_Main-699	Kirkland_Manholes-1185	19.29	Kirkland_Manholes-1186	18.89	267.9	0.15	12	PVC	0.01	803	36	186	222	27.6	SM14-Ex-EX37	
Kirkland_Main-700	Kirkland_Manholes-2510	102.3	Kirkland_Manholes-2511	85.9	155.2	10.57	8	PVC	0.01	2,292	11	25	36	1.6	SM14-Ex-EX229	
Kirkland_Main-701	Kirkland_Manholes-2512	90.74	Kirkland_Manholes-2511	85.9	110.5	4.38	8	PVC	0.01	1,475	5	12	17	1.1	SM14-Ex-EX228	
Kirkland_Main-703	Kirkland_Manholes-2513	104.61	Kirkland_Manholes-2512	90.74	161.7	8.58	8	PVC	0.01	2,065	3	6	9	0.5	SM14-Ex-EX228	
Kirkland_Main-704	Kirkland_Manholes-1988	449.74	Kirkland_Manholes-1989	447.97	257	0.69	8	PVC	0.01	585	1	4	6	1		
Kirkland_Main-705	Kirkland_Manholes-2008	435.7	Kirkland_Manholes-1993	435.41	162.8	0.18	8	PVC	0.01	298	9	17	26	8.7		
Kirkland_Main-706	Kirkland_Manholes-2060	437.6	Kirkland_Manholes-2008	435.7	259.6	0.73	8	PVC	0.01	603	4	4	8	1.3		
Kirkland_Main-707	Kirkland_Manholes-1993	435.41	Kirkland_Manholes-2061	434.9	121.2	0.42	8	PVC	0.01	457	9	21	31	6.7		
Kirkland_Main-708	Kirkland_Manholes-2061	434.9	Kirkland_Manholes-1994	434.42	35	1.37	8	PVC	0.01	826	10	26	36	4.3		
Kirkland_Main-709	Kirkland_Manholes-1994	434.42	Kirkland_Manholes-1995	433.71	121.9	0.58	8	PVC	0.01	538	11	30	41	7.6		
Kirkland_Main-710	Kirkland_Manholes-1995	433.71	Kirkland_Manholes-1996	432.86	110.9	0.77	8	PVC	0.01	617	14	39	52	8.5		
Kirkland_Main-711	Kirkland_Manholes-1996	432.86	Kirkland_Manholes-1997	432.14	299.5	0.24	8	PVC	0.01	346	15	43	57	16.6		
Kirkland_Main-712	Kirkland_Manholes-1998	432.54	Kirkland_Manholes-1997	432.14	196.8	0.2	8	PVC	0.01	318	2	4	6	1.9	SM14-Ex-EX211	
Kirkland_Main-713	Kirkland_Manholes-1997	432.14	Kirkland_Manholes-1999	430.91	331.2	0.37	8	PVC	0.01	430	19	52	70	16.4	SM14-Ex-EX211	
Kirkland_Main-714	Kirkland_Manholes-2062	435.63	Kirkland_Manholes-1995	433.71	265.8	0.72	8	PVC	0.01	599	2	4	6	1.1		
Kirkland_Main-717	Kirkland_Manholes-2063	422.68	Kirkland_Manholes-2671	399.75	265	8.65	8	PVC	0.01	2,074	24	77	101	4.9	SM14-Ex-EX209	
Kirkland_Main-718	Kirkland_Manholes-2066	434.49	Kirkland_Manholes-2059	433	119.7	1.24	8	PVC	0.01	787	14	4	18	2.3	SM14-Ex-EX213	
Kirkland_Main-719	Kirkland_Manholes-2698	186.34	Kirkland_Manholes-2068	163.08	368.4	6.31	8	PVC	0.01	1,772	20	64	84	4.7	SM14-Ex-EX198	
Kirkland_Main-720	Kirkland_Manholes-2073	208.76	Kirkland_Manholes-2072	202.36	249.4	2.57	8	PVC	0.01	1,129	3	4	7	0.6	SM14-Ex-EX200	
Kirkland_Main-721	Kirkland_Manholes-2072	202.36	Kirkland_Manholes-2071	194.98	377.1	1.96	8	PVC	0.01	986	7	9	15	1.5	SM14-Ex-EX200	
Kirkland_Main-722	Kirkland_Manholes-2071	194.98	Kirkland_Manholes-2070	185.96	391.2	2.31	8	PVC	0.01	1,071	10	13	23	2.2	SM14-Ex-EX200	
Kirkland_Main-723	Kirkland_Manholes-2070	185.96	Kirkland_Manholes-2069	170.43	333.6	4.65	8	PVC	0.01	1,521	14	21	36	2.3	SM14-Ex-EX200	
Kirkland_Main-724	Kirkland_Manholes-2082	247.37	Kirkland_Manholes-2083	246.89	120.8	0.4	8	PVC	0.01	447	1	4	5	1.1		
Kirkland_Main-725	Kirkland_Manholes-2083	246.89	Kirkland_Manholes-658	246.8	21.8	0.4	8	PVC	0.01	446	1	9	10	2.3		
Kirkland_Main-727	Kirkland_Manholes-2077	125.7	Kirkland_Manholes-2078	109.29	215.7	7.61	8	PVC	0.01	1,945	36	25	61	3.1	SM14-Ex-EX195	
Kirkland_Main-728	Kirkland_Manholes-2076	138.89	Kirkland_Manholes-2077	125.7	187.9	7.02	8	PVC	0.01	1,868	32	17	49	2.6	SM14-Ex-EX195	
Kirkland_Main-729	Kirkland_Manholes-2075	153.92	Kirkland_Manholes-2076	138.89	219.4	6.85	8	PVC	0.01	1,845	2	8	10	0.5	SM14-Ex-EX195	
Kirkland_Main-731	Kirkland_Manholes-574	110.98	Kirkland_Manholes-595	103.44	159.1	4.74	8	PVC	0.01	1,535	5	17	21	1.4	SM14-Ex-EX116	
Kirkland_Main-736	Kirkland_Manholes-1656	125.68	Kirkland_Manholes-1655	123.15	42	6.03	8	PVC	0.01	1,731	9	8	18	1		
Kirkland_Main-737	Kirkland_Manholes-1655	123.15	Kirkland_Manholes-1657	121.13	91.5	2.21	8	PVC	0.01	1,048	10	17	27	2.5		
Kirkland_Main-738	Kirkland_Manholes-1658	125.68	Kirkland_Manholes-1657	125.55	31.5	0.4	8	PVC	0.01	446	3	8	12	2.6		Drop Connection
Kirkland_Main-739	Kirkland_Manholes-1657	121.13	Kirkland_Manholes-1659	116.52	191.7	2.41	8	PVC	0.01	1,093	14	33	47	4.3		
Kirkland_Main-740	Kirkland_Manholes-1659	116.52	Kirkland_Manholes-1660	110.77	122.6	4.69	8	PVC	0.01	1,527	33	41	74	4.8		
Kirkland_Main-741	Kirkland_Manholes-1660	110.77	Kirkland_Manholes-1662	100.46	127.6	8.08	8	PVC	0.01	2,004	33	50	83	4.1		
Kirkland_Main-742	Kirkland_Manholes-1663	103.65	Kirkland_Manholes-1661	102.19	55.6	2.62	8	PVC	0.01	1,142	4	17	20	1.8		
Kirkland_Main-743	Kirkland_Manholes-1661	102.19	Kirkland_Manholes-1662	100.46	11.1	15.62	8	PVC	0.01	2,786	4	25	29	1		
Kirkland_Main-744	Kirkland_Manholes-1662	100.46	Kirkland_Manholes-1665	94.21	177.6	3.52	8	PVC	0.01	1,322	39	83	121	9.2		
Kirkland_Main-745	Kirkland_Manholes-1664	108.5	Kirkland_Manholes-1663	103.65	57.4	8.45	8	PVC	0.01	2,049	3	8	11	0.5	SM14-Ex-EX169	
Kirkland_Main-746	Kirkland_Manholes-1667	101.23	Kirkland_Manholes-1666	89.71	215.8	5.34	8	PVC	0.01	1,629	18	41	59	3.6		
Kirkland_Main-747	Kirkland_Manholes-1668	119.52	Kirkland_Manholes-1667	101.23	220.6	8.29	8	PVC	0.01	2,030	11	25	36	1.8		
Kirkland_Main-748	Kirkland_Manholes-1295	119.7	Kirkland_Manholes-572	113.73	319.3	1.87	8	PVC	0.01	964	115	322	437	45.4	SM14-Ex-EX117	
Kirkland_Main-749	Kirkland_Manholes-1256	151.53	Kirkland_Manholes-1284	145.84	256.4	2.22	8	PVC	0.01	1,050	30	116	145	13.9	SM14-Ex-EX108	
Kirkland_Main-750	Kirkland_Manholes-1283	147.65	Kirkland_Manholes-1284	145.84	53.9	3.36	8	PVC	0.01	1,292	6	17	22	1.7	SM14-Ex-EX108	
Kirkland_Main-751	Kirkland_Manholes-1282	154.9	Kirkland_Manholes-1283	147.65	295.8	2.45	8	PVC	0.01	1,104	2	8	11	1	SM14-Ex-EX108	
Kirkland_Main-753	Kirkland_Manholes-1284	145.84	Kirkland_Manholes-1287	140.18	314.1	1.8	8	PVC	0.01	946	38	140	179	18.9	SM14-Ex-EX105	
Kirkland_Main-755	Kirkland_Manholes-1285	150.78	Kirkland_Manholes-1286	147.03	125.8	2.98	8	PVC	0.01	1,217	2	8	10	0.8	SM14-Ex-EX109	
Kirkland_Main-756	Kirkland_Manholes-1286	147.03	Kirkland_Manholes-1287	140.18	192.2	3.56	8	PVC	0.01	1,331	5	17	21	1.6	SM14-Ex-EX109	

2035 (20-year) with Proposed Improvements - Peak Hour Flow - Pipe Capacity Table

Label	Upstream Node	Upstream Invert Elevation (ft)	Downstream Node	Downstream Invert Elevation (ft)	Length (ft)	Slope (%)	Diameter (in)	Material	Manning's n	Design Capacity (gpm)	Domestic Flow (gpm)	I/I Flow (gpm)	Total Flow (gpm)	Percent Full (%)	CIP No.	Notes
Kirkland_Main-757	Kirkland_Manholes-1289	131.61	Kirkland_Manholes-1290	127.52	235.4	1.74	8	PVC	0.01	929	54	182	235	25.3	SM14-Ex-EX105	
Kirkland_Main-758	Kirkland_Manholes-1290	127.52	Kirkland_Manholes-576	111.2	318.6	5.12	8	PVC	0.01	1,596	73	256	329	20.6	SM14-Ex-EX105	
Kirkland_Main-759	Kirkland_Manholes-1291	137.27	Kirkland_Manholes-1290	127.52	280.9	3.47	8	PVC	0.01	1,314	17	66	83	6.3	SM14-Ex-EX111	
Kirkland_Main-760	Kirkland_Manholes-1261	144.57	Kirkland_Manholes-1291	137.27	276	2.64	8	PVC	0.01	1,147	13	58	71	6.2	SM14-Ex-EX111	
Kirkland_Main-761	Kirkland_Manholes-1227	174.57	Kirkland_Manholes-584	159.38	158.7	9.57	8	PVC	0.01	2,181	36	91	126	5.8	SM14-Ex-EX96	
Kirkland_Main-762	Kirkland_Manholes-1238	263.26	Kirkland_Manholes-1298	253.38	261	3.78	8	PVC	0.01	1,372	5	17	22	1.6	SM14-Ex-EX64	
Kirkland_Main-763	Kirkland_Manholes-1298	253.38	Kirkland_Manholes-1245	243.41	258.4	3.86	8	PVC	0.01	1,385	9	25	34	2.4	SM14-Ex-EX64	
Kirkland_Main-765	Kirkland_Manholes-1302	252.61	Kirkland_Manholes-1301	241.1	158.8	7.25	8	PVC	0.01	1,898	3	8	11	0.6	SM14-Ex-EX98	
Kirkland_Main-766	Kirkland_Manholes-1230	236.32	Kirkland_Manholes-1229	218.73	349.5	5.03	8	PVC	0.01	1,582	23	58	81	5.1	SM14-Ex-EX96	
Kirkland_Main-767	Kirkland_Manholes-1229	218.73	Kirkland_Manholes-1228	189.87	369	7.82	8	PVC	0.01	1,972	28	66	94	4.8	SM14-Ex-EX96	
Kirkland_Main-768	Kirkland_Manholes-727	84.25	Kirkland_Manholes-728	70.86	152.9	8.76	8	PVC	0.01	2,086	185	537	722	34.6	SM14-Ex-EX117	
Kirkland_Main-769	Kirkland_Manholes-1407	474.89	Kirkland_Manholes-1406	473.57	319.1	0.41	8	PVC	0.01	453	47	30	77	17		
Kirkland_Main-770	Kirkland_Manholes-1415	475.19	Kirkland_Manholes-1406	473.57	245.1	0.66	8	PVC	0.01	573	42	47	89	15.6		
Kirkland_Main-771	Kirkland_Manholes-1408	476.13	Kirkland_Manholes-1407	474.89	287.1	0.43	8	PVC	0.01	463	22	26	48	10.4		
Kirkland_Main-772	Kirkland_Manholes-1409	479.33	Kirkland_Manholes-1408	476.13	271.9	1.18	8	PVC	0.01	765	22	21	43	5.7		
Kirkland_Main-773	Kirkland_Manholes-1410	479.58	Kirkland_Manholes-1409	479.33	219	0.11	8	PVC	0.01	238	19	17	36	15.2		
Kirkland_Main-774	Kirkland_Manholes-1411	480.36	Kirkland_Manholes-1410	479.58	194.5	0.4	8	PVC	0.01	445	18	13	31	6.9		
Kirkland_Main-775	Kirkland_Manholes-1412	483.98	Kirkland_Manholes-1411	480.36	100.6	3.6	8	PVC	0.01	1,338	4	4	8	0.6		
Kirkland_Main-776	Kirkland_Manholes-1853	276.11	Kirkland_Manholes-1851	275	191.4	0.58	8	PVC	0.01	537	2	4	6	1.1		
Kirkland_Main-777	Kirkland_Manholes-1772	68.31	Kirkland_Manholes-2929	66.75	69.5	2.25	12	PVC	0.01	3,115	173	479	651	20.9	SM14-Ex-EX166	
Kirkland_Main-778	Kirkland_Manholes-2929	66.75	Kirkland_Manholes-729	64.46	261.6	0.88	12	PVC	0.01	1,946	173	487	660	33.9	SM14-Ex-EX166	
Kirkland_Main-780	Kirkland_Manholes-1413	481	Kirkland_Manholes-1411	480.36	161.4	0.4	8	PVC	0.01	446	12	4	16	3.7		
Kirkland_Main-781	Kirkland_Manholes-1418	477.42	Kirkland_Manholes-1414	476.69	182.7	0.4	8	PVC	0.01	446	5	17	22	5		
Kirkland_Main-782	Kirkland_Manholes-2078	109.29	Kirkland_Manholes-2079	101.7	225.4	3.37	8	PVC	0.01	1,294	42	33	75	5.8	SM14-Ex-EX195	
Kirkland_Main-783	Kirkland_Manholes-2079	101.7	Kirkland_Manholes-2080	100.3	24.2	5.79	8	PVC	0.01	1,697	44	41	86	5		
Kirkland_Main-784	Kirkland_Manholes-2129	162.62	Kirkland_Manholes-2130	161.57	13	8.1	12	PVC	0.01	5,916	1	9	9	0.2	SM14-Ex-EX235	
Kirkland_Main-785	Kirkland_Manholes-2128	162.8	Kirkland_Manholes-2129	162.62	31	0.58	12	PVC	0.01	1,584	0	4	5	0.3		
Kirkland_Main-786	Kirkland_Manholes-2127	166.38	Kirkland_Manholes-2130	161.57	81	5.94	8	PVC	0.01	1,718	23	9	32	1.8	SM14-Ex-EX235	
Kirkland_Main-787	Kirkland_Manholes-2131	158.3	O-32	156.08	22.1	10.06	15	PVC	0.01	11,953	828	1,636	2,464	20.6	SM14-Ex-EX236	
Kirkland_Main-788	Kirkland_Manholes-2139	96.6	Kirkland_Manholes-2138	94.8	32.5	5.54	8	PVC	0.01	1,659	7	25	32	1.9		
Kirkland_Main-789	Kirkland_Manholes-2154	28.66	Kirkland_Manholes-2153	28.2	11.2	4.1	8	PVC	0.01	1,428	4	39	43	3	SM14-Ex-EX220	
Kirkland_Main-790	Kirkland_Manholes-2153	28.2	Kirkland_Manholes-2152	27.32	8.5	10.4	8	PVC	0.01	2,274	4	46	50	2.2	SM14-Ex-EX220	
Kirkland_Main-791	Kirkland_Manholes-2152	27.32	Kirkland_Manholes-2320	18	38.7	24.05	8	PVC	0.01	3,458	4	52	56	1.6		
Kirkland_Main-792	Kirkland_Manholes-2151	49.81	Kirkland_Manholes-2154	28.66	303.9	6.96	8	PVC	0.01	1,860	4	33	37	2	SM14-Ex-EX220	
Kirkland_Main-793	Kirkland_Manholes-2150	50.98	Kirkland_Manholes-2151	49.81	135.2	0.87	8	PVC	0.01	656	2	26	28	4.3	SM14-Ex-EX220	
Kirkland_Main-794	Kirkland_Manholes-2149	76.26	Kirkland_Manholes-2150	50.98	227.7	11.1	8	PVC	0.01	2,349	1	20	21	0.9	SM14-Ex-EX220	
Kirkland_Main-795	Kirkland_Manholes-2148	77.03	Kirkland_Manholes-2149	76.26	100.5	0.77	8	PVC	0.01	617	0	13	13	2.1	SM14-Ex-EX220	
Kirkland_Main-796	Kirkland_Manholes-2147	92.38	Kirkland_Manholes-2148	77.03	204.1	7.52	8	PVC	0.01	1,934	0	7	7	0.3	SM14-Ex-EX220	
Kirkland_Main-800	Kirkland_Manholes-2158	102.11	Kirkland_Manholes-2157	100.18	271.7	0.71	8	PVC	0.01	594	3	7	9	1.5		
Kirkland_Main-801	Kirkland_Manholes-2160	86.23	Kirkland_Manholes-2159	84.71	220.9	0.69	8	PVC	0.01	585	1	7	8	1.4		
Kirkland_Main-802	Kirkland_Manholes-2157	100.18	Kirkland_Manholes-2159	84.71	251.5	6.15	8	PVC	0.01	1,749	17	52	69	4		
Kirkland_Main-804	Kirkland_Manholes-2134	124.65	Kirkland_Manholes-2135	110	281.7	5.2	8	PVC	0.01	1,608	6	26	32	2	SM14-Ex-EX221	
Kirkland_Main-805	Kirkland_Manholes-2133	139	Kirkland_Manholes-2134	124.65	362.7	3.96	8	PVC	0.01	1,402	3	20	23	1.6	SM14-Ex-EX221	
Kirkland_Main-806	Kirkland_Manholes-2132	159.52	Kirkland_Manholes-2131	158.3	73.8	1.65	15	PVC	0.01	4,846	823	1,631	2,454	50.6	SM14-Ex-EX236	
Kirkland_Main-807	Kirkland_Manholes-2126	177.6	Kirkland_Manholes-2127	166.38	202.1	5.55	8	PVC	0.01	1,661	23	4	27	1.6	SM14-Ex-EX235	
Kirkland_Main-808	Kirkland_Manholes-2125	177.39	Kirkland_Manholes-2132	159.52	237.1	7.54	12	PVC	0.01	5,707	803	1,601	2,404	42.1		
Kirkland_Main-809	Kirkland_Manholes-2304	192.91	Kirkland_Manholes-2125	177.39	277.3	5.6	12	PVC	0.01	4,918	803	1,597	2,399	48.8		
Kirkland_Main-810	Kirkland_Manholes-2136	110.1	Kirkland_Manholes-2137	107.9	254.4	0.86	10	PVC	0.01	1,189	2	8	10	0.9		
Kirkland_Main-811	Kirkland_Manholes-2137	107.9	Kirkland_Manholes-2080	100.3	293.2	2.59	10	PVC	0.01	2,058	8	17	24	1.2		
Kirkland_Main-812	Kirkland_Manholes-2080	100.3	Kirkland_Manholes-2138	94.8	252.5	2.18	10	PVC	0.01	1,887	53	66	119	6.3		
Kirkland_Main-813	Kirkland_Manholes-2138	94.8	Kirkland_Manholes-2140	88.47	239.3	2.65	10	PVC	0.01	2,079	61	99	160	7.7		
Kirkland_Main-814	Kirkland_Manholes-2140	88.47	Kirkland_Manholes-2141	73.53	356.2	4.19	10	PVC	0.01	2,618	75	165	241	9.2		
Kirkland_Main-815	Kirkland_Manholes-2141	73.53	Kirkland_Manholes-2142	68.99	196.1	2.31	10	PVC	0.01	1,945	116	215	330	17		
Kirkland_Main-816	Kirkland_Manholes-2142	68.99	Kirkland_Manholes-2143	61.9	284.3	2.49	10	PVC	0.01	2,019	129	289	417	20.7		
Kirkland_Main-817	Kirkland_Manholes-2876	267.92	Kirkland_Manholes-2877	259.41	173	4.92	8	PVC	0.01	1,564	6	21	28	1.8		
Kirkland_Main-818	Kirkland_Manholes-2877	259.41	Kirkland_Manholes-625	258	37.7	3.74	8	PVC	0.01	1,364	7	26	33	2.4		
Kirkland_Main-819	Kirkland_Manholes-2878	269.8	Kirkland_Manholes-2876	267.92	58	3.24	8	PVC	0.01	1,269	2	9	11	0.9		
Kirkland_Main-820	Kirkland_Manholes-2882	274.26	Kirkland_Manholes-2878	269.8	141	3.16	8	PVC	0.01	1,254	1	4	5	0.4		
Kirkland_Main-821	Kirkland_Manholes-1801	112.29	Kirkland_Manholes-1802	95.68	270.4	6.14	8	PVC	0.01	1,747	86	254	340	19.4	SM4	
Kirkland_Main-822	Kirkland_Manholes-1803	87.57	Kirkland_Manholes-1401	76.78	133.9	8.06	8	PVC	0.01	2,002	2	8	10	0.5	SM14-Ex-EX141	
Kirkland_Main-823	Kirkland_Manholes-1804	103.12	Kirkland_Manholes-1403	89.74	129.7	10.32	8	PVC	0.01	2,265	2	8	10	0.5	SM14-Ex-EX140	
Kirkland_Main-826	Kirkland_Manholes-1807	44.26	Kirkland_Manholes-1806	38.89	57.7	9.3	8	PVC	0.01	2,150	119	304	422	19.6	SM4	

2035 (20-year) with Proposed Improvements - Peak Hour Flow - Pipe Capacity Table

Label	Upstream Node	Upstream Invert Elevation (ft)	Downstream Node	Downstream Invert Elevation (ft)	Length (ft)	Slope (%)	Diameter (in)	Material	Manning's n	Design Capacity (gpm)	Domestic Flow (gpm)	I/I Flow (gpm)	Total Flow (gpm)	Percent Full (%)	CIP No.	Notes
Kirkland_Main-827	Kirkland_Manholes-589	126.06	Kirkland_Manholes-590	118.3	332.1	2.34	8	PVC	0.01	1,078	4	8	12	1.1	SM14-Ex-EX158	
Kirkland_Main-828	Kirkland_Manholes-1802	95.68	Kirkland_Manholes-1810	85.96	289.7	3.35	8	PVC	0.01	1,291	95	279	373	28.9	SM4	
Kirkland_Main-829	Kirkland_Manholes-1833	16.5	Kirkland_Manholes-1793	15.37	141.1	0.8	8	PVC	0.01	631	3	13	16	2.5		
Kirkland_Main-830	Kirkland_Manholes-1836	11	Kirkland_Manholes-1791	8.2	291.3	0.96	15	PVC	0.01	3,695	495	891	1,386	37.5		
Kirkland_Main-832	Kirkland_Manholes-1850	19.39	Kirkland_Manholes-1849	16.69	373.2	0.72	8	PVC	0.01	600	5	13	18	3	SM10	
Kirkland_Main-833	Kirkland_Manholes-1849	16.69	Kirkland_Manholes-1847	16.59	254.1	0.04	8	PVC	0.01	140	6	20	25	18.2	SM10	
Kirkland_Main-834	Kirkland_Manholes-1847	16.59	Kirkland_Manholes-1846	15.1	93.2	1.6	12	PVC	0.01	2,628	7	26	33	1.2	SM10	
Kirkland_Main-835	Kirkland_Manholes-2633	278.44	Kirkland_Manholes-2632	276.84	129.7	1.23	8	PVC	0.01	783	4	9	13	1.6	SM14-Ex-EX295	
Kirkland_Main-837	Kirkland_Manholes-2605	280.73	Kirkland_Manholes-2633	278.44	217.9	1.05	8	PVC	0.01	723	2	4	7	0.9	SM14-Ex-EX295	
Kirkland_Main-838	Kirkland_Manholes-2634	286.56	Kirkland_Manholes-2635	275.48	268.8	4.12	8	PVC	0.01	1,431	4	4	8	0.6	SM14-Ex-EX294	
Kirkland_Main-839	Kirkland_Manholes-2635	275.48	Kirkland_Manholes-2636	245.46	401.2	7.48	8	PVC	0.01	1,929	6	13	19	1	SM14-Ex-EX294	
Kirkland_Main-840	Kirkland_Manholes-2636	245.46	Kirkland_Manholes-2637	187.87	397.8	14.48	8	PVC	0.01	2,683	8	17	25	0.9	SM14-Ex-EX294	
Kirkland_Main-841	Kirkland_Manholes-2640	93.15	Kirkland_Manholes-2641	88.89	86.7	4.91	8	PVC	0.01	1,563	9	19	28	1.8		
Kirkland_Main-842	Kirkland_Manholes-2639	115.66	Kirkland_Manholes-2640	93.15	98.6	22.84	8	PVC	0.01	3,369	6	12	19	0.6		
Kirkland_Main-843	Kirkland_Manholes-2638	117.25	Kirkland_Manholes-2639	115.66	47.5	3.35	8	PVC	0.01	1,290	3	6	9	0.7		
Kirkland_Main-844	Kirkland_Manholes-2643	117.26	Kirkland_Manholes-2642	102.55	182.7	8.05	8	PVC	0.01	2,001	3	6	9	0.4		
Kirkland_Main-848	Kirkland_Manholes-2645	79.04	Kirkland_Manholes-2644	74.88	115.7	3.59	8	PVC	0.01	1,337	15	37	52	3.9		
Kirkland_Main-850	Kirkland_Manholes-1481	462.54	Kirkland_Manholes-1482	457.77	84.3	5.66	8	PVC	0.01	1,677	6	21	27	1.6	SM14-Ex-EX268	
Kirkland_Main-851	Kirkland_Manholes-1495	496.81	Kirkland_Manholes-1484	495.36	362.4	0.4	8	PVC	0.01	446	1	4	6	1.3		
Kirkland_Main-852	Kirkland_Manholes-1484	495.36	Kirkland_Manholes-1485	486.98	151.8	5.52	8	PVC	0.01	1,657	12	34	46	2.8		
Kirkland_Main-853	Kirkland_Manholes-1485	486.98	Kirkland_Manholes-1486	483.92	112.4	2.72	8	PVC	0.01	1,163	21	52	73	6.2		
Kirkland_Main-854	Kirkland_Manholes-1486	483.92	Kirkland_Manholes-1488	482.18	104.3	1.67	8	PVC	0.01	910	23	56	79	8.7		
Kirkland_Main-855	Kirkland_Manholes-1488	482.18	Kirkland_Manholes-1489	480.6	353.4	0.45	8	PVC	0.01	471	28	64	93	19.6		
Kirkland_Main-856	Kirkland_Manholes-1487	483.25	Kirkland_Manholes-1488	482.18	163.9	0.65	8	PVC	0.01	570	2	4	7	1.2		
Kirkland_Main-857	Kirkland_Manholes-1489	480.6	Kirkland_Manholes-2029	479.06	117.8	1.31	8	PVC	0.01	806	30	69	99	12.2		
Kirkland_Main-858	Kirkland_Manholes-1490	499.13	Kirkland_Manholes-1492	491.87	290.5	2.5	8	PVC	0.01	1,115	3	4	7	0.7		
Kirkland_Main-859	Kirkland_Manholes-1492	491.87	Kirkland_Manholes-1491	489.53	101	2.32	8	PVC	0.01	1,073	5	9	14	1.3		
Kirkland_Main-860	Kirkland_Manholes-1491	489.53	Kirkland_Manholes-1485	486.98	404.5	0.63	8	PVC	0.01	560	7	13	20	3.6		
Kirkland_Main-861	Kirkland_Manholes-1493	479.91	Kirkland_Manholes-2025	477	402.9	0.72	8	PVC	0.01	599	8	9	17	2.8		
Kirkland_Main-862	Kirkland_Manholes-1494	496.1	Kirkland_Manholes-1484	495.36	68.3	1.08	8	PVC	0.01	734	9	26	35	4.8		
Kirkland_Main-865	Kirkland_Manholes-2234	145.49	Kirkland_Manholes-2235	140.92	280.9	1.63	8	PVC	0.01	899	3	7	10	1.1	SM14-Ex-EX221	
Kirkland_Main-866	Kirkland_Manholes-2235	140.92	Kirkland_Manholes-2133	139	112.7	1.7	8	PVC	0.01	920	3	13	16	1.8	SM14-Ex-EX221	
Kirkland_Main-867	Kirkland_Manholes-2236	23.9	Kirkland_Manholes-2230	23.3	57.5	1.04	8	PVC	0.01	720	0	7	7	0.9		
Kirkland_Main-868	Kirkland_Manholes-2702	256.62	Kirkland_Manholes-1633	254.8	313.1	0.58	8	PVC	0.01	538	7	13	20	3.7	SM14-Ex-EX204	
Kirkland_Main-869	Kirkland_Manholes-1634	223.49	Kirkland_Manholes-1635	192.35	312.2	9.97	12	PVC	0.01	6,565	366	910	1,276	19.4	SM7	
Kirkland_Main-870	Kirkland_Manholes-1635	192.35	Kirkland_Manholes-1638	164.94	265.5	10.33	12	PVC	0.01	6,679	368	914	1,282	19.2	SM7	
Kirkland_Main-871	Kirkland_Manholes-1636	172.84	Kirkland_Manholes-1637	170.82	135.8	1.49	8	PVC	0.01	860	2	4	6	0.7		
Kirkland_Main-872	Kirkland_Manholes-1637	170.82	Kirkland_Manholes-1639	169.94	172.1	0.51	8	PVC	0.01	504	3	9	11	2.2		
Kirkland_Main-873	Kirkland_Manholes-1639	169.94	Kirkland_Manholes-1638	164.94	235.7	2.12	8	PVC	0.01	1,027	27	103	130	12.6	SM14-Ex-EX202	
Kirkland_Main-874	Kirkland_Manholes-1638	164.94	Kirkland_Manholes-1642	158.76	65.1	9.49	12	PVC	0.01	6,403	395	1,022	1,417	22.1	SM7	
Kirkland_Main-875	Kirkland_Manholes-1641	205.91	Kirkland_Manholes-1640	188.59	221.5	7.82	8	PVC	0.01	1,971	3	4	7	0.4	SM14-Ex-EX203	
Kirkland_Main-877	Kirkland_Manholes-1643	156.25	Kirkland_Manholes-1648	152.03	150	2.81	8	PVC	0.01	1,183	2	8	10	0.9	SM14-Ex-EX196	
Kirkland_Main-878	Kirkland_Manholes-1644	159.14	O-25	154.59	17.5	26	8	PVC	0.01	3,595	23	60	83	2.3		
Kirkland_Main-879	Kirkland_Manholes-1645	171.46	Kirkland_Manholes-1644	159.14	257.8	4.78	8	PVC	0.01	1,541	23	56	79	5.1		
Kirkland_Main-880	Kirkland_Manholes-1625	179.1	Kirkland_Manholes-1645	171.46	179.3	4.26	8	PVC	0.01	1,455	16	52	67	4.6		
Kirkland_Main-881	Kirkland_Manholes-1647	165.32	O-24	163.59	78.9	2.18	8	PVC	0.01	1,042	1	4	5	0.5	SM14-Ex-EX175	
Kirkland_Main-882	Kirkland_Manholes-1676	98.96	Kirkland_Manholes-1677	88.12	84.8	12.79	8	PVC	0.01	2,521	27	33	60	2.4		
Kirkland_Main-883	Kirkland_Manholes-1678	99.76	Kirkland_Manholes-1676	98.96	128.1	0.62	8	PVC	0.01	557	21	17	38	6.8		
Kirkland_Main-884	Kirkland_Manholes-1679	107.21	Kirkland_Manholes-1678	99.76	181.8	4.1	8	PVC	0.01	1,427	21	8	29	2		
Kirkland_Main-885	Kirkland_Manholes-1683	75.33	Kirkland_Manholes-1682	74.03	148.9	0.87	8	PVC	0.01	659	4	17	21	3.1		
Kirkland_Main-886	Kirkland_Manholes-1682	74.03	Kirkland_Manholes-1681	72.36	31.7	5.27	8	PVC	0.01	1,619	5	25	30	1.8		
Kirkland_Main-887	Kirkland_Manholes-602	90.22	Kirkland_Manholes-1680	83.64	138.4	4.75	8	PVC	0.01	1,537	127	400	527	34.3	SM5	
Kirkland_Main-888	Kirkland_Manholes-1680	83.64	Kirkland_Manholes-1681	72.36	151.4	7.45	8	PVC	0.01	1,925	129	409	538	27.9	SM5	
Kirkland_Main-889	Kirkland_Manholes-600	91.95	Kirkland_Manholes-1687	86.12	197.8	2.95	8	PVC	0.01	1,210	151	380	531	43.9	SM14-Ex-EX117	
Kirkland_Main-890	Kirkland_Manholes-1788	86.3	Kirkland_Manholes-727	84.25	363.6	0.56	8	PVC	0.01	529	25	132	157	29.7	SM14-Ex-EX167	
Kirkland_Main-891	Kirkland_Manholes-1686	60.42	Kirkland_Manholes-1685	57.24	38.9	8.17	8	PVC	0.01	2,016	1	8	9	0.4		
Kirkland_Main-892	Kirkland_Manholes-1681	72.36	Kirkland_Manholes-1685	57.24	220.4	6.86	8	PVC	0.01	1,846	135	442	576	31.2	SM5	
Kirkland_Main-893	Kirkland_Manholes-1687	86.12	Kirkland_Manholes-727	84.25	76.5	2.45	8	PVC	0.01	1,103	159	396	556	50.4	SM14-Ex-EX117	
Kirkland_Main-894	Kirkland_Manholes-1688	86.4	Kirkland_Manholes-1687	86.26	34.9	0.4	8	PVC	0.01	446	7	8	16	3.5		Drop Connection
Kirkland_Main-895	Kirkland_Manholes-621	70.36	Kirkland_Manholes-618	51.3	271.9	7.01	8	PVC	0.01	1,867	42	29	71	3.8	SM14-Ex-EX161	
Kirkland_Main-896	Kirkland_Manholes-617	67.92	Kirkland_Manholes-618	51.3	164.3	10.11	8	PVC	0.01	2,242	8	17	25	1.1	SM14-Ex-EX162	
Kirkland_Main-897	Kirkland_Manholes-1690	47.42	Kirkland_Manholes-1689	43.75	38.1	9.62	8	PVC	0.01	2,187	30	17	47	2.1	SM14-Ex-EX163	

2035 (20-year) with Proposed Improvements - Peak Hour Flow - Pipe Capacity Table

Label	Upstream Node	Upstream Invert Elevation (ft)	Downstream Node	Downstream Invert Elevation (ft)	Length (ft)	Slope (%)	Diameter (in)	Material	Manning's n	Design Capacity (gpm)	Domestic Flow (gpm)	I/I Flow (gpm)	Total Flow (gpm)	Percent Full (%)	CIP No.	Notes
Kirkland_Main-898	Kirkland_Manholes-2864	27	SOUTHBAY_WETWELL	22	7.5	67.05	8	PVC	0.01	5,773	15	33	47	0.8	SM14-Ex-EX314	WW Influent Pipe
Kirkland_Main-900	Kirkland_Manholes-1691	49.07	Kirkland_Manholes-1690	47.42	170.4	0.97	8	PVC	0.01	694	29	8	37	5.4	SM14-Ex-EX163	
Kirkland_Main-901	Kirkland_Manholes-618	51.3	Kirkland_Manholes-619	48.43	55.8	5.15	8	PVC	0.01	1,600	51	54	105	6.6	SM14-Ex-EX161	
Kirkland_Main-902	Kirkland_Manholes-619	48.43	Kirkland_Manholes-1689	43.75	128.1	3.65	8	PVC	0.01	1,347	53	78	132	9.8	SM14-Ex-EX161	
Kirkland_Main-903	Kirkland_Manholes-1693	36.33	Kirkland_Manholes-1692	35.9	53.8	0.8	8	PVC	0.01	630	5	8	13	2		
Kirkland_Main-905	Kirkland_Manholes-1809	70.83	Kirkland_Manholes-1703	58	295.2	4.35	8	PVC	0.01	1,470	2	8	10	0.7	SM14-Ex-EX153	
Kirkland_Main-910	Kirkland_Manholes-1707	126.28	Kirkland_Manholes-1706	124.78	10	14.96	12	PVC	0.01	8,041	26	116	141	1.8	SM14-Ex-EX196	
Kirkland_Main-911	Kirkland_Manholes-1710	134.24	Kirkland_Manholes-1709	133.97	34.7	0.78	12	PVC	0.01	1,833	20	83	103	5.6	SM14-Ex-EX196	
Kirkland_Main-912	Kirkland_Manholes-1708	148.34	Kirkland_Manholes-1709	133.97	305.2	4.71	12	PVC	0.01	4,511	3	17	20	0.4	SM14-Ex-EX197	
Kirkland_Main-913	Kirkland_Manholes-1709	133.97	Kirkland_Manholes-1707	126.28	136.1	5.65	12	PVC	0.01	4,942	25	107	132	2.7	SM14-Ex-EX196	
Kirkland_Main-914	Kirkland_Manholes-2281	374.95	Kirkland_Manholes-2263	374.13	166.2	0.49	8	PVC	0.01	495	0	4	5	0.9	SM14-Ex-EX212	
Kirkland_Main-915	Kirkland_Manholes-2283	405.87	Kirkland_Manholes-2282	401.71	113.4	3.67	8	PVC	0.01	1,350	7	21	29	2.1		
Kirkland_Main-916	Kirkland_Manholes-2295	415.45	Kirkland_Manholes-2294	370.88	306.7	14.53	8	PVC	0.01	2,688	4	9	12	0.5		
Kirkland_Main-917	Kirkland_Manholes-2294	370.88	Kirkland_Manholes-2293	362.58	254.1	3.27	8	PVC	0.01	1,274	6	13	19	1.5		
Kirkland_Main-918	Kirkland_Manholes-2298	374.75	Kirkland_Manholes-2297	358.91	231	6.86	8	PVC	0.01	1,846	6	13	18	1	SM14-Ex-EX210	
Kirkland_Main-919	Kirkland_Manholes-2297	358.91	Kirkland_Manholes-2296	354.23	230.5	2.03	8	PVC	0.01	1,005	7	17	25	2.4	SM14-Ex-EX210	
Kirkland_Main-920	Kirkland_Manholes-2772	308.23	O-3	307.9	81.9	0.4	8	PVC	0.01	446	55	170	225	50.4		Drop Connection
Kirkland_Main-921	Kirkland_Manholes-2293	362.58	Kirkland_Manholes-2296	354.23	294.7	2.83	8	PVC	0.01	1,187	14	34	48	4		
Kirkland_Main-922	Kirkland_Manholes-2299	342.7	Kirkland_Manholes-2300	337.19	153.2	3.6	8	PVC	0.01	1,337	23	60	83	6.2	SM14-Ex-EX206	
Kirkland_Main-923	Kirkland_Manholes-2296	354.23	Kirkland_Manholes-2299	342.7	146.7	7.86	8	PVC	0.01	1,976	22	56	78	3.9	SM14-Ex-EX206	
Kirkland_Main-924	Kirkland_Manholes-2264	383.3	Kirkland_Manholes-2263	374.13	85.7	10.7	8	PVC	0.01	2,307	349	764	1,113	48.3	SM14-Ex-EX248	
Kirkland_Main-925	Kirkland_Manholes-2432	257.14	Kirkland_Manholes-2312	256.91	169.1	0.14	8	PVC	0.01	260	2	4	6	2.4		
Kirkland_Main-926	Kirkland_Manholes-2312	256.91	Kirkland_Manholes-2311	256.52	196.4	0.2	8	PVC	0.01	314	6	9	15	4.6		
Kirkland_Main-927	Kirkland_Manholes-2282	401.71	Kirkland_Manholes-2264	383.3	409.8	4.49	8	PVC	0.01	1,494	349	760	1,109	74.2	SM14-Ex-EX248	
Kirkland_Main-928	Kirkland_Manholes-2288	423.18	Kirkland_Manholes-2286	420.26	97.3	3	8	PVC	0.01	1,221	3	9	12	1		
Kirkland_Main-929	Kirkland_Manholes-2289	426.62	Kirkland_Manholes-2288	423.18	150.1	2.29	8	PVC	0.01	1,067	1	4	6	0.5		
Kirkland_Main-930	Kirkland_Manholes-2286	420.26	Kirkland_Manholes-2287	418.83	164.5	0.87	8	PVC	0.01	657	5	13	18	2.7		
Kirkland_Main-931	Kirkland_Manholes-2287	418.83	Kirkland_Manholes-2283	405.87	87.5	14.81	8	PVC	0.01	2,714	7	17	24	0.9		
Kirkland_Main-932	Kirkland_Manholes-1585	238.49	Kirkland_Manholes-1586	212.55	318.9	8.13	8	PVC	0.01	2,011	2	4	6	0.3	SM14-Ex-EX173	
Kirkland_Main-933	Kirkland_Manholes-1586	212.55	Kirkland_Manholes-1587	210.95	268.2	0.6	8	PVC	0.01	545	3	9	12	2.2	SM14-Ex-EX173	
Kirkland_Main-934	Kirkland_Manholes-1589	233.01	Kirkland_Manholes-1587	210.95	318.8	6.92	8	PVC	0.01	1,855	84	223	307	16.6	SM14-Ex-EX171	
Kirkland_Main-935	Kirkland_Manholes-1587	210.95	Kirkland_Manholes-1603	202.22	137.6	6.34	8	PVC	0.01	1,776	92	240	332	18.7	SM14-Ex-EX172	
Kirkland_Main-936	Kirkland_Manholes-1588	231.21	Kirkland_Manholes-1587	230.56	162.2	0.4	8	PVC	0.01	446	2	4	7	1.5	SM14-Ex-EX172	Drop Connection
Kirkland_Main-938	Kirkland_Manholes-1590	241.99	Kirkland_Manholes-1589	233.01	173.6	5.17	8	PVC	0.01	1,603	83	219	302	18.8	SM14-Ex-EX171	
Kirkland_Main-939	Kirkland_Manholes-1591	253.12	Kirkland_Manholes-1590	241.99	399.8	2.78	8	PVC	0.01	1,176	81	215	295	25.1	SM14-Ex-EX171	
Kirkland_Main-940	Kirkland_Manholes-1592	255.76	Kirkland_Manholes-1591	253.12	306.5	0.86	8	PVC	0.01	654	77	210	288	43.9	SM14-Ex-EX124	
Kirkland_Main-942	Kirkland_Manholes-1593	256.67	Kirkland_Manholes-1592	255.76	194.7	0.47	8	PVC	0.01	482	57	167	224	46.6	SM14-Ex-EX131	
Kirkland_Main-943	Kirkland_Manholes-1594	254.46	Kirkland_Manholes-1595	245.33	353	2.59	8	PVC	0.01	1,134	3	4	7	0.7	SM14-Ex-EX130	
Kirkland_Main-944	Kirkland_Manholes-1595	245.33	Kirkland_Manholes-1596	228.98	200	8.17	8	PVC	0.01	2,016	5	9	14	0.7	SM14-Ex-EX130	
Kirkland_Main-945	Kirkland_Manholes-1596	228.98	Kirkland_Manholes-1597	180.84	398.5	12.08	8	PVC	0.01	2,450	7	13	20	0.8	SM14-Ex-EX130	
Kirkland_Main-946	Kirkland_Manholes-1601	173.67	Kirkland_Manholes-1598	169.75	176.3	2.22	8	PVC	0.01	1,051	74	176	250	23.8	SM14-Ex-EX121	
Kirkland_Main-947	Kirkland_Manholes-1599	200.11	Kirkland_Manholes-1598	169.75	271.2	11.19	8	PVC	0.01	2,359	4	9	13	0.6	SM14-Ex-EX170	
Kirkland_Main-948	Kirkland_Manholes-379	279.26	Kirkland_Manholes-380	277.21	303.7	0.67	8	PVC	0.01	579	3	9	12	2.1		
Kirkland_Main-949	Kirkland_Manholes-378	285.63	Kirkland_Manholes-379	279.26	366.8	1.74	8	PVC	0.01	929	2	4	6	0.6		
Kirkland_Main-950	Kirkland_Manholes-377	262.82	Kirkland_Manholes-376	239.8	319.8	7.2	8	PVC	0.01	1,892	2	4	6	0.3		
Kirkland_Main-951	Kirkland_Manholes-376	239.8	Kirkland_Manholes-375	234.87	251.6	1.96	8	PVC	0.01	987	89	253	342	34.7		
Kirkland_Main-953	Kirkland_Manholes-382	308.23	Kirkland_Manholes-381	307.41	91.4	0.9	8	PVC	0.01	668	3	9	12	1.8		
Kirkland_Main-954	Kirkland_Manholes-381	307.41	Kirkland_Manholes-383	304.37	123.9	2.45	8	PVC	0.01	1,104	4	13	17	1.5		
Kirkland_Main-955	Kirkland_Manholes-383	304.37	Kirkland_Manholes-384	296.91	253.7	2.94	8	PVC	0.01	1,209	6	17	23	1.9		
Kirkland_Main-956	Kirkland_Manholes-384	296.91	Kirkland_Manholes-424	292.81	99.3	4.13	8	PVC	0.01	1,432	7	21	29	2		
Kirkland_Main-957	Kirkland_Manholes-873	311.45	Kirkland_Manholes-385	303.54	299	2.65	8	PVC	0.01	1,147	2	4	7	0.6	SM14-Ex-EX33	
Kirkland_Main-958	Kirkland_Manholes-385	303.54	Kirkland_Manholes-387	300.3	93.5	3.46	8	PVC	0.01	1,312	4	9	12	0.9	SM14-Ex-EX33	
Kirkland_Main-959	Kirkland_Manholes-386	300.85	Kirkland_Manholes-387	300.3	138.6	0.4	8	PVC	0.01	444	3	4	7	1.6	SM14-Ex-EX33	
Kirkland_Main-960	Kirkland_Manholes-387	300.3	Kirkland_Manholes-388	297.69	129.3	2.02	8	PVC	0.01	1,002	8	17	26	2.6	SM14-Ex-EX33	
Kirkland_Main-962	Kirkland_Manholes-2611	254.27	Kirkland_Manholes-2612	250.12	152.9	2.71	8	PVC	0.01	1,162	3	4	8	0.7	SM14-Ex-EX297	
Kirkland_Main-963	Kirkland_Manholes-1075	291.84	Kirkland_Manholes-1121	289.91	99	1.95	8	PVC	0.01	984	61	142	378	38.4		
Kirkland_Main-964	Kirkland_Manholes-1121	289.91	Kirkland_Manholes-1068	279.38	106.4	9.89	8	PVC	0.01	2,218	62	146	384	17.3		
Kirkland_Main-966	Kirkland_Manholes-1105	155.49	Kirkland_Manholes-1052	151.4	310	1.32	8	PVC	0.01	810	162	312	475	58.6		
Kirkland_Main-967	Kirkland_Manholes-1108	160.8	Kirkland_Manholes-1105	155.49	333.3	1.59	8	PVC	0.01	890	11	13	24	2.7		
Kirkland_Main-968	Kirkland_Manholes-1104	175.28	Kirkland_Manholes-1106	168.9	388	1.64	18	PVC	0.01	7,859	912	2,288	3,200	40.7		
Kirkland_Main-969	Kirkland_Manholes-1109	162.78	Kirkland_Manholes-1108	160.8	303.1	0.65	8	PVC	0.01	570	2	9	11	1.9		
Kirkland_Main-970	Kirkland_Manholes-1110	163.51	Kirkland_Manholes-1109	162.78	317.4	0.23	8	PVC	0.01	338	1	4	6	1.7		

2035 (20-year) with Proposed Improvements - Peak Hour Flow - Pipe Capacity Table

Label	Upstream Node	Upstream Invert Elevation (ft)	Downstream Node	Downstream Invert Elevation (ft)	Length (ft)	Slope (%)	Diameter (in)	Material	Manning's n	Design Capacity (gpm)	Domestic Flow (gpm)	I/I Flow (gpm)	Total Flow (gpm)	Percent Full (%)	CIP No.	Notes
Kirkland_Main-972	Kirkland_Manholes-1128	162.57	O-7	162.29	71	0.4	24	PVC	0.01	8,346	392	751	1,319	15.8	SM14-Ex-EX4	
Kirkland_Main-973	Kirkland_Manholes-1127	163.92	Kirkland_Manholes-1128	162.57	132.6	1.02	24	PVC	0.01	13,318	391	743	1,310	9.8	SM14-Ex-EX4	
Kirkland_Main-974	Kirkland_Manholes-1086	198.2	Kirkland_Manholes-1122	184.29	391.8	3.55	8	PVC	0.01	1,328	15	52	67	5		
Kirkland_Main-975	Kirkland_Manholes-1122	184.29	Kirkland_Manholes-1123	182.63	257.7	0.64	24	PVC	0.01	10,594	277	670	1,123	10.6	SM14-Ex-EX4	
Kirkland_Main-976	Kirkland_Manholes-1130	185.43	Kirkland_Manholes-1122	185.35	20.3	0.4	12	PVC	0.01	1,314	249	614	1,039	79.1	SM14-Ex-EX320	Drop Connection
Kirkland_Main-977	Kirkland_Manholes-1123	182.63	Kirkland_Manholes-1124	177.02	186.2	3.01	24	PVC	0.01	22,913	284	674	1,134	4.9	SM14-Ex-EX4	
Kirkland_Main-978	Kirkland_Manholes-1124	177.02	Kirkland_Manholes-1125	167.88	251.4	3.64	24	PVC	0.01	25,165	353	713	1,242	4.9	SM14-Ex-EX4	
Kirkland_Main-979	Kirkland_Manholes-1125	167.88	Kirkland_Manholes-1126	164.51	134.8	2.5	24	PVC	0.01	20,870	391	734	1,301	6.2	SM14-Ex-EX4	
Kirkland_Main-980	Kirkland_Manholes-2840	90.84	Kirkland_Manholes-2841	31.53	332.1	17.86	8	PVC	0.01	2,980	5	12	18	0.6	SM14-Ex-EX310	
Kirkland_Main-981	Kirkland_Manholes-2851	10.8	Kirkland_Manholes-2852	10.72	17.2	0.47	18	PVC	0.01	4,181	434	799	1,233	29.5	SM14-Ex-EX289	
Kirkland_Main-982	Kirkland_Manholes-2853	25.84	Kirkland_Manholes-2852	10.72	47.1	32.11	8	PVC	0.01	3,995	1	6	7	0.2	SM14-Ex-EX289	
Kirkland_Main-983	Kirkland_Manholes-2852	10.72	KC_Manholes-18	10.29	84.8	0.51	18	PVC	0.01	4,364	437	811	1,248	28.6	SM14-Ex-EX289	
Kirkland_Main-984	Kirkland_Manholes-2788	251.6	Kirkland_Manholes-2789	247.4	283.4	1.48	8	PVC	0.01	858	25	99	124	14.5	SM14-Ex-EX313	
Kirkland_Main-985	Kirkland_Manholes-2789	247.4	Kirkland_Manholes-2790	235.81	170.4	6.8	8	PVC	0.01	1,839	28	103	131	7.1	SM14-Ex-EX313	
Kirkland_Main-987	Kirkland_Manholes-2790	235.81	Kirkland_Manholes-2791	226.53	127.8	7.26	8	PVC	0.01	1,900	29	107	136	7.2	SM14-Ex-EX313	
Kirkland_Main-988	Kirkland_Manholes-2791	226.53	Kirkland_Manholes-2792	199.25	298.7	9.13	8	PVC	0.01	2,131	31	112	142	6.7	SM14-Ex-EX313	
Kirkland_Main-989	Kirkland_Manholes-2794	201.04	Kirkland_Manholes-2792	199.25	290.5	0.62	8	PVC	0.01	553	4	9	12	2.2	SM14-Ex-EX312	
Kirkland_Main-991	Kirkland_Manholes-2795	201.42	Kirkland_Manholes-2794	201.04	162	0.23	8	PVC	0.01	341	2	4	6	1.8	SM14-Ex-EX312	
Kirkland_Main-992	Kirkland_Manholes-2792	199.25	Kirkland_Manholes-2793	190.95	116.2	7.14	8	PVC	0.01	1,885	43	124	167	8.9	SM14-Ex-EX313	
Kirkland_Main-993	Kirkland_Manholes-2793	190.95	Kirkland_Manholes-2803	158.22	135.7	24.12	8	PVC	0.01	3,462	44	129	173	5	SM14-Ex-EX313	
Kirkland_Main-994	Kirkland_Manholes-2842	26.9	Kirkland_Manholes-2850	13.3	475.2	2.86	24	PVC	0.01	22,330	588	1,245	1,905	8.5	SM14-Ex-EX309	
Kirkland_Main-995	Kirkland_Manholes-2850	13.3	KC_Manholes-18	10.29	41.7	7.21	24	PVC	0.01	35,453	591	1,252	1,914	5.4	SM14-Ex-EX309	
Kirkland_Main-996	Kirkland_Manholes-2856	18.03	Kirkland_Manholes-2845	16.72	134.6	0.98	8	PVC	0.01	696	13	14	27	3.9	SM14-Ex-EX315	
Kirkland_Main-997	Kirkland_Manholes-2857	19.7	Kirkland_Manholes-2856	18.03	135.5	1.23	8	PVC	0.01	783	13	9	22	2.9	SM14-Ex-EX315	
Kirkland_Main-998	Kirkland_Manholes-1928	375.97	Kirkland_Manholes-1929	374.67	53.7	2.42	12	PVC	0.01	3,235	225	580	805	24.9	SM14-Ex-EX205	
Kirkland_Main-999	Kirkland_Manholes-1929	374.67	Kirkland_Manholes-1579	359.44	398.3	3.82	12	PVC	0.01	4,065	269	648	917	22.6	SM14-Ex-EX205	
Kirkland_Main-1000	Kirkland_Manholes-1930	369.31	Kirkland_Manholes-1931	367.07	97.4	2.3	8	PVC	0.01	1,069	3	9	12	1.1		
Kirkland_Main-1001	Kirkland_Manholes-1931	367.07	Kirkland_Manholes-1932	360.4	233.1	2.86	8	PVC	0.01	1,193	5	13	18	1.5		
Kirkland_Main-1003	Kirkland_Manholes-1932	360.4	Kirkland_Manholes-1954	357.36	158.2	1.92	8	PVC	0.01	977	6	17	23	2.3		
Kirkland_Main-1004	Kirkland_Manholes-1935	274.07	Kirkland_Manholes-1881	267.11	156.7	4.44	8	PVC	0.01	1,486	43	90	133	8.9		
Kirkland_Main-1005	Kirkland_Manholes-1951	275.06	Kirkland_Manholes-1935	274.07	209.5	0.47	8	PVC	0.01	485	23	47	70	14.4		
Kirkland_Main-1006	Kirkland_Manholes-1936	301.29	Kirkland_Manholes-1935	274.07	237.6	11.46	8	PVC	0.01	2,387	18	39	57	2.4		
Kirkland_Main-1007	Kirkland_Manholes-1933	343.68	Kirkland_Manholes-1934	342.88	296	0.27	8	PVC	0.01	367	11	34	45	12.3		
Kirkland_Main-1008	Kirkland_Manholes-1954	357.36	Kirkland_Manholes-1934	342.88	118.8	12.19	8	PVC	0.01	2,462	7	21	28	1.1		
Kirkland_Main-1009	Kirkland_Manholes-1934	342.88	Kirkland_Manholes-1961	341.24	125.1	1.31	8	PVC	0.01	807	18	60	78	9.6		
Kirkland_Main-1010	Kirkland_Manholes-1938	323.43	Kirkland_Manholes-1936	301.29	243	9.11	8	PVC	0.01	2,128	15	34	50	2.3		
Kirkland_Main-1011	Kirkland_Manholes-1939	324.34	Kirkland_Manholes-1938	323.43	100	0.91	8	PVC	0.01	673	12	26	38	5.6		
Kirkland_Main-1012	Kirkland_Manholes-1937	332.23	Kirkland_Manholes-1938	323.43	194.4	4.53	8	PVC	0.01	1,500	3	4	7	0.5		
Kirkland_Main-1013	Kirkland_Manholes-1940	363.18	Kirkland_Manholes-1941	361.64	56.6	2.72	8	PVC	0.01	1,163	0	4	5	0.4		
Kirkland_Main-1014	Kirkland_Manholes-391	302.9	Kirkland_Manholes-389	295.78	243.6	2.92	8	PVC	0.01	1,205	48	137	186	15.4	SM14-Ex-EX50	
Kirkland_Main-1015	Kirkland_Manholes-389	295.78	Kirkland_Manholes-393	288.03	97.8	7.93	8	PVC	0.01	1,985	60	163	223	11.3	SM14-Ex-EX50	
Kirkland_Main-1016	Kirkland_Manholes-393	288.03	Kirkland_Manholes-380	277.21	135.7	7.97	8	PVC	0.01	1,991	64	172	236	11.9	SM14-Ex-EX50	
Kirkland_Main-1017	Kirkland_Manholes-395	253.88	Kirkland_Manholes-396	249.55	242.3	1.79	8	PVC	0.01	942	79	223	302	32.1		
Kirkland_Main-1018	Kirkland_Manholes-398	254.33	Kirkland_Manholes-397	247.33	147.9	4.73	8	PVC	0.01	1,534	1	4	6	0.4		
Kirkland_Main-1019	Kirkland_Manholes-396	249.55	Kirkland_Manholes-397	247.33	240.2	0.92	8	PVC	0.01	678	84	236	320	47.2		
Kirkland_Main-1020	Kirkland_Manholes-394	266.89	Kirkland_Manholes-395	253.88	150	8.67	8	PVC	0.01	2,076	74	197	271	13.1	SM14-Ex-EX50	
Kirkland_Main-1021	Kirkland_Manholes-380	277.21	Kirkland_Manholes-394	266.89	136.7	7.55	8	PVC	0.01	1,937	69	185	253	13.1	SM14-Ex-EX50	
Kirkland_Main-1022	Kirkland_Manholes-898	306.89	Kirkland_Manholes-899	305.17	102.3	1.68	8	PVC	0.01	914	2	9	10	1.1		
Kirkland_Main-1023	Kirkland_Manholes-899	305.17	Kirkland_Manholes-900	302.97	237.5	0.93	8	PVC	0.01	679	4	13	17	2.5		
Kirkland_Main-1024	Kirkland_Manholes-444	92.89	Kirkland_Manholes-443	91.49	172.9	0.81	8	PVC	0.01	634	10	45	54	8.6		
Kirkland_Main-1025	Kirkland_Manholes-525	156.27	Kirkland_Manholes-526	148.56	279.6	2.76	8	PVC	0.01	1,171	6	25	31	2.6	SM10	
Kirkland_Main-1027	Kirkland_Manholes-1198	189.72	Kirkland_Manholes-497	188.11	129.7	1.24	8	PVC	0.01	786	21	50	70	9	SM14-Ex-EX80	
Kirkland_Main-1030	Kirkland_Manholes-520	182.65	Kirkland_Manholes-519	157.09	301.6	8.48	8	PVC	0.01	2,053	6	17	22	1.1	SM10	
Kirkland_Main-1031	Kirkland_Manholes-499	185.94	Kirkland_Manholes-523	180.21	279.4	2.05	8	PVC	0.01	1,010	30	74	104	10.3	SM10	
Kirkland_Main-1032	Kirkland_Manholes-523	180.21	Kirkland_Manholes-522	152.47	278.9	9.95	8	PVC	0.01	2,224	33	83	115	5.2	SM10	
Kirkland_Main-1033	Kirkland_Manholes-522	152.47	Kirkland_Manholes-521	145.96	154.4	4.22	8	PVC	0.01	1,448	35	91	126	8.7	SM10	
Kirkland_Main-1034	Kirkland_Manholes-521	145.96	Kirkland_Manholes-518	138.7	160.6	4.52	8	PVC	0.01	1,499	37	99	136	9.1	SM10	
Kirkland_Main-1036	Kirkland_Manholes-518	138.7	Kirkland_Manholes-1179	123.76	316.8	4.72	8	PVC	0.01	1,531	48	132	180	11.8	SM10	
Kirkland_Main-1037	Kirkland_Manholes-519	157.09	Kirkland_Manholes-518	138.7	337.5	5.45	8	PVC	0.01	1,646	10	25	35	2.1	SM10	
Kirkland_Main-1041	Kirkland_Manholes-1235	275.6	Kirkland_Manholes-1233	274.4	201.2	0.6	8	PVC	0.01	545	3	8	11	2.1		
Kirkland_Main-1042	Kirkland_Manholes-1240	250.21	Kirkland_Manholes-1230	236.32	226.8	6.13	8	PVC	0.01	1,745	6	8	14	0.8	SM14-Ex-EX92	
Kirkland_Main-1043	Kirkland_Manholes-1243	249.45	Kirkland_Manholes-1242	244.28	74.2	6.97	8	PVC	0.01	1,862	2	4	6	0.3		

2035 (20-year) with Proposed Improvements - Peak Hour Flow - Pipe Capacity Table

Label	Upstream Node	Upstream Invert Elevation (ft)	Downstream Node	Downstream Invert Elevation (ft)	Length (ft)	Slope (%)	Diameter (in)	Material	Manning's n	Design Capacity (gpm)	Domestic Flow (gpm)	I/I Flow (gpm)	Total Flow (gpm)	Percent Full (%)	CIP No.	Notes
Kirkland_Main-1044	Kirkland_Manholes-1206	193.92	Kirkland_Manholes-1149	192.13	296.5	0.6	8	PVC	0.01	548	22	56	78	14.3	SM14-Ex-EX89	
Kirkland_Main-1049	Kirkland_Manholes-1268	189.24	Kirkland_Manholes-1269	174.05	110.9	13.69	8	PVC	0.01	2,609	6	17	22	0.9	SM14-Ex-EX107	
Kirkland_Main-1050	Kirkland_Manholes-1269	174.05	Kirkland_Manholes-1259	154.8	228.2	8.43	8	PVC	0.01	2,048	7	25	32	1.6	SM14-Ex-EX107	
Kirkland_Main-1051	Kirkland_Manholes-1267	201.75	Kirkland_Manholes-1268	189.24	323.1	3.87	8	PVC	0.01	1,387	4	8	13	0.9	SM14-Ex-EX107	
Kirkland_Main-1052	Kirkland_Manholes-1265	168.12	Kirkland_Manholes-1262	156.59	138.9	8.3	8	PVC	0.01	2,031	6	25	31	1.5		
Kirkland_Main-1053	Kirkland_Manholes-1497	270.45	Kirkland_Manholes-1499	268.92	211.1	0.72	8	PVC	0.01	600	23	60	83	13.8		
Kirkland_Main-1054	Kirkland_Manholes-1315	270.9	Kirkland_Manholes-1497	270.45	108.5	0.41	8	PVC	0.01	454	21	56	77	16.9		
Kirkland_Main-1055	Kirkland_Manholes-704	272.37	Kirkland_Manholes-145	271.65	145.7	0.49	8	PVC	0.01	496	17	39	55	11.1		
Kirkland_Main-1057	Kirkland_Manholes-1220	255.3	Kirkland_Manholes-1140	220.91	332.7	10.34	8	PVC	0.01	2,267	3	8	11	0.5	SM14-Ex-EX84	
Kirkland_Main-1058	Kirkland_Manholes-1222	248.84	Kirkland_Manholes-1142	218.06	350.4	8.79	8	PVC	0.01	2,090	5	8	13	0.6	SM14-Ex-EX85	
Kirkland_Main-1059	Kirkland_Manholes-1140	220.91	Kirkland_Manholes-1142	218.06	314	0.91	8	PVC	0.01	672	6	17	23	3.4	SM4	
Kirkland_Main-1061	Kirkland_Manholes-1224	232.76	Kirkland_Manholes-500	209.24	344.5	6.83	8	PVC	0.01	1,842	3	8	12	0.6	SM14-Ex-EX87	
Kirkland_Main-1062	Kirkland_Manholes-1085	204.43	Kirkland_Manholes-1130	185.43	381.7	4.98	8	PVC	0.01	1,573	225	610	1,010	64.2		
Kirkland_Main-1063	Kirkland_Manholes-1120	158.13	Kirkland_Manholes-712	157.06	229.6	0.47	8	PVC	0.01	481	36	13	48	10.1	SM14-Ex-EX1	
Kirkland_Main-1066	Kirkland_Manholes-1512	281.18	Kirkland_Manholes-1513	263.11	227.7	7.94	8	PVC	0.01	1,986	2	4	6	0.3	SM14-Ex-EX132	
Kirkland_Main-1067	Kirkland_Manholes-1161	78.67	Kirkland_Manholes-1162	78.51	20.6	0.78	15	PVC	0.01	3,326	110	405	515	15.5	SM14-Ex-EX77	
Kirkland_Main-1068	Kirkland_Manholes-1132	188.66	Kirkland_Manholes-1133	181.56	258.9	2.74	8	PVC	0.01	1,168	4	4	8	0.7	SM14-Ex-EX58	
Kirkland_Main-1069	Kirkland_Manholes-616	72.16	Kirkland_Manholes-617	67.92	242.5	1.75	8	PVC	0.01	932	4	8	13	1.4	SM14-Ex-EX162	
Kirkland_Main-1070	Kirkland_Manholes-1699	108.13	Kirkland_Manholes-1700	106.17	216.2	0.91	8	PVC	0.01	671	1	8	9	1.3	SM14-Ex-EX150	
Kirkland_Main-1071	Kirkland_Manholes-1700	106.17	Kirkland_Manholes-1802	95.68	325.3	3.22	8	PVC	0.01	1,266	5	17	22	1.7	SM14-Ex-EX150	
Kirkland_Main-1074	Kirkland_Manholes-1613	87.49	Kirkland_Manholes-1788	86.3	197.1	0.6	8	PVC	0.01	548	24	124	148	27.1	SM14-Ex-EX167	
Kirkland_Main-1075	Kirkland_Manholes-1793	15.37	Kirkland_Manholes-1794	12.63	22.1	12.39	8	PVC	0.01	2,482	30	20	50	2		
Kirkland_Main-1076	Kirkland_Manholes-1795	13.3	Kirkland_Manholes-1794	12.63	41.9	1.6	15	PVC	0.01	4,763	443	754	1,197	25.1		
Kirkland_Main-1077	Kirkland_Manholes-1789	14.67	Kirkland_Manholes-1790	14.6	18.2	0.38	21	PVC	0.01	5,726	436	735	1,170	20.4		
Kirkland_Main-1078	Kirkland_Manholes-1790	14.6	Kirkland_Manholes-1792	14.49	82.9	0.13	21	PVC	0.01	3,367	436	741	1,177	34.9		
Kirkland_Main-1079	Kirkland_Manholes-1791	8.2	PLAZA_WW	6	10.6	20.76	18	PVC	0.01	27,925	495	897	1,392	5	SM14-Ex-EX182	
Kirkland_Main-1080	Kirkland_Manholes-1792	14.49	Kirkland_Manholes-1795	13.3	199	0.6	21	PVC	0.01	7,159	437	748	1,184	16.5		
Kirkland_Main-1081	Kirkland_Manholes-1800	147.89	Kirkland_Manholes-1799	133.76	154.6	9.14	8	PVC	0.01	2,131	3	8	11	0.5	SM14-Ex-EX146	
Kirkland_Main-1082	Kirkland_Manholes-1799	133.76	Kirkland_Manholes-1798	126.65	165.5	4.3	8	PVC	0.01	1,461	8	25	33	2.2	SM14-Ex-EX146	
Kirkland_Main-1083	Kirkland_Manholes-1797	142.57	Kirkland_Manholes-1798	126.65	291.9	5.45	8	PVC	0.01	1,647	71	196	267	16.2	SM4	
Kirkland_Main-1084	Kirkland_Manholes-1796	160.8	Kirkland_Manholes-1797	142.57	315.3	5.78	8	PVC	0.01	1,695	67	180	247	14.5	SM4	
Kirkland_Main-1085	Kirkland_Manholes-1798	126.65	Kirkland_Manholes-1801	112.29	288.6	4.97	8	PVC	0.01	1,573	80	229	310	19.7	SM4	
Kirkland_Main-1086	Kirkland_Manholes-2191	134.63	Kirkland_Manholes-2190	132.39	117.1	1.91	8	PVC	0.01	975	5	17	22	2.2		
Kirkland_Main-1088	Kirkland_Manholes-2194	68	Kirkland_Manholes-2193	64.5	142	2.47	8	PVC	0.01	1,107	1	8	10	0.9	SM14-Ex-EX187	
Kirkland_Main-1089	Kirkland_Manholes-2193	64.5	Kirkland_Manholes-2145	63.1	194.7	0.72	8	PVC	0.01	598	8	41	50	8.3	SM14-Ex-EX187	
Kirkland_Main-1091	Kirkland_Manholes-2187	114.37	Kirkland_Manholes-2185	103.23	164.5	6.77	8	PVC	0.01	1,835	8	17	24	1.3	SM14-Ex-EX188	
Kirkland_Main-1092	Kirkland_Manholes-2185	103.23	Kirkland_Manholes-2184	75.09	227	12.4	8	PVC	0.01	2,482	40	66	106	4.3	SM14-Ex-EX188	
Kirkland_Main-1093	Kirkland_Manholes-2184	75.09	Kirkland_Manholes-2144	65.5	214.4	4.47	8	PVC	0.01	1,491	41	74	115	7.7	SM14-Ex-EX188	
Kirkland_Main-1094	Kirkland_Manholes-2199	42.12	Kirkland_Manholes-2201	34.26	130.3	6.03	8	PVC	0.01	1,731	55	7	62	3.6		
Kirkland_Main-1095	Kirkland_Manholes-2201	34.26	Kirkland_Manholes-2200	29.87	27.9	15.75	8	PVC	0.01	2,798	56	13	69	2.4		
Kirkland_Main-1096	Kirkland_Manholes-2098	53.6	Kirkland_Manholes-2097	45.25	198.1	4.22	8	PVC	0.01	1,448	3	7	10	0.7	SM14-Ex-EX233	
Kirkland_Main-1097	Kirkland_Manholes-2195	483.44	Kirkland_Manholes-2196	481.85	326.8	0.49	8	PVC	0.01	492	2	4	6	1.2		
Kirkland_Main-1098	Kirkland_Manholes-2196	481.85	Kirkland_Manholes-2197	480.89	188.7	0.51	8	PVC	0.01	503	3	9	11	2.2		
Kirkland_Main-1099	Kirkland_Manholes-2111	59.56	Kirkland_Manholes-2099	57.72	398	0.46	12	PVC	0.01	1,413	115	198	313	22.1	SM14-Ex-EX222	
Kirkland_Main-1100	Kirkland_Manholes-2100	58.67	Kirkland_Manholes-2099	57.72	62.5	1.52	8	PVC	0.01	869	13	19	31	3.6	SM14-Ex-EX234	
Kirkland_Main-1101	Kirkland_Manholes-2101	73.68	Kirkland_Manholes-2100	58.67	124.9	12.02	8	PVC	0.01	2,444	11	12	24	1		
Kirkland_Main-1102	Kirkland_Manholes-2102	127.52	Kirkland_Manholes-2101	73.68	250.6	21.48	8	PVC	0.01	3,268	6	6	12	0.4		
Kirkland_Main-1104	Kirkland_Manholes-2103	51.49	Kirkland_Manholes-2104	41.29	235.7	4.33	8	PVC	0.01	1,467	1	7	8	0.5	SM14-Ex-EX231	
Kirkland_Main-1105	Kirkland_Manholes-2447	28.08	Kirkland_Manholes-2448	25.41	138	1.94	12	PVC	0.01	2,892	2	7	8	0.3		
Kirkland_Main-1106	Kirkland_Manholes-2448	25.41	Kirkland_Manholes-2451	24.29	346.6	0.32	12	PVC	0.01	1,182	14	20	34	2.9		
Kirkland_Main-1107	Kirkland_Manholes-2449	27.6	Kirkland_Manholes-2448	25.41	29.8	7.34	8	PVC	0.01	1,910	11	7	17	0.9		
Kirkland_Main-1108	Kirkland_Manholes-2450	27.97	Kirkland_Manholes-2451	24.29	50.3	7.31	8	PVC	0.01	1,906	2	13	15	0.8		
Kirkland_Main-1109	Kirkland_Manholes-2491	35.69	Kirkland_Manholes-2450	27.97	197.9	3.9	8	PVC	0.01	1,393	1	7	8	0.6	SM14-Ex-EX278	
Kirkland_Main-1110	Kirkland_Manholes-2451	24.29	Kirkland_Manholes-2452	24.18	330.9	0.03	12	PVC	0.01	374	17	39	56	15		
Kirkland_Main-1111	Kirkland_Manholes-2452	24.18	Kirkland_Manholes-2454	23.57	255.1	0.24	12	PVC	0.01	1,016	27	59	85	8.4		
Kirkland_Main-1112	Kirkland_Manholes-2453	27.74	Kirkland_Manholes-2452	24.18	62.2	5.72	8	PVC	0.01	1,686	9	13	22	1.3		
Kirkland_Main-1113	Kirkland_Manholes-2093	44.98	Kirkland_Manholes-2453	27.74	236.1	7.3	8	PVC	0.01	1,905	8	7	14	0.8	SM14-Ex-EX276	
Kirkland_Main-1114	Kirkland_Manholes-2097	45.25	Kirkland_Manholes-2455	44.41	209.1	0.4	8	PVC	0.01	446	13	13	26	5.9	SM14-Ex-EX233	Drop Connection
Kirkland_Main-1115	Kirkland_Manholes-2455	26.2	Kirkland_Manholes-2454	23.57	36.4	7.21	8	PVC	0.01	1,893	15	20	35	1.8	SM14-Ex-EX233	
Kirkland_Main-1116	Kirkland_Manholes-2454	23.57	Kirkland_Manholes-2456	21.67	413.5	0.46	12	PVC	0.01	1,410	42	85	126	8.9		
Kirkland_Main-1117	Kirkland_Manholes-2457	26.27	Kirkland_Manholes-2456	21.67	49.5	9.28	8	PVC	0.01	2,148	9	20	29	1.3		
Kirkland_Main-1118	Kirkland_Manholes-2202	26.91	Kirkland_Manholes-2305	25.32	49.2	3.23	8	PVC	0.01	1,266	56	26	82	6.5		Drop Connection

2035 (20-year) with Proposed Improvements - Peak Hour Flow - Pipe Capacity Table

Label	Upstream Node	Upstream Invert Elevation (ft)	Downstream Node	Downstream Invert Elevation (ft)	Length (ft)	Slope (%)	Diameter (in)	Material	Manning's n	Design Capacity (gpm)	Domestic Flow (gpm)	I/I Flow (gpm)	Total Flow (gpm)	Percent Full (%)	CIP No.	Notes
Kirkland_Main-1119	Kirkland_Manholes-2205	23.1	Kirkland_Manholes-2306	15.63	44.6	16.73	8	PVC	0.01	2,884	8	33	40	1.4		Drop Connection
Kirkland_Main-1120	Kirkland_Manholes-2306	15.63	Kirkland_Manholes-2305	15.26	357	0.1	21	PVC	0.01	2,976	291	644	935	31.4		
Kirkland_Main-1121	Kirkland_Manholes-2307	15.73	Kirkland_Manholes-2306	15.63	136.3	0.07	21	PVC	0.01	2,504	283	605	888	35.4		
Kirkland_Main-1122	Kirkland_Manholes-2217	22.48	Kirkland_Manholes-2308	22.33	38	0.4	8	PVC	0.01	446	13	39	52	11.6		Drop Connection
Kirkland_Main-1123	Kirkland_Manholes-2308	15.98	Kirkland_Manholes-2307	15.73	271.4	0.09	21	PVC	0.01	2,806	274	598	872	31.1		
Kirkland_Main-1124	Kirkland_Manholes-2309	16.24	Kirkland_Manholes-2308	15.98	211.8	0.12	21	PVC	0.01	3,239	259	553	811	25		
Kirkland_Main-1125	Kirkland_Manholes-2313	16.39	Kirkland_Manholes-2309	16.24	162.2	0.09	21	PVC	0.01	2,811	253	546	799	28.4		
Kirkland_Main-1126	Kirkland_Manholes-2314	16.65	Kirkland_Manholes-2313	16.39	183.4	0.14	21	PVC	0.01	3,481	236	501	736	21.1		
Kirkland_Main-1127	Kirkland_Manholes-2315	16.77	Kirkland_Manholes-2314	16.65	235.7	0.05	21	PVC	0.01	2,086	213	416	629	30.2		
Kirkland_Main-1128	Kirkland_Manholes-2316	17.03	Kirkland_Manholes-2315	16.77	315.7	0.08	21	PVC	0.01	2,653	213	410	623	23.5		
Kirkland_Main-1129	Kirkland_Manholes-2317	17.2	Kirkland_Manholes-2316	17.03	183.4	0.09	21	PVC	0.01	2,815	202	403	605	21.5		
Kirkland_Main-1130	Kirkland_Manholes-2155	23.66	Kirkland_Manholes-2318	17.6	47.1	12.87	8	PVC	0.01	2,530	56	98	154	6.1		
Kirkland_Main-1131	Kirkland_Manholes-2318	17.6	Kirkland_Manholes-2317	17.2	364	0.11	21	PVC	0.01	3,053	193	390	583	19.1		
Kirkland_Main-1132	Kirkland_Manholes-2319	17.7	Kirkland_Manholes-2318	17.6	48.4	0.21	21	PVC	0.01	4,200	135	280	414	9.9		
Kirkland_Main-1136	Kirkland_Manholes-2874	209.8	Kirkland_Manholes-2873	208.01	164.9	1.09	8	PVC	0.01	735	0	4	5	0.6		
Kirkland_Main-1137	Kirkland_Manholes-2873	208.01	Kirkland_Manholes-2872	207.03	88.7	1.1	8	PVC	0.01	741	1	9	9	1.2		
Kirkland_Main-1138	Kirkland_Manholes-2872	207.03	Kirkland_Manholes-2871	205.15	113.5	1.66	8	PVC	0.01	907	1	17	18	2		
Kirkland_Main-1139	Kirkland_Manholes-2871	205.15	Kirkland_Manholes-2869	204.84	44.2	0.7	8	PVC	0.01	591	2	21	23	3.9		
Kirkland_Main-1140	Kirkland_Manholes-2869	204.84	Kirkland_Manholes-2870	201.21	123.4	2.94	18	PVC	0.01	10,510	873	2,228	3,101	29.5		
Kirkland_Main-1141	Kirkland_Manholes-2870	201.21	Kirkland_Manholes-1103	198.97	205	1.09	18	PVC	0.01	6,407	873	2,232	3,105	48.5		
Kirkland_Main-1142	Kirkland_Manholes-2875	310.11	Kirkland_Manholes-898	306.89	269.8	1.19	8	PVC	0.01	770	0	4	5	0.6		
Kirkland_Main-1143	Kirkland_Manholes-2475	210.58	Kirkland_Manholes-2477	189.6	360	5.83	8	PVC	0.01	1,702	3	4	7	0.4	SM14-Ex-EX241	
Kirkland_Main-1144	Kirkland_Manholes-2478	190.32	Kirkland_Manholes-2477	189.6	67.1	1.07	8	PVC	0.01	730	1	4	6	0.8	SM14-Ex-EX241	
Kirkland_Main-1145	Kirkland_Manholes-2477	189.6	Kirkland_Manholes-2479	186.26	224.2	1.49	8	PVC	0.01	861	5	13	18	2.1	SM14-Ex-EX241	
Kirkland_Main-1146	Kirkland_Manholes-2479	186.26	Kirkland_Manholes-2482	184.91	81	1.67	8	PVC	0.01	910	9	26	35	3.8		
Kirkland_Main-1147	Kirkland_Manholes-2480	187.23	Kirkland_Manholes-2479	186.26	143.4	0.68	8	PVC	0.01	580	3	9	12	2.1	SM14-Ex-EX241	
Kirkland_Main-1148	Kirkland_Manholes-2489	190.15	Kirkland_Manholes-2480	187.23	230.1	1.27	8	PVC	0.01	794	1	4	5	0.7	SM14-Ex-EX241	
Kirkland_Main-1149	Kirkland_Manholes-2481	184.88	Kirkland_Manholes-2490	173.27	348.4	3.33	8	PVC	0.01	1,287	3	4	7	0.5	SM14-Ex-EX242	
Kirkland_Main-1150	Kirkland_Manholes-2482	184.91	Kirkland_Manholes-2483	165.54	140.6	13.78	8	PVC	0.01	2,617	11	30	41	1.6		
Kirkland_Main-1152	Kirkland_Manholes-2483	165.54	Kirkland_Manholes-2488	154.5	273.8	4.03	8	PVC	0.01	1,416	12	34	47	3.3		
Kirkland_Main-1153	Kirkland_Manholes-2488	154.5	Kirkland_Manholes-2487	153.78	111.9	0.64	8	PVC	0.01	566	14	39	53	9.4		
Kirkland_Main-1154	Kirkland_Manholes-2490	173.27	Kirkland_Manholes-2485	153.26	284.1	7.04	8	PVC	0.01	1,871	33	82	115	6.1	SM14-Ex-EX242	
Kirkland_Main-1156	Kirkland_Manholes-2484	189.79	Kirkland_Manholes-2485	153.26	364.5	10.02	8	PVC	0.01	2,232	3	4	7	0.3	SM14-Ex-EX239	
Kirkland_Main-1157	Kirkland_Manholes-2487	153.78	Kirkland_Manholes-2486	152.49	105	1.23	8	PVC	0.01	782	15	43	58	7.4		
Kirkland_Main-1158	Kirkland_Manholes-2485	153.26	Kirkland_Manholes-2486	152.49	113.6	0.68	8	PVC	0.01	580	38	90	128	22	SM14-Ex-EX239	
Kirkland_Main-1159	Kirkland_Manholes-1429	514.5	Kirkland_Manholes-1427	513.21	125.2	1.03	8	PVC	0.01	715	6	17	23	3.2		
Kirkland_Main-1160	Kirkland_Manholes-1427	513.21	Kirkland_Manholes-1428	512.46	129.3	0.58	8	PVC	0.01	537	9	26	35	6.5		
Kirkland_Main-1161	Kirkland_Manholes-1428	512.46	Kirkland_Manholes-1434	511.6	190.6	0.45	8	PVC	0.01	474	11	30	41	8.6		
Kirkland_Main-1162	Kirkland_Manholes-1430	516.64	Kirkland_Manholes-1429	514.5	144.2	1.48	8	PVC	0.01	859	5	13	17	2		
Kirkland_Main-1164	Kirkland_Manholes-2175	133.14	Kirkland_Manholes-2174	132.67	117.8	0.4	8	PVC	0.01	446	2	8	10	2.3		
Kirkland_Main-1165	Kirkland_Manholes-2174	132.67	Kirkland_Manholes-2173	131.99	11.1	6.13	8	PVC	0.01	1,745	4	17	20	1.2		
Kirkland_Main-1166	Kirkland_Manholes-2173	131.99	Kirkland_Manholes-2172	130.6	348.2	0.4	8	PVC	0.01	446	27	25	52	11.7	SM14-Ex-EX192	Drop Connection
Kirkland_Main-1167	Kirkland_Manholes-2172	107.91	Kirkland_Manholes-2163	75.42	383.7	8.47	8	PVC	0.01	2,052	30	33	63	3.1	SM14-Ex-EX192	
Kirkland_Main-1168	Kirkland_Manholes-2163	75.42	Kirkland_Manholes-2141	73.53	47.4	3.99	8	PVC	0.01	1,408	31	41	72	5.1		
Kirkland_Main-1169	Kirkland_Manholes-2183	146.45	Kirkland_Manholes-2182	136.23	145.7	7.02	8	PVC	0.01	1,868	1	8	9	0.5		
Kirkland_Main-1170	Kirkland_Manholes-2182	136.23	Kirkland_Manholes-2181	133.52	88.2	3.07	8	PVC	0.01	1,236	2	17	18	1.5		
Kirkland_Main-1171	Kirkland_Manholes-2181	133.52	Kirkland_Manholes-2180	125.44	163.5	4.94	8	PVC	0.01	1,567	3	25	28	1.8		
Kirkland_Main-1172	Kirkland_Manholes-2180	125.44	Kirkland_Manholes-2179	120.67	330.4	1.44	8	PVC	0.01	847	6	33	39	4.6		
Kirkland_Main-1173	Kirkland_Manholes-2179	120.67	Kirkland_Manholes-2178	102.28	199.5	9.22	8	PVC	0.01	2,140	9	41	51	2.4		
Kirkland_Main-1174	Kirkland_Manholes-2178	102.28	Kirkland_Manholes-2177	75.93	214.6	12.28	8	PVC	0.01	2,471	11	50	60	2.4		
Kirkland_Main-1175	Kirkland_Manholes-2177	75.93	Kirkland_Manholes-2176	70.83	149.4	3.41	8	PVC	0.01	1,303	11	58	69	5.3		
Kirkland_Main-1176	Kirkland_Manholes-2176	70.83	Kirkland_Manholes-2142	68.99	36.2	5.08	8	PVC	0.01	1,589	12	66	78	4.9		
Kirkland_Main-1177	Kirkland_Manholes-2366	292.68	Kirkland_Manholes-2365	289.93	42.5	6.47	8	PVC	0.01	1,794	33	86	119	6.7	SM14-Ex-EX260	
Kirkland_Main-1178	Kirkland_Manholes-2368	290.87	Kirkland_Manholes-2365	289.93	48.6	1.94	8	PVC	0.01	981	2	4	6	0.6		
Kirkland_Main-1179	Kirkland_Manholes-2372	304.48	Kirkland_Manholes-2371	291.2	253.9	5.23	8	PVC	0.01	1,613	19	47	66	4.1	SM14-Ex-EX257	
Kirkland_Main-1180	Kirkland_Manholes-2378	312.05	Kirkland_Manholes-2372	304.48	224.1	3.38	8	PVC	0.01	1,296	13	26	39	3	SM14-Ex-EX257	
Kirkland_Main-1181	Kirkland_Manholes-2373	306.85	Kirkland_Manholes-2372	304.48	403.1	0.59	8	PVC	0.01	541	3	9	12	2.2	SM14-Ex-EX258	
Kirkland_Main-1182	Kirkland_Manholes-2374	307.1	Kirkland_Manholes-2373	306.85	109.8	0.23	8	PVC	0.01	336	2	4	6	1.8	SM14-Ex-EX258	
Kirkland_Main-1183	Kirkland_Manholes-2376	359.31	Kirkland_Manholes-2375	323.76	368.2	9.66	8	PVC	0.01	2,191	5	4	10	0.4	SM14-Ex-EX259	
Kirkland_Main-1184	Kirkland_Manholes-2375	323.76	Kirkland_Manholes-2377	320.51	173.5	1.87	8	PVC	0.01	965	7	9	16	1.6	SM14-Ex-EX259	
Kirkland_Main-1185	Kirkland_Manholes-2377	320.51	Kirkland_Manholes-2378	312.05	352.3	2.4	8	PVC	0.01	1,093	10	13	22	2.1	SM14-Ex-EX259	
Kirkland_Main-1186	Kirkland_Manholes-2379	312.61	Kirkland_Manholes-2378	312.05	23.8	2.35	8	PVC	0.01	1,081	3	9	11	1	SM14-Ex-EX257	

2035 (20-year) with Proposed Improvements - Peak Hour Flow - Pipe Capacity Table

Label	Upstream Node	Upstream Invert Elevation (ft)	Downstream Node	Downstream Invert Elevation (ft)	Length (ft)	Slope (%)	Diameter (in)	Material	Manning's n	Design Capacity (gpm)	Domestic Flow (gpm)	I/I Flow (gpm)	Total Flow (gpm)	Percent Full (%)	CIP No.	Notes
Kirkland_Main-1187	Kirkland_Manholes-2380	290.72	Kirkland_Manholes-2430	273.69	397.1	4.29	8	PVC	0.01	1,460	3	9	12	0.8	SM14-Ex-EX286	
Kirkland_Main-1188	Kirkland_Manholes-2381	293.12	Kirkland_Manholes-2380	290.72	144.3	1.66	8	PVC	0.01	909	2	4	6	0.7	SM14-Ex-EX286	
Kirkland_Main-1189	Kirkland_Manholes-2385	343.75	Kirkland_Manholes-2383	328.5	173.4	8.79	8	PVC	0.01	2,091	11	26	37	1.8	SM14-Ex-EX260	
Kirkland_Main-1190	Kirkland_Manholes-2384	330.79	Kirkland_Manholes-2383	328.5	64.4	3.56	8	PVC	0.01	1,330	14	34	48	3.6	SM14-Ex-EX287	
Kirkland_Main-1191	Kirkland_Manholes-2395	331.59	Kirkland_Manholes-2384	330.79	136.8	0.58	8	PVC	0.01	539	13	30	43	7.9	SM14-Ex-EX287	
Kirkland_Main-1192	Kirkland_Manholes-2386	373.02	Kirkland_Manholes-2385	343.75	310.7	9.42	8	PVC	0.01	2,164	10	21	31	1.4	SM14-Ex-EX260	
Kirkland_Main-1193	Kirkland_Manholes-2387	380.46	Kirkland_Manholes-2386	373.02	399.9	1.86	8	PVC	0.01	962	8	17	25	2.6	SM14-Ex-EX260	
Kirkland_Main-1194	Kirkland_Manholes-2388	388.18	Kirkland_Manholes-2387	380.46	279.2	2.76	8	PVC	0.01	1,172	5	13	18	1.5	SM14-Ex-EX260	
Kirkland_Main-1195	Kirkland_Manholes-2533	389.33	Kirkland_Manholes-2388	388.18	396.1	0.29	8	PVC	0.01	380	3	9	11	3	SM14-Ex-EX260	
Kirkland_Main-1196	Kirkland_Manholes-2389	365.8	Kirkland_Manholes-2390	359.58	183.8	3.38	8	PVC	0.01	1,297	3	4	7	0.6	SM14-Ex-EX287	
Kirkland_Main-1197	Kirkland_Manholes-2390	359.58	Kirkland_Manholes-2391	347.6	291	4.12	8	PVC	0.01	1,430	5	9	14	1	SM14-Ex-EX287	
Kirkland_Main-1198	Kirkland_Manholes-2391	347.6	Kirkland_Manholes-2392	345.7	123.7	1.54	8	PVC	0.01	874	8	13	21	2.4	SM14-Ex-EX287	
Kirkland_Main-1199	Kirkland_Manholes-2392	345.7	Kirkland_Manholes-2393	339.78	135.6	4.36	8	PVC	0.01	1,473	9	17	26	1.8	SM14-Ex-EX287	
Kirkland_Main-1200	Kirkland_Manholes-2411	259.15	Kirkland_Manholes-2413	251.1	165.8	4.86	8	PVC	0.01	1,554	36	86	122	7.8		
Kirkland_Main-1201	Kirkland_Manholes-2419	203.52	Kirkland_Manholes-2303	195.57	329.3	2.41	12	PVC	0.01	3,230	382	627	1,009	31.2	SM2	
Kirkland_Main-1202	Kirkland_Manholes-2418	218.73	Kirkland_Manholes-2419	203.52	222.4	6.84	12	PVC	0.01	5,436	372	622	994	18.3	SM2	
Kirkland_Main-1203	Kirkland_Manholes-2417	230.48	Kirkland_Manholes-2418	218.73	175.2	6.71	12	PVC	0.01	5,384	313	455	768	14.3	SM2	
Kirkland_Main-1204	Kirkland_Manholes-2416	242.81	Kirkland_Manholes-2417	230.48	262.7	4.69	12	PVC	0.01	4,503	310	451	761	16.9	SM2	
Kirkland_Main-1205	Kirkland_Manholes-2420	230.11	Kirkland_Manholes-2418	218.73	227.2	5.01	8	PVC	0.01	1,578	58	163	221	14	SM14-Ex-EX251	
Kirkland_Main-1206	Kirkland_Manholes-2415	247.52	Kirkland_Manholes-2416	242.81	265.9	1.77	12	PVC	0.01	2,766	307	446	754	27.2	SM2	
Kirkland_Main-1207	Kirkland_Manholes-2720	32.22	Kirkland_Manholes-2719	31.99	57.5	0.4	8	PVC	0.01	446	85	6	91	20.4		
Kirkland_Main-1208	Kirkland_Manholes-2414	248.96	Kirkland_Manholes-2415	247.52	131.3	1.1	12	PVC	0.01	2,177	306	442	748	34.4	SM2	
Kirkland_Main-1209	Kirkland_Manholes-2413	251.1	Kirkland_Manholes-2414	248.96	118.1	1.81	12	PVC	0.01	2,798	305	438	743	26.5	SM2	
Kirkland_Main-1210	Kirkland_Manholes-2421	253.02	Kirkland_Manholes-2413	251.1	118.9	1.61	12	PVC	0.01	2,641	268	348	616	23.3	SM2	
Kirkland_Main-1211	Kirkland_Manholes-2422	254.09	Kirkland_Manholes-2421	253.02	92.9	1.15	12	PVC	0.01	2,230	264	339	603	27	SM2	
Kirkland_Main-1212	Kirkland_Manholes-2424	257.66	Kirkland_Manholes-2422	254.09	323.2	1.1	12	PVC	0.01	2,185	263	335	597	27.3	SM2	
Kirkland_Main-1213	Kirkland_Manholes-2879	68.04	Kirkland_Manholes-2492	55.46	56.8	22.14	8	PVC	0.01	3,317	35	43	79	2.4		
Kirkland_Main-1214	Kirkland_Manholes-2091	57.76	Kirkland_Manholes-2090	57.52	58.9	0.4	8	PVC	0.01	446	5	12	17	3.9	SM14-Ex-EX279	Drop Connection
Kirkland_Main-1215	Kirkland_Manholes-2094	57.58	Kirkland_Manholes-2090	57.44	314.4	0.04	15	PVC	0.01	795	135	242	377	47.4	SM14-Ex-EX222	
Kirkland_Main-1216	Kirkland_Manholes-2092	79.95	Kirkland_Manholes-2091	79.51	110.7	0.4	8	PVC	0.01	446	3	6	10	2.1	SM14-Ex-EX279	Drop Connection
Kirkland_Main-1218	Kirkland_Manholes-2095	60.47	Kirkland_Manholes-2094	57.58	55.7	5.18	8	PVC	0.01	1,605	5	12	17	1.1	SM14-Ex-EX277	
Kirkland_Main-1219	Kirkland_Manholes-2096	71.29	Kirkland_Manholes-2095	60.47	119	9.09	8	PVC	0.01	2,126	3	6	10	0.5	SM14-Ex-EX277	
Kirkland_Main-1220	Kirkland_Manholes-2099	57.72	Kirkland_Manholes-2094	57.58	259	0.05	12	PVC	0.01	483	129	223	352	72.8	SM14-Ex-EX222	
Kirkland_Main-1223	Kirkland_Manholes-2614	304.78	Kirkland_Manholes-2615	302.07	237.1	1.14	8	PVC	0.01	754	51	112	163	21.6	SM14-Ex-EX299	
Kirkland_Main-1224	Kirkland_Manholes-2615	302.07	Kirkland_Manholes-2618	301.8	67.7	0.4	8	PVC	0.01	446	52	116	168	37.6	SM14-Ex-EX299	Drop Connection
Kirkland_Main-1225	Kirkland_Manholes-2618	278.4	Kirkland_Manholes-2617	276.43	274.1	0.72	8	PVC	0.01	598	58	129	187	31.3	SM2	
Kirkland_Main-1226	Kirkland_Manholes-2617	276.43	Kirkland_Manholes-2616	275.44	246.8	0.4	8	PVC	0.01	446	77	133	210	47.1	SM2	Drop Connection
Kirkland_Main-1227	Kirkland_Manholes-2616	274.02	Kirkland_Manholes-2619	272.54	173.9	0.85	8	PVC	0.01	650	148	163	311	47.8	SM2	
Kirkland_Main-1228	Kirkland_Manholes-2619	272.54	Kirkland_Manholes-2428	270.37	122.7	1.77	8	PVC	0.01	937	148	167	316	33.7	SM2	
Kirkland_Main-1229	Kirkland_Manholes-407	266.31	Kirkland_Manholes-409	264.84	123.1	1.19	8	PVC	0.01	771	3	9	12	1.5		
Kirkland_Main-1230	Kirkland_Manholes-409	264.84	Kirkland_Manholes-419	263.82	78.4	1.3	8	PVC	0.01	804	5	17	23	2.8		
Kirkland_Main-1231	Kirkland_Manholes-411	265.96	Kirkland_Manholes-412	253.7	218.8	5.6	8	PVC	0.01	1,669	2	4	6	0.4		
Kirkland_Main-1232	Kirkland_Manholes-412	253.7	Kirkland_Manholes-413	252.76	178.3	0.53	8	PVC	0.01	512	3	9	11	2.2		
Kirkland_Main-1233	Kirkland_Manholes-413	252.76	Kirkland_Manholes-414	251.5	46.6	2.7	8	PVC	0.01	1,159	4	13	17	1.4		
Kirkland_Main-1234	Kirkland_Manholes-414	251.5	Kirkland_Manholes-415	250.52	65.4	1.5	8	PVC	0.01	863	4	17	22	2.5		
Kirkland_Main-1235	Kirkland_Manholes-415	250.52	Kirkland_Manholes-416	248.58	58.4	3.32	8	PVC	0.01	1,285	5	21	27	2.1		
Kirkland_Main-1236	Kirkland_Manholes-416	248.58	Kirkland_Manholes-417	237.12	157.3	7.28	8	PVC	0.01	1,903	7	26	33	1.7		
Kirkland_Main-1237	Kirkland_Manholes-417	237.12	Kirkland_Manholes-2767	236.02	47.6	2.31	8	PVC	0.01	1,071	8	30	38	3.5		
Kirkland_Main-1238	Kirkland_Manholes-2767	236.02	Kirkland_Manholes-418	235.93	86.7	0.1	8	PVC	0.01	227	8	34	43	18.7		
Kirkland_Main-1239	Kirkland_Manholes-408	267.9	Kirkland_Manholes-407	266.31	113.3	1.4	8	PVC	0.01	835	1	4	6	0.7		
Kirkland_Main-1240	Kirkland_Manholes-419	263.82	Kirkland_Manholes-625	258	200	2.91	8	PVC	0.01	1,203	7	21	28	2.3		
Kirkland_Main-1241	Kirkland_Manholes-420	281.46	Kirkland_Manholes-1071	277.81	358.8	1.02	8	PVC	0.01	711	11	39	50	7		
Kirkland_Main-1242	Kirkland_Manholes-418	235.93	Kirkland_Manholes-421	235.77	9.8	1.63	8	PVC	0.01	901	9	39	47	5.3		
Kirkland_Main-1243	Kirkland_Manholes-422	235.64	Kirkland_Manholes-341	235.59	30.3	0.17	8	PVC	0.01	287	10	47	57	20	SM14-Ex-EX49	
Kirkland_Main-1244	Kirkland_Manholes-421	235.77	Kirkland_Manholes-422	235.64	135.2	0.1	8	PVC	0.01	219	10	43	53	24.1	SM14-Ex-EX49	
Kirkland_Main-1245	Kirkland_Manholes-423	284.5	Kirkland_Manholes-420	281.46	237.1	1.28	8	PVC	0.01	798	1	4	5	0.7		
Kirkland_Main-1246	Kirkland_Manholes-424	292.81	Kirkland_Manholes-425	290.3	45.2	5.56	8	PVC	0.01	1,662	8	26	34	2		
Kirkland_Main-1247	Kirkland_Manholes-1846	15.1	Kirkland_Manholes-1845	14.95	208.8	0.07	12	PVC	0.01	557	7	33	39	7	SM10	
Kirkland_Main-1248	Kirkland_Manholes-1845	14.95	Kirkland_Manholes-1844	14.08	225.8	0.39	12	PVC	0.01	1,290	7	39	46	3.6	SM10	
Kirkland_Main-1249	Kirkland_Manholes-1844	14.08	Kirkland_Manholes-1843	13.9	253.8	0.07	12	PVC	0.01	554	9	46	55	9.9	SM10	
Kirkland_Main-1250	Kirkland_Manholes-1843	13.9	Kirkland_Manholes-1842	13.84	237.6	0.03	12	PVC	0.01	330	10	52	62	18.8	SM10	
Kirkland_Main-1251	Kirkland_Manholes-1842	13.84	Kirkland_Manholes-1841	13.3	228.3	0.24	12	PVC	0.01	1,011	11	59	70	6.9	SM10	

2035 (20-year) with Proposed Improvements - Peak Hour Flow - Pipe Capacity Table

Label	Upstream Node	Upstream Invert Elevation (ft)	Downstream Node	Downstream Invert Elevation (ft)	Length (ft)	Slope (%)	Diameter (in)	Material	Manning's n	Design Capacity (gpm)	Domestic Flow (gpm)	I/I Flow (gpm)	Total Flow (gpm)	Percent Full (%)	CIP No.	Notes
Kirkland_Main-1252	Kirkland_Manholes-1840	12.98	Kirkland_Manholes-1839	12.1	208.1	0.42	12	PVC	0.01	1,352	18	72	89	6.6	SM10	
Kirkland_Main-1253	Kirkland_Manholes-1839	12.1	Kirkland_Manholes-1838	12	159.4	0.06	12	PVC	0.01	521	18	78	96	18.4		
Kirkland_Main-1254	Kirkland_Manholes-1838	12	Kirkland_Manholes-1834	11.35	218.3	0.3	12	PVC	0.01	1,134	19	85	104	9.1		
Kirkland_Main-1255	Kirkland_Manholes-1841	13.3	Kirkland_Manholes-1840	12.98	311	0.1	12	PVC	0.01	667	12	65	77	11.6	SM10	
Kirkland_Main-1256	Kirkland_Manholes-1854	359.04	Kirkland_Manholes-1855	357.41	200.3	0.81	8	PVC	0.01	636	0	4	5	0.7		
Kirkland_Main-1257	Kirkland_Manholes-1855	357.41	Kirkland_Manholes-1856	346.8	232	4.57	8	PVC	0.01	1,508	1	9	9	0.6		
Kirkland_Main-1258	Kirkland_Manholes-1856	346.8	Kirkland_Manholes-1857	344.14	121.8	2.18	8	PVC	0.01	1,042	8	13	21	2		
Kirkland_Main-1259	Kirkland_Manholes-1857	344.14	Kirkland_Manholes-1858	335.71	162.8	5.18	8	PVC	0.01	1,605	9	17	26	1.6		
Kirkland_Main-1260	Kirkland_Manholes-1858	335.71	Kirkland_Manholes-1859	326.96	255.9	3.42	8	PVC	0.01	1,304	82	124	206	15.8		
Kirkland_Main-1261	Kirkland_Manholes-1963	340.77	Kirkland_Manholes-1858	335.71	100.1	5.06	8	PVC	0.01	1,585	70	103	173	10.9		
Kirkland_Main-1262	Kirkland_Manholes-1859	326.96	Kirkland_Manholes-1860	317.11	345	2.85	8	PVC	0.01	1,191	82	129	211	17.7		
Kirkland_Main-1263	Kirkland_Manholes-1860	317.11	Kirkland_Manholes-1861	303.96	398.6	3.3	8	PVC	0.01	1,281	83	133	216	16.9		
Kirkland_Main-1264	Kirkland_Manholes-1861	303.96	Kirkland_Manholes-1862	294.2	372.7	2.62	8	PVC	0.01	1,141	84	137	221	19.4		Drop Connection
Kirkland_Main-1265	Kirkland_Manholes-2394	354.21	Kirkland_Manholes-2393	339.78	142.1	10.15	8	PVC	0.01	2,247	2	4	6	0.3	SM14-Ex-EX287	
Kirkland_Main-1266	Kirkland_Manholes-2393	339.78	Kirkland_Manholes-2395	331.59	110.8	7.39	8	PVC	0.01	1,917	12	26	37	2	SM14-Ex-EX287	
Kirkland_Main-1267	Kirkland_Manholes-2405	418	Kirkland_Manholes-2397	417.95	35.5	0.14	8	PVC	0.01	265	10	30	40	15		
Kirkland_Main-1268	Kirkland_Manholes-2397	417.95	Kirkland_Manholes-2398	416.84	162.8	0.68	8	PVC	0.01	582	11	34	45	7.7	SM14-Ex-EX261	
Kirkland_Main-1269	Kirkland_Manholes-2404	419.23	Kirkland_Manholes-2405	418	199.9	0.62	8	PVC	0.01	553	8	26	33	6		
Kirkland_Main-1270	Kirkland_Manholes-2399	419.47	Kirkland_Manholes-2404	419.23	32.8	0.73	8	PVC	0.01	603	2	9	10	1.7		
Kirkland_Main-1271	Kirkland_Manholes-2403	420.2	Kirkland_Manholes-2404	419.23	274.8	0.35	8	PVC	0.01	419	5	13	18	4.2		
Kirkland_Main-1272	Kirkland_Manholes-2400	420.6	Kirkland_Manholes-2399	419.47	159	0.71	8	PVC	0.01	594	1	4	6	0.9		
Kirkland_Main-1273	Kirkland_Manholes-2402	421.38	Kirkland_Manholes-2403	420.2	252.3	0.47	8	PVC	0.01	482	4	9	12	2.5		
Kirkland_Main-1274	Kirkland_Manholes-2401	422.6	Kirkland_Manholes-2402	421.38	262.8	0.46	8	PVC	0.01	480	2	4	7	1.4		
Kirkland_Main-1276	Kirkland_Manholes-2398	416.84	Kirkland_Manholes-2406	412.88	316.7	1.25	8	PVC	0.01	788	13	39	51	6.5	SM14-Ex-EX261	
Kirkland_Main-1277	Kirkland_Manholes-2406	412.88	Kirkland_Manholes-2396	406.38	222.1	2.93	8	PVC	0.01	1,206	15	43	58	4.8	SM14-Ex-EX261	
Kirkland_Main-1278	Kirkland_Manholes-2396	406.38	Kirkland_Manholes-2407	403.31	84.2	3.65	8	PVC	0.01	1,346	17	47	64	4.8	SM14-Ex-EX261	
Kirkland_Main-1279	Kirkland_Manholes-2408	405.44	Kirkland_Manholes-2409	401.93	26.6	13.2	8	PVC	0.01	2,561	1	9	10	0.4		
Kirkland_Main-1281	Kirkland_Manholes-2409	401.93	Kirkland_Manholes-2267	393.07	194.4	4.56	8	PVC	0.01	1,505	2	13	15	1		
Kirkland_Main-1282	Kirkland_Manholes-2412	260.78	Kirkland_Manholes-2411	259.15	122.6	1.33	8	PVC	0.01	813	8	13	21	2.6		
Kirkland_Main-1283	Kirkland_Manholes-282	50.07	Kirkland_Manholes-281	36.84	240.3	5.51	8	PVC	0.01	1,654	2	10	12	0.7	SM10	
Kirkland_Main-1284	Kirkland_Manholes-284	50.6	Kirkland_Manholes-282	50.07	132.8	0.4	8	PVC	0.01	446	0	3	3	0.8		
Kirkland_Main-1285	Kirkland_Manholes-283	64.31	Kirkland_Manholes-282	50.07	115.4	12.34	8	PVC	0.01	2,477	2	3	5	0.2	SM10	
Kirkland_Main-1286	Kirkland_Manholes-273	69.52	Kirkland_Manholes-247	65.14	92.5	4.74	8	PVC	0.01	1,534	67	145	212	13.8	SM10	
Kirkland_Main-1290	Kirkland_Manholes-274	93.7	Kirkland_Manholes-271	91.78	250.2	0.77	8	PVC	0.01	618	48	100	148	23.9	SM10	
Kirkland_Main-1292	Kirkland_Manholes-277	72.24	Kirkland_Manholes-278	56.62	141.8	11.02	8	PVC	0.01	2,340	3	3	6	0.3	SM10	
Kirkland_Main-1293	Kirkland_Manholes-278	56.62	Kirkland_Manholes-280	27.37	245.1	11.93	8	PVC	0.01	2,436	36	13	49	2	SM10	
Kirkland_Main-1294	Kirkland_Manholes-276	92.16	Kirkland_Manholes-299	66.63	263.6	9.68	8	PVC	0.01	2,194	3	6	10	0.4	SM10	
Kirkland_Main-1295	Kirkland_Manholes-267	95.34	Kirkland_Manholes-275	94.08	184.4	0.68	8	PVC	0.01	583	45	91	136	23.3	SM10	
Kirkland_Main-1296	Kirkland_Manholes-275	94.08	Kirkland_Manholes-274	93.7	61.9	0.61	8	PVC	0.01	553	46	96	142	25.6	SM10	
Kirkland_Main-1297	Kirkland_Manholes-270	94.47	Kirkland_Manholes-271	91.78	344.2	0.78	8	PVC	0.01	623	13	31	45	7.1	SM10	
Kirkland_Main-1298	Kirkland_Manholes-269	103.08	Kirkland_Manholes-270	94.47	190.8	4.51	8	PVC	0.01	1,498	9	27	36	2.4	SM10	
Kirkland_Main-1299	Kirkland_Manholes-268	108.82	Kirkland_Manholes-269	103.08	133.1	4.31	8	PVC	0.01	1,464	7	22	29	2	SM10	
Kirkland_Main-1300	Kirkland_Manholes-2521	363.83	Kirkland_Manholes-2525	348.63	167.1	9.09	8	PVC	0.01	2,126	3	9	11	0.5		
Kirkland_Main-1301	Kirkland_Manholes-2519	384.75	Kirkland_Manholes-2522	362.4	159.7	13.99	8	PVC	0.01	2,637	2	4	6	0.2		
Kirkland_Main-1302	Kirkland_Manholes-2522	362.4	Kirkland_Manholes-2523	357.31	64.3	7.92	8	PVC	0.01	1,984	2	9	11	0.6		
Kirkland_Main-1303	Kirkland_Manholes-2523	357.31	Kirkland_Manholes-2524	346.56	113.2	9.5	8	PVC	0.01	2,173	3	13	17	0.8		
Kirkland_Main-1304	Kirkland_Manholes-2524	346.56	Kirkland_Manholes-2527	340.94	187	3.01	8	PVC	0.01	1,222	41	57	97	8		
Kirkland_Main-1305	Kirkland_Manholes-2526	336.85	Kirkland_Manholes-2776	334.45	375.1	0.64	8	PVC	0.01	564	55	148	203	36		
Kirkland_Main-1306	Kirkland_Manholes-2527	340.94	Kirkland_Manholes-2526	336.85	509.8	0.8	8	PVC	0.01	631	54	144	198	31.4		
Kirkland_Main-1307	Kirkland_Manholes-2525	348.63	Kirkland_Manholes-2527	340.94	406	1.89	8	PVC	0.01	970	13	83	96	9.9		
Kirkland_Main-1308	Kirkland_Manholes-2528	359.11	Kirkland_Manholes-2525	348.63	235.4	4.45	8	PVC	0.01	1,488	10	70	80	5.4		
Kirkland_Main-1309	Kirkland_Manholes-2529	365.07	Kirkland_Manholes-2528	362.98	40.4	5.17	8	PVC	0.01	1,604	9	65	75	4.7		Drop Connection
Kirkland_Main-1310	Kirkland_Manholes-2531	381.45	Kirkland_Manholes-2529	365.07	303.2	5.4	8	PVC	0.01	1,639	9	61	71	4.3		
Kirkland_Main-1311	Kirkland_Manholes-2530	382.12	Kirkland_Manholes-2531	381.45	45.8	1.46	8	PVC	0.01	853	9	57	66	7.8		
Kirkland_Main-1312	Kirkland_Manholes-2532	395.91	Kirkland_Manholes-2530	382.12	311	4.43	8	PVC	0.01	1,485	8	52	60	4		
Kirkland_Main-1313	Kirkland_Manholes-2534	391.7	Kirkland_Manholes-2533	389.33	214.8	1.1	8	PVC	0.01	741	1	4	6	0.8	SM14-Ex-EX260	
Kirkland_Main-1315	Kirkland_Manholes-2535	407.5	Kirkland_Manholes-2536	406.16	143.7	0.93	8	PVC	0.01	681	15	4	19	2.8		
Kirkland_Main-1316	Kirkland_Manholes-2536	406.16	Kirkland_Manholes-2537	404.02	173.1	1.24	8	PVC	0.01	784	20	9	29	3.6		
Kirkland_Main-1317	Kirkland_Manholes-2537	404.02	Kirkland_Manholes-2538	403.64	31.1	1.22	8	PVC	0.01	780	20	13	33	4.3		
Kirkland_Main-1318	Kirkland_Manholes-2541	412.62	Kirkland_Manholes-2538	403.64	249.5	3.6	8	PVC	0.01	1,338	6	13	19	1.4	SM14-Ex-EX299	
Kirkland_Main-1320	Kirkland_Manholes-2538	403.64	Kirkland_Manholes-2542	402.84	199.8	0.4	8	PVC	0.01	446	28	30	58	13	SM14-Ex-EX299	
Kirkland_Main-1321	Kirkland_Manholes-2539	420.17	Kirkland_Manholes-2540	419.4	116.4	0.66	8	PVC	0.01	574	3	4	7	1.2	SM14-Ex-EX299	

2035 (20-year) with Proposed Improvements - Peak Hour Flow - Pipe Capacity Table

Label	Upstream Node	Upstream Invert Elevation (ft)	Downstream Node	Downstream Invert Elevation (ft)	Length (ft)	Slope (%)	Diameter (in)	Material	Manning's n	Design Capacity (gpm)	Domestic Flow (gpm)	I/I Flow (gpm)	Total Flow (gpm)	Percent Full (%)	CIP No.	Notes
Kirkland_Main-1322	Kirkland_Manholes-2540	419.4	Kirkland_Manholes-2541	412.62	255.5	2.65	8	PVC	0.01	1,149	5	9	13	1.2	SM14-Ex-EX299	
Kirkland_Main-1324	Kirkland_Manholes-2542	402.84	Kirkland_Manholes-2547	388.67	366.3	3.87	8	PVC	0.01	1,387	29	34	64	4.6	SM14-Ex-EX299	
Kirkland_Main-1325	Kirkland_Manholes-2547	388.67	Kirkland_Manholes-2549	373.53	148.8	10.17	8	PVC	0.01	2,249	31	39	69	3.1	SM14-Ex-EX299	
Kirkland_Main-1327	Kirkland_Manholes-2543	398.38	Kirkland_Manholes-2545	394.25	263.6	1.57	8	PVC	0.01	883	4	9	12	1.4		
Kirkland_Main-1328	Kirkland_Manholes-2544	407.5	Kirkland_Manholes-2543	398.38	295.7	3.08	8	PVC	0.01	1,238	2	4	7	0.5	SM14-Ex-EX308	
Kirkland_Main-1329	Kirkland_Manholes-2546	394.6	Kirkland_Manholes-2545	394.25	207.1	0.17	8	PVC	0.01	290	1	4	5	1.7		
Kirkland_Main-1330	Kirkland_Manholes-2545	394.25	Kirkland_Manholes-2548	359.75	323.6	10.66	8	PVC	0.01	2,302	9	17	26	1.1		
Kirkland_Main-1331	Kirkland_Manholes-2549	373.53	Kirkland_Manholes-2550	363.01	106.8	9.85	8	PVC	0.01	2,213	31	43	74	3.4	SM14-Ex-EX299	
Kirkland_Main-1332	Kirkland_Manholes-2550	363.01	Kirkland_Manholes-2551	350.96	184.1	6.54	8	PVC	0.01	1,804	32	47	79	4.4	SM14-Ex-EX299	
Kirkland_Main-1333	Kirkland_Manholes-2551	350.96	Kirkland_Manholes-2552	332.83	142.8	12.69	8	PVC	0.01	2,512	49	90	139	5.5	SM14-Ex-EX299	
Kirkland_Main-1334	Kirkland_Manholes-2552	332.83	Kirkland_Manholes-2559	326.46	239.1	2.66	8	PVC	0.01	1,151	51	103	154	13.4	SM14-Ex-EX299	
Kirkland_Main-1335	Kirkland_Manholes-2555	336.08	Kirkland_Manholes-2552	332.83	311.9	1.04	8	PVC	0.01	720	2	9	10	1.5	SM14-Ex-EX322	
Kirkland_Main-1336	Kirkland_Manholes-2553	338.58	Kirkland_Manholes-2554	334.68	146	2.67	8	PVC	0.01	1,152	1	4	5	0.5	SM14-Ex-EX304	
Kirkland_Main-1337	Kirkland_Manholes-2892	130.3	Kirkland_Manholes-7	127.07	138.9	2.32	8	PVC	0.01	1,075	1	1	3	0.3		
Kirkland_Main-1338	Kirkland_Manholes-2554	334.68	Kirkland_Manholes-2558	329.23	295.9	1.84	8	PVC	0.01	957	7	9	16	1.7	SM14-Ex-EX304	
Kirkland_Main-1339	Kirkland_Manholes-2556	339.44	Kirkland_Manholes-2555	336.08	338.5	0.99	8	PVC	0.01	702	1	4	6	0.8	SM14-Ex-EX322	
Kirkland_Main-1340	Kirkland_Manholes-2557	338.97	Kirkland_Manholes-2564	326.24	273.9	4.65	8	PVC	0.01	1,520	1	4	5	0.3	SM14-Ex-EX303	
Kirkland_Main-1341	Kirkland_Manholes-2558	329.23	Kirkland_Manholes-2562	315.88	275	4.86	8	PVC	0.01	1,554	8	13	21	1.4	SM14-Ex-EX304	
Kirkland_Main-1342	Kirkland_Manholes-2559	326.46	Kirkland_Manholes-2614	304.78	296.2	7.32	8	PVC	0.01	1,907	51	107	158	8.3	SM14-Ex-EX299	
Kirkland_Main-1343	Kirkland_Manholes-2561	358.82	Kirkland_Manholes-2551	350.96	208.8	3.76	8	PVC	0.01	1,368	16	39	55	4		
Kirkland_Main-1344	Kirkland_Manholes-2560	366.92	Kirkland_Manholes-2561	358.82	174.3	4.65	8	PVC	0.01	1,520	2	4	6	0.4		
Kirkland_Main-1345	Kirkland_Manholes-2562	315.88	Kirkland_Manholes-2563	304.66	203.7	5.51	8	PVC	0.01	1,655	9	17	27	1.6	SM14-Ex-EX304	
Kirkland_Main-1346	Kirkland_Manholes-2563	304.66	Kirkland_Manholes-2603	296.02	227.1	3.81	8	PVC	0.01	1,375	11	21	33	2.4	SM14-Ex-EX304	
Kirkland_Main-1347	Kirkland_Manholes-2564	326.24	Kirkland_Manholes-2565	315.02	180.1	6.23	8	PVC	0.01	1,760	2	9	11	0.6	SM14-Ex-EX303	
Kirkland_Main-1349	Kirkland_Manholes-2565	315.02	Kirkland_Manholes-2590	303.32	215.8	5.42	8	PVC	0.01	1,642	12	43	55	3.3	SM14-Ex-EX303	
Kirkland_Main-1350	Kirkland_Manholes-2567	316.05	Kirkland_Manholes-2565	315.02	200.2	0.51	8	PVC	0.01	506	9	30	39	7.6	SM14-Ex-EX307	
Kirkland_Main-1353	Kirkland_Manholes-2456	21.67	Kirkland_Manholes-2458	21.12	286.3	0.19	12	PVC	0.01	911	66	111	177	19.4		
Kirkland_Main-1354	Kirkland_Manholes-2104	41.29	Kirkland_Manholes-2457	40.34	237.1	0.4	8	PVC	0.01	446	9	13	22	4.8	SM14-Ex-EX231	Drop Connection
Kirkland_Main-1355	Kirkland_Manholes-2459	25.23	Kirkland_Manholes-2458	21.12	57.9	7.1	8	PVC	0.01	1,879	1	13	14	0.7		
Kirkland_Main-1356	Kirkland_Manholes-2458	21.12	Kirkland_Manholes-2460	20.42	280.8	0.25	12	PVC	0.01	1,038	78	130	208	20.1		
Kirkland_Main-1357	Kirkland_Manholes-2105	41.32	Kirkland_Manholes-2459	40.36	240.6	0.4	8	PVC	0.01	446	1	7	7	1.6	SM14-Ex-EX230	Drop Connection
Kirkland_Main-1358	Kirkland_Manholes-2460	20.42	Kirkland_Manholes-2463	19.08	286.9	0.47	12	PVC	0.01	1,421	98	163	261	18.4		
Kirkland_Main-1359	Kirkland_Manholes-2461	23.27	Kirkland_Manholes-2460	20.42	36.9	7.72	8	PVC	0.01	1,959	10	20	30	1.5		
Kirkland_Main-1360	Kirkland_Manholes-2106	63.43	Kirkland_Manholes-2461	62.02	352	0.4	8	PVC	0.01	446	8	13	21	4.7	SM14-Ex-EX227	Drop Connection
Kirkland_Main-1361	Kirkland_Manholes-2462	20.98	Kirkland_Manholes-2460	20.42	12.7	4.42	8	PVC	0.01	1,483	10	7	16	1.1		
Kirkland_Main-1362	Kirkland_Manholes-2463	19.08	Kirkland_Manholes-2465	18.4	238.2	0.29	15	PVC	0.01	2,014	110	169	279	13.9		
Kirkland_Main-1363	Kirkland_Manholes-2464	24.34	Kirkland_Manholes-2465	24.15	46.3	0.4	8	PVC	0.01	446	15	33	47	10.6		Drop Connection
Kirkland_Main-1364	Kirkland_Manholes-2465	18.4	Kirkland_Manholes-2321	18.2	405.1	0.05	15	PVC	0.01	837	125	208	333	39.8		
Kirkland_Main-1365	Kirkland_Manholes-2466	40.06	Kirkland_Manholes-2464	24.34	133.9	11.74	8	PVC	0.01	2,416	14	26	40	1.7		
Kirkland_Main-1366	Kirkland_Manholes-754	246.56	Kirkland_Manholes-756	236.14	59.1	17.63	8	PVC	0.01	2,961	4	9	12	0.4		
Kirkland_Main-1367	Kirkland_Manholes-756	236.14	Kirkland_Manholes-759	235.08	17.7	6	8	PVC	0.01	1,727	4	13	17	1		
Kirkland_Main-1368	Kirkland_Manholes-759	235.08	Kirkland_Manholes-755	223.34	72.1	16.27	8	PVC	0.01	2,844	6	17	23	0.8		
Kirkland_Main-1369	Kirkland_Manholes-749	322.83	Kirkland_Manholes-748	311.92	207.7	5.25	8	PVC	0.01	1,616	21	39	59	3.7	SM14-Ex-EX71	
Kirkland_Main-1370	Kirkland_Manholes-743	333.02	Kirkland_Manholes-749	322.83	238.3	4.28	8	PVC	0.01	1,458	18	34	53	3.6	SM14-Ex-EX71	
Kirkland_Main-1371	Kirkland_Manholes-742	334.85	Kirkland_Manholes-743	333.02	278.1	0.66	8	PVC	0.01	572	12	21	33	5.8	SM14-Ex-EX71	
Kirkland_Main-1372	Kirkland_Manholes-744	343.43	Kirkland_Manholes-743	333.02	155.4	6.7	8	PVC	0.01	1,825	4	9	13	0.7	SM14-Ex-EX73	
Kirkland_Main-1373	Kirkland_Manholes-1551	340.04	Kirkland_Manholes-1548	334.13	358.9	1.65	8	PVC	0.01	905	1	4	6	0.6	SM14-Ex-EX122	
Kirkland_Main-1374	Kirkland_Manholes-1548	334.13	Kirkland_Manholes-1547	314.76	165.7	11.69	8	PVC	0.01	2,411	2	9	11	0.5	SM14-Ex-EX122	
Kirkland_Main-1375	Kirkland_Manholes-1554	318.87	Kirkland_Manholes-1547	314.76	166.1	2.48	8	PVC	0.01	1,109	4	13	17	1.6	SM14-Ex-EX122	
Kirkland_Main-1376	Kirkland_Manholes-1547	314.76	Kirkland_Manholes-1553	308.15	101.4	6.52	8	PVC	0.01	1,800	8	26	34	1.9	SM14-Ex-EX122	
Kirkland_Main-1377	Kirkland_Manholes-1549	335.84	Kirkland_Manholes-1550	330.23	147.4	3.81	8	PVC	0.01	1,375	1	4	5	0.4	SM14-Ex-EX122	
Kirkland_Main-1378	Kirkland_Manholes-1550	330.23	Kirkland_Manholes-1554	318.87	207.3	5.48	8	PVC	0.01	1,650	2	9	11	0.7	SM14-Ex-EX122	
Kirkland_Main-1379	Kirkland_Manholes-741	345.43	Kirkland_Manholes-696	340.09	318.5	1.68	8	PVC	0.01	913	2	4	6	0.7	SM14-Ex-EX74	
Kirkland_Main-1380	Kirkland_Manholes-696	340.09	Kirkland_Manholes-742	334.85	242.4	2.16	8	PVC	0.01	1,037	10	17	27	2.6	SM14-Ex-EX71	
Kirkland_Main-1381	Kirkland_Manholes-820	351.15	Kirkland_Manholes-821	328.81	334.9	6.67	8	PVC	0.01	1,821	2	4	6	0.3	SM14-Ex-EX72	
Kirkland_Main-1382	Kirkland_Manholes-745	351.42	Kirkland_Manholes-744	343.43	306.7	2.6	8	PVC	0.01	1,138	3	4	7	0.6	SM14-Ex-EX73	
Kirkland_Main-1383	Kirkland_Manholes-821	328.81	Kirkland_Manholes-746	326.06	200.6	1.37	8	PVC	0.01	825	3	9	11	1.4	SM14-Ex-EX72	
Kirkland_Main-1384	Kirkland_Manholes-746	326.06	Kirkland_Manholes-747	319.23	281	2.43	8	PVC	0.01	1,099	4	13	17	1.5	SM14-Ex-EX72	
Kirkland_Main-1385	Kirkland_Manholes-747	319.23	Kirkland_Manholes-748	311.92	331.6	2.2	8	PVC	0.01	1,047	5	17	22	2.1	SM14-Ex-EX72	
Kirkland_Main-1386	Kirkland_Manholes-1562	206.57	Kirkland_Manholes-1563	203.28	21.7	15.13	8	PVC	0.01	2,743	2	9	11	0.4		
Kirkland_Main-1387	Kirkland_Manholes-1560	251.28	Kirkland_Manholes-455	250.45	217.9	0.38	8	PVC	0.01	435	32	73	105	24	SM14-Ex-EX68	
Kirkland_Main-1388	Kirkland_Manholes-1559	253.89	Kirkland_Manholes-1560	251.28	258.2	1.01	8	PVC	0.01	709	30	69	99	14	SM14-Ex-EX68	

2035 (20-year) with Proposed Improvements - Peak Hour Flow - Pipe Capacity Table

Label	Upstream Node	Upstream Invert Elevation (ft)	Downstream Node	Downstream Invert Elevation (ft)	Length (ft)	Slope (%)	Diameter (in)	Material	Manning's n	Design Capacity (gpm)	Domestic Flow (gpm)	I/I Flow (gpm)	Total Flow (gpm)	Percent Full (%)	CIP No.	Notes
Kirkland_Main-1389	Kirkland_Manholes-317	146.79	Kirkland_Manholes-318	146.51	72.2	0.39	12	PVC	0.01	1,298	171	335	506	39	SM14-Ex-EX30	
Kirkland_Main-1390	Kirkland_Manholes-1052	151.4	Kirkland_Manholes-316	147.8	353.6	1.02	8	PVC	0.01	711	170	317	486	68.4		
Kirkland_Main-1392	Kirkland_Manholes-264	215.3	Kirkland_Manholes-1099	211.44	157	2.46	8	PVC	0.01	1,105	0	4	5	0.4		
Kirkland_Main-1398	Kirkland_Manholes-836	335.7	Kirkland_Manholes-835	335.4	62.1	0.48	8	PVC	0.01	490	16	30	46	9.3		
Kirkland_Main-1399	Kirkland_Manholes-835	335.4	Kirkland_Manholes-839	334.68	84.6	0.85	8	PVC	0.01	650	18	39	57	8.7		
Kirkland_Main-1400	Kirkland_Manholes-837	336.53	Kirkland_Manholes-836	335.7	248.7	0.33	8	PVC	0.01	407	14	26	40	9.8		
Kirkland_Main-1401	Kirkland_Manholes-838	337.31	Kirkland_Manholes-837	336.53	120.5	0.65	8	PVC	0.01	567	10	21	31	5.5		
Kirkland_Main-1402	Kirkland_Manholes-840	326.85	Kirkland_Manholes-841	325.94	71	1.28	8	PVC	0.01	798	27	60	87	10.9		
Kirkland_Main-1403	Kirkland_Manholes-841	325.94	Kirkland_Manholes-842	324.88	230.1	0.46	8	PVC	0.01	479	29	64	93	19.5		
Kirkland_Main-1404	Kirkland_Manholes-843	340.26	Kirkland_Manholes-842	324.88	172	8.94	8	PVC	0.01	2,108	3	4	7	0.3		
Kirkland_Main-1405	Kirkland_Manholes-844	342.5	Kirkland_Manholes-845	341.21	161.2	0.8	8	PVC	0.01	631	3	4	7	1.1		
Kirkland_Main-1406	Kirkland_Manholes-846	342.07	Kirkland_Manholes-845	341.21	84.3	1.02	8	PVC	0.01	712	6	17	24	3.3		
Kirkland_Main-1407	Kirkland_Manholes-845	341.21	Kirkland_Manholes-850	340.39	138.4	0.59	8	PVC	0.01	543	10	26	36	6.6		
Kirkland_Main-1408	Kirkland_Manholes-849	342.42	Kirkland_Manholes-846	342.07	117.3	0.3	8	PVC	0.01	385	5	13	18	4.8		
Kirkland_Main-1409	Kirkland_Manholes-847	343.01	Kirkland_Manholes-849	342.42	70.3	0.84	8	PVC	0.01	646	5	9	13	2.1		
Kirkland_Main-1410	Kirkland_Manholes-848	344.32	Kirkland_Manholes-847	343.01	145.5	0.9	8	PVC	0.01	669	4	4	9	1.3		
Kirkland_Main-1411	Kirkland_Manholes-850	340.39	Kirkland_Manholes-851	339.16	69.3	1.78	8	PVC	0.01	941	11	30	41	4.3		
Kirkland_Main-1412	Kirkland_Manholes-1538	302.73	Kirkland_Manholes-1537	302.03	362.6	0.19	8	PVC	0.01	310	9	17	26	8.4	SM14-Ex-EX124	
Kirkland_Main-1413	Kirkland_Manholes-1511	290.62	Kirkland_Manholes-1509	286.35	84.7	5.04	8	PVC	0.01	1,583	2	4	6	0.4		
Kirkland_Main-1414	Kirkland_Manholes-1510	287.19	Kirkland_Manholes-1509	286.35	79	1.06	8	PVC	0.01	727	1	4	6	0.8		
Kirkland_Main-1415	Kirkland_Manholes-1509	286.35	Kirkland_Manholes-1508	277.83	283.5	3.01	8	PVC	0.01	1,222	4	13	17	1.4		Drop Connection
Kirkland_Main-1416	Kirkland_Manholes-1537	302.03	Kirkland_Manholes-1536	298.86	351.3	0.9	8	PVC	0.01	670	13	21	34	5.1	SM14-Ex-EX124	
Kirkland_Main-1417	Kirkland_Manholes-762	287.2	Kirkland_Manholes-763	274.33	165.6	7.77	8	PVC	0.01	1,966	2	4	6	0.3	SM14-Ex-EX125	
Kirkland_Main-1418	Kirkland_Manholes-763	274.33	Kirkland_Manholes-1531	265.03	234.1	3.97	8	PVC	0.01	1,405	6	9	14	1	SM14-Ex-EX125	
Kirkland_Main-1419	Kirkland_Manholes-1541	294.69	Kirkland_Manholes-1543	289	216.2	2.63	8	PVC	0.01	1,144	8	17	25	2.2	SM14-Ex-EX123	
Kirkland_Main-1420	Kirkland_Manholes-1536	298.86	Kirkland_Manholes-1518	277.88	393.1	5.34	8	PVC	0.01	1,629	14	26	40	2.4	SM14-Ex-EX124	
Kirkland_Main-1421	Kirkland_Manholes-1544	284.46	Kirkland_Manholes-1545	272.4	63.3	19.06	8	PVC	0.01	3,078	12	26	37	1.2	SM14-Ex-EX123	
Kirkland_Main-1422	Kirkland_Manholes-1558	160.79	O-20	159.86	16.6	5.62	8	PVC	0.01	1,671	1	4	5	0.3		
Kirkland_Main-1424	Kirkland_Manholes-1557	161.32	O-21	159.86	64.6	2.26	8	PVC	0.01	1,060	2	9	11	1		
Kirkland_Main-1425	Kirkland_Manholes-1556	178.05	Kirkland_Manholes-1557	161.32	76.6	21.85	8	PVC	0.01	3,296	1	4	6	0.2		
Kirkland_Main-1427	Kirkland_Manholes-541	450.25	Kirkland_Manholes-542	440.69	230.2	4.15	8	PVC	0.01	1,437	19	73	91	6.4		
Kirkland_Main-1428	Kirkland_Manholes-542	440.69	Kirkland_Manholes-1978	440.32	89.3	0.41	8	PVC	0.01	454	19	77	96	21.3		
Kirkland_Main-1429	Kirkland_Manholes-544	449.4	Kirkland_Manholes-543	448.24	235	0.49	8	PVC	0.01	495	29	73	102	20.5		
Kirkland_Main-1430	Kirkland_Manholes-546	452.43	Kirkland_Manholes-545	450.22	300.2	0.74	8	PVC	0.01	605	24	64	88	14.6		
Kirkland_Main-1431	Kirkland_Manholes-545	450.22	Kirkland_Manholes-544	449.4	161.7	0.51	8	PVC	0.01	502	27	69	96	19		
Kirkland_Main-1432	Kirkland_Manholes-547	452.62	Kirkland_Manholes-546	452.43	162.6	0.12	8	PVC	0.01	243	21	60	81	33.5		
Kirkland_Main-1433	Kirkland_Manholes-548	453.36	Kirkland_Manholes-547	452.62	135.2	0.55	8	PVC	0.01	522	20	56	75	14.5		
Kirkland_Main-1434	Kirkland_Manholes-549	453.9	Kirkland_Manholes-548	453.36	128.1	0.42	8	PVC	0.01	456	16	43	59	12.9		
Kirkland_Main-1435	Kirkland_Manholes-552	455.6	Kirkland_Manholes-549	453.9	177.5	0.96	8	PVC	0.01	690	16	39	54	7.9		
Kirkland_Main-1436	Kirkland_Manholes-550	455.89	Kirkland_Manholes-552	455.6	183.6	0.16	8	PVC	0.01	280	1	4	5	1.9		
Kirkland_Main-1437	Kirkland_Manholes-551	462.06	Kirkland_Manholes-563	461.52	194.4	0.28	8	PVC	0.01	372	5	4	10	2.6		
Kirkland_Main-1438	Kirkland_Manholes-553	455.61	Kirkland_Manholes-552	455.6	92.3	0.01	8	PVC	0.01	73	14	30	44	59.7		
Kirkland_Main-1439	Kirkland_Manholes-554	456.45	Kirkland_Manholes-553	455.61	88.9	0.94	8	PVC	0.01	685	13	26	38	5.6		
Kirkland_Main-1440	Kirkland_Manholes-558	457.55	Kirkland_Manholes-554	456.45	287.7	0.38	8	PVC	0.01	436	9	17	27	6.1		
Kirkland_Main-1441	Kirkland_Manholes-557	460.23	Kirkland_Manholes-554	456.45	194.6	1.94	8	PVC	0.01	983	2	4	6	0.6		
Kirkland_Main-1442	Kirkland_Manholes-559	467.58	Kirkland_Manholes-558	457.55	209.6	4.79	8	PVC	0.01	1,542	2	4	7	0.4		
Kirkland_Main-1443	Kirkland_Manholes-563	461.52	Kirkland_Manholes-558	457.55	324.2	1.22	8	PVC	0.01	780	6	9	15	1.9		
Kirkland_Main-1444	Kirkland_Manholes-562	483.8	Kirkland_Manholes-560	483.4	99.9	0.4	8	PVC	0.01	446	2	4	6	1.4		
Kirkland_Main-1445	Kirkland_Manholes-565	468.54	Kirkland_Manholes-2020	468.34	312.4	0.06	12	PVC	0.01	530	118	155	272	51.4	SM14-2035-DF12	
Kirkland_Main-1446	Kirkland_Manholes-564	469.28	Kirkland_Manholes-565	468.54	228	0.32	10	PVC	0.01	728	117	150	267	36.7		
Kirkland_Main-1447	Kirkland_Manholes-567	470.28	Kirkland_Manholes-564	469.28	324.2	0.31	10	PVC	0.01	710	98	103	201	28.3		
Kirkland_Main-1448	Kirkland_Manholes-3045	483.35	Kirkland_Manholes-2029	479.06	297.6	1.44	8	PVC	0.01	846	4	9	12	1.5		
Kirkland_Main-1449	Kirkland_Manholes-568	471.29	Kirkland_Manholes-567	470.28	325	0.31	10	PVC	0.01	713	97	94	191	26.8		
Kirkland_Main-1450	Kirkland_Manholes-569	473.29	Kirkland_Manholes-568	471.29	178.4	1.12	10	PVC	0.01	1,354	96	90	186	13.7		
Kirkland_Main-1451	Kirkland_Manholes-570	473.5	Kirkland_Manholes-569	473.29	54.9	0.38	8	PVC	0.01	433	96	86	181	41.9		
Kirkland_Main-1452	Kirkland_Manholes-1406	473.57	Kirkland_Manholes-570	473.5	288.8	0.03	12	PVC	0.01	330	89	82	171	51.7	SM14-Ex-EX275	
Kirkland_Main-1453	Kirkland_Manholes-571	472.91	Kirkland_Manholes-567	470.28	172.6	1.52	8	PVC	0.01	870	0	4	5	0.5		
Kirkland_Main-1454	Kirkland_Manholes-575	113.73	Kirkland_Manholes-574	110.98	152.2	1.81	8	PVC	0.01	948	2	8	11	1.1	SM14-Ex-EX116	
Kirkland_Main-1455	Kirkland_Manholes-1665	94.21	Kirkland_Manholes-1666	89.71	26.9	16.73	8	PVC	0.01	2,883	39	91	130	4.5		
Kirkland_Main-1456	Kirkland_Manholes-957	315.92	Kirkland_Manholes-958	300.6	184.6	8.3	8	PVC	0.01	2,031	5	21	27	1.3		
Kirkland_Main-1457	Kirkland_Manholes-958	300.6	Kirkland_Manholes-942	300.01	173	0.34	8	PVC	0.01	412	7	26	32	7.9		
Kirkland_Main-1458	Kirkland_Manholes-960	258.67	Kirkland_Manholes-959	252.05	190.9	3.47	8	PVC	0.01	1,313	3	4	7	0.6		

2035 (20-year) with Proposed Improvements - Peak Hour Flow - Pipe Capacity Table

Label	Upstream Node	Upstream Invert Elevation (ft)	Downstream Node	Downstream Invert Elevation (ft)	Length (ft)	Slope (%)	Diameter (in)	Material	Manning's n	Design Capacity (gpm)	Domestic Flow (gpm)	I/I Flow (gpm)	Total Flow (gpm)	Percent Full (%)	CIP No.	Notes
Kirkland_Main-1459	Kirkland_Manholes-2752	253.8	Kirkland_Manholes-959	252.05	339.9	0.51	8	PVC	0.01	506	17	36	53	10.5		
Kirkland_Main-1460	Kirkland_Manholes-959	252.05	Kirkland_Manholes-963	250.7	229	0.59	8	PVC	0.01	541	23	45	67	12.4		
Kirkland_Main-1461	Kirkland_Manholes-961	263.75	Kirkland_Manholes-962	249.53	185.7	7.66	8	PVC	0.01	1,951	2	4	6	0.3		
Kirkland_Main-1462	Kirkland_Manholes-964	266.7	Kirkland_Manholes-963	250.7	315.2	5.08	8	PVC	0.01	1,589	1	4	6	0.4		
Kirkland_Main-1463	Kirkland_Manholes-963	250.7	Kirkland_Manholes-962	249.53	229.2	0.51	8	PVC	0.01	504	27	54	81	16		
Kirkland_Main-1464	Kirkland_Manholes-962	249.53	Kirkland_Manholes-966	247.26	381	0.59	8	PVC	0.01	544	31	62	93	17.1		
Kirkland_Main-1465	Kirkland_Manholes-965	252.45	Kirkland_Manholes-966	247.26	188.4	2.75	8	PVC	0.01	1,170	3	4	8	0.7		
Kirkland_Main-1466	Kirkland_Manholes-966	247.26	Kirkland_Manholes-967	246.35	132.7	0.69	8	PVC	0.01	584	36	71	108	18.4		
Kirkland_Main-1467	Kirkland_Manholes-968	245.61	Kirkland_Manholes-969	239.3	150	4.21	8	PVC	0.01	1,446	1	4	6	0.4		
Kirkland_Main-1468	Kirkland_Manholes-969	239.3	Kirkland_Manholes-970	236.6	291.2	0.93	8	PVC	0.01	679	2	9	11	1.7		
Kirkland_Main-1469	Kirkland_Manholes-970	236.6	Kirkland_Manholes-971	236.2	92.8	0.43	8	PVC	0.01	463	4	13	18	3.8		
Kirkland_Main-1470	Kirkland_Manholes-967	246.35	Kirkland_Manholes-972	246.27	41.8	0.2	8	PVC	0.01	314	37	76	113	35.8		
Kirkland_Main-1471	Kirkland_Manholes-971	236.2	Kirkland_Manholes-973	233.19	134.5	2.24	8	PVC	0.01	1,055	5	18	23	2.2	SM14-Ex-EX2	
Kirkland_Main-1472	Kirkland_Manholes-974	234.1	Kirkland_Manholes-973	233.19	211	0.43	8	PVC	0.01	463	3	9	12	2.6		
Kirkland_Main-1473	Kirkland_Manholes-987	239.5	Kirkland_Manholes-976	229.3	219.2	4.65	8	PVC	0.01	1,521	2	4	6	0.4		
Kirkland_Main-1474	Kirkland_Manholes-975	230.2	Kirkland_Manholes-976	229.3	22.7	3.96	8	PVC	0.01	1,404	10	36	45	3.2		
Kirkland_Main-1475	Kirkland_Manholes-973	233.19	Kirkland_Manholes-975	230.2	123.5	2.42	8	PVC	0.01	1,097	9	31	40	3.7		
Kirkland_Main-1476	Kirkland_Manholes-976	229.3	Kirkland_Manholes-977	225.95	181.2	1.85	8	PVC	0.01	959	12	45	57	5.9		
Kirkland_Main-1478	Kirkland_Manholes-1564	164.37	O-15	160	18.2	24.07	8	PVC	0.01	3,459	3	17	20	0.6		
Kirkland_Main-1479	Kirkland_Manholes-755	223.34	Kirkland_Manholes-1565	218.86	20.1	22.24	8	PVC	0.01	3,325	6	21	27	0.8		
Kirkland_Main-1480	Kirkland_Manholes-1567	133.87	Kirkland_Manholes-1566	130.52	314.6	1.06	8	PVC	0.01	728	4	8	13	1.7	SM14-Ex-EX119	
Kirkland_Main-1481	Kirkland_Manholes-1566	130.52	Kirkland_Manholes-1604	117.22	313.5	4.24	8	PVC	0.01	1,452	5	17	22	1.5	SM14-Ex-EX119	
Kirkland_Main-1482	Kirkland_Manholes-776	207.48	Kirkland_Manholes-775	172.73	191.1	18.19	8	PVC	0.01	3,007	8	30	38	1.3		
Kirkland_Main-1483	Kirkland_Manholes-1565	218.86	Kirkland_Manholes-776	207.48	52.1	21.84	8	PVC	0.01	3,295	6	26	32	1		
Kirkland_Main-1484	Kirkland_Manholes-1263	156.98	Kirkland_Manholes-1262	156.59	13.2	2.96	8	PVC	0.01	1,213	1	8	9	0.7	SM14-Ex-EX111	
Kirkland_Main-1485	Kirkland_Manholes-1262	156.59	Kirkland_Manholes-1261	144.57	314.4	3.82	8	PVC	0.01	1,379	8	41	50	3.6	SM14-Ex-EX111	
Kirkland_Main-1486	Kirkland_Manholes-1260	164.33	Kirkland_Manholes-1261	144.57	293.7	6.73	8	PVC	0.01	1,829	3	8	11	0.6	SM14-Ex-EX110	
Kirkland_Main-1488	Kirkland_Manholes-1259	154.8	Kirkland_Manholes-1258	154.28	130.3	0.4	8	PVC	0.01	445	10	33	43	9.6	SM14-Ex-EX108	
Kirkland_Main-1489	Kirkland_Manholes-1258	154.28	Kirkland_Manholes-1257	152.6	347	0.48	8	PVC	0.01	491	20	66	86	17.5	SM14-Ex-EX108	
Kirkland_Main-1490	Kirkland_Manholes-1257	152.6	Kirkland_Manholes-1256	151.53	24	4.46	8	PVC	0.01	1,489	22	74	96	6.4	SM14-Ex-EX108	
Kirkland_Main-1494	Kirkland_Manholes-2467	42.59	Kirkland_Manholes-2466	40.06	76.4	3.31	8	PVC	0.01	1,283	11	20	30	2.4		
Kirkland_Main-1495	Kirkland_Manholes-2469	49.1	Kirkland_Manholes-2467	42.59	138.2	4.71	8	PVC	0.01	1,530	9	13	22	1.4		
Kirkland_Main-1496	Kirkland_Manholes-2468	49.98	Kirkland_Manholes-2469	49.48	124.2	0.4	8	PVC	0.01	446	8	7	15	3.3		Drop Connection
Kirkland_Main-1498	Kirkland_Manholes-2470	236.6	Kirkland_Manholes-2472	223.64	225	5.76	8	PVC	0.01	1,692	2	4	6	0.4	SM14-Ex-EX282	
Kirkland_Main-1499	Kirkland_Manholes-2472	223.64	Kirkland_Manholes-2473	222.78	215.8	0.4	8	PVC	0.01	446	5	13	18	4	SM14-Ex-EX282	Drop Connection
Kirkland_Main-1500	Kirkland_Manholes-2473	207.49	Kirkland_Manholes-2474	188.45	212.3	8.97	8	PVC	0.01	2,111	8	17	25	1.2	SM14-Ex-EX282	
Kirkland_Main-1501	Kirkland_Manholes-2471	234.47	Kirkland_Manholes-2472	223.64	364.1	2.97	8	PVC	0.01	1,216	2	4	6	0.5	SM14-Ex-EX283	
Kirkland_Main-1502	Kirkland_Manholes-2474	188.45	Kirkland_Manholes-2476	187.5	225.3	0.42	8	PVC	0.01	458	10	26	36	7.8	SM14-Ex-EX282	
Kirkland_Main-1505	Kirkland_Manholes-2492	55.46	Kirkland_Manholes-2666	55.28	147.8	0.12	18	PVC	0.01	2,139	182	322	504	23.6	SM14-Ex-EX222	
Kirkland_Main-1506	Kirkland_Manholes-2088	57.39	Kirkland_Manholes-2492	55.46	144	1.34	18	PVC	0.01	7,094	144	272	417	5.9	SM14-Ex-EX222	
Kirkland_Main-1507	Kirkland_Manholes-2090	57.44	Kirkland_Manholes-2088	57.39	370.9	0.01	18	PVC	0.01	712	142	260	402	56.5	SM14-Ex-EX222	
Kirkland_Main-1508	Kirkland_Manholes-2089	58.23	Kirkland_Manholes-2088	57.39	14.1	5.97	8	PVC	0.01	1,723	1	6	7	0.4		
Kirkland_Main-1509	Kirkland_Manholes-2620	281.06	Kirkland_Manholes-2618	278.4	382.5	0.7	8	PVC	0.01	588	3	9	11	1.9	SM14-Ex-EX299	
Kirkland_Main-1510	Kirkland_Manholes-2604	283.17	Kirkland_Manholes-2620	281.06	375.6	0.56	8	PVC	0.01	528	1	4	5	1	SM14-Ex-EX299	
Kirkland_Main-1512	Kirkland_Manholes-2621	277.53	Kirkland_Manholes-2433	276.88	161.5	0.4	8	PVC	0.01	446	2	4	6	1.4	SM14-Ex-EX244	Drop Connection
Kirkland_Main-1513	Kirkland_Manholes-2623	277.98	Kirkland_Manholes-2622	271.8	433.3	1.43	8	PVC	0.01	842	2	4	6	0.7	SM14-Ex-EX281	
Kirkland_Main-1514	Kirkland_Manholes-2622	271.8	Kirkland_Manholes-2625	260.54	221.9	5.07	8	PVC	0.01	1,588	2	9	11	0.7	SM14-Ex-EX281	
Kirkland_Main-1515	Kirkland_Manholes-2624	276.22	Kirkland_Manholes-2635	275.48	185.1	0.4	8	PVC	0.01	446	1	4	5	1.2	SM14-Ex-EX294	
Kirkland_Main-1516	Kirkland_Manholes-2625	260.54	Kirkland_Manholes-2626	246.92	188.3	7.23	8	PVC	0.01	1,896	3	13	16	0.8	SM14-Ex-EX281	
Kirkland_Main-1517	Kirkland_Manholes-2626	246.92	Kirkland_Manholes-2627	215.5	237.8	13.21	8	PVC	0.01	2,563	4	17	21	0.8	SM14-Ex-EX281	
Kirkland_Main-1518	Kirkland_Manholes-2627	215.5	Kirkland_Manholes-2628	186	220.8	13.36	8	PVC	0.01	2,577	6	21	28	1.1	SM14-Ex-EX281	
Kirkland_Main-1519	Kirkland_Manholes-2476	187.5	Kirkland_Manholes-2628	186	397.3	0.38	8	PVC	0.01	433	13	30	43	9.9	SM14-Ex-EX282	
Kirkland_Main-1520	Kirkland_Manholes-2606	272.98	Kirkland_Manholes-2607	264.34	256.6	3.37	8	PVC	0.01	1,294	2	4	6	0.5	SM14-Ex-EX298	
Kirkland_Main-1521	Kirkland_Manholes-2607	264.34	Kirkland_Manholes-2608	229.39	401.2	8.71	8	PVC	0.01	2,081	6	9	15	0.7	SM14-Ex-EX298	Drop Connection
Kirkland_Main-1522	Kirkland_Manholes-2608	227.04	Kirkland_Manholes-2600	217.97	170.3	5.33	8	PVC	0.01	1,627	8	13	20	1.3	SM14-Ex-EX298	
Kirkland_Main-1523	Kirkland_Manholes-2630	232.51	Kirkland_Manholes-2629	172.55	421	14.24	8	PVC	0.01	2,661	12	21	34	1.3	SM14-Ex-EX295	
Kirkland_Main-1524	Kirkland_Manholes-1219	264.33	Kirkland_Manholes-1139	247.37	248	6.84	8	PVC	0.01	1,844	2	8	10	0.5	SM14-Ex-EX80	
Kirkland_Main-1525	Kirkland_Manholes-1139	247.37	Kirkland_Manholes-1138	221.13	248.6	10.56	8	PVC	0.01	2,291	4	17	20	0.9	SM14-Ex-EX80	
Kirkland_Main-1526	Kirkland_Manholes-1138	221.13	Kirkland_Manholes-1141	204.1	177.9	9.57	8	PVC	0.01	2,181	5	25	30	1.4	SM14-Ex-EX80	
Kirkland_Main-1527	Kirkland_Manholes-1152	135.47	Kirkland_Manholes-1811	129.72	351.2	1.64	8	PVC	0.01	902	21	74	95	10.5	SM10	
Kirkland_Main-1528	Kirkland_Manholes-1153	137.55	Kirkland_Manholes-1154	131.73	270.2	2.15	8	PVC	0.01	1,035	3	8	11	1	SM10	
Kirkland_Main-1529	Kirkland_Manholes-1154	131.73	Kirkland_Manholes-1155	122.09	288.9	3.34	8	PVC	0.01	1,288	4	17	20	1.6	SM10	

2035 (20-year) with Proposed Improvements - Peak Hour Flow - Pipe Capacity Table

Label	Upstream Node	Upstream Invert Elevation (ft)	Downstream Node	Downstream Invert Elevation (ft)	Length (ft)	Slope (%)	Diameter (in)	Material	Manning's n	Design Capacity (gpm)	Domestic Flow (gpm)	I/I Flow (gpm)	Total Flow (gpm)	Percent Full (%)	CIP No.	Notes
Kirkland_Main-1530	Kirkland_Manholes-1155	122.09	Kirkland_Manholes-1156	108.19	328.7	4.23	8	PVC	0.01	1,450	6	25	30	2.1	SM10	
Kirkland_Main-1531	Kirkland_Manholes-1156	108.19	Kirkland_Manholes-1157	99.29	118.4	7.51	8	PVC	0.01	1,933	8	33	41	2.1	SM10	
Kirkland_Main-1532	Kirkland_Manholes-1157	99.29	Kirkland_Manholes-1159	82.66	203.9	8.16	8	PVC	0.01	2,014	15	66	81	4	SM10	
Kirkland_Main-1533	Kirkland_Manholes-1159	82.66	Kirkland_Manholes-1160	77.11	29.4	18.89	8	PVC	0.01	3,064	17	74	91	3		
Kirkland_Main-1534	Kirkland_Manholes-1158	124.93	Kirkland_Manholes-1157	99.29	160.8	15.95	8	PVC	0.01	2,816	6	25	31	1.1	SM10	
Kirkland_Main-1535	Kirkland_Manholes-1162	78.51	Kirkland_Manholes-1160	77.11	390.4	0.36	15	PVC	0.01	2,257	112	421	883	39.1		
Kirkland_Main-1536	Kirkland_Manholes-1179	123.76	Kirkland_Manholes-1163	96.51	315	8.65	8	PVC	0.01	2,074	59	165	224	10.8	SM10	
Kirkland_Main-1537	Kirkland_Manholes-1163	96.51	Kirkland_Manholes-1161	78.67	122.8	14.53	8	PVC	0.01	2,687	71	223	294	10.9	SM14-Ex-EX77	
Kirkland_Main-1538	Kirkland_Manholes-1164	119.66	Kirkland_Manholes-1163	96.51	338.6	6.84	8	PVC	0.01	1,844	11	50	60	3.3	SM10	
Kirkland_Main-1539	Kirkland_Manholes-1165	133.24	Kirkland_Manholes-1164	119.66	224	6.06	8	PVC	0.01	1,736	9	41	51	2.9	SM10	
Kirkland_Main-1540	Kirkland_Manholes-1166	151.97	Kirkland_Manholes-1165	133.24	158.7	11.8	8	PVC	0.01	2,422	2	8	10	0.4	SM10	
Kirkland_Main-1541	Kirkland_Manholes-1167	140.51	Kirkland_Manholes-1165	133.24	127.8	5.69	8	PVC	0.01	1,681	7	25	32	1.9	SM10	
Kirkland_Main-1542	Kirkland_Manholes-1168	149.52	Kirkland_Manholes-1167	140.51	328.4	2.74	8	PVC	0.01	1,168	5	17	21	1.8	SM10	
Kirkland_Main-1543	Kirkland_Manholes-1169	156.83	Kirkland_Manholes-1168	149.52	316.3	2.31	8	PVC	0.01	1,072	2	8	10	1	SM10	
Kirkland_Main-1544	Kirkland_Manholes-662	248.07	Kirkland_Manholes-651	247.63	225.4	0.2	18	PVC	0.01	2,708	392	1,095	1,486	54.9	SM14-2035-DF9	
Kirkland_Main-1545	Kirkland_Manholes-653	238.2	Kirkland_Manholes-639	237.89	305.4	0.1	21	PVC	0.01	2,946	282	515	797	27.1		
Kirkland_Main-1546	Kirkland_Manholes-654	239.59	Kirkland_Manholes-653	238.2	298.1	0.47	21	PVC	0.01	6,313	281	511	792	12.5		
Kirkland_Main-1547	Kirkland_Manholes-655	240	Kirkland_Manholes-654	239.59	255.9	0.16	21	PVC	0.01	3,700	279	507	786	21.2		Drop Connection
Kirkland_Main-1548	Kirkland_Manholes-1574	241.8	Kirkland_Manholes-657	241.69	265.5	0.04	21	PVC	0.01	1,882	277	494	770	40.9		
Kirkland_Main-1549	Kirkland_Manholes-657	241.69	Kirkland_Manholes-656	240.1	132.5	1.2	21	PVC	0.01	10,129	277	498	775	7.7		
Kirkland_Main-1550	Kirkland_Manholes-656	240.1	Kirkland_Manholes-655	240	131.8	0.08	21	PVC	0.01	2,546	278	502	780	30.6		Drop Connection
Kirkland_Main-1551	Kirkland_Manholes-658	246.8	Kirkland_Manholes-659	246.11	66.6	1.04	8	PVC	0.01	718	2	13	15	2.1		
Kirkland_Main-1552	Kirkland_Manholes-660	246.84	Kirkland_Manholes-659	246.11	57.6	1.27	8	PVC	0.01	793	3	4	7	0.9		
Kirkland_Main-1553	Kirkland_Manholes-659	246.11	Kirkland_Manholes-661	245.17	89.4	1.05	8	PVC	0.01	723	5	21	27	3.7		
Kirkland_Main-1554	Kirkland_Manholes-651	247.63	Kirkland_Manholes-645	243.42	262.6	1.6	18	PVC	0.01	7,761	393	1,099	1,492	19.2	SM14-2035-DF9	
Kirkland_Main-1555	Kirkland_Manholes-652	251.94	Kirkland_Manholes-662	248.07	324.4	1.19	18	PVC	0.01	6,694	391	1,090	1,482	22.1	SM14-2035-DF9	
Kirkland_Main-1556	Kirkland_Manholes-664	268.55	Kirkland_Manholes-663	252.67	383.8	4.14	8	PVC	0.01	1,434	2	4	7	0.5		
Kirkland_Main-1557	Kirkland_Manholes-663	252.67	Kirkland_Manholes-652	251.94	362.7	0.2	18	PVC	0.01	2,750	390	1,086	1,476	53.7	SM14-2035-DF9	
Kirkland_Main-1558	Kirkland_Manholes-666	254.95	Kirkland_Manholes-665	253.2	321.8	0.54	15	PVC	0.01	2,780	344	970	1,314	47.3		
Kirkland_Main-1559	Kirkland_Manholes-665	253.2	Kirkland_Manholes-663	252.67	360.1	0.15	18	PVC	0.01	2,351	384	1,077	1,462	62.2	SM14-Ex-EX135	
Kirkland_Main-1560	Kirkland_Manholes-668	260.28	Kirkland_Manholes-667	256.8	251.1	1.39	8	PVC	0.01	830	4	4	9	1		
Kirkland_Main-1561	Kirkland_Manholes-667	256.8	Kirkland_Manholes-665	253.2	386.9	0.93	8	PVC	0.01	680	38	103	141	20.7		
Kirkland_Main-1562	Kirkland_Manholes-669	262.97	Kirkland_Manholes-667	256.8	300.6	2.05	8	PVC	0.01	1,010	31	94	126	12.4		
Kirkland_Main-1563	Kirkland_Manholes-671	267.47	Kirkland_Manholes-670	264.24	114.1	2.83	8	PVC	0.01	1,186	10	26	36	3		
Kirkland_Main-1564	Kirkland_Manholes-672	266.2	Kirkland_Manholes-670	264.24	209.3	0.94	8	PVC	0.01	682	20	60	80	11.7		
Kirkland_Main-1565	Kirkland_Manholes-670	264.24	Kirkland_Manholes-669	262.97	88.5	1.43	8	PVC	0.01	844	30	90	120	14.2		
Kirkland_Main-1567	Kirkland_Manholes-676	280.09	Kirkland_Manholes-674	276.15	217.6	1.81	8	PVC	0.01	949	3	4	8	0.8		
Kirkland_Main-1568	Kirkland_Manholes-674	276.15	Kirkland_Manholes-675	275.52	20.5	3.07	8	PVC	0.01	1,235	8	17	25	2		
Kirkland_Main-1569	Kirkland_Manholes-673	281.46	Kirkland_Manholes-674	276.15	196.8	2.7	8	PVC	0.01	1,158	3	9	11	1		
Kirkland_Main-1570	Kirkland_Manholes-675	275.52	Kirkland_Manholes-671	267.47	256.7	3.14	8	PVC	0.01	1,249	8	21	30	2.4		
Kirkland_Main-1571	Kirkland_Manholes-677	287.02	Kirkland_Manholes-673	281.46	185.8	2.99	8	PVC	0.01	1,220	2	4	6	0.5		
Kirkland_Main-1572	Kirkland_Manholes-1728	26.2	Kirkland_Manholes-1729	25.06	120.1	0.95	12	PVC	0.01	2,026	98	58	156	7.7		
Kirkland_Main-1573	Kirkland_Manholes-1727	26.48	Kirkland_Manholes-1728	26.2	59.2	0.47	8	PVC	0.01	485	61	33	94	19.5		
Kirkland_Main-1574	Kirkland_Manholes-1724	26.68	Kirkland_Manholes-1727	26.48	122.2	0.16	8	PVC	0.01	285	61	25	85	30		
Kirkland_Main-1575	Kirkland_Manholes-1725	28.56	Kirkland_Manholes-1724	26.68	150.5	1.25	8	PVC	0.01	788	40	17	57	7.2		
Kirkland_Main-1576	Kirkland_Manholes-1726	29.93	Kirkland_Manholes-1725	28.56	57.1	2.4	8	PVC	0.01	1,092	24	8	32	2.9		
Kirkland_Main-1577	Kirkland_Manholes-1650	145.43	Kirkland_Manholes-1711	136.47	206.1	4.35	12	PVC	0.01	4,335	15	66	81	1.9	SM14-Ex-EX196	
Kirkland_Main-1578	Kirkland_Manholes-1751	37.07	Kirkland_Manholes-1750	33.34	26	14.35	8	PVC	0.01	2,670	1	8	9	0.3	SM14-Ex-EX164	
Kirkland_Main-1580	Kirkland_Manholes-2722	21	Kirkland_Manholes-3100	18.3	194.6	1.39	12	PVC	0.01	2,449	111	62	173	7.1	SM14-Ex-EX289	
Kirkland_Main-1585	Kirkland_Manholes-1750	33.34	Kirkland_Manholes-1749	32.74	150.9	0.4	8	PVC	0.01	446	3	17	19	4.3		Drop Connection
Kirkland_Main-1586	Kirkland_Manholes-1749	30.51	Kirkland_Manholes-1745	27.57	191.8	1.53	8	PVC	0.01	873	4	25	28	3.2		
Kirkland_Main-1587	Kirkland_Manholes-1744	27.68	Kirkland_Manholes-1745	27.57	23.9	0.46	8	PVC	0.01	479	1	8	9	1.9		
Kirkland_Main-1588	Kirkland_Manholes-1955	335.45	Kirkland_Manholes-1958	324.88	118.1	8.95	8	PVC	0.01	2,109	11	13	23	1.1		
Kirkland_Main-1589	Kirkland_Manholes-1958	324.88	Kirkland_Manholes-1939	324.34	135.7	0.4	8	PVC	0.01	446	11	21	33	7.3		
Kirkland_Main-1590	Kirkland_Manholes-1959	325.55	Kirkland_Manholes-1958	324.88	167.8	0.4	8	PVC	0.01	446	0	4	5	1		
Kirkland_Main-1591	Kirkland_Manholes-1960	312.18	Kirkland_Manholes-1892	301.26	279	3.91	8	PVC	0.01	1,395	1	4	5	0.3		
Kirkland_Main-1592	Kirkland_Manholes-1962	345.61	Kirkland_Manholes-1961	341.24	157.8	2.77	8	PVC	0.01	1,173	15	4	19	1.7		
Kirkland_Main-1593	Kirkland_Manholes-1961	341.24	Kirkland_Manholes-1964	341.08	188.7	0.08	8	PVC	0.01	205	34	69	102	49.9		
Kirkland_Main-1594	Kirkland_Manholes-1964	341.08	Kirkland_Manholes-1963	340.77	13.1	2.37	8	PVC	0.01	1,085	69	99	168	15.5		
Kirkland_Main-1595	Kirkland_Manholes-1965	345.05	Kirkland_Manholes-1964	341.08	103.3	3.84	8	PVC	0.01	1,382	35	26	61	4.4		
Kirkland_Main-1596	Kirkland_Manholes-1967	421.47	Kirkland_Manholes-1966	418.21	134.2	2.43	8	PVC	0.01	1,099	54	167	221	20.1	SM14-Ex-EX216	
Kirkland_Main-1597	Kirkland_Manholes-1968	421.67	Kirkland_Manholes-1967	421.47	23.9	0.84	8	PVC	0.01	646	53	163	216	33.4		

2035 (20-year) with Proposed Improvements - Peak Hour Flow - Pipe Capacity Table

Label	Upstream Node	Upstream Invert Elevation (ft)	Downstream Node	Downstream Invert Elevation (ft)	Length (ft)	Slope (%)	Diameter (in)	Material	Manning's n	Design Capacity (gpm)	Domestic Flow (gpm)	I/I Flow (gpm)	Total Flow (gpm)	Percent Full (%)	CIP No.	Notes
Kirkland_Main-1598	Kirkland_Manholes-1969	423.5	Kirkland_Manholes-1968	421.67	353.5	0.52	8	PVC	0.01	507	50	159	209	41.2		
Kirkland_Main-1599	Kirkland_Manholes-1970	425.5	Kirkland_Manholes-1969	423.5	200.6	1	8	PVC	0.01	704	6	17	23	3.3		
Kirkland_Main-1600	Kirkland_Manholes-1974	432	Kirkland_Manholes-1969	423.5	272.7	3.12	8	PVC	0.01	1,245	42	137	180	14.4		
Kirkland_Main-1601	Kirkland_Manholes-1971	425.8	Kirkland_Manholes-1970	425.5	74.8	0.4	8	PVC	0.01	446	4	13	17	3.9		
Kirkland_Main-1602	Kirkland_Manholes-1972	426.31	Kirkland_Manholes-1971	425.8	127.8	0.4	8	PVC	0.01	446	3	9	12	2.6		
Kirkland_Main-1603	Kirkland_Manholes-1973	430.86	Kirkland_Manholes-1972	426.31	87.6	5.19	8	PVC	0.01	1,607	1	4	5	0.3		
Kirkland_Main-1604	Kirkland_Manholes-2631	265.77	Kirkland_Manholes-2630	232.51	349	9.53	8	PVC	0.01	2,176	8	17	25	1.1	SM14-Ex-EX295	
Kirkland_Main-1605	Kirkland_Manholes-2632	276.84	Kirkland_Manholes-2631	265.77	241.2	4.59	8	PVC	0.01	1,510	5	13	18	1.2	SM14-Ex-EX295	
Kirkland_Main-1606	Kirkland_Manholes-2649	147.51	Kirkland_Manholes-2648	144.73	165.5	1.68	8	PVC	0.01	914	5	12	17	1.9		
Kirkland_Main-1607	Kirkland_Manholes-2648	144.73	Kirkland_Manholes-2647	132.46	109.5	11.21	8	PVC	0.01	2,360	7	19	25	1.1		
Kirkland_Main-1608	Kirkland_Manholes-2647	132.46	Kirkland_Manholes-2646	96.97	134.3	26.42	8	PVC	0.01	3,624	9	25	34	0.9		
Kirkland_Main-1609	Kirkland_Manholes-2646	96.97	Kirkland_Manholes-2645	79.04	111.3	16.11	8	PVC	0.01	2,830	12	31	43	1.5		
Kirkland_Main-1610	Kirkland_Manholes-2650	148.19	Kirkland_Manholes-2649	147.51	170.3	0.4	8	PVC	0.01	446	2	6	9	1.9		
Kirkland_Main-1611	Kirkland_Manholes-2651	121.43	Kirkland_Manholes-2652	57.18	251.5	25.55	8	PVC	0.01	3,564	3	6	10	0.3	SM14-Ex-EX292	
Kirkland_Main-1612	Kirkland_Manholes-2654	54.76	Kirkland_Manholes-2657	43.64	394.5	2.82	8	PVC	0.01	1,184	8	25	33	2.8	SM14-Ex-EX291	
Kirkland_Main-1613	Kirkland_Manholes-2653	56.99	Kirkland_Manholes-2654	54.76	13.8	16.21	8	PVC	0.01	2,839	7	19	26	0.9	SM14-Ex-EX292	
Kirkland_Main-1614	Kirkland_Manholes-2652	57.18	Kirkland_Manholes-2653	56.99	47.7	0.4	8	PVC	0.01	446	6	12	18	4.1	SM14-Ex-EX292	
Kirkland_Main-1615	Kirkland_Manholes-2657	43.64	Kirkland_Manholes-2656	33.93	250	3.88	8	PVC	0.01	1,389	11	31	41	3	SM14-Ex-EX291	
Kirkland_Main-1616	Kirkland_Manholes-2655	44.22	Kirkland_Manholes-2656	33.93	73.2	14.06	8	PVC	0.01	2,644	29	81	110	4.2	SM14-Ex-EX293	
Kirkland_Main-1617	Kirkland_Manholes-2656	33.93	Kirkland_Manholes-2658	29.62	118.6	3.63	8	PVC	0.01	1,344	41	118	159	11.8	SM14-Ex-EX291	
Kirkland_Main-1618	Kirkland_Manholes-2658	29.62	Kirkland_Manholes-2659	28.05	312.8	0.5	8	PVC	0.01	500	42	124	166	33.3	SM14-Ex-EX291	
Kirkland_Main-1619	Kirkland_Manholes-2659	28.05	Kirkland_Manholes-2660	26.87	281	0.42	8	PVC	0.01	457	45	130	175	38.3	SM14-Ex-EX291	
Kirkland_Main-1624	Kirkland_Manholes-2726	12.39	Kirkland_Manholes-2662	11.52	172.8	0.5	18	PVC	0.01	4,349	371	607	978	22.5	SM14-Ex-EX289	
Kirkland_Main-1625	Kirkland_Manholes-2666	55.28	Kirkland_Manholes-2667	55.1	203.4	0.09	18	PVC	0.01	1,823	184	328	512	28.1	SM14-Ex-EX222	
Kirkland_Main-1626	Kirkland_Manholes-2667	55.1	Kirkland_Manholes-2665	53.92	196.9	0.6	18	PVC	0.01	4,744	185	334	519	10.9	SM14-Ex-EX222	
Kirkland_Main-1627	Kirkland_Manholes-2665	53.92	Kirkland_Manholes-3102	53.77	398.5	0.04	18	PVC	0.01	1,189	186	341	526	44.3	SM14-Ex-EX222	
Kirkland_Main-1629	Kirkland_Manholes-2203	62.94	Kirkland_Manholes-3102	53.77	55.2	16.62	8	PVC	0.01	2,874	25	62	87	3	SM14-Ex-EX290	
Kirkland_Main-1633	Kirkland_Manholes-3101	52.44	Kirkland_Manholes-2663	50.64	51.5	3.5	18	PVC	0.01	11,462	221	440	661	5.8	SM14-Ex-EX222	
Kirkland_Main-1634	Kirkland_Manholes-250	115.74	Kirkland_Manholes-268	108.82	144.1	4.8	8	PVC	0.01	1,545	5	18	23	1.5	SM10	
Kirkland_Main-1635	Kirkland_Manholes-309	140.9	Kirkland_Manholes-308	114.39	431.7	6.14	8	PVC	0.01	1,747	3	9	12	0.7	SM10	
Kirkland_Main-1636	Kirkland_Manholes-308	114.39	Kirkland_Manholes-307	105.6	319	2.76	8	PVC	0.01	1,170	8	27	34	2.9	SM10	
Kirkland_Main-1637	Kirkland_Manholes-494	135.66	Kirkland_Manholes-307	105.6	436.1	6.89	8	PVC	0.01	1,851	3	9	12	0.7	SM10	
Kirkland_Main-1638	Kirkland_Manholes-241	14.7	Kirkland_Manholes-2765	13.19	59.4	2.54	18	PVC	0.01	9,768	494	1,174	1,668	17.1	SM3	
Kirkland_Main-1639	Kirkland_Manholes-240	17.1	Kirkland_Manholes-2765	13.19	342.3	1.14	12	PVC	0.01	2,222	192	439	932	41.9	SM14-Ex-EX42	
Kirkland_Main-1640	Kirkland_Manholes-239	27.77	Kirkland_Manholes-240	17.1	321.9	3.31	12	PVC	0.01	3,784	191	435	927	24.5	SM14-Ex-EX42	
Kirkland_Main-1641	Kirkland_Manholes-243	37.12	Kirkland_Manholes-239	27.77	158.7	5.89	12	PVC	0.01	5,046	189	426	916	18.2	SM14-Ex-EX38	
Kirkland_Main-1642	Kirkland_Manholes-244	47.57	Kirkland_Manholes-243	46.95	154.8	0.4	12	PVC	0.01	1,315	186	421	909	69.1	SM14-Ex-EX38	Drop Connection
Kirkland_Main-1643	Kirkland_Manholes-246	58	Kirkland_Manholes-244	47.57	272.3	3.83	8	PVC	0.01	1,380	186	417	904	65.5	SM14-Ex-EX38	
Kirkland_Main-1645	Kirkland_Manholes-901	304.32	Kirkland_Manholes-900	302.97	52	2.59	8	PVC	0.01	1,135	1	4	5	0.5		
Kirkland_Main-1646	Kirkland_Manholes-902	304.94	Kirkland_Manholes-900	302.97	236.8	0.83	8	PVC	0.01	643	1	4	5	0.8		
Kirkland_Main-1647	Kirkland_Manholes-900	302.97	Kirkland_Manholes-904	289.03	425.5	3.28	8	PVC	0.01	1,276	7	26	33	2.6		
Kirkland_Main-1648	Kirkland_Manholes-903	290.15	Kirkland_Manholes-904	289.03	62.2	1.8	8	PVC	0.01	946	20	64	85	9		
Kirkland_Main-1649	Kirkland_Manholes-904	289.03	Kirkland_Manholes-905	283.61	138.2	3.92	8	PVC	0.01	1,396	28	94	123	8.8		
Kirkland_Main-1650	Kirkland_Manholes-905	283.61	Kirkland_Manholes-912	277.93	121.5	4.68	8	PVC	0.01	1,525	29	99	128	8.4		
Kirkland_Main-1651	Kirkland_Manholes-906	293.01	Kirkland_Manholes-907	291.52	150.3	0.99	8	PVC	0.01	702	10	43	53	7.5		
Kirkland_Main-1652	Kirkland_Manholes-907	291.52	Kirkland_Manholes-908	290.53	109.9	0.9	8	PVC	0.01	669	11	47	59	8.8		
Kirkland_Main-1653	Kirkland_Manholes-908	290.53	Kirkland_Manholes-903	290.15	324	0.12	8	PVC	0.01	241	18	60	78	32.4		
Kirkland_Main-1654	Kirkland_Manholes-910	293.95	Kirkland_Manholes-908	290.53	193.3	1.77	8	PVC	0.01	938	6	9	14	1.5		
Kirkland_Main-1655	Kirkland_Manholes-909	297.88	Kirkland_Manholes-910	293.95	188.4	2.09	8	PVC	0.01	1,018	4	4	8	0.8		
Kirkland_Main-1656	Kirkland_Manholes-911	279.8	Kirkland_Manholes-912	277.93	207.2	0.9	8	PVC	0.01	670	3	4	7	1		
Kirkland_Main-1657	Kirkland_Manholes-912	277.93	Kirkland_Manholes-913	274.64	100.2	3.28	8	PVC	0.01	1,277	33	107	140	11		
Kirkland_Main-1658	Kirkland_Manholes-913	274.64	Kirkland_Manholes-917	265.16	288.9	3.28	8	PVC	0.01	1,277	35	112	146	11.5		
Kirkland_Main-1659	Kirkland_Manholes-890	280.21	Kirkland_Manholes-914	274.6	210.2	2.67	8	PVC	0.01	1,152	46	124	170	14.8		
Kirkland_Main-1660	Kirkland_Manholes-914	274.6	Kirkland_Manholes-915	272.06	86.6	2.93	8	PVC	0.01	1,207	50	137	187	15.5		
Kirkland_Main-1661	Kirkland_Manholes-915	272.06	Kirkland_Manholes-916	270.65	45.7	3.08	8	PVC	0.01	1,238	51	142	193	15.5		
Kirkland_Main-1662	Kirkland_Manholes-627	275.98	Kirkland_Manholes-914	274.6	212.1	0.65	8	PVC	0.01	569	3	9	12	2.1		
Kirkland_Main-1663	Kirkland_Manholes-916	270.65	Kirkland_Manholes-917	265.16	154.3	3.56	8	PVC	0.01	1,330	52	146	198	14.9		
Kirkland_Main-1664	Kirkland_Manholes-917	265.16	Kirkland_Manholes-918	264.4	332.4	0.23	12	PVC	0.01	994	88	266	354	35.6	SM14-Ex-EX136	
Kirkland_Main-1665	Kirkland_Manholes-918	264.4	Kirkland_Manholes-919	263.89	50.1	1.02	12	PVC	0.01	2,097	89	270	359	17.1	SM14-Ex-EX136	
Kirkland_Main-1666	Kirkland_Manholes-919	263.89	Kirkland_Manholes-920	263.16	175.4	0.42	12	PVC	0.01	1,341	90	275	365	27.2	SM14-Ex-EX136	
Kirkland_Main-1667	Kirkland_Manholes-687	264	Kirkland_Manholes-921	262.87	223.9	0.5	8	PVC	0.01	501	5	13	18	3.6		
Kirkland_Main-1668	Kirkland_Manholes-920	263.16	Kirkland_Manholes-921	262.87	116.1	0.25	12	PVC	0.01	1,039	91	279	370	35.6	SM14-Ex-EX136	

2035 (20-year) with Proposed Improvements - Peak Hour Flow - Pipe Capacity Table

Label	Upstream Node	Upstream Invert Elevation (ft)	Downstream Node	Downstream Invert Elevation (ft)	Length (ft)	Slope (%)	Diameter (in)	Material	Manning's n	Design Capacity (gpm)	Domestic Flow (gpm)	I/I Flow (gpm)	Total Flow (gpm)	Percent Full (%)	CIP No.	Notes
Kirkland_Main-1669	Kirkland_Manholes-2064	426.84	Kirkland_Manholes-2670	399.73	295.3	9.18	8	PVC	0.01	2,136	2	4	6	0.3		
Kirkland_Main-1670	Kirkland_Manholes-921	262.87	Kirkland_Manholes-940	262.57	126.3	0.24	12	PVC	0.01	1,013	96	296	393	38.8	SM14-Ex-EX136	
Kirkland_Main-1671	Kirkland_Manholes-940	262.57	Kirkland_Manholes-939	261.56	302.2	0.33	12	PVC	0.01	1,200	101	300	401	33.4	SM14-Ex-EX136	
Kirkland_Main-1672	Kirkland_Manholes-939	261.56	Kirkland_Manholes-938	261.15	139.9	0.29	12	PVC	0.01	1,125	102	305	407	36.1	SM14-Ex-EX136	Drop Connection
Kirkland_Main-1673	Kirkland_Manholes-925	289.69	Kirkland_Manholes-924	268.15	361.6	5.96	8	PVC	0.01	1,721	22	64	86	5		
Kirkland_Main-1674	Kirkland_Manholes-924	268.15	Kirkland_Manholes-923	268.09	97.9	0.06	15	PVC	0.01	933	199	528	727	77.9	SM14-Ex-EX138	
Kirkland_Main-1675	Kirkland_Manholes-922	269.99	Kirkland_Manholes-923	268.09	235	0.81	8	PVC	0.01	634	1	4	5	0.9		
Kirkland_Main-1676	Kirkland_Manholes-923	268.09	Kirkland_Manholes-929	267.98	60	0.18	15	PVC	0.01	1,614	201	537	737	45.7	SM14-2035-DF10	
Kirkland_Main-1678	Kirkland_Manholes-927	307.71	Kirkland_Manholes-926	302.74	56.6	8.77	8	PVC	0.01	2,089	8	9	16	0.8		
Kirkland_Main-1679	Kirkland_Manholes-926	302.74	Kirkland_Manholes-925	289.69	296	4.41	8	PVC	0.01	1,481	21	60	81	5.5		
Kirkland_Main-1680	Kirkland_Manholes-928	294.43	Kirkland_Manholes-930	277.33	346.1	4.94	8	PVC	0.01	1,567	3	4	8	0.5		
Kirkland_Main-1681	Kirkland_Manholes-930	277.33	Kirkland_Manholes-929	267.98	33.8	27.65	8	PVC	0.01	3,707	5	9	13	0.4		
Kirkland_Main-1682	Kirkland_Manholes-933	269.3	Kirkland_Manholes-932	267	200	1.15	8	PVC	0.01	756	3	4	7	0.9		
Kirkland_Main-1683	Kirkland_Manholes-929	267.98	Kirkland_Manholes-931	267.3	153.6	0.44	12	PVC	0.01	1,383	206	549	756	54.6		
Kirkland_Main-1684	Kirkland_Manholes-931	267.3	Kirkland_Manholes-932	267	103.9	0.29	12	PVC	0.01	1,117	207	554	761	68.1		
Kirkland_Main-1685	Kirkland_Manholes-932	267	Kirkland_Manholes-934	266.31	201.7	0.34	12	PVC	0.01	1,216	211	562	773	63.6		
Kirkland_Main-1686	Kirkland_Manholes-950	293.99	Kirkland_Manholes-934	266.31	270.7	10.22	8	PVC	0.01	2,254	12	34	46	2		
Kirkland_Main-1688	Kirkland_Manholes-934	266.31	Kirkland_Manholes-935	265.1	223.8	0.54	12	PVC	0.01	1,529	224	601	825	54		
Kirkland_Main-1689	Kirkland_Manholes-937	264.43	Kirkland_Manholes-938	264.12	49.3	0.62	12	PVC	0.01	1,641	238	657	895	54.6		Drop Connection
Kirkland_Main-1690	Kirkland_Manholes-936	264.57	Kirkland_Manholes-937	264.43	21.7	0.66	12	PVC	0.01	1,686	227	610	836	49.6		
Kirkland_Main-1691	Kirkland_Manholes-935	265.1	Kirkland_Manholes-936	264.57	71.3	0.74	12	PVC	0.01	1,788	226	605	832	46.5		
Kirkland_Main-1692	Kirkland_Manholes-938	257.09	Kirkland_Manholes-666	254.95	392.8	0.55	15	PVC	0.01	2,784	341	966	1,307	47		
Kirkland_Main-1693	Kirkland_Manholes-941	287.52	Kirkland_Manholes-937	264.43	281.4	8.21	8	PVC	0.01	2,020	11	43	54	2.7		
Kirkland_Main-1694	Kirkland_Manholes-942	300.01	Kirkland_Manholes-941	287.52	399.1	3.13	8	PVC	0.01	1,247	10	39	48	3.9		
Kirkland_Main-1695	Kirkland_Manholes-943	306.11	Kirkland_Manholes-944	304.9	190.1	0.64	8	PVC	0.01	563	2	4	6	1	SM14-Ex-EX137	
Kirkland_Main-1696	Kirkland_Manholes-946	335.98	Kirkland_Manholes-945	330.63	152.5	3.51	8	PVC	0.01	1,321	2	4	6	0.5		
Kirkland_Main-1697	Kirkland_Manholes-945	330.63	Kirkland_Manholes-944	304.9	238	10.81	8	PVC	0.01	2,318	3	9	12	0.5		
Kirkland_Main-1698	Kirkland_Manholes-947	299.2	Kirkland_Manholes-948	296.38	132	2.14	8	PVC	0.01	1,031	2	4	6	0.6	SM14-Ex-EX137	
Kirkland_Main-1699	Kirkland_Manholes-944	304.9	Kirkland_Manholes-948	296.38	218.3	3.9	8	PVC	0.01	1,393	6	17	23	1.7	SM14-Ex-EX137	
Kirkland_Main-1701	Kirkland_Manholes-949	295.21	Kirkland_Manholes-950	293.99	49	2.49	8	PVC	0.01	1,112	10	30	40	3.6		
Kirkland_Main-1702	Kirkland_Manholes-948	296.38	Kirkland_Manholes-949	295.21	143.9	0.81	8	PVC	0.01	636	9	26	35	5.5	SM14-Ex-EX137	
Kirkland_Main-1703	Kirkland_Manholes-951	321.2	Kirkland_Manholes-942	300.01	232.8	9.1	8	PVC	0.01	2,127	2	9	11	0.5		
Kirkland_Main-1704	Kirkland_Manholes-952	325.62	Kirkland_Manholes-951	321.2	323.7	1.37	8	PVC	0.01	824	2	4	6	0.7		
Kirkland_Main-1705	Kirkland_Manholes-953	318.51	Kirkland_Manholes-954	318.45	75.8	0.08	8	PVC	0.01	198	1	4	6	2.8		
Kirkland_Main-1706	Kirkland_Manholes-954	318.45	Kirkland_Manholes-955	318.15	133.7	0.22	8	PVC	0.01	334	2	9	11	3.2		
Kirkland_Main-1707	Kirkland_Manholes-1546	284.43	Kirkland_Manholes-1545	272.4	160.7	7.49	8	PVC	0.01	1,929	12	43	55	2.9	SM14-Ex-EX121	
Kirkland_Main-1708	Kirkland_Manholes-750	289.43	Kirkland_Manholes-1546	284.43	152.8	3.27	8	PVC	0.01	1,275	3	9	12	0.9	SM14-Ex-EX121	
Kirkland_Main-1709	Kirkland_Manholes-1553	308.15	Kirkland_Manholes-1546	284.43	340	6.98	8	PVC	0.01	1,862	8	30	39	2.1	SM14-Ex-EX122	
Kirkland_Main-1710	Kirkland_Manholes-751	298.52	Kirkland_Manholes-750	289.43	402.2	2.26	8	PVC	0.01	1,060	2	4	6	0.6	SM14-Ex-EX121	
Kirkland_Main-1711	Kirkland_Manholes-748	311.92	Kirkland_Manholes-752	265.45	362.2	12.83	8	PVC	0.01	2,525	26	60	86	3.4	SM14-Ex-EX71	
Kirkland_Main-1712	Kirkland_Manholes-753	247.15	Kirkland_Manholes-754	246.56	209.3	0.28	8	PVC	0.01	374	3	4	7	1.9		
Kirkland_Main-1713	Kirkland_Manholes-1355	420.81	Kirkland_Manholes-1357	417.32	183.1	1.91	8	PVC	0.01	973	16	39	54	5.6		
Kirkland_Main-1714	Kirkland_Manholes-1356	418.13	Kirkland_Manholes-1357	417.32	41.8	1.94	8	PVC	0.01	981	2	4	6	0.6	SM14-Ex-EX180	
Kirkland_Main-1715	Kirkland_Manholes-1357	417.32	Kirkland_Manholes-1358	410.38	295.5	2.35	8	PVC	0.01	1,080	19	47	66	6.1	SM14-Ex-EX180	
Kirkland_Main-1716	Kirkland_Manholes-1358	410.38	Kirkland_Manholes-1359	407.6	322.3	0.86	8	PVC	0.01	655	21	52	72	11	SM14-Ex-EX180	
Kirkland_Main-1717	Kirkland_Manholes-1359	407.6	Kirkland_Manholes-1364	404.91	317.2	0.85	8	PVC	0.01	649	23	56	79	12.2	SM14-Ex-EX180	
Kirkland_Main-1718	Kirkland_Manholes-1360	392.45	Kirkland_Manholes-1361	390.34	26.4	7.99	8	PVC	0.01	1,993	11	21	32	1.6	SM14-Ex-EX179	
Kirkland_Main-1719	Kirkland_Manholes-1361	390.34	Kirkland_Manholes-1371	389.7	160.2	0.4	8	PVC	0.01	446	36	86	122	27.3		Drop Connection
Kirkland_Main-1720	Kirkland_Manholes-1365	376.9	Kirkland_Manholes-1371	376.15	121.9	0.62	8	PVC	0.01	553	57	90	147	26.6		
Kirkland_Main-1721	Kirkland_Manholes-1366	377.95	Kirkland_Manholes-1365	376.9	166.8	0.63	8	PVC	0.01	559	57	86	142	25.5		
Kirkland_Main-1722	Kirkland_Manholes-1364	404.91	Kirkland_Manholes-1361	390.34	354.3	4.11	8	PVC	0.01	1,430	25	60	85	6	SM14-Ex-EX180	
Kirkland_Main-1723	Kirkland_Manholes-1362	399.37	Kirkland_Manholes-1360	392.45	312.9	2.21	8	PVC	0.01	1,049	7	17	24	2.3	SM14-Ex-EX179	
Kirkland_Main-1724	Kirkland_Manholes-1363	403.55	Kirkland_Manholes-1362	399.37	238	1.76	8	PVC	0.01	934	5	13	18	1.9	SM14-Ex-EX179	
Kirkland_Main-1726	Kirkland_Manholes-1367	392.51	Kirkland_Manholes-1906	388.2	267.7	1.61	8	PVC	0.01	895	9	4	13	1.5		
Kirkland_Main-1727	Kirkland_Manholes-1368	393.26	Kirkland_Manholes-1369	387.01	105.4	5.93	8	PVC	0.01	1,717	1	4	5	0.3	SM14-Ex-EX178	
Kirkland_Main-1728	Kirkland_Manholes-1369	387.01	Kirkland_Manholes-1370	385.7	133.5	0.98	8	PVC	0.01	698	2	9	10	1.5	SM14-Ex-EX178	
Kirkland_Main-1729	Kirkland_Manholes-1370	385.7	Kirkland_Manholes-1371	376.15	179.2	5.33	8	PVC	0.01	1,628	2	13	15	0.9	SM14-Ex-EX178	
Kirkland_Main-1730	Kirkland_Manholes-534	432.55	Kirkland_Manholes-1372	427.9	355.1	1.31	8	PVC	0.01	807	75	150	226	28	SM14-Ex-EX218	
Kirkland_Main-1731	Kirkland_Manholes-560	483.4	Kirkland_Manholes-561	481.3	94.5	2.22	8	PVC	0.01	1,051	4	9	12	1.2		
Kirkland_Main-1733	Kirkland_Manholes-561	481.3	Kirkland_Manholes-1374	479.93	141.7	0.97	8	PVC	0.01	693	5	13	18	2.6		
Kirkland_Main-1734	Kirkland_Manholes-1376	483.23	Kirkland_Manholes-1375	479.6	272.8	1.33	8	PVC	0.01	813	3	4	7	0.9		
Kirkland_Main-1735	Kirkland_Manholes-1375	479.6	Kirkland_Manholes-1377	478.89	93.1	0.76	8	PVC	0.01	616	9	26	35	5.7		

2035 (20-year) with Proposed Improvements - Peak Hour Flow - Pipe Capacity Table

Label	Upstream Node	Upstream Invert Elevation (ft)	Downstream Node	Downstream Invert Elevation (ft)	Length (ft)	Slope (%)	Diameter (in)	Material	Manning's n	Design Capacity (gpm)	Domestic Flow (gpm)	I/I Flow (gpm)	Total Flow (gpm)	Percent Full (%)	CIP No.	Notes
Kirkland_Main-1736	Kirkland_Manholes-1377	478.89	Kirkland_Manholes-1378	472.9	259	2.31	8	PVC	0.01	1,072	11	30	41	3.9		
Kirkland_Main-1737	Kirkland_Manholes-1378	472.9	Kirkland_Manholes-1379	471.21	302	0.56	8	PVC	0.01	527	15	34	50	9.4		
Kirkland_Main-1738	Kirkland_Manholes-1374	479.93	Kirkland_Manholes-1375	479.6	219.3	0.15	8	PVC	0.01	274	6	17	23	8.4		
Kirkland_Main-1739	Kirkland_Manholes-1379	471.21	Kirkland_Manholes-564	469.28	271.7	0.71	8	PVC	0.01	594	17	39	55	9.3		
Kirkland_Main-1740	Kirkland_Manholes-340	235.81	Kirkland_Manholes-341	235.59	47.2	0.47	8	PVC	0.01	482	29	86	115	23.8		
Kirkland_Main-1741	Kirkland_Manholes-341	235.59	Kirkland_Manholes-342	234.97	31.7	1.95	8	PVC	0.01	986	39	137	176	17.9	SM14-Ex-EX49	
Kirkland_Main-1742	Kirkland_Manholes-342	234.97	Kirkland_Manholes-351	234.93	111.2	0.04	12	PVC	0.01	394	39	142	181	45.9	SM14-Ex-EX49	
Kirkland_Main-1743	Kirkland_Manholes-345	279.43	Kirkland_Manholes-344	279.2	57.3	0.4	8	PVC	0.01	446	6	9	15	3.3		
Kirkland_Main-1744	Kirkland_Manholes-344	279.2	Kirkland_Manholes-346	254.2	328.7	7.61	8	PVC	0.01	1,944	8	13	21	1.1		
Kirkland_Main-1745	Kirkland_Manholes-346	254.2	Kirkland_Manholes-347	250.02	240.3	1.74	8	PVC	0.01	930	10	17	27	2.9		
Kirkland_Main-1746	Kirkland_Manholes-348	251.65	Kirkland_Manholes-347	250.02	50.6	3.22	8	PVC	0.01	1,266	2	4	7	0.5		
Kirkland_Main-1747	Kirkland_Manholes-347	250.02	Kirkland_Manholes-349	238.18	204.7	5.78	8	PVC	0.01	1,695	14	26	39	2.3		
Kirkland_Main-1748	Kirkland_Manholes-349	238.18	Kirkland_Manholes-350	235.63	111.7	2.28	8	PVC	0.01	1,065	15	30	45	4.2		
Kirkland_Main-1749	Kirkland_Manholes-1666	89.71	Kirkland_Manholes-1673	84.18	111.9	4.94	8	PVC	0.01	1,568	60	149	209	13.3		
Kirkland_Main-1750	Kirkland_Manholes-1672	91.63	Kirkland_Manholes-1666	89.71	163.9	1.17	8	PVC	0.01	763	2	8	10	1.3		
Kirkland_Main-1751	Kirkland_Manholes-1671	101.9	Kirkland_Manholes-1667	101.23	167.6	0.4	8	PVC	0.01	446	6	8	15	3.3		
Kirkland_Main-1752	Kirkland_Manholes-1669	132.92	Kirkland_Manholes-1668	119.52	315.3	4.25	8	PVC	0.01	1,454	4	8	13	0.9		
Kirkland_Main-1753	Kirkland_Manholes-1670	121.1	Kirkland_Manholes-1668	119.52	161.1	0.98	8	PVC	0.01	698	4	8	12	1.7		
Kirkland_Main-1754	Kirkland_Manholes-1673	84.18	Kirkland_Manholes-1674	78.95	158.5	3.3	8	PVC	0.01	1,281	61	157	218	17		
Kirkland_Main-1755	Kirkland_Manholes-1677	88.12	Kirkland_Manholes-1674	87.91	51.7	0.4	8	PVC	0.01	446	27	41	69	15.4		Drop Connection
Kirkland_Main-1756	Kirkland_Manholes-1675	105.24	Kirkland_Manholes-1676	98.96	116.6	5.39	8	PVC	0.01	1,636	5	8	13	0.8		
Kirkland_Main-1757	Kirkland_Manholes-859	309.2	Kirkland_Manholes-865	308.29	290.7	0.31	8	PVC	0.01	394	27	82	108	27.5	SM14-Ex-EX51	
Kirkland_Main-1758	Kirkland_Manholes-860	317.71	Kirkland_Manholes-859	309.2	202.9	4.19	8	PVC	0.01	1,444	22	73	95	6.6	SM14-Ex-EX52	
Kirkland_Main-1759	Kirkland_Manholes-861	327.02	Kirkland_Manholes-860	317.71	236.9	3.93	8	PVC	0.01	1,398	20	69	88	6.3	SM14-Ex-EX52	
Kirkland_Main-1760	Kirkland_Manholes-856	333.21	Kirkland_Manholes-861	327.02	162.2	3.82	8	PVC	0.01	1,377	18	64	82	6	SM14-Ex-EX52	
Kirkland_Main-1761	Kirkland_Manholes-862	335.56	Kirkland_Manholes-856	333.21	185.2	1.27	8	PVC	0.01	794	2	4	6	0.8	SM14-Ex-EX53	
Kirkland_Main-1762	Kirkland_Manholes-2254	240.28	Kirkland_Manholes-2253	239.74	205.7	0.26	8	PVC	0.01	361	0	4	5	1.3	SM14-Ex-EX247	
Kirkland_Main-1763	Kirkland_Manholes-863	341.24	Kirkland_Manholes-864	334.74	171.5	3.79	8	PVC	0.01	1,373	2	4	6	0.4	SM14-Ex-EX50	
Kirkland_Main-1764	Kirkland_Manholes-864	334.74	Kirkland_Manholes-865	308.29	391.4	6.76	8	PVC	0.01	1,833	4	9	13	0.7	SM14-Ex-EX50	
Kirkland_Main-1765	Kirkland_Manholes-866	314.35	Kirkland_Manholes-865	308.29	226.5	2.68	8	PVC	0.01	1,153	10	30	40	3.5	SM14-Ex-EX35	
Kirkland_Main-1766	Kirkland_Manholes-865	308.29	Kirkland_Manholes-392	305	233.2	1.41	8	PVC	0.01	837	43	124	168	20.1	SM14-Ex-EX50	
Kirkland_Main-1767	Kirkland_Manholes-867	319	Kirkland_Manholes-866	314.35	119.3	3.9	8	PVC	0.01	1,392	8	26	34	2.4	SM14-Ex-EX35	
Kirkland_Main-1768	Kirkland_Manholes-868	321.84	Kirkland_Manholes-867	319	90.7	3.13	8	PVC	0.01	1,247	7	21	29	2.3	SM14-Ex-EX35	
Kirkland_Main-1769	Kirkland_Manholes-869	325.94	Kirkland_Manholes-868	321.84	101.3	4.05	8	PVC	0.01	1,418	6	17	23	1.7	SM14-Ex-EX35	
Kirkland_Main-1770	Kirkland_Manholes-870	327.4	Kirkland_Manholes-869	325.94	99.3	1.47	8	PVC	0.01	855	2	4	6	0.7	SM14-Ex-EX35	
Kirkland_Main-1771	Kirkland_Manholes-871	340.54	Kirkland_Manholes-872	339.98	74.2	0.75	8	PVC	0.01	612	1	4	6	0.9	SM14-Ex-EX35	
Kirkland_Main-1772	Kirkland_Manholes-872	339.98	Kirkland_Manholes-869	325.94	265.2	5.29	8	PVC	0.01	1,622	3	9	12	0.7	SM14-Ex-EX35	
Kirkland_Main-1773	Kirkland_Manholes-874	310.68	Kirkland_Manholes-382	308.23	108.1	2.27	8	PVC	0.01	1,062	2	4	6	0.6		
Kirkland_Main-1774	Kirkland_Manholes-875	310.4	Kirkland_Manholes-1073	302.05	254.5	3.28	8	PVC	0.01	1,277	3	4	8	0.6		
Kirkland_Main-1775	Kirkland_Manholes-2900	302.3	Kirkland_Manholes-876	301.25	160.8	0.65	8	PVC	0.01	570	12	43	55	9.7		
Kirkland_Main-1776	Kirkland_Manholes-876	301.25	Kirkland_Manholes-337	291.09	336.8	3.02	8	PVC	0.01	1,225	18	64	83	6.8		
Kirkland_Main-1777	Kirkland_Manholes-877	295.2	Kirkland_Manholes-884	291.06	114.3	3.62	8	PVC	0.01	1,342	1	4	5	0.4		
Kirkland_Main-1778	Kirkland_Manholes-884	291.06	Kirkland_Manholes-881	290.87	47	0.4	8	PVC	0.01	446	4	13	17	3.9		
Kirkland_Main-1779	Kirkland_Manholes-705	293.8	Kirkland_Manholes-884	291.06	213.2	1.29	8	PVC	0.01	800	2	4	7	0.8		
Kirkland_Main-1780	Kirkland_Manholes-881	290.87	Kirkland_Manholes-885	286.75	194.6	2.12	8	PVC	0.01	1,026	21	64	86	8.3		
Kirkland_Main-1781	Kirkland_Manholes-880	294.11	Kirkland_Manholes-881	290.87	199.3	1.63	8	PVC	0.01	899	16	47	63	7		
Kirkland_Main-1782	Kirkland_Manholes-879	310.92	Kirkland_Manholes-880	294.11	360	4.67	8	PVC	0.01	1,524	14	43	57	3.8		
Kirkland_Main-1783	Kirkland_Manholes-878	325.66	Kirkland_Manholes-879	310.92	320.8	4.59	8	PVC	0.01	1,511	12	39	50	3.3		
Kirkland_Main-1784	Kirkland_Manholes-886	291.6	Kirkland_Manholes-885	286.75	178.8	2.71	8	PVC	0.01	1,161	5	13	18	1.6		
Kirkland_Main-1785	Kirkland_Manholes-887	294.74	Kirkland_Manholes-886	291.6	177.9	1.77	8	PVC	0.01	937	4	9	13	1.3		
Kirkland_Main-1786	Kirkland_Manholes-888	307.6	Kirkland_Manholes-887	294.74	260	4.95	8	PVC	0.01	1,568	2	4	6	0.4		
Kirkland_Main-1788	Kirkland_Manholes-885	286.75	Kirkland_Manholes-889	285.3	34.9	4.16	8	PVC	0.01	1,437	27	82	109	7.6		
Kirkland_Main-1789	Kirkland_Manholes-336	286.9	Kirkland_Manholes-889	285.3	212.5	0.75	8	PVC	0.01	612	2	4	7	1.1		
Kirkland_Main-1790	Kirkland_Manholes-889	285.3	Kirkland_Manholes-890	280.21	299.8	1.7	8	PVC	0.01	919	31	90	121	13.2		
Kirkland_Main-1791	Kirkland_Manholes-891	282.85	Kirkland_Manholes-890	280.21	269.2	0.98	8	PVC	0.01	698	13	30	43	6.2		
Kirkland_Main-1792	Kirkland_Manholes-892	286	Kirkland_Manholes-891	282.85	80.7	3.9	8	PVC	0.01	1,393	11	26	36	2.6		
Kirkland_Main-1793	Kirkland_Manholes-895	303.91	Kirkland_Manholes-896	303.5	71	0.58	8	PVC	0.01	536	1	4	6	1		
Kirkland_Main-1794	Kirkland_Manholes-896	303.5	Kirkland_Manholes-893	293.25	259.5	3.95	8	PVC	0.01	1,401	5	13	18	1.3		
Kirkland_Main-1795	Kirkland_Manholes-894	293.53	Kirkland_Manholes-893	293.25	69.8	0.4	8	PVC	0.01	446	2	4	6	1.4		
Kirkland_Main-1796	Kirkland_Manholes-893	293.25	Kirkland_Manholes-892	286	208.9	3.47	8	PVC	0.01	1,314	8	21	30	2.3		
Kirkland_Main-1797	Kirkland_Manholes-897	317.07	Kirkland_Manholes-896	303.5	263.1	5.16	8	PVC	0.01	1,601	2	4	6	0.4		
Kirkland_Main-1798	Kirkland_Manholes-955	318.15	Kirkland_Manholes-956	317.42	90.2	0.81	8	PVC	0.01	634	2	13	15	2.4		

2035 (20-year) with Proposed Improvements - Peak Hour Flow - Pipe Capacity Table

Label	Upstream Node	Upstream Invert Elevation (ft)	Downstream Node	Downstream Invert Elevation (ft)	Length (ft)	Slope (%)	Diameter (in)	Material	Manning's n	Design Capacity (gpm)	Domestic Flow (gpm)	I/I Flow (gpm)	Total Flow (gpm)	Percent Full (%)	CIP No.	Notes
Kirkland_Main-1799	Kirkland_Manholes-956	317.42	Kirkland_Manholes-957	315.92	143.6	1.04	8	PVC	0.01	720	4	17	21	2.9		
Kirkland_Main-1800	Kirkland_Manholes-1294	129.1	Kirkland_Manholes-1295	119.7	303.2	3.1	8	PVC	0.01	1,242	4	8	13	1	SM14-Ex-EX115	
Kirkland_Main-1801	Kirkland_Manholes-1296	129.32	Kirkland_Manholes-1295	119.7	314.4	3.06	8	PVC	0.01	1,233	93	297	390	31.7	SM6	
Kirkland_Main-1802	Kirkland_Manholes-1301	241.1	Kirkland_Manholes-1300	221.25	201.1	9.87	8	PVC	0.01	2,215	5	17	21	1	SM14-Ex-EX98	
Kirkland_Main-1803	Kirkland_Manholes-1299	227.62	Kirkland_Manholes-1300	221.25	159.1	4	8	PVC	0.01	1,411	3	8	11	0.8	SM14-Ex-EX101	
Kirkland_Main-1804	Kirkland_Manholes-1300	221.25	Kirkland_Manholes-1250	210.15	248.6	4.47	8	PVC	0.01	1,490	9	33	42	2.8	SM14-Ex-EX101	
Kirkland_Main-1805	Kirkland_Manholes-1303	126.2	Kirkland_Manholes-1295	119.7	386.9	1.68	8	PVC	0.01	914	4	8	12	1.3	SM14-Ex-EX115	
Kirkland_Main-1806	Kirkland_Manholes-1304	180.12	Kirkland_Manholes-1258	154.28	295.6	8.74	8	PVC	0.01	2,084	8	25	33	1.6	SM14-Ex-EX106	
Kirkland_Main-1807	Kirkland_Manholes-1306	225.07	Kirkland_Manholes-227	223.31	140.1	1.26	8	PVC	0.01	790	9	27	36	4.5		
Kirkland_Main-1808	Kirkland_Manholes-1309	233.16	Kirkland_Manholes-1308	229.72	344.3	1	8	PVC	0.01	705	2	8	10	1.4		
Kirkland_Main-1809	Kirkland_Manholes-1308	229.72	Kirkland_Manholes-1307	211.15	175.8	10.56	8	PVC	0.01	2,292	6	17	22	1		
Kirkland_Main-1810	Kirkland_Manholes-1307	211.15	Kirkland_Manholes-1252	181.71	226.9	12.97	8	PVC	0.01	2,540	10	25	34	1.4	SM14-Ex-EX100	
Kirkland_Main-1812	Kirkland_Manholes-1275	185.58	Kirkland_Manholes-1276	172.95	322.8	3.91	8	PVC	0.01	1,395	3	8	12	0.8		
Kirkland_Main-1813	Kirkland_Manholes-1279	163.99	Kirkland_Manholes-1278	160.09	249.2	1.56	8	PVC	0.01	882	7	25	32	3.6	SM14-Ex-EX103	
Kirkland_Main-1814	Kirkland_Manholes-1597	180.84	Kirkland_Manholes-1601	173.67	138.4	5.18	8	PVC	0.01	1,605	73	172	245	15.3	SM14-Ex-EX121	
Kirkland_Main-1815	Kirkland_Manholes-1603	202.22	Kirkland_Manholes-1602	196.74	63.2	8.68	8	PVC	0.01	2,077	92	245	337	16.2	SM14-Ex-EX172	
Kirkland_Main-1817	Kirkland_Manholes-1570	121.83	Kirkland_Manholes-1604	117.22	301	1.53	8	PVC	0.01	872	5	8	13	1.5	SM14-Ex-EX120	
Kirkland_Main-1818	Kirkland_Manholes-1604	117.22	Kirkland_Manholes-1608	108.38	320.2	2.76	8	PVC	0.01	1,171	12	50	62	5.3	SM14-Ex-EX119	
Kirkland_Main-1823	Kirkland_Manholes-1607	115.82	Kirkland_Manholes-1608	108.38	281.1	2.65	8	PVC	0.01	1,147	3	8	11	1		
Kirkland_Main-1824	Kirkland_Manholes-1608	108.38	Kirkland_Manholes-1609	99.56	224.5	3.93	8	PVC	0.01	1,397	16	66	82	5.8	SM14-Ex-EX119	
Kirkland_Main-1825	Kirkland_Manholes-1609	99.56	Kirkland_Manholes-1610	98.61	103.1	0.92	8	PVC	0.01	677	17	74	91	13.4	SM14-Ex-EX119	
Kirkland_Main-1826	Kirkland_Manholes-1615	109.23	Kirkland_Manholes-1610	98.61	252.9	4.2	8	PVC	0.01	1,445	5	17	21	1.5		
Kirkland_Main-1827	Kirkland_Manholes-1610	98.61	Kirkland_Manholes-1611	98.01	137.6	0.44	8	PVC	0.01	466	22	99	121	26.1	SM14-Ex-EX160	
Kirkland_Main-1828	Kirkland_Manholes-1611	98.01	Kirkland_Manholes-1614	91.09	116.4	5.94	8	PVC	0.01	1,719	23	107	130	7.6	SM14-Ex-EX167	
Kirkland_Main-1830	Kirkland_Manholes-350	235.63	Kirkland_Manholes-351	234.93	99	0.71	8	PVC	0.01	593	17	34	51	8.6		
Kirkland_Main-1831	Kirkland_Manholes-351	234.93	Kirkland_Manholes-352	234.2	197.8	0.37	8	PVC	0.01	428	57	180	237	55.3		
Kirkland_Main-1832	Kirkland_Manholes-353	237.24	Kirkland_Manholes-352	234.2	58.3	5.21	8	PVC	0.01	1,609	1	9	10	0.6		
Kirkland_Main-1833	Kirkland_Manholes-354	240.05	Kirkland_Manholes-353	237.24	111.3	2.52	8	PVC	0.01	1,120	1	4	5	0.4		
Kirkland_Main-1834	Kirkland_Manholes-355	245.23	Kirkland_Manholes-357	224.18	289.7	7.27	8	PVC	0.01	1,901	2	4	7	0.4		
Kirkland_Main-1835	Kirkland_Manholes-357	224.18	Kirkland_Manholes-356	218.57	38.2	14.7	8	PVC	0.01	2,703	3	9	12	0.4		
Kirkland_Main-1836	Kirkland_Manholes-356	218.57	Kirkland_Manholes-358	217.4	168.8	0.69	21	PVC	0.01	7,697	832	2,082	2,914	37.9		
Kirkland_Main-1837	Kirkland_Manholes-358	217.4	Kirkland_Manholes-362	216.81	209.2	0.28	21	PVC	0.01	4,910	832	2,086	2,919	59.4		
Kirkland_Main-1838	Kirkland_Manholes-365	215.67	Kirkland_Manholes-366	214.9	145.3	0.53	8	PVC	0.01	513	1	4	6	1.1		
Kirkland_Main-1839	Kirkland_Manholes-366	214.9	Kirkland_Manholes-367	213.02	57.5	3.27	8	PVC	0.01	1,275	2	9	11	0.8		
Kirkland_Main-1840	Kirkland_Manholes-364	215.51	Kirkland_Manholes-367	213.02	231.6	1.07	18	PVC	0.01	6,354	850	2,146	2,996	47.1		
Kirkland_Main-1841	Kirkland_Manholes-363	216.4	Kirkland_Manholes-3048	215.92	195.5	0.25	21	PVC	0.01	4,581	840	2,108	2,948	64.3		
Kirkland_Main-1842	Kirkland_Manholes-361	216.74	Kirkland_Manholes-363	216.4	169.2	0.2	21	PVC	0.01	4,140	839	2,103	2,943	71.1		
Kirkland_Main-1843	Kirkland_Manholes-359	233.48	Kirkland_Manholes-360	230.84	309.4	0.85	8	PVC	0.01	651	3	4	8	1.2		
Kirkland_Main-1844	Kirkland_Manholes-360	230.84	Kirkland_Manholes-361	216.74	103.8	13.58	8	PVC	0.01	2,599	5	9	14	0.5		
Kirkland_Main-1845	Kirkland_Manholes-400	274.94	Kirkland_Manholes-399	268.35	106.2	6.21	8	PVC	0.01	1,757	2	4	6	0.4		
Kirkland_Main-1846	Kirkland_Manholes-399	268.35	Kirkland_Manholes-394	266.89	274.5	0.53	8	PVC	0.01	514	4	9	12	2.4		
Kirkland_Main-1847	Kirkland_Manholes-405	259.21	Kirkland_Manholes-404	259.2	31.6	0.03	8	PVC	0.01	125	0	4	5	3.7		
Kirkland_Main-1848	Kirkland_Manholes-404	259.2	Kirkland_Manholes-403	257.79	99.7	1.41	8	PVC	0.01	839	1	9	10	1.2		
Kirkland_Main-1849	Kirkland_Manholes-403	257.79	Kirkland_Manholes-402	257.52	55.3	0.49	8	PVC	0.01	493	2	13	15	3		
Kirkland_Main-1850	Kirkland_Manholes-402	257.52	Kirkland_Manholes-401	256.8	97.3	0.74	8	PVC	0.01	607	3	17	20	3.3		
Kirkland_Main-1851	Kirkland_Manholes-401	256.8	Kirkland_Manholes-395	253.88	284.1	1.03	8	PVC	0.01	715	4	21	26	3.6		
Kirkland_Main-1852	Kirkland_Manholes-406	288.66	Kirkland_Manholes-393	288.03	160.6	0.39	8	PVC	0.01	442	3	4	7	1.6		
Kirkland_Main-1853	Kirkland_Manholes-410	278.41	Kirkland_Manholes-409	264.84	185.6	7.31	8	PVC	0.01	1,906	2	4	6	0.3		
Kirkland_Main-1854	Kirkland_Manholes-425	290.3	Kirkland_Manholes-420	281.46	112.7	7.84	8	PVC	0.01	1,974	9	30	39	2		
Kirkland_Main-1855	Kirkland_Manholes-370	206.64	Kirkland_Manholes-2869	204.84	75.1	2.4	18	PVC	0.01	9,487	870	2,202	3,072	32.4		
Kirkland_Main-1856	Kirkland_Manholes-436	58.61	Kirkland_Manholes-437	58.56	24.6	0.22	15	PVC	0.01	1,769	326	674	1,000	56.5	SM14-Ex-EX30	
Kirkland_Main-1857	Kirkland_Manholes-437	58.56	Kirkland_Manholes-188	58.06	273	0.18	15	PVC	0.01	1,613	332	687	1,019	63.2	SM14-Ex-EX30	
Kirkland_Main-1858	Kirkland_Manholes-450	130.07	Kirkland_Manholes-448	127.19	147.1	1.96	8	PVC	0.01	987	8	18	26	2.6		
Kirkland_Main-1859	Kirkland_Manholes-448	127.19	Kirkland_Manholes-449	124.43	143	1.93	8	PVC	0.01	979	8	22	30	3.1		
Kirkland_Main-1860	Kirkland_Manholes-449	124.43	Kirkland_Manholes-446	123.86	143.4	0.4	8	PVC	0.01	446	8	27	35	7.9		Drop Connection
Kirkland_Main-1861	Kirkland_Manholes-447	95.3	Kirkland_Manholes-446	94.25	125.1	0.84	8	PVC	0.01	646	0	4	5	0.7		
Kirkland_Main-1862	Kirkland_Manholes-445	128.4	Kirkland_Manholes-444	92.89	173.2	20.5	8	PVC	0.01	3,192	0	4	5	0.1		
Kirkland_Main-1863	Kirkland_Manholes-446	94.25	Kirkland_Manholes-444	92.89	143.2	0.95	8	PVC	0.01	687	9	36	45	6.5		
Kirkland_Main-1864	Kirkland_Manholes-1522	291.35	Kirkland_Manholes-145	271.65	161.3	12.21	8	PVC	0.01	2,464	3	9	12	0.5		
Kirkland_Main-1865	Kirkland_Manholes-145	271.65	Kirkland_Manholes-1315	270.9	108.1	0.69	8	PVC	0.01	587	20	52	72	12.2		
Kirkland_Main-1866	Kirkland_Manholes-1314	312.02	Kirkland_Manholes-1522	291.35	177.8	11.62	8	PVC	0.01	2,404	2	4	6	0.3		
Kirkland_Main-1867	Kirkland_Manholes-1515	261.7	Kirkland_Manholes-1516	259.7	167.2	1.2	8	PVC	0.01	771	50	159	209	27.1	SM14-Ex-EX131	

2035 (20-year) with Proposed Improvements - Peak Hour Flow - Pipe Capacity Table

Label	Upstream Node	Upstream Invert Elevation (ft)	Downstream Node	Downstream Invert Elevation (ft)	Length (ft)	Slope (%)	Diameter (in)	Material	Manning's n	Design Capacity (gpm)	Domestic Flow (gpm)	I/I Flow (gpm)	Total Flow (gpm)	Percent Full (%)	CIP No.	Notes
Kirkland_Main-1868	Kirkland_Manholes-1516	259.7	Kirkland_Manholes-1593	256.67	397.6	0.76	8	PVC	0.01	615	54	163	217	35.3	SM14-Ex-EX131	
Kirkland_Main-1869	Kirkland_Manholes-1520	262.79	Kirkland_Manholes-1517	262.15	299	0.21	8	PVC	0.01	326	2	4	6	2	SM14-Ex-EX129	
Kirkland_Main-1870	Kirkland_Manholes-1518	277.88	Kirkland_Manholes-1517	262.15	157.4	10	8	PVC	0.01	2,229	16	30	46	2.1	SM14-Ex-EX124	
Kirkland_Main-1871	Kirkland_Manholes-1517	262.15	Kirkland_Manholes-1592	255.76	316.1	2.02	8	PVC	0.01	1,002	20	39	58	5.8	SM14-Ex-EX124	
Kirkland_Main-1872	Kirkland_Manholes-1519	265	Kirkland_Manholes-1521	258.62	235.2	2.71	8	PVC	0.01	1,161	2	4	6	0.5	SM14-Ex-EX128	
Kirkland_Main-1873	Kirkland_Manholes-1521	258.62	Kirkland_Manholes-1524	207.32	404.3	12.69	8	PVC	0.01	2,512	3	9	12	0.5	SM14-Ex-EX128	
Kirkland_Main-1874	Kirkland_Manholes-1552	337.73	Kirkland_Manholes-761	326.09	158.4	7.35	8	PVC	0.01	1,911	2	4	6	0.3	SM14-Ex-EX124	
Kirkland_Main-1875	Kirkland_Manholes-761	326.09	Kirkland_Manholes-760	311.91	217.3	6.53	8	PVC	0.01	1,801	6	9	14	0.8	SM14-Ex-EX124	
Kirkland_Main-1876	Kirkland_Manholes-760	311.91	Kirkland_Manholes-1538	302.73	273.6	3.36	8	PVC	0.01	1,292	8	13	21	1.6	SM14-Ex-EX124	
Kirkland_Main-1877	Kirkland_Manholes-1542	314.5	Kirkland_Manholes-1541	294.69	208.5	9.5	8	PVC	0.01	2,173	2	4	6	0.3	SM14-Ex-EX123	
Kirkland_Main-1878	Kirkland_Manholes-1540	296.8	Kirkland_Manholes-1541	294.69	76	2.78	8	PVC	0.01	1,175	5	9	13	1.1	SM14-Ex-EX123	
Kirkland_Main-1879	Kirkland_Manholes-1539	301.51	Kirkland_Manholes-1540	296.8	362.1	1.3	8	PVC	0.01	804	4	4	8	1	SM14-Ex-EX123	
Kirkland_Main-1880	Kirkland_Manholes-1523	194.94	Kirkland_Manholes-1597	180.84	315.7	4.47	8	PVC	0.01	1,490	63	155	217	14.6	SM14-Ex-EX121	
Kirkland_Main-1881	Kirkland_Manholes-1524	207.32	Kirkland_Manholes-1523	194.94	95.1	13.01	8	PVC	0.01	2,543	5	13	18	0.7	SM14-Ex-EX128	
Kirkland_Main-1882	Kirkland_Manholes-1528	217.87	Kirkland_Manholes-1523	194.94	317.2	7.23	8	PVC	0.01	1,896	56	137	194	10.2	SM14-Ex-EX121	
Kirkland_Main-1883	Kirkland_Manholes-1525	281.6	Kirkland_Manholes-1526	273.99	396.4	1.92	8	PVC	0.01	977	2	4	6	0.7	SM14-Ex-EX127	
Kirkland_Main-1884	Kirkland_Manholes-1526	273.99	Kirkland_Manholes-1527	258.94	183.5	8.2	8	PVC	0.01	2,019	4	9	12	0.6	SM14-Ex-EX127	
Kirkland_Main-1885	Kirkland_Manholes-1527	258.94	Kirkland_Manholes-1528	217.87	397.7	10.33	8	PVC	0.01	2,266	6	13	19	0.8	SM14-Ex-EX127	
Kirkland_Main-1886	Kirkland_Manholes-1535	304.79	Kirkland_Manholes-1534	301.8	155.7	1.92	8	PVC	0.01	977	1	4	5	0.5	SM14-Ex-EX126	
Kirkland_Main-1887	Kirkland_Manholes-1534	301.8	Kirkland_Manholes-1533	294.07	244.9	3.16	8	PVC	0.01	1,253	2	9	11	0.8	SM14-Ex-EX126	
Kirkland_Main-1888	Kirkland_Manholes-775	172.73	KC_Manholes-5	169.15	345.4	1.04	8	PVC	0.01	718	9	34	43	6		
Kirkland_Main-1889	Kirkland_Manholes-774	192.94	KC_Manholes-5	169.15	221.2	10.75	8	PVC	0.01	2,312	4	9	12	0.5		
Kirkland_Main-1890	Kirkland_Manholes-773	227.51	Kirkland_Manholes-774	192.94	170.2	20.31	8	PVC	0.01	3,177	2	4	6	0.2		
Kirkland_Main-1891	Kirkland_Manholes-772	214.68	Kirkland_Manholes-771	213.99	63.9	1.08	8	PVC	0.01	733	1	4	6	0.8		
Kirkland_Main-1892	Kirkland_Manholes-443	91.49	Kirkland_Manholes-442	83.66	233.7	3.35	8	PVC	0.01	1,291	52	49	101	7.8		
Kirkland_Main-1893	Kirkland_Manholes-442	83.66	Kirkland_Manholes-441	83.38	212.8	0.13	8	PVC	0.01	256	52	54	106	41.3		
Kirkland_Main-1894	Kirkland_Manholes-441	83.38	Kirkland_Manholes-433	80.24	108	2.91	8	PVC	0.01	1,202	52	58	110	9.2		
Kirkland_Main-1895	Kirkland_Manholes-432	97.11	Kirkland_Manholes-433	80.24	205.7	8.2	12	PVC	0.01	5,954	184	375	559	9.4	SM14-Ex-EX30	
Kirkland_Main-1896	Kirkland_Manholes-426	144.6	Kirkland_Manholes-427	143.58	254.5	0.4	12	PVC	0.01	1,315	176	348	524	39.9	SM14-Ex-EX30	
Kirkland_Main-1897	Kirkland_Manholes-427	143.58	Kirkland_Manholes-428	141.37	251.3	0.88	12	PVC	0.01	1,950	183	353	535	27.5	SM14-Ex-EX30	
Kirkland_Main-1898	Kirkland_Manholes-428	141.37	Kirkland_Manholes-429	138.12	320.6	1.01	12	PVC	0.01	2,093	183	357	540	25.8	SM14-Ex-EX30	
Kirkland_Main-1899	Kirkland_Manholes-429	138.12	Kirkland_Manholes-430	132.21	248.9	2.37	12	PVC	0.01	3,203	183	361	545	17	SM14-Ex-EX30	
Kirkland_Main-1900	Kirkland_Manholes-430	132.21	Kirkland_Manholes-431	114.37	310.4	5.75	12	PVC	0.01	4,983	184	366	550	11	SM14-Ex-EX30	
Kirkland_Main-1901	Kirkland_Manholes-431	114.37	Kirkland_Manholes-432	97.11	290.4	5.94	12	PVC	0.01	5,068	184	370	555	10.9	SM14-Ex-EX30	
Kirkland_Main-1902	Kirkland_Manholes-433	80.24	Kirkland_Manholes-434	74.08	187.9	3.28	12	PVC	0.01	3,764	237	437	675	17.9	SM14-Ex-EX30	
Kirkland_Main-1903	Kirkland_Manholes-434	74.08	Kirkland_Manholes-435	64.4	325.2	2.98	12	PVC	0.01	3,586	237	442	679	18.9	SM14-Ex-EX30	
Kirkland_Main-1904	Kirkland_Manholes-439	82.56	Kirkland_Manholes-438	74.46	270.1	3	8	PVC	0.01	1,221	0	4	5	0.4		
Kirkland_Main-1905	Kirkland_Manholes-438	74.46	Kirkland_Manholes-435	64.4	260.6	3.86	8	PVC	0.01	1,385	87	223	310	22.4	SM14-Ex-EX31	
Kirkland_Main-1906	Kirkland_Manholes-435	64.4	Kirkland_Manholes-436	58.61	312.5	1.85	12	PVC	0.01	2,828	325	669	995	35.2	SM14-Ex-EX30	
Kirkland_Main-1907	Kirkland_Manholes-1018	179.75	Kirkland_Manholes-451	173.02	146.6	4.59	8	PVC	0.01	1,511	75	179	253	16.8	SM14-Ex-EX31	
Kirkland_Main-1908	Kirkland_Manholes-453	159.42	Kirkland_Manholes-454	126.39	122.9	26.88	8	PVC	0.01	3,655	78	192	270	7.4	SM14-Ex-EX31	
Kirkland_Main-1909	Kirkland_Manholes-440	131.78	Kirkland_Manholes-454	126.39	361.7	1.49	8	PVC	0.01	861	7	18	25	2.9	SM14-Ex-EX31	
Kirkland_Main-1910	Kirkland_Manholes-1026	149.27	Kirkland_Manholes-440	131.78	156.8	11.16	8	PVC	0.01	2,355	7	13	20	0.8		
Kirkland_Main-1911	Kirkland_Manholes-451	173.02	Kirkland_Manholes-452	170.49	70.2	3.6	8	PVC	0.01	1,339	76	183	259	19.3	SM14-Ex-EX31	
Kirkland_Main-1912	Kirkland_Manholes-452	170.49	Kirkland_Manholes-453	159.42	88.9	12.45	8	PVC	0.01	2,488	76	187	264	10.6	SM14-Ex-EX31	
Kirkland_Main-1913	Kirkland_Manholes-454	126.39	Kirkland_Manholes-438	74.46	305.4	17.01	8	PVC	0.01	2,907	87	214	301	10.3	SM14-Ex-EX31	
Kirkland_Main-1914	Kirkland_Manholes-484	295.92	Kirkland_Manholes-483	294.22	69.9	2.43	8	PVC	0.01	1,098	2	4	7	0.6		
Kirkland_Main-1915	Kirkland_Manholes-483	294.22	Kirkland_Manholes-482	293.97	63.5	0.4	8	PVC	0.01	446	3	9	11	2.5		
Kirkland_Main-1916	Kirkland_Manholes-481	300.21	Kirkland_Manholes-482	293.97	44.6	13.98	8	PVC	0.01	2,636	11	43	54	2		
Kirkland_Main-1917	Kirkland_Manholes-477	317.64	Kirkland_Manholes-481	300.21	198.9	8.76	8	PVC	0.01	2,087	10	39	49	2.3		
Kirkland_Main-1918	Kirkland_Manholes-478	318.91	Kirkland_Manholes-477	317.64	130.7	0.97	8	PVC	0.01	695	8	34	43	6.1		
Kirkland_Main-1919	Kirkland_Manholes-479	328.09	Kirkland_Manholes-478	318.91	81.5	11.27	8	PVC	0.01	2,367	8	30	38	1.6		
Kirkland_Main-1920	Kirkland_Manholes-476	330.32	Kirkland_Manholes-475	322.42	166.4	4.75	8	PVC	0.01	1,536	2	4	6	0.4		
Kirkland_Main-1921	Kirkland_Manholes-475	322.42	Kirkland_Manholes-473	288.65	238.6	14.15	8	PVC	0.01	2,653	4	9	12	0.5		
Kirkland_Main-1922	Kirkland_Manholes-474	290.07	Kirkland_Manholes-473	288.65	187.1	0.76	8	PVC	0.01	614	3	4	7	1.2		
Kirkland_Main-1923	Kirkland_Manholes-473	288.65	Kirkland_Manholes-468	238.51	297.1	16.88	8	PVC	0.01	2,896	7	17	25	0.8		
Kirkland_Main-1924	Kirkland_Manholes-468	238.51	Kirkland_Manholes-462	219.91	120.9	15.39	8	PVC	0.01	2,766	8	21	30	1.1		
Kirkland_Main-1925	Kirkland_Manholes-463	227.23	Kirkland_Manholes-462	219.91	71.2	10.28	8	PVC	0.01	2,261	3	9	11	0.5		
Kirkland_Main-1926	Kirkland_Manholes-464	254.44	Kirkland_Manholes-463	227.23	171	15.91	8	PVC	0.01	2,812	2	4	7	0.2		
Kirkland_Main-1927	Kirkland_Manholes-462	219.91	Kirkland_Manholes-465	166.54	349.5	15.27	8	PVC	0.01	2,755	11	34	46	1.7		
Kirkland_Main-1928	Kirkland_Manholes-465	166.54	Kirkland_Manholes-466	159.47	196.4	3.6	8	PVC	0.01	1,338	12	39	51	3.8		
Kirkland_Main-1929	Kirkland_Manholes-467	166.95	Kirkland_Manholes-466	159.47	59.4	12.59	8	PVC	0.01	2,502	7	17	24	0.9		

2035 (20-year) with Proposed Improvements - Peak Hour Flow - Pipe Capacity Table

Label	Upstream Node	Upstream Invert Elevation (ft)	Downstream Node	Downstream Invert Elevation (ft)	Length (ft)	Slope (%)	Diameter (in)	Material	Manning's n	Design Capacity (gpm)	Domestic Flow (gpm)	I/I Flow (gpm)	Total Flow (gpm)	Percent Full (%)	CIP No.	Notes
Kirkland_Main-1930	Kirkland_Manholes-469	217.48	Kirkland_Manholes-470	207.2	162.3	6.34	8	PVC	0.01	1,775	1	4	5	0.3		
Kirkland_Main-1931	Kirkland_Manholes-471	208.89	Kirkland_Manholes-470	207.2	106.2	1.59	8	PVC	0.01	889	1	4	5	0.6		
Kirkland_Main-1932	Kirkland_Manholes-470	207.2	Kirkland_Manholes-472	192.62	137.7	10.59	8	PVC	0.01	2,294	3	13	16	0.7		
Kirkland_Main-1934	Kirkland_Manholes-489	206.41	Kirkland_Manholes-467	166.95	178.4	22.12	8	PVC	0.01	3,316	6	13	19	0.6		
Kirkland_Main-1935	Kirkland_Manholes-491	317.17	Kirkland_Manholes-492	300.1	240.7	7.09	8	PVC	0.01	1,878	4	9	12	0.7		
Kirkland_Main-1936	Kirkland_Manholes-492	300.1	Kirkland_Manholes-778	273.49	272.5	9.76	8	PVC	0.01	2,203	5	13	18	0.8		
Kirkland_Main-1937	Kirkland_Manholes-778	273.49	Kirkland_Manholes-783	251.91	166.5	12.96	8	PVC	0.01	2,539	6	17	23	0.9		
Kirkland_Main-1938	Kirkland_Manholes-783	251.91	Kirkland_Manholes-782	245.67	36.9	16.9	8	PVC	0.01	2,898	26	99	125	4.3		
Kirkland_Main-1939	Kirkland_Manholes-779	276.61	Kirkland_Manholes-486	260.65	97.8	16.33	8	PVC	0.01	2,849	2	4	6	0.2		
Kirkland_Main-1940	Kirkland_Manholes-486	260.65	Kirkland_Manholes-487	257.38	130.2	2.51	8	PVC	0.01	1,117	19	73	92	8.2		
Kirkland_Main-1942	Kirkland_Manholes-487	257.38	Kirkland_Manholes-783	251.91	251.1	2.18	8	PVC	0.01	1,041	20	77	97	9.3		
Kirkland_Main-1943	Kirkland_Manholes-781	270.16	Kirkland_Manholes-782	245.67	162	15.11	8	PVC	0.01	2,741	3	9	12	0.4		
Kirkland_Main-1944	Kirkland_Manholes-780	304.33	Kirkland_Manholes-781	270.16	338	10.11	8	PVC	0.01	2,242	3	4	7	0.3		
Kirkland_Main-1945	Kirkland_Manholes-782	245.67	Kirkland_Manholes-785	203.06	217.1	19.63	8	PVC	0.01	3,124	30	112	141	4.5		
Kirkland_Main-1946	Kirkland_Manholes-785	203.06	Kirkland_Manholes-784	186.93	82.2	19.62	8	PVC	0.01	3,123	31	116	147	4.7		
Kirkland_Main-1947	Kirkland_Manholes-784	186.93	Kirkland_Manholes-786	173.41	68.9	19.64	8	PVC	0.01	3,124	87	283	371	11.9		
Kirkland_Main-1948	Kirkland_Manholes-789	234.78	Kirkland_Manholes-788	234.04	150	0.49	8	PVC	0.01	495	1	4	5	1.1		
Kirkland_Main-1949	Kirkland_Manholes-788	234.04	Kirkland_Manholes-787	233.49	110.1	0.5	8	PVC	0.01	498	2	9	10	2.1		
Kirkland_Main-1950	Kirkland_Manholes-787	233.49	Kirkland_Manholes-790	227.7	106.2	5.45	8	PVC	0.01	1,646	3	13	16	1		
Kirkland_Main-1951	Kirkland_Manholes-485	265.21	Kirkland_Manholes-486	260.65	233.3	1.95	8	PVC	0.01	986	17	64	81	8.2		
Kirkland_Main-1952	Kirkland_Manholes-490	279.75	Kirkland_Manholes-485	265.21	234	6.21	8	PVC	0.01	1,758	15	60	75	4.3		
Kirkland_Main-1953	Kirkland_Manholes-482	293.97	Kirkland_Manholes-490	279.75	98.3	14.47	8	PVC	0.01	2,682	14	56	70	2.6		
Kirkland_Main-1954	Kirkland_Manholes-791	327.42	Kirkland_Manholes-491	317.17	287.1	3.57	8	PVC	0.01	1,332	2	4	6	0.5	SM14-Ex-EX47	
Kirkland_Main-1955	Kirkland_Manholes-796	329.52	Kirkland_Manholes-479	328.09	60.4	2.37	8	PVC	0.01	1,085	7	26	32	3		
Kirkland_Main-1956	Kirkland_Manholes-802	309.62	Kirkland_Manholes-801	301.38	220.6	3.74	8	PVC	0.01	1,363	2	4	6	0.5		
Kirkland_Main-1957	Kirkland_Manholes-801	301.38	Kirkland_Manholes-800	299.84	122.4	1.26	8	PVC	0.01	791	4	9	13	1.6		
Kirkland_Main-1958	Kirkland_Manholes-800	299.84	Kirkland_Manholes-799	299.17	200.4	0.33	8	PVC	0.01	408	6	13	18	4.5		
Kirkland_Main-1960	Kirkland_Manholes-797	330.09	Kirkland_Manholes-798	328.4	134	1.26	8	PVC	0.01	792	1	4	6	0.7		
Kirkland_Main-1961	Kirkland_Manholes-798	328.4	Kirkland_Manholes-799	299.17	250.4	11.67	8	PVC	0.01	2,409	3	9	12	0.5		
Kirkland_Main-1962	Kirkland_Manholes-799	299.17	Kirkland_Manholes-803	278.64	308	6.67	8	PVC	0.01	1,820	10	26	36	2		
Kirkland_Main-1963	Kirkland_Manholes-805	300.26	Kirkland_Manholes-806	295.73	104.4	4.34	8	PVC	0.01	1,468	9	26	35	2.4		
Kirkland_Main-1964	Kirkland_Manholes-806	295.73	Kirkland_Manholes-804	284.1	194.3	5.99	8	PVC	0.01	1,725	10	30	40	2.3		
Kirkland_Main-1965	Kirkland_Manholes-807	300.8	Kirkland_Manholes-805	300.26	78.9	0.68	8	PVC	0.01	583	8	21	30	5.1		
Kirkland_Main-1966	Kirkland_Manholes-819	270.84	Kirkland_Manholes-818	259.9	158.1	6.92	8	PVC	0.01	1,854	1	4	6	0.3		
Kirkland_Main-1967	Kirkland_Manholes-818	259.9	Kirkland_Manholes-816	252.1	223.2	3.49	8	PVC	0.01	1,318	4	9	12	0.9		
Kirkland_Main-1968	Kirkland_Manholes-816	252.1	Kirkland_Manholes-815	248.52	125.8	2.85	8	PVC	0.01	1,190	5	13	18	1.5		
Kirkland_Main-1969	Kirkland_Manholes-817	249.75	Kirkland_Manholes-815	248.52	170.1	0.72	8	PVC	0.01	600	2	4	7	1.1		
Kirkland_Main-1970	Kirkland_Manholes-814	224.81	Kirkland_Manholes-813	224.1	119.5	0.59	8	PVC	0.01	543	45	137	183	33.6		
Kirkland_Main-1971	Kirkland_Manholes-813	224.1	Kirkland_Manholes-811	220.71	283.2	1.2	8	PVC	0.01	771	48	142	189	24.5		
Kirkland_Main-1972	Kirkland_Manholes-810	231.27	Kirkland_Manholes-811	220.71	86.4	12.23	8	PVC	0.01	2,465	6	13	18	0.7		
Kirkland_Main-1973	Kirkland_Manholes-811	220.71	Kirkland_Manholes-812	219.12	123.9	1.28	8	PVC	0.01	799	54	159	213	26.7		
Kirkland_Main-1974	Kirkland_Manholes-809	238.49	Kirkland_Manholes-810	231.27	197.7	3.65	8	PVC	0.01	1,347	4	9	13	0.9		
Kirkland_Main-1975	Kirkland_Manholes-808	239.21	Kirkland_Manholes-809	238.5	177.5	0.4	8	PVC	0.01	446	2	4	7	1.5		Drop Connection
Kirkland_Main-1976	Kirkland_Manholes-812	219.12	Kirkland_Manholes-784	186.93	281.2	11.45	8	PVC	0.01	2,385	56	163	219	9.2		
Kirkland_Main-1977	Kirkland_Manholes-822	337.49	Kirkland_Manholes-823	321.62	170.9	9.29	8	PVC	0.01	2,149	2	4	6	0.3	SM14-Ex-EX69	
Kirkland_Main-1978	Kirkland_Manholes-823	321.62	Kirkland_Manholes-824	311.58	159.2	6.3	8	PVC	0.01	1,770	3	9	11	0.6	SM14-Ex-EX69	
Kirkland_Main-1979	Kirkland_Manholes-824	311.58	Kirkland_Manholes-825	285.55	131.7	19.76	8	PVC	0.01	3,134	3	13	16	0.5	SM14-Ex-EX69	
Kirkland_Main-1980	Kirkland_Manholes-825	285.55	Kirkland_Manholes-826	282.55	56.8	5.29	8	PVC	0.01	1,621	5	26	31	1.9	SM14-Ex-EX69	
Kirkland_Main-1981	Kirkland_Manholes-827	295.62	Kirkland_Manholes-828	285.89	94.5	10.29	8	PVC	0.01	2,262	1	4	5	0.2	SM14-Ex-EX69	
Kirkland_Main-1982	Kirkland_Manholes-826	282.55	Kirkland_Manholes-456	263.04	178.8	10.91	8	PVC	0.01	2,329	6	30	36	1.5	SM14-Ex-EX69	
Kirkland_Main-1983	Kirkland_Manholes-828	285.89	Kirkland_Manholes-825	285.55	69	0.49	8	PVC	0.01	495	2	9	10	2.1	SM14-Ex-EX69	
Kirkland_Main-1984	Kirkland_Manholes-790	227.7	Kirkland_Manholes-830	198.45	91.3	32.05	8	PVC	0.01	3,991	4	17	21	0.5		Slope verified in as-builts
Kirkland_Main-1985	Kirkland_Manholes-830	198.45	Kirkland_Manholes-831	192.6	15.9	36.68	8	PVC	0.01	4,270	6	26	32	0.7		Slope verified in as-builts
Kirkland_Main-1986	Kirkland_Manholes-831	192.6	Kirkland_Manholes-786	173.41	171.2	11.21	8	PVC	0.01	2,360	7	30	37	1.5	SM14-Ex-EX46	
Kirkland_Main-1987	Kirkland_Manholes-461	269.91	Kirkland_Manholes-460	268.13	121.9	1.46	8	PVC	0.01	852	2	4	6	0.7	SM14-Ex-EX68	
Kirkland_Main-1988	Kirkland_Manholes-460	268.13	Kirkland_Manholes-456	263.04	170.9	2.98	8	PVC	0.01	1,217	3	9	11	0.9	SM14-Ex-EX68	
Kirkland_Main-1989	Kirkland_Manholes-455	250.45	Kirkland_Manholes-457	235.02	148.1	10.42	8	PVC	0.01	2,276	42	120	162	7.1	SM14-Ex-EX67	
Kirkland_Main-1990	Kirkland_Manholes-457	235.02	Kirkland_Manholes-458	212.1	153.1	14.97	8	PVC	0.01	2,728	43	129	172	6.3	SM14-Ex-EX67	
Kirkland_Main-1991	Kirkland_Manholes-459	247.75	Kirkland_Manholes-457	235.02	263.1	4.84	8	PVC	0.01	1,551	1	4	5	0.3	SM14-Ex-EX67	
Kirkland_Main-1992	Kirkland_Manholes-456	263.04	Kirkland_Manholes-455	262.36	18.8	3.61	8	PVC	0.01	1,339	9	43	52	3.9	SM14-Ex-EX68	Drop Connection
Kirkland_Main-1993	Kirkland_Manholes-792	342.6	Kirkland_Manholes-832	339.26	96.2	3.47	8	PVC	0.01	1,314	1	4	6	0.4	SM14-Ex-EX70	
Kirkland_Main-1994	Kirkland_Manholes-793	339.56	Kirkland_Manholes-832	339.26	76	0.4	8	PVC	0.01	446	2	4	7	1.5	SM14-Ex-EX70	

2035 (20-year) with Proposed Improvements - Peak Hour Flow - Pipe Capacity Table

Label	Upstream Node	Upstream Invert Elevation (ft)	Downstream Node	Downstream Invert Elevation (ft)	Length (ft)	Slope (%)	Diameter (in)	Material	Manning's n	Design Capacity (gpm)	Domestic Flow (gpm)	I/I Flow (gpm)	Total Flow (gpm)	Percent Full (%)	CIP No.	Notes
Kirkland_Main-1997	Kirkland_Manholes-988	238.57	Kirkland_Manholes-989	235.68	166.4	1.74	8	PVC	0.01	929	2	4	6	0.7		
Kirkland_Main-1998	Kirkland_Manholes-989	235.68	Kirkland_Manholes-990	231.8	65.1	5.96	8	PVC	0.01	1,721	3	9	12	0.7		
Kirkland_Main-1999	Kirkland_Manholes-990	231.8	Kirkland_Manholes-991	230.6	208.7	0.57	8	PVC	0.01	535	5	13	18	3.4		
Kirkland_Main-2000	Kirkland_Manholes-992	230.9	Kirkland_Manholes-991	230.6	22.8	1.32	8	PVC	0.01	809	1	4	6	0.7		
Kirkland_Main-2001	Kirkland_Manholes-991	230.6	Kirkland_Manholes-993	229.29	112.3	1.17	8	PVC	0.01	762	7	22	29	3.8		
Kirkland_Main-2002	Kirkland_Manholes-993	229.29	Kirkland_Manholes-994	224.8	89	5.04	8	PVC	0.01	1,583	8	27	34	2.2		
Kirkland_Main-2003	Kirkland_Manholes-996	225.97	Kirkland_Manholes-994	224.8	53	2.21	8	PVC	0.01	1,047	0	4	5	0.5		
Kirkland_Main-2004	Kirkland_Manholes-994	224.8	Kirkland_Manholes-995	224.6	50	0.4	8	PVC	0.01	446	8	36	44	9.9		
Kirkland_Main-2005	Kirkland_Manholes-995	224.6	Kirkland_Manholes-997	222.3	221.9	1.04	8	PVC	0.01	718	10	40	50	7		
Kirkland_Main-2006	Kirkland_Manholes-997	222.3	Kirkland_Manholes-998	220.4	187.6	1.01	8	PVC	0.01	710	11	45	55	7.8		
Kirkland_Main-2007	Kirkland_Manholes-998	220.4	Kirkland_Manholes-980	219.4	152.8	0.65	8	PVC	0.01	570	11	49	60	10.5		
Kirkland_Main-2008	Kirkland_Manholes-980	219.4	Kirkland_Manholes-981	218.7	155.5	0.45	8	PVC	0.01	473	31	120	151	32		
Kirkland_Main-2009	Kirkland_Manholes-981	218.7	Kirkland_Manholes-982	217.59	190.8	0.58	8	PVC	0.01	538	43	125	168	31.2		
Kirkland_Main-2010	Kirkland_Manholes-982	217.59	Kirkland_Manholes-983	215.91	138.4	1.21	8	PVC	0.01	777	50	129	179	23		
Kirkland_Main-2011	Kirkland_Manholes-983	215.91	Kirkland_Manholes-984	210.71	282.7	1.84	8	PVC	0.01	956	51	134	185	19.3		
Kirkland_Main-2012	Kirkland_Manholes-984	210.71	Kirkland_Manholes-985	205.92	47.8	10.03	8	PVC	0.01	2,232	54	138	192	8.6		
Kirkland_Main-2013	Kirkland_Manholes-1001	230.61	Kirkland_Manholes-1020	226.4	192.3	2.19	8	PVC	0.01	1,043	43	94	136	13.1		
Kirkland_Main-2014	Kirkland_Manholes-1000	240.25	Kirkland_Manholes-1001	230.61	249.9	3.86	8	PVC	0.01	1,385	41	89	130	9.4		
Kirkland_Main-2015	Kirkland_Manholes-999	246.1	Kirkland_Manholes-1000	240.25	246.4	2.37	8	PVC	0.01	1,086	39	85	123	11.4		
Kirkland_Main-2016	Kirkland_Manholes-972	246.27	Kirkland_Manholes-999	246.1	109.4	0.16	8	PVC	0.01	278	37	80	118	42.4		
Kirkland_Main-2017	Kirkland_Manholes-1002	227.29	Kirkland_Manholes-1003	219.05	401.3	2.05	8	PVC	0.01	1,010	3	4	7	0.7		
Kirkland_Main-2018	Kirkland_Manholes-1003	219.05	Kirkland_Manholes-1004	214.11	181.5	2.72	8	PVC	0.01	1,163	5	9	14	1.2		
Kirkland_Main-2019	Kirkland_Manholes-1006	216.58	Kirkland_Manholes-1007	215.09	213.6	0.7	8	PVC	0.01	589	5	9	14	2.3		
Kirkland_Main-2020	Kirkland_Manholes-1005	223.06	Kirkland_Manholes-1006	216.58	398.8	1.63	8	PVC	0.01	899	2	4	7	0.7		
Kirkland_Main-2023	Kirkland_Manholes-1007	215.09	Kirkland_Manholes-1004	214.11	335.8	0.29	8	PVC	0.01	381	8	13	21	5.5		
Kirkland_Main-2024	Kirkland_Manholes-1012	211.42	Kirkland_Manholes-1013	197.72	100.9	13.58	8	PVC	0.01	2,598	2	4	7	0.3		
Kirkland_Main-2025	Kirkland_Manholes-1013	197.72	Kirkland_Manholes-1014	187.16	124	8.52	8	PVC	0.01	2,057	4	9	12	0.6		
Kirkland_Main-2026	Kirkland_Manholes-1014	187.16	Kirkland_Manholes-1015	186.96	99	0.2	8	PVC	0.01	317	4	13	18	5.6		
Kirkland_Main-2027	Kirkland_Manholes-1015	186.96	Kirkland_Manholes-1016	185.35	120.5	1.34	8	PVC	0.01	815	7	18	25	3		
Kirkland_Main-2028	Kirkland_Manholes-1016	185.35	Kirkland_Manholes-1036	185.26	143	0.06	8	PVC	0.01	174	9	22	31	18.1		
Kirkland_Main-2029	Kirkland_Manholes-1036	185.26	Kirkland_Manholes-1030	184.08	404.9	0.29	10	PVC	0.01	690	10	27	37	5.3		
Kirkland_Main-2030	Kirkland_Manholes-1030	184.08	Kirkland_Manholes-1031	183.18	286.1	0.31	10	PVC	0.01	717	14	31	45	6.3		
Kirkland_Main-2031	Kirkland_Manholes-1034	183.86	Kirkland_Manholes-1031	183.18	169	0.4	8	PVC	0.01	445	3	4	7	1.7		
Kirkland_Main-2032	Kirkland_Manholes-1031	183.18	Kirkland_Manholes-1035	182.7	151.6	0.32	8	PVC	0.01	397	18	40	58	14.7		
Kirkland_Main-2033	Kirkland_Manholes-1032	177.81	Kirkland_Manholes-1033	173.21	285.6	1.61	8	PVC	0.01	895	5	9	13	1.5		
Kirkland_Main-2034	Kirkland_Manholes-1004	214.11	Kirkland_Manholes-1028	212.78	233.9	0.57	8	PVC	0.01	532	13	27	40	7.5		
Kirkland_Main-2035	Kirkland_Manholes-1009	214.27	Kirkland_Manholes-1008	211.28	293.5	1.02	8	PVC	0.01	712	3	4	7	1	SM14-Ex-EX19	
Kirkland_Main-2036	Kirkland_Manholes-1028	212.78	Kirkland_Manholes-1008	211.28	261	0.57	8	PVC	0.01	534	14	31	45	8.4	SM14-Ex-EX19	
Kirkland_Main-2037	Kirkland_Manholes-1008	211.28	Kirkland_Manholes-1029	210.29	108.6	0.91	8	PVC	0.01	673	16	40	57	8.4	SM14-Ex-EX19	
Kirkland_Main-2038	Kirkland_Manholes-1029	210.29	Kirkland_Manholes-1010	207.69	265.5	0.98	8	PVC	0.01	698	17	45	61	8.8	SM14-Ex-EX19	
Kirkland_Main-2039	Kirkland_Manholes-1010	207.69	Kirkland_Manholes-1017	205.5	77.5	2.83	8	PVC	0.01	1,186	17	49	66	5.6	SM14-Ex-EX19	
Kirkland_Main-2040	Kirkland_Manholes-1022	213.66	Kirkland_Manholes-1023	207.88	245.2	2.36	8	PVC	0.01	1,083	52	116	168	15.5	SM14-Ex-EX18	
Kirkland_Main-2041	Kirkland_Manholes-1023	207.88	Kirkland_Manholes-1017	205.5	153	1.56	8	PVC	0.01	879	55	120	175	19.9	SM14-Ex-EX18	
Kirkland_Main-2042	Kirkland_Manholes-1017	205.5	Kirkland_Manholes-1018	179.75	288.9	8.91	8	PVC	0.01	2,105	73	174	247	11.7	SM14-Ex-EX31	
Kirkland_Main-2043	Kirkland_Manholes-1025	183.2	Kirkland_Manholes-1026	149.27	241.9	14.02	8	PVC	0.01	2,640	4	4	8	0.3		
Kirkland_Main-2044	Kirkland_Manholes-1027	150.87	Kirkland_Manholes-1026	149.27	180	0.89	8	PVC	0.01	665	2	4	6	1		
Kirkland_Main-2045	Kirkland_Manholes-1021	230.72	Kirkland_Manholes-1020	230.54	45.4	0.4	8	PVC	0.01	446	4	9	13	2.8	SM14-Ex-EX18	Drop Connection
Kirkland_Main-2046	Kirkland_Manholes-1020	226.4	Kirkland_Manholes-1019	216.75	175.1	5.51	8	PVC	0.01	1,655	48	107	155	9.4	SM14-Ex-EX18	
Kirkland_Main-2047	Kirkland_Manholes-1019	216.75	Kirkland_Manholes-1022	213.66	284.9	1.08	8	PVC	0.01	734	50	112	162	22	SM14-Ex-EX18	
Kirkland_Main-2050	Kirkland_Manholes-1037	180.8	Kirkland_Manholes-1032	177.81	192.3	1.56	8	PVC	0.01	879	3	4	7	0.8		
Kirkland_Main-2051	Kirkland_Manholes-1041	211.62	Kirkland_Manholes-1040	211.16	115.7	0.4	8	PVC	0.01	446	2	4	7	1.5		
Kirkland_Main-2052	Kirkland_Manholes-1040	211.16	Kirkland_Manholes-1039	191.93	181.5	10.59	8	PVC	0.01	2,295	4	9	13	0.5		
Kirkland_Main-2053	Kirkland_Manholes-1039	191.93	Kirkland_Manholes-1038	180.54	235.3	4.84	8	PVC	0.01	1,551	6	13	19	1.2		
Kirkland_Main-2054	Kirkland_Manholes-1038	180.54	Kirkland_Manholes-1042	180.42	296.4	0.04	12	PVC	0.01	413	35	85	120	29.1	SM14-2035-DF6	
Kirkland_Main-2055	Kirkland_Manholes-1045	212.56	Kirkland_Manholes-1044	190.19	362.7	6.17	8	PVC	0.01	1,751	4	4	8	0.5		
Kirkland_Main-2056	Kirkland_Manholes-1044	190.19	Kirkland_Manholes-1043	180.32	106.1	9.3	8	PVC	0.01	2,151	5	9	14	0.7		
Kirkland_Main-2057	Kirkland_Manholes-1042	180.42	Kirkland_Manholes-1043	180.32	14.1	0.71	8	PVC	0.01	594	36	89	125	21.1		
Kirkland_Main-2058	Kirkland_Manholes-1051	183.74	Kirkland_Manholes-1050	181.82	166.3	1.15	8	PVC	0.01	758	89	152	240	31.7		
Kirkland_Main-2059	Kirkland_Manholes-1050	181.82	Kirkland_Manholes-1049	169.63	230.3	5.29	8	PVC	0.01	1,622	97	156	253	15.6		
Kirkland_Main-2060	Kirkland_Manholes-1049	169.63	Kirkland_Manholes-1048	168.86	245.7	0.31	8	PVC	0.01	395	97	161	258	65.4		
Kirkland_Main-2061	Kirkland_Manholes-986	204.38	Kirkland_Manholes-1051	183.74	288.7	7.15	8	PVC	0.01	1,885	87	147	234	12.4		
Kirkland_Main-2062	Kirkland_Manholes-1048	168.86	Kirkland_Manholes-1047	166.5	308.6	0.76	8	PVC	0.01	617	105	165	270	43.7		

2035 (20-year) with Proposed Improvements - Peak Hour Flow - Pipe Capacity Table

Label	Upstream Node	Upstream Invert Elevation (ft)	Downstream Node	Downstream Invert Elevation (ft)	Length (ft)	Slope (%)	Diameter (in)	Material	Manning's n	Design Capacity (gpm)	Domestic Flow (gpm)	I/I Flow (gpm)	Total Flow (gpm)	Percent Full (%)	CIP No.	Notes
Kirkland_Main-2063	Kirkland_Manholes-1047	166.5	Kirkland_Manholes-1046	162.86	368.8	0.99	8	PVC	0.01	700	105	170	274	39.2		
Kirkland_Main-2064	Kirkland_Manholes-1053	228.57	Kirkland_Manholes-1089	214.64	105.1	13.25	8	PVC	0.01	2,566	4	34	38	1.5		
Kirkland_Main-2065	Kirkland_Manholes-1054	235.88	Kirkland_Manholes-1053	228.57	61.2	11.95	8	PVC	0.01	2,437	3	30	33	1.4		
Kirkland_Main-2066	Kirkland_Manholes-1062	265.12	Kirkland_Manholes-1055	254.27	156.2	6.95	8	PVC	0.01	1,858	8	21	30	1.6		
Kirkland_Main-2067	Kirkland_Manholes-1063	275.15	Kirkland_Manholes-1062	265.12	144.2	6.96	8	PVC	0.01	1,860	2	4	6	0.3		
Kirkland_Main-2068	Kirkland_Manholes-1064	278.57	Kirkland_Manholes-1062	265.12	154.9	8.68	8	PVC	0.01	2,078	6	13	19	0.9		
Kirkland_Main-2069	Kirkland_Manholes-1055	254.27	Kirkland_Manholes-1056	242.38	224	5.31	8	PVC	0.01	1,625	9	26	35	2.2		
Kirkland_Main-2070	Kirkland_Manholes-1056	242.38	Kirkland_Manholes-1057	237.15	108.2	4.83	8	PVC	0.01	1,550	11	30	41	2.7		
Kirkland_Main-2071	Kirkland_Manholes-1057	237.15	Kirkland_Manholes-1058	224.96	136.1	8.96	8	PVC	0.01	2,110	16	47	63	3		
Kirkland_Main-2072	Kirkland_Manholes-1059	243.26	Kirkland_Manholes-1057	237.15	201.9	3.03	8	PVC	0.01	1,227	4	13	17	1.4		
Kirkland_Main-2073	Kirkland_Manholes-1061	271.51	Kirkland_Manholes-1060	252.96	148.5	12.49	8	PVC	0.01	2,492	2	4	6	0.2		
Kirkland_Main-2074	Kirkland_Manholes-1060	252.96	Kirkland_Manholes-1059	243.26	83.7	11.58	8	PVC	0.01	2,400	3	9	11	0.5		
Kirkland_Main-2075	Kirkland_Manholes-1103	198.97	Kirkland_Manholes-1101	197.04	31	6.23	18	PVC	0.01	15,303	873	2,237	3,110	20.3		
Kirkland_Main-2076	Kirkland_Manholes-1102	199.75	Kirkland_Manholes-1101	197.04	30.1	8.99	8	PVC	0.01	2,114	6	43	49	2.3		
Kirkland_Main-2077	Kirkland_Manholes-1100	201.72	Kirkland_Manholes-1102	199.75	337.5	0.58	8	PVC	0.01	539	5	39	43	8		
Kirkland_Main-2078	Kirkland_Manholes-1093	203.29	Kirkland_Manholes-1100	201.72	272.4	0.58	8	PVC	0.01	535	3	34	37	7		
Kirkland_Main-2079	Kirkland_Manholes-1095	206.07	Kirkland_Manholes-1094	204.22	102	1.81	8	PVC	0.01	950	1	4	5	0.5		
Kirkland_Main-2080	Kirkland_Manholes-1094	204.22	Kirkland_Manholes-1093	203.29	43.7	2.13	8	PVC	0.01	1,028	1	9	10	0.9		
Kirkland_Main-2081	Kirkland_Manholes-1096	204.27	Kirkland_Manholes-1093	203.29	162.1	0.6	8	PVC	0.01	548	2	21	23	4.2		
Kirkland_Main-2082	Kirkland_Manholes-1098	205.6	Kirkland_Manholes-1097	204.86	78.1	0.95	8	PVC	0.01	686	0	4	5	0.7		
Kirkland_Main-2083	Kirkland_Manholes-1097	204.86	Kirkland_Manholes-1096	204.27	167.5	0.35	8	PVC	0.01	418	1	17	18	4.4		
Kirkland_Main-2084	Kirkland_Manholes-1099	211.44	Kirkland_Manholes-1097	204.86	308.5	2.13	8	PVC	0.01	1,030	1	9	9	0.9		
Kirkland_Main-2085	Kirkland_Manholes-1079	238.18	Kirkland_Manholes-1080	229.14	134.4	6.73	8	PVC	0.01	1,829	1	4	5	0.3		
Kirkland_Main-2086	Kirkland_Manholes-1080	229.14	Kirkland_Manholes-1081	226.1	255.6	1.19	8	PVC	0.01	769	97	279	376	48.9		
Kirkland_Main-2087	Kirkland_Manholes-1082	233.35	Kirkland_Manholes-1081	226.1	142.6	5.08	8	PVC	0.01	1,590	2	4	6	0.4		
Kirkland_Main-2088	Kirkland_Manholes-1081	226.1	Kirkland_Manholes-1070	224.89	260.5	0.46	12	PVC	0.01	1,417	99	288	387	27.3	SM14-2035-DF7	
Kirkland_Main-2089	Kirkland_Manholes-1069	247.48	Kirkland_Manholes-1070	224.89	321.6	7.02	8	PVC	0.01	1,869	93	245	514	27.5		
Kirkland_Main-2090	Kirkland_Manholes-1067	259.57	Kirkland_Manholes-1069	247.48	126	9.6	8	PVC	0.01	2,184	86	228	490	22.4		
Kirkland_Main-2091	Kirkland_Manholes-1071	277.81	Kirkland_Manholes-1067	259.57	242.2	7.53	8	PVC	0.01	1,935	21	64	86	4.4		
Kirkland_Main-2092	Kirkland_Manholes-1072	288.83	Kirkland_Manholes-1071	277.81	139.9	7.88	8	PVC	0.01	1,979	10	21	31	1.6		
Kirkland_Main-2093	Kirkland_Manholes-1077	252.59	Kirkland_Manholes-1069	247.48	346.5	1.47	8	PVC	0.01	856	5	13	18	2.1		
Kirkland_Main-2094	Kirkland_Manholes-1078	305.14	Kirkland_Manholes-1073	302.05	162.4	1.9	8	PVC	0.01	973	4	9	12	1.3		
Kirkland_Main-2095	Kirkland_Manholes-1073	302.05	Kirkland_Manholes-1072	288.83	375.1	3.52	8	PVC	0.01	1,324	8	17	25	1.9		
Kirkland_Main-2096	Kirkland_Manholes-1074	295.05	Kirkland_Manholes-1075	291.84	155.4	2.07	8	PVC	0.01	1,013	59	137	372	36.7		
Kirkland_Main-2097	Kirkland_Manholes-1076	298.68	Kirkland_Manholes-1074	295.05	108.2	3.36	8	PVC	0.01	1,291	58	133	367	28.4		
Kirkland_Main-2098	Kirkland_Manholes-1068	279.38	Kirkland_Manholes-1066	278.91	39.6	1.19	8	PVC	0.01	768	62	150	389	50.6		
Kirkland_Main-2099	Kirkland_Manholes-1066	278.91	Kirkland_Manholes-1065	260.88	143.1	12.6	8	PVC	0.01	2,502	63	155	394	15.7		
Kirkland_Main-2100	Kirkland_Manholes-1065	260.88	Kirkland_Manholes-1067	259.57	130	1.01	8	PVC	0.01	708	64	159	399	56.3		
Kirkland_Main-2101	Kirkland_Manholes-1090	254.86	Kirkland_Manholes-1091	251.69	82.2	3.86	8	PVC	0.01	1,385	2	17	20	1.4		
Kirkland_Main-2102	Kirkland_Manholes-1091	251.69	Kirkland_Manholes-1092	246.51	140.9	3.68	8	PVC	0.01	1,352	3	21	24	1.8		
Kirkland_Main-2103	Kirkland_Manholes-1092	246.51	Kirkland_Manholes-1054	235.88	141.8	7.5	8	PVC	0.01	1,931	3	26	29	1.5		
Kirkland_Main-2104	Kirkland_Manholes-1089	214.64	Kirkland_Manholes-1086	198.2	276	5.96	8	PVC	0.01	1,721	4	39	43	2.5		
Kirkland_Main-2105	Kirkland_Manholes-1088	203.98	Kirkland_Manholes-1087	203.79	103.7	0.19	8	PVC	0.01	306	5	4	10	3.2		
Kirkland_Main-2106	Kirkland_Manholes-1087	203.79	Kirkland_Manholes-1086	198.2	55.1	10.14	8	PVC	0.01	2,245	6	9	14	0.6		
Kirkland_Main-2107	Kirkland_Manholes-1070	224.89	Kirkland_Manholes-1083	220.88	227.5	1.76	12	PVC	0.01	2,760	193	537	906	32.8	SM14-Ex-EX321	
Kirkland_Main-2108	Kirkland_Manholes-2996	220.63	Kirkland_Manholes-1084	206.2	323.5	4.46	8	PVC	0.01	1,489	205	549	930	62.5		
Kirkland_Main-2109	Kirkland_Manholes-1058	224.96	Kirkland_Manholes-1084	206.2	342.8	5.47	8	PVC	0.01	1,649	17	52	69	4.2		
Kirkland_Main-2110	Kirkland_Manholes-1084	206.2	Kirkland_Manholes-1085	204.43	46.9	3.78	8	PVC	0.01	1,370	223	605	1,005	73.3		
Kirkland_Main-2111	Kirkland_Manholes-1101	197.04	Kirkland_Manholes-1104	196.79	207.5	0.12	24	PVC	0.01	4,572	880	2,284	3,163	69.2	SM14-Ex-EX22	
Kirkland_Main-2112	Kirkland_Manholes-1112	179.44	Kirkland_Manholes-1124	177.02	214.1	1.13	15	PVC	0.01	4,007	68	34	103	2.6		
Kirkland_Main-2113	Kirkland_Manholes-1113	180.6	Kirkland_Manholes-1112	179.44	131.8	0.88	15	PVC	0.01	3,535	59	26	84	2.4		
Kirkland_Main-2114	Kirkland_Manholes-1117	196.58	Kirkland_Manholes-1115	186.39	163.3	6.24	15	PVC	0.01	9,416	22	13	35	0.4		
Kirkland_Main-2115	Kirkland_Manholes-1116	180.36	Kirkland_Manholes-1112	179.44	120	0.77	8	PVC	0.01	617	4	4	8	1.3		
Kirkland_Main-2116	Kirkland_Manholes-1119	159.49	Kirkland_Manholes-1120	158.13	217.8	0.62	8	PVC	0.01	557	31	6	37	6.7		
Kirkland_Main-2117	Kirkland_Manholes-1126	164.51	Kirkland_Manholes-1127	163.92	310.2	0.19	24	PVC	0.01	5,757	391	738	1,305	22.7	SM14-Ex-EX4	
Kirkland_Main-2118	Kirkland_Manholes-1134	223.76	Kirkland_Manholes-1131	191.56	280.1	11.49	8	PVC	0.01	2,390	15	24	40	1.7	SM14-Ex-EX63	
Kirkland_Main-2119	Kirkland_Manholes-1137	231.81	Kirkland_Manholes-1135	210.01	166.8	13.07	8	PVC	0.01	2,549	2	4	7	0.3	SM14-Ex-EX81	
Kirkland_Main-2120	Kirkland_Manholes-1135	210.01	Kirkland_Manholes-1131	191.56	334.9	5.51	8	PVC	0.01	1,655	3	13	17	1	SM14-Ex-EX81	
Kirkland_Main-2121	Kirkland_Manholes-1136	213.62	Kirkland_Manholes-1135	210.01	85.6	4.22	8	PVC	0.01	1,448	0	4	5	0.3	SM14-Ex-EX81	
Kirkland_Main-2122	Kirkland_Manholes-680	257.67	Kirkland_Manholes-679	257.45	31.1	0.71	8	PVC	0.01	593	24	26	50	8.4		
Kirkland_Main-2123	Kirkland_Manholes-679	257.45	Kirkland_Manholes-681	256.89	146.9	0.38	8	PVC	0.01	435	26	34	60	13.8		
Kirkland_Main-2124	Kirkland_Manholes-678	266.88	Kirkland_Manholes-679	257.45	86.2	10.93	8	PVC	0.01	2,331	1	4	5	0.2		

2035 (20-year) with Proposed Improvements - Peak Hour Flow - Pipe Capacity Table

Label	Upstream Node	Upstream Invert Elevation (ft)	Downstream Node	Downstream Invert Elevation (ft)	Length (ft)	Slope (%)	Diameter (in)	Material	Manning's n	Design Capacity (gpm)	Domestic Flow (gpm)	I/I Flow (gpm)	Total Flow (gpm)	Percent Full (%)	CIP No.	Notes
Kirkland_Main-2125	Kirkland_Manholes-682	258.64	Kirkland_Manholes-680	257.67	223	0.44	8	PVC	0.01	465	3	21	24	5.2		
Kirkland_Main-2126	Kirkland_Manholes-685	255.36	Kirkland_Manholes-1888	254.12	288.3	0.43	8	PVC	0.01	462	28	47	76	16.4		
Kirkland_Main-2127	Kirkland_Manholes-684	256.25	Kirkland_Manholes-685	255.36	200.3	0.44	8	PVC	0.01	469	26	43	69	14.8		
Kirkland_Main-2128	Kirkland_Manholes-1740	35.99	Kirkland_Manholes-1743	28.04	156.8	5.07	10	PVC	0.01	2,878	369	561	931	32.3		
Kirkland_Main-2129	Kirkland_Manholes-1757	18.99	Kirkland_Manholes-1756	15.01	53.7	7.42	8	PVC	0.01	1,920	6	7	12	0.6	SM14-Ex-EX183	
Kirkland_Main-2130	Kirkland_Manholes-1756	15.01	Kirkland_Manholes-1758	14.89	54.1	0.21	12	PVC	0.01	959	65	20	85	8.9	SM14-Ex-EX183	
Kirkland_Main-2131	Kirkland_Manholes-1758	14.89	Kirkland_Manholes-1759	14.76	60.8	0.23	12	PVC	0.01	991	69	26	95	9.6	SM14-Ex-EX183	
Kirkland_Main-2132	Kirkland_Manholes-1759	14.76	Kirkland_Manholes-1789	14.67	38.9	0.21	12	PVC	0.01	957	69	33	102	10.6	SM14-Ex-EX183	
Kirkland_Main-2133	Kirkland_Manholes-2067	19	Kirkland_Manholes-1756	15.01	217.5	1.84	12	PVC	0.01	2,816	52	7	59	2.1	SM14-Ex-EX183	
Kirkland_Main-2134	Kirkland_Manholes-2305	15.26	Kirkland_Manholes-1755	15.12	124.7	0.11	21	PVC	0.01	3,097	352	676	1,028	33.2		
Kirkland_Main-2135	Kirkland_Manholes-1755	15.12	Kirkland_Manholes-1753	14.83	381.1	0.08	21	PVC	0.01	2,550	353	683	1,035	40.6		
Kirkland_Main-2136	Kirkland_Manholes-1753	14.83	Kirkland_Manholes-1754	14.75	34.9	0.23	21	PVC	0.01	4,426	359	689	1,048	23.7		
Kirkland_Main-2137	Kirkland_Manholes-1754	14.75	Kirkland_Manholes-1789	14.67	165.1	0.05	21	PVC	0.01	2,035	366	696	1,062	52.2		
Kirkland_Main-2138	Kirkland_Manholes-1692	35.9	Kirkland_Manholes-736	28.45	107.1	6.96	8	PVC	0.01	1,860	98	272	370	19.9	SM14-Ex-EX96	
Kirkland_Main-2139	Kirkland_Manholes-1694	44.12	Kirkland_Manholes-1692	35.9	116.3	7.07	8	PVC	0.01	1,874	93	256	348	18.6	SM14-Ex-EX96	
Kirkland_Main-2140	Kirkland_Manholes-1701	49.81	Kirkland_Manholes-1694	44.12	274.3	2.07	8	PVC	0.01	1,016	10	17	26	2.6	SM14-Ex-EX152	
Kirkland_Main-2141	Kirkland_Manholes-1702	82.31	Kirkland_Manholes-1701	49.81	296.4	10.96	8	PVC	0.01	2,335	2	8	10	0.4	SM14-Ex-EX152	
Kirkland_Main-2142	Kirkland_Manholes-1698	89.68	Kirkland_Manholes-1697	68.77	247.3	8.45	8	PVC	0.01	2,050	2	8	10	0.5	SM14-Ex-EX151	
Kirkland_Main-2143	Kirkland_Manholes-1697	68.77	Kirkland_Manholes-1696	58.41	181	5.72	8	PVC	0.01	1,687	9	17	26	1.5	SM14-Ex-EX151	
Kirkland_Main-2144	Kirkland_Manholes-614	87.89	Kirkland_Manholes-1696	58.41	277.2	10.64	8	PVC	0.01	2,299	67	198	265	11.5	SM14-Ex-EX96	
Kirkland_Main-2145	Kirkland_Manholes-2025	477	Kirkland_Manholes-2024	470.6	42.9	14.92	8	PVC	0.01	2,724	10	13	23	0.8		
Kirkland_Main-2146	Kirkland_Manholes-2024	470.6	Kirkland_Manholes-2023	466.76	120.1	3.2	8	PVC	0.01	1,261	11	17	28	2.2		
Kirkland_Main-2147	Kirkland_Manholes-2019	467.83	Kirkland_Manholes-2022	466	273.9	0.67	10	PVC	0.01	1,045	161	266	427	40.9		
Kirkland_Main-2148	Kirkland_Manholes-2028	481.27	Kirkland_Manholes-2026	474.59	90.6	7.37	8	PVC	0.01	1,914	2	4	6	0.3		
Kirkland_Main-2149	Kirkland_Manholes-2029	479.06	Kirkland_Manholes-2027	477.1	283.3	0.69	8	PVC	0.01	586	35	82	117	19.9		
Kirkland_Main-2150	Kirkland_Manholes-2027	477.1	Kirkland_Manholes-2026	474.59	76.4	3.29	8	PVC	0.01	1,278	37	86	123	9.6		
Kirkland_Main-2151	Kirkland_Manholes-2026	474.59	Kirkland_Manholes-2021	473.17	135.7	1.05	8	PVC	0.01	721	39	94	134	18.6		
Kirkland_Main-2152	Kirkland_Manholes-2033	462.47	Kirkland_Manholes-2034	462.21	16.1	1.61	8	PVC	0.01	896	1	4	6	0.6		
Kirkland_Main-2153	Kirkland_Manholes-2034	462.21	Kirkland_Manholes-2032	461.07	176.2	0.65	8	PVC	0.01	567	2	9	11	1.9		Drop Connection
Kirkland_Main-2154	Kirkland_Manholes-2031	464.09	Kirkland_Manholes-2032	458.97	79	6.48	8	PVC	0.01	1,795	178	305	483	26.9	SM14-Ex-EX264	
Kirkland_Main-2155	Kirkland_Manholes-2030	465.11	Kirkland_Manholes-2031	464.09	197.9	0.52	10	PVC	0.01	918	177	300	478	52		
Kirkland_Main-2156	Kirkland_Manholes-2022	466	Kirkland_Manholes-2030	465.11	389.3	0.23	10	PVC	0.01	611	174	292	466	76.2		
Kirkland_Main-2157	Kirkland_Manholes-2035	454.4	Kirkland_Manholes-2036	452.58	173.2	1.05	8	PVC	0.01	723	183	322	505	69.9	SM14-Ex-EX264	
Kirkland_Main-2158	Kirkland_Manholes-2032	458.97	Kirkland_Manholes-2035	454.4	196.5	2.33	8	PVC	0.01	1,075	182	318	499	46.5	SM14-Ex-EX264	
Kirkland_Main-2159	Kirkland_Manholes-2039	480.14	Kirkland_Manholes-2040	475.69	137	3.25	8	PVC	0.01	1,271	7	9	15	1.2	SM14-Ex-EX266	
Kirkland_Main-2160	Kirkland_Manholes-2038	484.4	Kirkland_Manholes-2039	480.14	188.8	2.26	8	PVC	0.01	1,059	2	4	6	0.6	SM14-Ex-EX266	
Kirkland_Main-2161	Kirkland_Manholes-2040	475.69	Kirkland_Manholes-2037	465.67	362.6	2.76	8	PVC	0.01	1,172	9	13	22	1.9	SM14-Ex-EX266	
Kirkland_Main-2162	Kirkland_Manholes-2672	373.35	Kirkland_Manholes-2674	354.77	247.9	7.5	8	PVC	0.01	1,930	26	86	112	5.8	SM14-Ex-EX209	
Kirkland_Main-2163	Kirkland_Manholes-2671	399.75	Kirkland_Manholes-2672	373.35	240.8	10.97	8	PVC	0.01	2,335	25	82	107	4.6	SM14-Ex-EX209	
Kirkland_Main-2164	Kirkland_Manholes-2674	354.77	Kirkland_Manholes-2300	337.19	208.1	8.45	8	PVC	0.01	2,049	28	90	118	5.7	SM14-Ex-EX209	
Kirkland_Main-2165	Kirkland_Manholes-2678	335.2	Kirkland_Manholes-2681	334.86	198.8	0.17	12	PVC	0.01	860	61	180	241	28	SM14-Ex-EX206	
Kirkland_Main-2166	Kirkland_Manholes-2680	361.93	Kirkland_Manholes-2678	335.2	358.9	7.45	8	PVC	0.01	1,924	4	4	8	0.4		
Kirkland_Main-2167	Kirkland_Manholes-2677	336.2	Kirkland_Manholes-2678	335.2	208.7	0.48	12	PVC	0.01	1,439	56	172	228	15.8	SM14-Ex-EX206	
Kirkland_Main-2168	Kirkland_Manholes-2676	336.73	Kirkland_Manholes-2677	336.2	133.1	0.4	12	PVC	0.01	1,317	56	167	223	17	SM14-Ex-EX206	
Kirkland_Main-2169	Kirkland_Manholes-2675	350.82	Kirkland_Manholes-2676	336.73	223.6	6.3	8	PVC	0.01	1,770	4	9	13	0.7	SM14-Ex-EX208	
Kirkland_Main-2170	Kirkland_Manholes-2300	337.19	Kirkland_Manholes-2676	336.73	113.6	0.4	12	PVC	0.01	1,317	50	155	205	15.6	SM14-Ex-EX206	
Kirkland_Main-2171	Kirkland_Manholes-2697	234.26	Kirkland_Manholes-2245	234.09	42.8	0.4	8	PVC	0.01	444	2	4	6	1.5		
Kirkland_Main-2173	Kirkland_Manholes-2682	228.77	Kirkland_Manholes-2685	228.01	128.4	0.59	8	PVC	0.01	542	6	13	19	3.5	SM14-Ex-EX201	
Kirkland_Main-2174	Kirkland_Manholes-2683	239.58	Kirkland_Manholes-2682	228.77	368.9	2.93	8	PVC	0.01	1,207	4	9	12	1		
Kirkland_Main-2175	Kirkland_Manholes-2684	244.68	Kirkland_Manholes-2683	239.58	150.1	3.4	8	PVC	0.01	1,300	1	4	6	0.4		
Kirkland_Main-2176	Kirkland_Manholes-2685	228.01	Kirkland_Manholes-2686	221.84	249.2	2.48	8	PVC	0.01	1,109	7	17	24	2.2	SM14-Ex-EX201	
Kirkland_Main-2177	Kirkland_Manholes-2311	256.52	Kirkland_Manholes-2310	256	129.9	0.4	8	PVC	0.01	446	8	13	21	4.8		
Kirkland_Main-2178	Kirkland_Manholes-2688	231.59	Kirkland_Manholes-2687	227.79	162.1	2.34	8	PVC	0.01	1,080	4	9	13	1.2		
Kirkland_Main-2179	Kirkland_Manholes-2687	227.79	Kirkland_Manholes-2686	221.84	261.7	2.27	8	PVC	0.01	1,063	6	13	18	1.7		
Kirkland_Main-2180	Kirkland_Manholes-2689	235.04	Kirkland_Manholes-2688	231.59	174.6	1.98	8	PVC	0.01	991	2	4	7	0.7		
Kirkland_Main-2184	Kirkland_Manholes-2691	211.09	Kirkland_Manholes-2692	205.03	238.4	2.54	8	PVC	0.01	1,124	16	43	59	5.3	SM14-Ex-EX201	
Kirkland_Main-2185	Kirkland_Manholes-2692	205.03	Kirkland_Manholes-2693	198.67	215	2.96	8	PVC	0.01	1,213	18	47	65	5.3	SM14-Ex-EX201	
Kirkland_Main-2186	Kirkland_Manholes-2693	198.67	Kirkland_Manholes-2694	189.1	61.3	15.61	8	PVC	0.01	2,785	18	52	70	2.5	SM14-Ex-EX201	
Kirkland_Main-2187	Kirkland_Manholes-2695	190.38	Kirkland_Manholes-2694	189.1	280.3	0.46	8	PVC	0.01	476	0	4	5	1	SM14-Ex-EX201	
Kirkland_Main-2188	Kirkland_Manholes-2694	189.1	Kirkland_Manholes-2698	186.34	272.4	1.01	8	PVC	0.01	710	19	60	79	11.2	SM14-Ex-EX198	
Kirkland_Main-2189	Kirkland_Manholes-2701	219.11	Kirkland_Manholes-2700	212.52	304.2	2.17	8	PVC	0.01	1,038	15	60	75	7.2		
Kirkland_Main-2190	Kirkland_Manholes-2700	212.52	Kirkland_Manholes-2699	190.07	286.1	7.85	8	PVC	0.01	1,975	17	64	81	4.1	SM14-Ex-EX202	

2035 (20-year) with Proposed Improvements - Peak Hour Flow - Pipe Capacity Table

Label	Upstream Node	Upstream Invert Elevation (ft)	Downstream Node	Downstream Invert Elevation (ft)	Length (ft)	Slope (%)	Diameter (in)	Material	Manning's n	Design Capacity (gpm)	Domestic Flow (gpm)	I/I Flow (gpm)	Total Flow (gpm)	Percent Full (%)	CIP No.	Notes
Kirkland_Main-2191	Kirkland_Manholes-2699	190.07	Kirkland_Manholes-2696	172.94	342.2	5.01	8	PVC	0.01	1,578	17	69	86	5.5	SM14-Ex-EX202	
Kirkland_Main-2192	Kirkland_Manholes-2706	252.55	Kirkland_Manholes-2704	250.11	196.5	1.24	8	PVC	0.01	786	1	4	5	0.6		
Kirkland_Main-2193	Kirkland_Manholes-2704	250.11	Kirkland_Manholes-2705	234.07	107.2	14.96	8	PVC	0.01	2,727	12	52	63	2.3		
Kirkland_Main-2194	Kirkland_Manholes-2705	234.07	Kirkland_Manholes-2701	219.11	291.8	5.13	8	PVC	0.01	1,596	14	56	70	4.4		
Kirkland_Main-2195	Kirkland_Manholes-2710	293.33	Kirkland_Manholes-2709	292.14	31.4	3.79	8	PVC	0.01	1,373	0	4	5	0.3		
Kirkland_Main-2197	Kirkland_Manholes-501	145.5	Kirkland_Manholes-502	134.98	294	3.58	8	PVC	0.01	1,334	2	8	10	0.8	SM10	
Kirkland_Main-2198	Kirkland_Manholes-502	134.98	Kirkland_Manholes-1158	124.93	261.4	3.85	8	PVC	0.01	1,383	5	17	21	1.5	SM10	
Kirkland_Main-2199	Kirkland_Manholes-1178	142.08	Kirkland_Manholes-1179	123.76	339.2	5.4	8	PVC	0.01	1,639	8	25	33	2	SM10	
Kirkland_Main-2200	Kirkland_Manholes-1177	164.29	Kirkland_Manholes-1178	142.08	352.7	6.3	8	PVC	0.01	1,769	5	17	21	1.2	SM10	
Kirkland_Main-2201	Kirkland_Manholes-1176	174.14	Kirkland_Manholes-1177	164.29	198.1	4.97	8	PVC	0.01	1,572	2	8	10	0.6	SM10	
Kirkland_Main-2202	Kirkland_Manholes-1174	178.7	Kirkland_Manholes-1173	177.85	211.5	0.4	8	PVC	0.01	446	2	8	11	2.4	SM10	Drop Connection
Kirkland_Main-2203	Kirkland_Manholes-1175	174.04	Kirkland_Manholes-1173	166.52	399.1	1.88	8	PVC	0.01	968	3	8	11	1.1	SM10	
Kirkland_Main-2204	Kirkland_Manholes-1173	166.52	Kirkland_Manholes-1172	164.12	183.3	1.31	8	PVC	0.01	807	9	25	34	4.2	SM10	
Kirkland_Main-2205	Kirkland_Manholes-1172	164.12	Kirkland_Manholes-1171	160.49	157.6	2.3	8	PVC	0.01	1,070	11	33	44	4.1	SM14-Ex-EX79	
Kirkland_Main-2206	Kirkland_Manholes-2890	82	Kirkland_Manholes-1162	78.51	88.5	3.95	8	PVC	0.01	1,400	1	8	359	25.7	SM14-Ex-EX77	
Kirkland_Main-2207	Kirkland_Manholes-514	18.19	Kirkland_Manholes-2958	17.19	133.7	0.75	8	PVC	0.01	610	38	212	250	41	SM14-Ex-EX37	
Kirkland_Main-2208	Kirkland_Manholes-493	145.66	Kirkland_Manholes-3107	127.14	403.7	4.59	8	PVC	0.01	1,510	3	8	11	0.7	SM10	
Kirkland_Main-2209	Kirkland_Manholes-496	188.94	Kirkland_Manholes-495	169.48	399.8	4.87	8	PVC	0.01	1,555	2	8	11	0.7	SM10	
Kirkland_Main-2210	Kirkland_Manholes-497	188.11	Kirkland_Manholes-499	185.94	314.9	0.69	8	PVC	0.01	585	22	58	80	13.7	SM10	
Kirkland_Main-2211	Kirkland_Manholes-498	190.16	Kirkland_Manholes-499	185.94	340.1	1.24	8	PVC	0.01	785	4	8	12	1.6	SM10	
Kirkland_Main-2213	Kirkland_Manholes-510	78.8	Kirkland_Manholes-509	76.43	10.6	22.33	15	PVC	0.01	17,810	9	41	50	0.3		
Kirkland_Main-2214	Kirkland_Manholes-513	81.7	Kirkland_Manholes-512	79.85	46	4.02	12	PVC	0.01	4,168	35	157	192	4.6	SM14-Ex-EX76	
Kirkland_Main-2215	Kirkland_Manholes-1825	112.27	Kirkland_Manholes-508	102	349.6	2.94	8	PVC	0.01	1,208	6	17	22	1.8	SM10	
Kirkland_Main-2216	Kirkland_Manholes-508	102	Kirkland_Manholes-507	100.47	381.8	0.4	8	PVC	0.01	446	8	25	33	7.3	SM10	Drop Connection
Kirkland_Main-2217	Kirkland_Manholes-507	85.74	Kirkland_Manholes-506	75.41	39.4	26.19	8	PVC	0.01	3,608	9	33	42	1.2		
Kirkland_Main-2218	Kirkland_Manholes-506	75.41	Kirkland_Manholes-505	74.06	314	0.43	15	PVC	0.01	2,471	149	594	1,093	44.2		
Kirkland_Main-2221	Kirkland_Manholes-505	74.06	Kirkland_Manholes-1824	72.16	261.9	0.73	15	PVC	0.01	3,210	150	603	1,103	34.4		
Kirkland_Main-2222	Kirkland_Manholes-509	76.43	Kirkland_Manholes-506	75.41	337.6	0.3	15	PVC	0.01	2,072	139	553	1,043	50.3		
Kirkland_Main-2224	Kirkland_Manholes-1160	77.11	Kirkland_Manholes-509	76.43	266.4	0.26	15	PVC	0.01	1,904	130	504	984	51.7		
Kirkland_Main-2225	Kirkland_Manholes-511	79.24	Kirkland_Manholes-1161	78.67	198.1	0.29	15	PVC	0.01	2,022	38	173	211	10.4		
Kirkland_Main-2226	Kirkland_Manholes-512	79.85	Kirkland_Manholes-511	79.24	306.1	0.2	15	PVC	0.01	1,683	37	165	202	12		
Kirkland_Main-2228	Kirkland_Manholes-1533	294.07	Kirkland_Manholes-1532	269.21	121	20.55	8	PVC	0.01	3,196	3	13	16	0.5	SM14-Ex-EX126	
Kirkland_Main-2229	Kirkland_Manholes-1532	269.21	Kirkland_Manholes-1531	265.03	88.5	4.72	8	PVC	0.01	1,532	4	17	21	1.4	SM14-Ex-EX126	
Kirkland_Main-2230	Kirkland_Manholes-1211	186.99	Kirkland_Manholes-1197	181.82	133.6	3.87	8		0.012	1,156	6	33	39	3.4		
Kirkland_Main-2231	Kirkland_Manholes-1531	265.03	Kirkland_Manholes-1530	229.92	439.6	7.99	8	PVC	0.01	1,992	13	30	43	2.2	SM14-Ex-EX125	
Kirkland_Main-2232	Kirkland_Manholes-1530	229.92	Kirkland_Manholes-1529	223.45	269.7	2.4	8	PVC	0.01	1,092	46	116	162	14.8	SM14-Ex-EX121	
Kirkland_Main-2233	Kirkland_Manholes-1529	223.45	Kirkland_Manholes-1528	217.87	160.3	3.48	8	PVC	0.01	1,316	49	120	169	12.8	SM14-Ex-EX121	
Kirkland_Main-2235	Kirkland_Manholes-1249	223.25	Kirkland_Manholes-1250	210.15	250.9	5.22	8	PVC	0.01	1,611	25	99	124	7.7	SM14-Ex-EX65	
Kirkland_Main-2236	Kirkland_Manholes-1246	238.47	Kirkland_Manholes-1247	236.99	105.6	1.4	8	PVC	0.01	835	17	58	75	9	SM14-Ex-EX65	
Kirkland_Main-2237	Kirkland_Manholes-1248	254.12	Kirkland_Manholes-1247	236.99	222.2	7.71	8	PVC	0.01	1,958	2	8	10	0.5	SM14-Ex-EX97	
Kirkland_Main-2238	Kirkland_Manholes-1245	243.41	Kirkland_Manholes-1246	238.47	272.7	1.81	8	PVC	0.01	949	15	50	64	6.8	SM14-Ex-EX65	
Kirkland_Main-2239	Kirkland_Manholes-1244	254.14	Kirkland_Manholes-1245	243.41	231.8	4.63	8	PVC	0.01	1,517	2	8	11	0.7	SM14-Ex-EX65	
Kirkland_Main-2240	Kirkland_Manholes-1242	244.28	Kirkland_Manholes-208	241.09	154	2.07	8	PVC	0.01	1,015	3	9	12	1.2	SM14-Ex-EX61	
Kirkland_Main-2241	Kirkland_Manholes-1237	263.8	Kirkland_Manholes-1236	256.67	250.6	2.84	8	PVC	0.01	1,189	1	4	6	0.5	SM14-Ex-EX60	
Kirkland_Main-2242	Kirkland_Manholes-1239	270.66	Kirkland_Manholes-1238	263.26	225.6	3.28	8	PVC	0.01	1,277	4	8	12	1	SM14-Ex-EX95	
Kirkland_Main-2244	Kirkland_Manholes-1234	275.2	Kirkland_Manholes-1233	274.4	31.3	2.55	8	PVC	0.01	1,127	2	8	10	0.9	SM14-Ex-EX96	
Kirkland_Main-2245	Kirkland_Manholes-1233	274.4	Kirkland_Manholes-1232	271.55	317	0.9	8	PVC	0.01	669	8	25	33	4.9	SM14-Ex-EX96	
Kirkland_Main-2246	Kirkland_Manholes-1232	271.55	Kirkland_Manholes-1231	254.08	347.6	5.03	8	PVC	0.01	1,581	11	33	44	2.8	SM14-Ex-EX96	
Kirkland_Main-2247	Kirkland_Manholes-1231	254.08	Kirkland_Manholes-1230	236.32	352.2	5.04	8	PVC	0.01	1,583	16	41	58	3.6	SM14-Ex-EX96	
Kirkland_Main-2248	Kirkland_Manholes-1414	476.69	Kirkland_Manholes-1415	475.19	382.9	0.39	8	PVC	0.01	441	5	21	27	6.1		
Kirkland_Main-2249	Kirkland_Manholes-1416	475.58	Kirkland_Manholes-1415	475.19	141	0.28	8	PVC	0.01	371	7	21	28	7.6		
Kirkland_Main-2250	Kirkland_Manholes-1417	477.64	Kirkland_Manholes-1416	475.58	44.3	4.65	8	PVC	0.01	1,521	5	17	23	1.5		
Kirkland_Main-2251	Kirkland_Manholes-1419	480.31	Kirkland_Manholes-1418	477.42	188.2	1.54	8	PVC	0.01	874	5	13	18	2		
Kirkland_Main-2252	Kirkland_Manholes-1420	487.42	Kirkland_Manholes-1419	480.31	251.4	2.83	8	PVC	0.01	1,186	4	9	12	1		
Kirkland_Main-2253	Kirkland_Manholes-1421	490.08	Kirkland_Manholes-1420	487.42	280.7	0.95	8	PVC	0.01	686	1	4	5	0.7		
Kirkland_Main-2255	Kirkland_Manholes-1422	436.01	Kirkland_Manholes-1423	431.09	115.7	4.25	8	PVC	0.01	1,454	4	4	9	0.6		
Kirkland_Main-2256	Kirkland_Manholes-1423	431.09	Kirkland_Manholes-1424	424.73	75.1	8.47	8	PVC	0.01	2,052	6	9	15	0.7		
Kirkland_Main-2257	Kirkland_Manholes-1424	424.73	Kirkland_Manholes-1425	416.33	120.8	6.95	8	PVC	0.01	1,859	7	13	20	1.1		
Kirkland_Main-2258	Kirkland_Manholes-1425	416.33	Kirkland_Manholes-2514	400.04	156.3	10.42	8	PVC	0.01	2,276	9	17	26	1.2		
Kirkland_Main-2260	Kirkland_Manholes-1426	513.73	Kirkland_Manholes-1427	513.21	150.6	0.34	8	PVC	0.01	413	3	4	7	1.7		
Kirkland_Main-2261	Kirkland_Manholes-2186	104.5	Kirkland_Manholes-2185	103.23	40.6	3.13	8	PVC	0.01	1,248	27	41	68	5.4		
Kirkland_Main-2262	Kirkland_Manholes-2188	116.01	Kirkland_Manholes-2187	114.37	29.7	5.52	8	PVC	0.01	1,657	1	8	9	0.6		

2035 (20-year) with Proposed Improvements - Peak Hour Flow - Pipe Capacity Table

Label	Upstream Node	Upstream Invert Elevation (ft)	Downstream Node	Downstream Invert Elevation (ft)	Length (ft)	Slope (%)	Diameter (in)	Material	Manning's n	Design Capacity (gpm)	Domestic Flow (gpm)	I/I Flow (gpm)	Total Flow (gpm)	Percent Full (%)	CIP No.	Notes
Kirkland_Main-2263	Kirkland_Manholes-2192	135.5	Kirkland_Manholes-2191	134.63	54	1.61	8	PVC	0.01	895	1	8	9	1		
Kirkland_Main-2265	Kirkland_Manholes-2120	156.16	O-33	155.88	68.2	0.41	8	PVC	0.01	452	3	4	7	1.6		
Kirkland_Main-2266	Kirkland_Manholes-2121	179.17	Kirkland_Manholes-2122	169.1	148.2	6.79	8	PVC	0.01	1,838	2	4	6	0.3	SM14-Ex-EX238	
Kirkland_Main-2267	Kirkland_Manholes-2122	169.1	Kirkland_Manholes-2123	164.83	234.6	1.82	8	PVC	0.01	951	3	9	12	1.2	SM14-Ex-EX238	
Kirkland_Main-2268	Kirkland_Manholes-2200	29.87	Kirkland_Manholes-2202	26.91	11.2	26.5	8	PVC	0.01	3,629	56	20	75	2.1		Slope confirmed by as-builts
Kirkland_Main-2270	Kirkland_Manholes-2209	69.6	Kirkland_Manholes-2206	66.42	347.3	0.92	8	PVC	0.01	675	2	8	10	1.5	SM8	
Kirkland_Main-2271	Kirkland_Manholes-2208	66.31	Kirkland_Manholes-2207	65.6	145.2	0.49	8	PVC	0.01	493	1	7	7	1.4	SM14-Ex-EX189	Drop Connection
Kirkland_Main-2272	Kirkland_Manholes-2216	56.6	Kirkland_Manholes-2217	22.48	221.2	15.42	8	PVC	0.01	2,769	6	33	38	1.4		
Kirkland_Main-2273	Kirkland_Manholes-2215	67.8	Kirkland_Manholes-2214	67.15	122.4	0.53	8	PVC	0.01	514	2	7	9	1.7		
Kirkland_Main-2274	Kirkland_Manholes-2214	67.15	Kirkland_Manholes-2213	66.3	36.8	2.31	8	PVC	0.01	1,071	2	13	15	1.4		
Kirkland_Main-2275	Kirkland_Manholes-2213	66.3	Kirkland_Manholes-2216	56.6	199.9	4.85	8	PVC	0.01	1,553	4	26	30	1.9		
Kirkland_Main-2276	Kirkland_Manholes-2212	72.13	Kirkland_Manholes-2213	66.3	100	5.83	8	PVC	0.01	1,702	2	7	8	0.5	SM14-Ex-EX190	
Kirkland_Main-2278	Kirkland_Manholes-2124	217.78	Kirkland_Manholes-2303	195.57	353.2	6.29	12	PVC	0.01	5,212	418	957	1,375	26.4	SM14-Ex-EX248	
Kirkland_Main-2280	Kirkland_Manholes-1463	498.43	Kirkland_Manholes-1464	490.77	337.1	2.27	8	PVC	0.01	1,063	8	17	25	2.3	SM14-Ex-EX271	
Kirkland_Main-2281	Kirkland_Manholes-1465	496.7	Kirkland_Manholes-1464	490.77	350	1.69	8	PVC	0.01	917	9	13	22	2.4	SM14-Ex-EX272	
Kirkland_Main-2282	Kirkland_Manholes-1464	490.77	Kirkland_Manholes-1469	490.09	171.1	0.4	8	PVC	0.01	446	19	34	53	11.9	SM14-Ex-EX271	
Kirkland_Main-2283	Kirkland_Manholes-1466	501.75	Kirkland_Manholes-1465	496.7	399.1	1.27	8	PVC	0.01	793	5	9	14	1.7	SM14-Ex-EX272	
Kirkland_Main-2284	Kirkland_Manholes-1467	507	Kirkland_Manholes-1466	501.75	336.1	1.56	8	PVC	0.01	881	2	4	6	0.7	SM14-Ex-EX272	
Kirkland_Main-2285	Kirkland_Manholes-1470	502.07	Kirkland_Manholes-1475	484.92	351.8	4.88	8	PVC	0.01	1,557	1	4	6	0.4	SM14-Ex-EX268	
Kirkland_Main-2286	Kirkland_Manholes-1471	502.1	Kirkland_Manholes-1472	489.92	152.5	7.99	8	PVC	0.01	1,993	2	4	6	0.3	SM14-Ex-EX267	
Kirkland_Main-2287	Kirkland_Manholes-1472	489.92	Kirkland_Manholes-1473	489.3	149.9	0.41	8	PVC	0.01	453	4	9	12	2.7	SM14-Ex-EX267	
Kirkland_Main-2288	Kirkland_Manholes-1473	489.3	Kirkland_Manholes-1474	483.04	397.5	1.57	8	PVC	0.01	885	6	13	18	2.1	SM14-Ex-EX267	
Kirkland_Main-2289	Kirkland_Manholes-1474	483.04	Kirkland_Manholes-1478	480.02	383.8	0.79	8	PVC	0.01	625	8	17	25	4	SM14-Ex-EX267	
Kirkland_Main-2290	Kirkland_Manholes-1475	484.92	Kirkland_Manholes-1476	483.18	394.8	0.44	8	PVC	0.01	468	3	9	11	2.4	SM14-Ex-EX268	
Kirkland_Main-2291	Kirkland_Manholes-1476	483.18	Kirkland_Manholes-1477	477.36	143.4	4.06	8	PVC	0.01	1,421	4	13	17	1.2	SM14-Ex-EX268	
Kirkland_Main-2292	Kirkland_Manholes-1477	477.36	Kirkland_Manholes-1481	462.54	116.7	12.7	8	PVC	0.01	2,512	5	17	22	0.9	SM14-Ex-EX268	
Kirkland_Main-2293	Kirkland_Manholes-1478	480.02	Kirkland_Manholes-1479	473.98	182.8	3.3	8	PVC	0.01	1,282	10	21	32	2.5	SM14-Ex-EX267	
Kirkland_Main-2294	Kirkland_Manholes-1479	473.98	Kirkland_Manholes-1483	455.88	188.4	9.61	8	PVC	0.01	2,185	11	26	37	1.7	SM14-Ex-EX267	
Kirkland_Main-2295	Kirkland_Manholes-1482	457.77	Kirkland_Manholes-1483	455.88	220.6	0.86	8	PVC	0.01	653	90	262	351	53.9	SM14-Ex-EX214	
Kirkland_Main-2296	Kirkland_Manholes-1483	455.88	Kirkland_Manholes-2042	455.6	242	0.12	12	PVC	0.01	707	102	292	394	55.7	SM14-Ex-EX214	
Kirkland_Main-2297	Kirkland_Manholes-1480	465.84	Kirkland_Manholes-1482	457.77	216.4	3.73	8	PVC	0.01	1,362	83	236	320	23.5	SM14-Ex-EX214	
Kirkland_Main-2298	Kirkland_Manholes-2162	123.07	Kirkland_Manholes-2139	96.6	399.7	6.62	8	PVC	0.01	1,814	6	17	22	1.2	SM14-Ex-EX194	
Kirkland_Main-2299	Kirkland_Manholes-2161	148.95	Kirkland_Manholes-2162	123.07	410.6	6.3	8	PVC	0.01	1,770	2	8	10	0.6	SM14-Ex-EX194	
Kirkland_Main-2300	Kirkland_Manholes-2239	125.2	Kirkland_Manholes-2238	92.13	326.8	10.12	8	PVC	0.01	2,243	3	6	9	0.4	SM14-Ex-EX224	
Kirkland_Main-2301	Kirkland_Manholes-2241	73.4	Kirkland_Manholes-2240	69.07	226.1	1.92	8	PVC	0.01	976	2	7	8	0.9		
Kirkland_Main-2302	Kirkland_Manholes-2159	84.71	Kirkland_Manholes-2240	69.07	248.4	6.3	8	PVC	0.01	1,769	22	65	87	4.9		
Kirkland_Main-2303	Kirkland_Manholes-2243	51.95	Kirkland_Manholes-2244	43.69	203.1	4.07	8	PVC	0.01	1,422	2	7	9	0.6		
Kirkland_Main-2304	Kirkland_Manholes-2240	69.07	Kirkland_Manholes-2244	43.69	271.1	9.36	8	PVC	0.01	2,157	26	78	104	4.8		
Kirkland_Main-2305	Kirkland_Manholes-2244	43.69	Kirkland_Manholes-2155	42.84	213.7	0.4	8	PVC	0.01	446	32	91	123	27.5		Drop Connection
Kirkland_Main-2306	Kirkland_Manholes-2494	170.93	Kirkland_Manholes-2132	159.52	411.9	2.77	8	PVC	0.01	1,173	20	26	46	3.9	SM14-Ex-EX236	
Kirkland_Main-2307	Kirkland_Manholes-2242	36.17	Kirkland_Manholes-2317	17.2	251	7.56	8	PVC	0.01	1,938	2	7	8	0.4	SM14-Ex-EX191	
Kirkland_Main-2308	Kirkland_Manholes-2229	22.53	Kirkland_Manholes-2313	22.37	40.9	0.4	8	PVC	0.01	446	18	39	57	12.7		Drop Connection
Kirkland_Main-2309	Kirkland_Manholes-2228	23.08	Kirkland_Manholes-2314	22.81	66.4	0.4	8	PVC	0.01	446	22	78	100	22.4		Drop Connection
Kirkland_Main-2311	Kirkland_Manholes-2257	348.17	Kirkland_Manholes-2256	329.88	184.1	9.94	8	PVC	0.01	2,222	1	4	6	0.3	SM14-Ex-EX254	
Kirkland_Main-2312	Kirkland_Manholes-2267	393.07	Kirkland_Manholes-2266	392.8	100.8	0.27	8	PVC	0.01	365	4	17	21	5.9		
Kirkland_Main-2313	Kirkland_Manholes-2715	29.78	Kirkland_Manholes-2716	29.3	129	0.37	12	PVC	0.01	1,268	87	19	105	8.3		
Kirkland_Main-2314	Kirkland_Manholes-2716	29.3	Kirkland_Manholes-2717	21.61	141.2	5.45	12	PVC	0.01	4,851	88	25	113	2.3		
Kirkland_Main-2315	Kirkland_Manholes-2717	21.61	Kirkland_Manholes-2718	21.4	363.5	0.06	12	PVC	0.01	500	89	31	120	24		
Kirkland_Main-2316	Kirkland_Manholes-2052	419.8	Kirkland_Manholes-2280	418.85	171.1	0.56	8	PVC	0.01	525	1	4	6	1.1	SM14-Ex-EX262	
Kirkland_Main-2317	Kirkland_Manholes-2280	418.85	Kirkland_Manholes-2279	418	153.8	0.55	8	PVC	0.01	524	3	9	11	2.2	SM14-Ex-EX262	
Kirkland_Main-2318	Kirkland_Manholes-2274	417.36	Kirkland_Manholes-2273	414.69	101.2	2.64	8	PVC	0.01	1,145	2	4	6	0.5		
Kirkland_Main-2319	Kirkland_Manholes-2279	418	Kirkland_Manholes-2268	401.9	291.9	5.52	8	PVC	0.01	1,656	4	13	17	1	SM14-Ex-EX262	
Kirkland_Main-2320	Kirkland_Manholes-2268	401.9	Kirkland_Manholes-2269	398.2	115.6	3.2	8	PVC	0.01	1,262	23	69	92	7.3	SM14-Ex-EX261	
Kirkland_Main-2321	Kirkland_Manholes-2270	403.21	Kirkland_Manholes-2269	398.2	107.6	4.66	8	PVC	0.01	1,521	8	39	46	3.1		
Kirkland_Main-2322	Kirkland_Manholes-2273	414.69	Kirkland_Manholes-2272	410.23	107.4	4.15	8	PVC	0.01	1,437	3	9	11	0.8		
Kirkland_Main-2323	Kirkland_Manholes-2272	410.23	Kirkland_Manholes-2271	405.49	51.3	9.24	8	PVC	0.01	2,143	3	13	16	0.7		
Kirkland_Main-2324	Kirkland_Manholes-2271	405.49	Kirkland_Manholes-2270	403.21	91.2	2.5	8	PVC	0.01	1,115	7	34	42	3.7		
Kirkland_Main-2325	Kirkland_Manholes-2276	410.45	Kirkland_Manholes-2277	408.15	110.4	2.08	8	PVC	0.01	1,017	2	9	11	1.1		
Kirkland_Main-2326	Kirkland_Manholes-2277	408.15	Kirkland_Manholes-2278	406.74	80.9	1.74	8	PVC	0.01	931	3	13	16	1.7		
Kirkland_Main-2327	Kirkland_Manholes-1228	189.87	Kirkland_Manholes-1227	174.57	207.5	7.37	8	PVC	0.01	1,915	31	74	105	5.5	SM14-Ex-EX96	
Kirkland_Main-2329	Kirkland_Manholes-1226	185.47	Kirkland_Manholes-1227	174.57	349.3	3.12	8	PVC	0.01	1,245	3	8	12	0.9	SM14-Ex-EX93	
Kirkland_Main-2333	Kirkland_Manholes-1209	251.94	Kirkland_Manholes-1208	237.71	314.7	4.52	8	PVC	0.01	1,499	13	31	45	3	SM14-Ex-EX90	

2035 (20-year) with Proposed Improvements - Peak Hour Flow - Pipe Capacity Table

Label	Upstream Node	Upstream Invert Elevation (ft)	Downstream Node	Downstream Invert Elevation (ft)	Length (ft)	Slope (%)	Diameter (in)	Material	Manning's n	Design Capacity (gpm)	Domestic Flow (gpm)	I/I Flow (gpm)	Total Flow (gpm)	Percent Full (%)	CIP No.	Notes
Kirkland_Main-2335	Kirkland_Manholes-1210	257.02	Kirkland_Manholes-1209	251.94	317.5	1.6	8	PVC	0.01	892	10	23	33	3.7	SM14-Ex-EX90	
Kirkland_Main-2341	Kirkland_Manholes-1214	261.31	Kirkland_Manholes-1215	243.02	404.6	4.52	8	PVC	0.01	1,499	7	11	18	1.2	SM14-Ex-EX90	
Kirkland_Main-2342	Kirkland_Manholes-1241	267.65	Kirkland_Manholes-1215	243.02	241.5	10.2	8	PVC	0.01	2,252	4	4	8	0.4	SM14-Ex-EX63	
Kirkland_Main-2343	Kirkland_Manholes-1215	243.02	Kirkland_Manholes-1134	223.76	275.3	7	8	PVC	0.01	1,865	12	20	32	1.7	SM14-Ex-EX63	
Kirkland_Main-2344	Kirkland_Manholes-1217	232.97	Kirkland_Manholes-1218	220.85	252.7	4.8	8	PVC	0.01	1,544	2	4	6	0.4	SM14-Ex-EX59	
Kirkland_Main-2345	Kirkland_Manholes-1270	246.8	Kirkland_Manholes-1245	243.41	285.9	1.19	8	PVC	0.01	768	2	8	10	1.3	SM14-Ex-EX64	
Kirkland_Main-2348	Kirkland_Manholes-1276	172.95	Kirkland_Manholes-1279	163.99	169.3	5.29	8	PVC	0.01	1,622	6	17	22	1.4		
Kirkland_Main-2349	Kirkland_Manholes-1569	157.57	Kirkland_Manholes-1293	152.35	333.3	1.57	8	PVC	0.01	882	5	8	14	1.5	SM14-Ex-EX113	
Kirkland_Main-2350	Kirkland_Manholes-1293	152.35	Kirkland_Manholes-1292	148.28	368.4	1.1	8	PVC	0.01	741	10	17	26	3.6	SM14-Ex-EX113	
Kirkland_Main-2351	Kirkland_Manholes-1568	145.18	Kirkland_Manholes-1297	132.74	335	3.71	8	PVC	0.01	1,359	3	8	12	0.9	SM14-Ex-EX114	
Kirkland_Main-2352	Kirkland_Manholes-1297	132.74	Kirkland_Manholes-1296	129.32	308.3	1.11	8	PVC	0.01	743	6	17	22	3	SM14-Ex-EX114	
Kirkland_Main-2353	Kirkland_Manholes-1281	154.69	Kirkland_Manholes-1292	148.28	310.6	2.06	8	PVC	0.01	1,013	72	248	320	31.6	SM14-Ex-EX102	
Kirkland_Main-2354	Kirkland_Manholes-1292	148.28	Kirkland_Manholes-1296	129.32	322	5.89	8	PVC	0.01	1,711	85	272	357	20.9	SM14-Ex-EX102	
Kirkland_Main-2357	Kirkland_Manholes-1266	188.85	Kirkland_Manholes-1264	172.1	141.2	11.87	8	PVC	0.01	2,429	2	8	10	0.4		
Kirkland_Main-2358	Kirkland_Manholes-1264	172.1	Kirkland_Manholes-1265	168.12	70.1	5.67	8	PVC	0.01	1,679	3	17	19	1.1		
Kirkland_Main-2363	Kirkland_Manholes-1273	182.86	Kirkland_Manholes-1274	175.64	151.8	4.76	8	PVC	0.01	1,538	7	25	32	2.1		
Kirkland_Main-2364	Kirkland_Manholes-1252	181.71	Kirkland_Manholes-1277	163.83	245.6	7.28	8	PVC	0.01	1,902	57	190	247	13	SM14-Ex-EX101	
Kirkland_Main-2365	Kirkland_Manholes-1277	163.83	Kirkland_Manholes-1278	160.09	110.9	3.37	8	PVC	0.01	1,295	59	198	257	19.8	SM14-Ex-EX102	
Kirkland_Main-2366	Kirkland_Manholes-1278	160.09	Kirkland_Manholes-1280	156.25	144.5	2.66	8	PVC	0.01	1,149	67	231	298	25.9	SM14-Ex-EX102	
Kirkland_Main-2367	Kirkland_Manholes-1280	156.25	Kirkland_Manholes-1281	154.69	317.7	0.49	8	PVC	0.01	494	70	239	309	62.6	SM14-Ex-EX102	
Kirkland_Main-2369	Kirkland_Manholes-1311	230.66	Kirkland_Manholes-1312	230.27	96.9	0.4	8	PVC	0.01	446	1	4	5	1.1		
Kirkland_Main-2370	Kirkland_Manholes-1313	230.7	Kirkland_Manholes-1312	230.27	76.5	0.56	8	PVC	0.01	528	5	13	18	3.5		
Kirkland_Main-2371	Kirkland_Manholes-1312	230.27	Kirkland_Manholes-1306	225.07	369.5	1.41	8	PVC	0.01	836	6	22	28	3.4		
Kirkland_Main-2372	Kirkland_Manholes-1513	263.11	Kirkland_Manholes-1515	261.7	138	1.02	8	PVC	0.01	713	50	155	204	28.6	SM14-Ex-EX131	
Kirkland_Main-2373	Kirkland_Manholes-1508	264.2	Kirkland_Manholes-1514	263.47	179.7	0.41	8	PVC	0.01	450	46	142	187	41.6	SM14-Ex-EX131	
Kirkland_Main-2374	Kirkland_Manholes-1684	76.22	Kirkland_Manholes-1683	75.33	41.4	2.15	8	PVC	0.01	1,034	4	8	12	1.1		
Kirkland_Main-2375	Kirkland_Manholes-1851	275	Kirkland_Manholes-1316	272.4	254.5	1.02	8	PVC	0.01	713	2	9	11	1.6		
Kirkland_Main-2376	Kirkland_Manholes-1317	271.64	Kirkland_Manholes-924	268.15	334	1.04	12	PVC	0.01	2,125	176	459	635	29.9		
Kirkland_Main-2377	Kirkland_Manholes-2984	277.63	Kirkland_Manholes-1317	271.64	132.6	4.52	10	PVC	0.01	2,717	167	404	571	21		
Kirkland_Main-2378	Kirkland_Manholes-1371	376.15	Kirkland_Manholes-3081	373.55	185	1.41	8	PVC	0.01	836	98	193	291	34.9		
Kirkland_Main-2379	Kirkland_Manholes-1319	372.4	Kirkland_Manholes-1318	358.26	123	11.5	8	PVC	0.01	2,391	102	206	308	12.9		
Kirkland_Main-2380	Kirkland_Manholes-1318	358.26	Kirkland_Manholes-1320	342.61	140.9	11.1	10	PVC	0.01	4,260	102	210	313	7.3		
Kirkland_Main-2381	Kirkland_Manholes-1320	342.61	Kirkland_Manholes-1326	321.42	151.5	13.98	10	PVC	0.01	4,780	139	283	422	8.8		
Kirkland_Main-2382	Kirkland_Manholes-1514	263.47	Kirkland_Manholes-1513	263.11	127.9	0.28	8	PVC	0.01	374	47	146	193	51.6	SM14-Ex-EX131	
Kirkland_Main-2383	Kirkland_Manholes-1507	265.94	Kirkland_Manholes-1508	264.2	288.2	0.6	8	PVC	0.01	547	40	124	165	30.1	SM14-Ex-EX131	
Kirkland_Main-2384	Kirkland_Manholes-1322	342.78	Kirkland_Manholes-1320	342.61	36.2	0.47	8	PVC	0.01	483	35	69	104	21.6		
Kirkland_Main-2385	Kirkland_Manholes-1321	355.4	Kirkland_Manholes-1322	342.78	269.6	4.68	8	PVC	0.01	1,525	34	64	99	6.5		
Kirkland_Main-2386	Kirkland_Manholes-1335	367.98	Kirkland_Manholes-1321	355.4	137.9	9.12	8	PVC	0.01	2,129	32	60	92	4.3		
Kirkland_Main-2387	Kirkland_Manholes-1323	332.91	Kirkland_Manholes-1324	332.34	49.4	1.15	8	PVC	0.01	757	2	4	6	0.8		
Kirkland_Main-2388	Kirkland_Manholes-1324	332.34	Kirkland_Manholes-1325	323.2	121	7.55	8	PVC	0.01	1,938	3	9	11	0.6		
Kirkland_Main-2389	Kirkland_Manholes-1325	323.2	Kirkland_Manholes-1326	321.42	174.1	1.02	8	PVC	0.01	713	4	13	17	2.4		
Kirkland_Main-2390	Kirkland_Manholes-1326	321.42	Kirkland_Manholes-1339	314.87	128.9	5.08	10	PVC	0.01	2,880	146	313	460	16		
Kirkland_Main-2391	Kirkland_Manholes-1337	323.9	Kirkland_Manholes-1326	321.42	30.5	8.12	8	PVC	0.01	2,009	3	13	16	0.8		
Kirkland_Main-2392	Kirkland_Manholes-1327	326.71	Kirkland_Manholes-1337	323.9	27.1	10.37	8	PVC	0.01	2,271	2	9	11	0.5		
Kirkland_Main-2393	Kirkland_Manholes-1328	394.1	Kirkland_Manholes-1329	393.5	241.8	0.25	8	PVC	0.01	351	8	30	38	10.8		
Kirkland_Main-2394	Kirkland_Manholes-1329	393.5	Kirkland_Manholes-1330	392.47	187.9	0.55	8	PVC	0.01	522	10	34	44	8.4		
Kirkland_Main-2395	Kirkland_Manholes-1330	392.47	Kirkland_Manholes-1332	391.73	102.7	0.72	8	PVC	0.01	597	10	39	49	8.2		
Kirkland_Main-2396	Kirkland_Manholes-1332	391.73	Kirkland_Manholes-1333	390.44	145.6	0.89	8	PVC	0.01	664	29	47	76	11.5	SM14-Ex-EX177	Drop Connection
Kirkland_Main-2397	Kirkland_Manholes-1331	393.51	Kirkland_Manholes-1332	391.73	79.5	2.24	8	PVC	0.01	1,054	1	4	5	0.5	SM14-Ex-EX177	
Kirkland_Main-2398	Kirkland_Manholes-1333	387.1	Kirkland_Manholes-1334	373.64	147.7	9.12	8	PVC	0.01	2,129	30	52	82	3.8		
Kirkland_Main-2399	Kirkland_Manholes-1334	373.64	Kirkland_Manholes-1335	367.98	202.7	2.79	8	PVC	0.01	1,178	31	56	87	7.4		
Kirkland_Main-2400	Kirkland_Manholes-1336	341.09	Kirkland_Manholes-1327	326.71	166.6	8.63	8	PVC	0.01	2,071	2	4	6	0.3		
Kirkland_Main-2401	Kirkland_Manholes-1338	316.17	Kirkland_Manholes-1339	314.87	207.4	0.63	8	PVC	0.01	557	2	4	6	1.1		
Kirkland_Main-2402	Kirkland_Manholes-1339	314.87	Kirkland_Manholes-1342	287.41	238.7	11.5	10	PVC	0.01	4,335	149	322	471	10.9		Drop Connection
Kirkland_Main-2403	Kirkland_Manholes-1345	289.73	Kirkland_Manholes-1344	287.44	243.6	0.94	8	PVC	0.01	684	2	4	6	0.9		
Kirkland_Main-2404	Kirkland_Manholes-1344	287.44	Kirkland_Manholes-1343	283.8	35.3	10.32	8	PVC	0.01	2,265	3	9	12	0.5		
Kirkland_Main-2405	Kirkland_Manholes-1343	283.8	Kirkland_Manholes-1342	283.15	24.6	2.63	8	PVC	0.01	1,144	3	13	16	1.4		
Kirkland_Main-2406	Kirkland_Manholes-1340	293.32	Kirkland_Manholes-1342	293.12	51.1	0.4	8	PVC	0.01	446	15	60	75	16.7		Drop Connection
Kirkland_Main-2407	Kirkland_Manholes-1341	299.38	Kirkland_Manholes-1340	293.32	143.1	4.24	8	PVC	0.01	1,451	13	56	69	4.8		
Kirkland_Main-2408	Kirkland_Manholes-1346	416.9	Kirkland_Manholes-1351	414.82	383.4	0.54	8	PVC	0.01	519	1	4	5	0.9	SM14-Ex-EX181	
Kirkland_Main-2409	Kirkland_Manholes-1351	414.82	Kirkland_Manholes-1350	414.2	207.6	0.3	12	PVC	0.01	1,136	92	193	285	25.1	SM14-Ex-EX215	
Kirkland_Main-2410	Kirkland_Manholes-1350	414.2	Kirkland_Manholes-1917	413.2	125.7	0.8	12	PVC	0.01	1,854	95	202	297	16	SM14-Ex-EX215	

2035 (20-year) with Proposed Improvements - Peak Hour Flow - Pipe Capacity Table

Label	Upstream Node	Upstream Invert Elevation (ft)	Downstream Node	Downstream Invert Elevation (ft)	Length (ft)	Slope (%)	Diameter (in)	Material	Manning's n	Design Capacity (gpm)	Domestic Flow (gpm)	I/I Flow (gpm)	Total Flow (gpm)	Percent Full (%)	CIP No.	Notes
Kirkland_Main-2411	Kirkland_Manholes-1373	425.99	Kirkland_Manholes-1350	414.2	373.4	3.16	8	PVC	0.01	1,253	2	4	7	0.5	SM14-Ex-EX217	
Kirkland_Main-2412	Kirkland_Manholes-612	119.17	Kirkland_Manholes-613	104.8	247.7	5.8	8	PVC	0.01	1,698	2	8	10	0.6	SM14-Ex-EX149	
Kirkland_Main-2413	Kirkland_Manholes-613	104.8	Kirkland_Manholes-614	87.89	231.1	7.32	8	PVC	0.01	1,907	5	17	21	1.1	SM14-Ex-EX149	
Kirkland_Main-2414	Kirkland_Manholes-609	139.22	Kirkland_Manholes-1799	133.76	308.5	1.77	8	PVC	0.01	938	3	8	11	1.2	SM14-Ex-EX146	
Kirkland_Main-2417	Kirkland_Manholes-611	126.2	Kirkland_Manholes-610	123.3	146.2	1.98	8	PVC	0.01	993	1	8	10	1	SM14-Ex-EX148	
Kirkland_Main-2418	Kirkland_Manholes-610	123.3	Kirkland_Manholes-1801	112.29	320.9	3.43	8	PVC	0.01	1,306	4	17	21	1.6	SM14-Ex-EX148	
Kirkland_Main-2420	Kirkland_Manholes-585	162.05	Kirkland_Manholes-1797	142.57	517.3	3.77	8	PVC	0.01	1,368	2	8	10	0.8	SM14-Ex-EX144	
Kirkland_Main-2424	Kirkland_Manholes-582	179.11	Kirkland_Manholes-583	174.24	247.1	1.97	8	PVC	0.01	990	2	8	11	1.1	SM14-Ex-EX91	
Kirkland_Main-2425	Kirkland_Manholes-583	174.24	Kirkland_Manholes-1796	160.8	295.1	4.55	8	PVC	0.01	1,505	5	17	21	1.4	SM14-Ex-EX91	
Kirkland_Main-2426	Kirkland_Manholes-586	156.07	Kirkland_Manholes-587	133.23	320.6	7.12	8	PVC	0.01	1,882	2	8	10	0.5	SM14-Ex-EX145	
Kirkland_Main-2427	Kirkland_Manholes-587	133.23	Kirkland_Manholes-588	128.35	150.1	3.25	8	PVC	0.01	1,271	5	17	22	1.7	SM14-Ex-EX145	
Kirkland_Main-2428	Kirkland_Manholes-580	147.12	Kirkland_Manholes-588	128.35	316.6	5.93	8	PVC	0.01	1,717	42	116	157	9.2	SM14-Ex-EX96	
Kirkland_Main-2430	Kirkland_Manholes-581	170.5	Kirkland_Manholes-580	147.12	349.2	6.7	8	PVC	0.01	1,824	3	8	11	0.6	SM14-Ex-EX94	
Kirkland_Main-2431	Kirkland_Manholes-588	128.35	Kirkland_Manholes-606	111.69	288.6	5.77	8	PVC	0.01	1,694	49	140	189	11.1	SM14-Ex-EX96	
Kirkland_Main-2432	Kirkland_Manholes-1506	266.15	Kirkland_Manholes-1507	265.94	137.9	0.15	8	PVC	0.01	275	40	120	160	58.1		
Kirkland_Main-2433	Kirkland_Manholes-605	109.94	Kirkland_Manholes-604	92.41	437.3	4.01	8	PVC	0.01	1,412	8	8	16	1.2	SM14-Ex-EX160	
Kirkland_Main-2434	Kirkland_Manholes-590	118.3	Kirkland_Manholes-591	102.05	327.5	4.96	8	PVC	0.01	1,571	7	17	23	1.5	SM14-Ex-EX158	
Kirkland_Main-2435	Kirkland_Manholes-591	102.05	Kirkland_Manholes-592	96.93	331.1	1.55	8	PVC	0.01	877	11	25	36	4.1	SM14-Ex-EX158	
Kirkland_Main-2436	Kirkland_Manholes-592	96.93	Kirkland_Manholes-602	90.22	292.3	2.3	8	PVC	0.01	1,068	110	372	482	45.1	SM5	
Kirkland_Main-2437	Kirkland_Manholes-597	99.4	Kirkland_Manholes-592	96.93	306.8	0.8	8	PVC	0.01	633	12	41	53	8.4	SM14-Ex-EX158	
Kirkland_Main-2438	Kirkland_Manholes-1612	97.3	Kirkland_Manholes-599	92.8	301.8	1.49	8	PVC	0.01	861	1	8	9	1.1	SM14-Ex-EX160	
Kirkland_Main-2440	Kirkland_Manholes-573	132.21	Kirkland_Manholes-572	113.73	388	4.76	8	PVC	0.01	1,539	5	8	13	0.8	SM14-Ex-EX118	
Kirkland_Main-2441	Kirkland_Manholes-572	113.73	Kirkland_Manholes-596	110.91	307.7	0.92	8	PVC	0.01	675	123	338	461	68.4	SM14-Ex-EX117	
Kirkland_Main-2442	Kirkland_Manholes-595	103.44	Kirkland_Manholes-597	99.4	155.7	2.6	8	PVC	0.01	1,136	9	33	42	3.7	SM14-Ex-EX116	
Kirkland_Main-2443	Kirkland_Manholes-576	111.2	Kirkland_Manholes-593	103.61	155.5	4.88	8	PVC	0.01	1,558	84	289	373	24	SM5	
Kirkland_Main-2444	Kirkland_Manholes-593	103.61	Kirkland_Manholes-592	96.93	157.1	4.25	8	PVC	0.01	1,454	86	297	383	26.4	SM5	
Kirkland_Main-2445	Kirkland_Manholes-577	113.69	Kirkland_Manholes-576	111.2	334.4	0.74	8	PVC	0.01	608	10	25	35	5.7	SM14-Ex-EX112	
Kirkland_Main-2446	Kirkland_Manholes-578	130.09	Kirkland_Manholes-577	113.69	328.9	4.99	8	PVC	0.01	1,574	6	17	22	1.4	SM14-Ex-EX112	
Kirkland_Main-2447	Kirkland_Manholes-2065	431.1	Kirkland_Manholes-2295	415.45	308.4	5.07	8	PVC	0.01	1,588	2	4	6	0.4		
Kirkland_Main-2448	Kirkland_Manholes-579	148.3	Kirkland_Manholes-578	130.09	329.4	5.53	8	PVC	0.01	1,658	3	8	11	0.7	SM14-Ex-EX112	
Kirkland_Main-2449	Kirkland_Manholes-584	159.38	Kirkland_Manholes-580	147.12	165.2	7.42	8	PVC	0.01	1,921	37	99	136	7.1	SM14-Ex-EX96	
Kirkland_Main-2450	Kirkland_Manholes-615	97.62	Kirkland_Manholes-614	87.89	329.8	2.95	8	PVC	0.01	1,211	2	8	10	0.8	SM14-Ex-EX149	
Kirkland_Main-2451	Kirkland_Manholes-604	92.41	Kirkland_Manholes-621	70.36	291.4	7.57	8	PVC	0.01	1,940	13	21	34	1.7	SM14-Ex-EX161	
Kirkland_Main-2452	Kirkland_Manholes-626	276.72	Kirkland_Manholes-627	275.98	244.8	0.3	8	PVC	0.01	388	2	4	6	1.5		
Kirkland_Main-2453	Kirkland_Manholes-628	242.79	Kirkland_Manholes-629	242.12	61.5	1.09	8	PVC	0.01	736	49	150	199	27.1		
Kirkland_Main-2454	Kirkland_Manholes-629	242.12	Kirkland_Manholes-630	239.43	331.8	0.81	8	PVC	0.01	635	51	155	206	32.4		
Kirkland_Main-2455	Kirkland_Manholes-648	244.79	Kirkland_Manholes-628	242.79	365.8	0.55	8	PVC	0.01	521	48	146	194	37.2		
Kirkland_Main-2456	Kirkland_Manholes-631	237.5	Kirkland_Manholes-632	237.32	36.6	0.5	8	PVC	0.01	498	53	163	216	43.4		Updated Per As-Builts (Drop Connection)
Kirkland_Main-2457	Kirkland_Manholes-630	239.43	Kirkland_Manholes-631	237.5	158.9	1.21	8	PVC	0.01	777	52	159	211	27.2		
Kirkland_Main-2458	Kirkland_Manholes-633	234.78	Kirkland_Manholes-634	228.12	123.4	5.4	21	PVC	0.01	21,481	703	1,666	2,368	11		
Kirkland_Main-2459	Kirkland_Manholes-635	248.49	Kirkland_Manholes-634	228.12	181.8	11.21	8	PVC	0.01	2,360	2	4	6	0.3		
Kirkland_Main-2460	Kirkland_Manholes-634	228.12	Kirkland_Manholes-632	228	216.6	0.06	24	PVC	0.01	3,107	705	1,674	2,379	76.6	SM14-Ex-EX75	
Kirkland_Main-2461	Kirkland_Manholes-632	228	Kirkland_Manholes-636	227	153.6	0.65	21	PVC	0.01	7,460	759	1,842	2,600	34.9		
Kirkland_Main-2462	Kirkland_Manholes-636	227	Kirkland_Manholes-335	225.11	273.2	0.69	21	PVC	0.01	7,690	759	1,846	2,605	33.9		
Kirkland_Main-2466	Kirkland_Manholes-640	237.92	Kirkland_Manholes-639	237.89	31.5	0.1	24	PVC	0.01	4,072	411	1,133	1,544	37.9	SM14-2035-DF8	
Kirkland_Main-2467	Kirkland_Manholes-639	237.89	Kirkland_Manholes-638	236.51	242.7	0.57	21	PVC	0.01	6,971	693	1,653	2,346	33.7		
Kirkland_Main-2468	Kirkland_Manholes-647	246.6	Kirkland_Manholes-646	244.32	287.5	0.79	8	PVC	0.01	628	6	4	11	1.7		
Kirkland_Main-2469	Kirkland_Manholes-646	244.32	Kirkland_Manholes-645	243.42	85.6	1.05	8	PVC	0.01	723	7	9	16	2.2		
Kirkland_Main-2470	Kirkland_Manholes-644	249.23	Kirkland_Manholes-643	242.32	131.1	5.27	8	PVC	0.01	1,619	2	4	6	0.4		
Kirkland_Main-2471	Kirkland_Manholes-645	243.42	Kirkland_Manholes-643	242.32	253.7	0.43	18	PVC	0.01	4,035	402	1,112	1,514	37.5		
Kirkland_Main-2472	Kirkland_Manholes-643	242.32	Kirkland_Manholes-642	242.1	113.5	0.19	18	PVC	0.01	2,698	406	1,120	1,526	56.6		
Kirkland_Main-2473	Kirkland_Manholes-642	242.1	Kirkland_Manholes-641	241.26	301.1	0.28	18	PVC	0.01	3,237	408	1,125	1,533	47.4		
Kirkland_Main-2474	Kirkland_Manholes-641	241.26	Kirkland_Manholes-640	237.92	280	1.19	18	PVC	0.01	6,693	410	1,129	1,539	23		
Kirkland_Main-2475	Kirkland_Manholes-650	246.28	Kirkland_Manholes-649	244.91	253.4	0.54	8	PVC	0.01	518	38	112	150	28.9		
Kirkland_Main-2476	Kirkland_Manholes-661	245.17	Kirkland_Manholes-648	244.79	204.2	0.19	8	PVC	0.01	304	7	26	32	10.6		
Kirkland_Main-2477	Kirkland_Manholes-649	244.91	Kirkland_Manholes-648	244.79	14.5	0.83	8	PVC	0.01	641	41	116	156	24.4		
Kirkland_Main-2478	Kirkland_Manholes-681	256.89	Kirkland_Manholes-684	256.25	143.5	0.45	8	PVC	0.01	473	26	39	65	13.7		
Kirkland_Main-2479	Kirkland_Manholes-683	268.99	Kirkland_Manholes-682	258.64	128.7	8.04	8	PVC	0.01	1,999	0	4	5	0.2		
Kirkland_Main-2480	Kirkland_Manholes-689	265.38	Kirkland_Manholes-688	264.8	145.1	0.4	8	PVC	0.01	445	1	4	5	1.2		
Kirkland_Main-2481	Kirkland_Manholes-688	264.8	Kirkland_Manholes-687	264	200.3	0.4	8	PVC	0.01	446	3	9	11	2.6		
Kirkland_Main-2482	Kirkland_Manholes-695	344.34	Kirkland_Manholes-696	340.09	297.3	1.43	8	PVC	0.01	843	6	9	14	1.7	SM14-Ex-EX74	
Kirkland_Main-2483	Kirkland_Manholes-829	344.99	Kirkland_Manholes-695	344.34	301.8	0.22	8	PVC	0.01	327	2	4	7	2	SM14-Ex-EX74	

2035 (20-year) with Proposed Improvements - Peak Hour Flow - Pipe Capacity Table

Label	Upstream Node	Upstream Invert Elevation (ft)	Downstream Node	Downstream Invert Elevation (ft)	Length (ft)	Slope (%)	Diameter (in)	Material	Manning's n	Design Capacity (gpm)	Domestic Flow (gpm)	I/I Flow (gpm)	Total Flow (gpm)	Percent Full (%)	CIP No.	Notes
Kirkland_Main-2484	Kirkland_Manholes-694	328.94	Kirkland_Manholes-693	302.3	232.9	11.44	8	PVC	0.01	2,384	2	4	6	0.3		
Kirkland_Main-2485	Kirkland_Manholes-691	306.23	Kirkland_Manholes-693	302.3	272.1	1.44	8	PVC	0.01	847	4	9	12	1.5		
Kirkland_Main-2486	Kirkland_Manholes-692	325.47	Kirkland_Manholes-691	306.23	258.4	7.45	8	PVC	0.01	1,924	2	4	6	0.3		
Kirkland_Main-2487	Kirkland_Manholes-693	302.3	Kirkland_Manholes-807	300.8	136	1.1	8	PVC	0.01	741	8	17	25	3.4		
Kirkland_Main-2488	Kirkland_Manholes-690	274.25	Kirkland_Manholes-701	273.2	290.3	0.36	8	PVC	0.01	424	5	13	18	4.3		
Kirkland_Main-2489	Kirkland_Manholes-699	288.54	Kirkland_Manholes-701	273.2	288.8	5.31	8	PVC	0.01	1,625	4	9	13	0.8		
Kirkland_Main-2490	Kirkland_Manholes-698	313.56	Kirkland_Manholes-699	288.54	182.5	13.71	8	PVC	0.01	2,611	2	4	6	0.2		
Kirkland_Main-2492	Kirkland_Manholes-697	318.15	Kirkland_Manholes-700	302.48	274.3	5.71	8	PVC	0.01	1,685	2	4	6	0.3		
Kirkland_Main-2493	Kirkland_Manholes-700	302.48	Kirkland_Manholes-690	274.25	242.5	11.64	8	PVC	0.01	2,405	4	9	13	0.5		
Kirkland_Main-2494	Kirkland_Manholes-703	275.12	Kirkland_Manholes-704	272.37	210.2	1.31	8	PVC	0.01	806	2	4	6	0.8		
Kirkland_Main-2495	Kirkland_Manholes-702	273	Kirkland_Manholes-704	272.37	144.8	0.44	8	PVC	0.01	465	13	30	43	9.2		
Kirkland_Main-2496	Kirkland_Manholes-701	273.2	Kirkland_Manholes-702	273	143.3	0.14	8	PVC	0.01	263	11	26	37	14		
Kirkland_Main-2497	Kirkland_Manholes-723	131.03	O-42	125.22	186.8	3.11	12	PVC	0.01	3,666	356	132	489	13.3	SM14-2021-DF2	
Kirkland_Main-2498	Kirkland_Manholes-722	137.76	Kirkland_Manholes-723	131.03	91.1	7.39	12	PVC	0.01	5,651	353	126	479	8.5	SM14-2021-DF2	
Kirkland_Main-2499	Kirkland_Manholes-721	142.27	Kirkland_Manholes-722	137.76	93.1	4.84	12	PVC	0.01	4,574	348	120	468	10.2	SM14-2021-DF2	
Kirkland_Main-2500	Kirkland_Manholes-720	147.09	Kirkland_Manholes-721	142.27	318.3	1.51	12	PVC	0.01	2,558	346	113	459	17.9	SM14-2021-DF2	
Kirkland_Main-2501	Kirkland_Manholes-719	148.45	Kirkland_Manholes-720	147.09	142.4	0.95	12	PVC	0.01	2,031	343	107	450	22.2	SM14-2021-DF2	
Kirkland_Main-2502	Kirkland_Manholes-717	151.36	Kirkland_Manholes-718	150.12	225.4	0.55	12	PVC	0.01	1,542	330	82	412	26.7	SM14-2035-DF5	
Kirkland_Main-2503	Kirkland_Manholes-716	152.58	Kirkland_Manholes-717	151.36	272.7	0.45	12	PVC	0.01	1,390	327	76	403	29	SM14-2035-DF5	
Kirkland_Main-2504	Kirkland_Manholes-725	154.45	Kirkland_Manholes-716	152.58	174.3	1.07	8	PVC	0.01	730	309	50	359	49.2		
Kirkland_Main-2505	Kirkland_Manholes-726	155.56	Kirkland_Manholes-725	154.45	157.9	0.7	8	PVC	0.01	591	306	44	351	59.3		
Kirkland_Main-2506	Kirkland_Manholes-713	156.49	Kirkland_Manholes-726	155.56	219	0.43	8	PVC	0.01	460	287	38	325	70.6		
Kirkland_Main-2507	Kirkland_Manholes-712	157.06	Kirkland_Manholes-713	156.49	30.1	1.89	8	PVC	0.01	971	285	32	316	32.6		
Kirkland_Main-2508	Kirkland_Manholes-714	170.75	Kirkland_Manholes-712	157.06	209.3	6.54	8	PVC	0.01	1,803	246	13	259	14.4		
Kirkland_Main-2509	Kirkland_Manholes-715	181.7	Kirkland_Manholes-714	170.75	155	7.07	8	PVC	0.01	1,874	3	6	9	0.5		
Kirkland_Main-2510	Kirkland_Manholes-1398	27.8	Kirkland_Manholes-1397	27.53	119.5	0.23	30	PVC	0.01	11,376	245	1,015	3,011	26.5	SM14-Ex-EX154	
Kirkland_Main-2511	Kirkland_Manholes-1397	27.53	Kirkland_Manholes-1396	27.46	145.3	0.05	30	PVC	0.01	5,139	246	1,024	3,020	58.8	SM14-Ex-EX154	
Kirkland_Main-2512	Kirkland_Manholes-1399	44.47	Kirkland_Manholes-1398	27.8	324.1	5.14	12	PVC	0.01	4,715	241	1,007	1,598	33.9	SM14-Ex-EX143	
Kirkland_Main-2513	Kirkland_Manholes-1400	61.37	Kirkland_Manholes-1399	44.47	267.9	6.31	12	PVC	0.01	5,221	238	999	1,588	30.4	SM14-Ex-EX143	
Kirkland_Main-2514	Kirkland_Manholes-1401	76.78	Kirkland_Manholes-1400	61.37	289.6	5.32	8		0.012	1,355	62	281	343	25.3		
Kirkland_Main-2515	Kirkland_Manholes-1402	82.36	Kirkland_Manholes-1401	76.78	122	4.57	8		0.012	1,257	59	264	323	25.7		
Kirkland_Main-2516	Kirkland_Manholes-711	219.85	Kirkland_Manholes-710	219.11	65.7	1.13	8	PVC	0.01	748	11	9	19	2.6		
Kirkland_Main-2517	Kirkland_Manholes-710	219.11	Kirkland_Manholes-709	218.2	118.5	0.77	8	PVC	0.01	618	11	13	24	3.9		
Kirkland_Main-2518	Kirkland_Manholes-709	218.2	Kirkland_Manholes-707	216.1	262.1	0.8	8	PVC	0.01	631	11	17	29	4.5		
Kirkland_Main-2519	Kirkland_Manholes-708	217.66	Kirkland_Manholes-707	216.1	74	2.11	8	PVC	0.01	1,024	0	4	5	0.5		
Kirkland_Main-2520	Kirkland_Manholes-707	216.1	Kirkland_Manholes-706	215.57	102.1	0.52	8	PVC	0.01	508	12	26	38	7.4		
Kirkland_Main-2521	Kirkland_Manholes-706	215.57	Kirkland_Manholes-369	208.86	103.2	6.5	8	PVC	0.01	1,798	12	30	42	2.4		
Kirkland_Main-2522	Kirkland_Manholes-1403	89.74	Kirkland_Manholes-1402	82.36	156.6	4.71	8		0.012	1,276	50	239	289	22.7		
Kirkland_Main-2523	Kirkland_Manholes-1805	101.51	Kirkland_Manholes-1403	89.74	269.7	4.36	8		0.012	1,227	47	223	270	22		
Kirkland_Main-2524	Kirkland_Manholes-1404	117.83	Kirkland_Manholes-1805	101.51	279.3	5.84	8		0.012	1,420	15	91	106	7.4		
Kirkland_Main-2525	Kirkland_Manholes-1405	132.7	Kirkland_Manholes-1404	117.83	317.4	4.68	8		0.012	1,272	14	83	97	7.6		
Kirkland_Main-2526	Kirkland_Manholes-1396	27.46	Kirkland_Manholes-1395	27.24	179.5	0.12	30	PVC	0.01	8,435	370	1,352	3,473	41.2	SM14-Ex-EX154	
Kirkland_Main-2527	Kirkland_Manholes-1395	27.24	Kirkland_Manholes-739	26.87	399	0.09	30	PVC	0.01	7,287	372	1,360	3,484	47.8	SM14-Ex-EX154	
Kirkland_Main-2528	Kirkland_Manholes-739	26.87	Kirkland_Manholes-738	25.89	300.8	0.33	24	PVC	0.01	7,534	373	1,369	3,493	46.4		
Kirkland_Main-2532	Kirkland_Manholes-738	25.89	MH 05-714	25.01	257	0.34	24	PVC	0.01	7,724	399	1,418	3,568	46.2		Updated per as-built drawings
Kirkland_Main-2533	Kirkland_Manholes-736	28.45	Kirkland_Manholes-735	25.17	30.7	10.68	8	PVC	0.01	2,304	99	281	379	16.5		
Kirkland_Main-2534	Kirkland_Manholes-735	25.17	MH 05-714	25.01	98.1	0.16	24	PVC	0.01	5,330	1,163	2,056	3,219	60.4		Updated per as-built drawings
Kirkland_Main-2535	Kirkland_Manholes-1705	33.28	Kirkland_Manholes-757	27.8	142.4	3.85	8	PVC	0.01	1,383	20	33	53	3.8		
Kirkland_Main-2536	Kirkland_Manholes-757	27.8	Kirkland_Manholes-738	25.89	24.1	7.91	8	PVC	0.01	1,983	26	41	67	3.4		
Kirkland_Main-2537	Kirkland_Manholes-734	25.7	Kirkland_Manholes-735	25.17	249.9	0.21	24	PVC	0.01	6,079	1,064	1,767	2,830	46.6		
Kirkland_Main-2538	Kirkland_Manholes-732	47.45	Kirkland_Manholes-733	35.72	350.8	3.34	18	PVC	0.01	11,207	657	1,531	2,189	19.5		
Kirkland_Main-2539	Kirkland_Manholes-731	53.54	Kirkland_Manholes-732	47.45	265.7	2.29	18	PVC	0.01	9,278	561	1,523	2,085	22.5		
Kirkland_Main-2540	Kirkland_Manholes-729	64.46	Kirkland_Manholes-730	57.26	336.6	2.14	12	PVC	0.01	3,040	174	495	669	22		
Kirkland_Main-2541	Kirkland_Manholes-730	57.26	Kirkland_Manholes-731	53.54	101.9	3.65	18	PVC	0.01	11,709	425	1,057	1,481	12.7		
Kirkland_Main-2542	Kirkland_Manholes-1436	518.03	Kirkland_Manholes-1430	516.64	170	0.82	8	PVC	0.01	638	3	9	12	1.9		
Kirkland_Main-2543	Kirkland_Manholes-1434	511.6	Kirkland_Manholes-1431	510.8	175	0.46	8	PVC	0.01	477	15	34	50	10.4		
Kirkland_Main-2544	Kirkland_Manholes-1431	510.8	Kirkland_Manholes-1432	510.04	163.2	0.47	8	PVC	0.01	481	16	39	54	11.3		
Kirkland_Main-2545	Kirkland_Manholes-1432	510.04	Kirkland_Manholes-1433	509.55	97.9	0.5	8	PVC	0.01	499	17	43	60	12		
Kirkland_Main-2546	Kirkland_Manholes-1433	509.55	Kirkland_Manholes-1437	508.69	186	0.46	8	PVC	0.01	480	18	47	66	13.7		
Kirkland_Main-2547	Kirkland_Manholes-1435	519.8	Kirkland_Manholes-1436	518.03	159.8	1.11	8	PVC	0.01	742	3	4	7	1		
Kirkland_Main-2548	Kirkland_Manholes-1437	508.69	Kirkland_Manholes-1438	507.49	258.4	0.46	8	PVC	0.01	480	20	52	72	14.9		
Kirkland_Main-2549	Kirkland_Manholes-1438	507.49	Kirkland_Manholes-1444	505.53	236.5	0.83	8	PVC	0.01	642	28	77	105	16.4	SM14-Ex-EX269	

2035 (20-year) with Proposed Improvements - Peak Hour Flow - Pipe Capacity Table

Label	Upstream Node	Upstream Invert Elevation (ft)	Downstream Node	Downstream Invert Elevation (ft)	Length (ft)	Slope (%)	Diameter (in)	Material	Manning's n	Design Capacity (gpm)	Domestic Flow (gpm)	I/I Flow (gpm)	Total Flow (gpm)	Percent Full (%)	CIP No.	Notes
Kirkland_Main-2550	Kirkland_Manholes-1439	508.99	Kirkland_Manholes-1438	507.49	261.3	0.57	8	PVC	0.01	534	7	21	29	5.4	SM14-Ex-EX269	
Kirkland_Main-2551	Kirkland_Manholes-1441	509.69	Kirkland_Manholes-1440	509.16	212.6	0.25	8	PVC	0.01	352	6	13	19	5.4	SM14-Ex-EX269	
Kirkland_Main-2552	Kirkland_Manholes-1440	509.16	Kirkland_Manholes-1439	508.99	378	0.04	8	PVC	0.01	150	7	17	24	15.9	SM14-Ex-EX269	
Kirkland_Main-2554	Kirkland_Manholes-1449	498.19	Kirkland_Manholes-1450	496.32	291.2	0.64	8	PVC	0.01	565	39	137	177	31.3	SM14-Ex-EX269	
Kirkland_Main-2555	Kirkland_Manholes-1450	496.32	Kirkland_Manholes-1451	492.05	400.8	1.07	8	PVC	0.01	728	43	142	184	25.3	SM14-Ex-EX269	
Kirkland_Main-2556	Kirkland_Manholes-1448	502.55	Kirkland_Manholes-1449	498.19	186.7	2.34	8	PVC	0.01	1,078	38	133	171	15.9	SM14-Ex-EX269	
Kirkland_Main-2557	Kirkland_Manholes-1447	503.26	Kirkland_Manholes-1448	502.55	401.7	0.18	8	PVC	0.01	296	36	129	164	55.5	SM14-Ex-EX269	
Kirkland_Main-2558	Kirkland_Manholes-2976	503.85	Kirkland_Manholes-1447	503.26	210.4	0.28	8	PVC	0.01	373	35	124	159	42.6	SM14-Ex-EX269	
Kirkland_Main-2559	Kirkland_Manholes-1444	505.53	Kirkland_Manholes-1446	505.51	95.2	0.02	12	PVC	0.01	301	29	90	119	39.5	SM14-Ex-EX269	
Kirkland_Main-2560	Kirkland_Manholes-1446	505.51	Kirkland_Manholes-1445	504.92	12.7	4.66	8	PVC	0.01	1,523	29	94	124	8.1	SM14-Ex-EX269	
Kirkland_Main-2561	Kirkland_Manholes-1442	510.02	Kirkland_Manholes-1443	506.8	138.1	2.33	8	PVC	0.01	1,077	0	4	5	0.4	SM14-Ex-EX274	
Kirkland_Main-2562	Kirkland_Manholes-1443	506.8	Kirkland_Manholes-1444	505.53	203.3	0.62	8	PVC	0.01	557	1	9	9	1.7	SM14-Ex-EX274	
Kirkland_Main-2563	Kirkland_Manholes-1451	492.05	Kirkland_Manholes-1452	486.6	321.3	1.7	8	PVC	0.01	918	45	146	191	20.8	SM14-Ex-EX269	
Kirkland_Main-2564	Kirkland_Manholes-1452	486.6	Kirkland_Manholes-1459	479.42	322.1	2.23	8	PVC	0.01	1,053	48	150	198	18.8	SM14-Ex-EX269	
Kirkland_Main-2565	Kirkland_Manholes-1453	500.71	Kirkland_Manholes-1454	499.21	284.8	0.53	8	PVC	0.01	512	2	4	6	1.2	SM14-Ex-EX270	
Kirkland_Main-2566	Kirkland_Manholes-1454	499.21	Kirkland_Manholes-1455	496	348.8	0.92	8	PVC	0.01	676	4	9	13	1.9	SM14-Ex-EX270	
Kirkland_Main-2567	Kirkland_Manholes-1455	496	Kirkland_Manholes-1456	494.83	99.7	1.17	8	PVC	0.01	764	6	13	19	2.5	SM14-Ex-EX270	
Kirkland_Main-2568	Kirkland_Manholes-1456	494.83	Kirkland_Manholes-1457	481.56	320	4.15	8	PVC	0.01	1,436	8	17	25	1.7	SM14-Ex-EX270	
Kirkland_Main-2569	Kirkland_Manholes-1461	483.24	Kirkland_Manholes-1457	482.02	293.4	0.42	8	PVC	0.01	455	26	52	77	17	SM14-Ex-EX214	Drop Connection
Kirkland_Main-2570	Kirkland_Manholes-1457	481.56	Kirkland_Manholes-1458	481.15	103.4	0.4	8	PVC	0.01	444	35	73	108	24.3	SM14-Ex-EX214	
Kirkland_Main-2571	Kirkland_Manholes-1458	481.15	Kirkland_Manholes-1459	479.42	259.2	0.67	8	PVC	0.01	576	35	77	113	19.5	SM14-Ex-EX214	
Kirkland_Main-2572	Kirkland_Manholes-1459	479.42	Kirkland_Manholes-1480	465.84	411.8	3.3	8	PVC	0.01	1,280	83	232	315	24.6	SM14-Ex-EX214	
Kirkland_Main-2573	Kirkland_Manholes-1460	490.4	Kirkland_Manholes-1461	483.24	392	1.83	8	PVC	0.01	953	4	4	9	0.9	SM14-Ex-EX214	
Kirkland_Main-2574	Kirkland_Manholes-1469	490.09	Kirkland_Manholes-1461	483.24	144.8	4.73	8	PVC	0.01	1,534	21	39	60	3.9	SM14-Ex-EX271	
Kirkland_Main-2575	Kirkland_Manholes-608	134.68	Kirkland_Manholes-607	127.97	148.5	4.52	8	PVC	0.01	1,499	2	8	10	0.7	SM14-Ex-EX147	
Kirkland_Main-2576	Kirkland_Manholes-607	127.97	Kirkland_Manholes-606	111.69	332.5	4.9	8	PVC	0.01	1,560	5	17	22	1.4	SM14-Ex-EX147	
Kirkland_Main-2578	Kirkland_Manholes-3035	266.43	Kirkland_Manholes-1506	266.15	125.7	0.22	8	PVC	0.01	333	39	116	155	46.6		
Kirkland_Main-2579	Kirkland_Manholes-1504	267.51	Kirkland_Manholes-1505	267	104.1	0.49	8	PVC	0.01	493	31	90	121	24.6		
Kirkland_Main-2580	Kirkland_Manholes-1503	273.94	Kirkland_Manholes-1504	267.51	44	14.62	8	PVC	0.01	2,696	1	9	10	0.4		
Kirkland_Main-2581	Kirkland_Manholes-1502	279.47	Kirkland_Manholes-1503	273.94	90.7	6.09	8	PVC	0.01	1,741	1	4	5	0.3		
Kirkland_Main-2582	Kirkland_Manholes-1501	267.93	Kirkland_Manholes-1504	267.51	165.4	0.25	8	PVC	0.01	355	29	77	106	29.9		
Kirkland_Main-2583	Kirkland_Manholes-2255	245.88	Kirkland_Manholes-2253	239.74	232.2	2.64	8	PVC	0.01	1,146	34	4	38	3.3	SM14-Ex-EX247	
Kirkland_Main-2584	Kirkland_Manholes-1499	268.92	Kirkland_Manholes-1501	267.93	240	0.41	8	PVC	0.01	453	27	73	100	22.1		
Kirkland_Main-2585	Kirkland_Manholes-1500	287.29	Kirkland_Manholes-1498	284.32	146.8	2.02	8	PVC	0.01	1,003	1	4	5	0.5		
Kirkland_Main-2587	Kirkland_Manholes-1498	284.32	Kirkland_Manholes-1499	268.92	127.3	12.1	8	PVC	0.01	2,452	2	9	11	0.4		
Kirkland_Main-2588	Kirkland_Manholes-771	213.99	Kirkland_Manholes-777	184.25	152.4	19.51	8	PVC	0.01	3,115	3	9	12	0.4		
Kirkland_Main-2589	Kirkland_Manholes-777	184.25	KC_Manholes-6	163.9	254	8.01	8	PVC	0.01	1,995	6	13	19	1		
Kirkland_Main-2590	KC_Manholes-5	169.15	KC_Manholes-6	163.9	285.7	1.84	8	PVC	0.01	956	14	47	61	6.4		
Kirkland_Main-2591	KC_Manholes-6	163.9	O-17	159.86	90.8	4.45	8	PVC	0.01	1,487	22	64	86	5.8		
Kirkland_Main-2592	Kirkland_Manholes-766	182.72	Kirkland_Manholes-1555	164.48	325.6	5.6	8	PVC	0.01	1,669	3	9	12	0.7		
Kirkland_Main-2593	Kirkland_Manholes-1555	164.48	O-18	159.86	33.3	13.89	8	PVC	0.01	2,628	5	13	18	0.7		
Kirkland_Main-2594	Kirkland_Manholes-767	210.01	Kirkland_Manholes-766	182.72	125.5	21.75	8	PVC	0.01	3,288	1	4	5	0.2		
Kirkland_Main-2595	Kirkland_Manholes-765	257.59	Kirkland_Manholes-764	244.77	266.3	4.81	8	PVC	0.01	1,547	28	77	105	6.8	SM14-Ex-EX121	
Kirkland_Main-2596	Kirkland_Manholes-764	244.77	Kirkland_Manholes-1530	229.92	292.5	5.08	8	PVC	0.01	1,589	30	82	112	7	SM14-Ex-EX121	
Kirkland_Main-2597	Kirkland_Manholes-770	166.93	Kirkland_Manholes-769	165.1	146.5	1.25	8	PVC	0.01	788	2	9	10	1.3		
Kirkland_Main-2598	Kirkland_Manholes-769	165.1	Kirkland_Manholes-768	159.83	42.8	12.31	8	PVC	0.01	2,474	4	17	22	0.9		
Kirkland_Main-2599	Kirkland_Manholes-768	159.83	O-19	156.57	65.3	5	8	PVC	0.01	1,577	5	21	27	1.7		
Kirkland_Main-2600	Kirkland_Manholes-1600	216.22	Kirkland_Manholes-1599	200.11	155.5	10.36	8	PVC	0.01	2,269	2	4	6	0.3	SM14-Ex-EX170	
Kirkland_Main-2601	Kirkland_Manholes-1614	91.09	Kirkland_Manholes-1613	87.49	157.9	2.28	8	PVC	0.01	1,065	24	116	139	13.1	SM14-Ex-EX167	
Kirkland_Main-2602	Kirkland_Manholes-1616	135.79	Kirkland_Manholes-1615	109.23	291.4	9.11	8	PVC	0.01	2,128	3	8	12	0.6		
Kirkland_Main-2603	Kirkland_Manholes-1617	246.15	Kirkland_Manholes-1630	217.96	377.4	7.47	8	PVC	0.01	1,927	1	4	6	0.3		
Kirkland_Main-2604	Kirkland_Manholes-1618	259.44	Kirkland_Manholes-1619	255.5	286.6	1.37	8	PVC	0.01	827	2	4	6	0.7	SM14-Ex-EX176	
Kirkland_Main-2605	Kirkland_Manholes-1619	255.5	Kirkland_Manholes-1622	253.11	371.5	0.64	8	PVC	0.01	565	4	9	13	2.3	SM14-Ex-EX176	
Kirkland_Main-2607	Kirkland_Manholes-1620	234.07	Kirkland_Manholes-1621	227.94	53.2	11.53	8	PVC	0.01	2,394	3	4	7	0.3		
Kirkland_Main-2608	Kirkland_Manholes-1621	227.94	Kirkland_Manholes-1631	193.59	278.6	12.33	8	PVC	0.01	2,476	4	9	12	0.5		
Kirkland_Main-2609	Kirkland_Manholes-1623	294.92	Kirkland_Manholes-1622	253.11	447.9	9.33	12	PVC	0.01	6,351	344	871	1,215	19.1	SM7	
Kirkland_Main-2610	Kirkland_Manholes-1633	254.8	Kirkland_Manholes-1622	253.11	303.2	0.56	8	PVC	0.01	526	10	17	28	5.2	SM14-Ex-EX204	
Kirkland_Main-2611	Kirkland_Manholes-1626	191.61	Kirkland_Manholes-1624	183.67	177.3	4.48	8	PVC	0.01	1,492	10	26	36	2.4		
Kirkland_Main-2615	Kirkland_Manholes-1829	64.39	Kirkland_Manholes-1830	64.02	316.5	0.12	18	PVC	0.01	2,096	173	702	1,226	58.5	SM14-Ex-EX142	
Kirkland_Main-2616	Kirkland_Manholes-1830	64.02	Kirkland_Manholes-1400	61.37	81.5	3.25	18	PVC	0.01	11,049	174	710	1,235	11.2	SM14-Ex-EX142	
Kirkland_Main-2617	Kirkland_Manholes-1828	65.79	Kirkland_Manholes-1829	64.39	312.6	0.45	18	PVC	0.01	4,102	172	693	1,216	29.6	SM14-2035-DF11	
Kirkland_Main-2618	Kirkland_Manholes-1827	69.3	Kirkland_Manholes-2994	67.86	357.5	0.4	15	PVC	0.01	2,392	165	660	1,176	49.2		

2035 (20-year) with Proposed Improvements - Peak Hour Flow - Pipe Capacity Table

Label	Upstream Node	Upstream Invert Elevation (ft)	Downstream Node	Downstream Invert Elevation (ft)	Length (ft)	Slope (%)	Diameter (in)	Material	Manning's n	Design Capacity (gpm)	Domestic Flow (gpm)	I/I Flow (gpm)	Total Flow (gpm)	Percent Full (%)	CIP No.	Notes
Kirkland_Main-2619	Kirkland_Manholes-1826	70.81	Kirkland_Manholes-1827	69.3	214.2	0.71	15	PVC	0.01	3,165	163	652	1,165	36.8		
Kirkland_Main-2620	Kirkland_Manholes-1824	72.16	Kirkland_Manholes-1826	70.81	200.6	0.67	15	PVC	0.01	3,092	162	644	1,156	37.4		
Kirkland_Main-2621	Kirkland_Manholes-1823	74.67	Kirkland_Manholes-1824	72.16	26.9	9.32	8	PVC	0.01	2,153	11	33	44	2	SM10	
Kirkland_Main-2622	Kirkland_Manholes-1822	87.17	Kirkland_Manholes-1823	74.67	362.6	3.45	8	PVC	0.01	1,309	8	25	33	2.5	SM10	
Kirkland_Main-2623	Kirkland_Manholes-1821	94.43	Kirkland_Manholes-1822	87.17	350	2.07	8	PVC	0.01	1,015	6	17	22	2.2	SM10	
Kirkland_Main-2624	Kirkland_Manholes-1820	95.81	Kirkland_Manholes-1821	94.43	359.9	0.38	8	PVC	0.01	437	3	8	11	2.5	SM10	
Kirkland_Main-2625	Kirkland_Manholes-1819	89.53	Kirkland_Manholes-1402	82.36	241.2	2.97	8	PVC	0.01	1,216	9	17	25	2.1	SM10	
Kirkland_Main-2626	Kirkland_Manholes-1818	98.86	Kirkland_Manholes-1819	89.53	204	4.57	8	PVC	0.01	1,508	6	8	15	1	SM10	
Kirkland_Main-2628	Kirkland_Manholes-1811	129.72	Kirkland_Manholes-1812	126.33	178.5	1.9	8	PVC	0.01	972	23	83	106	10.9	SM10	
Kirkland_Main-2629	Kirkland_Manholes-1812	126.33	Kirkland_Manholes-1813	123.92	54.8	4.4	8	PVC	0.01	1,479	24	91	115	7.8	SM14-Ex-EX139	
Kirkland_Main-2630	Kirkland_Manholes-1813	123.92	Kirkland_Manholes-1814	117.44	111.3	5.82	8	PVC	0.01	1,701	26	99	125	7.3	SM14-Ex-EX139	
Kirkland_Main-2631	Kirkland_Manholes-1814	117.44	Kirkland_Manholes-1817	109.22	155.5	5.28	8	PVC	0.01	1,621	29	116	145	8.9	SM10	
Kirkland_Main-2632	Kirkland_Manholes-1815	130.16	Kirkland_Manholes-1814	117.44	475.8	2.67	8	PVC	0.01	1,153	3	8	11	0.9	SM10	
Kirkland_Main-2633	Kirkland_Manholes-1816	115.31	Kirkland_Manholes-1825	112.27	360.1	0.84	8	PVC	0.01	648	4	8	12	1.9	SM10	
Kirkland_Main-2634	Kirkland_Manholes-1817	109.22	Kirkland_Manholes-1805	101.51	328.6	2.35	8	PVC	0.01	1,080	30	124	154	14.3	SM10	
Kirkland_Main-2635	Kirkland_Manholes-1831	166.9	Kirkland_Manholes-1190	151.12	137.2	11.5	8	PVC	0.01	2,391	2	8	10	0.4	SM14-Ex-EX83	
Kirkland_Main-2636	Kirkland_Manholes-1837	12.2	Kirkland_Manholes-1836	11	9.3	12.92	12	PVC	0.01	7,473	473	787	1,260	16.9		
Kirkland_Main-2637	Kirkland_Manholes-1834	11.35	Kirkland_Manholes-1835	11.1	27.9	0.9	12	PVC	0.01	1,967	19	91	110	5.6		
Kirkland_Main-2638	Kirkland_Manholes-1835	11.1	Kirkland_Manholes-1836	11	9.8	1.02	12	PVC	0.01	2,099	19	98	117	5.6		
Kirkland_Main-2639	Kirkland_Manholes-1832	17.68	Kirkland_Manholes-1833	16.5	43.9	2.69	8	PVC	0.01	1,155	3	7	9	0.8		
Kirkland_Main-2640	Kirkland_Manholes-1794	12.63	Kirkland_Manholes-1837	12.2	128.1	0.34	15	PVC	0.01	2,183	473	780	1,253	57.4		
Kirkland_Main-2641	Kirkland_Manholes-2679	83.65	Kirkland_Manholes-2880	81.72	80.2	2.41	8	PVC	0.01	1,094	1	6	7	0.7		
Kirkland_Main-2642	Kirkland_Manholes-2880	81.72	Kirkland_Manholes-2879	68.04	76.6	17.86	8	PVC	0.01	2,979	33	31	64	2.2		
Kirkland_Main-2644	Kirkland_Manholes-2885	165.69	Kirkland_Manholes-1111	165.6	145.4	0.06	8	PVC	0.01	175	0	4	5	2.6	SM14-Ex-EX9	
Kirkland_Main-2658	Kirkland_Manholes-480	484.34	Kirkland_Manholes-1493	479.91	224.4	1.97	8	PVC	0.01	991	4	4	8	0.8		
Kirkland_Main-2659	Kirkland_Manholes-3042	194.23	Kirkland_Manholes-2474	188.45	173.4	3.33	8	PVC	0.01	1,287	1	4	5	0.4		
Kirkland_Main-2663	Kirkland_Manholes-2886	151	Kirkland_Manholes-252	142.57	290.9	2.9	8	PVC	0.01	1,200	0	4	5	0.4	SM14-Ex-EX40	
Kirkland_Main-2666	Kirkland_Manholes-2887	302.33	Kirkland_Manholes-2888	290.53	197	5.99	8	PVC	0.01	1,725	8	17	25	1.5		
Kirkland_Main-2667	Kirkland_Manholes-1181	120.04	Kirkland_Manholes-2889	83.33	400.3	9.17	8	PVC	0.01	2,135	3	9	12	0.6	SM10	
Kirkland_Main-2668	Kirkland_Manholes-2889	83.33	Kirkland_Manholes-305	74.69	164.1	5.26	8	PVC	0.01	1,618	6	18	24	1.5	SM10	
Kirkland_Main-2670	Kirkland_Manholes-1624	183.67	Kirkland_Manholes-1625	179.1	84.9	5.38	8	PVC	0.01	1,636	10	30	41	2.5		
Kirkland_Main-2671	Kirkland_Manholes-1632	181.73	Kirkland_Manholes-1625	179.1	96.8	2.72	8	PVC	0.01	1,162	5	17	22	1.9		
Kirkland_Main-2672	Kirkland_Manholes-1627	199.21	Kirkland_Manholes-1626	191.61	142.7	5.33	8	PVC	0.01	1,627	10	21	31	1.9		
Kirkland_Main-2673	Kirkland_Manholes-1628	203.71	Kirkland_Manholes-1627	199.21	47.7	9.43	8	PVC	0.01	2,165	9	17	26	1.2		
Kirkland_Main-2674	Kirkland_Manholes-1629	216.45	Kirkland_Manholes-1628	203.71	87.7	14.52	8	PVC	0.01	2,687	8	13	21	0.8		
Kirkland_Main-2675	Kirkland_Manholes-1630	217.96	Kirkland_Manholes-1629	216.45	15.3	9.86	8	PVC	0.01	2,214	2	9	11	0.5		
Kirkland_Main-2676	Kirkland_Manholes-1631	193.59	Kirkland_Manholes-1632	181.73	96.1	12.34	8	PVC	0.01	2,477	4	13	17	0.7		
Kirkland_Main-2677	Kirkland_Manholes-1712	141.37	Kirkland_Manholes-1706	124.78	325.1	5.1	8	PVC	0.01	1,593	2	8	10	0.7	SM14-Ex-EX166	
Kirkland_Main-2678	Kirkland_Manholes-1716	100.64	Kirkland_Manholes-1715	96.61	119	3.39	8	PVC	0.01	1,298	18	8	26	2		
Kirkland_Main-2679	Kirkland_Manholes-1715	96.61	Kirkland_Manholes-1714	94.78	31.8	5.76	8	PVC	0.01	1,692	18	17	35	2.1		
Kirkland_Main-2680	Kirkland_Manholes-1713	108.19	Kirkland_Manholes-1714	94.78	126.8	10.57	8	PVC	0.01	2,293	10	8	19	0.8	SM14-Ex-EX186	
Kirkland_Main-2681	Kirkland_Manholes-1714	94.78	Kirkland_Manholes-1717	58.55	387.3	9.35	8	PVC	0.01	2,156	29	33	62	2.9	SM14-Ex-EX186	
Kirkland_Main-2685	Kirkland_Manholes-1720	51.16	Kirkland_Manholes-1722	47.26	30.1	12.97	8	PVC	0.01	2,539	46	25	70	2.8		
Kirkland_Main-2686	Kirkland_Manholes-1721	54.75	Kirkland_Manholes-1720	51.16	58.7	6.12	8	PVC	0.01	1,744	45	17	62	3.5	SM14-Ex-EX185	
Kirkland_Main-2687	Kirkland_Manholes-1723	62.26	Kirkland_Manholes-1721	54.75	207.5	3.62	8	PVC	0.01	1,341	42	8	50	3.7	SM14-Ex-EX185	
Kirkland_Main-2688	Kirkland_Manholes-1711	136.47	Kirkland_Manholes-1710	134.24	160.1	1.39	12	PVC	0.01	2,453	18	74	92	3.8	SM14-Ex-EX196	
Kirkland_Main-2689	Kirkland_Manholes-1734	24.57	Kirkland_Manholes-1737	24.2	117	0.32	12	PVC	0.01	1,169	173	132	305	26.1		
Kirkland_Main-2690	Kirkland_Manholes-1735	26.22	Kirkland_Manholes-1734	24.57	115.4	1.43	12	PVC	0.01	2,488	52	25	76	3.1		
Kirkland_Main-2691	Kirkland_Manholes-1729	25.06	Kirkland_Manholes-1734	24.57	158.2	0.31	12	PVC	0.01	1,157	121	99	220	19		
Kirkland_Main-2692	Kirkland_Manholes-1730	26.2	Kirkland_Manholes-1729	25.06	35.3	3.23	8	PVC	0.01	1,268	22	33	55	4.4		
Kirkland_Main-2693	Kirkland_Manholes-1731	27.35	Kirkland_Manholes-1730	26.2	207.2	0.55	8	PVC	0.01	525	17	25	42	8		
Kirkland_Main-2694	Kirkland_Manholes-1732	28.2	Kirkland_Manholes-1731	27.35	54.4	1.56	8	PVC	0.01	882	8	17	25	2.8	SM14-Ex-EX156	
Kirkland_Main-2695	Kirkland_Manholes-1733	28.74	Kirkland_Manholes-1732	28.2	66.1	0.82	8	PVC	0.01	637	8	8	16	2.5	SM14-Ex-EX156	
Kirkland_Main-2696	Kirkland_Manholes-1743	28.04	Kirkland_Manholes-1746	27.54	238.6	0.21	15	PVC	0.01	1,725	370	570	940	54.5	SM14-Ex-EX157	
Kirkland_Main-2697	Kirkland_Manholes-1746	27.54	MH_Selection_06-13-2016-4	25.37	27.6	7.87	15	PVC	0.01	10,571	375	619	995	9.4	SM14-Ex-EX157	Updated per as-built drawings
Kirkland_Main-2700	Kirkland_Manholes-1745	27.57	Kirkland_Manholes-1746	27.54	73.9	0.04	8	PVC	0.01	142	5	41	46	32.5		
Kirkland_Main-2702	Kirkland_Manholes-1737	24.2	MH_Selection_06-13-2016-5	24.55	145.6	-0.24	12	PVC	0.01	1,019	185	140	325	31.9		Updated per as-built drawings
Kirkland_Main-2703	Kirkland_Manholes-1736	26.69	Kirkland_Manholes-1735	26.22	88.6	0.53	8	PVC	0.01	513	51	17	67	13.1		
Kirkland_Main-2704	Kirkland_Manholes-1752	27.81	Kirkland_Manholes-1736	26.69	254.8	0.44	8	PVC	0.01	467	5	8	13	2.8		
Kirkland_Main-2705	Kirkland_Manholes-1765	114.35	Kirkland_Manholes-1764	112.57	108.8	1.64	8	PVC	0.01	902	3	8	11	1.2		
Kirkland_Main-2706	Kirkland_Manholes-1764	112.57	Kirkland_Manholes-1763	111.41	74.1	1.57	8	PVC	0.01	882	9	17	26	2.9		
Kirkland_Main-2707	Kirkland_Manholes-1763	111.41	Kirkland_Manholes-1761	99.41	212.2	5.65	10	PVC	0.01	3,040	18	58	76	2.5		

2035 (20-year) with Proposed Improvements - Peak Hour Flow - Pipe Capacity Table

Label	Upstream Node	Upstream Invert Elevation (ft)	Downstream Node	Downstream Invert Elevation (ft)	Length (ft)	Slope (%)	Diameter (in)	Material	Manning's n	Design Capacity (gpm)	Domestic Flow (gpm)	I/I Flow (gpm)	Total Flow (gpm)	Percent Full (%)	CIP No.	Notes
Kirkland_Main-2708	Kirkland_Manholes-1761	99.41	Kirkland_Manholes-1762	98.88	52.5	1.01	12	PVC	0.01	2,089	49	198	247	11.8	SM14-Ex-EX166	
Kirkland_Main-2709	Kirkland_Manholes-1706	124.78	Kirkland_Manholes-1761	99.41	406.8	6.24	12	PVC	0.01	5,191	30	132	162	3.1	SM14-Ex-EX166	
Kirkland_Main-2710	Kirkland_Manholes-1766	113.7	Kirkland_Manholes-1763	111.41	43.4	5.28	8	PVC	0.01	1,620	8	33	41	2.6	SM14-Ex-EX168	
Kirkland_Main-2711	Kirkland_Manholes-1767	122.16	Kirkland_Manholes-1766	113.7	181	4.67	8	PVC	0.01	1,524	8	25	32	2.1	SM14-Ex-EX168	
Kirkland_Main-2712	Kirkland_Manholes-1674	78.95	Kirkland_Manholes-1774	71.66	398	1.83	8	PVC	0.01	954	90	206	296	31.1		
Kirkland_Main-2713	Kirkland_Manholes-1774	71.66	Kirkland_Manholes-1773	69.68	129.9	1.52	8	PVC	0.01	871	93	215	307	35.3		
Kirkland_Main-2714	Kirkland_Manholes-1773	69.68	Kirkland_Manholes-1772	68.31	220	0.62	8	PVC	0.01	556	101	223	324	58.3		
Kirkland_Main-2715	Kirkland_Manholes-1768	72.13	Kirkland_Manholes-1772	68.31	229.6	1.66	12	PVC	0.01	2,680	71	248	318	11.9	SM14-Ex-EX166	
Kirkland_Main-2716	Kirkland_Manholes-1775	102.05	Kirkland_Manholes-1771	101.91	35.5	0.4	8	PVC	0.01	446	6	8	14	3.2		Drop Connection
Kirkland_Main-2717	Kirkland_Manholes-1771	99.82	Kirkland_Manholes-1770	99.51	78	0.4	8	PVC	0.01	446	8	17	25	5.5		Drop Connection
Kirkland_Main-2718	Kirkland_Manholes-1770	92.14	Kirkland_Manholes-1769	80.52	165	7.04	8	PVC	0.01	1,871	10	25	34	1.8		
Kirkland_Main-2719	Kirkland_Manholes-1769	80.52	Kirkland_Manholes-1768	72.13	44.6	18.83	8	PVC	0.01	3,059	10	33	43	1.4		
Kirkland_Main-2720	Kirkland_Manholes-1762	98.88	Kirkland_Manholes-1768	72.13	281.2	9.51	12	PVC	0.01	6,412	50	206	256	4	SM14-Ex-EX166	
Kirkland_Main-2721	Kirkland_Manholes-1742	45.09	Kirkland_Manholes-1740	35.99	141.8	6.42	10	PVC	0.01	3,238	283	479	761	23.5		
Kirkland_Main-2722	Kirkland_Manholes-1741	41.4	Kirkland_Manholes-1740	35.99	19.3	27.98	8	PVC	0.01	3,729	86	74	160	4.3		
Kirkland_Main-2723	Kirkland_Manholes-1722	47.26	Kirkland_Manholes-1742	45.09	91	2.38	12	PVC	0.01	3,210	282	471	752	23.4		
Kirkland_Main-2724	Kirkland_Manholes-1760	56.49	Kirkland_Manholes-1722	47.26	220.7	4.18	10	PVC	0.01	2,614	235	438	673	25.7		
Kirkland_Main-2725	Kirkland_Manholes-2143	61.9	Kirkland_Manholes-1760	56.49	198.1	2.73	10	PVC	0.01	2,112	219	429	648	30.7		
Kirkland_Main-2726	Kirkland_Manholes-1738	34.54	Kirkland_Manholes-1728	26.2	233.5	3.57	8	PVC	0.01	1,333	36	17	52	3.9	SM14-Ex-EX184	
Kirkland_Main-2727	Kirkland_Manholes-1739	35.68	Kirkland_Manholes-1738	34.54	39.2	2.91	8	PVC	0.01	1,202	1	8	9	0.7	SM14-Ex-EX184	
Kirkland_Main-2730	Kirkland_Manholes-1783	44.54	Kirkland_Manholes-1784	44.07	47.4	1	8	PVC	0.01	705	79	66	145	20.6		
Kirkland_Main-2731	Kirkland_Manholes-1786	41.21	Kirkland_Manholes-733	35.72	39.3	13.98	10	PVC	0.01	4,780	313	99	412	8.6		
Kirkland_Main-2732	Kirkland_Manholes-1787	42.06	Kirkland_Manholes-1786	41.21	134.7	0.63	10	PVC	0.01	1,016	313	91	404	39.7		
Kirkland_Main-2733	Kirkland_Manholes-1785	42.96	Kirkland_Manholes-1787	42.06	131.8	0.68	10	PVC	0.01	1,056	311	83	394	37.3		
Kirkland_Main-2734	Kirkland_Manholes-1920	409.24	Kirkland_Manholes-2925	409	89.7	0.27	12	PVC	0.01	1,075	159	395	553	51.5	SM14-Ex-EX215	
Kirkland_Main-2735	Kirkland_Manholes-2925	409	Kirkland_Manholes-1921	405.86	161.9	1.94	8	PVC	0.01	982	160	399	559	56.9	SM14-Ex-EX215	
Kirkland_Main-2736	Kirkland_Manholes-1784	44.07	Kirkland_Manholes-1785	42.96	150	0.74	10	PVC	0.01	1,100	310	74	385	35		
Kirkland_Main-2737	Kirkland_Manholes-1782	44.9	Kirkland_Manholes-1783	44.54	88.3	0.4	8	PVC	0.01	446	78	58	136	30.5		
Kirkland_Main-2738	Kirkland_Manholes-1781	45.04	Kirkland_Manholes-1782	44.9	34.7	0.4	8	PVC	0.01	446	78	50	127	28.5		
Kirkland_Main-2739	Kirkland_Manholes-1777	45.35	Kirkland_Manholes-1781	45.04	78.1	0.4	8	PVC	0.01	446	77	41	118	26.5		
Kirkland_Main-2740	Kirkland_Manholes-1779	45.97	Kirkland_Manholes-1778	45.85	28.6	0.4	8	PVC	0.01	446	7	17	23	5.3		
Kirkland_Main-2741	Kirkland_Manholes-1778	45.85	Kirkland_Manholes-1777	45.35	126.1	0.4	8	PVC	0.01	446	72	25	97	21.8		
Kirkland_Main-2742	Kirkland_Manholes-1780	57.25	Kirkland_Manholes-1779	45.97	252.4	4.47	8	PVC	0.01	1,491	6	8	15	1		
Kirkland_Main-2743	Kirkland_Manholes-1776	46.25	Kirkland_Manholes-1777	45.35	244.9	0.37	8	PVC	0.01	428	4	8	12	2.8		
Kirkland_Main-2745	Kirkland_Manholes-1696	58.41	Kirkland_Manholes-1695	51.29	146.7	4.85	8	PVC	0.01	1,553	77	223	300	19.3	SM14-Ex-EX96	
Kirkland_Main-2746	Kirkland_Manholes-1695	51.29	Kirkland_Manholes-1694	44.12	135.5	5.29	8	PVC	0.01	1,622	82	231	313	19.3	SM14-Ex-EX96	
Kirkland_Main-2748	Kirkland_Manholes-2107	69.19	Kirkland_Manholes-2106	63.43	225	2.56	8	PVC	0.01	1,128	2	7	9	0.8	SM14-Ex-EX227	
Kirkland_Main-2749	Kirkland_Manholes-2108	68.46	Kirkland_Manholes-2109	59.77	298.6	2.91	8	PVC	0.01	1,203	86	149	235	19.5	SM14-Ex-EX222	
Kirkland_Main-2750	Kirkland_Manholes-2119	72.3	Kirkland_Manholes-2108	68.46	400.8	0.96	8	PVC	0.01	690	66	99	165	23.9	SM14-Ex-EX222	
Kirkland_Main-2751	Kirkland_Manholes-2511	85.9	Kirkland_Manholes-2108	85.31	148.4	0.4	8	PVC	0.01	446	19	43	63	14	SM14-Ex-EX229	Drop Connection
Kirkland_Main-2752	Kirkland_Manholes-2109	59.77	Kirkland_Manholes-2111	59.56	305.5	0.07	12	PVC	0.01	545	91	155	245	45	SM14-Ex-EX222	
Kirkland_Main-2753	Kirkland_Manholes-2110	60.2	Kirkland_Manholes-2111	59.56	55.5	1.15	8	PVC	0.01	757	21	37	58	7.7	SM14-Ex-EX232	
Kirkland_Main-2754	Kirkland_Manholes-2112	88.66	Kirkland_Manholes-2110	60.2	228.7	12.44	8	PVC	0.01	2,487	20	31	50	2	SM14-Ex-EX232	
Kirkland_Main-2755	Kirkland_Manholes-2115	91.85	Kirkland_Manholes-2112	88.66	62.8	5.08	8	PVC	0.01	1,589	14	25	38	2.4	SM14-Ex-EX232	
Kirkland_Main-2756	Kirkland_Manholes-2113	121.3	Kirkland_Manholes-2115	91.85	150.4	19.59	8	PVC	0.01	3,120	7	12	20	0.6	SM14-Ex-EX232	
Kirkland_Main-2757	Kirkland_Manholes-2114	121.77	Kirkland_Manholes-2113	121.3	207.4	0.23	8	PVC	0.01	336	5	6	11	3.2		
Kirkland_Main-2758	Kirkland_Manholes-2116	91.9	Kirkland_Manholes-2115	91.85	279.7	0.02	8	PVC	0.01	94	5	6	11	11.5	SM14-Ex-EX232	
Kirkland_Main-2759	Kirkland_Manholes-2146	75.22	Kirkland_Manholes-2117	74.65	143.2	0.4	8	PVC	0.01	446	48	87	135	30.2	SM14-Ex-EX222	Drop Connection
Kirkland_Main-2760	Kirkland_Manholes-2117	73.78	Kirkland_Manholes-2119	72.3	427.2	0.35	8	PVC	0.01	415	49	93	142	34.3	SM14-Ex-EX222	
Kirkland_Main-2761	Kirkland_Manholes-2445	191.11	Kirkland_Manholes-2490	173.27	210.3	8.48	8	PVC	0.01	2,053	28	73	101	4.9	SM14-Ex-EX243	
Kirkland_Main-2763	Kirkland_Manholes-2446	217.36	Kirkland_Manholes-2444	199.73	226.7	7.78	8	PVC	0.01	1,966	5	13	18	0.9	SM14-Ex-EX245	
Kirkland_Main-2765	Kirkland_Manholes-1862	286.87	Kirkland_Manholes-1863	286.75	31.1	0.4	8	PVC	0.01	446	84	142	226	50.6		Drop Connection
Kirkland_Main-2766	Kirkland_Manholes-1863	286.33	Kirkland_Manholes-1864	285.22	36.3	3.06	8	PVC	0.01	1,233	85	146	231	18.7		
Kirkland_Main-2767	Kirkland_Manholes-1864	285.22	Kirkland_Manholes-1866	277.54	215.1	3.57	8	PVC	0.01	1,332	91	159	250	18.7		
Kirkland_Main-2768	Kirkland_Manholes-1865	285.61	Kirkland_Manholes-1864	285.22	36.3	1.07	8	PVC	0.01	731	6	9	14	2		
Kirkland_Main-2769	Kirkland_Manholes-2770	287.2	Kirkland_Manholes-1865	285.61	339.1	0.47	8	PVC	0.01	483	5	4	9	1.9		
Kirkland_Main-2770	Kirkland_Manholes-1871	279.1	Kirkland_Manholes-1866	277.54	120.2	1.3	8	PVC	0.01	803	6	30	36	4.4		
Kirkland_Main-2771	Kirkland_Manholes-1866	277.54	Kirkland_Manholes-1867	276.54	31.1	3.22	8	PVC	0.01	1,264	97	193	290	23		
Kirkland_Main-2772	Kirkland_Manholes-1867	276.54	Kirkland_Manholes-1868	257.42	267.6	7.15	8	PVC	0.01	1,885	98	197	295	15.7		
Kirkland_Main-2773	Kirkland_Manholes-1868	257.42	Kirkland_Manholes-1888	254.12	73.1	4.51	10	PVC	0.01	2,715	157	283	440	16.2		
Kirkland_Main-2774	Kirkland_Manholes-1887	260.26	Kirkland_Manholes-1868	257.42	270	1.05	8	PVC	0.01	723	58	82	140	19.3		
Kirkland_Main-2775	Kirkland_Manholes-1869	292.56	Kirkland_Manholes-1870	286.99	206.4	2.7	8	PVC	0.01	1,158	3	4	8	0.7		

2035 (20-year) with Proposed Improvements - Peak Hour Flow - Pipe Capacity Table

Label	Upstream Node	Upstream Invert Elevation (ft)	Downstream Node	Downstream Invert Elevation (ft)	Length (ft)	Slope (%)	Diameter (in)	Material	Manning's n	Design Capacity (gpm)	Domestic Flow (gpm)	I/I Flow (gpm)	Total Flow (gpm)	Percent Full (%)	CIP No.	Notes
Kirkland_Main-2776	Kirkland_Manholes-1870	286.99	Kirkland_Manholes-1871	279.1	130.7	6.04	8	PVC	0.01	1,732	4	9	12	0.7		
Kirkland_Main-2777	Kirkland_Manholes-1872	282.33	Kirkland_Manholes-1871	279.1	27.4	11.77	8	PVC	0.01	2,419	2	17	19	0.8		
Kirkland_Main-2778	Kirkland_Manholes-1896	286.15	Kirkland_Manholes-1872	282.33	252.6	1.51	8	PVC	0.01	867	1	13	14	1.6		
Kirkland_Main-2779	Kirkland_Manholes-1895	288.31	Kirkland_Manholes-1896	286.15	156.7	1.38	8	PVC	0.01	828	1	9	9	1.1		
Kirkland_Main-2781	Kirkland_Manholes-1894	292.07	Kirkland_Manholes-1895	288.31	37.7	9.98	8	PVC	0.01	2,227	0	4	5	0.2		
Kirkland_Main-2785	Kirkland_Manholes-1893	314.62	Kirkland_Manholes-1892	301.26	174.3	7.66	8	PVC	0.01	1,952	27	34	62	3.2		
Kirkland_Main-2786	Kirkland_Manholes-1892	301.26	Kirkland_Manholes-1882	297.55	110.1	3.37	8	PVC	0.01	1,294	31	43	74	5.7		
Kirkland_Main-2787	Kirkland_Manholes-1882	297.55	Kirkland_Manholes-1885	271.65	301.6	8.59	8	PVC	0.01	2,066	38	47	85	4.1		
Kirkland_Main-2788	Kirkland_Manholes-1883	295.15	Kirkland_Manholes-1885	271.65	83.7	28.09	8	PVC	0.01	3,737	11	21	32	0.9		
Kirkland_Main-2789	Kirkland_Manholes-1889	296.4	Kirkland_Manholes-1883	295.15	155.2	0.81	8	PVC	0.01	633	10	17	27	4.3		
Kirkland_Main-2790	Kirkland_Manholes-1884	299.38	Kirkland_Manholes-1889	296.4	51.3	5.81	8	PVC	0.01	1,699	6	13	19	1.1		
Kirkland_Main-2791	Kirkland_Manholes-1891	305.89	Kirkland_Manholes-1890	303.36	105.7	2.39	8	PVC	0.01	1,091	4	4	8	0.8		
Kirkland_Main-2792	Kirkland_Manholes-1890	303.36	Kirkland_Manholes-1884	299.38	71.4	5.58	8	PVC	0.01	1,665	5	9	14	0.8		
Kirkland_Main-2793	Kirkland_Manholes-1885	271.65	Kirkland_Manholes-1886	262.12	238.5	4	8	PVC	0.01	1,409	56	73	129	9.2		
Kirkland_Main-2794	Kirkland_Manholes-1886	262.12	Kirkland_Manholes-1887	260.26	298.4	0.62	8	PVC	0.01	557	57	77	134	24		
Kirkland_Main-2795	Kirkland_Manholes-1888	254.12	Kirkland_Manholes-1897	245.38	209.5	4.17	8	PVC	0.01	1,440	185	335	520	36.1		
Kirkland_Main-2796	Kirkland_Manholes-1877	246.77	Kirkland_Manholes-1873	243.35	391.2	0.87	8	PVC	0.01	659	75	129	203	30.9		
Kirkland_Main-2797	Kirkland_Manholes-1873	243.35	Kirkland_Manholes-1874	243.32	295.9	0.01	24	PVC	0.01	1,329	261	472	733	55.1	SM14-Ex-EX134	
Kirkland_Main-2798	Kirkland_Manholes-1875	249.18	Kirkland_Manholes-1876	247.77	111.8	1.26	8	PVC	0.01	792	26	4	30	3.8		
Kirkland_Main-2799	Kirkland_Manholes-1876	247.77	Kirkland_Manholes-1877	246.77	320.2	0.31	8	PVC	0.01	394	27	17	44	11.1		
Kirkland_Main-2800	Kirkland_Manholes-1878	249.88	Kirkland_Manholes-1877	246.77	242.5	1.28	8	PVC	0.01	798	47	107	155	19.4		
Kirkland_Main-2801	Kirkland_Manholes-1874	243.32	Kirkland_Manholes-1571	242.76	271.1	0.21	15	PVC	0.01	1,713	261	476	738	43.1		
Kirkland_Main-2802	Kirkland_Manholes-1881	267.11	Kirkland_Manholes-1879	258.08	239.4	3.77	8	PVC	0.01	1,369	44	94	138	10.1		
Kirkland_Main-2803	Kirkland_Manholes-1880	260.03	Kirkland_Manholes-1879	258.08	143.3	1.36	8	PVC	0.01	822	3	4	7	0.9		
Kirkland_Main-2805	Kirkland_Manholes-1879	258.08	Kirkland_Manholes-1878	249.88	231.7	3.54	8	PVC	0.01	1,326	47	103	150	11.3		
Kirkland_Main-2806	Kirkland_Manholes-1897	245.38	Kirkland_Manholes-1873	243.35	282.6	0.72	10	PVC	0.01	1,084	186	339	525	48.4		
Kirkland_Main-2807	Kirkland_Manholes-1902	406.33	Kirkland_Manholes-1899	405.32	253.1	0.4	8	PVC	0.01	447	2	4	6	1.3		
Kirkland_Main-2808	Kirkland_Manholes-1899	405.32	Kirkland_Manholes-1898	404.75	141.4	0.4	8	PVC	0.01	446	3	9	11	2.5		
Kirkland_Main-2809	Kirkland_Manholes-1898	404.75	Kirkland_Manholes-1900	402.51	135.8	1.65	8	PVC	0.01	905	4	13	17	1.9		
Kirkland_Main-2810	Kirkland_Manholes-1900	402.51	Kirkland_Manholes-1901	396.95	219.6	2.53	8	PVC	0.01	1,122	6	17	23	2.1		
Kirkland_Main-2811	Kirkland_Manholes-1901	396.95	Kirkland_Manholes-1905	395.5	142.8	1.02	8	PVC	0.01	711	7	21	29	4		
Kirkland_Main-2812	Kirkland_Manholes-1903	399.77	Kirkland_Manholes-1904	399.67	107.5	0.09	8	PVC	0.01	215	6	13	19	8.6		
Kirkland_Main-2813	Kirkland_Manholes-1904	399.67	Kirkland_Manholes-1905	395.5	126.3	3.3	8	PVC	0.01	1,281	7	17	24	1.9		
Kirkland_Main-2814	Kirkland_Manholes-2220	93.99	Kirkland_Manholes-2219	92.24	194.8	0.9	8	PVC	0.01	668	1	7	8	1.1		
Kirkland_Main-2815	Kirkland_Manholes-2219	92.24	Kirkland_Manholes-2218	82.71	300.9	3.17	8	PVC	0.01	1,255	4	13	17	1.3		
Kirkland_Main-2824	Kirkland_Manholes-2222	72.19	Kirkland_Manholes-2221	60.29	232.5	5.12	8	PVC	0.01	1,595	4	20	24	1.5		
Kirkland_Main-2825	Kirkland_Manholes-2223	75.05	Kirkland_Manholes-2222	72.19	181.6	1.58	8	PVC	0.01	885	2	13	15	1.7		
Kirkland_Main-2826	Kirkland_Manholes-2224	76.4	Kirkland_Manholes-2223	75.05	210.4	0.64	8	PVC	0.01	565	1	7	8	1.3		
Kirkland_Main-2829	Kirkland_Manholes-2233	60.15	Kirkland_Manholes-2232	48.59	76.7	15.07	8	PVC	0.01	2,737	16	7	23	0.8		
Kirkland_Main-2830	Kirkland_Manholes-2232	48.59	Kirkland_Manholes-2231	25.71	219.7	10.42	8	PVC	0.01	2,275	17	13	30	1.3		
Kirkland_Main-2831	Kirkland_Manholes-2231	25.71	Kirkland_Manholes-2230	23.3	56.5	4.26	8	PVC	0.01	1,456	17	20	37	2.5		
Kirkland_Main-2832	Kirkland_Manholes-2230	23.3	Kirkland_Manholes-2229	22.53	34.1	2.26	8	PVC	0.01	1,060	17	33	50	4.7		
Kirkland_Main-2833	Kirkland_Manholes-2210	47.75	Kirkland_Manholes-2205	23.1	33.9	72.62	8	PVC	0.01	6,008	8	26	34	0.6	SM14-Ex-EX189	Slope verified in as-builts
Kirkland_Main-2834	Kirkland_Manholes-2211	51.73	Kirkland_Manholes-2210	47.75	86.6	4.6	8	PVC	0.01	1,512	7	20	27	1.8		
Kirkland_Main-2835	Kirkland_Manholes-2207	54.13	Kirkland_Manholes-2211	51.73	163.6	1.47	8	PVC	0.01	854	1	13	14	1.6		
Kirkland_Main-2836	Kirkland_Manholes-2206	66.42	Kirkland_Manholes-2198	65.46	282.2	0.34	8	PVC	0.01	411	3	17	20	4.7	SM8	
Kirkland_Main-2837	Kirkland_Manholes-2198	65.46	Kirkland_Manholes-2193	64.5	239.8	0.4	8	PVC	0.01	446	6	25	30	6.8	SM14-Ex-EX187	
Kirkland_Main-2839	Kirkland_Manholes-2084	179.07	Kirkland_Manholes-2069	170.43	427.7	2.02	12	PVC	0.01	2,954	76	77	153	5.2	SM14-Ex-EX199	
Kirkland_Main-2840	Kirkland_Manholes-2085	183.55	Kirkland_Manholes-2084	179.07	426.7	1.05	12	PVC	0.01	2,130	75	73	148	7	SM14-Ex-EX199	
Kirkland_Main-2841	Kirkland_Manholes-2086	187.61	Kirkland_Manholes-2085	183.55	445.4	0.91	12	PVC	0.01	1,985	73	69	142	7.1	SM1	
Kirkland_Main-2842	Kirkland_Manholes-2074	213.49	Kirkland_Manholes-2086	187.61	333.1	7.77	8	PVC	0.01	1,965	55	56	111	5.6	SM14-Ex-EX246	
Kirkland_Main-2843	Kirkland_Manholes-2087	189.64	Kirkland_Manholes-2086	187.61	250.4	0.81	12	PVC	0.01	1,872	9	9	18	1	SM1	
Kirkland_Main-2844	Kirkland_Manholes-2301	194.13	Kirkland_Manholes-2087	189.64	258.5	1.74	12	PVC	0.01	2,740	1	4	5	0.2	SM1	
Kirkland_Main-2845	Kirkland_Manholes-2838	108.96	Kirkland_Manholes-2837	104.37	77.8	5.9	8	PVC	0.01	1,712	7	6	13	0.8		
Kirkland_Main-2846	Kirkland_Manholes-2837	104.37	Kirkland_Manholes-2836	60.97	275.8	15.74	8	PVC	0.01	2,797	8	12	21	0.7		
Kirkland_Main-2847	Kirkland_Manholes-2834	37.62	Kirkland_Manholes-2849	29.21	55.8	15.07	12	PVC	0.01	8,071	60	130	190	2.4	SM14-Ex-EX316	
Kirkland_Main-2848	Kirkland_Manholes-2833	29.99	Kirkland_Manholes-2849	29.21	264.4	0.3	18	PVC	0.01	3,329	512	1,078	1,662	49.9	SM14-Ex-EX309	
Kirkland_Main-2849	Kirkland_Manholes-2849	29.21	Kirkland_Manholes-2848	28.9	205.9	0.15	24	PVC	0.01	5,112	573	1,215	1,859	36.4	SM14-Ex-EX309	Drop Connection
Kirkland_Main-2850	Kirkland_Manholes-2848	27.55	Kirkland_Manholes-2842	26.9	429.8	0.15	24	PVC	0.01	5,133	579	1,221	1,871	36.4	SM14-Ex-EX309	
Kirkland_Main-2851	Kirkland_Manholes-1941	361.64	Kirkland_Manholes-1942	350.59	169	6.54	8	PVC	0.01	1,803	3	9	12	0.6		
Kirkland_Main-2852	Kirkland_Manholes-1943	356.18	Kirkland_Manholes-1942	350.59	121.8	4.59	8	PVC	0.01	1,511	1	4	5	0.3		
Kirkland_Main-2853	Kirkland_Manholes-1942	350.59	Kirkland_Manholes-1577	341.43	212	4.32	8	PVC	0.01	1,465	4	17	21	1.5		

2035 (20-year) with Proposed Improvements - Peak Hour Flow - Pipe Capacity Table

Label	Upstream Node	Upstream Invert Elevation (ft)	Downstream Node	Downstream Invert Elevation (ft)	Length (ft)	Slope (%)	Diameter (in)	Material	Manning's n	Design Capacity (gpm)	Domestic Flow (gpm)	I/I Flow (gpm)	Total Flow (gpm)	Percent Full (%)	CIP No.	Notes
Kirkland_Main-2854	Kirkland_Manholes-1944	388.13	Kirkland_Manholes-1945	370.88	207.3	8.32	8	PVC	0.01	2,034	1	4	5	0.3		
Kirkland_Main-2855	Kirkland_Manholes-1945	370.88	Kirkland_Manholes-1946	363.75	185.3	3.85	8	PVC	0.01	1,383	2	9	11	0.8		
Kirkland_Main-2856	Kirkland_Manholes-1946	363.75	Kirkland_Manholes-1947	358.01	122.1	4.7	8	PVC	0.01	1,529	3	13	16	1.1		
Kirkland_Main-2857	Kirkland_Manholes-1947	358.01	Kirkland_Manholes-1948	350.2	125.9	6.2	8	PVC	0.01	1,756	4	17	21	1.2		
Kirkland_Main-2858	Kirkland_Manholes-1949	352.67	Kirkland_Manholes-1948	350.2	274.7	0.9	8	PVC	0.01	669	3	4	7	1		
Kirkland_Main-2859	Kirkland_Manholes-1948	350.2	Kirkland_Manholes-1950	344.53	121.4	4.67	8	PVC	0.01	1,524	8	26	34	2.2		
Kirkland_Main-2860	Kirkland_Manholes-1950	344.53	Kirkland_Manholes-1893	314.62	313.2	9.55	8	PVC	0.01	2,179	10	30	40	1.8		
Kirkland_Main-2861	Kirkland_Manholes-1952	275.36	Kirkland_Manholes-1951	275.06	208.2	0.14	8	PVC	0.01	268	7	43	50	18.8		
Kirkland_Main-2862	Kirkland_Manholes-1953	290.71	Kirkland_Manholes-1952	275.36	336.8	4.56	8	PVC	0.01	1,505	7	39	46	3		
Kirkland_Main-2863	Kirkland_Manholes-1957	343.4	Kirkland_Manholes-1956	335.87	142.5	5.28	8	PVC	0.01	1,620	0	4	5	0.3		
Kirkland_Main-2864	Kirkland_Manholes-1956	335.87	Kirkland_Manholes-1955	335.45	105.5	0.4	8	PVC	0.01	446	1	9	9	2.1		
Kirkland_Main-2865	Kirkland_Manholes-1975	436.73	Kirkland_Manholes-1974	432	247.5	1.91	8	PVC	0.01	975	40	133	173	17.7		
Kirkland_Main-2866	Kirkland_Manholes-1976	440.77	Kirkland_Manholes-1975	436.73	231.1	1.75	8	PVC	0.01	932	16	43	59	6.3		
Kirkland_Main-2867	Kirkland_Manholes-1978	440.32	Kirkland_Manholes-1975	436.73	342.8	1.05	8	PVC	0.01	721	23	86	108	15		
Kirkland_Main-2868	Kirkland_Manholes-1977	454.61	Kirkland_Manholes-1976	440.77	262.5	5.27	8	PVC	0.01	1,619	11	34	45	2.8		
Kirkland_Main-2869	Kirkland_Manholes-1980	464.9	Kirkland_Manholes-1977	454.61	328.6	3.13	8	PVC	0.01	1,248	8	26	33	2.7		
Kirkland_Main-2870	Kirkland_Manholes-1979	446.84	Kirkland_Manholes-1978	440.32	179.3	3.64	8	PVC	0.01	1,345	3	4	7	0.5		
Kirkland_Main-2871	Kirkland_Manholes-1984	465.6	Kirkland_Manholes-1980	464.9	159.8	0.44	8	PVC	0.01	467	5	17	23	4.8		
Kirkland_Main-2872	Kirkland_Manholes-1982	470.94	Kirkland_Manholes-1980	464.9	329.7	1.83	8	PVC	0.01	954	2	4	6	0.6		
Kirkland_Main-2873	Kirkland_Manholes-1985	470.88	Kirkland_Manholes-1981	467.1	204.6	1.85	8	PVC	0.01	958	2	4	6	0.6		
Kirkland_Main-2874	Kirkland_Manholes-1986	467.24	Kirkland_Manholes-1981	467.1	144.7	0.1	8	PVC	0.01	219	1	4	5	2.3		
Kirkland_Main-2875	Kirkland_Manholes-1983	469.93	Kirkland_Manholes-2019	467.83	75.8	2.77	8	PVC	0.01	1,174	1	4	5	0.5		
Kirkland_Main-2876	Kirkland_Manholes-1981	467.1	Kirkland_Manholes-1984	465.6	153	0.98	8	PVC	0.01	698	4	13	16	2.4		
Kirkland_Main-2877	Kirkland_Manholes-1987	443.37	Kirkland_Manholes-1976	440.77	252.9	1.03	8	PVC	0.01	715	2	4	6	0.9		
Kirkland_Main-2878	Kirkland_Manholes-2002	429.3	Kirkland_Manholes-2000	426.18	243.7	1.28	8	PVC	0.01	798	2	9	10	1.3	SM14-Ex-EX209	
Kirkland_Main-2879	Kirkland_Manholes-2000	426.18	Kirkland_Manholes-2001	424.5	24.1	6.98	8	PVC	0.01	1,863	23	69	91	4.9	SM14-Ex-EX209	
Kirkland_Main-2880	Kirkland_Manholes-1999	430.91	Kirkland_Manholes-2000	426.18	304.8	1.55	8	PVC	0.01	878	21	56	77	8.7	SM14-Ex-EX211	
Kirkland_Main-2881	Kirkland_Manholes-2001	424.5	Kirkland_Manholes-2063	422.68	357.6	0.51	8	PVC	0.01	503	23	73	96	19.1	SM14-Ex-EX209	
Kirkland_Main-2882	Kirkland_Manholes-2003	431.01	Kirkland_Manholes-2002	429.3	155.3	1.1	8	PVC	0.01	740	1	4	5	0.7		
Kirkland_Main-2883	Kirkland_Manholes-2015	418.27	Kirkland_Manholes-2014	416.63	83.6	1.96	8	PVC	0.01	988	38	94	132	13.4		
Kirkland_Main-2884	Kirkland_Manholes-2014	416.63	Kirkland_Manholes-2013	413.74	146.6	1.97	8	PVC	0.01	990	39	99	138	13.9		
Kirkland_Main-2886	Kirkland_Manholes-2010	424.43	Kirkland_Manholes-2016	421.46	333.6	0.89	8	PVC	0.01	665	33	86	119	17.9		
Kirkland_Main-2887	Kirkland_Manholes-2016	421.46	Kirkland_Manholes-2015	418.27	330.4	0.97	8	PVC	0.01	693	36	90	126	18.2		
Kirkland_Main-2889	Kirkland_Manholes-2021	473.17	Kirkland_Manholes-2020	468.34	27.5	17.56	8	PVC	0.01	2,954	41	99	139	4.7		
Kirkland_Main-2890	Kirkland_Manholes-2020	468.34	Kirkland_Manholes-2019	467.83	127.5	0.4	10	PVC	0.01	809	159	258	417	51.5		
Kirkland_Main-2891	Kirkland_Manholes-2023	466.76	Kirkland_Manholes-2022	466	41.6	1.83	8	PVC	0.01	953	12	21	33	3.5		
Kirkland_Main-2892	Kirkland_Manholes-2037	465.67	Kirkland_Manholes-2036	452.58	367.2	3.57	8	PVC	0.01	1,331	12	17	29	2.2	SM14-Ex-EX266	
Kirkland_Main-2893	Kirkland_Manholes-2041	465.42	Kirkland_Manholes-2042	455.6	502.4	1.95	8	PVC	0.01	986	3	4	7	0.7	SM14-Ex-EX265	
Kirkland_Main-2894	Kirkland_Manholes-2042	455.6	Kirkland_Manholes-2043	454.68	150.3	0.61	12	PVC	0.01	1,626	106	300	407	25	SM14-Ex-EX214	
Kirkland_Main-2895	Kirkland_Manholes-2044	435.14	Kirkland_Manholes-2045	432.5	20.8	12.67	12	PVC	0.01	7,399	110	309	419	5.7	SM14-Ex-EX214	
Kirkland_Main-2896	Kirkland_Manholes-2043	454.68	Kirkland_Manholes-2044	435.14	356.2	5.49	12	PVC	0.01	4,869	108	305	412	8.5	SM14-Ex-EX214	
Kirkland_Main-2897	Kirkland_Manholes-2046	437.24	Kirkland_Manholes-2045	432.5	199.5	2.38	10	PVC	0.01	1,970	203	365	568	28.8		
Kirkland_Main-2898	Kirkland_Manholes-2047	441.15	Kirkland_Manholes-2046	437.24	49.2	7.95	10	PVC	0.01	3,605	202	361	562	15.6		
Kirkland_Main-2899	Kirkland_Manholes-2048	442.51	Kirkland_Manholes-2047	441.15	76.6	1.77	8	PVC	0.01	939	201	356	557	59.3	SM14-Ex-EX264	
Kirkland_Main-2900	Kirkland_Manholes-2049	454.48	Kirkland_Manholes-2050	439.64	163.1	9.1	8	PVC	0.01	2,126	2	4	6	0.3	SM14-Ex-EX263	
Kirkland_Main-2901	Kirkland_Manholes-2050	439.64	Kirkland_Manholes-2051	434.18	313	1.74	8	PVC	0.01	931	4	9	13	1.4	SM14-Ex-EX263	
Kirkland_Main-2902	Kirkland_Manholes-2051	434.18	Kirkland_Manholes-2054	429.73	307.2	1.45	8	PVC	0.01	849	6	13	19	2.3	SM14-Ex-EX263	
Kirkland_Main-2903	Kirkland_Manholes-2053	424.91	Kirkland_Manholes-2285	419.89	165.8	3.03	8	PVC	0.01	1,227	1	4	6	0.5	SM14-Ex-EX248	
Kirkland_Main-2904	Kirkland_Manholes-2054	429.73	Kirkland_Manholes-2055	427.92	21.3	8.48	8	PVC	0.01	2,053	7	17	25	1.2		
Kirkland_Main-2905	Kirkland_Manholes-3044	18.06	Kirkland_Manholes-2736	17.76	69.7	0.43	18	PVC	0.01	4,020	337	526	863	21.5	SM14-Ex-EX289	
Kirkland_Main-2906	Kirkland_Manholes-2045	432.5	Kirkland_Manholes-2055	427.92	351.4	1.3	10	PVC	0.01	1,460	314	678	992	68		
Kirkland_Main-2907	Kirkland_Manholes-2057	422.6	Kirkland_Manholes-2056	422.2	14.4	2.79	10	PVC	0.01	2,134	337	717	1,054	49.4		
Kirkland_Main-2908	Kirkland_Manholes-1848	462	Kirkland_Manholes-1216	443.89	186.3	9.72	8	PVC	0.01	2,198	3	4	7	0.3		
Kirkland_Main-2909	Kirkland_Manholes-2056	422.2	Kirkland_Manholes-2285	419.89	62.2	3.71	8	PVC	0.01	1,359	338	721	1,059	77.9		
Kirkland_Main-2910	Kirkland_Manholes-2058	427.27	Kirkland_Manholes-2057	422.6	119.2	3.92	10	PVC	0.01	2,531	336	713	1,049	41.4		
Kirkland_Main-2911	Kirkland_Manholes-2055	427.92	Kirkland_Manholes-2058	427.27	53.1	1.22	10	PVC	0.01	1,414	322	700	1,021	72.2		
Kirkland_Main-2912	Kirkland_Manholes-2059	433	Kirkland_Manholes-2058	427.27	231.2	2.48	8	PVC	0.01	1,110	14	9	23	2.1	SM14-Ex-EX213	
Kirkland_Main-2913	Kirkland_Manholes-3082	428.49	Kirkland_Manholes-1992	427.27	187.8	0.65	8	PVC	0.01	568	4	9	13	2.3		
Kirkland_Main-2914	Kirkland_Manholes-1992	427.27	Kirkland_Manholes-2009	426.97	143.6	0.21	8	PVC	0.01	322	20	52	72	22.2		
Kirkland_Main-2915	Kirkland_Manholes-1991	431.18	Kirkland_Manholes-1992	427.27	327	1.2	8	PVC	0.01	771	15	39	54	7		
Kirkland_Main-2916	Kirkland_Manholes-2004	427.75	Kirkland_Manholes-2010	424.43	322.6	1.03	8	PVC	0.01	715	9	26	34	4.8		
Kirkland_Main-2917	Kirkland_Manholes-2007	429.08	Kirkland_Manholes-2004	427.75	98.7	1.35	8	PVC	0.01	819	8	21	30	3.6		

2035 (20-year) with Proposed Improvements - Peak Hour Flow - Pipe Capacity Table

Label	Upstream Node	Upstream Invert Elevation (ft)	Downstream Node	Downstream Invert Elevation (ft)	Length (ft)	Slope (%)	Diameter (in)	Material	Manning's n	Design Capacity (gpm)	Domestic Flow (gpm)	I/I Flow (gpm)	Total Flow (gpm)	Percent Full (%)	CIP No.	Notes
Kirkland_Main-2918	Kirkland_Manholes-2260	285.07	Kirkland_Manholes-2259	272.05	278.2	4.68	12	PVC	0.01	4,497	394	923	1,317	29.3	SM14-Ex-EX248	
Kirkland_Main-2919	Kirkland_Manholes-2259	272.05	Kirkland_Manholes-2258	263.77	196.6	4.21	12	PVC	0.01	4,266	400	932	1,332	31.2	SM14-Ex-EX248	
Kirkland_Main-2920	Kirkland_Manholes-2323	247.45	Kirkland_Manholes-2324	245.37	33.9	6.13	8	PVC	0.01	1,746	50	142	192	11		
Kirkland_Main-2921	Kirkland_Manholes-2322	259.98	Kirkland_Manholes-2323	247.45	184.9	6.78	8	PVC	0.01	1,836	49	137	186	10.1	SM14-Ex-EX252	
Kirkland_Main-2922	Kirkland_Manholes-2325	246.61	Kirkland_Manholes-2324	245.37	131.1	0.95	8	PVC	0.01	686	6	13	19	2.8		
Kirkland_Main-2923	Kirkland_Manholes-2329	258.36	Kirkland_Manholes-2325	246.61	302.7	3.88	8	PVC	0.01	1,389	4	9	13	0.9		
Kirkland_Main-2924	Kirkland_Manholes-2328	273.89	Kirkland_Manholes-2329	258.36	228.5	6.8	8	PVC	0.01	1,838	2	4	6	0.3		
Kirkland_Main-2925	Kirkland_Manholes-2339	347.35	Kirkland_Manholes-2337	345.83	131	1.16	8	PVC	0.01	760	4	9	12	1.6	SM14-Ex-EX256	
Kirkland_Main-2926	Kirkland_Manholes-2337	345.83	Kirkland_Manholes-2338	328.54	114.6	15.08	8	PVC	0.01	2,738	6	13	19	0.7	SM14-Ex-EX256	
Kirkland_Main-2927	Kirkland_Manholes-2334	313.34	Kirkland_Manholes-2333	308.81	129.8	3.49	8	PVC	0.01	1,317	34	82	116	8.8	SM14-Ex-EX252	
Kirkland_Main-2928	Kirkland_Manholes-2333	308.81	Kirkland_Manholes-2332	296.43	179.4	6.9	8	PVC	0.01	1,852	35	86	121	6.5	SM14-Ex-EX252	
Kirkland_Main-2929	Kirkland_Manholes-2332	296.43	Kirkland_Manholes-2331	295.51	98.1	0.94	8	PVC	0.01	683	38	94	132	19.4	SM14-Ex-EX252	
Kirkland_Main-2930	Kirkland_Manholes-2718	21.4	Kirkland_Manholes-2721	21.2	187	0.11	12	PVC	0.01	680	90	37	127	18.8	SM14-Ex-EX289	
Kirkland_Main-2931	Kirkland_Manholes-2331	295.51	Kirkland_Manholes-2330	295.18	115.3	0.29	8	PVC	0.01	377	39	99	137	36.4	SM14-Ex-EX252	
Kirkland_Main-2932	Kirkland_Manholes-2327	280.44	Kirkland_Manholes-2326	264.71	213.4	7.37	8	PVC	0.01	1,914	45	129	174	9.1	SM14-Ex-EX252	
Kirkland_Main-2933	Kirkland_Manholes-2326	264.71	Kirkland_Manholes-2322	259.98	165.9	2.85	8	PVC	0.01	1,190	47	133	180	15.1	SM14-Ex-EX252	
Kirkland_Main-2935	Kirkland_Manholes-2342	370.03	Kirkland_Manholes-2339	347.35	229.4	9.89	8	PVC	0.01	2,217	3	4	7	0.3	SM14-Ex-EX256	
Kirkland_Main-2936	Kirkland_Manholes-2340	335.99	Kirkland_Manholes-2379	312.61	331.3	7.06	8	PVC	0.01	1,873	2	4	6	0.3	SM14-Ex-EX257	
Kirkland_Main-2937	Kirkland_Manholes-2338	328.54	Kirkland_Manholes-2341	327.28	253.7	0.5	8	PVC	0.01	497	8	17	26	5.2	SM14-Ex-EX256	
Kirkland_Main-2938	Kirkland_Manholes-2341	327.28	Kirkland_Manholes-2335	323.22	289.5	1.4	8	PVC	0.01	835	12	26	38	4.5	SM14-Ex-EX256	
Kirkland_Main-2939	Kirkland_Manholes-2336	342.09	Kirkland_Manholes-2341	327.28	137.3	10.78	8	PVC	0.01	2,315	2	4	7	0.3	SM14-Ex-EX256	Drop Connection
Kirkland_Main-2940	Kirkland_Manholes-2349	361.19	Kirkland_Manholes-2335	323.22	315.1	12.05	8	PVC	0.01	2,448	2	4	6	0.3	SM14-Ex-EX252	
Kirkland_Main-2941	Kirkland_Manholes-2335	323.22	Kirkland_Manholes-2334	323.19	8.2	0.4	8	PVC	0.01	446	15	34	49	11	SM14-Ex-EX252	Drop Connection
Kirkland_Main-2942	Kirkland_Manholes-2343	315.2	Kirkland_Manholes-2348	314.6	208.7	0.29	8	PVC	0.01	378	17	39	56	14.8	SM14-Ex-EX254	
Kirkland_Main-2944	Kirkland_Manholes-2915	422.99	Kirkland_Manholes-2916	416.17	267.2	2.55	8	PVC	0.01	1,126	7	17	24	2.2		
Kirkland_Main-2945	Kirkland_Manholes-2916	416.17	Kirkland_Manholes-2936	415.17	403.5	0.25	8	PVC	0.01	351	11	26	37	10.4		
Kirkland_Main-2946	Kirkland_Manholes-2917	449.84	Kirkland_Manholes-2918	440.81	194.6	4.64	8	PVC	0.01	1,519	1	4	6	0.4		
Kirkland_Main-2947	Kirkland_Manholes-2918	440.81	Kirkland_Manholes-2919	429.45	198.9	5.71	8	PVC	0.01	1,685	4	9	12	0.7		
Kirkland_Main-2948	Kirkland_Manholes-2919	429.45	Kirkland_Manholes-2915	422.99	217.1	2.98	8	PVC	0.01	1,216	6	13	19	1.5		
Kirkland_Main-2949	Kirkland_Manholes-2922	91.28	Kirkland_Manholes-2921	73.76	147.5	11.88	8	PVC	0.01	2,430	5	13	18	0.8		
Kirkland_Main-2951	Kirkland_Manholes-2923	92.6	Kirkland_Manholes-2922	91.28	84.5	1.56	8	PVC	0.01	881	1	4	6	0.7		
Kirkland_Main-2952	Kirkland_Manholes-2924	104.01	Kirkland_Manholes-2922	91.28	265	4.8	8	PVC	0.01	1,545	3	4	7	0.5		
Kirkland_Main-2953	Kirkland_Manholes-2423	267.38	Kirkland_Manholes-2421	253.02	328.6	4.37	8	PVC	0.01	1,474	4	4	8	0.5		
Kirkland_Main-2954	Kirkland_Manholes-2429	273.52	Kirkland_Manholes-2424	257.66	398.8	3.98	8	PVC	0.01	1,406	40	103	143	10.2	SM14-Ex-EX260	
Kirkland_Main-2955	Kirkland_Manholes-2425	261.07	Kirkland_Manholes-2424	257.66	270.7	1.26	12	PVC	0.01	2,333	220	228	448	19.2	SM2	
Kirkland_Main-2956	Kirkland_Manholes-2426	264.11	Kirkland_Manholes-2425	261.07	237.2	1.28	12	PVC	0.01	2,353	212	206	418	17.8	SM2	
Kirkland_Main-2957	Kirkland_Manholes-2430	273.69	Kirkland_Manholes-2425	261.07	254.1	4.97	8	PVC	0.01	1,571	7	17	24	1.5	SM14-Ex-EX286	
Kirkland_Main-2958	Kirkland_Manholes-2427	267.5	Kirkland_Manholes-2426	266.42	268.8	0.4	12	PVC	0.01	1,315	211	202	412	31.4	SM2	Drop Connection
Kirkland_Main-2959	Kirkland_Manholes-2428	270.37	Kirkland_Manholes-2427	267.5	310.1	0.93	8	PVC	0.01	678	149	172	321	47.3	SM2	
Kirkland_Main-2960	Kirkland_Manholes-2431	277.03	Kirkland_Manholes-2430	273.69	201.8	1.66	8	PVC	0.01	907	1	4	5	0.6		
Kirkland_Main-2961	Kirkland_Manholes-2433	263.87	Kirkland_Manholes-2434	245.33	172.7	10.73	8	PVC	0.01	2,310	4	9	12	0.5	SM14-Ex-EX244	
Kirkland_Main-2962	Kirkland_Manholes-2434	245.33	Kirkland_Manholes-2437	244.43	228.6	0.39	8	PVC	0.01	442	6	13	19	4.3	SM14-Ex-EX244	
Kirkland_Main-2963	Kirkland_Manholes-2437	244.43	Kirkland_Manholes-2436	225.88	256.7	7.23	8	PVC	0.01	1,895	8	17	26	1.3	SM14-Ex-EX244	
Kirkland_Main-2964	Kirkland_Manholes-2514	400.04	Kirkland_Manholes-2517	387	217.1	6.01	8	PVC	0.01	1,728	10	22	32	1.9		
Kirkland_Main-2965	Kirkland_Manholes-2515	393.7	Kirkland_Manholes-2516	391.18	190.1	1.33	8	PVC	0.01	812	4	4	9	1.1		
Kirkland_Main-2966	Kirkland_Manholes-2516	391.18	Kirkland_Manholes-2517	387	163.7	2.55	8	PVC	0.01	1,127	6	9	15	1.3		
Kirkland_Main-2967	Kirkland_Manholes-2517	387	Kirkland_Manholes-2518	378.45	142.8	5.99	8	PVC	0.01	1,725	17	35	52	3		
Kirkland_Main-2968	Kirkland_Manholes-2518	378.45	Kirkland_Manholes-2524	346.56	373.5	8.54	8	PVC	0.01	2,060	36	39	75	3.7		
Kirkland_Main-2969	Kirkland_Manholes-2520	374.03	Kirkland_Manholes-2521	363.83	98.2	10.38	8	PVC	0.01	2,272	2	4	7	0.3		
Kirkland_Main-2970	Kirkland_Manholes-2435	226.37	Kirkland_Manholes-2436	225.88	121.8	0.4	8	PVC	0.01	446	2	4	7	1.5	SM14-Ex-EX285	
Kirkland_Main-2971	Kirkland_Manholes-2436	225.88	Kirkland_Manholes-2438	209.72	279.9	5.77	8	PVC	0.01	1,694	12	26	37	2.2	SM14-Ex-EX244	
Kirkland_Main-2972	Kirkland_Manholes-2438	209.72	Kirkland_Manholes-2441	205.09	260.5	1.78	8	PVC	0.01	940	18	39	56	6	SM14-Ex-EX244	
Kirkland_Main-2973	Kirkland_Manholes-2439	217.92	Kirkland_Manholes-2438	209.72	117.3	6.99	8	PVC	0.01	1,864	4	9	12	0.7	SM14-Ex-EX284	
Kirkland_Main-2974	Kirkland_Manholes-2440	242.45	Kirkland_Manholes-2439	217.92	136.9	17.92	8	PVC	0.01	2,985	2	4	6	0.2	SM14-Ex-EX284	
Kirkland_Main-2975	Kirkland_Manholes-2441	205.09	Kirkland_Manholes-2442	204.35	67.9	1.09	8	PVC	0.01	736	19	43	62	8.4	SM14-Ex-EX244	
Kirkland_Main-2977	Kirkland_Manholes-2992	396.35	Kirkland_Manholes-2991	395.79	171.2	0.33	8	PVC	0.01	403	4	21	26	6.4		
Kirkland_Main-2978	Kirkland_Manholes-2991	395.79	Kirkland_Manholes-1328	394.1	142.6	1.18	8	PVC	0.01	767	5	26	30	4		
Kirkland_Main-2979	Kirkland_Manholes-2737	259.86	Kirkland_Manholes-2310	256	91.2	4.23	8	PVC	0.01	1,451	6	9	15	1		
Kirkland_Main-2980	Kirkland_Manholes-2442	204.35	Kirkland_Manholes-2443	200	192.1	2.26	8	PVC	0.01	1,061	20	47	67	6.3	SM14-Ex-EX244	
Kirkland_Main-2981	Kirkland_Manholes-2444	199.73	Kirkland_Manholes-2445	191.11	277	3.11	8	PVC	0.01	1,244	26	69	95	7.6	SM14-Ex-EX244	
Kirkland_Main-2982	Kirkland_Manholes-2443	200	Kirkland_Manholes-2444	199.73	20.4	1.32	8	PVC	0.01	810	21	52	72	8.9	SM14-Ex-EX244	
Kirkland_Main-2983	Kirkland_Manholes-2668	18.29	Kirkland_Manholes-2318	17.6	53.6	1.29	8	PVC	0.01	800	2	7	8	1		

2035 (20-year) with Proposed Improvements - Peak Hour Flow - Pipe Capacity Table

Label	Upstream Node	Upstream Invert Elevation (ft)	Downstream Node	Downstream Invert Elevation (ft)	Length (ft)	Slope (%)	Diameter (in)	Material	Manning's n	Design Capacity (gpm)	Domestic Flow (gpm)	I/I Flow (gpm)	Total Flow (gpm)	Percent Full (%)	CIP No.	Notes
Kirkland_Main-2984	Kirkland_Manholes-2320	18	Kirkland_Manholes-2319	17.7	261.8	0.11	21	PVC	0.01	3,129	135	273	408	13		
Kirkland_Main-2985	Kirkland_Manholes-2321	18.2	Kirkland_Manholes-2320	18	193.7	0.1	21	PVC	0.01	2,971	128	215	342	11.5		
Kirkland_Main-2986	Kirkland_Manholes-2303	195.57	Kirkland_Manholes-2302	194.37	30.3	3.96	12	PVC	0.01	4,136	800	1,588	2,389	57.7	SM2	
Kirkland_Main-2987	Kirkland_Manholes-2302	194.37	Kirkland_Manholes-2304	192.91	51.2	2.85	12	PVC	0.01	3,510	801	1,593	2,393	68.2		
Kirkland_Main-2988	Kirkland_Manholes-2285	419.89	Kirkland_Manholes-2284	417.52	64.2	3.69	8	PVC	0.01	1,355	340	730	1,069	78.9	SM14-Ex-EX248	
Kirkland_Main-2989	Kirkland_Manholes-2284	417.52	Kirkland_Manholes-2282	401.71	231.8	6.82	8	PVC	0.01	1,841	340	734	1,075	58.4	SM14-Ex-EX248	
Kirkland_Main-2990	Kirkland_Manholes-2263	374.13	Kirkland_Manholes-2262	311.78	761.4	8.19	8	PVC	0.01	2,018	386	910	1,296	64.2	SM14-Ex-EX248	
Kirkland_Main-2991	Kirkland_Manholes-2669	379.65	Kirkland_Manholes-2290	372.36	83.4	8.74	8	PVC	0.01	2,084	5	4	9	0.5		
Kirkland_Main-2992	Kirkland_Manholes-2290	372.36	Kirkland_Manholes-2291	367.48	64.2	7.6	8	PVC	0.01	1,944	6	9	14	0.7		
Kirkland_Main-2993	Kirkland_Manholes-2291	367.48	Kirkland_Manholes-2292	366.54	71.9	1.31	8	PVC	0.01	806	6	13	19	2.4		
Kirkland_Main-2994	Kirkland_Manholes-2292	366.54	Kirkland_Manholes-2293	362.58	154	2.57	8	PVC	0.01	1,131	7	17	24	2.1		
Kirkland_Main-2995	Kirkland_Manholes-2670	399.73	Kirkland_Manholes-2298	382.52	120.1	14.33	8	PVC	0.01	2,669	4	9	12	0.5		Drop Connection
Kirkland_Main-2997	Kirkland_Manholes-2673	372.3	Kirkland_Manholes-2675	350.82	245.7	8.74	8	PVC	0.01	2,084	2	4	6	0.3	SM14-Ex-EX208	
Kirkland_Main-2998	Kirkland_Manholes-2709	292.14	Kirkland_Manholes-2708	281.32	58.6	18.46	8	PVC	0.01	3,029	3	17	21	0.7		
Kirkland_Main-2999	Kirkland_Manholes-2708	281.32	Kirkland_Manholes-2707	271.62	125.5	7.73	8	PVC	0.01	1,960	4	21	25	1.3		
Kirkland_Main-3000	Kirkland_Manholes-2711	316.09	Kirkland_Manholes-2709	292.14	170	14.09	8	PVC	0.01	2,647	3	9	11	0.4		
Kirkland_Main-3001	Kirkland_Manholes-2707	271.62	Kirkland_Manholes-2704	250.11	214	10.05	8	PVC	0.01	2,235	5	26	30	1.4		
Kirkland_Main-3002	Kirkland_Manholes-2703	250.19	Kirkland_Manholes-2704	250.11	401.9	0.02	8	PVC	0.01	99	6	17	23	23.6		
Kirkland_Main-3003	Kirkland_Manholes-2712	326.54	Kirkland_Manholes-2711	316.09	154.3	6.77	8	PVC	0.01	1,835	2	4	6	0.3		
Kirkland_Main-3005	Kirkland_Manholes-2714	316.79	Kirkland_Manholes-2713	280.32	397.8	9.17	8	PVC	0.01	2,135	3	4	7	0.3	SM14-Ex-EX204	
Kirkland_Main-3006	Kirkland_Manholes-2713	280.32	Kirkland_Manholes-2702	256.62	323.4	7.33	8	PVC	0.01	1,909	6	9	14	0.7	SM14-Ex-EX204	
Kirkland_Main-3008	Kirkland_Manholes-2721	21.2	Kirkland_Manholes-2722	21	44.5	0.45	12	PVC	0.01	1,394	94	43	137	9.8	SM14-Ex-EX289	
Kirkland_Main-3009	Kirkland_Manholes-2724	25.33	Kirkland_Manholes-2723	21.5	122.9	3.12	8	PVC	0.01	1,245	13	6	20	1.6	SM14-Ex-EX288	
Kirkland_Main-3010	Kirkland_Manholes-2723	21.5	Kirkland_Manholes-2722	21	70.9	0.7	8	PVC	0.01	592	16	12	29	4.8	SM14-Ex-EX288	
Kirkland_Main-3011	Kirkland_Manholes-2727	13	Kirkland_Manholes-2726	12.39	121.7	0.5	18	PVC	0.01	4,339	368	601	968	22.3	SM14-Ex-EX289	
Kirkland_Main-3012	Kirkland_Manholes-2729	13.77	Kirkland_Manholes-2727	13	208.7	0.37	18	PVC	0.01	3,723	365	594	959	25.8	SM14-Ex-EX289	
Kirkland_Main-3013	Kirkland_Manholes-2730	14.43	Kirkland_Manholes-2728	13.83	161.6	0.37	18	PVC	0.01	3,734	361	582	943	25.3	SM14-Ex-EX289	
Kirkland_Main-3014	Kirkland_Manholes-2728	13.83	Kirkland_Manholes-2729	13.77	16.5	0.36	18	PVC	0.01	3,696	364	588	952	25.8	SM14-Ex-EX289	
Kirkland_Main-3015	Kirkland_Manholes-2731	15.6	Kirkland_Manholes-2977	14.89	193.8	0.37	18	PVC	0.01	3,709	356	564	919	24.8	SM14-Ex-EX289	
Kirkland_Main-3016	Kirkland_Manholes-2732	15.71	Kirkland_Manholes-2731	15.6	29.6	0.37	18	PVC	0.01	3,738	353	557	910	24.3	SM14-Ex-EX289	
Kirkland_Main-3017	Kirkland_Manholes-2733	16.02	Kirkland_Manholes-2732	15.71	84.3	0.37	18	PVC	0.01	3,716	348	551	899	24.2	SM14-Ex-EX289	
Kirkland_Main-3018	Kirkland_Manholes-2735	16.81	Kirkland_Manholes-2733	16.02	214.5	0.37	18	PVC	0.01	3,719	346	545	891	24	SM14-Ex-EX289	
Kirkland_Main-3019	Kirkland_Manholes-2734	17.15	Kirkland_Manholes-2735	16.81	92.8	0.37	18	PVC	0.01	3,710	343	539	882	23.8	SM14-Ex-EX289	
Kirkland_Main-3020	Kirkland_Manholes-2736	17.76	Kirkland_Manholes-2734	17.15	164.5	0.37	18	PVC	0.01	3,733	342	533	875	23.4	SM14-Ex-EX289	
Kirkland_Main-3021	Kirkland_Manholes-2741	83.04	Kirkland_Manholes-2739	73.09	180.1	5.53	8	PVC	0.01	1,657	10	19	28	1.7		
Kirkland_Main-3022	Kirkland_Manholes-2740	73.45	Kirkland_Manholes-2739	73.09	167.3	0.22	8	PVC	0.01	327	1	6	7	2.2		
Kirkland_Main-3023	Kirkland_Manholes-2739	73.09	Kirkland_Manholes-2203	62.94	47.2	21.5	8	PVC	0.01	3,269	24	56	80	2.4		
Kirkland_Main-3024	Kirkland_Manholes-2744	119.06	Kirkland_Manholes-2739	73.09	200.2	22.96	8	PVC	0.01	3,378	12	25	37	1.1		
Kirkland_Main-3025	Kirkland_Manholes-2745	129.7	Kirkland_Manholes-2744	119.06	80.2	13.27	8	PVC	0.01	2,569	1	6	7	0.3		
Kirkland_Main-3026	Kirkland_Manholes-2746	121.99	Kirkland_Manholes-2744	119.06	88.8	3.3	8	PVC	0.01	1,280	2	12	15	1.1		
Kirkland_Main-3027	Kirkland_Manholes-2747	133.27	Kirkland_Manholes-2746	121.99	59.4	19	8	PVC	0.01	3,073	1	6	7	0.2		
Kirkland_Main-3028	Kirkland_Manholes-2742	91.54	Kirkland_Manholes-2741	83.04	69.2	12.29	8	PVC	0.01	2,471	8	12	21	0.8		
Kirkland_Main-3029	Kirkland_Manholes-2743	92.6	Kirkland_Manholes-2742	91.54	64.4	1.65	8	PVC	0.01	904	7	6	13	1.5		
Kirkland_Main-3030	Kirkland_Manholes-2748	105.07	Kirkland_Manholes-2749	94.38	144.8	7.38	8	PVC	0.01	1,916	1	6	7	0.4		
Kirkland_Main-3031	Kirkland_Manholes-2749	94.38	Kirkland_Manholes-2880	81.72	189.8	6.67	8	PVC	0.01	1,821	31	19	50	2.7		
Kirkland_Main-3032	Kirkland_Manholes-2756	10.03	Kirkland_Manholes-2754	9.95	319.1	0.03	36	PVC	0.01	6,161	783	1,925	3,009	48.8	SM14-Ex-EX10	
Kirkland_Main-3033	Kirkland_Manholes-2757	10.95	Kirkland_Manholes-2756	10.03	146.2	0.63	36	PVC	0.01	30,867	783	1,921	3,005	9.7	SM14-Ex-EX10	
Kirkland_Main-3036	Kirkland_Manholes-2765	13.19	Kirkland_Manholes-2763	13.15	315.8	0.01	36	PVC	0.01	4,380	686	1,617	2,605	59.5	SM14-Ex-EX10	
Kirkland_Main-3037	Kirkland_Manholes-2766	361.12	Kirkland_Manholes-2548	359.75	342.1	0.4	8	PVC	0.01	446	1	4	6	1.2		
Kirkland_Main-3038	Kirkland_Manholes-397	247.33	Kirkland_Manholes-376	239.8	215.8	3.49	8	PVC	0.01	1,317	86	245	331	25.1		
Kirkland_Main-3039	Kirkland_Manholes-2769	260.32	Kirkland_Manholes-1077	252.59	364.2	2.12	8	PVC	0.01	1,027	4	9	12	1.2		
Kirkland_Main-3044	Kirkland_Manholes-2275	411.72	Kirkland_Manholes-2276	410.45	52.8	2.4	8	PVC	0.01	1,093	1	4	6	0.5		
Kirkland_Main-3045	Kirkland_Manholes-2771	320.53	Kirkland_Manholes-2772	308.23	258.2	4.76	8	PVC	0.01	1,539	55	166	220	14.3		
Kirkland_Main-3046	Kirkland_Manholes-2776	334.45	Kirkland_Manholes-2775	332.7	391.2	0.45	8	PVC	0.01	472	55	153	207	44		
Kirkland_Main-3047	Kirkland_Manholes-2775	332.7	Kirkland_Manholes-2774	330.08	382.8	0.68	8	PVC	0.01	583	55	157	212	36.3		
Kirkland_Main-3048	Kirkland_Manholes-2774	330.08	Kirkland_Manholes-2771	320.53	310.5	3.08	8	PVC	0.01	1,237	55	162	216	17.5		
Kirkland_Main-3049	Kirkland_Manholes-2782	326.16	Kirkland_Manholes-2781	293.52	273.1	11.95	8	PVC	0.01	2,438	0	3	3	0.1		
Kirkland_Main-3050	Kirkland_Manholes-2781	293.52	Kirkland_Manholes-2780	291.73	199	0.9	8	PVC	0.01	669	22	5	27	4.1		
Kirkland_Main-3051	Kirkland_Manholes-2780	291.73	Kirkland_Manholes-2779	288.37	73	4.6	8	PVC	0.01	1,512	22	8	30	2		
Kirkland_Main-3052	Kirkland_Manholes-2779	288.37	Kirkland_Manholes-2778	255.64	255.5	12.81	8	PVC	0.01	2,524	22	11	33	1.3		
Kirkland_Main-3053	Kirkland_Manholes-2777	256.44	Kirkland_Manholes-2778	255.64	115.8	0.69	8	PVC	0.01	586	0	3	3	0.5		
Kirkland_Main-3054	Kirkland_Manholes-2785	259.34	Kirkland_Manholes-2786	258.1	92.6	1.34	8	PVC	0.01	816	13	52	64	7.9		

2035 (20-year) with Proposed Improvements - Peak Hour Flow - Pipe Capacity Table

Label	Upstream Node	Upstream Invert Elevation (ft)	Downstream Node	Downstream Invert Elevation (ft)	Length (ft)	Slope (%)	Diameter (in)	Material	Manning's n	Design Capacity (gpm)	Domestic Flow (gpm)	I/I Flow (gpm)	Total Flow (gpm)	Percent Full (%)	CIP No.	Notes
Kirkland_Main-3055	Kirkland_Manholes-2784	262.56	Kirkland_Manholes-2785	259.34	108.2	2.97	8	PVC	0.01	1,216	11	47	59	4.8		
Kirkland_Main-3057	Kirkland_Manholes-2787	252.17	Kirkland_Manholes-2788	251.6	73	0.78	8	PVC	0.01	623	24	94	118	19	SM14-Ex-EX313	
Kirkland_Main-3059	Kirkland_Manholes-2798	192.18	Kirkland_Manholes-2797	190.87	110.6	1.18	8	PVC	0.01	767	2	4	6	0.8	SM14-Ex-EX296	
Kirkland_Main-3060	Kirkland_Manholes-2797	190.87	Kirkland_Manholes-2796	185.45	211.8	2.56	8	PVC	0.01	1,128	7	17	25	2.2	SM14-Ex-EX296	
Kirkland_Main-3061	Kirkland_Manholes-2799	233.81	Kirkland_Manholes-2800	221.07	125.6	10.15	8	PVC	0.01	2,246	2	4	6	0.3	SM14-Ex-EX302	
Kirkland_Main-3062	Kirkland_Manholes-2800	221.07	Kirkland_Manholes-2797	190.87	260	11.62	8	PVC	0.01	2,403	3	9	12	0.5	SM14-Ex-EX302	
Kirkland_Main-3063	Kirkland_Manholes-2802	238.36	O-39	228.33	111.4	9	8	PVC	0.01	2,116	22	22	44	2.1		
Kirkland_Main-3064	Kirkland_Manholes-2810	44.75	Kirkland_Manholes-2809	44.5	62.2	0.4	8	PVC	0.01	446	42	93	135	30.4	SM14-Ex-EX316	Drop Connection
Kirkland_Main-3065	Kirkland_Manholes-2808	55.6	Kirkland_Manholes-2807	47.79	63.2	12.36	8	PVC	0.01	2,479	2	12	15	0.6	SM14-Ex-EX317	
Kirkland_Main-3066	Kirkland_Manholes-2807	47.79	Kirkland_Manholes-2810	44.75	258.6	1.18	8	PVC	0.01	764	16	81	96	12.6	SM14-Ex-EX316	
Kirkland_Main-3067	Kirkland_Manholes-2806	53.14	Kirkland_Manholes-2807	47.79	321.9	1.66	8	PVC	0.01	909	11	62	73	8.1	SM14-Ex-EX316	
Kirkland_Main-3068	Kirkland_Manholes-2805	68.41	Kirkland_Manholes-2806	53.14	319.8	4.78	8	PVC	0.01	1,541	10	56	66	4.3	SM14-Ex-EX316	
Kirkland_Main-3069	Kirkland_Manholes-2811	70.36	Kirkland_Manholes-2808	55.6	132.6	11.13	8	PVC	0.01	2,353	1	6	7	0.3	SM14-Ex-EX317	
Kirkland_Main-3070	Kirkland_Manholes-2814	79.68	Kirkland_Manholes-2805	68.41	70.6	15.96	8	PVC	0.01	2,817	1	6	7	0.3	SM14-Ex-EX318	
Kirkland_Main-3071	Kirkland_Manholes-2815	71.41	Kirkland_Manholes-2805	68.41	115.4	2.6	8	PVC	0.01	1,137	3	19	22	1.9	SM14-Ex-EX318	
Kirkland_Main-3072	Kirkland_Manholes-2812	81.42	Kirkland_Manholes-2815	71.41	284.3	3.52	8	PVC	0.01	1,323	2	12	15	1.1	SM14-Ex-EX318	
Kirkland_Main-3073	Kirkland_Manholes-2813	84.17	Kirkland_Manholes-2812	81.42	272.3	1.01	8	PVC	0.01	709	1	6	7	1	SM14-Ex-EX318	
Kirkland_Main-3074	Kirkland_Manholes-2816	45.4	Kirkland_Manholes-2810	44.75	163.3	0.4	8	PVC	0.01	446	2	6	8	1.9		
Kirkland_Main-3075	Kirkland_Manholes-2822	57.68	Kirkland_Manholes-2821	56.89	105.9	0.75	8	PVC	0.01	609	34	6	40	6.6		
Kirkland_Main-3076	Kirkland_Manholes-2821	56.89	Kirkland_Manholes-2820	55.04	95.1	1.94	8	PVC	0.01	983	36	12	49	4.9		
Kirkland_Main-3077	Kirkland_Manholes-2820	55.04	Kirkland_Manholes-2819	48.42	258.4	2.56	8	PVC	0.01	1,128	40	19	58	5.2		
Kirkland_Main-3078	Kirkland_Manholes-2819	48.42	Kirkland_Manholes-2817	44.74	95	3.87	8	PVC	0.01	1,388	41	25	66	4.7		
Kirkland_Main-3079	Kirkland_Manholes-2818	48.57	Kirkland_Manholes-2817	44.74	127	3.01	8	PVC	0.01	1,224	4	6	10	0.8		
Kirkland_Main-3080	Kirkland_Manholes-2817	44.74	Kirkland_Manholes-2823	34.33	329.7	3.16	8	PVC	0.01	1,253	47	37	84	6.7		
Kirkland_Main-3081	Kirkland_Manholes-2827	39.5	Kirkland_Manholes-2826	38.6	407	0.22	15	PVC	0.01	1,768	241	590	831	47	SM14-Ex-EX319	Drop Connection
Kirkland_Main-3082	Kirkland_Manholes-2826	36.35	Kirkland_Manholes-2823	34.33	324.1	0.62	15	PVC	0.01	2,973	251	596	847	28.5	SM14-Ex-EX319	
Kirkland_Main-3083	Kirkland_Manholes-2823	34.33	Kirkland_Manholes-2824	33.64	78.4	0.88	15	PVC	0.01	3,537	299	640	938	26.5	SM14-Ex-EX319	
Kirkland_Main-3084	Kirkland_Manholes-2824	33.64	Kirkland_Manholes-2825	33	93.6	0.69	15	PVC	0.01	3,124	300	646	946	30.3	SM14-Ex-EX319	
Kirkland_Main-3085	Kirkland_Manholes-2830	52.24	Kirkland_Manholes-2831	43.6	77.9	11.1	8	PVC	0.01	2,349	7	6	85	3.6		
Kirkland_Main-3088	Kirkland_Manholes-2831	43.6	Kirkland_Manholes-2829	40.2	467.6	0.73	12	PVC	0.01	1,772	167	402	640	36.1	SM14-Ex-EX309	
Kirkland_Main-3089	Kirkland_Manholes-2825	33	Kirkland_Manholes-2832	30.86	94.7	2.26	15	PVC	0.01	5,664	301	652	953	16.8	SM14-Ex-EX319	
Kirkland_Main-3090	Kirkland_Manholes-2829	40.2	Kirkland_Manholes-2832	30.86	260.5	3.59	12	PVC	0.01	3,936	167	408	647	16.4	SM14-Ex-EX309	
Kirkland_Main-3091	Kirkland_Manholes-2828	34.38	Kirkland_Manholes-2832	30.86	239.8	1.47	8	PVC	0.01	854	39	6	45	5.3		
Kirkland_Main-3092	Kirkland_Manholes-2832	30.86	Kirkland_Manholes-2833	29.99	303.3	0.29	18	PVC	0.01	3,283	509	1,072	1,652	50.3	SM14-Ex-EX309	
Kirkland_Main-3093	Kirkland_Manholes-2839	98.83	Kirkland_Manholes-2840	90.84	75.4	10.6	8	PVC	0.01	2,295	3	6	9	0.4		
Kirkland_Main-3094	Kirkland_Manholes-2841	31.53	Kirkland_Manholes-2842	26.9	41.3	11.2	8	PVC	0.01	2,360	8	19	27	1.1	SM14-Ex-EX310	
Kirkland_Main-3095	Kirkland_Manholes-2843	16.05	YARROW POINT_WETWELL	6	32.1	31.31	8	PVC	0.01	3,945	13	47	60	1.5	SM14-Ex-EX315	
Kirkland_Main-3096	Kirkland_Manholes-2847	24.39	Kirkland_Manholes-2854	20.28	103.2	3.98	8	PVC	0.01	1,407	0	5	5	0.3	SM14-Ex-EX315	
Kirkland_Main-3097	Kirkland_Manholes-2854	20.28	Kirkland_Manholes-2855	19.82	135	0.34	8	PVC	0.01	411	0	9	9	2.3	SM14-Ex-EX315	
Kirkland_Main-3098	Kirkland_Manholes-2855	19.82	Kirkland_Manholes-2846	17.72	172.2	1.22	8	PVC	0.01	779	0	14	14	1.8	SM14-Ex-EX315	
Kirkland_Main-3099	Kirkland_Manholes-2846	17.72	Kirkland_Manholes-2843	16.05	133.2	1.25	8	PVC	0.01	790	0	19	19	2.4	SM14-Ex-EX315	
Kirkland_Main-3100	Kirkland_Manholes-2845	16.72	Kirkland_Manholes-2843	16.05	68.4	0.97	8	PVC	0.01	696	13	19	32	4.6	SM14-Ex-EX315	
Kirkland_Main-3102	Kirkland_Manholes-2844	27.14	Kirkland_Manholes-2843	26.59	137.5	0.4	8	PVC	0.01	446	0	5	5	1.1	SM14-Ex-EX315	Drop Connection
Kirkland_Main-3104	Kirkland_Manholes-2809	42.91	Kirkland_Manholes-2834	37.62	317.9	1.66	8	PVC	0.01	910	47	99	146	16	SM14-Ex-EX316	
Kirkland_Main-3105	Kirkland_Manholes-2836	60.97	Kirkland_Manholes-2835	50.93	162.4	6.18	8	PVC	0.01	1,753	11	19	29	1.7		
Kirkland_Main-3106	Kirkland_Manholes-2835	50.93	Kirkland_Manholes-2834	37.62	47.5	28.02	8	PVC	0.01	3,732	12	25	36	1		
Kirkland_Main-3108	Kirkland_Manholes-2862	89.88	Kirkland_Manholes-2863	49.4	272.9	14.83	8	PVC	0.01	2,716	8	12	20	0.7		
Kirkland_Main-3109	Kirkland_Manholes-2861	109.7	Kirkland_Manholes-2862	89.88	239.2	8.29	8	PVC	0.01	2,030	5	8	13	0.7		
Kirkland_Main-3110	Kirkland_Manholes-2860	120.82	Kirkland_Manholes-2861	109.7	223.4	4.98	8	PVC	0.01	1,573	2	4	6	0.4		
Kirkland_Main-3115	Kirkland_Manholes-2883	268.55	Kirkland_Manholes-2876	267.92	60.1	1.05	8	PVC	0.01	722	2	9	11	1.5		
Kirkland_Main-3116	Kirkland_Manholes-2884	269.34	Kirkland_Manholes-2883	268.55	63.9	1.24	8	PVC	0.01	784	2	4	6	0.7		
Kirkland_Main-3118	Kirkland_Manholes-2548	359.75	Kirkland_Manholes-2891	359.09	165.1	0.4	8	PVC	0.01	448	12	26	38	8.4		
Kirkland_Main-3119	Kirkland_Manholes-2891	359.09	Kirkland_Manholes-2561	358.82	66.3	0.4	8	PVC	0.01	446	13	30	43	9.6		
Kirkland_Main-3121	Kirkland_Manholes-2893	432.24	Kirkland_Manholes-1991	431.18	280.1	0.38	8	PVC	0.01	434	3	4	7	1.7		
Kirkland_Main-3122	Kirkland_Manholes-2894	306.1	Kirkland_Manholes-2895	306	25.4	0.4	8	PVC	0.01	446	5	17	22	4.9		
Kirkland_Main-3123	Kirkland_Manholes-2895	306	Kirkland_Manholes-2896	304.88	150.3	0.75	8	PVC	0.01	609	5	21	27	4.4		
Kirkland_Main-3124	Kirkland_Manholes-2896	304.88	Kirkland_Manholes-2897	303.8	169.5	0.64	8	PVC	0.01	563	7	26	32	5.7		
Kirkland_Main-3125	Kirkland_Manholes-2898	307.58	Kirkland_Manholes-2897	303.8	40	9.44	8	PVC	0.01	2,166	1	4	6	0.3		
Kirkland_Main-3126	Kirkland_Manholes-2897	303.8	Kirkland_Manholes-2899	303.26	125.6	0.43	8	PVC	0.01	462	9	34	43	9.4		
Kirkland_Main-3127	Kirkland_Manholes-2899	303.26	Kirkland_Manholes-2900	302.3	244.9	0.39	8	PVC	0.01	441	11	39	49	11.2		
Kirkland_Main-3128	Kirkland_Manholes-882	297.25	Kirkland_Manholes-345	279.43	305.8	5.83	8	PVC	0.01	1,702	4	4	9	0.5		
Kirkland_Main-3129	Kirkland_Manholes-2901	294.77	Kirkland_Manholes-883	294.42	87	0.4	8	PVC	0.01	446	3	17	20	4.4		

2035 (20-year) with Proposed Improvements - Peak Hour Flow - Pipe Capacity Table

Label	Upstream Node	Upstream Invert Elevation (ft)	Downstream Node	Downstream Invert Elevation (ft)	Length (ft)	Slope (%)	Diameter (in)	Material	Manning's n	Design Capacity (gpm)	Domestic Flow (gpm)	I/I Flow (gpm)	Total Flow (gpm)	Percent Full (%)	CIP No.	Notes
Kirkland_Main-3130	Kirkland_Manholes-883	294.42	Kirkland_Manholes-906	293.01	64.9	2.17	8	PVC	0.01	1,039	9	39	47	4.6		
Kirkland_Main-3131	Kirkland_Manholes-2902	301.02	Kirkland_Manholes-883	294.42	322.3	2.05	8	PVC	0.01	1,009	6	17	23	2.3		
Kirkland_Main-3132	Kirkland_Manholes-2903	301.35	Kirkland_Manholes-2902	301.02	151.1	0.22	8	PVC	0.01	329	4	13	17	5.2		
Kirkland_Main-3133	Kirkland_Manholes-2905	302.8	Kirkland_Manholes-2904	301.39	65.9	2.14	8	PVC	0.01	1,031	2	4	6	0.6		
Kirkland_Main-3134	Kirkland_Manholes-2904	301.39	Kirkland_Manholes-2903	301.35	153.8	0.03	8	PVC	0.01	114	3	9	11	9.8		
Kirkland_Main-3135	Kirkland_Manholes-2913	474.42	Kirkland_Manholes-1391	471.35	128.8	2.38	8	PVC	0.01	1,088	2	9	11	1		
Kirkland_Main-3136	Kirkland_Manholes-2906	405.37	Kirkland_Manholes-2907	402.62	299.9	0.92	8	PVC	0.01	675	6	39	45	6.7		
Kirkland_Main-3137	Kirkland_Manholes-2907	402.62	Kirkland_Manholes-2908	397.79	295.5	1.63	8	PVC	0.01	901	7	44	51	5.6		
Kirkland_Main-3138	Kirkland_Manholes-2908	397.79	Kirkland_Manholes-2532	395.91	85.9	2.19	8	PVC	0.01	1,043	7	48	55	5.3		
Kirkland_Main-3139	Kirkland_Manholes-2910	412.56	Kirkland_Manholes-2017	412	24.7	2.27	8	PVC	0.01	1,062	9	17	26	2.5		
Kirkland_Main-3140	Kirkland_Manholes-2911	414.42	Kirkland_Manholes-2910	412.56	288.8	0.64	8	PVC	0.01	566	8	13	21	3.6		
Kirkland_Main-3141	Kirkland_Manholes-2909	423.03	Kirkland_Manholes-2912	418.07	296	1.68	8	PVC	0.01	913	2	4	7	0.7		
Kirkland_Main-3142	Kirkland_Manholes-2912	418.07	Kirkland_Manholes-2911	414.42	285.6	1.28	8	PVC	0.01	797	5	9	14	1.7		
Kirkland_Main-3143	Kirkland_Manholes-2914	478.18	Kirkland_Manholes-2913	474.42	305.5	1.23	8	PVC	0.01	782	1	4	6	0.7		
Kirkland_Main-3144	Kirkland_Manholes-2036	452.58	Kirkland_Manholes-1216	443.89	347.4	2.5	8	PVC	0.01	1,115	196	343	540	48.4	SM14-Ex-EX264	
Kirkland_Main-3145	Kirkland_Manholes-1216	443.89	Kirkland_Manholes-2048	442.51	28.4	4.86	8	PVC	0.01	1,554	200	352	552	35.5	SM14-Ex-EX264	
Kirkland_Main-3146	Kirkland_Manholes-1719	46.02	Kirkland_Manholes-2935	44.9	241.2	0.46	8	PVC	0.01	480	84	58	142	29.6	SM14-Ex-EX165	
Kirkland_Main-3147	Kirkland_Manholes-2935	44.9	Kirkland_Manholes-1741	41.4	292.3	1.2	8	PVC	0.01	772	85	66	151	19.6	SM14-Ex-EX165	
Kirkland_Main-3150	Kirkland_Manholes-733	35.72	Kirkland_Manholes-758	27.19	290.4	2.94	18	PVC	0.01	10,503	1,058	1,750	2,809	26.7		
Kirkland_Main-3151	Kirkland_Manholes-758	27.19	Kirkland_Manholes-734	25.7	118.9	1.25	18	PVC	0.01	6,865	1,059	1,758	2,817	41		
Kirkland_Main-3152	Kirkland_Manholes-1689	43.75	Kirkland_Manholes-2927	38.62	107.6	4.77	8	PVC	0.01	1,540	86	103	189	12.3	SM14-Ex-EX161	
Kirkland_Main-3153	Kirkland_Manholes-2927	38.62	Kirkland_Manholes-733	35.72	20.9	13.88	8	PVC	0.01	2,627	87	111	198	7.5		
Kirkland_Main-3154	Kirkland_Manholes-2928	60.36	Kirkland_Manholes-730	57.26	71.9	4.31	18	PVC	0.01	12,722	218	553	772	6.1		
Kirkland_Main-3155	Kirkland_Manholes-1372	427.9	Kirkland_Manholes-2936	415.17	236.6	5.38	8	PVC	0.01	1,635	78	155	233	14.2	SM14-Ex-EX218	
Kirkland_Main-3156	Kirkland_Manholes-2936	415.17	Kirkland_Manholes-1351	415.08	21.5	0.4	8	PVC	0.01	446	90	185	275	61.7		Drop Connection
Kirkland_Main-3157	Kirkland_Manholes-2937	243.36	Kirkland_Manholes-2938	237.72	156	3.61	8	PVC	0.01	1,340	3	4	8	0.6		
Kirkland_Main-3158	Kirkland_Manholes-2938	237.72	Kirkland_Manholes-1313	237.26	115.6	0.4	8	PVC	0.01	446	5	9	13	3		Drop Connection
Kirkland_Main-3159	Kirkland_Manholes-2939	317.33	Kirkland_Manholes-2887	302.33	186.7	8.03	8	PVC	0.01	1,999	7	13	19	1		
Kirkland_Main-3161	Kirkland_Manholes-2940	472.26	Kirkland_Manholes-564	469.28	203.6	1.46	8	PVC	0.01	853	1	4	5	0.6		
Kirkland_Main-3162	Kirkland_Manholes-2943	249.65	Kirkland_Manholes-1876	247.77	195.1	0.96	8	PVC	0.01	692	1	9	9	1.3		
Kirkland_Main-3163	Kirkland_Manholes-2947	393.38	Kirkland_Manholes-2946	380.26	237.2	5.53	8	PVC	0.01	1,658	2	4	6	0.4		
Kirkland_Main-3164	Kirkland_Manholes-2946	380.26	Kirkland_Manholes-2945	367.86	240.8	5.15	8	PVC	0.01	1,600	9	21	31	1.9		
Kirkland_Main-3165	Kirkland_Manholes-2945	367.86	Kirkland_Manholes-2948	345.5	368	6.08	8	PVC	0.01	1,738	10	26	36	2		
Kirkland_Main-3166	Kirkland_Manholes-2948	345.5	Kirkland_Manholes-1933	343.68	135.8	1.34	8	PVC	0.01	816	10	30	40	4.9		
Kirkland_Main-3167	Kirkland_Manholes-2171	166.42	Kirkland_Manholes-1107	164.79	299.5	0.54	8	PVC	0.01	520	0	4	5	0.9	SM14-Ex-EX21	
Kirkland_Main-3168	Kirkland_Manholes-2942	127.29	Kirkland_Manholes-2941	110.18	161.6	10.59	8	PVC	0.01	2,294	4	4	8	0.3		
Kirkland_Main-3169	Kirkland_Manholes-80	110.33	Kirkland_Manholes-2941	110.18	10	1.51	8	PVC	0.01	866	3	4	8	0.9		
Kirkland_Main-3170	Kirkland_Manholes-2941	110.18	Kirkland_Manholes-144	88.96	389.8	5.44	8	PVC	0.01	1,645	7	13	21	1.2		
Kirkland_Main-3171	Kirkland_Manholes-2949	387.42	Kirkland_Manholes-2946	380.26	393.8	1.82	8	PVC	0.01	951	5	13	18	1.9		
Kirkland_Main-3172	Kirkland_Manholes-2950	396.31	Kirkland_Manholes-2949	387.42	98.6	9.02	8	PVC	0.01	2,117	4	9	13	0.6		
Kirkland_Main-3173	Kirkland_Manholes-2951	398.98	Kirkland_Manholes-2950	396.31	142	1.88	8	PVC	0.01	967	2	4	6	0.7		
Kirkland_Main-3174	Kirkland_Manholes-2952	137.34	Kirkland_Manholes-2509	126.48	113.7	9.55	8	PVC	0.01	2,179	3	6	9	0.4		
Kirkland_Main-3175	Kirkland_Manholes-1035	182.7	Kirkland_Manholes-2955	181.46	188.6	0.66	8	PVC	0.01	572	23	54	77	13.4		
Kirkland_Main-3176	Kirkland_Manholes-2955	181.46	Kirkland_Manholes-1038	180.54	146.6	0.63	8	PVC	0.01	559	28	67	95	17.1		
Kirkland_Main-3177	Kirkland_Manholes-2954	183.8	Kirkland_Manholes-2953	182.9	158.6	0.57	8	PVC	0.01	531	2	4	6	1.2		
Kirkland_Main-3178	Kirkland_Manholes-2953	182.9	Kirkland_Manholes-2955	181.46	297.7	0.48	8	PVC	0.01	490	4	9	13	2.6		
Kirkland_Main-3179	Kirkland_Manholes-2956	306.62	Kirkland_Manholes-876	301.25	262.2	2.05	8	PVC	0.01	1,009	6	17	23	2.3		
Kirkland_Main-3180	Kirkland_Manholes-2958	17.19	WAVERLY_WETWELL	0	45.5	37.82	12	PVC	0.01	12,784	48	283	331	2.6		WW Influent Pipe
Kirkland_Main-3181	Kirkland_Manholes-1622	253.11	Kirkland_Manholes-528	238.38	149.4	9.86	12	PVC	0.01	6,527	361	901	1,263	19.3	SM7	
Kirkland_Main-3182	Kirkland_Manholes-528	238.38	Kirkland_Manholes-1634	223.49	152.1	9.79	12	PVC	0.01	6,504	364	906	1,270	19.5	SM7	
Kirkland_Main-3183	Kirkland_Manholes-2971	508.46	Kirkland_Manholes-2972	508.32	249.3	0.06	8	PVC	0.01	167	0	4	5	2.8		
Kirkland_Main-3185	Kirkland_Manholes-2960	235.09	Kirkland_Manholes-334	218.68	321.1	5.11	8	PVC	0.01	1,594	3	4	7	0.5		
Kirkland_Main-3186	Kirkland_Manholes-2961	466.63	Kirkland_Manholes-2030	465.11	267.6	0.57	8	PVC	0.01	531	2	4	6	1.2		
Kirkland_Main-3187	Kirkland_Manholes-2963	352.22	Kirkland_Manholes-2962	351.81	165.5	0.25	8	PVC	0.01	351	2	4	6	1.7		
Kirkland_Main-3188	Kirkland_Manholes-2962	351.81	Kirkland_Manholes-2566	326.34	167.8	15.18	8	PVC	0.01	2,747	6	21	28	1		
Kirkland_Main-3189	Kirkland_Manholes-2966	369.29	Kirkland_Manholes-2965	368.34	79.6	1.19	8	PVC	0.01	770	11	4	16	2		
Kirkland_Main-3190	Kirkland_Manholes-2965	368.34	Kirkland_Manholes-2964	368.18	12	1.33	8	PVC	0.01	814	17	9	26	3.1		
Kirkland_Main-3191	Kirkland_Manholes-2964	368.18	Kirkland_Manholes-1916	361.73	249.5	2.59	8	PVC	0.01	1,134	18	13	31	2.7		
Kirkland_Main-3193	Kirkland_Manholes-2967	87.15	Kirkland_Manholes-2969	78.32	80.7	10.94	8	PVC	0.01	2,332	1	4	6	0.2		
Kirkland_Main-3194	Kirkland_Manholes-2968	78.98	Kirkland_Manholes-2969	78.32	100.1	0.66	8	PVC	0.01	573	2	4	6	1.1		
Kirkland_Main-3195	Kirkland_Manholes-2969	78.32	Kirkland_Manholes-2970	61.2	152.9	11.2	8	PVC	0.01	2,359	4	13	18	0.7		
Kirkland_Main-3196	Kirkland_Manholes-2970	61.2	Kirkland_Manholes-200	55.31	178.6	3.3	8	PVC	0.01	1,280	5	18	23	1.8		

2035 (20-year) with Proposed Improvements - Peak Hour Flow - Pipe Capacity Table

Label	Upstream Node	Upstream Invert Elevation (ft)	Downstream Node	Downstream Invert Elevation (ft)	Length (ft)	Slope (%)	Diameter (in)	Material	Manning's n	Design Capacity (gpm)	Domestic Flow (gpm)	I/I Flow (gpm)	Total Flow (gpm)	Percent Full (%)	CIP No.	Notes
Kirkland_Main-3197	Kirkland_Manholes-1445	504.92	Kirkland_Manholes-2976	503.85	186.4	0.57	8	PVC	0.01	534	30	99	129	24.1	SM14-Ex-EX269	
Kirkland_Main-3198	Kirkland_Manholes-2972	508.32	Kirkland_Manholes-2973	507.01	144.1	0.91	8	PVC	0.01	672	1	9	9	1.4		
Kirkland_Main-3199	Kirkland_Manholes-2974	507.07	Kirkland_Manholes-2973	507.01	168.1	0.04	8	PVC	0.01	133	0	4	5	3.5		
Kirkland_Main-3200	Kirkland_Manholes-2973	507.01	Kirkland_Manholes-2975	506.8	151.1	0.14	8	PVC	0.01	263	3	17	20	7.7		
Kirkland_Main-3201	Kirkland_Manholes-2975	506.8	Kirkland_Manholes-2976	503.85	22	13.39	8	PVC	0.01	2,579	3	21	25	1		
Kirkland_Main-3202	Kirkland_Manholes-2978	14.63	Kirkland_Manholes-2730	14.43	56	0.36	18	PVC	0.01	3,662	359	576	935	25.5	SM14-Ex-EX289	
Kirkland_Main-3203	Kirkland_Manholes-2977	14.89	Kirkland_Manholes-2978	14.63	69.2	0.38	18	PVC	0.01	3,758	358	570	927	24.7	SM14-Ex-EX289	
Kirkland_Main-3204	Kirkland_Manholes-2979	372.62	Kirkland_Manholes-2980	359.59	69.3	18.82	8	PVC	0.01	3,058	2	4	6	0.2		
Kirkland_Main-3205	Kirkland_Manholes-2980	359.59	Kirkland_Manholes-2981	355.43	97.4	4.27	8	PVC	0.01	1,457	3	9	12	0.8		
Kirkland_Main-3206	Kirkland_Manholes-2981	355.43	Kirkland_Manholes-2962	351.81	43.7	8.28	8	PVC	0.01	2,029	4	13	17	0.8		
Kirkland_Main-3207	Kirkland_Manholes-2982	168	Kirkland_Manholes-770	166.93	80.1	1.34	8	PVC	0.01	815	1	4	5	0.6		
Kirkland_Main-3208	Kirkland_Manholes-2983	235.2	Kirkland_Manholes-974	234.1	148.8	0.74	8	PVC	0.01	606	2	4	6	1		
Kirkland_Main-3209	Kirkland_Manholes-1342	283.15	Kirkland_Manholes-2984	277.63	191.2	2.89	10	PVC	0.01	2,172	167	399	566	26.1		
Kirkland_Main-3210	Kirkland_Manholes-2985	155.7	Kirkland_Manholes-1648	152.03	36.5	10.07	8	PVC	0.01	2,237	5	17	21	0.9		
Kirkland_Main-3211	Kirkland_Manholes-2986	155.86	Kirkland_Manholes-2985	155.7	122.4	0.13	8	PVC	0.01	255	4	8	12	4.7		
Kirkland_Main-3213	Kirkland_Manholes-2987	213	Kirkland_Manholes-2988	212.12	123.5	0.71	8	PVC	0.01	595	4	4	9	1.4		
Kirkland_Main-3214	Kirkland_Manholes-2988	212.12	Kirkland_Manholes-2989	210.69	118.1	1.21	8	PVC	0.01	776	6	9	15	1.9		
Kirkland_Main-3215	Kirkland_Manholes-2989	210.69	Kirkland_Manholes-61	205.17	54.3	10.16	8	PVC	0.01	2,247	6	13	20	0.9		
Kirkland_Main-3216	Kirkland_Manholes-2990	239.73	Kirkland_Manholes-1021	230.72	366.4	2.46	8	PVC	0.01	1,106	3	4	7	0.7		
Kirkland_Main-3217	Kirkland_Manholes-2993	335.98	Kirkland_Manholes-2939	317.33	213.5	8.74	8	PVC	0.01	2,084	5	9	14	0.6		
Kirkland_Main-3218	Kirkland_Manholes-1083	220.88	Kirkland_Manholes-2996	220.63	31.5	0.79	12	PVC	0.01	1,851	194	541	911	49.2	SM14-Ex-EX321	
Kirkland_Main-3219	Kirkland_Manholes-2995	224.98	Kirkland_Manholes-2996	220.63	134.4	3.24	8	PVC	0.01	1,269	11	4	15	1.2		
Kirkland_Main-3220	Kirkland_Manholes-2997	482.7	Kirkland_Manholes-2998	482.02	242.2	0.28	8	PVC	0.01	374	1	4	6	1.5		
Kirkland_Main-3221	Kirkland_Manholes-2998	482.02	Kirkland_Manholes-555	477.96	81.6	4.97	8	PVC	0.01	1,572	3	9	11	0.7		
Kirkland_Main-3222	Kirkland_Manholes-2999	479.74	Kirkland_Manholes-3000	475.69	102.7	3.94	8	PVC	0.01	1,400	1	4	5	0.4		
Kirkland_Main-3223	Kirkland_Manholes-3000	475.69	Kirkland_Manholes-3001	471.99	137.1	2.7	8	PVC	0.01	1,158	2	9	11	0.9		
Kirkland_Main-3224	Kirkland_Manholes-3001	471.99	Kirkland_Manholes-3002	466.73	134.5	3.91	8	PVC	0.01	1,394	3	13	16	1.1		
Kirkland_Main-3225	Kirkland_Manholes-3002	466.73	Kirkland_Manholes-3003	466.06	37	1.81	8	PVC	0.01	949	4	17	21	2.2		
Kirkland_Main-3226	Kirkland_Manholes-3003	466.06	Kirkland_Manholes-3004	465.24	79.1	1.04	8	PVC	0.01	718	4	21	25	3.6		
Kirkland_Main-3227	Kirkland_Manholes-3004	465.24	Kirkland_Manholes-3005	459.83	119.2	4.54	8	PVC	0.01	1,502	5	26	31	2.1		
Kirkland_Main-3228	Kirkland_Manholes-3005	459.83	Kirkland_Manholes-3006	456.1	91.8	4.07	8	PVC	0.01	1,422	6	30	36	2.5		
Kirkland_Main-3229	Kirkland_Manholes-3007	456.9	Kirkland_Manholes-3008	447.1	310.3	3.16	8	PVC	0.01	1,253	4	9	12	1		
Kirkland_Main-3230	Kirkland_Manholes-3009	452.69	Kirkland_Manholes-3008	447.1	238.1	2.35	8	PVC	0.01	1,080	1	4	6	0.5		
Kirkland_Main-3231	Kirkland_Manholes-3008	447.1	Kirkland_Manholes-1990	439.8	282	2.59	8	PVC	0.01	1,134	7	17	24	2.1		
Kirkland_Main-3232	Kirkland_Manholes-3010	442.64	Kirkland_Manholes-3011	434.12	219.9	3.87	8	PVC	0.01	1,388	1	4	5	0.4		
Kirkland_Main-3233	Kirkland_Manholes-3011	434.12	Kirkland_Manholes-2005	431.24	367.7	0.78	8	PVC	0.01	624	2	9	11	1.8		
Kirkland_Main-3234	Kirkland_Manholes-2005	431.24	Kirkland_Manholes-2006	430.4	270.9	0.31	8	PVC	0.01	393	3	13	16	4.2		
Kirkland_Main-3235	Kirkland_Manholes-2006	430.4	Kirkland_Manholes-2007	429.08	284.1	0.46	8	PVC	0.01	481	6	17	23	4.8		
Kirkland_Main-3236	Kirkland_Manholes-3012	424.86	Kirkland_Manholes-2011	417.75	388.4	1.83	8	PVC	0.01	954	2	4	6	0.6		
Kirkland_Main-3237	Kirkland_Manholes-3014	470	Kirkland_Manholes-3013	459.93	193.2	5.21	8	PVC	0.01	1,610	1	4	6	0.4		
Kirkland_Main-3238	Kirkland_Manholes-3013	459.93	Kirkland_Manholes-548	453.36	230.6	2.85	8	PVC	0.01	1,190	3	9	12	1		
Kirkland_Main-3239	Kirkland_Manholes-3020	302.86	Kirkland_Manholes-1341	299.38	98.7	3.52	8	PVC	0.01	1,324	12	52	64	4.8		
Kirkland_Main-3240	Kirkland_Manholes-3019	303.35	Kirkland_Manholes-3020	302.86	19.4	2.52	8	PVC	0.01	1,119	12	47	59	5.3		
Kirkland_Main-3241	Kirkland_Manholes-3021	303.74	Kirkland_Manholes-3019	303.35	54.4	0.72	8	PVC	0.01	597	12	43	54	9.1		
Kirkland_Main-3242	Kirkland_Manholes-3022	311.69	Kirkland_Manholes-3021	303.74	55.5	14.32	8	PVC	0.01	2,668	1	4	5	0.2		
Kirkland_Main-3243	Kirkland_Manholes-3023	312.84	Kirkland_Manholes-3021	303.74	71.1	12.8	8	PVC	0.01	2,523	10	34	45	1.8		
Kirkland_Main-3244	Kirkland_Manholes-3018	329.19	Kirkland_Manholes-3023	312.84	105.9	15.45	8	PVC	0.01	2,771	10	30	40	1.4		
Kirkland_Main-3245	Kirkland_Manholes-3017	343.42	Kirkland_Manholes-3018	329.19	180.7	7.87	8	PVC	0.01	1,978	9	26	35	1.7		
Kirkland_Main-3246	Kirkland_Manholes-3015	371.23	Kirkland_Manholes-3017	343.42	160.4	17.33	8	PVC	0.01	2,935	7	21	29	1		
Kirkland_Main-3247	Kirkland_Manholes-3016	372.66	Kirkland_Manholes-3015	371.23	122.5	1.17	8	PVC	0.01	762	6	17	23	3		
Kirkland_Main-3248	Kirkland_Manholes-3024	372.77	Kirkland_Manholes-1930	369.31	206.2	1.68	8	PVC	0.01	913	2	4	6	0.7		
Kirkland_Main-3250	Kirkland_Manholes-3025	189.5	Kirkland_Manholes-3026	186.45	198.2	1.54	8	PVC	0.01	875	2	4	6	0.7		
Kirkland_Main-3251	Kirkland_Manholes-3026	186.45	Kirkland_Manholes-1035	182.7	331	1.13	8	PVC	0.01	750	3	9	12	1.6		
Kirkland_Main-3252	Kirkland_Manholes-3028	332.75	Kirkland_Manholes-1582	332.21	111.6	0.48	12	PVC	0.01	1,446	66	193	259	17.9	SM14-Ex-EX206	
Kirkland_Main-3253	Kirkland_Manholes-3027	333.49	Kirkland_Manholes-3028	332.75	24.2	3.06	8	PVC	0.01	1,233	4	4	8	0.7		
Kirkland_Main-3257	Kirkland_Manholes-3031	384.74	Kirkland_Manholes-1926	383.42	23.1	5.72	12	PVC	0.01	4,970	224	567	791	15.9		
Kirkland_Main-3258	Kirkland_Manholes-1	73.25	Kirkland_Manholes-21	62.08	92.5	12.08	8	PVC	0.01	2,451	10	22	32	1.3		
Kirkland_Main-3259	Kirkland_Manholes-20	65.72	Kirkland_Manholes-21	62.08	153.9	2.36	8	PVC	0.01	1,084	0	4	5	0.4		
Kirkland_Main-3260	Kirkland_Manholes-3070	330.73	Kirkland_Manholes-927	307.71	144.8	15.9	8	PVC	0.01	2,811	7	4	11	0.4		
Kirkland_Main-3261	Kirkland_Manholes-3078	370.92	Kirkland_Manholes-3077	366.14	136.6	3.5	8	PVC	0.01	1,319	1	4	5	0.4		
Kirkland_Main-3262	Kirkland_Manholes-3077	366.14	Kirkland_Manholes-3076	363.7	26.9	9.07	8	PVC	0.01	2,124	2	9	10	0.5		
Kirkland_Main-3263	Kirkland_Manholes-3076	363.7	Kirkland_Manholes-3075	343.97	114.4	17.24	8	PVC	0.01	2,928	2	13	15	0.5		

2035 (20-year) with Proposed Improvements - Peak Hour Flow - Pipe Capacity Table

Label	Upstream Node	Upstream Invert Elevation (ft)	Downstream Node	Downstream Invert Elevation (ft)	Length (ft)	Slope (%)	Diameter (in)	Material	Manning's n	Design Capacity (gpm)	Domestic Flow (gpm)	I/I Flow (gpm)	Total Flow (gpm)	Percent Full (%)	CIP No.	Notes
Kirkland_Main-3264	Kirkland_Manholes-3075	343.97	Kirkland_Manholes-3079	316.42	161.6	17.05	8	PVC	0.01	2,911	3	17	20	0.7		
Kirkland_Main-3265	Kirkland_Manholes-3079	316.42	Kirkland_Manholes-3074	303.68	195.1	6.53	8	PVC	0.01	1,802	4	21	25	1.4		
Kirkland_Main-3266	Kirkland_Manholes-3074	303.68	Kirkland_Manholes-3073	289.21	131.6	10.99	8	PVC	0.01	2,337	4	26	30	1.3		
Kirkland_Main-3267	Kirkland_Manholes-3073	289.21	Kirkland_Manholes-3072	273.11	354	4.55	8	PVC	0.01	1,504	5	30	35	2.3		
Kirkland_Main-3268	Kirkland_Manholes-3072	273.11	Kirkland_Manholes-3071	273.04	17.1	0.4	8	PVC	0.01	445	5	34	40	8.9		
Kirkland_Main-3269	Kirkland_Manholes-3071	273.04	Kirkland_Manholes-1317	271.64	20.2	6.94	8	PVC	0.01	1,858	6	39	44	2.4		
Kirkland_Main-3270	Kirkland_Manholes-3081	373.55	Kirkland_Manholes-1319	372.4	30.4	3.78	8	PVC	0.01	1,371	99	202	301	21.9		
Kirkland_Main-3271	Kirkland_Manholes-3080	382.34	Kirkland_Manholes-3081	377.27	187.3	2.71	8	PVC	0.01	1,160	0	4	5	0.4		Drop Connection
Kirkland_Main-3272	Kirkland_Manholes-3083	435.32	Kirkland_Manholes-3082	428.49	311.8	2.19	8	PVC	0.01	1,044	2	4	7	0.6		
Kirkland_Main-3273	Kirkland_Manholes-3084	333.87	Kirkland_Manholes-3085	329.83	142	2.85	8	PVC	0.01	1,189	0	4	5	0.4		
Kirkland_Main-3274	Kirkland_Manholes-3085	329.83	Kirkland_Manholes-3086	304.85	242	10.32	12	PVC	0.01	6,678	1	9	10	0.1		
Kirkland_Main-3275	Kirkland_Manholes-3086	304.85	Kirkland_Manholes-3087	296.66	149.5	5.48	12	PVC	0.01	4,865	5	13	18	0.4		
Kirkland_Main-3276	Kirkland_Manholes-3087	296.66	Kirkland_Manholes-3088	288.51	213.4	3.82	8	Concrete	0.013	1,060	5	17	22	2.1		
Kirkland_Main-3277	Kirkland_Manholes-3088	288.51	Kirkland_Manholes-3089	268.55	207	9.64	8	Concrete	0.013	1,684	5	21	27	1.6		
Kirkland_Main-3278	Kirkland_Manholes-3089	268.55	Kirkland_Manholes-2427	267.5	263	0.4	8	Concrete	0.013	343	59	26	85	24.8		
Kirkland_Main-3279	Kirkland_Manholes-2197	480.89	Kirkland_Manholes-1417	477.64	213.1	1.52	8	PVC	0.01	871	4	13	17	1.9		
Kirkland_Main-3280	Kirkland_Manholes-3090	416.74	Kirkland_Manholes-2916	416.17	246	0.23	8	PVC	0.01	339	2	4	6	1.8		
Kirkland_Main-3281	Kirkland_Manholes-3092	96.93	Kirkland_Manholes-173	34.1	219.6	28.61	8	PVC	0.01	3,771	3	9	12	0.3		
Kirkland_Main-3282	Kirkland_Manholes-3091	115.12	Kirkland_Manholes-3092	96.93	129.4	14.06	8	PVC	0.01	2,644	2	4	6	0.2		
Kirkland_Main-3283	Kirkland_Manholes-3093	117.97	Kirkland_Manholes-3094	63.71	388.1	13.98	8	PVC	0.01	2,636	2	4	7	0.3		
Kirkland_Main-3284	Kirkland_Manholes-3094	63.71	Kirkland_Manholes-437	58.56	159.5	3.23	8	PVC	0.01	1,267	5	9	14	1.1		
Kirkland_Main-3285	Kirkland_Manholes-3095	195.85	Kirkland_Manholes-2070	185.96	195.6	5.06	8	PVC	0.01	1,585	2	4	6	0.4		
Kirkland_Main-3287	Kirkland_Manholes-205	228.15	Kirkland_Manholes-3096	204.91	232.4	10	8	PVC	0.01	2,229	19	36	54	2.4	SM14-Ex-EX57	
Kirkland_Main-3288	Kirkland_Manholes-3096	204.91	Kirkland_Manholes-234	184.45	273.4	7.48	8	PVC	0.01	1,929	25	49	75	3.9	SM14-Ex-EX57	
Kirkland_Main-3289	Kirkland_Manholes-1218	220.85	Kirkland_Manholes-3096	204.91	278.6	5.72	8	PVC	0.01	1,686	5	9	14	0.8	SM14-Ex-EX59	
Kirkland_Main-3290	Kirkland_Manholes-3097	172.14	Kirkland_Manholes-1639	169.94	87.4	2.52	8	PVC	0.01	1,119	23	90	114	10.2	SM14-Ex-EX202	
Kirkland_Main-3291	Kirkland_Manholes-3098	172.34	Kirkland_Manholes-3097	172.14	17.4	1.15	8	PVC	0.01	757	23	86	108	14.3	SM14-Ex-EX202	
Kirkland_Main-3292	Kirkland_Manholes-1640	188.59	Kirkland_Manholes-3098	174.29	160.1	8.93	8	PVC	0.01	2,107	4	9	13	0.6	SM14-Ex-EX203	Drop Connection
Kirkland_Main-3293	Kirkland_Manholes-2696	172.94	Kirkland_Manholes-3098	172.34	33	1.82	8	PVC	0.01	951	18	73	91	9.5	SM14-Ex-EX202	
Kirkland_Main-3294	Kirkland_Manholes-3099	77.83	Kirkland_Manholes-2204	53	99.4	24.97	8	PVC	0.01	3,523	5	12	18	0.5		
Kirkland_Main-3295	Kirkland_Manholes-2725	97.33	Kirkland_Manholes-3099	77.83	158.8	12.28	8	PVC	0.01	2,470	3	6	9	0.4		
Kirkland_Main-3296	Kirkland_Manholes-2663	50.64	Kirkland_Manholes-3043	37.72	98.7	13.08	12	PVC	0.01	7,519	222	446	668	8.9		
Kirkland_Main-3297	Kirkland_Manholes-3043	37.72	Kirkland_Manholes-3044	18.06	181	10.86	12	PVC	0.01	6,850	223	452	675	9.9		
Kirkland_Main-3298	Kirkland_Manholes-3106	117	Kirkland_Manholes-3105	116.05	61.3	1.55	8	PVC	0.01	877	23	91	114	13	SM10	
Kirkland_Main-3299	Kirkland_Manholes-3107	127.14	Kirkland_Manholes-3106	117	167.2	6.07	8		0.012	1,447	22	83	104	7.2	SM10	
Kirkland_Main-3300	Kirkland_Manholes-1180	118.31	Kirkland_Manholes-3108	104.6	196.1	6.99	8	PVC	0.01	1,864	2	8	10	0.5	SM10	
Kirkland_Main-3301	Kirkland_Manholes-3103	113.84	Kirkland_Manholes-3109	110.43	345.5	0.99	12	PVC	0.01	2,065	29	124	153	7.4	SM10	
Kirkland_Main-3302	Kirkland_Manholes-3109	110.43	Kirkland_Manholes-3108	104.6	85.9	6.79	8	PVC	0.01	1,837	31	132	163	8.9	SM10	
Kirkland_Main-3303	Kirkland_Manholes-3108	104.6	Kirkland_Manholes-513	81.7	198.3	11.55	8	PVC	0.01	2,396	33	149	182	7.6	SM10	
Kirkland_Main-3305	Kirkland_Manholes-3105	116.05	Kirkland_Manholes-3104	114.41	128.6	1.28	8	PVC	0.01	796	25	99	124	15.6	SM10	
Kirkland_Main-3306	Kirkland_Manholes-3110	73.01	Kirkland_Manholes-306	19.99	234	22.66	8	PVC	0.01	3,356	27	106	133	4	SM10	
Kirkland_Main-3307	Kirkland_Manholes-305	74.69	Kirkland_Manholes-3110	73.01	8.3	20.21	8	PVC	0.01	3,169	26	97	123	3.9	SM10	
Kirkland_Main-3308	Kirkland_Manholes-3114	174.9	Kirkland_Manholes-3113	173.48	159.7	0.89	8	PVC	0.01	665	36	4	41	6.1		
Kirkland_Main-3309	Kirkland_Manholes-3113	173.48	Kirkland_Manholes-3112	173.15	82.5	0.4	8	PVC	0.01	446	37	9	45	10.2		
Kirkland_Main-3310	Kirkland_Manholes-3112	173.15	Kirkland_Manholes-3111	170.05	248.7	1.25	8	PVC	0.01	787	37	13	50	6.4		
Kirkland_Main-3311	Kirkland_Manholes-3111	170.05	Kirkland_Manholes-1125	167.88	64.7	3.36	8	PVC	0.01	1,292	37	17	55	4.2		
Kirkland_Main-3314	Kirkland_Manholes-3116	330.46	Kirkland_Manholes-2933	328.79	108.5	1.54	8	PVC	0.01	875	2	4	6	0.7		
Kirkland_Main-3315	Kirkland_Manholes-3117	134.38	Kirkland_Manholes-161	132.09	173.7	1.32	8	PVC	0.01	809	4	4	8	1		
Kirkland_Main-3316	Kirkland_Manholes-3118	331.75	Kirkland_Manholes-2934	330.48	196.7	0.65	8	PVC	0.01	567	1	4	6	1		
Kirkland_Main-3317	Kirkland_Manholes-3119	327.7	Kirkland_Manholes-2932	327.56	161.9	0.09	8	PVC	0.01	207	7	21	28	13.6		
Kirkland_Main-3318	Kirkland_Manholes-2933	328.79	Kirkland_Manholes-3119	327.7	135.5	0.8	8	PVC	0.01	632	3	9	12	1.9		
Kirkland_Main-3319	Kirkland_Manholes-2934	330.48	Kirkland_Manholes-3119	327.7	250.4	1.11	8	PVC	0.01	743	3	9	11	1.5		
Kirkland_Main-3320	Kirkland_Manholes-839	334.68	Kirkland_Manholes-3121	329.59	187.8	2.71	8	PVC	0.01	1,161	20	43	63	5.4		
Kirkland_Main-3321	Kirkland_Manholes-3120	345	Kirkland_Manholes-3121	344.79	53.6	0.4	8	PVC	0.01	446	2	4	6	1.4		Drop Connection
Kirkland_Main-3322	Kirkland_Manholes-3121	329.59	Kirkland_Manholes-3122	329.14	65.3	0.69	8	PVC	0.01	585	22	52	74	12.6		
Kirkland_Main-3323	Kirkland_Manholes-3122	329.14	Kirkland_Manholes-840	326.85	337.3	0.68	8	PVC	0.01	581	25	56	81	13.9		
Kirkland_Main-3326	Kirkland_Manholes-3123	227.69	Kirkland_Manholes-2497	194.88	329.5	9.96	8	PVC	0.01	2,225	8	4	12	0.6	SM14-Ex-EX236	
Kirkland_Main-3332	Kirkland_Manholes-3125	215.03	Kirkland_Manholes-3124	203.5	175.2	6.58	8	PVC	0.01	1,809	1	4	6	0.3	SM14-Ex-EX20	
Kirkland_Main-3333	Kirkland_Manholes-3124	203.5	Kirkland_Manholes-3126	177.5	261.8	9.93	8	PVC	0.01	2,222	2	9	11	0.5	SM14-Ex-EX20	
Kirkland_Main-3336	Kirkland_Manholes-3006	456.1	Kirkland_Manholes-539	454.38	165.4	1.04	8	PVC	0.01	719	7	34	41	5.7		
Kirkland_Main-3337	Kirkland_Manholes-555	477.96	Kirkland_Manholes-535	472.49	159.7	3.43	8	PVC	0.01	1,305	4	13	17	1.3		
Kirkland_Main-3338	Kirkland_Manholes-2509	126.48	Kirkland_Manholes-2508	120.01	60.3	10.73	8	PVC	0.01	2,309	5	12	17	0.8	SM14-Ex-EX229	

2035 (20-year) with Proposed Improvements - Peak Hour Flow - Pipe Capacity Table

Label	Upstream Node	Upstream Invert Elevation (ft)	Downstream Node	Downstream Invert Elevation (ft)	Length (ft)	Slope (%)	Diameter (in)	Material	Manning's n	Design Capacity (gpm)	Domestic Flow (gpm)	I/I Flow (gpm)	Total Flow (gpm)	Percent Full (%)	CIP No.	Notes
Kirkland_Main-3339	Kirkland_Manholes-2566	326.34	Kirkland_Manholes-2567	316.05	133.4	7.71	8	PVC	0.01	1,958	7	26	33	1.7	SM14-Ex-EX307	
Kirkland_Main-3340	Kirkland_Manholes-728	70.86	Kirkland_Manholes-2928	60.36	293.8	3.57	18	PVC	0.01	11,586	186	545	731	6.3		
Kirkland_Main-3341	Kirkland_Manholes-3127	324.33	Kirkland_Manholes-3128	323.94	81.4	0.48	8	PVC	0.01	488	1	4	5	1	SM14-Ex-EX54	
Kirkland_Main-3344	Kirkland_Manholes-3129	308.71	Kirkland_Manholes-2956	306.62	67.6	3.09	8	PVC	0.01	1,240	4	13	17	1.4		
Kirkland_Main-3345	Kirkland_Manholes-3130	70.51	Kirkland_Manholes-3131	61.63	403.3	2.2	8	PVC	0.01	1,046	0	4	5	0.5		
Kirkland_Main-3346	Kirkland_Manholes-3131	61.63	Kirkland_Manholes-201	56.98	404.6	1.15	8	PVC	0.01	756	1	9	10	1.3		
Kirkland_Main-3347	Kirkland_Manholes-3132	514.05	Kirkland_Manholes-3133	512.61	110	1.31	8	PVC	0.01	807	1	4	5	0.6		
Kirkland_Main-3348	Kirkland_Manholes-3133	512.61	Kirkland_Manholes-1441	509.69	156.4	1.87	8	PVC	0.01	963	1	9	10	1		
Kirkland_Main-3349	Kirkland_Manholes-3134	66.29	Kirkland_Manholes-1828	65.79	294	0.17	18	PVC	0.01	2,528	170	685	1,206	47.7	SM14-2035-DF11	
Kirkland_Main-3350	Kirkland_Manholes-2994	67.86	Kirkland_Manholes-3135	66.49	13.6	10.06	15	PVC	0.01	11,957	168	669	1,187	9.9		
Kirkland_Main-3351	Kirkland_Manholes-3135	66.49	Kirkland_Manholes-3134	66.29	136.2	0.15	18	PVC	0.01	2,374	168	677	1,196	50.4	SM14-2035-DF11	
Kirkland_Main-3353	Kirkland_Manholes-3137	192.8	Kirkland_Manholes-1304	180.12	128.3	9.88	8	PVC	0.01	2,216	6	17	22	1	SM14-Ex-EX106	
Kirkland_Main-3354	Kirkland_Manholes-1305	222.35	Kirkland_Manholes-3137	192.8	245.9	12.02	8	PVC	0.01	2,444	4	8	12	0.5	SM14-Ex-EX106	
Kirkland_Main-3356	Kirkland_Manholes-3138	280.24	Kirkland_Manholes-672	266.2	264	5.32	8	PVC	0.01	1,626	2	4	6	0.4		
Kirkland_Main-3357	Kirkland_Manholes-3139	191.69	Kirkland_Manholes-769	165.1	236	11.27	8	PVC	0.01	2,367	2	4	7	0.3		
Kirkland_Main-3358	Kirkland_Manholes-3140	184.54	Kirkland_Manholes-520	182.65	320.9	0.59	8	PVC	0.01	541	3	8	11	2.1	SM10	
Kirkland_Main-3359	Kirkland_Manholes-526	148.56	Kirkland_Manholes-3141	141.49	317.3	2.23	8	PVC	0.01	1,052	7	33	40	3.8	SM10	
Kirkland_Main-3360	Kirkland_Manholes-3141	141.49	Kirkland_Manholes-3107	127.14	314.8	4.56	8	PVC	0.01	1,505	17	66	83	5.5	SM10	
Kirkland_Main-3361	Kirkland_Manholes-495	169.48	Kirkland_Manholes-3142	153.62	319.4	4.97	8	PVC	0.01	1,571	6	17	22	1.4	SM10	
Kirkland_Main-3362	Kirkland_Manholes-3142	153.62	Kirkland_Manholes-3141	141.49	269.1	4.51	8	PVC	0.01	1,497	9	25	33	2.2	SM10	
Kirkland_Main-3366	Kirkland_Manholes-3148	304.94	Kirkland_Manholes-3147	292.59	197.5	6.25	8	PVC	0.01	1,763	3	4	7	0.4		
Kirkland_Main-3367	Kirkland_Manholes-3147	292.59	Kirkland_Manholes-3146	290.48	68.4	3.08	8	PVC	0.01	1,238	3	9	12	0.9		
Kirkland_Main-3368	Kirkland_Manholes-3146	290.48	Kirkland_Manholes-3145	283.25	74.7	9.68	8	PVC	0.01	2,194	3	13	16	0.7		
Kirkland_Main-3369	Kirkland_Manholes-3149	279.32	Kirkland_Manholes-672	266.2	331.7	3.96	8	PVC	0.01	1,402	16	52	68	4.8		
Kirkland_Main-3370	Kirkland_Manholes-2888	290.53	Kirkland_Manholes-3149	279.32	39.9	28.13	8	PVC	0.01	3,739	9	21	31	0.8		
Kirkland_Main-3371	Kirkland_Manholes-3145	283.25	Kirkland_Manholes-3149	279.32	272.6	1.44	8	PVC	0.01	847	6	26	32	3.8		
Kirkland_Main-3372	Kirkland_Manholes-1382	428.64	Kirkland_Manholes-3150	427.16	302.5	0.49	8	PVC	0.01	493	5	9	13	2.7		
Kirkland_Main-3373	Kirkland_Manholes-3150	427.16	Kirkland_Manholes-1347	427.05	67.8	0.16	8	PVC	0.01	284	7	13	20	6.9		
Kirkland_Main-3375	Kirkland_Manholes-2803	158.22	Kirkland_Manholes-3151	154.6	93.3	3.88	8	PVC	0.01	1,389	44	133	177	12.8	SM14-Ex-EX313	
Kirkland_Main-3376	Kirkland_Manholes-2609	193.8	Kirkland_Manholes-3152	172.55	189.8	11.2	8	PVC	0.01	2,359	2	9	10	0.4		
Kirkland_Main-3377	Kirkland_Manholes-3154	166.6	Kirkland_Manholes-3153	166.34	271.7	0.1	8	PVC	0.01	218	27	60	88	40.1	SM14-Ex-EX294	
Kirkland_Main-3378	Kirkland_Manholes-2629	172.55	Kirkland_Manholes-3154	166.6	85	7	8	PVC	0.01	1,865	14	26	40	2.2	SM14-Ex-EX295	
Kirkland_Main-3379	Kirkland_Manholes-3155	166.88	Kirkland_Manholes-3154	166.6	37.7	0.74	8	PVC	0.01	607	12	30	42	6.9	SM14-Ex-EX294	
Kirkland_Main-3380	Kirkland_Manholes-2637	187.87	Kirkland_Manholes-3156	168.61	186.4	10.33	8	PVC	0.01	2,267	11	21	33	1.4	SM14-Ex-EX294	
Kirkland_Main-3381	Kirkland_Manholes-3156	168.61	Kirkland_Manholes-3155	166.88	387	0.45	8	PVC	0.01	471	11	26	37	7.9	SM14-Ex-EX294	
Kirkland_Main-3382	Kirkland_Manholes-3153	166.34	O-37	146.26	92.7	21.67	8	PVC	0.01	3,282	120	305	424	12.9	SM14-Ex-EX294	
Kirkland_Main-3383	Kirkland_Manholes-3157	158.55	O-36	147.51	94.1	11.73	8	PVC	0.01	2,415	24	69	93	3.8	SM14-Ex-EX281	
Kirkland_Main-3384	Kirkland_Manholes-3158	172.29	Kirkland_Manholes-3157	158.55	121.1	11.35	8	PVC	0.01	2,375	2	4	6	0.2	SM14-Ex-EX281	
Kirkland_Main-3385	Kirkland_Manholes-2628	186	Kirkland_Manholes-3159	168.84	190.6	9	8	PVC	0.01	2,115	20	56	76	3.6	SM14-Ex-EX281	
Kirkland_Main-3386	Kirkland_Manholes-3159	168.84	Kirkland_Manholes-3157	158.55	57.7	17.84	8	PVC	0.01	2,978	22	60	82	2.7	SM14-Ex-EX281	Drop Connection
Kirkland_Main-3387	Kirkland_Manholes-2601	228.74	Kirkland_Manholes-3160	174.95	323	16.65	8	PVC	0.01	2,877	49	137	186	6.5	SM14-Ex-EX299	
Kirkland_Main-3388	Kirkland_Manholes-2796	185.45	Kirkland_Manholes-3161	177.36	230.8	3.5	8	PVC	0.01	1,320	9	21	30	2.3	SM14-Ex-EX296	
Kirkland_Main-3389	Kirkland_Manholes-2599	217.5	Kirkland_Manholes-3161	177.36	310.3	12.94	8	PVC	0.01	2,536	6	17	23	0.9	SM14-Ex-EX301	
Kirkland_Main-3390	Kirkland_Manholes-3162	175.71	Kirkland_Manholes-3160	174.95	166.9	0.46	8	PVC	0.01	476	17	47	64	13.4	SM14-Ex-EX296	
Kirkland_Main-3391	Kirkland_Manholes-3161	177.36	Kirkland_Manholes-3162	175.71	336.3	0.49	8	PVC	0.01	494	16	43	59	11.9	SM14-Ex-EX296	
Kirkland_Main-3392	Kirkland_Manholes-3160	174.95	Kirkland_Manholes-3163	173.85	309.7	0.36	8	PVC	0.01	420	67	189	256	61	SM14-Ex-EX296	
Kirkland_Main-3393	Kirkland_Manholes-3163	173.85	Kirkland_Manholes-3152	172.55	286.2	0.45	8	PVC	0.01	475	79	210	289	60.9	SM14-Ex-EX296	
Kirkland_Main-3394	Kirkland_Manholes-2600	217.97	Kirkland_Manholes-3163	173.85	279.5	15.78	8	PVC	0.01	2,801	10	17	27	1	SM14-Ex-EX298	
Kirkland_Main-3395	Kirkland_Manholes-3152	172.55	Kirkland_Manholes-3164	171.21	150.7	0.89	8	PVC	0.01	665	82	223	305	45.8	SM14-Ex-EX296	
Kirkland_Main-3397	Kirkland_Manholes-3164	171.21	Kirkland_Manholes-3153	166.34	136.7	3.56	8	PVC	0.01	1,331	91	240	331	24.9	SM14-Ex-EX296	
Kirkland_Main-3398	Kirkland_Manholes-2123	164.83	Kirkland_Manholes-3165	156.79	188.1	4.27	8	PVC	0.01	1,457	5	13	18	1.2	SM14-Ex-EX238	
Kirkland_Main-3399	Kirkland_Manholes-2493	157.85	Kirkland_Manholes-3165	156.79	186.1	0.57	8	PVC	0.01	532	1	4	6	1	SM14-Ex-EX237	
Kirkland_Main-3400	Kirkland_Manholes-3165	156.79	O-34	148.75	44.4	18.12	8	PVC	0.01	3,001	7	21	28	0.9	SM14-Ex-EX238	
Kirkland_Main-3401	Kirkland_Manholes-3151	154.6	O-38	150	83	5.54	12	PVC	0.01	4,894	44	137	182	3.7	SM14-Ex-EX313	
Kirkland_Main-3402	Kirkland_Manholes-3166	161.38	Kirkland_Manholes-3167	157.21	249.9	1.67	6	Concrete	0.013	325	10	13	23	7		
Kirkland_Main-3403	Kirkland_Manholes-3167	157.21	O-30	156.87	20.3	1.67	6	Concrete	0.013	326	10	17	27	8.4		Drop Connection
Kirkland_Main-3404	Kirkland_Manholes-2068	163.08	O-43	162.02	20.5	5.16	8	PVC	0.01	1,602	20	69	89	5.5	SM14-Ex-EX198	
Kirkland_Main-3405	Kirkland_Manholes-2069	170.43	Kirkland_Manholes-3168	162.8	388.5	1.96	8	PVC	0.01	988	93	103	196	19.9	SM14-Ex-EX199	
Kirkland_Main-3406	Kirkland_Manholes-3168	162.8	O-29	162.02	22.8	3.42	8	PVC	0.01	1,305	95	107	203	15.5	SM14-Ex-EX199	
Kirkland_Main-3407	Kirkland_Manholes-3169	153.32	Kirkland_Manholes-1708	148.34	451.5	1.1	12	PVC	0.01	2,183	1	8	9	0.4	SM14-Ex-EX197	
Kirkland_Main-3408	Kirkland_Manholes-3170	175.74	O-28	173.9	72.2	2.55	8	PVC	0.01	1,125	0	4	5	0.4		
Kirkland_Main-3409	Kirkland_Manholes-1642	158.76	O-27	153.59	147.5	3.5	12	PVC	0.01	3,891	395	1,026	1,421	36.5	SM7	

2035 (20-year) with Proposed Improvements - Peak Hour Flow - Pipe Capacity Table

Label	Upstream Node	Upstream Invert Elevation (ft)	Downstream Node	Downstream Invert Elevation (ft)	Length (ft)	Slope (%)	Diameter (in)	Material	Manning's n	Design Capacity (gpm)	Domestic Flow (gpm)	I/I Flow (gpm)	Total Flow (gpm)	Percent Full (%)	CIP No.	Notes
Kirkland_Main-3410	Kirkland_Manholes-1646	177.66	O-23	163.59	79.6	17.67	8	PVC	0.01	2,963	0	4	5	0.2	SM14-Ex-EX174	
Kirkland_Main-3411	Kirkland_Manholes-1602	196.74	Kirkland_Manholes-3171	164.9	343.8	9.26	8	PVC	0.01	2,146	103	258	361	16.8	SM14-Ex-EX172	
Kirkland_Main-3412	Kirkland_Manholes-3171	164.9	O-22	163.59	29	4.51	12	PVC	0.01	4,416	184	455	639	14.5	SM14-Ex-EX121	
Kirkland_Main-3413	Kirkland_Manholes-3172	165.73	Kirkland_Manholes-3171	164.9	49.5	1.68	8	PVC	0.01	913	80	193	273	30	SM14-Ex-EX121	
Kirkland_Main-3414	Kirkland_Manholes-1598	169.75	Kirkland_Manholes-3172	165.73	259.8	1.55	8	PVC	0.01	877	80	189	269	30.7	SM14-Ex-EX121	
Kirkland_Main-3415	Kirkland_Manholes-3173	155.95	O-16	154.93	82	1.24	8	PVC	0.01	787	11	41	52	6.6		
Kirkland_Main-3416	Kirkland_Manholes-1274	175.64	Kirkland_Manholes-3173	155.95	196.1	10.04	8	PVC	0.01	2,234	10	33	43	1.9		
Kirkland_Main-3417	Kirkland_Manholes-458	212.1	O-14	173.22	270.2	14.39	8	PVC	0.01	2,674	45	133	178	6.6	SM14-Ex-EX67	
Kirkland_Main-3418	Kirkland_Manholes-3174	172.82	O-13	166.72	27.1	22.51	8	PVC	0.01	3,345	4	21	25	0.8		
Kirkland_Main-3419	Kirkland_Manholes-472	192.62	Kirkland_Manholes-3174	172.82	71.3	27.75	8	PVC	0.01	3,714	4	17	21	0.6		
Kirkland_Main-3420	Kirkland_Manholes-466	159.47	O-12	159.29	18.7	0.96	8	PVC	0.01	691	19	60	79	11.5	SM14-Ex-EX45	
Kirkland_Main-3421	Kirkland_Manholes-786	173.41	O-11	153.37	102.1	19.63	8	PVC	0.01	3,124	94	318	412	13.2		
Kirkland_Main-3422	Kirkland_Manholes-3175	156.47	Kirkland_Manholes-1105	155.49	245.4	0.4	12	PVC	0.01	1,315	151	295	445	33.9	SM14-2021-DF3	
Kirkland_Main-3424	Kirkland_Manholes-3176	350.9	Kirkland_Manholes-2993	335.98	232.3	6.42	8	PVC	0.01	1,787	2	4	7	0.4		
Kirkland_Main-3425	Kirkland_Manholes-3183	400.11	Kirkland_Manholes-3182	398.7	286.4	0.49	8	PVC	0.01	495	0	4	5	0.9		
Kirkland_Main-3426	Kirkland_Manholes-3182	398.7	Kirkland_Manholes-3181	397.83	157.2	0.55	8	PVC	0.01	525	1	9	9	1.8		
Kirkland_Main-3427	Kirkland_Manholes-3181	397.83	Kirkland_Manholes-3180	396.32	304.9	0.5	8	PVC	0.01	496	1	13	14	2.9		
Kirkland_Main-3428	Kirkland_Manholes-3177	399.25	Kirkland_Manholes-3178	398.25	237	0.42	8	PVC	0.01	458	1	9	9	2		
Kirkland_Main-3429	Kirkland_Manholes-3178	398.25	Kirkland_Manholes-3179	397.18	174.5	0.61	8	PVC	0.01	552	1	13	14	2.5		
Kirkland_Main-3430	Kirkland_Manholes-3179	397.18	Kirkland_Manholes-3180	396.32	145.5	0.59	8	PVC	0.01	542	1	17	18	3.4		
Kirkland_Main-3431	Kirkland_Manholes-3180	396.32	Kirkland_Manholes-3186	394.01	374.3	0.62	8	PVC	0.01	554	3	34	38	6.8	SM14-Ex-EX207	
Kirkland_Main-3432	Kirkland_Manholes-3186	394.01	Kirkland_Manholes-3187	393.39	93.6	0.66	8	PVC	0.01	574	4	39	43	7.4	SM14-Ex-EX207	
Kirkland_Main-3433	Kirkland_Manholes-3187	393.39	Kirkland_Manholes-3188	392.16	246.3	0.5	8	PVC	0.01	498	4	43	47	9.5		
Kirkland_Main-3434	Kirkland_Manholes-3185	403.06	Kirkland_Manholes-3184	397.63	317.3	1.71	8	PVC	0.01	922	0	4	5	0.5		
Kirkland_Main-3435	Kirkland_Manholes-3184	397.63	Kirkland_Manholes-3189	393.42	318.2	1.32	8	PVC	0.01	811	38	9	46	5.7		
Kirkland_Main-3436	Kirkland_Manholes-3189	393.42	Kirkland_Manholes-3188	392.16	76.3	1.65	8	PVC	0.01	906	38	17	55	6.1		
Kirkland_Main-3437	Kirkland_Manholes-3188	392.16	Kirkland_Manholes-1929	374.67	305.2	5.73	8	PVC	0.01	1,688	43	64	107	6.3		
Kirkland_Main-3438	Kirkland_Manholes-3192	307.27	Kirkland_Manholes-3191	306.22	126.1	0.84	8	PVC	0.01	644	2	4	6	1		
Kirkland_Main-3439	Kirkland_Manholes-3191	306.22	Kirkland_Manholes-2894	306.1	28.9	0.4	8	PVC	0.01	446	4	13	17	3.8		
Kirkland_Main-3440	Kirkland_Manholes-3190	323.62	Kirkland_Manholes-3191	306.22	169.1	10.29	8	PVC	0.01	2,262	2	4	6	0.3		
Kirkland_Main-3441	Kirkland_Manholes-620	55.37	Kirkland_Manholes-3193	49.78	279.6	2	8	PVC	0.01	997	1	8	9	0.9		
Kirkland_Main-3442	Kirkland_Manholes-3193	49.78	Kirkland_Manholes-619	48.43	193	0.7	8	PVC	0.01	590	2	17	18	3.1		
Kirkland_Main-3443	Kirkland_Manholes-1685	57.24	Kirkland_Manholes-731	53.54	120.6	3.07	12	PVC	0.01	3,640	136	458	594	16.3	SM5	
Kirkland_Main-3444	Kirkland_Manholes-1852	284.97	Kirkland_Manholes-3145	283.25	105.1	1.64	8	PVC	0.01	902	2	9	10	1.2		
Kirkland_Main-3445	Kirkland_Manholes-2130	161.57	O-31	156.67	31.5	15.55	8	PVC	0.01	2,780	25	26	51	1.8	SM14-Ex-EX235	
Kirkland_Main-3446	Kirkland_Manholes-3195	259.3	Kirkland_Manholes-682	258.64	178.4	0.37	8	PVC	0.01	429	2	13	15	3.5		
Kirkland_Main-3447	Kirkland_Manholes-686	272.79	Kirkland_Manholes-3195	262.73	170.3	5.91	8	PVC	0.01	1,714	1	4	5	0.3		Drop Connection
Kirkland_Main-3448	Kirkland_Manholes-3194	260.3	Kirkland_Manholes-3195	259.3	92.2	1.08	8	PVC	0.01	733	1	4	5	0.7		
Kirkland_Main-3450	Kirkland_Manholes-3198	69.13	Kirkland_Manholes-2805	68.41	178.9	0.4	8	PVC	0.01	446	5	25	29	6.6		
Kirkland_Main-3451	Kirkland_Manholes-3197	131.57	Kirkland_Manholes-3196	122.5	306.9	2.96	8	PVC	0.01	1,212	2	8	11	0.9	SM10	
Kirkland_Main-3453	Kirkland_Manholes-2804	82.15	Kirkland_Manholes-3198	69.13	175.8	7.41	8	PVC	0.01	1,919	1	6	7	0.4		
Kirkland_Main-3454	Kirkland_Manholes-3200	88.54	Kirkland_Manholes-3199	84.4	128.7	3.22	8	PVC	0.01	1,264	1	6	7	0.6		
Kirkland_Main-3455	Kirkland_Manholes-3199	84.4	Kirkland_Manholes-3198	69.13	210.2	7.27	8	PVC	0.01	1,900	2	12	15	0.8		
Kirkland_Main-3456	Kirkland_Manholes-2778	255.64	Kirkland_Manholes-3201	243.59	148	8.14	8	PVC	0.01	2,012	22	16	38	1.9		
Kirkland_Main-3457	Kirkland_Manholes-3201	243.59	Kirkland_Manholes-2802	238.36	22.3	23.44	8	PVC	0.01	3,414	22	19	41	1.2		
Kirkland_Main-3458	Kirkland_Manholes-2641	88.89	Kirkland_Manholes-3202	66.61	82.1	27.14	8	PVC	0.01	3,673	10	25	35	1		
Kirkland_Main-3459	Kirkland_Manholes-3202	66.61	Kirkland_Manholes-3203	49.55	127.5	13.38	8	PVC	0.01	2,579	12	31	43	1.7		
Kirkland_Main-3461	Kirkland_Manholes-3204	163.55	Kirkland_Manholes-2130	161.57	74.1	2.67	8	PVC	0.01	1,153	1	4	5	0.5		
Kirkland_Main-3462	Kirkland_Manholes-3205	293.32	Kirkland_Manholes-1852	284.97	245.2	3.41	8	PVC	0.01	1,301	1	4	5	0.4		
Kirkland_Main-3463	Kirkland_Manholes-3206	505.9	Kirkland_Manholes-3207	502.85	330.6	0.92	8	PVC	0.01	677	3	4	7	1		
Kirkland_Main-3464	Kirkland_Manholes-3207	502.85	Kirkland_Manholes-3208	497.69	398.8	1.29	8	PVC	0.01	802	6	9	14	1.8		
Kirkland_Main-3465	Kirkland_Manholes-3208	497.69	Kirkland_Manholes-3209	497.22	90.8	0.52	8	PVC	0.01	507	7	13	20	3.9		
Kirkland_Main-3466	Kirkland_Manholes-3209	497.22	Kirkland_Manholes-3210	496.11	223.1	0.5	8	PVC	0.01	497	7	17	24	4.9		
Kirkland_Main-3467	Kirkland_Manholes-3210	496.11	Kirkland_Manholes-1494	496.1	92	0.01	8	PVC	0.01	74	8	21	30	40.2		
Kirkland_Main-3468	Kirkland_Manholes-3212	420.94	Kirkland_Manholes-3213	419.82	168.4	0.66	8	PVC	0.01	575	1	4	5	0.9		
Kirkland_Main-3469	Kirkland_Manholes-3213	419.82	Kirkland_Manholes-3214	418.95	128.5	0.68	8	PVC	0.01	580	2	9	10	1.8		
Kirkland_Main-3470	Kirkland_Manholes-3211	420.5	Kirkland_Manholes-3214	418.95	223.1	0.69	8	PVC	0.01	588	1	4	6	0.9		
Kirkland_Main-3471	Kirkland_Manholes-3214	418.95	Kirkland_Manholes-3215	418.25	213.6	0.33	8	PVC	0.01	404	3	17	20	5		
Kirkland_Main-3472	Kirkland_Manholes-3215	418.25	Kirkland_Manholes-3216	416.2	334.1	0.61	8	PVC	0.01	552	3	22	25	4.5		
Kirkland_Main-3473	Kirkland_Manholes-3216	416.2	Kirkland_Manholes-3217	414.96	329.2	0.38	8	PVC	0.01	433	4	26	30	6.9		
Kirkland_Main-3474	Kirkland_Manholes-3217	414.96	Kirkland_Manholes-3218	412.9	114.1	1.81	8	PVC	0.01	947	5	31	35	3.7		
Kirkland_Main-3475	Kirkland_Manholes-3218	412.9	Kirkland_Manholes-2906	405.37	172.8	4.36	8	PVC	0.01	1,472	5	35	40	2.7		

2035 (20-year) with Proposed Improvements - Peak Hour Flow - Pipe Capacity Table

Label	Upstream Node	Upstream Invert Elevation (ft)	Downstream Node	Downstream Invert Elevation (ft)	Length (ft)	Slope (%)	Diameter (in)	Material	Manning's n	Design Capacity (gpm)	Domestic Flow (gpm)	I/I Flow (gpm)	Total Flow (gpm)	Percent Full (%)	CIP No.	Notes
Kirkland_Main-3476	Kirkland_Manholes-718	150.12	Kirkland_Manholes-3219	149.17	95.4	1	12	PVC	0.01	2,074	333	88	421	20.3	SM14-2035-DF5	
Kirkland_Main-3477	Kirkland_Manholes-3219	149.17	Kirkland_Manholes-3220	148.71	120.2	0.38	12	PVC	0.01	1,286	335	95	430	33.4	SM14-2021-DF2	
Kirkland_Main-3478	Kirkland_Manholes-3220	148.71	Kirkland_Manholes-719	148.45	82.3	0.32	12	PVC	0.01	1,168	338	101	438	37.5	SM14-2021-DF2	
Kirkland_Main-3479	Kirkland_Manholes-3221	407.29	Kirkland_Manholes-3222	405.15	69.7	3.07	8	PVC	0.01	1,235	2	4	6	0.5		
Kirkland_Main-3480	Kirkland_Manholes-3222	405.15	Kirkland_Manholes-1363	403.55	104.8	1.53	8	PVC	0.01	871	3	9	12	1.4		
Kirkland_Main-3481	Kirkland_Manholes-3223	405.2	Kirkland_Manholes-3224	400.94	146.9	2.9	8	PVC	0.01	1,201	2	4	6	0.5		
Kirkland_Main-3482	Kirkland_Manholes-3225	409.6	Kirkland_Manholes-3224	400.94	369	2.35	8	PVC	0.01	1,080	2	4	6	0.5		
Kirkland_Main-3483	Kirkland_Manholes-3224	400.94	Kirkland_Manholes-3226	396.71	176	2.4	8	PVC	0.01	1,093	4	13	17	1.5		
Kirkland_Main-3484	Kirkland_Manholes-3226	396.71	Kirkland_Manholes-2992	396.35	10.8	3.34	8	PVC	0.01	1,289	4	17	21	1.6		
Kirkland_Main-3485	Kirkland_Manholes-3227	308.86	Kirkland_Manholes-3228	299.55	189.6	4.91	8	PVC	0.01	1,562	1	4	5	0.3		
Kirkland_Main-3486	Kirkland_Manholes-3228	299.55	Kirkland_Manholes-3229	296.76	44.7	6.24	8	PVC	0.01	1,761	1	9	10	0.6		
Kirkland_Main-3487	Kirkland_Manholes-3229	296.76	Kirkland_Manholes-2901	294.77	63.1	3.16	8	PVC	0.01	1,252	2	13	14	1.2		
Kirkland_Main-3488	Kirkland_Manholes-3230	157.83	Kirkland_Manholes-3231	156.85	192.6	0.51	8	PVC	0.01	503	3	6	9	1.8		
Kirkland_Main-3489	Kirkland_Manholes-3231	156.85	Kirkland_Manholes-3232	156.12	91	0.8	8	PVC	0.01	632	13	13	26	4.1		
Kirkland_Main-3490	Kirkland_Manholes-3232	156.12	Kirkland_Manholes-716	152.58	36.4	9.73	8	PVC	0.01	2,199	16	19	35	1.6		
Kirkland_Main-3492	Kirkland_Manholes-3233	197.29	Kirkland_Manholes-1117	196.58	41.1	1.73	15	PVC	0.01	4,957	19	4	23	0.5		
Kirkland_Main-3493	Kirkland_Manholes-3235	436.7	Kirkland_Manholes-2008	435.7	179.8	0.56	8	PVC	0.01	526	4	9	12	2.4		
Kirkland_Main-3494	Kirkland_Manholes-3234	236.42	Kirkland_Manholes-1249	223.25	243.5	5.41	8	PVC	0.01	1,640	24	91	115	7	SM14-Ex-EX65	
Kirkland_Main-3495	Kirkland_Manholes-1247	236.99	Kirkland_Manholes-3234	236.42	76.3	0.75	8	PVC	0.01	609	20	74	95	15.6	SM14-Ex-EX65	
Kirkland_Main-3496	Kirkland_Manholes-3237	442.96	Kirkland_Manholes-3235	436.7	126.7	4.94	8	PVC	0.01	1,567	2	4	6	0.4		
Kirkland_Main-3497	Kirkland_Manholes-3242	314.11	Kirkland_Manholes-3243	305.45	217.3	3.98	8	PVC	0.01	1,407	0	4	5	0.3		
Kirkland_Main-3498	Kirkland_Manholes-3243	305.45	Kirkland_Manholes-2372	304.48	24.4	3.99	8	PVC	0.01	1,408	1	9	9	0.7		
Kirkland_Main-3499	Kirkland_Manholes-3241	300.47	Kirkland_Manholes-3240	289.24	289.6	3.88	8	PVC	0.01	1,388	2	4	6	0.5		
Kirkland_Main-3500	Kirkland_Manholes-3240	289.24	Kirkland_Manholes-3239	288.78	114.9	0.4	8	PVC	0.01	446	2	9	11	2.5		
Kirkland_Main-3501	Kirkland_Manholes-3239	288.78	Kirkland_Manholes-3238	285.43	95.5	3.51	8	PVC	0.01	1,321	3	13	16	1.2		
Kirkland_Main-3502	Kirkland_Manholes-263	292.03	Kirkland_Manholes-3238	285.43	114.2	5.78	8	PVC	0.01	1,695	41	107	148	8.7	SM14-Ex-EX252	
Kirkland_Main-3503	Kirkland_Manholes-3238	285.43	Kirkland_Manholes-2327	280.44	83.6	5.97	8	PVC	0.01	1,722	45	124	169	9.8	SM14-Ex-EX252	
Kirkland_Main-3505	Kirkland_Manholes-3236	241.89	Kirkland_Manholes-3234	236.42	154.2	3.55	8	PVC	0.01	1,328	2	8	11	0.8		
Kirkland_Main-3506	Kirkland_Manholes-2486	152.49	O-35	152.05	116.8	0.38	8	PVC	0.01	433	54	137	191	44.2	SM14-Ex-EX239	
Other_System_Main-6	MH-320	399.28	Kirkland_Manholes-3177	399.25	69.1	0.04	6	PVC	0.01	64	0	4	5	7.2		
Other_System_Main-7	MH-317	393.56	Kirkland_Manholes-3189	393.42	34.5	0.4	8	PVC	0.01	446	0	4	5	1		
Other_System_Main-8	MH-326	162.67	MH-323	161.73	233.9	0.4	8	PVC	0.01	446	0	4	5	1		
Other_System_Main-9	MH-323	161.73	Kirkland_Manholes-3166	161.38	88.4	0.4	6	PVC	0.01	207	9	9	18	8.7		
SS_Main_Selection_06-13-2016-1	MH 05-714	24.7	MH_Selection_06-13-2016-2	24.58	51.6	0.23	30	Ductile Iron	0.012	9,616	1,562	3,474	6,787	70.6	SM9	Updated per as-built drawings
SS_Main_Selection_06-13-2016-11	MH_Selection_06-13-2016-4	21.4	MH_Selection_06-13-2016-10	20.85	62.6	0.88	48	Concrete	0.013	60,432	1,938	4,093	7,782	12.9		Updated per as-built drawings
SS_Main_Selection_06-13-2016-12	MH_Selection_06-13-2016-10	20.85	MH_Selection_06-13-2016-11	20.7	78.4	0.19	48	Concrete	0.013	28,192	1,938	4,093	7,782	27.6		Updated per as-built drawings
SS_Main_Selection_06-13-2016-2	MH_Selection_06-13-2016-3	22.2	MH_Selection_06-13-2016-4	21.4	166.2	0.48	48	Concrete	0.013	44,726	1,562	3,474	6,787	15.2		Updated per as-built drawings
SS_Main_Selection_06-13-2016-3	MH_Selection_06-13-2016-2	24.22	MH_Selection_06-13-2016-6	24.16	7.3	0.82	30	Ductile Iron	0.012	18,021	1,562	3,474	6,787	37.7	SM9	Updated per as-built drawings
SS_Main_Selection_06-13-2016-4	MH_Selection_06-13-2016-6	24.16	MH_Selection_06-13-2016-7	23.6	28.1	1.99	30	Ductile Iron	0.012	28,152	1,562	3,474	6,787	24.1	SM9	Updated per as-built drawings
SS_Main_Selection_06-13-2016-5	MH_Selection_06-13-2016-7	23.5	MH_Selection_06-13-2016-8	22.81	32.8	2.11	48	Concrete	0.013	93,567	1,562	3,474	6,787	7.3		Updated per as-built drawings
SS_Main_Selection_06-13-2016-6	MH_Selection_06-13-2016-8	22.81	MH_Selection_06-13-2016-9	22.44	14.9	2.49	48	Concrete	0.013	101,749	1,562	3,474	6,787	6.7		Updated per as-built drawings
SS_Main_Selection_06-13-2016-7	MH_Selection_06-13-2016-9	22.44	MH_Selection_06-13-2016-3	22.2	69.4	0.35	48	Concrete	0.013	37,907	1,562	3,474	6,787	17.9		Updated per as-built drawings
SS_Main_Selection_06-13-2016-9	MH_Selection_06-13-2016-5	24.55	MH_Selection_06-13-2016-11	23.6	12.8	7.44	12	PVC	0.013	4,360.77	184.51	140.349	324.857	7.4		Updated per as-built drawings

2035 (20-year) with Proposed Improvements - Peak Hour Flow - Pump Table

Label	Status	Pump Definition	Pumped Flow (gpm)	Pump Head (ft)	Notes
PLAZA_PUMP	On	LAKE PLAZA-Prop 1,400gpm	1,400	48.2	
ROSEPT_PUMP	On	ROSE PT LANE	301	65.8	
SOUTHBAY_PUMP	On	SOUTH BAY	180	190.0	
TREND_PUMP	On	TREND	176	25.0	
WAVERLY_PUMP	On	WAVERLY PARK-Prop 350gpm	350	116.1	
YARROWBAYII_PUMP	On	YARROW POINT	72	45.8	

2035 (20-year) with Proposed Improvements - Peak Hour Flow - Wet Well Table

Label	Ground Elevation (ft)	Maximum Elevation (ft)	Initial Elevation (ft)	Minimum Elevation (ft)	Base Elevation (ft)	Flow In (gpm)	Flow Out (gpm)	Net Flow In (gpm)	Notes
PLAZA_WW	21.95	10	6.5	2	0	1,392	1,400	-8	
ROSEPT_WETWELL	28.91	28	12	11	10	152	301	-149	
SOUTHBAY_WETWELL	42.96	26.5	25	24	22	47	180	-133	
TREND_WETWELL	340.3	330	330	321.5	317.75	109	176	-67	
WAVERLY_WETWELL	27	10	2	1	0	331	350	-19	
YARROW POINT_WETWELL	32.18	20	8	6	6	60	72	-12	

APPENDIX H

List of Known Industrial Wastewater Producers and Authorization Letters and Permits

THIS PAGE INTENTIONALLY LEFT BLANK

Name	Investigator	Sewer Provider	Customer Type	Address	City	Zip Code	Permit #	Effective Date	Expiration Date	Permit Type	Period of Wastewater Production	Permitted Discharge Flow Limits	Permitted Discharge Quality Limits
84th Rose Terrace LLC Construction Project	Despina Strong	City of Kirkland	Construction Dewatering	12802 NE 84th Street	Kirkland	98003	40055-01	24-Oct-16	23-Oct-18	GLA-Construction	Temporary (Contstruction)	Max. Instantaneous = 200 gpm Max. Daily = 25,000 gpd	See Page 2 of Letter
Absolute GM LLC	Todd Growing	City of Kirkland	General Type	11809 NE 116th Street	Kirkland	98034	400314-01	27-Jun-16		No Control Document Required	No Control Document Required		
AquaTactics LLC (aka Aqua Life Veterinary Services LLC)	Peggy Rice	Northshore Utility District	Laboratory	12015 115th Avenue NE, Suite 120	Kirkland	98034	400292-01	07-Mar-16		No Control Document Required	Not in City's Sewer Service Area		
Astronics AES Corporation	Dave Haberman	City of Kirkland	Manufacturing - Misc.	12950 Willows Road NE	Kirkland	98034	400160-01	14-Aug-14		No Control Document Required	No Control Document Required		
Big Mountain Express Enterprises - Hultquist Homes - Ridge at Finn Hill	Lydia Eng	Northshore Utility District	Construction Dewatering	NE 145th Street and 81st Avenue NE	Kirkland	98034	11782-01	03-Aug-17	03-Nov-17	Letter of Authorization	Not in City's Sewer Service Area		
DTSJ Holdings, LLC - Chick-fil-A Construction Project	Despina Strong	City of Kirkland	Construction Dewatering	12026 NE 124th Street	Kirkland	98034	40091-01	02-Feb-17	01-Feb-19	GLA-Construction	Temporary (Contstruction)	Max. Instantaneous = 200 gpm Max. Daily = 25,000 gpd	See Page 2 of Letter
Dibble Engineers - Market Street Construction Project	Ryan Salem	City of Kirkland	Construction Dewatering	1029 Market Street	Kirkland	98033	11778-01	17-Jul-17	16-Jul-19	Letter of Authorization	Temporary (Contstruction)	Max. Instantaneous = 100 gpm Max. Daily = 18,000 gpd	See Page 1 of Letter
Dynamic Harvest	Peggy Rice	City of Kirkland	Cannabis Grower	13513 NE 126th Place, Suite B	Kirkland	98034	400304-01	11-May-16		No Control Document Required	No Control Document Required		
East West Quality Home LLC Construction Project	Despina Strong	Northshore Utility District	Construction Dewatering	11610 80th Avenue NE	Kirkland	98033	40066-01	08-Nov-16	07-Nov-18	GLA-Construction	Not in City's Sewer Service Area		
Eastside Preparatory School - Schuchart Corporation - TALI Hall Construction Project	Despina Strong	City of Kirkland	Construction Dewatering	10613 NE 38th Place	Kirkland	98033	40114-01	31-Jul-17	30-Jul-19	GLA-Construction	Temporary (Contstruction)	Max. Instantaneous = 200 gpm Max. Daily = 25,000 gpd	See Page 2 of Letter
Eastside Subaru - Kirkland Automotive Holdings	Peggy Rice	City of Kirkland	Wash Pad	11803 Northeast 116th Street	Kirkland	98034	400342-01	10-Nov-16		No Control Document Required	No Control Document Required		
Evergreen Health	Lydia Eng	Northshore Utility District	Hospital	12040 NE 128th Street	Kirkland	98034	703-04	02-Aug-17	01-Aug-22	Minor Discharge Authorization	Not in City's Sewer Service Area		
Float Rubicon	Peggy Rice	City of Kirkland	General Type	9715 NE 119th Way	Kirkland	98034	101152-01	10-Mar-17		No Control Document Required	No Control Document Required		
Fractal LLC	Ryan Salem	City of Kirkland	General Type	13625 NE 126th Place, Suite 400	Kirkland	98034	400299-01	06-Apr-16		No Control Document Required	No Control Document Required		
Havlik's Radiator Service Inc.	Ryan Salem	City of Kirkland	Radiator Repair	11851 124th Avenue NE	Kirkland	98034	11699-01	01-Jun-16	31-May-21	Letter of Authorization	Long-term	Max. Daily = 300 gpd	See Pages 1 through 2 of Letter
Hy Kitchen Cabinet & Stone Inc.	Dave Haberman	City of Kirkland	General Type	11251 120th Avenue NE, Suite 146	Kirkland	98033	400049-01	03-Jul-13		No Control Document Required	No Control Document Required		
King County SWD - Houghton Transfer Station	Ryan Salem	City of Kirkland	Solid Waste - Transfer Facility	11724 NE 60th Street	Kirkland	98033	4423-01	01-Aug-17	31-Jul-22	Major Discharge Authorization	Long-term	Max. Daily = 78,000 gpd Max. Month Average = 25,000 gpd	See Pages 6 through 8 of Permit
Kirkland Main Street, LP - Park Lane Mixed-Use Apartments Construction Project	Despina Strong	City of Kirkland	Construction Dewatering	207 Park Lane	Kirkland	98033	40032-01	29-Jul-16	28-Jul-18	GLA-Construction	Temporary (Contstruction)	Max. Instantaneous = 200 gpm Max. Daily = 25,000 gpd	See Page 2 of Letter
Kirkland, City of - Lake Washington Blvd. Crossing Enhancement Construction Project	Despina Strong	City of Kirkland	Construction Dewatering	3781 Lake Washington Blvd	Kirkland	98033	40016-01	15-Apr-16	14-Apr-18	GLA-Construction	Temporary (Contstruction)	Max. Instantaneous = 200 gpm Max. Daily = 25,000 gpd	See Page 2 of Letter
Kirkland, City of - Storm/Sewer Decant Station	Todd Growing	City of Kirkland	Decant Station	904 8th Street	Kirkland	98033-6189	4131-03	28-Aug-17	27-Aug-22	Major Discharge Authorization	Long-term	Max. Daily at Final MH Catch Basin = 13,000 gpd Max. Daily at Vault 3 = 1,500 gpd	See Pages 5 through 7 of Permit
Maelstrom Brewing LLC	Ryan Salem	City of Kirkland	Food Processing - Brewery	11014 120th Avenue NE	Kirkland	98033	400378-01	25-Jul-17		No Control Document Required	No Control Document Required		
Overlake Oil Inc.	Lydia Eng	City of Kirkland	Fueling Facility	1021 Eighth Street	Kirkland	98033	400315-01	12-Jul-16		No Control Document Required	No Control Document Required		
PPN Ventures LP - Cubes Self Storage	Despina Strong	City of Kirkland	Construction Dewatering	615 Seventh Avenue	Kirkland	98033	40056-01	25-Oct-16	24-Oct-18	GLA-Construction	Temporary (Contstruction)	Max. Instantaneous = 200 gpm Max. Daily = 25,000 gpd	See Page 2 of Letter
Pillar Properties - 11 Main Street South Footing Drains	Peggy Rice	Northshore Utility District	Groundwater Remediation	11 Main Street South	Kirkland	98033	4414-01	20-Mar-17	19-Mar-22	Major Discharge Authorization	Not in City's Sewer Service Area		
Puget Sound Developers Services	Dana Heinz	City of Kirkland	General Type	733 126th Avenue NE	Kirkland	98033	400045-01	28-May-13		No Control Document Required	No Control Document Required		
Quality Finishing	Dana Heinz	Northshore Utility District	Metal Finishing - CFR 433	12704 NE 124th Street, Suite 42	Kirkland	98034	9708-02	05-Feb-15	04-Feb-20	Zero Discharge (Categorical)	Not in City's Sewer Service Area		
Silicon Designs Inc. - Kirkland	Ryan Salem	Northshore Utility District	Electronic Components	13905 NE 128th Street	Kirkland	98034	7914-01	15-Apr-15	30-Jun-18	Permit	Not in City's Sewer Service Area		
Toll Brothers Inc. - Kirkland Compound Construction Project	Ryan Salem	City of Kirkland	Construction Dewatering	11808 NE 70th Street	Kirkland	98033	11732-01	15-Nov-16	14-Nov-18	Letter of Authorization	Temporary (Contstruction)	Max. Instantaneous = 50 gpm Max. Daily = 25,000 gpd	See Page 1 of Letter
Village at Totem Lake - Bldg. D	Greg Newborn	Northshore Utility District	General Type	12632 Totem Lake Blvd	Kirkland	98034	400385-01	20-Sep-17		No Control Document Required	Not in City's Sewer Service Area		
Village at Totem Lake, LLC	Greg Newborn	Northshore Utility District	General Type	12660 Totem Lake Blvd	Kirkland	98034	400334-01	21-Sep-16		No Control Document Required	Not in City's Sewer Service Area		
Western Pneumatic Tube Company LLC	Dave Haberman	City of Kirkland	Metal Finishing - CFR 433	835 Sixth Street S	Kirkland	98033	7604-05	31-Dec-15	30-Dec-20	Permit	Long-term	Max. Daily at Discharge Pipe = 7,980 gpd Max. Daily at Spigot on Silver Recovery Unit = 20 gpd	See Pages 7 through 8 of Permit
Windward Wendy LLC Construction Project	Despina Strong	City of Kirkland	Construction Dewatering	301 Fourth Avenue	Kirkland	98033	40131-01	01-Oct-17	30-Sep-19	GLA-Construction	Temporary (Contstruction)	Max. Instantaneous = 200 gpm Max. Daily = 25,000 gpd	See Page 2 of Letter

King County
Wastewater Treatment Division
Industrial Waste Program
Department of Natural Resources and Parks
201 South Jackson Street, Suite 513
Seattle, WA 98104-3855
206-477-5300 Fax 206-263-3001
TTY Relay: 711

October 20, 2016

Wei Zhang
84th Rose Terrace LLC
1800 136th Place NE, Suite 100
Bellevue, WA 98005

General Letter of Authorization – Construction: # 40055-01 for 84th Rose Terrace LLC Construction Project to Discharge to the King County Sanitary Sewer

Dear Mr. Wei Zhang: 12802 NE 84th St

In accordance with King County Code 28.84.060, King County Industrial Waste Program (KCIW) authorizes the discharge of construction dewatering/process wastewater to the King County sanitary sewer from the 84th Rose Terrace LLC Construction Project. This project is required to meet all the limitations, monitoring requirements, and other conditions specified in this authorization.

This authorization is the only KCIW authorization that will be issued for the project identified in your application. This authorization is issued for the maximum duration of two years. It is valid from October 24, 2016, through October 23, 2018, or the duration of this project, whichever comes first. It is the permittee's responsibility to notify KCIW of project closure or any changes with this project.

This authorization alone does not allow you to discharge to the sanitary sewer. You must contact the local sewer agency to obtain approval along with a discharge location before discharging to the sanitary sewer. Wastewater from this project must be discharged to/at the location(s) specified by the local sewer agency. The local sewer agency will assess sewer charges, set flow rate restrictions and may impose additional requirements.

General Conditions

All discharges and activities approved by this authorization shall be consistent with King County Code 28.84.060 and the terms and conditions outlined in this authorization. A copy of this discharge approval, as well as required daily monitoring records, shall be on site and available for review and reference by KCIW or local sewer agency representatives.
This authorization to discharge is based on your agreement and signed application.

This authorization permits the discharge of up to 25,000 gallons per day (gpd) of construction dewatering from the construction site into the sanitary sewer. Discharging pollutants more frequently or in higher concentrations or quantity than authorized in this letter is a violation of the terms and conditions of this authorization. You must contact KCIW in advance and receive authorization before making changes beyond the terms and conditions of this authorization. Examples of changes include:

- Construction dewatering volume above 25,000 gpd.
- Site's surface area generates contaminated stormwater that exceeds one acre in aggregate.
- Site conditions indicate potential for chemical contamination.
- Substantial changes in the quality of the discharged water.
- Discharge of wastes or contaminants from sources other than those permitted herein.

This permit does not constitute authority for discharge into waters of the state. Any such discharge is subject to enforcement action by the Washington State Department of Ecology.

You must allow authorized representatives of KCIW to enter, inspect, and sample as specified in King County Code 28.84.060.L, "Inspection and Sampling of Industrial Users."

You must install an accessible sampling spigot on the discharge pipe from the last treatment unit of the wastewater treatment system. The sample site shall be representative of all industrial waste streams discharged to the sewer from this project. Each sample site shall be accessible to KCIW representatives when discharge to the sewer is occurring.

You must install a totalizing, non-resettable flow meter on all permitted discharge pipes to the sewer or as approved by your local sewer agency. The meters shall account for all industrial waste streams discharged to the sewer from this site.

Discharge Limitations

Parameter	Limitation
Instantaneous maximum discharge rate	To be determined by local sewer agency. Not to exceed 200 gallons per minute or the sedimentation tank flow restriction, whichever is more stringent.
Maximum daily discharge volume	25,000 gpd
Settleable solids	7.0 mL/L
Nonpolar fats, Oil & Grease (FOG)	100 mg/L
pH Minimum	5.5 s.u.
pH Maximum	12 s.u.
Soluble Sulfides (Screening Level)	0.1 mg/L

The water being discharged will not do the following:

- Violate any discharge standard, limitation, or specific prohibition of King County Code 28.84.060 or local discharge limits applicable on the date of discharge (see Section 28.84.060.D-F of the King County Code).
- Contain the odor of solvent, gasoline, or hydrogen sulfide (rotten egg odor), oil sheen, unusual color, or visible turbidity.
- Cause hydraulic overloading conditions of the sewerage conveyance system. During periods of peak hydraulic loading, KCIW or local sewer agency representatives reserve the authority to request that discharge to the sewer be stopped.

You must stop discharging and notify KCIW, by phone at 206-477-5300 or email at info.KCIW@kingcounty.gov, if you exceed any of the discharge limits, or notice odor of solvent, gasoline, or hydrogen sulfide (rotten egg odor), oil sheen, unusual color, or visible turbidity.

Monitoring Requirements

You shall conduct the following self-monitoring requirements for this authorization.

Parameter	Frequency	Sample Type/Method
Discharge volume	Daily	In-line flow meter
Discharge rate	Daily	In-line flow meter
Settleable solids	Daily	Grab by Imhoff cone[1]

All tests, measurements and analyses shall be performed in accordance with procedures established by the administrator of the U.S. Environmental Protection Agency (EPA) pursuant to section 304(g) of the federal Clean Water Act and contained in 40 CFR Part 136 and amendments thereto or with any other test procedure approved in writing by the EPA administrator, and/or KCIW.

Records Management

You will maintain records relating to all permitted discharges to the King County sewerage system including but not limited to routine maintenance, waste disposal dates, manifests, any analytical lab results, monitoring records, and flow records.

All records required must be available for review by KCIW and must be kept through the completion of the project.

---

[1] The settleable solids field test by Imhoff cone must be performed as follows:
- Fill cone to one-liter mark with well-mixed sample.
- Allow 45 minutes to settle.
- Gently stir sides of cone with a rod or by spinning. Settle 15 minutes longer.
- Record volume of settleable matter in the cone as mL/L.

Special Conditions

You must implement erosion control best management practices to minimize the amount of solids discharged to the sanitary sewer system. As a minimum precaution, the construction dewatering must be pumped to an appropriately sized settling tank prior to entering the sewer system.

The authorization to discharge is based on your agreement and signed application to comply with the minimum standards outlined in *Minimum Standards for Rectangular Sedimentation Tank Design and Technical memorandum* found on county's webpage[2].

The following two sedimentation tank options may be used, depending on site conditions and project requirements:

1. Rectangular Sedimentation Tank (Flow-Through Discharge)

   The minimum required standards for the flow-through system are:

   - Minimum hydraulic retention time: ≥ 90 minutes
   - Minimum length-to-width ratio (length : width): ≥ 4:1
   - Maximum overflow rate (gallons-per-minute per square foot of surface area): ≤ 1.0 gpm/ft^2
   - Maximum sediment accumulation (level of sedimentation tank water column): ≤ 25%
   - Requirement to add additional sedimentation tanks in parallel for higher flow rates[3].

2. Circular Sedimentation Tank (Batch Discharge):

   At some smaller construction sites, process wastewater is produced intermittently. The minimum required standards for batch discharge area as follows:

   - Minimum 5,000 gallon circular tank, which can accommodate a maximum of five batch discharges per day.
   - At least one hour of quiescent (undisturbed) settling must occur in the tank prior to discharge. During this settling time, no additional process wastewater can be added to the sedimentation tank.
   - Maximum sediment accumulation (level of sedimentation tank water column): ≤ 25%

---

[2] http://www.kingcounty.gov/environment/wastewater/IndustrialWaste/GettingDischargeApproval/Construction/Sedimentation_tanks.aspx.

[3] Example: At 200 gpm flow, to meet the Minimum hydraulic retention time of ≥ 90 minutes, you need a minimum of 18,000 gallons rectangular tank (18,000 gal / 200 gal/min = 90 minute hydraulic retention time). Correspondingly, at 100-gpm flow, you need a 9,000-gallon tank, and at 65 gpm, the tank volume shall be 5850 gallons. If gravity discharge from the tank is not possible, the effective volume of the tank needs to be reduced to the level of the pump intake and under no circumstances can the pump intake be lower than one-half (1/2) of the tank height.

The permittee shall properly operate and maintain all wastewater treatment units to ensure compliance with established discharge limits. Solids accumulation in tanks used for solids settling shall not exceed 25 percent of the tank's working hydraulic capacity. Each tank's working hydraulic capacity is based on the water column height as measured from the bottom of the tank to either the invert elevation of the tank's outlet pipe (gravity discharges) or discharge pump intake (pumped discharges).

General Information

King County Code 28.84 authorizes a fee for each Letter of Authorization issued by the King County Department of Natural Resources and Parks. The current fee for issuance of a Letter of Authorization is $800. King County will send an invoice for this amount.

If you have any questions about this authorization or your construction dewatering discharge, please call us at 206-477-5300, or email us at info.KCIW@kingcounty.gov. You may also visit our program's Internet pages at www.kingcounty.gov/industrialwaste.

Thank you for helping support our mission to protect public health and enhance the environment.

Sincerely,

Despina Strong
Industrial Waste Program Manager

Enclosure

cc: Katy Coleman/Greg Neumann, City Of Kirkland

King County
Wastewater Treatment Division
Industrial Waste Program
Department of Natural Resources and Parks
201 South Jackson Street, Suite 513
Seattle, WA 98104-3855
206-477-5300 Fax 206-263-3001
TTY Relay: 711

February 7, 2017

Michael O. Moore
DTSJ Holdings, LLC
422 Bayview Blvd.
Newport, WA 99156

General Letter of Authorization – Construction: # 40091-01 for DTSJ Holdings, LLC – Chick-fil-A Construction Project to Discharge to the King County Sanitary Sewer

Dear Mr. Michael O. Moore:

In accordance with King County Code 28.84.060, King County Industrial Waste Program (KCIW) authorizes the discharge of construction dewatering/process wastewater to the King County sanitary sewer from the DTSJ Holdings, LLC - Chick-fil-A Construction Project located at 12026 NE 124th Street, Kirkland, WA 98034. This project is required to meet all the limitations, monitoring requirements, and other conditions specified in this authorization.

This authorization is the only KCIW authorization that will be issued for the project identified in your application. This authorization is issued for the maximum duration of two years. It is valid from February 2, 2017, through February 1, 2019, or the duration of this project, whichever comes first. It is the permittee's responsibility to notify KCIW of project closure or any changes with this project.

This authorization alone does not allow you to discharge to the sanitary sewer. You must contact the local sewer agency to obtain approval along with a discharge location before discharging to the sanitary sewer. Wastewater from this project must be discharged to/at the location(s) specified by the local sewer agency. The local sewer agency will assess sewer charges, set flow rate restrictions and may impose additional requirements.

General Conditions

All discharges and activities approved by this authorization shall be consistent with King County Code 28.84.060 and the terms and conditions outlined in this authorization. A copy of this discharge approval, as well as required daily monitoring records, shall be on site and available for review and reference by KCIW or local sewer agency representatives.
This authorization to discharge is based on your agreement and signed application.

This authorization permits the discharge of up to 25,000 gallons per day (gpd) of construction dewatering from the construction site into the sanitary sewer. Discharging pollutants more frequently or in higher concentrations or quantity than authorized in this letter is a violation of the terms and conditions of this authorization. You must contact KCIW in advance and receive authorization before making changes beyond the terms and conditions of this authorization. Examples of changes include:

- Construction dewatering volume above 25,000 gpd.
- Site's surface area generates contaminated stormwater that exceeds one acre in aggregate.
- Site conditions indicate potential for chemical contamination.
- Substantial changes in the quality of the discharged water.
- Discharge of wastes or contaminants from sources other than those permitted herein.

This permit does not constitute authority for discharge into waters of the state. Any such discharge is subject to enforcement action by the Washington State Department of Ecology.

You must allow authorized representatives of KCIW to enter, inspect, and sample as specified in King County Code 28.84.060.L, "Inspection and Sampling of Industrial Users."

You must install an accessible sampling spigot on the discharge pipe from the last treatment unit of the wastewater treatment system. The sample site shall be representative of all industrial waste streams discharged to the sewer from this project. Each sample site shall be accessible to KCIW representatives when discharge to the sewer is occurring.

You must install a totalizing, non-resettable flow meter on all permitted discharge pipes to the sewer or as approved by your local sewer agency. The meters shall account for all industrial waste streams discharged to the sewer from this site.

Discharge Limitations

Parameter	**Limitation**
Instantaneous maximum discharge rate	To be determined by local sewer agency. Not to exceed 200 gallons per minute or the sedimentation tank flow restriction, whichever is more stringent.
Maximum daily discharge volume	25,000 gpd
Settleable solids	7.0 mL/L
Nonpolar Fats, Oil & Grease (FOG)	100 mg/L
Instantaneous Minimum pH[1]	5.0 s.u.
Daily Minimum pH[2]	5.5 s.u.
Maximum pH	12 s.u.
Soluble Sulfides (Screening Level)	0.1 mg/L

[1] The instantaneous minimum pH limit is violated whenever any single grab sample or any instantaneous recording is less than pH 5.0.

[2] The daily minimum pH limit is violated whenever any continuous recording of 15 minutes or longer remains below pH 5.5 or when each pH value of four consecutive grab samples collected at 15-minute intervals or longer within a 24-hour period remains below pH 5.5.

The water being discharged will not do the following:

- Violate any discharge standard, limitation, or specific prohibition of King County Code 28.84.060 or local discharge limits applicable on the date of discharge (see Section 28.84.060.D-F of the King County Code).
- Contain the odor of solvent, gasoline, or hydrogen sulfide (rotten egg odor), oil sheen, unusual color, or visible turbidity.
- Cause hydraulic overloading conditions of the sewerage conveyance system. During periods of peak hydraulic loading, KCIW or local sewer agency representatives reserve the authority to request that discharge to the sewer be stopped.

You must stop discharging and notify KCIW, by phone at 206-477-5300 or email at info.KCIW@kingcounty.gov, if you exceed any of the discharge limits, or notice odor of solvent, gasoline, or hydrogen sulfide (rotten egg odor), oil sheen, unusual color, or visible turbidity.

Monitoring Requirements

You shall conduct the following self-monitoring requirements for this authorization.

Parameter	Frequency	Sample Type/Method
Discharge volume	Daily	In-line flow meter
Discharge rate	Daily	In-line flow meter
Settleable solids	Daily	Grab by Imhoff cone[1]

All tests, measurements and analyses shall be performed in accordance with procedures established by the administrator of the U.S. Environmental Protection Agency (EPA) pursuant to section 304(g) of the federal Clean Water Act and contained in 40 CFR Part 136 and amendments thereto or with any other test procedure approved in writing by the EPA administrator, and/or KCIW.

Records Management

You will maintain records relating to all permitted discharges to the King County sewerage system including but not limited to routine maintenance, waste disposal dates, manifests, any analytical lab results, monitoring records, and flow records

All records required must be available for review by KCIW and must be kept through the completion of the project.

[1] The settleable solids field test by Imhoff cone must be performed as follows:
- Fill cone to one-liter mark with well-mixed sample.
- Allow 45 minutes to settle.
- Gently stir sides of cone with a rod or by spinning. Settle 15 minutes longer.
- Record volume of settleable matter in the cone as mL/L.

Special Conditions

You must implement erosion control best management practices to minimize the amount of solids discharged to the sanitary sewer system. As a minimum precaution, the construction dewatering must be pumped to an appropriately sized settling tank prior to entering the sewer system.

The authorization to discharge is based on your agreement and signed application to comply with the minimum standards outlined in *Minimum Standards for Rectangular Sedimentation Tank Design and Technical memorandum* found on county's webpage[1].

The following two sedimentation tank options may be used, depending on site conditions and project requirements:

1. Rectangular Sedimentation Tank (Flow-Through Discharge)

   The minimum required standards for the flow-through system are:

   - Minimum hydraulic retention time: ≥ 90 minutes
   - Minimum length-to-width ratio (length : width): ≥ 4:1
   - Maximum overflow rate (gallons-per-minute per square foot of surface area): ≤ 1.0 gpm/ft^2
   - Maximum sediment accumulation (level of sedimentation tank water column): ≤ 25%
   - Requirement to add additional sedimentation tanks in parallel for higher flow rates[2].

2. Circular Sedimentation Tank (Batch Discharge):

   At some smaller construction sites, process wastewater is produced intermittently. The minimum required standards for batch discharge area as follows:

   - Minimum 5,000 gallon circular tank, which can accommodate a maximum of five batch discharges per day.
   - At least one hour of quiescent (undisturbed) settling must occur in the tank prior to discharge. During this settling time, no additional process wastewater can be added to the sedimentation tank.
   - Maximum sediment accumulation (level of sedimentation tank water column): ≤ 25%

---

[1] http://www.kingcounty.gov/environment/wastewater/IndustrialWaste/GettingDischargeApproval/Construction/Sedimentation_tanks.aspx.

[2] Example: At 200 gpm flow, to meet the Minimum hydraulic retention time of ≥ 90 minutes, you need a minimum of 18,000 gallons rectangular tank (18,000 gal / 200 gal/min = 90 minute hydraulic retention time). Correspondingly, at 100-gpm flow, you need a 9,000-gallon tank, and at 65 gpm, the tank volume shall be 5850 gallons. If gravity discharge from the tank is not possible, the effective volume of the tank needs to be reduced to the level of the pump intake and under no circumstances can the pump intake be lower than one-half (1/2) of the tank height.

The permittee shall properly operate and maintain all wastewater treatment units to ensure compliance with established discharge limits. Solids accumulation in tanks used for solids settling shall not exceed 25 percent of the tank's working hydraulic capacity. Each tank's working hydraulic capacity is based on the water column height as measured from the bottom of the tank to either the invert elevation of the tank's outlet pipe (gravity discharges) or discharge pump intake (pumped discharges).

General Information

King County Code 28.84 authorizes a fee for each Letter of Authorization issued by the King County Department of Natural Resources and Parks. The current fee for issuance of a Letter of Authorization is $800. King County will send an invoice for this amount.

If you have any questions about this authorization or your construction dewatering discharge, please call us at 206-477-5300, or email us at info.KCIW@kingcounty.gov. You may also visit our program's Internet pages at www.kingcounty.gov/industrialwaste.

Thank you for helping support our mission to protect public health and enhance the environment.

Sincerely,

Despina Strong
Industrial Waste Program Manager

cc: Katy Coleman, City of Kirkland

King County
Wastewater Treatment Division
Industrial Waste Program
Department of Natural Resources and Parks
201 South Jackson Street, Suite 513
Seattle, WA 98104-3855
206-477-5300 Fax 206-263-3001
TTY Relay: 711

January 30, 2017

Michael O. Moore
DTSJ Holdings, LLC
422 Bayview Blvd
Newport, WA 99156

General Letter of Authorization – Construction: # 40091-01 for DTSJ Holdings, LLC - Chick-fil-A Construction Project to Discharge to the King County Sanitary Sewer

Dear Mr. Michael O. Moore:

In accordance with King County Code 28.84.060, King County Industrial Waste Program (KCIW) authorizes the discharge of construction dewatering/process wastewater to the King County sanitary sewer from the DTSJ Holdings, LLC - Chick-fil-A Construction Project located at 12106 NE 124th Street, Kirkland, WA 98034. This project is required to meet all the limitations, monitoring requirements, and other conditions specified in this authorization.

This authorization is the only KCIW authorization that will be issued for the project identified in your application. This authorization is issued for the maximum duration of two years. It is valid from February 2, 2017, through February 1, 2019, or the duration of this project, whichever comes first. It is the permittee's responsibility to notify KCIW of project closure or any changes with this project.

This authorization alone does not allow you to discharge to the sanitary sewer. You must contact the local sewer agency to obtain approval along with a discharge location before discharging to the sanitary sewer. Wastewater from this project must be discharged to/at the location(s) specified by the local sewer agency. The local sewer agency will assess sewer charges, set flow rate restrictions and may impose additional requirements.

General Conditions

All discharges and activities approved by this authorization shall be consistent with King County Code 28.84.060 and the terms and conditions outlined in this authorization. A copy of this discharge approval, as well as required daily monitoring records, shall be on site and available for review and reference by KCIW or local sewer agency representatives.
This authorization to discharge is based on your agreement and signed application.

This authorization permits the discharge of up to 25,000 gallons per day (gpd) of construction dewatering from the construction site into the sanitary sewer. Discharging pollutants more frequently or in higher concentrations or quantity than authorized in this letter is a violation of the terms and conditions of this authorization. You must contact KCIW in advance and receive authorization before making changes beyond the terms and conditions of this authorization. Examples of changes include:

- Construction dewatering volume above 25,000 gpd.
- Site's surface area generates contaminated stormwater that exceeds one acre in aggregate.
- Site conditions indicate potential for chemical contamination.
- Substantial changes in the quality of the discharged water.
- Discharge of wastes or contaminants from sources other than those permitted herein.

This permit does not constitute authority for discharge into waters of the state. Any such discharge is subject to enforcement action by the Washington State Department of Ecology.

You must allow authorized representatives of KCIW to enter, inspect, and sample as specified in King County Code 28.84.060.L, "Inspection and Sampling of Industrial Users."

You must install an accessible sampling spigot on the discharge pipe from the last treatment unit of the wastewater treatment system. The sample site shall be representative of all industrial waste streams discharged to the sewer from this project. Each sample site shall be accessible to KCIW representatives when discharge to the sewer is occurring.

You must install a totalizing, non-resettable flow meter on all permitted discharge pipes to the sewer or as approved by your local sewer agency. The meters shall account for all industrial waste streams discharged to the sewer from this site.

Discharge Limitations

Parameter	**Limitation**
Instantaneous maximum discharge rate	To be determined by local sewer agency. Not to exceed 200 gallons per minute or the sedimentation tank flow restriction, whichever is more stringent.
Maximum daily discharge volume	25,000 gpd
Settleable solids	7.0 mL/L
Nonpolar fats, Oil & Grease (FOG)	100 mg/L
pH Minimum	5.5 s.u.
pH Maximum	12 s.u.
Soluble Sulfides (Screening Level)	0.1 mg/L

The water being discharged will not do the following:

- Violate any discharge standard, limitation, or specific prohibition of King County Code 28.84.060 or local discharge limits applicable on the date of discharge (see Section 28.84.060.D-F of the King County Code).
- Contain the odor of solvent, gasoline, or hydrogen sulfide (rotten egg odor), oil sheen, unusual color, or visible turbidity.
- Cause hydraulic overloading conditions of the sewerage conveyance system. During periods of peak hydraulic loading, KCIW or local sewer agency representatives reserve the authority to request that discharge to the sewer be stopped.

You must stop discharging and notify KCIW, by phone at 206-477-5300 or email at info.KCIW@kingcounty.gov, if you exceed any of the discharge limits, or notice odor of solvent, gasoline, or hydrogen sulfide (rotten egg odor), oil sheen, unusual color, or visible turbidity.

Monitoring Requirements

You shall conduct the following self-monitoring requirements for this authorization.

Parameter	Frequency	Sample Type/Method
Discharge volume	Daily	In-line flow meter
Discharge rate	Daily	In-line flow meter
Settleable solids	Daily	Grab by Imhoff cone[1]

All tests, measurements and analyses shall be performed in accordance with procedures established by the administrator of the U.S. Environmental Protection Agency (EPA) pursuant to section 304(g) of the federal Clean Water Act and contained in 40 CFR Part 136 and amendments thereto or with any other test procedure approved in writing by the EPA administrator, and/or KCIW.

Records Management

You will maintain records relating to all permitted discharges to the King County sewerage system including but not limited to routine maintenance, waste disposal dates, manifests, any analytical lab results, monitoring records, and flow records

All records required must be available for review by KCIW and must be kept through the completion of the project.

---

[1] The settleable solids field test by Imhoff cone must be performed as follows:
- Fill cone to one-liter mark with well-mixed sample.
- Allow 45 minutes to settle.
- Gently stir sides of cone with a rod or by spinning. Settle 15 minutes longer.
- Record volume of settleable matter in the cone as mL/L.

Special Conditions

You must implement erosion control best management practices to minimize the amount of solids discharged to the sanitary sewer system. As a minimum precaution, the construction dewatering must be pumped to an appropriately sized settling tank prior to entering the sewer system.

The authorization to discharge is based on your agreement and signed application to comply with the minimum standards outlined in *Minimum Standards for Rectangular Sedimentation Tank Design and Technical memorandum* found on county's webpage[2].

The following two sedimentation tank options may be used, depending on site conditions and project requirements:

1. Rectangular Sedimentation Tank (Flow-Through Discharge)

   The minimum required standards for the flow-through system are:

   - Minimum hydraulic retention time: ≥ 90 minutes
   - Minimum length-to-width ratio (length : width): ≥ 4:1
   - Maximum overflow rate (gallons-per-minute per square foot of surface area): ≤ 1.0 gpm/ft^2
   - Maximum sediment accumulation (level of sedimentation tank water column): ≤ 25%
   - Requirement to add additional sedimentation tanks in parallel for higher flow rates[3].

2. Circular Sedimentation Tank (Batch Discharge):

   At some smaller construction sites, process wastewater is produced intermittently. The minimum required standards for batch discharge area as follows:

   - Minimum 5,000 gallon circular tank, which can accommodate a maximum of five batch discharges per day.
   - At least one hour of quiescent (undisturbed) settling must occur in the tank prior to discharge. During this settling time, no additional process wastewater can be added to the sedimentation tank.
   - Maximum sediment accumulation (level of sedimentation tank water column): ≤ 25%

---

[2] http://www.kingcounty.gov/environment/wastewater/IndustrialWaste/GettingDischargeApproval/Construction/Sedimentation_tanks.aspx.

[3] Example: At 200 gpm flow, to meet the Minimum hydraulic retention time of ≥ 90 minutes, you need a minimum of 18,000 gallons rectangular tank (18,000 gal / 200 gal/min = 90 minute hydraulic retention time). Correspondingly, at 100-gpm flow, you need a 9,000-gallon tank, and at 65 gpm, the tank volume shall be 5850 gallons. If gravity discharge from the tank is not possible, the effective volume of the tank needs to be reduced to the level of the pump intake and under no circumstances can the pump intake be lower than one-half (1/2) of the tank height.

The permittee shall properly operate and maintain all wastewater treatment units to ensure compliance with established discharge limits. Solids accumulation in tanks used for solids settling shall not exceed 25 percent of the tank's working hydraulic capacity. Each tank's working hydraulic capacity is based on the water column height as measured from the bottom of the tank to either the invert elevation of the tank's outlet pipe (gravity discharges) or discharge pump intake (pumped discharges).

General Information

King County Code 28.84 authorizes a fee for each Letter of Authorization issued by the King County Department of Natural Resources and Parks. The current fee for issuance of a Letter of Authorization is $800. King County will send an invoice for this amount.

If you have any questions about this authorization or your construction dewatering discharge, please call us at 206-477-5300, or email us at info.KCIW@kingcounty.gov. You may also visit our program's Internet pages at www.kingcounty.gov/industrialwaste.

Thank you for helping support our mission to protect public health and enhance the environment.

Sincerely,

Despina Strong
Industrial Waste Program Manager

Enclosure

cc: Katy Coleman, City of Kirkland

King County
Wastewater Treatment Division
Industrial Waste Program
Department of Natural Resources and Parks
201 South Jackson Street, Suite 513
Seattle, WA 98104-3855
206-477-5300 Fax 206-263-3001
TTY Relay: 711

July 13, 2017

Robb A. Dibble
Dibble Engineers
1029 Market Street
Kirkland, WA 98033

Letter of Authorization 11778-01 to Discharge to the Sanitary Sewer

Dear Mr. Dibble:

The King County Industrial Waste Program (KCIW) has reviewed your request to discharge construction dewatering to the sanitary sewer from the Dibble Engineers - Market Street Construction Project located at 1029 Market Street, Kirkland, Washington. In accordance with King County Code 28.84.060, KCIW grants approval for the discharge of up to 18,000 gallons per day from July 17, 2017, through July 16, 2019, provided that you meet the discharge limitations, special conditions, and monitoring requirements listed below.

Discharge Limitations

Discharge rate	100 gallons per minute (gpm)
Maximum daily discharge volume	18,000 gallons per day (gpd)
Settleable solids (by Imhoff cone)	7.0 mL/L
Benzene	0.07 mg/L
Toluene	1.4 mg/L
Ethylbenzene	1.7 mg/L
Total xylenes	2.2 mg/L
Nonpolar fats, oils, and grease (FOG)	100 mg/L
Instantaneous minimum pH[1]	5.0 s.u.
Daily minimum pH[2]	5.5 s.u.
pH maximum	12.0 s.u.

[1] The instantaneous minimum pH limit is violated whenever any single grab sample or any instantaneous recording is less than pH 5.0.

[2] The daily minimum pH limit is violated whenever any continuous recording of 15 minutes or longer remains below pH 5.5 or when each pH value of four consecutive grab samples collected at 15-minute intervals or longer within a 24-hour period remains below pH 5.5.

There shall be no odor of solvent, gasoline, or hydrogen sulfide (rotten egg odor), oil sheen, or unusual color. If you exceed any of the discharge limits, you must stop discharging and notify KCIW by calling 206-477-5300.

Special Conditions

1. The discharge shall not cause hydraulic overloading conditions of the sewerage conveyance system. During periods of peak hydraulic loading, KCIW and City of Kirkland representatives reserve the authority to request that discharge to the sewer be stopped.

2. This document permits the discharge of limited amounts of construction dewatering from the construction site into the sanitary sewer. Wastes or contaminants from sources other than permitted herein shall not be discharged to the sanitary sewer without prior approval from KCIW.

3. The contractor shall implement erosion control best management practices to minimize the amount of solids discharged to the sanitary sewer system. As a minimum precaution, the wastewater must be pumped to an appropriately sized settling tank prior to entering the sewer system.

4. Solids accumulation in tanks used for solids settling shall not exceed 25 percent of the tank's working hydraulic capacity. Each tank's working hydraulic capacity is based on the water column height as measured from the bottom of the tank to either the invert elevation of the tank's outlet pipe (gravity discharges) or discharge pump intake (pumped discharges).

5. A totalizing, non-resettable flow meter shall be installed on the discharge pipe from the wastewater treatment system to the approved point of discharge.

6. Discharge point is an existing side sewer cleanout or as otherwise designated by City of Kirkland representatives.

7. Wastewater monitoring logs containing the results of the required field monitoring specified below must be maintained on site and must be available for review at reasonable times by authorized representatives of KCIW.

8. A copy of this discharge approval shall be on site at all times for review and reference.

Monitoring Requirements

You shall conduct the following self-monitoring requirements for this authorization:

Parameter	Frequency	Sample Type/Method
Discharge volume	Daily	In-line flow meter
Discharge rate	Daily	In-line flow meter
Settleable solids	Daily	Grab by Imhoff cone[1]
pH	Daily	Hand-held meter

[1]The settleable solids field test by Imhoff cone must be performed as follows:

- Fill cone to one-liter mark with well-mixed sample.
- Allow 45 minutes to settle.
- Gently stir sides of cone with a rod or by spinning. Settle 15 minutes longer.
- Record volume of settleable matter in the cone as mL/L.

Records Management

You will maintain records relating to all permitted discharges to the King County sewerage system including but not limited to routine maintenance, waste disposal dates, manifests, any analytical lab results, monitoring records, and flow records. All records required must be available for review by KCIW and must be kept through the completion of the project.

If you propose to increase the volume of your discharge or change the type or quantities of substances discharged, you must contact KCIW at least 60 days before making these changes.

King County Code 28.84 authorizes a fee for each Letter of Authorization issued by the King County Department of Natural Resources and Parks. The current fee for issuance of a Letter of Authorization is $950. King County will send you an invoice for this amount.

If you have any questions about this authorization or your construction dewatering discharge, please call me at 206-477-5476 or email me at ryan.salem@kingcounty.gov. You may also wish to visit our program's Internet pages at: www.kingcounty.gov/industrialwaste.

Sincerely,

Ryan Salem
Compliance Investigator

Enclosure

cc: Joshua Pantzke, City of Kirkland

King County
Wastewater Treatment Division
Industrial Waste Program
Department of Natural Resources and Parks
201 South Jackson Street, Suite 513
Seattle, WA 98104-3855
206-477-5300 Fax 206-263-3001
TTY Relay: 711

July 25, 2017

Bob Baldwin
Eastside Preparatory School
10613 Ne 38th Pl.
Kirkland,WA 98033

General Letter of Authorization - Construction: # 40114-01 for Eastside Preparatory School - Schuchart Corporation - TALI Hall Construction Project to Discharge to the King County Sanitary Sewer

Dear Mr. Bob Baldwin:

In accordance with King County Code 28.84.060, King County Industrial Waste Program (KCIW) authorizes the discharge of construction dewatering/process wastewater to the King County sanitary sewer from the Eastside Preparatory School - Schuchart Corporation - TALI Hall Construction Project located at 10613 NE 38th Place, Kirkland, WA 98033. This project is required to meet all the limitations, monitoring requirements, and other conditions specified in this authorization.

This authorization is the only KCIW authorization that will be issued for the project identified in your application. This authorization is issued for the maximum duration of two years. It is valid from July 31, 2017, through July 30, 2019, or the duration of this project, whichever comes first. It is the permittee's responsibility to notify KCIW of project closure or any changes with this project.

This authorization alone does not allow you to discharge to the sanitary sewer. You must contact the local sewer agency to obtain approval along with a discharge location before discharging to the sanitary sewer. Wastewater from this project must be discharged to/at the location(s) specified by the local sewer agency. The local sewer agency will assess sewer charges, set flow rate restrictions and may impose additional requirements.

General Conditions

All discharges and activities approved by this authorization shall be consistent with King County Code 28.84.060 and the terms and conditions outlined in this authorization. A copy of this discharge approval, as well as required daily monitoring records, shall be on site and available for review and reference by KCIW or local sewer agency representatives.
This authorization to discharge is based on your agreement and signed application.

This authorization permits the discharge of up to 25,000 gallons per day (gpd) of construction dewatering from the construction site into the sanitary sewer. Discharging pollutants more frequently or in higher concentrations or quantity than authorized in this letter is a violation of the terms and conditions of this authorization. You must contact KCIW in advance and receive authorization before making changes beyond the terms and conditions of this authorization. Examples of changes include:

- Construction dewatering volume above 25,000 gpd.
- Site's surface area generates contaminated stormwater that exceeds one acre in aggregate.
- Site conditions indicate potential for chemical contamination.
- Substantial changes in the quality of the discharged water.
- Discharge of wastes or contaminants from sources other than those permitted herein.

This permit does not constitute authority for discharge into waters of the state. Any such discharge is subject to enforcement action by the Washington State Department of Ecology.

You must allow authorized representatives of KCIW to enter, inspect, and sample as specified in King County Code 28.84.060.L, "Inspection and Sampling of Industrial Users."

You must install an accessible sampling spigot on the discharge pipe from the last treatment unit of the wastewater treatment system. The sample site shall be representative of all industrial waste streams discharged to the sewer from this project. Each sample site shall be accessible to KCIW representatives when discharge to the sewer is occurring.

You must install a totalizing, non-resettable flow meter on all permitted discharge pipes to the sewer or as approved by your local sewer agency. The meters shall account for all industrial waste streams discharged to the sewer from this site.

Discharge Limitations

Parameter	Limitation
Instantaneous maximum discharge rate	To be determined by local sewer agency. Not to exceed 200 gallons per minute or the sedimentation tank flow restriction, whichever is more stringent.
Maximum daily discharge volume	25,000 gpd
Settleable solids	7.0 mL/L
Nonpolar Fats, Oil & Grease (FOG)	100 mg/L
Instantaneous Minimum pH[1]	5.0 s.u.
Daily Minimum pH[2]	5.5 s.u.
Maximum pH	12 s.u.
Soluble Sulfides (Screening Level)	0.1 mg/L

[1] The instantaneous minimum pH limit is violated whenever any single grab sample or any instantaneous recording is less than pH 5.0.

[2] The daily minimum pH limit is violated whenever any continuous recording of 15 minutes or longer remains below pH 5.5 or when each pH value of four consecutive grab samples collected at 15-minute intervals or longer within a 24-hour period remains below pH 5.5.

The water being discharged will not do the following:

- Violate any discharge standard, limitation, or specific prohibition of King County Code 28.84.060 or local discharge limits applicable on the date of discharge (see Section 28.84.060.D-F of the King County Code).
- Contain the odor of solvent, gasoline, or hydrogen sulfide (rotten egg odor), oil sheen, unusual color, or visible turbidity.
- Cause hydraulic overloading conditions of the sewerage conveyance system. During periods of peak hydraulic loading, KCIW or local sewer agency representatives reserve the authority to request that discharge to the sewer be stopped.

You must stop discharging and notify KCIW, by phone at 206-477-5300 or email at info.KCIW@kingcounty.gov, if you exceed any of the discharge limits, or notice odor of solvent, gasoline, or hydrogen sulfide (rotten egg odor), oil sheen, unusual color, or visible turbidity.

Monitoring Requirements

You shall conduct the following self-monitoring requirements for this authorization.

Parameter	Frequency	Sample Type/Method
Discharge volume	Daily	In-line flow meter
Discharge rate	Daily	In-line flow meter
Settleable solids	Daily	Grab by Imhoff cone[1]

All tests, measurements and analyses shall be performed in accordance with procedures established by the administrator of the U.S. Environmental Protection Agency (EPA) pursuant to section 304(g) of the federal Clean Water Act and contained in 40 CFR Part 136 and amendments thereto or with any other test procedure approved in writing by the EPA administrator, and/or KCIW.

Records Management

You will maintain records relating to all permitted discharges to the King County sewerage system including but not limited to routine maintenance, waste disposal dates, manifests, any analytical lab results, monitoring records, and flow records

All records required must be available for review by KCIW and must be kept through the completion of the project.

---

[1] The settleable solids field test by Imhoff cone must be performed as follows:
- Fill cone to one-liter mark with well-mixed sample.
- Allow 45 minutes to settle.
- Gently stir sides of cone with a rod or by spinning. Settle 15 minutes longer.
- Record volume of settleable matter in the cone as mL/L.

Special Conditions

You must implement erosion control best management practices to minimize the amount of solids discharged to the sanitary sewer system. As a minimum precaution, the construction dewatering must be pumped to an appropriately sized settling tank prior to entering the sewer system.

The authorization to discharge is based on your agreement and signed application to comply with the minimum standards outlined in *Minimum Standards for Rectangular Sedimentation Tank Design and Technical memorandum* found on county's webpage[1].

The following two sedimentation tank options may be used, depending on site conditions and project requirements:

1. Rectangular Sedimentation Tank (Flow-Through Discharge)

   The minimum required standards for the flow-through system are:

   - Minimum hydraulic retention time: ≥ 90 minutes
   - Minimum length-to-width ratio (length : width): ≥ 4:1
   - Maximum overflow rate (gallons-per-minute per square foot of surface area): ≤ 1.0 gpm/ft^2
   - Maximum sediment accumulation (level of sedimentation tank water column): ≤ 25%
   - Requirement to add additional sedimentation tanks in parallel for higher flow rates[2].

2. Circular Sedimentation Tank (Batch Discharge):

   At some smaller construction sites, process wastewater is produced intermittently. The minimum required standards for batch discharge area as follows:

   - Minimum 5,000 gallon circular tank, which can accommodate a maximum of five batch discharges per day.
   - At least one hour of quiescent (undisturbed) settling must occur in the tank prior to discharge. During this settling time, no additional process wastewater can be added to the sedimentation tank.
   - Maximum sediment accumulation (level of sedimentation tank water column): ≤ 25%

---

[1] http://www.kingcounty.gov/environment/wastewater/IndustrialWaste/GettingDischargeApproval/Construction/Sedimentation_tanks.aspx.

[2] Example: At 200 gpm flow, to meet the Minimum hydraulic retention time of ≥ 90 minutes, you need a minimum of 18,000 gallons rectangular tank (18,000 gal / 200 gal/min = 90 minute hydraulic retention time). Correspondingly, at 100-gpm flow, you need a 9,000-gallon tank, and at 65 gpm, the tank volume shall be 5850 gallons. If gravity discharge from the tank is not possible, the effective volume of the tank needs to be reduced to the level of the pump intake and under no circumstances can the pump intake be lower than one-half (1/2) of the tank height.

The permittee shall properly operate and maintain all wastewater treatment units to ensure compliance with established discharge limits. Solids accumulation in tanks used for solids settling shall not exceed 25 percent of the tank's working hydraulic capacity. Each tank's working hydraulic capacity is based on the water column height as measured from the bottom of the tank to either the invert elevation of the tank's outlet pipe (gravity discharges) or discharge pump intake (pumped discharges).

General Information

King County Code 28.84 authorizes a fee for each Letter of Authorization issued by the King County Department of Natural Resources and Parks. The current fee for issuance of a Letter of Authorization is $800. King County will send an invoice for this amount.

If you have any questions about this authorization or your construction dewatering discharge, please call us at 206-477-5300, or email us at info.KCIW@kingcounty.gov. You may also visit our program's Internet pages at www.kingcounty.gov/industrialwaste.

Thank you for helping support our mission to protect public health and enhance the environment.

Sincerely,

Despina Strong
Industrial Waste Program Manager

cc: Greg Neumann, City of Kirkland

King County

Wastewater Treatment Division
Industrial Waste Program
Department of Natural Resources and Parks
201 South Jackson Street, Suite 513
Seattle, WA 98104-3855
206-477-5300 Fax 206-263-3001
TTY Relay: 711

May 16, 2016

Eric Jerochim
Havlik's Radiator Service Inc.
11851 124th Ave. NE
Kirkland, WA 98034

Letter of Authorization 11699-01 to Discharge to the Sanitary Sewer

Dear Mr. Jerochim:

The King County Industrial Waste Program (KCIW) has reviewed your May 26, 2015, application requesting authorization to discharge wastewater from the radiator repair operation at Havlik's Radiator Service Inc. located at 11851 124th Avenue Northeast, Kirkland, Washington, to the sanitary sewer. In accordance with King County Code 28.84.060 (available at: www.kingcounty.gov/council/legislation/kc_code.aspx), KCIW grants approval for the discharge of up to 300 gallons per day from June 1, 2016, through May 31, 2021, provided that you meet the discharge limitations, special conditions, monitoring and reporting requirements listed below.

Discharge Limitations

The industrial user shall not discharge wastes, which exceed the following limitations:

Heavy Metals & Cyanide	Daily Maximum ppm (mg/L)[1]
Arsenic	4.0
Cadmium	0.6
Chromium	5.0
Copper	8.0
Lead	4.0
Mercury	0.2
Nickel	5.0
Silver	3.0
Zinc	10.0
Cyanide	3.0

[1] The daily maximum is violated whenever any sample exceeds the limitation.

Fats, Oils, & Grease	Average of 3 grabs (mg/L)[1]
Nonpolar FOG	100

There shall be no odor of solvent, gasoline, or hydrogen sulfide (rotten egg odor), oil sheen, unusual color, or visible turbidity. The discharge must remain translucent. If you exceed any of the discharge limits, you must stop discharging and notify KCIW by calling 206-477-5300.

Special Conditions

A) All wastewater generated from the radiator rinse station and wastewater that has collected in the sump shall pass through the treatment system before discharge to the sanitary sewer system.

B) The treatment system shall be maintained and operated so that wastewater meets King County Local Limits.

C) All solids shall be disposed of in compliance with all applicable federal and state regulations.

D) All records of disposal shall be maintained on site for at least three years.

If you propose to increase the volume of your discharge or change the type or quantities of substances discharged, you must contact KCIW at least 60 days before making these changes.

King County Code 28.84 authorizes a fee for each Letter of Authorization issued by the King County Department of Natural Resources and Parks. The current fee for issuance of a Letter of Authorization is $750. King County will send an invoice for this amount.

[1] The limit for nonpolar FOG is violated when the arithmetic mean of the concentration of three grab samples, taken no more frequently than at five minute intervals, or when the results of a composite sample exceed the limitation.

If you have any questions about this authorization or your wastewater discharge, please call me at 206-477-5476 or email me at Ryan.Salem@kingcounty.gov. You may also wish to visit our program's Internet pages at: www.kingcounty.gov/industrialwaste.Thank you for helping to support our mission to protect public health and enhance the environment.

Sincerely,

Ryan Salem
Compliance Investigator

cc: Bobbi Wallace, City of Kirkland

King County
Wastewater Treatment Division
Industrial Waste Program
Department of Natural Resources and Parks
201 South Jackson Street, Suite 513
Seattle, WA 98104-3855
206-477-5300 Fax 206-263-3001
TTY Relay: 711

June 2, 2017

CERTIFIED MAIL
RETURN RECEIPT REQUESTED

Pat McLaughlin
King County SWD
201 South Jackson St., Suite 700
Seattle, WA 98104

Issuance of Wastewater Discharge Authorization No. 4423-01 to King County Solid Waste Division - Houghton Transfer Station

Dear Mr. McLaughlin:

The King County Industrial Waste Program (KCIW) has reviewed your application to discharge industrial wastewater to the sewer system from the King County Solid Waste Division (KCSWD) – Houghton Transfer Station facility located at 11724 NE 60th Street, Kirkland, Washington, and has issued the enclosed Major Discharge Authorization. The enclosed Discharge Authorization No. 4423-01 supersedes and cancels Permit No. 7879-01, effective August 1, 2017.

KCIW has downgraded your facility from a Permit to a Major Discharge Authorization as you have made structural upgrades to your treatement system to address dissolved sulfide issues. In addition:

- Your facility is not subject to categorical pretreatment regulations.
- The average daily discharge volume each month averages less than 20,145 gallons per day which does not exceed 25,000 gallons per day.
- Discharges from your facility do not have a reasonable potential to harm the publicly owned treatment works.

This authorization permits you to discharge limited amounts of industrial wastewater into King County's sewer system in accordance with the effluent limitations and other requirements and conditions set forth in the document and the regulations outlined in King County Code 28.84.060 (enclosed). As long as you maintain compliance with regulations and do not change the nature and volume of your discharge, KCIW will not require you to apply

for an industrial wastewater discharge permit, a type of approval that would result in additional requirements and increased fees.

If you propose to increase the volume of your discharge or change the type or quantities of substances discharged, you must contact KCIW at least 60 days before making these changes.

King County Code 28.84 authorizes a fee for each Major Discharge Authorization issued by the King County Department of Natural Resources and Parks. The current fee for issuance of a Major Discharge Authorization is $2750. King County will send you an invoice for this amount.

If you have any questions about this discharge authorization or your wastewater discharge, please call me at 206-477-5476 or email me at Ryan.Salem@kingcounty.gov. You may also wish to visit our program's Internet pages at: www.kingcounty.gov/industrialwaste.

Thank you for helping support our mission to protect public health and enhance the environment.

Sincerely,

Ryan Salem
Compliance Investigator

Enclosures

cc: Greg Neumann, City of Kirkland

King County

MAJOR DISCHARGE AUTHORIZATION
King County Industrial Waste Program
201 S. Jackson Street, Suite 513
Seattle, WA 98104-3855

NUMBER 4423-01

for

King County SWD - Houghton Transfer Station

Facility address: 11724 NE 60th Street
Kirkland, WA 98033

Mailing address: 201 South Jackson St., Suite 700
Seattle, WA 98104

Phone: 206-477-4501

Emergency (24-hour) phone: 206-477-4466

Industry type: Solid Waste Transfer Facility

SIC code: 4953 **EPA Id. No.:** NA

Discharge to: South Treatment Plant

*Note: This authorization is valid only for the specific discharges shown below:

Discharge process: Wastewater generated by solid waste transfer facility

Effective date: August 1, 2017
Expiration date: July 31, 2022

DESCRIPTION OF SAMPLE SITES AND DISCHARGE VOLUMES

Sample Site No.	Description	Maximum Daily Discharge Volume (gallons per day)	Maximum Average Daily Dishcharge Volume per Month (gallons per day)
A30501	Lift Station Wet Well	78,000	25,000

Permission is hereby granted to discharge industrial wastewater from the above-identified facility into the King County sewer system in accordance with the effluent limitations and monitoring requirements set forth in this authorization.

If the industrial user wishes to continue to discharge after the expiration date, an application must be filed for re-issuance of this discharge authorization at least 90 days prior to the expiration date. For information concerning this King County Discharge Authorization, please call Industrial Waste Compliance Investigator Ryan Salem at 206-477-5476.

24-HOUR EMERGENCY NOTIFICATION
South Treatment Plant: 206-263-1760
Washington State Department of Ecology: 425-649-7000

SPECIAL CONDITIONS

A. Screening Level for Soluble Sulfide

1. Discharges that exceed the soluble sulfide screening level of 0.1 milligrams per liter (mg/L) have the potential to cause occupational health hazards in the sewage collection system or indicate that treatment has not been sufficient enough to remove hazardous waste characteristics.

2. Determination of the soluble sulfide concentration using an approved field test kit is acceptable.

3. For each exceedance of the screening level the permittee shall:

   a. Take immediate action to stop the exceedance and notify KCIW within 24 hours of learning of the exceedance

   b. Collect a sample and submit new data to KCIW within 14 days of becoming aware of the exceedance (or the next time discharge occurs if greater than 14 days)

   c. Submit a written report within 14 days of learning of the exceedance (14-Day Report)

   d. The report should explain the cause of the exceedance and corrective actions taken to respond to the sulfide exceedance and ensure ongoing compliance

4. The following conditions apply whenever KCIW monitoring or the permittee's self-monitoring results exceed the screening level for three out of four consecutive sampling events:

   a. The permittee shall submit a plan indicating the steps that will be taken to ensure that discharges do not exceed screening levels.

   b. This plan shall be submitted within 30 days from the third measurement indicating that the discharge exceeded the screening level, and indicate the steps that will be taken to reduce soluble sulfide concentrations so that they remain consistently below screening levels within 60 days.

5. If the submitted plan (required in Item 4) does not result in continued compliance with the screening limit, KCIW may require further action, which may include performing atmospheric hydrogen sulfide monitoring at a manhole designated by KCIW to assess for compliance with the King County local discharge limit of 10.0 parts per million, and/or establishing a soluble sulfide limit.

B. **Sample Site**

For safety concerns, the permittee and King County Industrial Waste Program (KCIW) sampling personnel will have the option of collecting samples from the KCIW sample site A30501 (the location identified in the permit as "discharge from lift station wet well") or collect samples at a manhole located in an adjacent parking lot northeast of the transfer station.

C. KCSWD must maintain the aeration system in the lift station wet well so that effluent does not exceed the screening level for dissolved sulfide. The aeration system shall be inspected weekly to ensure it is functioning properly.

D. KCSWD shall maintain records relating to all permitted discharges to the King County sewerage system including routine maintenance, waste disposal dates, manifests, self-monitoring reports, analytical lab results, field test results and flow records.

E. All records required by the permit shall be available for review at reasonable times by authorized representatives of KCIW.

F. Records of all such testing shall be retained for a period of three years unless litigation or the direction of KCIW requires an extension of that time.

SELF-MONITORING REQUIREMENTS

A. The following self-monitoring requirements shall be met for this discharge authorization:

Sample Site No.	Parameter	Sample Type	Frequency
A30501	Arsenic, Total	Grab	Quarterly
	Cadmium, Total	Grab	Quarterly
	Chromium, Total	Grab	Quarterly
	Copper, Total	Grab	Quarterly
	Lead, Total	Grab	Quarterly
	Nickel, Total	Grab	Quarterly
	Silver, Total	Grab	Quarterly
	Zinc, Total	Grab	Quarterly
	Nonpolar fats, oils, and grease	3 Grabs	Quarterly
	Dissolved Sulfide	Grab (field)	Quarterly
	pH	Grab (field)	Quarterly
	Discharge Rate	Continuous	Quarterly
	Total Monthly Flow	Continuous	Monthly
	Settleable solids	Grab (by Imhoff cone)	Only if operating criteria are exceeded
	Explosivity	Meter reading	Only if operating criteria are exceeded

B. The settleable solids field test by Imhoff cone must be performed as follows:

1. Fill Imhoff cone to one-liter mark with well-mixed sample
2. Allow 45 minutes to settle
3. Gently stir sides of cone with a rod or by spinning; settle 15 minutes longer
4. Record volume of settleable matter in the cone as mL/L

C. The three nonpolar fats, oils, and grease (FOG) grab samples shall be of equal volume, collected at least five minutes apart, and analyzed separately. When using U.S. Environmental Protection Agency approved protocols specified in 40 CFR Part 136, the individual grab samples may be composited (at the laboratory) prior to analysis. The result of the composite sample or the average of the concentrations of the three grab samples may be reported as Total FOG unless the value is 100 mg/L or greater, in which case the concentration of nonpolar FOG must be reported.

D. If a violation of any discharge limits or operating criteria is detected in monitoring, you shall notify KCIW immediately upon receipt of analytical data.

E. A self-monitoring report shall be filed with KCIW no later than the 15th day of the time period following the sample collection (i.e., the 15th day of the following month for monthly, weekly, daily samples; the 15th day of the following quarter for quarterly samples). If no discharge takes place during any monitoring period, it shall be noted on the report.

F. All self-monitoring data submitted to KCIW, which required a laboratory analysis, must have been performed by a laboratory accredited by the Washington State Department of Ecology for each parameter tested, using procedures approved by 40 CFR 136. This does not apply to field measurements performed by the industrial user such as pH, temperature, flow, atmospheric hydrogen sulfide, total dissolved sulfides, total settleable solids by Imhoff cone, or process control information.

G. All sampling data collected by the permittee and analyzed using procedures approved by 40 CFR 136 or approved alternatives shall be submitted to KCIW whether required as part of this authorization or done voluntarily by the permittee.

H. Self-monitoring reports shall be signed by an authorized representative of the industrial user. The authorized representative of the industrial user is defined as:

1. The president, secretary, treasurer, or a vice-president of the corporation in charge of a principal business function, or any other person who performs similar policy or decision-making functions for the corporation

2. The manager of one or more manufacturing, production, or operating facilities, but only if the manager:

   a. Is authorized to make management decisions that govern the operation of the regulated facility including having the explicit or implicit duty of making major capital investment recommendations, and initiate and direct other comprehensive measures to assure long-term environmental compliance with environmental laws and regulations
   b. Can ensure that the necessary systems are established or actions taken to gather complete and accurate information for control mechanism requirements and knowledgeable of King County reporting requirements
   c. Has been assigned or delegated the authority to sign documents, in accordance with corporate procedures

3. A general partner or proprietor if the industrial user is a partnership or proprietorship, respectively

4. A director or highest official appointed or designated to oversee the operation and performance of the industry if the industrial user is a government agency

5. The individuals described in one through four above may designate an authorized representative if:

   a. The authorization is submitted to King County in writing.
   b. The authorization specifies the individual or position responsible for the overall operation of the facility from which the discharge originates or having overall responsibility for environmental matters for the company or agency.

GENERAL DISCHARGE LIMITATIONS

Operating criteria

There shall be no odor of solvent, gasoline, or hydrogen sulfide (rotten egg odor), oil sheen, unusual color, or visible turbidity. The discharge must remain translucent. If any of the discharge limits are exceeded, you must stop discharging and notify KCIW at 206-477-5300.

Corrosive substances

Limits

Maximum:	pH 12.0 (s.u.)
Instantaneous minimum:	pH 5.0 (s.u.)
Daily minimum:	pH 5.5 (s.u.)

The instantaneous minimum pH limit is violated whenever any single grab sample or any instantaneous recording is less than pH 5.0. The daily minimum pH limit is violated whenever any continuous recording of 15 minutes or longer remains below pH 5.5 or when each pH value of four consecutive grab samples collected at 15-minute intervals or longer within a 24-hour period remains below pH 5.5.

Discharges of more than 50 gallons per day of caustic solutions equivalent to more than 5 percent NaOH by weight or greater than pH 12.0 are prohibited unless authorized by KCIW and subject to special conditions to protect worker safety, the collection system, and treatment works.

Fats, oils, and grease

Discharge of FOG shall not result in significant accumulations that either alone or in combination with other wastes are capable of obstructing flow or interfere with the operation or performance of sewer works or treatment facilities.

Dischargers of polar FOG (oil and grease from animal and/or vegetable origin) shall minimize free-floating polar FOG. Dischargers may not add emulsifying agents exclusively for the purpose of emulsifying free-floating FOG.

Nonpolar FOG limit: 100 mg/L

The limit for nonpolar FOG is violated when the arithmetic mean of the concentration of three grab samples, taken no more frequently than at five minute intervals, or when the results of a composite sample exceed the limitation.

Flammable or explosive materials

No person shall discharge any pollutant, as defined in 40 CFR 403.5, that creates a fire or explosion hazard in any sewer or treatment works, including, but not limited to, waste streams with a closed cup flashpoint of less than 140° Fahrenheit or 60° Centigrade using the test methods specified in 40 CFR 261.21.

At no time shall two successive readings on an explosion hazard meter, at the point of discharge into the system (or at any point in the system), be more than 5 percent nor any single reading be more than 10 percent of the lower explosive limit (LEL) of the meter.

Pollutants subject to this prohibition include, but are not limited to, gasoline, kerosene, naphtha, benzene, toluene, xylene, ethers, alcohols, ketones, aldehydes, peroxides, chlorates, perchlorates, bromates, carbides, hydrides, and sulfides, and any other substances that King County, the fire department, Washington State, or the U.S. Environmental Protection Agency has notified the user are a fire hazard or a hazard to the system.

Petroleum Compounds	**Maximum Concentration ppm (mg/L)**
Benzene	0.07
Ethylbenzene	1.7
Toluene	1.4
Total xylenes	2.2

Heavy metals/cyanide

The industrial user shall not discharge wastes, which exceed the following limitations:

Heavy Metals & Cyanide	**Instantaneous Maximum ppm (mg/L)[1]**	**Daily Average ppm (mg/L)[2]**
Arsenic	4.0	1.0
Cadmium	0.6	0.5
Chromium	5.0	2.75
Copper	8.0	3.0
Lead	4.0	2.0
Mercury	0.2	0.1
Nickel	5.0	2.5
Silver	3.0	1.0
Zinc	10.0	5.0
Cyanide	3.0	2.0

[1] The instantaneous maximum is violated whenever the concentration of any sample, including a grab within a series used to calculate daily average concentrations, exceeds the limitation.

[2] The daily average limit is violated: a) for a continuous flow system when a composite sample consisting of four or more consecutive samples collected during a 24-hour period over intervals of 15 minutes or greater exceeds the limitation, or b) for a batch system when any sample exceeds the limitation. A composite sample is defined as at least four grab samples of equal volume taken throughout the processing day from a well-mixed final effluent chamber, and analyzed as a single sample.

High temperature

The industrial user shall not discharge material with a temperature in excess of 65° C (150° F).

Hydrogen sulfide

Atmospheric hydrogen sulfide: 10.0 ppm
(As measured at a monitoring manhole designated by KCIW)

Soluble sulfide limits may be established on a case-by-case basis depending upon volume of discharge and conditions in the receiving sewer, including oxygen content and existing sulfide concentrations.

Organic compounds

No person shall discharge any organic pollutants that result in the presence of toxic gases, vapors, or fumes within a public or private sewer or treatment works in a quantity that may cause worker health and safety problems.

Organic pollutants subject to this restriction include, but are not limited to: Any organic pollutants compound listed in 40 CFR Section 433.11 (e) (total toxic organics [TTO] definition), acetone, 2-butanone (MEK), 4-methyl-2-pentanone (MIBK), and xylenes.

Settleable solids

Settleable solids concentrations: 7.0 ml/L

GENERAL CONDITIONS

A. All requirements of King County Code pertaining to the discharge of wastes into the municipal sewer system are hereby made a condition of this discharge authorization.

B. The industrial discharger shall implement measures to prevent accidental spills or discharges of prohibited substances to the municipal sewer system. Such measures include, but are not limited to, secondary containment of chemicals and wastes, elimination of connections to the municipal sewer system, and spill response equipment.

C. Any facility changes, which will result in a change in the character or volume of the pollutants discharged to the municipal sewer system, must be reported to your KCIW representative. Any facility changes that will cause the violation of the effluent limitations specified herein will not be allowed.

D. In the event the permittee is unable to comply with any of the conditions of this discharge authorization because of breakdown of equipment or facilities, an accident caused by human error, negligence, or any other cause, such as an act of nature the company shall:

1. Take immediate action to stop, contain, and clean up the unauthorized discharges and correct the problem.
2. Immediately notify KCIW and, if after 5 p.m. weekdays and on weekends, call the emergency King County treatment plant phone number on Page 1 so steps can be taken to prevent damage to the sewer system.
3. Submit a written report within 14 days of the event (*14-Day Report*) describing the breakdown, the actual quantity and quality of resulting waste discharged, corrective action taken, and the steps taken to prevent recurrence.

E. Compliance with these requirements does not relieve the permittee from responsibility to maintain continuous compliance with the conditions of this discharge authorization or the resulting liability for failure to comply.

F. The permittee shall, at all reasonable times, allow authorized representatives of KCIW to enter that portion of the premises where an effluent source or disposal system is located or in which any records are required to be kept under the terms and conditions of this authorization.

G. Nothing in this discharge authorization shall be construed as excusing the permittee from compliance with any applicable federal, state, or local statutes, ordinances, or regulations including discharge into waters of the state. Any such discharge is subject to regulation and enforcement action by the Washington State Department of Ecology.

H. This discharge authorization does not authorize discharge after its expiration date. If the permittee wishes to continue to discharge after the expiration date, an application must be filed for reissuance of this discharge authorization at least 90 days prior to the expiration date. If the permittee submits its reapplication in the time specified herein, the permittee shall be deemed to have an effective wastewater discharge authorization until KCIW issues or denies the new wastewater discharge authorization. If the permittee fails to file its reapplication in the time period specified herein, the permittee will be deemed to be discharging without authorization.

Compliance Investigator: _____ Date: June 2, 2017
Ryan Salem

King County
Wastewater Treatment Division
Industrial Waste Program
Department of Natural Resources and Parks
201 South Jackson Street, Suite 513
Seattle, WA 98104-3855
206-477-5300 Fax 206-263-3001
TTY Relay: 711

July 25, 2016

Scott Brewer
Kirkland Main Street, LP
600 108th Ave. NE, Suite 1010
Bellevue, WA 98004

General Letter of Authorization – Construction: # 40032-01 for Kirkland Main Street, LP - Park Lane Mixed-Use Apartments Construction Project to Discharge to the King County Sanitary Sewer

Dear Mr. Scott Brewer:

In accordance with King County Code 28.84.060, King County Industrial Waste Program (KCIW) authorizes the discharge of construction dewatering/process wastewater to the King County sanitary sewer from the Kirkland Main Street, LP - Park Lane Mixed-Use Apartments Construction Project. This project is required to meet all the limitations, monitoring requirements, and other conditions specified in this authorization.

This authorization is the only KCIW authorization that will be issued for the project identified in your application. This authorization is issued for the maximum duration of two years. It is valid from July 29, 2016 through July 28, 2018, or the duration of this project, whichever comes first. It is the permittee's responsibility to notify KCIW of project closure or any changes with this project.

This authorization alone does not allow you to discharge to the sanitary sewer. You must contact the local sewer agency to obtain approval along with a discharge location before discharging to the sanitary sewer. Wastewater from this project must be discharged to/at the location(s) specified by the local sewer agency. The local sewer agency will assess sewer charges, set flow rate restrictions and may impose additional requirements.

General Conditions

All discharges and activities approved by this authorization shall be consistent with King County Code 28.84.060 and the terms and conditions outlined in this authorization. A copy of this discharge approval, as well as required daily monitoring records, shall be on site and available for review and reference by KCIW or local sewer agency representatives.

This authorization to discharge is based on your agreement and signed application.

This authorization permits the discharge of up to 25,000 gallons per day (gpd) of construction dewatering from the construction site into the sanitary sewer. Discharging pollutants more frequently or in higher concentrations or quantity than authorized in this letter is a violation of the terms and conditions of this authorization. You must contact KCIW in advance and receive authorization before making changes beyond the terms and conditions of this authorization. Examples of changes include:

- Construction dewatering volume above 25,000 gpd.
- Site's surface area generates contaminated stormwater that exceeds one acre in aggregate.
- Site conditions indicate potential for chemical contamination.
- Substantial changes in the quality of the discharged water.
- Discharge of wastes or contaminants from sources other than those permitted herein.

This permit does not constitute authority for discharge into waters of the state. Any such discharge is subject to enforcement action by the Washington State Department of Ecology.

You must allow authorized representatives of KCIW to enter, inspect, and sample as specified in King County Code 28.84.060.L, "Inspection and Sampling of Industrial Users."

You must install an accessible sampling spigot on the discharge pipe from the last treatment unit of the wastewater treatment system. The sample site shall be representative of all industrial waste streams discharged to the sewer from this project. Each sample site shall be accessible to KCIW representatives when discharge to the sewer is occurring.

You must install a totalizing, non-resettable flow meter on all permitted discharge pipes to the sewer or as approved by your local sewer agency. The meters shall account for all industrial waste streams discharged to the sewer from this site.

Discharge Limitations

Parameter	Limitation
Instantaneous maximum discharge rate	To be determined by local sewer agency. Not to exceed 200 gallons per minute or the sedimentation tank flow restriction, whichever is more stringent.
Maximum daily discharge volume	25,000 gpd
Settleable solids	7.0 mL/L
Nonpolar fats, Oil & Grease (FOG)	100 mg/L
pH Minimum	5.5 s.u.
pH Maximum	12 s.u.
Soluble Sulfides (Screening Level)	0.1 mg/L

The water being discharged will not do the following:

- Violate any discharge standard, limitation, or specific prohibition of King County Code 28.84.060 or local discharge limits applicable on the date of discharge (see Section 28.84.060.D-F of the King County Code).
- Contain the odor of solvent, gasoline, or hydrogen sulfide (rotten egg odor), oil sheen, unusual color, or visible turbidity.
- Cause hydraulic overloading conditions of the sewerage conveyance system. During periods of peak hydraulic loading, KCIW or local sewer agency representatives reserve the authority to request that discharge to the sewer be stopped.

You must stop discharging and notify KCIW, by phone at 206-477-5300 or email at info.KCIW@kingcounty.gov, if you exceed any of the discharge limits, or notice odor of solvent, gasoline, or hydrogen sulfide (rotten egg odor), oil sheen, unusual color, or visible turbidity.

Monitoring Requirements

You shall conduct the following self-monitoring requirements for this authorization.

Parameter	Frequency	Sample Type/Method
Discharge volume	Daily	In-line flow meter
Discharge rate	Daily	In-line flow meter
Settleable solids	Daily	Grab by Imhoff cone[1]

[1] The settleable solids field test by Imhoff cone must be performed as follows:

- Fill cone to one-liter mark with well-mixed sample.
- Allow 45 minutes to settle.
- Gently stir sides of cone with a rod or by spinning. Settle 15 minutes longer.
- Record volume of settleable matter in the cone as mL/L.

All tests, measurements and analyses shall be performed in accordance with procedures established by the administrator of the U.S. Environmental Protection Agency (EPA) pursuant to section 304(g) of the federal Clean Water Act and contained in 40 CFR Part 136 and amendments thereto or with any other test procedure approved in writing by the EPA administrator, and/or KCIW.

Records Management

You will maintain records relating to all permitted discharges to the King County sewerage system including but not limited to routine maintenance, waste disposal dates, manifests, any analytical lab results, monitoring records, and flow records

All records required must be available for review by KCIW and must be kept through the completion of the project.

Special Conditions

You must implement erosion control best management practices to minimize the amount of solids discharged to the sanitary sewer system. As a minimum precaution, the construction dewatering must be pumped to an appropriately sized settling tank prior to entering the sewer system.

The authorization to discharge is based on your agreement and signed application to comply with the minimum standards outlined in *Minimum Standards for Rectangular Sedimentation Tank Design and Technical memorandum* found on county's webpage[1].

The following two sedimentation tank options may be used, depending on site conditions and project requirements:

1. Rectangular Sedimentation Tank (Flow-Through Discharge)

   The minimum required standards for the flow-through system are:

   - Minimum hydraulic retention time: ≥ 90 minutes
   - Minimum length-to-width ratio (length : width): ≥ 4:1
   - Maximum overflow rate (gallons-per-minute per square foot of surface area): ≤ 1.0 gpm/ft^2
   - Maximum sediment accumulation (level of sedimentation tank water column): ≤ 25%
   - Requirement to add additional sedimentation tanks in parallel for higher flow rates.[1]

   [1] Example: At 200 gpm flow, to meet the Minimum hydraulic retention time of ≥ 90 minutes, you need a minimum of 18,000 gallons rectangular tank (18,000 gal / 200 gal/min = 90 minute hydraulic retention time). Correspondingly, at 100-gpm flow, you need a 9,000-gallon tank, and at 65 gpm, the tank volume shall be 5850 gallons. If gravity discharge from the tank is not possible, the effective volume of the tank needs to be reduced to the level of the pump intake and under no circumstances can the pump intake be lower than one-half (1/2) of the tank height.

2. Circular Sedimentation Tank (Batch Discharge):

   At some smaller construction sites, process wastewater is produced intermittently. The minimum required standards for batch discharge area as follows:

   - Minimum 5,000 gallon circular tank, which can accommodate a maximum of five batch discharges per day.
   - At least one hour of quiescent (undisturbed) settling must occur in the tank prior to discharge. During this settling time, no additional process wastewater can be added to the sedimentation tank.
   - Maximum sediment accumulation (level of sedimentation tank water column): ≤ 25%

[1] http://www.kingcounty.gov/environment/wastewater/IndustrialWaste/GettingDischargeApproval/Construction/Sedimentation_tanks.aspx.

The permittee shall properly operate and maintain all wastewater treatment units to ensure compliance with established discharge limits. Solids accumulation in tanks used for solids settling shall not exceed 25 percent of the tank's working hydraulic capacity. Each tank's working hydraulic capacity is based on the water column height as measured from the bottom of the tank to either the invert elevation of the tank's outlet pipe (gravity discharges) or discharge pump intake (pumped discharges).

General Information

King County Code 28.84 authorizes a fee for each Letter of Authorization issued by the King County Department of Natural Resources and Parks. The current fee for issuance of a Letter of Authorization is $950. King County will send an invoice for this amount.

If you have any questions about this authorization or your construction dewatering discharge, please call us at 206-477-5300, or email us at info.KCIW@kingcounty.gov. You may also visit our program's Internet pages at www.kingcounty.gov/industrialwaste.

Thank you for helping support our mission to protect public health and enhance the environment.

Sincerely,

Despina Strong
Industrial Waste Program Manager

Enclosure

cc: Katy Coleman, City Of Kirkland

King County
Wastewater Treatment Division
Industrial Waste Program
Department of Natural Resources and Parks
201 South Jackson Street, Suite 513
Seattle, WA 98104-3855
206-477-5300 Fax 206-263-3001
TTY Relay: 711

April 15, 2016

Greg Neumann
City of Kirkland
123 5th Ave.
Kirkland, WA 98033

Letter of Authorization 40016-01 to Discharge to the Sanitary Sewer

Dear Mr. Neumann:

In accordance with King County Code 28.84.060, the King County Industrial Waste Program (KCIW) authorizes the discharge of construction dewatering/process wastewater to the King County sanitary sewer from the City of Kirkland - Cochran Springs/Lake Washington Boulevard Crossing Enhancement Construction Project. This project is required to meet all the limitations, monitoring requirements, and other conditions specified in this authorization.

This authorization is the only KCIW authorization that will be issued for the project identified in your application. This authorization is issued for the maximum duration of two years. It is valid from April 15, 2016 through April 14, 2018, or the duration of this project, whichever comes first. It is the permittee's responsibility to notify KCIW of project closure or any changes with this project.

This authorization alone does not allow you to discharge to the sanitary sewer. You must contact the local sewer agency to obtain approval along with a discharge location before discharging to the sanitary sewer. Wastewater from this project must be discharged to/at the location(s) specified by the local sewer agency. The local sewer agency will assess sewer charges, set flow rate restrictions and may impose additional requirements.

General Conditions

All discharges and activities approved by this authorization shall be consistent with King County Code 28.84.060 and the terms and conditions outlined in this authorization. A copy of this discharge approval, as well as required daily monitoring records, shall be on site and available for review and reference by KCIW or local sewer agency representatives.

This authorization permits the discharge of up to 25,000 gallons per day (gpd) of construction dewatering from the construction site into the sanitary sewer. Discharging pollutants more frequently or in higher concentrations or quantity than authorized in this letter is a violation of the terms and conditions of this authorization. You must contact KCIW in advance and receive authorization before making changes beyond the terms and conditions of this authorization. Examples of changes include:

- Construction dewatering volume above 25,000 gpd
- Site's surface area generates contaminated stormwater that exceeds one acre in aggregate
- Site conditions indicate potential for chemical contamination
- Substantial changes in the quality of the discharged water
- Discharge of wastes or contaminants from sources other than those permitted herein

This permit does not constitute authority for discharge into waters of the state. Any such discharge is subject to enforcement action by the Washington State Department of Ecology.

You must allow authorized representatives of KCIW to enter, inspect, and sample as specified in King County Code 28.84.060.L, "Inspection and Sampling of Industrial Users."

You must install an accessible sampling spigot on the discharge pipe from the last treatment unit of the wastewater treatment system. The sample site shall be representative of all industrial waste streams discharged to the sewer from this project. Each sample site shall be accessible to KCIW representatives when discharge to the sewer is occurring.

You must install a totalizing, non-resettable flow meter on all permitted discharge pipes to the sewer or as approved by your local sewer agency. The meters shall account for all industrial waste streams discharged to the sewer from this site.

Discharge Limitations

Parameter	**Limitation**
Instantaneous maximum discharge rate	To be determined by local sewer agency. Not to exceed 200 gallons per minute or the sedimentation tank flow restriction, whichever is more stringent.
Maximum daily discharge volume	25,000 gpd
Settleable solids	7.0 mL/L
Nonpolar fats, Oil & Grease (FOG)	100 mg/L
pH Minimum	5.5 s.u.
pH Maximum	12 s.u.
Soluble Sulfides (Screening Level)	0.1 mg/L

The water being discharged will not do the following:

- Violate any discharge standard, limitation, or specific prohibition of King County Code 28.84.060 or local discharge limits applicable on the date of discharge (see Section 28.84.060.D-F of the King County Code)
- Contain the odor of solvent, gasoline, or hydrogen sulfide (rotten egg odor), oil sheen, unusual color, or visible turbidity
- Cause hydraulic overloading conditions of the sewerage conveyance system. During periods of peak hydraulic loading, KCIW or local sewer agency representatives reserve the authority to request that discharge to the sewer be stopped.

You must stop discharging and notify KCIW, by phone at 206-477-5300 or email at info.KCIW@kingcounty.gov, if you exceed any of the discharge limits, or notice odor of solvent, gasoline, or hydrogen sulfide (rotten egg odor), oil sheen, unusual color, or visible turbidity.

Monitoring Requirements

You shall conduct the following self-monitoring requirements for this authorization.

Parameter	Frequency	Sample Type/Method
Discharge volume	Daily	In-line flow meter
Discharge rate	Daily	In-line flow meter
Settleable solids	Daily	Grab by Imhoff cone[1]

[1] The settleable solids field test by Imhoff cone must be performed as follows:

- Fill cone to one-liter mark with well-mixed sample.
- Allow 45 minutes to settle.
- Gently stir sides of cone with a rod or by spinning. Settle 15 minutes longer.
- Record volume of settleable matter in the cone as mL/L.

All tests, measurements and analyses shall be performed in accordance with procedures established by the administrator of the U.S. Environmental Protection Agency (EPA) pursuant to section 304(g) of the federal Clean Water Act and contained in 40 CFR Part 136 and amendments thereto or with any other test procedure approved in writing by the EPA administrator, and/or KCIW.

Records Management

You will maintain records relating to all permitted discharges to the King County sewerage system including but not limited to routine maintenance, waste disposal dates, manifests, any analytical lab results, monitoring records, and flow records

All records required must be available for review by KCIW and must be kept through the completion of the project.

Special Conditions

You must implement erosion control best management practices to minimize the amount of solids discharged to the sanitary sewer system. As a minimum precaution, the construction dewatering must be pumped to an appropriately sized settling tank prior to entering the sewer system.

The authorization to discharge is based on your agreement and signed application to comply with the minimum standards outlined in *Minimum Standards for Rectangular Sedimentation Tank Design and Technical memorandum* found on county's webpage[1].

The following two sedimentation tank options may be used, depending on site conditions and project requirements:

1. Rectangular Sedimentation Tank (Flow-Through Discharge)

   The minimum required standards for the flow-through system are:

   - Minimum hydraulic retention time: ≥ 90 minutes
   - Minimum length-to-width ratio (length : width): ≥ 4:1
   - Maximum overflow rate (gallons-per-minute per square foot of surface area): ≤ 1.0 gpm/ft^2
   - Maximum sediment accumulation (level of sedimentation tank water column): ≤ 25%
   - Requirement to add additional sedimentation tanks in parallel for higher flow rates.[1]

   [1] Example: At 200 gpm flow, to meet the Minimum hydraulic retention time of ≥ 90 minutes, you need a minimum of 18,000 gallons rectangular tank (18,000 gal / 200 gal/min = 90 minute hydraulic retention time). Correspondingly, at 100-gpm flow, you need a 9,000-gallon tank, and at 65 gpm, the tank volume shall be 5850 gallons. If gravity discharge from the tank is not possible, the effective volume of the tank needs to be reduced to the level of the pump intake and under no circumstances can the pump intake be lower than one-half (1/2) of the tank height.

2. Circular Sedimentation Tank (Batch Discharge):

   At some smaller construction sites, process wastewater is produced intermittently. The minimum required standards for batch discharge area as follows:

   - Minimum 5,000 gallon circular tank, which can accommodate a maximum of five batch discharges per day.

[1] http://www.kingcounty.gov/environment/wastewater/IndustrialWaste/GettingDischargeApproval/Construction/Sedimentation_tanks.aspx.

- At least one hour of quiescent (undisturbed) settling must occur in the tank prior to discharge. During this settling time, no additional process wastewater can be added to the sedimentation tank.
- Maximum sediment accumulation (level of sedimentation tank water column): ≤ 25%

The permittee shall properly operate and maintain all wastewater treatment units to ensure compliance with established discharge limits. Solids accumulation in tanks used for solids settling shall not exceed 25 percent of the tank's working hydraulic capacity. Each tank's working hydraulic capacity is based on the water column height as measured from the bottom of the tank to either the invert elevation of the tank's outlet pipe (gravity discharges) or discharge pump intake (pumped discharges).

General Information

King County Code 28.84 authorizes a fee for each Letter of Authorization issued by the King County Department of Natural Resources and Parks. The current fee for issuance of a Letter of Authorization is $750. King County will send an invoice for this amount.

If you have any questions about this authorization or your construction dewatering discharge, please call us at 206-477-5300, or email us at info.KCIW@kingcounty.gov. You may also visit our program's Internet pages at www.kingcounty.gov/industrialwaste.

Thank you for helping support our mission to protect public health and enhance the environment.

Sincerely,

Despina Strong
Industrial Waste Program Manager

cc: Katy Coleman

King County
Wastewater Treatment Division
Industrial Waste Program
Department of Natural Resources and Parks
201 South Jackson Street, Suite 513
Seattle, WA 98104-3855
206-477-5300 Fax 206-263-3001
TTY Relay: 711

August 9, 2017

CERTIFIED MAIL
RETURN RECEIPT REQUESTED

Joshua Pantzke
City of Kirkland
123 Fifth Avenue
Kirkland, WA 98033

Issuance of Wastewater Discharge Authorization No. 4131-03 to City of Kirkland - Storm/Sewer Decant Station

Dear Mr. Pantzke:

The King County Industrial Waste Program (KCIW) has reviewed your application to discharge industrial wastewater to the sewer system from the City of Kirkland - Storm/Sewer Decant Station facility located at 1030 Eighth Street, Kirkland, Washington, and has issued the enclosed Major Discharge Authorization. The enclosed Discharge Authorization No. 4131-03 supersedes and cancels Discharge Authorization No. 4131-02, effective August 28, 2017.

This authorization permits you to discharge limited amounts of industrial wastewater into King County's sewer system in accordance with the effluent limitations and other requirements and conditions set forth in the document and the regulations outlined in King County Code 28.84.060 (enclosed). As long as you maintain compliance with regulations and do not change the nature and volume of your discharge, KCIW will not require you to apply for an industrial wastewater discharge permit, a type of approval that would result in additional requirements and increased fees.

The main changes to this permit are:

1. Added a second sampling site (A20582) for the Vault 3 discharge
2. Added a special condition to evaluate flow metering devices and implement the installation or use of flow metering devices

If you propose to increase the volume of your discharge or change the type or quantities of substances discharged, you must contact KCIW at least 60 days before making these changes.

King County Code 28.84 authorizes a fee for each Major Discharge Authorization issued by the King County Department of Natural Resources and Parks. The current fee for issuance of a Major Discharge Authorization is $2750. King County will send you an invoice for this amount.

If you have any questions about this discharge authorization or your wastewater discharge, please call me at 206-477-5426 or email me at todd.gowing@kingcounty.gov. You may also wish to visit our program's Internet pages at: www.kingcounty.gov/industrialwaste.

Thank you for helping support our mission to protect public health and enhance the environment.

Sincerely,

Stacy for Todd Gowing

Todd Gowing
Compliance Investigator

Enclosures

King County

MAJOR DISCHARGE AUTHORIZATION
King County Industrial Waste Program
201 S. Jackson Street, Suite 513
Seattle, WA 98104-3855

NUMBER 4131-03

for

City of Kirkland - Storm/Sewer Decant Station

Facility address: 908 8th Street
Kirkland, WA 98033

Mailing address: 123 Fifth Avenue
Kirkland, WA 98033-6189

Phone: 425-587-3917

Emergency (24-hour) phone: 425-559-3131

Industry type: Decant Station

SIC code: 9199 **EPA Id. No.:** NA
Discharge to: South Treatment Plant

*Note: This authorization is valid only for the specific discharges shown below:

Discharge process: Wastewater generated by decant station operation

Effective date: August 28, 2017
Expiration date: August 27, 2022

DESCRIPTION OF SAMPLE SITES AND DISCHARGE VOLUMES

Sample Site No.	Description	Maximum Volume (gallons per day)	
		Industrial	Total
A2058	Catch basin @ final MH	13,000	13,000
A20582	Vault 3 OWS	1,500	1,500

Permission is hereby granted to discharge industrial wastewater from the above-identified facility into the King County sewer system in accordance with the effluent limitations and monitoring requirements set forth in this authorization.

If the industrial user wishes to continue to discharge after the expiration date, an application must be filed for re-issuance of this discharge authorization at least 90 days prior to the expiration date. For information concerning this King County Discharge Authorization, please call Industrial Waste Compliance Investigator Todd Gowing at 206-477-5426.

24-HOUR EMERGENCY NOTIFICATION
South Treatment Plant: 206-263-1760
Washington State Department of Ecology: 425-649-7000

SPECIAL CONDITIONS

A. This authorization permits the discharge of limited volume of treated solids decant wastewater from vactor trucks used in the cleaning and maintenance of catch basins, storm drain lines, sewer lines, and pothole activities. Wastes or contaminants from sources other than permitted herein shall not be discharged to the sanitary sewer without prior King County approval.

B. For self-monitoring sampling requirements, the City of Kirkland shall only collect compliance samples when wastewater is physically discharging from the last chamber of the final detention vault and oil/water separator to the sanitary sewer.

C. The City of Kirkland shall properly operate and maintain the decant facility to ensure that the discharge complies with the King County discharge limits specified in this discharge authorization.

D. All oils and solids collected from the final detention vault and oil/water separator unit shall be removed for disposal at an approved site and shall not be allowed to enter the sanitary sewer system.

E. The City of Kirkland shall record the estimated decant volume associated with each vactor truck batch discharge into the final detention vault and oil/water separator. Daily discharge volume and settleable solids records shall be maintained on site and available for King County review for three years following collection.

F. By no later than **October 31, 2017**, the City of Kirkland must submit, for King County review and approval, a report that evealuates the installation, repair, or update to effluent flow meters for both sample sites A2058 and A20582. The report shall include a timeline for the change away from estimates of discharge volume to the use of effluent flow meters. The proposed timeling must not exceed 90 days after King County approval.

SELF-MONITORING REQUIREMENTS

A. The following self-monitoring requirements shall be met for this discharge authorization:

Sample Site No.	Parameter	Sample Type	Frequency
A2058 & A20582	Copper, Total	Grab	Quarterly
	Lead, Total	Grab	Quarterly
	Zinc, Total	Grab	Quarterly
	Settleable Solids	Grab	Monthly
	pH	Grab	Quarterly
	Non-Polar Fats, Oils and Grease (FOG)	3 Grabs	Quarterly
	Discharge Volume	Truck volume estimates / Meter[1]	Daily
	Total Monthly Flow	Truck volume estimates / Meter	Report Quarterly
	Maximum Daily Discharge Volume	Truck volume estimates / Meter	Report Quarterly
	Hydrogen sulfide	Meter reading	Only if operating criteria for rotten egg odor are exceeded
	Explosivity	Meter reading	Only if operating criteria for visible sheen or odor of solvent/gasoline are exceeded

B. The settleable solids field test by Imhoff cone must be performed as follows:

1. Fill Imhoff cone to one-liter mark with well-mixed sample
2. Allow 45 minutes to settle
3. Gently stir sides of cone with a rod or by spinning; settle 15 minutes longer
4. Record volume of settleable matter in the cone as mL/L

C. The three nonpolar fats, oils, and grease (FOG) grab samples shall be of equal volume, collected at least five minutes apart, and analyzed separately. When using U.S. Environmental Protection Agency approved protocols specified in 40 CFR Part 136, the individual grab samples may be composited (at the laboratory) prior to analysis. The result of the composite sample or the average of the concentrations of the three grab samples may be reported as Total FOG unless the value is 100 mg/L or greater, in which case the concentration of nonpolar FOG must be reported.

D. If a violation of any discharge limits or operating criteria is detected in monitoring, you shall notify KCIW immediately upon receipt of analytical data.

E. A self-monitoring report shall be filed with KCIW no later than the 15th day of the time period following the sample collection (i.e., the 15th day of the following month for monthly,

[1] See Special Condition F

weekly, daily samples; the 15th day of the following quarter for quarterly samples). If no discharge takes place during any monitoring period, it shall be noted on the report.

F. All self-monitoring data submitted to KCIW, which required a laboratory analysis, must have been performed by a laboratory accredited by the Washington State Department of Ecology for each parameter tested, using procedures approved by 40 CFR 136. This does not apply to field measurements performed by the industrial user such as pH, temperature, flow, atmospheric hydrogen sulfide, total dissolved sulfides, total settleable solids by Imhoff cone, or process control information.

G. All sampling data collected by the permittee and analyzed using procedures approved by 40 CFR 136 or approved alternatives shall be submitted to KCIW whether required as part of this authorization or done voluntarily by the permittee.

H. Self-monitoring reports shall be signed by an authorized representative of the industrial user. The authorized representative of the industrial user is defined as:

1. The president, secretary, treasurer, or a vice-president of the corporation in charge of a principal business function, or any other person who performs similar policy or decision-making functions for the corporation

2. The manager of one or more manufacturing, production, or operating facilities, but only if the manager:

   a. Is authorized to make management decisions that govern the operation of the regulated facility including having the explicit or implicit duty of making major capital investment recommendations, and initiate and direct other comprehensive measures to assure long-term environmental compliance with environmental laws and regulations
   b. Can ensure that the necessary systems are established or actions taken to gather complete and accurate information for control mechanism requirements and knowledgeable of King County reporting requirements
   c. Has been assigned or delegated the authority to sign documents, in accordance with corporate procedures

3. A general partner or proprietor if the industrial user is a partnership or proprietorship, respectively

4. A director or highest official appointed or designated to oversee the operation and performance of the industry if the industrial user is a government agency

5. The individuals described in one through four above may designate an authorized representative if:

   a. The authorization is submitted to King County in writing.
   b. The authorization specifies the individual or position responsible for the overall operation of the facility from which the discharge originates or having overall responsibility for environmental matters for the company or agency.

GENERAL DISCHARGE LIMITATIONS

Operating criteria

There shall be no odor of solvent, gasoline, or hydrogen sulfide (rotten egg odor), oil sheen, unusual color, or visible turbidity. You must collect additional monitoring samples in accordance with Part A of the Self-Monitoring Requirements if you observe any of the preceding conditions. If any of the discharge limits are exceeded, you must stop discharging and notify KCIW at 206-477-5300. Any additional monitoring samples collected in accordance with Part A of the Self-Monitoring Requirements must be submitted to King County on your self-monitoring report. Failure to collect additional samples in accordance with Part A will result in a violation of your permit conditions and result in potential enforcement action.

Corrosive substances

Limits

Maximum:	pH 12.0 (s.u.)
Instantaneous minimum:	pH 5.0 (s.u.)
Daily minimum:	pH 5.5 (s.u.)

The instantaneous minimum pH limit is violated whenever any single grab sample or any instantaneous recording is less than pH 5.0. The daily minimum pH limit is violated whenever any continuous recording of 15 minutes or longer remains below pH 5.5 or when each pH value of four consecutive grab samples collected at 15-minute intervals or longer within a 24-hour period remains below pH 5.5.

Discharges of more than 50 gallons per day of caustic solutions equivalent to more than 5 percent NaOH by weight or greater than pH 12.0 are prohibited unless authorized by KCIW and subject to special conditions to protect worker safety, the collection system, and treatment works.

Fats, oils, and grease

Discharge of FOG shall not result in significant accumulations that either alone or in combination with other wastes are capable of obstructing flow or interfere with the operation or performance of sewer works or treatment facilities.

Dischargers of polar FOG (oil and grease from animal and/or vegetable origin) shall minimize free-floating polar FOG. Dischargers may not add emulsifying agents exclusively for the purpose of emulsifying free-floating FOG.

Nonpolar FOG limit: 100 mg/L

The limit for nonpolar FOG is violated when the arithmetic mean of the concentration of three grab samples, taken no more frequently than at five minute intervals, or when the results of a composite sample exceed the limitation.

Flammable or explosive materials

No person shall discharge any pollutant, as defined in 40 CFR 403.5, that creates a fire or explosion hazard in any sewer or treatment works, including, but not limited to, waste streams with a closed cup flashpoint of less than 140° Fahrenheit or 60° Centigrade using the test methods specified in 40 CFR 261.21.

At no time shall two successive readings on an explosion hazard meter, at the point of discharge into the system (or at any point in the system), be more than 5 percent nor any single reading be more than 10 percent of the lower explosive limit (LEL) of the meter.

Pollutants subject to this prohibition include, but are not limited to, gasoline, kerosene, naphtha, benzene, toluene, xylene, ethers, alcohols, ketones, aldehydes, peroxides, chlorates, perchlorates, bromates, carbides, hydrides, and sulfides, and any other substances that King County, the fire department, Washington State, or the U.S. Environmental Protection Agency has notified the user are a fire hazard or a hazard to the system.

Petroleum Compounds	Maximum Concentration ppm (mg/L)
Benzene	0.07
Ethylbenzene	1.7
Toluene	1.4
Total xylenes	2.2

Heavy metals/cyanide

The industrial user shall not discharge wastes, which exceed the following limitations:

Heavy Metals & Cyanide	Instantaneous Maximum ppm (mg/L)[1]	Daily Average ppm (mg/L)[2]
Arsenic	4.0	1.0
Cadmium	0.6	0.5
Chromium	5.0	2.75
Copper	8.0	3.0
Lead	4.0	2.0
Mercury	0.2	0.1
Nickel	5.0	2.5
Silver	3.0	1.0
Zinc	10.0	5.0
Cyanide	3.0	2.0

[1] The instantaneous maximum is violated whenever the concentration of any sample, including a grab within a series used to calculate daily average concentrations, exceeds the limitation.

[2] The daily average limit is violated: a) for a continuous flow system when a composite sample consisting of four or more consecutive samples collected during a 24-hour period over intervals of 15 minutes or greater exceeds the limitation, or b) for a batch system when any sample exceeds the limitation. A composite sample is defined as at least four grab samples of equal volume taken throughout the processing day from a well-mixed final effluent chamber, and analyzed as a single sample.

High temperature

The industrial user shall not discharge material with a temperature in excess of 65° C (150° F).

Hydrogen sulfide

Atmospheric hydrogen sulfide: 10.0 ppm
(As measured at a monitoring manhole designated by KCIW)

Soluble sulfide limits may be established on a case-by-case basis depending upon volume of discharge and conditions in the receiving sewer, including oxygen content and existing sulfide concentrations.

Organic compounds

No person shall discharge any organic pollutants that result in the presence of toxic gases, vapors, or fumes within a public or private sewer or treatment works in a quantity that may cause worker health and safety problems.

Organic pollutants subject to this restriction include, but are not limited to: Any organic pollutants compound listed in 40 CFR Section 433.11 (e) (total toxic organics [TTO] definition), acetone, 2-butanone (MEK), 4-methyl-2-pentanone (MIBK), and xylenes.

Settleable solids

Settleable solids concentrations: 7.0 ml/L

GENERAL CONDITIONS

A. All requirements of King County Code pertaining to the discharge of wastes into the municipal sewer system are hereby made a condition of this discharge authorization.

B. The industrial discharger shall implement measures to prevent accidental spills or discharges of prohibited substances to the municipal sewer system. Such measures include, but are not limited to, secondary containment of chemicals and wastes, elimination of connections to the municipal sewer system, and spill response equipment.

C. Any facility changes, which will result in a change in the character or volume of the pollutants discharged to the municipal sewer system, must be reported to your KCIW representative. Any facility changes that will cause the violation of the effluent limitations specified herein will not be allowed.

D. In the event the permittee is unable to comply with any of the conditions of this discharge authorization because of breakdown of equipment or facilities, an accident caused by human error, negligence, or any other cause, such as an act of nature the company shall:

1. Take immediate action to stop, contain, and clean up the unauthorized discharges and correct the problem.
2. Immediately notify KCIW and, if after 5 p.m. weekdays and on weekends, call the emergency King County treatment plant phone number on Page 1 so steps can be taken to prevent damage to the sewer system.
3. Submit a written report within 14 days of the event (*14-Day Report*) describing the breakdown, the actual quantity and quality of resulting waste discharged, corrective action taken, and the steps taken to prevent recurrence.

E. Compliance with these requirements does not relieve the permittee from responsibility to maintain continuous compliance with the conditions of this discharge authorization or the resulting liability for failure to comply.

F. The permittee shall, at all reasonable times, allow authorized representatives of KCIW to enter that portion of the premises where an effluent source or disposal system is located or in which any records are required to be kept under the terms and conditions of this authorization.

G. Nothing in this discharge authorization shall be construed as excusing the permittee from compliance with any applicable federal, state, or local statutes, ordinances, or regulations including discharge into waters of the state. Any such discharge is subject to regulation and enforcement action by the Washington State Department of Ecology.

H. This discharge authorization does not authorize discharge after its expiration date. If the permittee wishes to continue to discharge after the expiration date, an application must be filed for reissuance of this discharge authorization at least 90 days prior to the expiration date. If the permittee submits its reapplication in the time specified herein, the permittee shall be deemed to have an effective wastewater discharge authorization until KCIW issues or denies the new wastewater discharge authorization. If the permittee fails to file its reapplication in the time period specified herein, the permittee will be deemed to be discharging without authorization.

Compliance Investigator: _____ Date: August 9, 2017
Todd Gowing

King County
Wastewater Treatment Division
Industrial Waste Program
Department of Natural Resources and Parks
201 South Jackson Street, Suite 513
Seattle, WA 98104-3855
206-477-5300 Fax 206-263-3001
TTY Relay: 711

October 21, 2016

David Pruin
PPN Ventures LP
950 North 72nd St., Suite 100
Seattle, WA 98103

General Letter of Authorization – Construction: # 40056-01 for PPN Ventures LP – Cubes Self Storage to Discharge to the King County Sanitary Sewer

Dear Mr. David Pruin: 615 7TH Ave

In accordance with King County Code 28.84.060, King County Industrial Waste Program (KCIW) authorizes the discharge of construction dewatering/process wastewater to the King County sanitary sewer from the Cubes Self Storage - Kirkland. This project is required to meet all the limitations, monitoring requirements, and other conditions specified in this authorization.

This authorization is the only KCIW authorization that will be issued for the project identified in your application. This authorization is issued for the maximum duration of two years. It is valid from October 25, 2015, through October 24, 2016, or the duration of this project, whichever comes first. It is the permittee's responsibility to notify KCIW of project closure or any changes with this project.

This authorization alone does not allow you to discharge to the sanitary sewer. You must contact the local sewer agency to obtain approval along with a discharge location before discharging to the sanitary sewer. Wastewater from this project must be discharged to/at the location(s) specified by the local sewer agency. The local sewer agency will assess sewer charges, set flow rate restrictions and may impose additional requirements.

General Conditions

All discharges and activities approved by this authorization shall be consistent with King County Code 28.84.060 and the terms and conditions outlined in this authorization. A copy of this discharge approval, as well as required daily monitoring records, shall be on site and available for review and reference by KCIW or local sewer agency representatives.
This authorization to discharge is based on your agreement and signed application.

This authorization permits the discharge of up to 25,000 gallons per day (gpd) of construction dewatering from the construction site into the sanitary sewer. Discharging pollutants more frequently or in higher concentrations or quantity than authorized in this letter is a violation of the terms and conditions of this authorization. You must contact KCIW in advance and receive authorization before making changes beyond the terms and conditions of this authorization. Examples of changes include:

- Construction dewatering volume above 25,000 gpd.
- Site's surface area generates contaminated stormwater that exceeds one acre in aggregate.
- Site conditions indicate potential for chemical contamination.
- Substantial changes in the quality of the discharged water.
- Discharge of wastes or contaminants from sources other than those permitted herein.

This permit does not constitute authority for discharge into waters of the state. Any such discharge is subject to enforcement action by the Washington State Department of Ecology.

You must allow authorized representatives of KCIW to enter, inspect, and sample as specified in King County Code 28.84.060.L, "Inspection and Sampling of Industrial Users."

You must install an accessible sampling spigot on the discharge pipe from the last treatment unit of the wastewater treatment system. The sample site shall be representative of all industrial waste streams discharged to the sewer from this project. Each sample site shall be accessible to KCIW representatives when discharge to the sewer is occurring.

You must install a totalizing, non-resettable flow meter on all permitted discharge pipes to the sewer or as approved by your local sewer agency. The meters shall account for all industrial waste streams discharged to the sewer from this site.

Discharge Limitations

Parameter	Limitation
Instantaneous maximum discharge rate	To be determined by local sewer agency. Not to exceed 200 gallons per minute or the sedimentation tank flow restriction, whichever is more stringent.
Maximum daily discharge volume	25,000 gpd
Settleable solids	7.0 mL/L
Nonpolar fats, Oil & Grease (FOG)	100 mg/L
pH Minimum	5.5 s.u.
pH Maximum	12 s.u.
Soluble Sulfides (Screening Level)	0.1 mg/L

The water being discharged will not do the following:

- Violate any discharge standard, limitation, or specific prohibition of King County Code 28.84.060 or local discharge limits applicable on the date of discharge (see Section 28.84.060.D-F of the King County Code).
- Contain the odor of solvent, gasoline, or hydrogen sulfide (rotten egg odor), oil sheen, unusual color, or visible turbidity.
- Cause hydraulic overloading conditions of the sewerage conveyance system. During periods of peak hydraulic loading, KCIW or local sewer agency representatives reserve the authority to request that discharge to the sewer be stopped.

You must stop discharging and notify KCIW, by phone at 206-477-5300 or email at info.KCIW@kingcounty.gov, if you exceed any of the discharge limits, or notice odor of solvent, gasoline, or hydrogen sulfide (rotten egg odor), oil sheen, unusual color, or visible turbidity.

Monitoring Requirements

You shall conduct the following self-monitoring requirements for this authorization.

Parameter	Frequency	Sample Type/Method
Discharge volume	Daily	In-line flow meter
Discharge rate	Daily	In-line flow meter
Settleable solids	Daily	Grab by Imhoff cone[1]

All tests, measurements and analyses shall be performed in accordance with procedures established by the administrator of the U.S. Environmental Protection Agency (EPA) pursuant to section 304(g) of the federal Clean Water Act and contained in 40 CFR Part 136 and amendments thereto or with any other test procedure approved in writing by the EPA administrator, and/or KCIW.

Records Management

You will maintain records relating to all permitted discharges to the King County sewerage system including but not limited to routine maintenance, waste disposal dates, manifests, any analytical lab results, monitoring records, and flow records.

All records required must be available for review by KCIW and must be kept through the completion of the project.

---

[1] The settleable solids field test by Imhoff cone must be performed as follows:
- Fill cone to one-liter mark with well-mixed sample.
- Allow 45 minutes to settle.
- Gently stir sides of cone with a rod or by spinning. Settle 15 minutes longer.
- Record volume of settleable matter in the cone as mL/L.

Special Conditions

You must implement erosion control best management practices to minimize the amount of solids discharged to the sanitary sewer system. As a minimum precaution, the construction dewatering must be pumped to an appropriately sized settling tank prior to entering the sewer system.

The authorization to discharge is based on your agreement and signed application to comply with the minimum standards outlined in *Minimum Standards for Rectangular Sedimentation Tank Design and Technical memorandum* found on county's webpage[2].

The following two sedimentation tank options may be used, depending on site conditions and project requirements:

1. Rectangular Sedimentation Tank (Flow-Through Discharge)

   The minimum required standards for the flow-through system are:

   - Minimum hydraulic retention time: $\geq$ 90 minutes
   - Minimum length-to-width ratio (length : width): $\geq$ 4:1
   - Maximum overflow rate (gallons-per-minute per square foot of surface area): $\leq$ 1.0 gpm/ft^2
   - Maximum sediment accumulation (level of sedimentation tank water column): $\leq$ 25%
   - Requirement to add additional sedimentation tanks in parallel for higher flow rates[3].

2. Circular Sedimentation Tank (Batch Discharge):

   At some smaller construction sites, process wastewater is produced intermittently. The minimum required standards for batch discharge area as follows:

   - Minimum 5,000 gallon circular tank, which can accommodate a maximum of five batch discharges per day.
   - At least one hour of quiescent (undisturbed) settling must occur in the tank prior to discharge. During this settling time, no additional process wastewater can be added to the sedimentation tank.
   - Maximum sediment accumulation (level of sedimentation tank water column): $\leq$ 25%

---

[2] http://www.kingcounty.gov/environment/wastewater/IndustrialWaste/GettingDischargeApproval/Construction/Sedimentation_tanks.aspx.

[3] Example: At 200 gpm flow, to meet the Minimum hydraulic retention time of $\geq$ 90 minutes, you need a minimum of 18,000 gallons rectangular tank (18,000 gal / 200 gal/min = 90 minute hydraulic retention time). Correspondingly, at 100-gpm flow, you need a 9,000-gallon tank, and at 65 gpm, the tank volume shall be 5850 gallons. If gravity discharge from the tank is not possible, the effective volume of the tank needs to be reduced to the level of the pump intake and under no circumstances can the pump intake be lower than one-half (1/2) of the tank height.

The permittee shall properly operate and maintain all wastewater treatment units to ensure compliance with established discharge limits. Solids accumulation in tanks used for solids settling shall not exceed 25 percent of the tank's working hydraulic capacity. Each tank's working hydraulic capacity is based on the water column height as measured from the bottom of the tank to either the invert elevation of the tank's outlet pipe (gravity discharges) or discharge pump intake (pumped discharges).

General Information

King County Code 28.84 authorizes a fee for each Letter of Authorization issued by the King County Department of Natural Resources and Parks. The current fee for issuance of a Letter of Authorization is $800. King County will send an invoice for this amount.

If you have any questions about this authorization or your construction dewatering discharge, please call us at 206-477-5300, or email us at info.KCIW@kingcounty.gov. You may also visit our program's Internet pages at www.kingcounty.gov/industrialwaste.

Thank you for helping support our mission to protect public health and enhance the environment.

Sincerely,

Despina Strong
Industrial Waste Program Manager

Enclosure

cc: Katy Coleman, City Of Kirkland

King County
Wastewater Treatment Division
Industrial Waste Program
Department of Natural Resources and Parks
201 South Jackson Street, Suite 513
Seattle, WA 98104-3855
206-477-5300 Fax 206-263-3001
TTY Relay: 711

November 7, 2016

Erin Hopkins
Toll Brothers Inc.
9720 NE 120th Place, Suite 100
Kirkland, WA 98034

Letter of Authorization 11732-01 to Discharge to the Sanitary Sewer

Dear Ms. Hopkins:

The King County Industrial Waste Program (KCIW) has reviewed your request to discharge construction dewatering to the sanitary sewer from the Toll Brothers Inc. - Kirkland Compound construction project located at 11808 NE 70th Street, Kirkland, Washington. In accordance with King County Code 28.84.060 (available at: www.kingcounty.gov/council/legislation/kc_code.aspx), KCIW grants approval for the discharge of up to 25,000 gallons per day for relief only from November 15, 2016, through November 14, 2018, provided that:

- If you have not already done so, you must obtain the required approval from City of Kirkland before discharging to allow for permitting of a connection to the sanitary sewer and assessment of sewer charges. Please call Greg Neumann, 425-587-3910, to obtain required approval.
- You meet the discharge limitations, special conditions, monitoring and reporting requirements listed below.

Discharge Limitations

Discharge rate	50 gallons per minute (gpm)
Maximum daily discharge volume	25,000 gallons per day (gpd) for relief only
Settleable solids (by Imhoff cone)	7.0 mL/L
Benzene	0.07 mg/L
Toluene	1.4 mg/L
Ethylbenzene	1.7 mg/L
Total xylenes	2.2 mg/L
Nonpolar fats, oils, and grease (FOG)	100 mg/L
pH minimum	5.5 s.u.
pH maximum	12.0 s.u.

There shall be no odor of solvent, gasoline, or hydrogen sulfide (rotten egg odor), oil sheen, unusual color, or visible turbidity. The discharge must remain translucent. If you exceed any of the discharge limits, you must stop discharging and notify KCIW by calling 206-477-5300.

Special Conditions

1. The discharge shall not cause hydraulic overloading conditions of the sewerage conveyance system. During periods of peak hydraulic loading, KCIW and City of Kirkland representatives reserve the authority to request that discharge to the sewer be stopped.

2. Discharge of stormwater to the sanitary sewer is authorized for relief only. Relief may be exercised during emergencies to prevent loss of life and property, and when discharging would result in a violation of the stormwater construction general permit. Relief may not be exercised to compensate for an inadequate stormwater treatment system, improper operation and maintenance of the stormwater treatment system, or delays in obtaining a stormwater construction general permit caused by the permittee.

3. Should the permittee exercises their relief option, they shall provide a report, within 14 days of initial discharge, discussing the cause of the discharge to King County sewer, the proposed date the discharge will cease, and corrective actions to ensure the facility stays in compliance with their stormwater construction general permit.

4. This document permits the discharge of limited amounts of construction dewatering from the construction site for relief only into the sanitary sewer. Wastes or contaminants from sources other than permitted herein shall not be discharged to the sanitary sewer without prior approval from KCIW.

5. Solids accumulation in tanks used for solids settling shall not exceed 25 percent of the tank's working hydraulic capacity. Each tank's working hydraulic capacity is based on the water column height as measured from the bottom of the tank to either the invert elevation of the tank's outlet pipe (gravity discharges) or discharge pump intake (pumped discharges).

6. A totalizing, non-resettable flow meter shall be installed on the discharge pipe from the wastewater treatment system to the approved point of discharge.

7. Discharge point is manhole # SSMH 3241 or as otherwise designated by City of Kirkland representatives.

8. Wastewater monitoring logs containing the results of the required field monitoring specified below must be maintained on site and must be available for review at reasonable times by authorized representatives of KCIW.

9. A copy of this discharge approval shall be on site at all times for review and reference.

10. This discharge approval is being issued with the understanding that no known soil or groundwater contamination is present on site. The permit holder is responsible for contacting KCIW should site conditions indicate potential for contamination.

Monitoring Requirements

You shall conduct the following self-monitoring requirements for this authorization:

Parameter	Frequency	Sample Type/Method
Discharge volume	Daily	In-line flow meter
Discharge rate	Daily	In-line flow meter
Settleable solids	Daily	Grab by Imhoff cone[1]
Turbidity	Daily	Hand-held meter

[1]The settleable solids field test by Imhoff cone must be performed as follows:

- Fill cone to one-liter mark with well-mixed sample.
- Allow 45 minutes to settle.
- Gently stir sides of cone with a rod or by spinning. Settle 15 minutes longer.
- Record volume of settleable matter in the cone as mL/L.

Records Management

You will maintain records relating to all permitted discharges to the King County sewerage system including but not limited to routine maintenance, waste disposal dates, manifests, any analytical lab results, monitoring records, and flow records

All records required must be available for review by KCIW and must be kept through the completion of the project

If you propose to increase the volume of your discharge or change the type or quantities of substances discharged, you must contact KCIW at least 60 days before making these changes.

King County Code 28.84 authorizes a fee for each Letter of Authorization issued by the King County Department of Natural Resources and Parks. The current fee for issuance of a Letter of Authorization is $950. King County will send you an invoice for this amount.

If you have any questions about this authorization or your construction dewatering discharge, please call me at 206-477-5476 or email me at Ryan.Salem@kingcounty.gov. You may also wish to visit our program's Internet pages at: www.kingcounty.gov/industrialwaste.

Thank you for helping support our mission to protect public health and enhance the environment.

Sincerely,

Ryan Salem
Compliance Investigator

Enclosure

cc: Greg Neumann, City of Kirkland

December 18, 2015

CERTIFIED MAIL
RETURN RECEIPT REQUESTED

Nels Hartshorn
Western Pneumatic Tube Company LLC
835 6th St. S.
Kirkland, WA 98033

Issuance of Renewed Wastewater Discharge Permit No. 7604-05 to Western Pneumatic Tube Company LLC by the King County Department of Natural Resources and Parks

Dear Mr. Hartshorn:

The King County Industrial Waste Program (KCIW) has reviewed and processed your application for issuance of an industrial wastewater discharge permit in accordance with Chapter 90.48 RCW as Amended, Public Law 92-500, and King County Code 28.84.060.

The enclosed issued Permit No. 7604-05 covers the wastewater discharge from the Western Pneumatic Tube Company LLC operation located at 835 Sixth Street South, Kirkland, Washington. All discharges from this facility, and actions and reports relating thereto, shall be in accordance with the terms and conditions of this permit.

The enclosed Permit No. 7604-05 supersedes and cancels Permit No. 7604-04 effective December 31, 2015.

King County Code 28.84 authorizes a fee for each Permit issued by the King County Department of Natural Resources and Parks. The current fee for issuance of a Permit is $4,505. King County will send an invoice for this amount.

The main changes to this renewed permit is a change from being catagorized under 40 CFR 433 PSES (Pretreatment Standards Existing Source) to 40 CFR PSNS (Pretreatment Standards New Source). This change results in a lower discharge limit for cadmium. In addition, special conditions were removed that were no longer needed and a special condition requiring annual calibration of flow meter was added.

If you have any questions about this permit or your wastewater discharge, please call Dave Haberman at 206-477-5465, or email him at dave.haberman@kingcounty.gov. You may also wish to visit our program's Internet pages at: www.kingcounty.gov/industrialwaste.

Thank you for helping support our mission to protect public health and enhance the environment.

Sincerely,

Despina Strong
Program Manager

Enclosures

cc: Doug Knutson, Washington State Department of Ecology
Katy Coleman, City of Kirkland
Kristin Painter, King County
Ericka Jones, King County

Permit No.: 7604-05
Issuance Date: December 18, 2015
Effective Date: December 31, 2015
Expiration Date: December 30, 2020

King County

WASTE DISCHARGE PERMIT

Department of Natural Resources and Parks
Industrial Waste Program
201 S. Jackson Street, Suite 513
Seattle, WA 98104-3855

In accordance with the provisions of Chapter 90.48 RCW as amended,
Public Law 92-500, and King County Code 28.84.060,
a Waste Discharge Permit is issued to:

Western Pneumatic Tube Company LLC

Facility location:	835 Sixth St. S. Kirkland, WA 98033
Business hours phone:	425-822-8271
Emergency (24-hour) phone:	425-822-8271
Mailing address:	835 Sixth St. S. Kirkland, WA 98033

Permission is hereby granted to discharge industrial wastewater from the above-identified facility into the King County sewerage system in accordance with the effluent limitations and monitoring requirements set forth in this permit.

This permit is based on information provided in the permit application, which together with the following conditions and requirements are considered part of the permit. All requirements and ordinances of King County pertaining to the discharge of wastes into the King County sewerage system are hereby made a condition of this permit. All discharges and activities authorized herein shall be consistent with the terms and conditions of this permit.

This permit is not transferable without authorization from the King County Industrial Waste Program (KCIW). Failure to provide advance notice of a transfer renders this waste discharge permit voidable on the date of facility transfer.

By _____
Despina Strong, Industrial Waste Program Manager

TABLE OF CONTENTS

S1 Emergency Contacts

S2 Permit Summary and Company Identification

S3 Special Conditions or Compliance Schedule

S4 Effluent Limitations and Self-Monitoring Requirements

S5 Sample Site Access and Identification

S6 Notification Requirements

S7 Monitoring and Record Keeping

S8 Operations and Maintenance

S9 General Conditions

S10 Washington State Department of Ecology Conditions

S11 90-Day Report Requirements

S12 TTO Definition and Reporting Requirements

Company Fact Sheet

King County Code – Title 28

King County Local Limits

S1. EMERGENCY CONTACTS

KING COUNTY

Industrial Waste Program (8 a.m. – 5 p.m., weekdays):	206-477-5300
Dave Haberman, Industrial Waste Compliance Investigator:	206-477-5465
Despina Strong, Industrial Waste Program Manager:	206-477-5444

Your emergency contact after 5 p.m. weekdays and on weekends is:

South Treatment Plant:	206-263-1760

If unable to reach anyone at this number call:

West Point Treatment Plant:	206-263-3801

WASHINGTON STATE DEPARTMENT OF ECOLOGY

24-Hour emergency spill phone number:	425-649-7000

S2. PERMIT SUMMARY AND COMPANY IDENTIFICATION

A. Summary Information

The following industrial waste discharge sites have been identified for this facility:

Sample Site No.	*Limit Type*	*Daily Maximum Discharge Volume (gpd)*	*Description*
A20061	433 PSNS	7,980	Tap on the discharge pipe
A20063	King County Local Limits	20	Spigot on silver recovery unit

Effluent limitations and self-monitoring requirements for this sample site are detailed in S4.A of this permit.

B. Reports

Report Name	*Section(s)*	*Due Date*
Monthly self-monitoring reports	S4.A	15th day of each month
90-Day Compliance Report	S11	Submit with next permit application
TTO Pretreatment Baseline Report or Solvent Management Plan	S12.B & S12.C	Submit with next permit application
TTO Certification and Solvent Management Plan Update	S12.D & S12.E	June 30 and December 31 each year
14-Day Report: Discharge or permit violation	S4.D	Within 14 days after a discharge or permit violation becomes known
5-Day Report: Slug discharge or spill	S6.A	Within five days after a slug discharge or spill
Hazardous waste discharge notification	S6.D	For all other wastes, within 90 days after waste is identified through RCRA
Washington State Department of Ecology Dangerous Waste Reports	S6.D	As requested by KCIW
Installation/Upgrade of Pretreatment System Report	S6.C	Prior to installation or upgrade
Slug/Spill Control Plan	S6.B	As requested by King County
Compliance with Best Management Practices (BMPs)	S3	As requested by King County

C. Major Changes in the Renewed Permit

This renewed permit contains the following major changes since last issuance:

1. The limit type for site A20061 was changed from 40 CFR 433 PSES to 40 CFR 433 PSNS.

2. Removed special conditions that were no longer needed and added standard special condition requiring annual calibration of flow meter.

D. Company Identification

SIC Code Nos.:	3498/3317
Hazardous Waste Generator No.:	WAD009251323
Industry Type:	Metal Finishing - CFR 433 PSNS

S3. SPECIAL CONDITIONS OR COMPLIANCE SCHEDULE

A. Flow Meter Calibration

At least annually, Western Pneumatic Tube Company LLC shall verify the calibration of the flow meter used to calculate the discharge volume from the industrial wastewater treatment system. Meter calibration records must be maintained on site for a minimum of three years.

S4. EFFLUENT LIMITATIONS & SELF-MONITORING REQUIREMENTS

A. Effluent Limitations and Self-Monitoring Requirements:

1. The permittee shall comply with the following discharge limits and monitor its discharges to the King County sewerage system as specified below.

Sample Site No.	*Limit Type*	*Sample Site Description*
A20061	433 PSNS	Tap on the discharge pipe

Parameter	*Daily Average (mg/L)*	*Instantaneous Maximum (mg/L)*	*Maximum Monthly Average (mg/L)*	*Maximum Loading[1] (lbs/day)*	*Sampling Frequency*	*Sample Type*
Arsenic, Total[2]	1.0	4.0	NA	0.07	NA	NA
Cadmium, Total	0.11	0.6	0.07	0.01	NA	NA
Chromium, Total	2.75	5.0	1.71	0.18	Monthly	Composite[3]
Copper, Total	3.0	8.0	2.07	0.20	NA	NA
Lead, Total	0.69	4.0	0.43	0.05	NA	NA
Mercury, Total	0.1	0.2	NA	0.01	NA	NA
Nickel, Total	2.5	5.0	2.38	0.17	Monthly	Composite
Silver, Total	0.43	3.0	0.24	0.03	NA	NA
Zinc, Total	2.61	10.0	1.48	0.17	NA	NA
Cyanide, Total	1.2	NA	0.65	NA	NA	NA
Cyanide, Amenable	0.86	3.0	0.32	NA	NA	NA
Nonpolar FOG	100	NA	NA	NA	NA	NA
Total Toxic Organics	2.13	NA	NA	NA	NA	NA

pH (s.u.)	*Daily Minimum*	*Minimum*	*Maximum*	Each batch	Grab
	5.5	5.0	12.0		

Daily Maximum Discharge Volume (gpd)	*Industrial*	*Other[4]*	*Total*	Continuous	In-line meter
	7,980	0	7,980		

[1] Applicable poundage limit for each parameter equals the daily average concentration in mg/L, multiplied by the flow in million gallons per day, multiplied by 8.34. A maximum loading of 0.01 is listed whenever the calculated poundage limit is 0.01 or less.
[2] For the determination of total metals (which are equivalent to total recoverable metals) the sample is not filtered before processing.
[3] Flow proportional sampling is required for this site, see S4.A.6.a.ii.

A. Effluent Limitations and Self-Monitoring Requirements (continued):

2. The permittee shall comply with the following discharge limits and monitor its discharges to the King County sewerage system as specified below.

Sample Site No.	***Limit Type***	***Sample Site Description***
A20063	King County Local Limits	Spigot on silver recovery unit

Parameter	***Daily Average (mg/L)***	***Instantaneous Maximum (mg/L)***	***Maximum Loading[1] (lbs/day)***	***Sampling Frequency***	***Sample Type***
Arsenic, Total[2]	1.0	4.0	0.01	NA	NA
Cadmium, Total	0.5	0.6	0.01	NA	NA
Chromium, Total	2.75	5.0	0.01	NA	NA
Copper, Total	3.0	8.0	0.01	NA	NA
Lead, Total	2.0	4.0	0.01	NA	NA
Mercury, Total	0.1	0.2	0.01	NA	NA
Nickel, Total	2.5	5.0	0.01	NA	NA
Silver, Total	1.0	3.0	0.01	NA	NA
Zinc, Total	5.0	10.0	0.01	NA	NA
Cyanide, Amenable	2.0	3.0	NA	NA	NA
Nonpolar FOG	100	NA	NA	NA	NA

pH (s.u.)	***Daily Minimum***	***Minimum***	***Maximum***	NA	NA
	5.5	5.0	12.0		

Daily Maximum Discharge Volume (gpd)	***Industrial***	***Other[3]***	***Total***	NA	Estimate
	20	0	20		

[1] Applicable poundage limit for each parameter equals the daily average concentration in mg/L, multiplied by the flow in million gallons per day, multiplied by 8.34. A maximum loading of 0.01 is listed whenever the calculated poundage limit is 0.01 or less.

[2] For the determination of total metals (which are equivalent to total recoverable metals) the sample is not filtered before processing.

3. A self-monitoring report of all required and nonrequired sampling must be filed no later than the 15th day of the time period following the reporting period (i.e., the 15th day of the following month for monthly reports; January 15, April 15, July 15, and October 15 for quarterly reports; January 15 and July 15 for semiannual reports; and January 15 for annual reports). The permittee shall use the KCIW self-monitoring form to submit results unless an alternate form is approved by KCIW. If no discharge has occurred during the sampling period, the report shall be submitted notifying KCIW that no discharge has occurred.

4. The total volume discharged for any processing day shall be calculated by reading the volume passing through meter number 44398538 or shall be estimated using another KCIW approved method. The total volume for each processing day on which metal samples are collected shall be reported on self-monitoring reports. The total monthly discharge volume shall be reported on self-monitoring reports.

5. Volume and waste type from all batch discharges shall be recorded on the self-monitoring form.

6. For self-monitoring, the permittee shall collect composite samples in accordance with the following methods:

    a. Heavy metals and organics parameters (other than volatile organics):

        i. If time-proportioned composite sampling is authorized, a composite sample shall consist of four or more grab samples of equal volume collected at least 15 minutes apart and no more than two hours apart throughout the processing day from a well-mixed effluent chamber.

        ii. A flow-proportioned composite sample shall mean a sample composed of grab samples collected continuously or discretely, by hand or machine, in proportion to the flow at the time of collection or to the total flow since collection of the previous grab sample. The grab sample volume or frequency of grab collection may be varied in proportion to flow.

    b. A cyanide composite sample shall consist of four grab samples of equal volume collected at least 15 minutes apart and no more than two hours apart from a well-mixed effluent chamber. Each aliquot shall be collected, treated, and preserved in the field in accordance with 40 CFR 136 and 403 appendix E. Treated aliquots may be collected into a single container and analyzed as one sample.

c. For volatile organic analysis (VOA), a composite sample shall consist of four grab samples of equal volume collected at least 15 minutes apart and no more than two hours apart from a well-mixed effluent chamber. Each aliquot shall be collected and preserved in the field in accordance with 40 CFR 136. The individual grab samples may be composited (at the laboratory) prior to analysis.

d. The three nonpolar fats, oils, and grease (FOG) grab samples shall be of equal volume, collected at least five minutes apart, and analyzed separately. When using U.S. EPA approved protocols specified in 40 CFR Part 136, the individual grab samples may be composited (at the laboratory) prior to analysis. The result of the composite sample or the average of the concentrations of the three grab samples may be reported as Total FOG unless the value is 100 mg/L or greater, in which case the concentration of nonpolar FOG must be reported.

e. For situations where the only discharge for the 24-hour period is of short duration (e.g., batch discharge), resulting in the inability to collect composite samples that meet the definitions described in Number 5.a-c above, the permittee shall collect grab samples every 15 minutes during the duration of the discharge. Regardless of the number of aliquots making up this sample, it will be used to evaluate compliance with daily average limits.

7. Discharges of greater than pH 12 are prohibited unless the permittee obtains written approval (email is sufficient) from KCIW prior to discharge and is subject to special conditions to protect worker safety, the collection system and treatment works.

8. Should an automatic pH recording system fail (if required by permit or compliance order), the permittee shall manually check the pH at least four times per hour. Any discharge without a pH record shall be considered a violation of this permit.

B. Nonrequired Self-Monitoring

All sampling data collected by the permittee and analyzed using procedures approved by 40 CFR 136 or approved alternatives shall be submitted to KCIW whether required as part of this permit or done voluntarily by the permittee.

C. Violation Criteria

1. Wastewater from regulated processes shall comply with the effluent limitations prior to dilution with other wastewaters unless a fixed alternative

discharge limit is approved by KCIW. (See Section S8.C.4 for further information about dilution.)

2. A review of any violation will include consideration of testing accuracy prior to enforcement action.

3. The more restrictive limitation (concentration or mass) shall prevail for determining violations.

4. Daily average and maximum monthly average limits apply to composite samples and to grab samples from short-term batch discharges.

5. Instantaneous maximum limits apply to grab samples, with the exception of grab samples from short-term batch discharges.

6. The instantaneous minimum pH limit is violated whenever any single grab sample or any instantaneous recording is less than pH 5. The daily minimum pH limit is violated whenever any continuous recording of 15 minutes or longer remains below pH 5.5 or when each pH value of four consecutive grab samples collected at 15-minute intervals or longer within a 24-hour period remains below pH 5.5.

7. The limit for nonpolar FOG (mineral origin) is violated when the arithmetic mean of the concentration of three grab samples (taken no more frequently than in five minute intervals), or when the result of a composite sample exceeds 100 mg/L.

D. <u>Response when Violations are Detected</u>

1. When monitoring data shows a violation, the permittee shall:

   a. Take immediate action to stop the violation and notify KCIW within 24 hours of learning of the violation.

   b. Collect a sample and submit new data to KCIW within 14 days of becoming aware of the violation.

   c. Submit a written report within 14 days of learning of the violation (*14-Day Report*). The report should explain the cause of the violation and corrective actions taken to respond to the violation and ensure ongoing compliance.

2. In the event the permittee is unable to comply with any of the conditions of this permit because of a breakdown of equipment or facilities, an accident

caused by human error, negligence, or any other cause, such as an act of nature, the permittee shall:

a. Take immediate action to stop, contain, and clean up the unauthorized discharges and correct the problem.

b. Immediately notify KCIW and, if after 5 p.m. weekdays and on weekends, call the emergency King County treatment plant phone number in Section S1 so steps can be taken to prevent damage to the sewerage system.

c. Submit a written report within 14 days of the event (*14-Day Report*) describing the breakdown, the actual quantity and quality of resulting waste discharged, corrective action taken, and the steps taken to prevent a recurrence.

3. Whenever an effluent check shows a pH violation, as defined in King County Code 28.84.060.N "Violations," the permittee shall take immediate steps to bring the discharge back into compliance. If this is not possible, the permittee shall cease discharge.

4. Compliance with these requirements does not relieve the permittee from responsibility to maintain continuous compliance with the conditions of this permit or the resulting liability for failure to comply.

E. <u>Limitations Applicable to All Sites</u>

1. General

The permittee's discharge shall not interfere with the operation of the King County sewerage system, cause King County to exceed its NPDES permit limits, or endanger local utility or King County sewer workers.

The permittee's discharge shall not violate any discharge standard, limitation, or specific prohibition of King County Code 28.84.060 or local discharge limits applicable on the date of discharge. (See Section 28.84.060.D-F of King County Code.)

Prohibitions previously referenced include, but are not limited to, substances causing fire or explosion hazard, flow obstruction, excess oxygen demand, and toxic vapors.

Limitations listed in Section S4 include, but are not limited to, restrictions on settleable solids, organic compounds, hydrogen sulfide, and polar FOG.

2. Organic compounds

   No person shall discharge any organic pollutants that result in the presence of toxic gases, vapors, or fumes within a public or private sewer or treatment works in a quantity that may cause acute worker health and safety problems.

   Organic pollutants subject to this restriction include, but are not limited to any organic compound listed in 40 CFR 433.11 (e) Total Toxic Organics (TTO) definition, acetone, 2-butanone (MEK), 4-methyl-2-pentanone (MIBK), and xylenes.

   Dischargers are required to implement good “housekeeping” and best management practices in order to prevent the discharge of a concentrated form of any of the preceding organic pollutants.

F. Responsibility for Compliance

It is the responsibility of the permittee to ensure that all effluent limitations of this permit are met whether or not self-monitoring for the parameter is required.

S5. SAMPLE SITE ACCESS AND IDENTIFICATION

A. Unobstructed access to sample sites shall be available to authorized KCIW personnel during normal operating hours. The permittee shall be responsible for providing alternate sample sites in the event of obstruction of access or upon evidence of tampering with the monitoring equipment.

B. The permittee shall allow KCIW to permanently label the sample sites used to collect wastewater samples.

C. The permittee shall, at all reasonable times, allow authorized representatives of KCIW to enter, inspect, and sample as specified in King County Code 28.84.060.L, “Inspection and Sampling of Industrial Users.”

S6. NOTIFICATION REQUIREMENTS

A. Spills and Slug Discharges

1. The permittee shall notify KCIW immediately in the event of a spill or slug discharge to the sanitary sewer. A written report regarding the cause of the spill and/or slug discharge shall be submitted to KCIW within five days of the date of occurrence. The report should explain the cause of the violation and corrective actions taken to respond to the violation and ensure ongoing compliance. (See Section S8.B for spill and slug discharge control procedures.)

2. Following a spill and/or slug discharge, KCIW may require the submission or modification of a spill/slug control plan.

B. Changes in Discharge Characteristics

The permittee shall inform KCIW prior to any facility or manufacturing changes that will result in:

1. Introduction of new wastewater pollutants

2. Significant alteration in the volume (greater than 20 percent increase from permit application) or character of the pollutants discharged to the King County sewerage system

3. Discharge of waste streams not listed in the permit application

4. Addition of a new point of discharge or a new chemical, process, product, manufacturing line, or waste processing activity

5. Changes in the potential for spill or slug discharges

No change shall be made until plans have been approved and either written permission or a new or modified permit has been received. In no case are any changes permitted that will cause violation of the effluent limitations specified herein.

C. Installation/Upgrade of Pretreatment System

A Professional Engineer's report per WAC 173-240 must be approved prior to installation or upgrade of pretreatment system.

D. Hazardous Wastes

1. Within 180 days following commencement of discharge or permit issuance, whichever is later, the permittee must notify KCIW, the U.S. EPA, and the Washington State Department of Ecology of any discharge of a listed or characteristic RCRA hazardous waste. Identifying the listed or characteristic RCRA hazardous wastes on the permittee's wastewater discharge permit application serves as notice to KCIW. This is a one-time notification requirement. The contents of the notification may vary according to the quantity of waste discharged. (See "Notification of the Discharge of Hazardous Wastes" in King County Code 28.84.060.)

2. Whenever the U.S. EPA publishes new RCRA rules identifying additional hazardous wastes or new characteristics of hazardous wastes, the permittee must notify KCIW, the U.S. EPA, and the Washington State Department of Ecology if any of these wastes are discharged to the King County sewerage system. Notification must occur within 90 days of the effective date of the published regulation.

E. Continuing Discharge after Permit Expiration Date

This permit does not authorize discharge after its expiration date. If the permittee wishes to continue discharge after the expiration date, an application must be filed for reissuance of this permit at least 180 days prior to the expiration date. If the permittee submits its re-application in the time specified herein, the permittee shall be deemed to have an effective waste discharge permit or authorization until KCIW issues or denies the new waste discharge permit. If the permittee fails to file its re-application in the time period specified herein, the permittee will be deemed to be discharging without a discharge permit after the current permit's expiration date.

S7. MONITORING AND RECORD KEEPING

A. Record Keeping and Retention

1. The permittee shall maintain records relating to all permitted discharges to the King County sewerage system including routine maintenance, waste disposal dates, manifests, self-monitoring reports, analytical lab results, pH monitoring records, and flow records.

2. All records required by the permit shall be available for review at reasonable times by authorized representatives of KCIW.

3. Records of all such testing shall be retained for a period of three years unless litigation or the direction of KCIW requires an extension of that time.

B. Recording of Results

For each measurement or sample taken to comply with this permit, the permittee shall record the following information:

1. Date, exact place, and time of sampling

2. Dates the analyses were performed

3. Person who performed the analyses

4. Analytical techniques or methods used

5. Results of all analyses

C. Representative Sampling

Samples and measurements taken to meet the requirements of this condition shall be representative of the volume and nature of the monitored discharge.

D. Test Procedures

All analyses shall be performed in accordance with procedures established by the administrator of the U.S. EPA pursuant to Section 304(g) of the federal Clean Water Act and contained in 40 CFR Part 136 and amendments thereto or with any other test procedure approved in writing by the U.S. EPA administrator, and/or KCIW. In all cases, except total dissolved sulfide, the detection limit shall be well below the discharge limit. Where 40 CFR Part 136 does not include a sampling or analytical technique for the pollutant in question, sampling and analysis shall be

performed in accordance with the procedures set forth in the U.S. EPA publication entitled *Sampling and Analysis Procedures for Screening of Industrial Effluents or Priority Pollutants*, April 1977 or *Standard Methods*, latest edition and amendments thereto, or with any other sampling and analytical procedures approved by the U.S. EPA.

E. Lab Accreditation

All self-monitoring data submitted to KCIW that required a laboratory analysis must have been performed by a laboratory accredited by the Washington State Department of Ecology for each parameter tested. This does not apply to field measurements performed by the permittee such as pH, temperature, flow, atmospheric hydrogen sulfide, total dissolved sulfides, settleable solids by Imhoff cone, or process control information.

F. Falsifying Information

The act of knowingly falsifying, tampering with, or knowingly rendering inaccurate any monitoring device, report, or method required pursuant to the federal pretreatment standards, King County Code 28.84.060, or special conditions of this permit shall constitute a violation of this permit, and shall be subject to the legal remedies available under “Revocation of Permit or Authorization” and “Penalties and Enforcements” in King County Code 28.84.060.

G. Toxicity Testing

If KCIW is required by the Washington State Department of Ecology to determine the source of a pattern of acute toxicity pursuant to its treatment plant NPDES permit, the permittee may be required to test its effluent for toxicity according to procedures to be determined by KCIW.

H. Signatory Requirements for Industrial User Reports

Any report required by this permit shall meet the signatory and certification requirements listed in King County Code 28.84.060 and King County Code 28.82.

S8. OPERATIONS AND MAINTENANCE

The permittee shall use waste preventative practices to reduce or eliminate contaminant loading to the King County sewerage system. These practices shall include proper chemical storage, spill prevention and notification, and maintenance and operation of any required pretreatment equipment.

A. Chemical Storage

Chemical solutions, solid chemicals, waste materials, oils, and solvents shall be stored in a manner that will prevent the entry of these materials into the King County sewerage system.

1. Non-compatible chemicals shall be segregated and securely stored in separate containment areas that prevent mixing of incompatible or reactive materials.

2. The permittee shall install shut-off devices to all drains in any hazardous waste storage areas.

3. Chemicals shall be dispensed only in roofed and bermed areas that eliminate potential spills to the King County sewerage system.

4. All empty barrels that have not been cleaned (steam-cleaned or triple-rinsed) shall be adequately stoppered and stored in an upright position.

5. Process tanks shall be located in a bermed, roofed, secured area capable of containing 110 percent of the volume of the largest tank. The permittee shall ensure that process solutions are used and stored in such a manner as to minimize spills of concentrated solutions to the sanitary sewer.

B. Spill or Slug Discharge Control Procedures (See Section S6.A)

1. In the event of a concentrated solution spill such as a tank failure, the permittee shall not discharge any spilled solution to the metropolitan sewer system unless laboratory test results indicate that the substance meets the conditions of this permit and the permittee receives approval from KCIW.

2. Concentrated waste or spilled chemicals that do not meet, or are not treated to meet, the discharge conditions of this permit shall be transported off site for disposal at a facility approved by the Washington State Department of Ecology or appropriate county health department.

3. The permittee shall maintain and inspect all process solution tanks on a regular basis. Any leaks shall be repaired promptly.

4. The permittee shall use spill prevention practices to preclude the discharge of liquids, solids, or gases which by reason of their nature or quantity are, or may be, sufficient either alone or by interaction with other substances to cause fire or explosion.

5. All process tanks and chemical storage containers shall be accurately labeled. Emergency phone numbers of King County, the fire department, the permittee's 24-hour corporate contact, and Washington State Department of Ecology shall be posted at all sites that KCIW requires.

6. The permittee shall ensure that concentrated waste from process tank filters and other equipment is prevented from entering the sanitary sewer unless it is treated to meet the discharge conditions of this permit.

7. The permittee shall maintain and use product recovery options such as drag-out rinses for each plating bath or process as required to meet the discharge conditions of this permit. Recovered materials shall not be discharged to the sanitary sewer unless they are treated to meet the discharge conditions of this permit.

C. Pretreatment Equipment Maintenance and Operations

1. All pretreatment systems used to bring the permittee's discharge into compliance with King County's discharge limitations shall be maintained continuously in satisfactory and effective operations by the permittee at the permittee's expense, and shall be subject to periodic inspections by authorized KCIW personnel. These systems shall be attended at all times during discharge to the King County sewerage system. In the event that such equipment fails, the permittee must notify KCIW immediately and take spill prevention precautions.

2. The permittee shall not initiate construction or modification of a pretreatment system prior to receiving KCIW approval of plans and specifications per WAC 173-240. In addition, KCIW may require an engineering report and an operations and maintenance manual.

3. KCIW shall be contacted before the beginning of any limited experimental modifications or new equipment testing that could reasonably be expected to affect effluent quality or quantity. This experimental work shall proceed only after securing written approval from KCIW and following the permittee's adherence to any applicable special conditions.

4. The effluent limitations specified in this permit are to be met by treatment of the wastes for pollutant removal. The use of municipal water, groundwater, seawater, stormwater, or other materials, including waste products, for the purpose of diluting a waste to achieve those limitations is prohibited.

5. The permittee shall adequately maintain and efficiently operate all treatment or control facilities or systems installed or used by the permittee to achieve compliance with the terms and conditions of this permit.

D. Water/Sewer Meter Requirements

The permittee shall obtain or maintain access to a water or sewer meter that can provide accurate information regarding industrial process wastewater and cooling water discharge to the sewer. Another method of volume determination may be used only upon approval by KCIW.

E. Solid Waste

1. The permittee shall handle and dispose of all solid waste material (as defined in WAC 173-304-100) not otherwise authorized by this permit in such a manner as to prevent its entry into the King County sewerage system.

2. All covers, screening devices, sumps, hoppers, conveyors, and other facilities provided for the recovery and handling of solid wastes are to be maintained in an efficient operating condition.

F. Stormwater

Stormwater, surface water, groundwater, and roof runoff shall be excluded, except where specifically authorized by this permit or King County Code 28.84.060, from the King County sewerage system.

S9. GENERAL CONDITIONS

A. The discharge of any pollutant more frequently than, or at a level in excess of, that identified and authorized by this permit shall constitute a violation of the terms and conditions of this permit. Whenever the permittee refuses to take corrective action or continues the violating condition, the imposition of civil penalties including fines up to $10,000 for each violation per day and/or termination of this permit may result. Termination of this permit may require disposal of the industrial waste in some manner other than into the public sewer, private sewer, or side sewer tributary to the King County sewerage system at the expense of the person holding the permit. Any person causing damage to a public sewer or treatment facility by discharges in violation of the terms and conditions of this permit shall be liable for any such damage incurred by King County as a result of such damage or discharge. Where criminal enforcement action is considered in a particular case, that case may be referred to state or federal authorities.

B. The diversion or bypass of any discharge from any pretreatment facility utilized by the permittee to maintain compliance with the terms of this permit is prohibited except where unavoidable to prevent loss of life or severe property damage. The procedure outlined in Section S4.D shall be followed in case of such a diversion or bypass.

C. After notice and opportunity for a hearing, this permit may be modified, suspended, or revoked in whole or in part during its terms for those causes cited in King County Code 28.84.060.

D. If a toxic standard or prohibition (including any schedule of compliance specified in such effluent standard or prohibition) is established under Section 307(a) of the federal Clean Water Act for a toxic pollutant, which is present in the discharge authorized herein, and such standard or prohibition is more stringent than any limitation upon such pollutant in this permit, this permit will be revised or modified in accordance with the toxic effluent standard or prohibition and the permittee shall be so notified. Section 307(a) requires that the administrator of the U.S. EPA shall promulgate effluent standards (or prohibitions) for toxic pollutants that he or she has listed as such.

E. Nothing in this permit shall be construed as excusing the permittee from compliance with any applicable federal, state, or local statutes, ordinances, or regulations.

F. All requirements and ordinances of the U.S. EPA and the Washington State Department of Ecology pertaining to hazardous and toxic wastes, disposal facilities, and discharge of wastes into the King County sewerage system, are hereby made a condition of this permit.

S10. WASHINGTON STATE DEPARTMENT OF ECOLOGY CONDITIONS

This permit does not constitute authority for discharge into waters of the state. Any such discharge is subject to enforcement action by the Washington State Department of Ecology.

Upon issuance of this permit, the permittee assumes the responsibility to abide by the following environmental requirements and any other appropriate regulations stipulated by the Department of Ecology. **The Department of Ecology retains authority to enforce these permit conditions (RCW 70.105 and RCW 90.48).**

A. Conditions to Protect Ground and Surface Waters

1. Contaminated waters or wastes shall not be discharged to state waters.

2. Boiler blow down and water shall not be discharged to state waters.

3. Solid chemicals, chemical solutions, waste materials, oils, and solvents shall be stored in a manner that will prevent the entry of these materials into state, ground, or surface waters, and in a manner that will prevent spillage by overfilling, tipping, or rupture.

4. The permittee shall handle and dispose of all solid waste material in such a manner as to not cause any adverse effect on ground or surface water quality.

5. Filtered solids or sludge shall be stored in such a manner that drainage from this material is prevented from either draining across public rights-of-way or entering the local storm drain system or the groundwater.

6. No emulsifiers or dispersants are to be used on waters of the state without approval from the Department of Ecology.

7. If corrosive processing solutions are used, the processing/plating floor shall be sealed with corrosion resistant material that prevents leakage. This coating shall be repaired or replaced as needed.

Questions regarding the implementation of conditions outlined in Section S10 should be directed to the regulatory authority, the Washington State Department of Ecology, at 425-649-7000 (Northwest Regional Office, 3190 160th Avenue SE, Bellevue, Washington 98008-5452).

S11. 90-DAY REPORT REQUIREMENTS

In order to comply with 40 CFR 403, the general pretreatment regulations, the permittee shall submit the following information no later than 90 days after the commencement of discharge. For permit renewals, the permittee shall submit the following information with the application for renewal. This information along with your permit application will serve as the 90-Day Report for heavy metal compliance and the Total Toxic Organics (TTO) Baseline Report.

A. Your statement indicating whether the discharge limits in Section S4, "Effluent Limitations and Self-Monitoring Requirements," of this permit are being met on a consistent basis, and if not, what additional operations, maintenance, or pretreatment efforts are necessary to bring your regulated discharge into compliance.

B. Your statement establishing the shortest reasonable time schedule for making any necessary changes to enable your discharge to be in consistent compliance with the discharge standards. (The schedule must include milestone dates for interim improvements or any other key actions, which will demonstrate that satisfactory progress is being sustained.)

C. Pertinent engineering drawings for pretreatment systems you presently have and/or plan to install, along with operations and maintenance information pertinent to attainment of your discharge limits (if applicable).

D. Your TTO Baseline Report and Solvent Management Plan (where applicable). See Section S12.

E. An analysis of a representative sample of wastewater from the permittee's effluent for cadmium, chromium, copper, nickel, lead, zinc, and cyanide. See 40 CFR 403.12. A minimum of four grab samples must be used for cyanide. For metals the sample shall be a 24-hour flow-proportioned composite. If the permittee can show that flow proportioning is infeasible, time composites consisting of a minimum of four grab samples may be used.

F. Notification analysis of routine batch discharges, which:

1. Lists the tanks that are routinely discharged with or without treatment

2. Lists frequency and volume of the batch discharge from each tank

3. Lists results from cadmium, chromium, copper, nickel, lead, and zinc testing of a representative sample from each routine batch discharge. The representative sample shall consist of grab samples collected at the beginning, middle, and end of each discharge.

G. Your Washington State Hazardous Waste Generator number.

S12. TTO DEFINITION AND REPORTING REQUIREMENTS

A. TTO Definition (from 40 CFR 413.02 and 433.11)

TTO shall mean total toxic organics, which is the summation of all quantifiable values greater than 0.01 milligrams per liter for the following toxic organics:

Acenaphthene
Acrolein
Acrylonitrile
Benzene
Benzidine
Carbon tetrachloride (tetrachloromethane)
Chlorobenzene
1,2,4-trichlorobenzene
Hexachlorobenzene
1,2-dichloroethane
1,1,1-trichloroethane
Hexachloroethane
1,1-dichloroethane
1,1,2-trichloroethane
1,1,2,2-tetrachloroethane
Chloroethane
Bis (2-chloroethyl) ether
2-chloroethyl vinyl ether (mixed)
2-chloronapthalene
2,4,6-trichlorophenol
Parachlorometa cresol
Chloroform (trichloromethane)
2-chlorophenol
1,2-dichlorobenzene
1,3-dichlorobenzene
1,4-dichlorobenzene
3,3-dichlorobenzidine
1,1-dichloroethylene
1,2-trans-dichloroethylene
2,4-dichlorophenol
1,2-dichloropropane
1,3-dichloropropylene (1,3-dichloropropene)
2,4-dimethylphenol
2,4-dinitrotoluene
2,6-dinitrotoluene
1,2-diphenylhydrazine
Ethylbenzene
Fluoranthene
4-chlorophenyl phenyl ether
4-bromophenyl phenyl ether

Bis (2-chloroisopropyl) ether
Bis (2-chloroethoxy) methane
Methylene chloride (dichloromethane)
Methyl chloride (chloromethane)
Methyl bromide (bromomethane)
Bromoform (tribromomethane)
Dichlorobromomethane
Chlorodibromomethane
Hexachlorobutadiene
Hexachlorocyclopentadiene
Isophorone
Naphthalene
Nitrobenzene
2-nitrophenol
4-nitrophenol
2,4-dinitrophenol
4,6-dinitro-o-cresol
N-nitrosodimethylamine
N-nitrosodiphenylamine
N-nitrosodi-n-propylamine
Pentachlorophenol
Phenol
Bis (2-ethylhexyl) phthalate
Butyl benzyl phthalate
Di-n-butyl phthalate
Di-n-octyl phthalate
Diethyl phthalate
Dimethyl phthalate
1,2-benzanthracene (benzo(a)anthracene)
Benzo(a)pyrene (3,4-benzopyrene)
3,4-Benzofluoranthene (benzo(b)fluoranthene)
11,12-benzofluoranthene (benzo k) fluoranthene)
Chrysene
Acenaphthylene
Anthracene
1,12-benzoperylene (benzo(ghi)perylene)
Fluorene
Phenanthrene
1,2,5,6-dibenzanthracene (dibenzo(a,h)anthracene)
Indeno (1,2,3-cd) pyrene) (2,3-o-phenylene pyrene)
Pyrene
Tetrachloroethylene
Toluene
Trichloroethylene
Vinyl Chloride (chloroethylene)
Aldrin
Dieldrin
Chlordane (technical mixture and metabolites)

4,4-DDT
4,4-DDE (p,p-DDX)
4,4-DDD (p,p-TDE)
Alpha-endosulfan
Beta-endosulfan
Endosulfan sulfate
Endrin
Endrin aldehyde
Heptachlor
Heptachlor epoxide
(BHC-hexachlorocyclohexane)
- Alpha-BHC
- Beta-BHC
- Gamma-BHC
- Delta-BHC

Polychlorinated biphenyls (PCB)
- PCB-1242 (Aroclor 1242)
- PCB-1254 (Aroclor 1254)
- PCB-1221 (Aroclor 1221)
- PCB-1232 (Aroclor 1232)
- PCB-1248 (Aroclor 1248)
- PCB-1260 (Aroclor 1260)
- PCB-1016 (Aroclor 1016)

Toxaphene
2,3,7,8-Tetrachlorodibenzo-p-dioxin (TCDD)

B. <u>Requirements for TTO Baseline Report</u>
(to be included in 90-Day Report)

1. A statement certifying that the permittee does not use any chemical listed in the definition of TTO (as stated in 40 CFR 413.02 or 433.11) in any area that drains to the sanitary sewer.
   OR
2. An analysis of the permittee's effluent for those chemicals used in the permittee's facility that are listed in the definition of TTO.
   OR
3. An analysis of the permittee's effluent for TTO as defined in 40 CFR 413.02 or 433.11.

C. <u>Requirements for Solvent Management Plan</u>

Required as part of the 90-Day Report for companies that choose to certify that they do not discharge TTOs in lieu of performing laboratory analyses.

Your Solvent Management Plan must include:

1. Which TTOs are used

2. Method of disposal, i.e., reclamation, contract hauling, or incineration

3. Procedures that are used to ensure that TTOs do not routinely spill or leak into the wastewater

Where applicable, the following reports are due each June 30 and December 31.

D. Requirements for Semiannual Updates of Solvent Management Plan

List any changes to the last plan on file or state there are no changes to the plan.

E. Biannual TTO Monitoring Requirements

1. Choose 1, 2, or 3 from the requirements for TTO Baseline Report.

2. If you choose certification use the language below.

CERTIFICATION LANGUAGE FOR TTO REPORT

In lieu of submitting monitoring results, the permittee may make the following certification statement:

> "Based on my inquiry of the person or persons directly responsible for my managing compliance with the permit limitation (or pretreatment standard) for total toxic organics (TTO), I certify that, to the best of my knowledge and belief, no dumping of concentrated toxic organics into the wastewaters has occurred since filing of the last discharge monitoring report. I further certify that this facility is implementing the toxic organic management plan submitted to the permitting (or control) authority.
>
> "I certify under penalty of law that this document and all attachments were prepared under my direction or supervision in accordance with a system designed to assure that a qualified personnel properly gather and evaluate the information submitted. Based on my inquiry of the person or persons who manage the system, or those persons directly responsible for gathering the information, the information submitted is, to the best of my knowledge and belief, true, accurate, and complete. I am aware that there are significant penalties for submitting false information including the possibility of fine and imprisonment for knowing violations."

King County

Industrial Waste Program
Company Fact Sheet

December 18, 2015

COMPANY INFORMATION

Company/Agency name: Western Pneumatic Tube Company LLC
Facility address: 835 Sixth St. S.
Kirkland, WA 98033
Mailing address: 835 Sixth St. S.
Kirkland, WA 98033
Treatment plant: South Treatment Plant
Corp. contact & phone: Nels Hartshorn, 425-822-8271
Site contact & phone: Alan Haake, 425-822-8271
Company/Agency type: Metal Finishing - CFR 433 PSNS
Days operating: 270
SIC number: 3498/3317
EPA ID number: WAD009251323
Compliance investigator: Dave Haberman

PERMIT INFORMATION

Permit number: 7604-05
Effective date: **December 31, 2015**
Expiration date: **December 30, 2020**

Description of sample sites, limit types, and discharge volumes:

Sample Site No.	Description	Limit Type	Maximum Discharge Volume (gallons per day)
A20061	Tap on the discharge pipe	433 PSNS	7,980
A20063	Spigot on silver recovery unit	King County Local Limits	20

Total industrial discharge volume (gpd) (add all sites)	8,000

MONITORING FEE PARAMETER

Sample Site No.	Fee Type
A2006	Heavy Metals Fee Parameter (ICR)

PERMIT PROCESSING

Permit number: 7604-05

Action	Date
Application due	July 3, 2015
Application received	July 6, 2015
Application sent to local sewer agency	July 21, 2015
Inspection date	October 8, 2015
Final publication date	November 2, 1990
Published volume	8,000 gallons per day
Draft issued	November 19, 2015
Final issued	December 18, 2015

COMMENTS

Nature of Business
Western Pneumatic Tube Company LLC (WPTCo) manufactures welded tubing made from stainless steels, nickel alloys, aluminum alloys, and titanium alloys. The facility receives raw material in coils and/or sheets then mills, bends, welds, and shapes tubes for a variety of industries (e.g., aircraft, space, irrigation, nuclear energy, solar energy, and chemical and food processing).

Sources of Wastewater
Pickling Process: Some tubes are heat treated in a gas furnace that leaves black soot on the tube. The soot is then removed from the tubes through the pickling process. Wastewater is generated through this process by immersion of tubes in tanks of potassium permanganate, and/or pickle acid (nitric acid and hydrofluoric acid) and a post-pickling rinse tank.

X-Ray Film Development: WPTCo has a quality control lab where tubes are checked for flaws. The wastewater and waste developer are discharged to the sewer. The waste fixer is treated and silver is reclaimed with three silver recovery cartridges in series prior to discharge to the sewer. The system is maintained quarterly by an outside vendor and records of maintenance are kept on site. A new sample site (A20063) was created for this discharge in 2010.

Roof cleaning washwater: WPTCo pressure washes the roof and gutters of the building on a quarterly basis to help maintain compliance with their stormwater permit. This water is captured in a catch basin on their property and manual pumped into a private manhole on site. The volume is limited to approximately 700 gallons per event and sample results for metals and organics are below King County local discharge limits. This water does not go through a regulated sample site and is not monitored.

Condensate from air sparging system: WPTCo has installed ground monitoring wells that extract vapors from the ground below the vapor degreaser which formally used trichloroethylene. Sample results for total metals and organics were taken of the condensate. The sample results

were evaluated and King County determined that the condensate meets King County screening limits without treatment and approves of this discharge. The volume of condensate is estimated to be less than 10 gallons a year. The discharge does not pass through the categorical treatment system and discharges into the sanitary sewer below the vapor degreaser.

Treatment System

Pickling Process: The wash down water contains residues from the pickling process. Rinse water is re-circulated out of rinse tank to limit the amount of fresh water used. All wash down water is contained in a 16,000-gallon sump beneath the floor grating and is pumped as needed (typically once or twice a day) during operation to a holding tank. The wash water and any reject acid from the acid regeneration system are pumped to the treatment tank where hexavalent chromium is chemically altered to trivalent chromium by the addition of iron sulfate. The pH is then adjusted to a range of 7.0-12.0 s.u. by adding sodium hydroxide and heavy metals are precipitated out through the addition of flocculants. The discharge is decanted by opening a valve on the tank allowing the discharge through sample site A20061.

After treatment and discharge, the remaining waste in the treatment tank is pumped to a sludge settling tank for further settling. A filter press removes the sludge and excess filter press water is discharged back to the floor sump. Decant water from this tank is also discharged through the sample site (A20061).

Before the effluent meter, there is an in-line filter to help prevent particles from damaging or interfering with the effluent meter. This filter is cleaned periodically, at least monthly. It was installed in 1990 when the effluent meter was put in. WPTCo does not want to remove the filter and is aware that the compliance sample site is before this filter. King County is aware of this added measure to ensure the effluent meter functions properly and WPTCo understands point of compliance is before the filter.

X-Ray Film Development: The fixer wastewater is treated and silver reclaimed with three silver recovery cartridges in series which are monitored and maintained by a third party. The facility has converted more than half of the wet film processing to digital and hopes to phase out the wet film processing but at this time, a few customers still require film x-ray processing. This site was assigned a sample site (A20063) and included in the permit in 2010.

Compliance History

WPTCo received the Gold Award in 2010, Silver Award in 2011, and Gold Award in 2012, 2013, and 2014. They received a Silver Award in 2011 due to a low pH discharge violation. The violation was caused by an employee leaving a valve open on the spent acid storage tank after transferring acid into the treatment tank. This resulted in approximately 10-50 gallons of untreated acid being discharged. WPTCo implemented a new acid transfer procedure and re-trained employees on the procedure.

Trends in Discharge of Pollutants of Concern

The graphs at the end of this fact sheet show both King County and self-monitoring data for chromium, nickel, daily discharge volumes, and pH levels for the last five years. Other than the

low pH discharge violation in 2011, the pH is consistently above 6.5 and below 12.0. This variance in pH is within the normal range for batch discharges.

The maximum daily discharge is consistently above 3,000 gallons per day (gpd) and below 7,980 gpd except for a low production day in January 2011 and a higher than normal production day in April of 2012 where the discharge was above the published volume of 8,000 gpd but within allowable tolerance of 20% for a one time exceedance.

The data from both King County monitoring and self-monitoring samples for pollutants of concern, chromium and nickel are consistently in compliance with discharge limits. The graph of WPTCo's self-monitoring for nickel shows a time period in 2012 to 2013 where the concentrations were consistently at 0.5 mg/L, which was due to an increased laboratory reporting detection limit when the laboratory needed to dilute samples because of interferences attributed to sodium levels. The source of the sodium was likely the salts from the potassium permanganate bath and/or the sodium hydroxide used to adjust the pH. Since the 0.5 mg/L detection limit is acceptable for the parameter and this event occurred over a relatively short time period, no further investigation was conducted..

Slug and/or Spill Control Plan
WPTCo has large quantities of chemicals on site and is required to have a Slug/Spill Control plan. An updated Slug/Spill Control plan was received November 16, 2015, and is sufficient.

Self-Monitoring Requirements
The company collects monthly composite samples for chrome and nickel. The pH is recorded for each batch discharged. Daily flow and total monthly flow is recorded. The discharge volumes pass through an effluent meter.

King County Compliance Monitoring Program
King County Industrial Waste collects flow proportional composite metal samples semi-annually, grab pH semi-annually, composite (2) CN semi-annually, composite (2) VOA annually and composite BNA's quinquennially.

Monitoring Methods

Physical samples: Composite flow-proportional samples are collected for metals. VOA's and CN are composites of multiple garb samples

pH monitoring: A pH meter is used to measure the grab pH sample

Flow monitoring: Effluent meter

Special Conditions
There is a new special condition for annual flow meter calibration which is standard for companies that use effluent meters to measure flow.

Limit Calculations
WPTCo conducts chemical etching (passivating) of stainless steel, titanium, and nickel base alloy tubes and is regulated under CFR 433 PSNS Metal Finishing Point Source Category, Subpart A., section.17 Pretreatment Standards for New Sources (PSNS). In 1990, WPTCo submitted a request to KCIW to install a system for reclaiming and recycling the pickling acid previously disposed of as hazardous waste. This resulted in the submittal of a new engineering report and WPTCo was directed to re-publish in 1990 and issued a new permit (No. 7604-01) replacing the previous permit No. 7109. However, WPTCo was inadvertently permitted as 433 PSES since 1990 and will now be as 433 PSNS. Using the guidance provided by the U.S. Environmental Protection Agency (EPA) Memo dated September 28, 2006, titled "New Source Dates for Direct and Indirect Dischargers" EPA clarifies what constitutes a New Source. The term "source" means any building, structure, facility, or installation from which there is or may be a discharge of pollutants which commenced after the new source date. In this case, the new source date for indirect dischargers classified under CFR 433 Metal Finishing Subpart A was published on August 31, 1982, and the changes made at the facility with the installation of the pickling acid recovery system occurred in 1990, thus warranting the change from 433 PSES to 433 PSNS.

Changes since the Last Permit
The changes described above result in a change to the daily and monthly average discharge limits for cadmium from 0.5 mg/L to 0.11 mg/L (daily), and the monthly average discharge limit from 0.26 mg/L to 0.07 mg/L. A review of sample results from King County sampling and WPTCo's sampling was done and the results are all non-detect for cadmium. WPTCo was informed of this new change on October 19, 2015.

The roof cleaning wash water and the vapor degreaser extraction well condensate have been added to the fact sheet but not included in the permit as discharge locators because the infrequent discharge, low discharge volumes and because the discharges meet King County local limits without treatment and are not from a categorical process.

Removed Special Condition S3.A, Notification Requirement: This special condition required WPTCo to sample and record pH, volume, date of discharge, and report to King County if the non-contact cooling water from the acid regeneration system was discharged. The company reduced the acid processing temperature, so this special condition is no longer applicable. The special condition to follow best management practices for the x-ray silver recovery process was also removed because the company has an outside vendor maintain the system for compliance and the maintenance records are kept on site for review as needed.

Comments

Publication: Not applicable, company published in 1990.

First draft: No comments received from the component agency.

WPTCo submitted the following corrections and comments to King County via email November 25, 2015:

Correction No. 1- The fact sheet listed PSES in one location and not PSNS, this was corrected.

Correction No. 2- Section S11 referenced Section S3 and should have referenced Section S4, this was corrected.

Comments- A few minor changes to some of the language in the fact sheet were also made . In addition the company had several questions about permit conditions which were answered via an email to the company on December 3, 2015.

Safety

Inspectors are required to wear safety shoes and eye protection.

King County
Wastewater Treatment Division
Industrial Waste Program
Department of Natural Resources and Parks
201 South Jackson Street, Suite 513
Seattle, WA 98104-3855
206-477-5300 Fax 206-263-3001
TTY Relay: 711

September 29, 2017

Jim Tosti
Windward Wendy LLC
805 Kirkland Ave., Suite 200
Kirkland, WA 98033

General Letter of Authorization – Construction: # 40131-01 for Windward Wendy LLC Construction Project to Discharge to the King County Sanitary Sewer

Dear Mr. Tosti:

In accordance with King County Code 28.84.060, King County Industrial Waste Program (KCIW) authorizes the discharge of construction dewatering/process wastewater to the King County sanitary sewer from the Windward Wendy LLC construction project located at 301 Fourth Avenue, Kirkland, WA 98033. This project is required to meet all the limitations, monitoring requirements, and other conditions specified in this authorization.

This authorization is the only KCIW authorization that will be issued for the project identified in your application. This authorization is issued for the maximum duration of two years. It is valid from October 1, 2017, through September 30, 2019, or the duration of this project, whichever comes first. It is the permittee's responsibility to notify KCIW of project closure or any changes with this project.

This authorization alone does not allow you to discharge to the sanitary sewer. You must contact the local sewer agency to obtain approval along with a discharge location before discharging to the sanitary sewer. Wastewater from this project must be discharged to/at the location(s) specified by the local sewer agency. The local sewer agency will assess sewer charges, set flow rate restrictions and may impose additional requirements.

General Conditions

All discharges and activities approved by this authorization shall be consistent with King County Code 28.84.060 and the terms and conditions outlined in this authorization. A copy of this discharge approval, as well as required daily monitoring records, shall be on site and available for review and reference by KCIW or local sewer agency representatives.
This authorization to discharge is based on your agreement and signed application.

This authorization permits the discharge of up to 25,000 gallons per day (gpd) of construction dewatering from the construction site into the sanitary sewer. Discharging pollutants more frequently or in higher concentrations or quantity than authorized in this letter is a violation of the terms and conditions of this authorization. You must contact KCIW in advance and receive authorization before making changes beyond the terms and conditions of this authorization. Examples of changes include:

- Construction dewatering volume above 25,000 gpd.
- Site's surface area generates contaminated stormwater that exceeds one acre in aggregate.
- Site conditions indicate potential for chemical contamination.
- Substantial changes in the quality of the discharged water.
- Discharge of wastes or contaminants from sources other than those permitted herein.

This permit does not constitute authority for discharge into waters of the state. Any such discharge is subject to enforcement action by the Washington State Department of Ecology.

You must allow authorized representatives of KCIW to enter, inspect, and sample as specified in King County Code 28.84.060.L, "Inspection and Sampling of Industrial Users."

You must install an accessible sampling spigot on the discharge pipe from the last treatment unit of the wastewater treatment system. The sample site shall be representative of all industrial waste streams discharged to the sewer from this project. Each sample site shall be accessible to KCIW representatives when discharge to the sewer is occurring.

You must install a totalizing, non-resettable flow meter on all permitted discharge pipes to the sewer or as approved by your local sewer agency. The meters shall account for all industrial waste streams discharged to the sewer from this site.

Discharge Limitations

Parameter	Limitation
Instantaneous maximum discharge rate	To be determined by local sewer agency. Not to exceed 200 gallons per minute or the sedimentation tank flow restriction, whichever is more stringent.
Maximum daily discharge volume	25,000 gpd
Settleable solids	7.0 mL/L
Nonpolar Fats, Oil & Grease (FOG)	100 mg/L
Instantaneous Minimum pH[1]	5.0 s.u.
Daily Minimum pH[2]	5.5 s.u.
Maximum pH	12 s.u.
Soluble Sulfides (Screening Level)	0.1 mg/L

[1] The instantaneous minimum pH limit is violated whenever any single grab sample or any instantaneous recording is less than pH 5.0.

[2] The daily minimum pH limit is violated whenever any continuous recording of 15 minutes or longer remains below pH 5.5 or when each pH value of four consecutive grab samples collected at 15-minute intervals or longer within a 24-hour period remains below pH 5.5.

The water being discharged will not do the following:

- Violate any discharge standard, limitation, or specific prohibition of King County Code 28.84.060 or local discharge limits applicable on the date of discharge (see Section 28.84.060.D-F of the King County Code).
- Contain the odor of solvent, gasoline, or hydrogen sulfide (rotten egg odor), oil sheen, unusual color, or visible turbidity.
- Cause hydraulic overloading conditions of the sewerage conveyance system. During periods of peak hydraulic loading, KCIW or local sewer agency representatives reserve the authority to request that discharge to the sewer be stopped.

You must stop discharging and notify KCIW, by phone at 206-477-5300 or email at info.KCIW@kingcounty.gov, if you exceed any of the discharge limits, or notice odor of solvent, gasoline, or hydrogen sulfide (rotten egg odor), oil sheen, unusual color, or visible turbidity.

Monitoring Requirements

You shall conduct the following self-monitoring requirements for this authorization.

Parameter	Frequency	Sample Type/Method
Discharge volume	Daily	In-line flow meter
Discharge rate	Daily	In-line flow meter
Settleable solids	Daily	Grab by Imhoff cone[1]

All tests, measurements and analyses shall be performed in accordance with procedures established by the administrator of the U.S. Environmental Protection Agency (EPA) pursuant to section 304(g) of the federal Clean Water Act and contained in 40 CFR Part 136 and amendments thereto or with any other test procedure approved in writing by the EPA administrator, and/or KCIW.

Records Management

You will maintain records relating to all permitted discharges to the King County sewerage system including but not limited to routine maintenance, waste disposal dates, manifests, any analytical lab results, monitoring records, and flow records

All records required must be available for review by KCIW and must be kept through the completion of the project.

---

[1] The settleable solids field test by Imhoff cone must be performed as follows:
- Fill cone to one-liter mark with well-mixed sample.
- Allow 45 minutes to settle.
- Gently stir sides of cone with a rod or by spinning. Settle 15 minutes longer.
- Record volume of settleable matter in the cone as mL/L.

Special Conditions

You must implement erosion control best management practices to minimize the amount of solids discharged to the sanitary sewer system. As a minimum precaution, the construction dewatering must be pumped to an appropriately sized settling tank prior to entering the sewer system.

The authorization to discharge is based on your agreement and signed application to comply with the minimum standards outlined in *Minimum Standards for Rectangular Sedimentation Tank Design and Technical memorandum* found on county's webpage[1].

The following two sedimentation tank options may be used, depending on site conditions and project requirements:

1. Rectangular Sedimentation Tank (Flow-Through Discharge)

   The minimum required standards for the flow-through system are:

   - Minimum hydraulic retention time: ≥ 90 minutes
   - Minimum length-to-width ratio (length : width): ≥ 4:1
   - Maximum overflow rate (gallons-per-minute per square foot of surface area): ≤ 1.0 gpm/ft^2
   - Maximum sediment accumulation (level of sedimentation tank water column): ≤ 25%
   - Requirement to add additional sedimentation tanks in parallel for higher flow rates[2].

2. Circular Sedimentation Tank (Batch Discharge):

   At some smaller construction sites, process wastewater is produced intermittently. The minimum required standards for batch discharge area as follows:

   - Minimum 5,000 gallon circular tank, which can accommodate a maximum of five batch discharges per day.
   - At least one hour of quiescent (undisturbed) settling must occur in the tank prior to discharge. During this settling time, no additional process wastewater can be added to the sedimentation tank.
   - Maximum sediment accumulation (level of sedimentation tank water column): ≤ 25%

---

[1] http://www.kingcounty.gov/environment/wastewater/IndustrialWaste/GettingDischargeApproval/Construction/Sedimentation_tanks.aspx.

[2] Example: At 200 gpm flow, to meet the Minimum hydraulic retention time of ≥ 90 minutes, you need a minimum of 18,000 gallons rectangular tank (18,000 gal / 200 gal/min = 90 minute hydraulic retention time). Correspondingly, at 100-gpm flow, you need a 9,000-gallon tank, and at 65 gpm, the tank volume shall be 5850 gallons. If gravity discharge from the tank is not possible, the effective volume of the tank needs to be reduced to the level of the pump intake and under no circumstances can the pump intake be lower than one-half (1/2) of the tank height.

The permittee shall properly operate and maintain all wastewater treatment units to ensure compliance with established discharge limits. Solids accumulation in tanks used for solids settling shall not exceed 25 percent of the tank's working hydraulic capacity. Each tank's working hydraulic capacity is based on the water column height as measured from the bottom of the tank to either the invert elevation of the tank's outlet pipe (gravity discharges) or discharge pump intake (pumped discharges).

General Information

King County Code 28.84 authorizes a fee for each Letter of Authorization issued by the King County Department of Natural Resources and Parks. The current fee for issuance of a Letter of Authorization is $800. King County will send an invoice for this amount.

If you have any questions about this authorization or your construction dewatering discharge, please call us at 206-477-5300, or email us at info.KCIW@kingcounty.gov. You may also visit our program's Internet pages at www.kingcounty.gov/industrialwaste.

Thank you for helping support our mission to protect public health and enhance the environment.

Sincerely,

Dana Heinz
Industrial Waste Compliance Investigator

cc: Dan Wachtler, Wachtler Marshall Inc.
Josh Pantze, City of Kirkland

APPENDIX I

List of Potential Reclaimed Water Users

THIS PAGE INTENTIONALLY LEFT BLANK

Utility Billing

Top 20 Water Users

Sort By: CONSUMPTION

Date Range: 01/01/16 - 12/31/16

Rank	Account No	Name	Service Address	Rate	Consumption
001	4200	SKINNER MGMT COMPANY	1000 CARILLON PT	WC5	9,884.00
002	12535	PORTSMITH CONDOMINIUMS	108 2ND AVE S	WM5	8,167.00
003	49367	HOTEL KIRKLAND LLC	220 KIRKLAND AVE	WC5	7,080.00
004	30664	LAKE WASHINGTON SCHOOL DISTRICT (IRR)	12033 NE 80TH ST	RHI	6,837.00
005	50063	GSIC FORBES CREEK REIT INC APTS	10707 111TH CT NE	WM3	6,402.00
006	13373	CASCADE MEDICAL INVESTORS LTD	10101 NE 120TH ST	WC4	6,326.00
007	21741	SSR WESTERN MTF/TERA APARTMENT	558 CENTRAL WAY	WM5	6,103.00
008	49632	SRMKII LLC	451 7TH AVE S	WC5	5,792.00
009	5551	COSTCO WHOLESALE CORP	8629 120TH AVE NE	RC4	5,112.00
010	14829	LOCHSHIRE CONDO ASSN	12330 NE 92ND LN	RM6	4,955.00
011	47982	KIRKLAND CROSSINGS LLC	10715 NE 37TH CT	WM6	4,659.00
012	7576	PLUM COURT ASSOC	451 4TH AVE S	WM4	4,405.00
013	25293	BOULEVARD	375 KIRKLAND AVE	WM6	4,353.00
014	13386	SAFEWAY INC #1142	12519 NE 85TH ST	RC3	4,294.00
015	46204	TOTEM LAKE HOLDINGS LLC	12321 120TH PL NE	RC3	4,144.00
016	26804	128 STATE STREET LLC	128 STATE ST S	WM6	4,069.00
017	25683	KIRKLAND CENTRAL COA	211 KIRKLAND AVE	WM6	4,061.00
018	4394	LA QUINTA MOTOR INN #676	10530 NORTHUP WAY	WC6	4,014.00
019	46531	ESSEX PORTFOLIO LP	12340 NE 115TH PL	RM5	3,801.00
020	25813	LMJ ENTERPRISES	11845 NE 85TH ST	RHI	3,801.00

Utility Billing

Top 10 Irrigation Users

Display Top: 10

Sort By: CONSUMPTION

Date Range: 01/01/16 - 12/31/16

Rank	Account No	Name	Service Address	Rate	Consumption	Type
001	30664	LAKE WASHINGTON SCHOOL DISTRICT (IRR)	12033 NE 80TH ST	RHI	6,837.00	IRR COM
002	25813	LMJ ENTERPRISES	11845 NE 85TH ST	RHI	3,801.00	IRR COM
003	12930	NORTHWEST UNIVERSITY	11220 NE 53RD ST	WSM	3,091.00	IRR COM
004	6148	CITY OF KIRKLAND-PARKS MNTC	202 3RD ST	WSM	3,038.00	IRR COM
005	23940	LINBROOK BLDGS LLC	10520 NE 38TH PL	WSM	2,948.00	IRR COM
006	50045	GSIC FORBES CREEK REIT INC APT (SP	10815 115TH CT NE	IRRmtf	2,941.00	IRR MTF
007	8429	CITY OF KIRKLAND PARKS MAINT	1818 6TH ST	WSM	2,804.00	IRR COM
008	5912	CITY OF KIRKLAND PARKS MAINT	202 3RD ST	WSM	2,651.00	IRR COM
009	50052	GSIC FORBES CREEK REIT INC APTS	10919 113TH CT NE	IRRmtf	2,608.00	IRR MTF
010	2818	CITY OF KIRKLAND PARKS MAINT	500 8TH ST S	WSM	2,440.00	IRR COM

THIS PAGE INTENTIONALLY LEFT BLANK

APPENDIX J

Public Agency Review Correspondence

THIS PAGE INTENTIONALLY LEFT BLANK

Kenny Gomez

From: Ken McDowell <kmcdowell@woodinvillewater.com>
Sent: Wednesday, September 20, 2017 9:56 AM
To: Kenny Gomez
Subject: RE: City of Kirkland - General Sewer Plan - Adjacent Purveyor Review

Kenny,

I would have to see what you write first. As there is no reference to WWD in the entire document there should be something in the Executive Summary section, Existing Sewer Facilities Section, and the Adjacent Sewer Systems section. If there is discussion about franchise agreements in the document, we have one in place with the City. I assume the reason we were not mentioned is because we were not part of the City the last time the plan was compiled. Seeing how we are such a small portion of your service area it is easy to understand how it happened. If you have any other questions, please let me know.

Thanks,
KMcD

From: Kenny Gomez [mailto:kgomez@rh2.com]
Sent: Wednesday, September 20, 2017 9:38 AM
To: Ken McDowell <kmcdowell@woodinvillewater.com>
Cc: Joshua Pantzke <JPantzke@kirklandwa.gov>
Subject: RE: City of Kirkland - General Sewer Plan - Adjacent Purveyor Review

Thanks Ken. We will get your comments incorporated into the plan.

Should we be anticipating any other comments from the District?

Thanks,
Kenny Gomez, PE
P: 425.951.5416
C: 425.471.9324

From: Ken McDowell [mailto:kmcdowell@woodinvillewater.com]
Sent: Monday, September 18, 2017 1:24 PM
To: Kenny Gomez <kgomez@rh2.com>
Subject: RE: City of Kirkland - General Sewer Plan - Adjacent Purveyor Review

Kenny,

I have taken a quick review of your plan and do not see any mention of the Woodinville Water District anywhere in the document. The District provides water to 1,961 residences in your City limits and also serves sewer to 126 residential homes and 1 commercial account. Granted, this isn't a significant amount, but regardless, should be mentioned. If you have any questions, please let me know.

Thanks,
KMcD

From: Kenny Gomez [mailto:kgomez@rh2.com]
Sent: Friday, September 15, 2017 3:55 PM
To: Ken McDowell <kmcdowell@woodinvillewater.com>
Cc: Joshua Pantzke <JPantzke@kirklandwa.gov>
Subject: City of Kirkland - General Sewer Plan - Adjacent Purveyor Review

Good Afternoon Ken,

Please see attached for a copy of the letter that is being mailed to you regarding review of the City of Kirkland's General Sewer Plan.

If you have any questions, please contact me at (425) 951-5416.

Hope you have a great weekend!

Thanks,

Kenny Gomez, PE | **RH2 Engineering**
Project Engineer
22722 29th Drive SE, Suite 210
Bothell, WA 98021
P: 425.951.5416
kgomez@rh2.com
www.rh2.com

NOTICE OF PUBLIC DISCLOSURE: Public documents and records are available to the public as required under the Washington State Public Records Act (RCW 42.56). Accordingly, this e-mail, in whole or in part, may be subject to disclosure pursuant to the Public Records Act, regardless of any claim of confidentiality, privilege or exemption asserted by a third party.

Kenny Gomez

From: Scott Thomasson <STHOMASSON@REDMOND.GOV>
Sent: Tuesday, October 17, 2017 11:13 AM
To: Kenny Gomez; Jeff Thompson
Cc: Joshua Pantzke
Subject: RE: City of Kirkland - General Sewer Plan - Adjacent Purveyor Review

I Have Jeff Thompson taking a look at this. One issue he asked about is what should the plan say about service areas of Kirkland that will flow into Redmond and service areas of Redmond that will flow into Kirkland. This plan should be the basis of the interlocal agreement that would need to be put into place for Redmond to serve Kirkland's pump station at 132nd.

From: Kenny Gomez [mailto:kgomez@rh2.com]
Sent: Tuesday, October 17, 2017 11:06 AM
To: Scott Thomasson <STHOMASSON@REDMOND.GOV>
Cc: Joshua Pantzke <JPantzke@kirklandwa.gov>
Subject: RE: City of Kirkland - General Sewer Plan - Adjacent Purveyor Review

Hi Scott,

I just wanted to check in with you.

Do you anticipate having any review comments for the City of Kirkland's General Sewer Plan?

Thanks,
Kenny Gomez, PE
P: 425.951.5416
C: 425.471.9324

From: Kenny Gomez
Sent: Friday, September 15, 2017 3:55 PM
To: 'sthomasson@redmond.gov' <sthomasson@redmond.gov>
Cc: 'Joshua Pantzke' <JPantzke@kirklandwa.gov>
Subject: City of Kirkland - General Sewer Plan - Adjacent Purveyor Review

Good Afternoon Scott,

Please see attached for a copy of the letter that is being mailed to you regarding review of the City of Kirkland's General Sewer Plan.

If you have any questions, please contact me at (425) 951-5416.

Hope you have a great weekend!

Thanks,
Kenny Gomez, PE | **RH2 Engineering**
Project Engineer
22722 29th Drive SE, Suite 210

Kenny Gomez

From: Kenny Gomez
Sent: Thursday, November 02, 2017 9:38 AM
To: 'DLane@bellevuewa.gov'
Cc: TKomada@bellevuewa.gov; 'Joshua Pantzke'
Subject: RE: Kirkland General Sewer Plan Comments

Good Morning Doug,

Please see below for responses.

Let me know if there are any further comments.

Thanks,
Kenny Gomez, PE
P: 425.951.5416
C: 425.471.9324

From: DLane@bellevuewa.gov [mailto:DLane@bellevuewa.gov]
Sent: Thursday, October 26, 2017 10:27 AM
To: Kenny Gomez <kgomez@rh2.com>
Cc: TKomada@bellevuewa.gov
Subject: Kirkland General Sewer Plan Comments

Hi Kenny:

Here are my comments on Kirkland's General Sewer Plan. Sorry this is so late – I was out on vacation. I'm copying Tatsu Komada in case he might have any other comments.

- Page ES-7: The sewered area and the calculation of gpad for Yarrow Bay basin in Table ES-7 might need to include upstream areas in Bellevue (Basin 6), if the meter used to estimate I&I is located downstream at King County's pump station. (Disregard if meter was upstream of joint-use pipe and only measured Kirkland flows.) Our Basin 6 polygon in GIS is 586 acres; it's sewered generally but includes 90+ acres of I-405 and SR-520 ROW (I would estimate 490 sewered acres, though it depends on how/what you count).
    - The peak hour I/I for the Bellevue portion of Yarrow Bay is shown in Table ES-8 along with the other peak hour I/I values. It was not shown in Table ES-7 since this information was derived from Bellevue's WW System Plan.
- My understanding is there was some history of surcharges or backups along Lake Washington Blvd related to lack of capacity at King County's Yarrow Bay Lift Station. Should that be mentioned? Disregard if it is already.
    - I will dig into this further to confirm the surcharges at King County's Yarrow Bay Lift Station when we receive the County's comments. This surcharge is not mentioned at this time. However, the sewer mains upstream of the lift stations were identified as having insufficient capacity for peak hour flow at this time.
- Page 4-11: We had a proposal to re-develop a church with multi-family housing in Basin 6 (will flow to Yarrow Bay Pump Station. We estimate an increase of roughly 20 gpm to peak flow going into Kirkland at the Points Drive intertie west of Bellevue Way/ Lake WA Blvd. I doubt Bellevue's Planning Department assumed this site would redevelop like that, so I would add that above and beyond the future projections of 380 (2021) and 400 (2036).

- My understanding is the developer is not continuing to pursue this development which was why it was not included in the projections. In addition, the projections can be reevaluated when the improvements projects are being designed.

Thanks

Douglas Lane, PE
Water & Sewer Systems Senior Engineer
City of Bellevue
(425)452-6865
dlane@bellevuewa.gov

"The contents of this electronic mail message do not necessarily reflect the official views of the elected officials or citizens of the City of Bellevue."

Kenny Gomez

From: Hirschey, Steve <Steve.Hirschey@kingcounty.gov>
Sent: Friday, December 01, 2017 2:19 PM
To: Kenny Gomez
Subject: Administrative Appeal Process Must Now Be Offered for Required Septic-to-Sewer Conversions

Ken – here is a follow-up to my our brief conversation just now. This maybe an issue the City wants to proactively address with some language/policy in the wastewater plan. This is not a county issue, given the City does not serve in unincorporated areas (at least as far as I can tell). Steve

http://mrsc.org/Home/Stay-Informed/MRSC-Insight/September-2015/Administrative-Appeal-Process-Must-Now-Be-Offered.aspx

Steve Hirschey
King County Utilities Technical Review Committee
206.477.5387

MRSC
Local Government Success

Administrative Appeal Process Must Now Be Offered for Required Septic-to-Sewer Conversions

September 8, 2015 by John W. Carpita, PE
Category: Utilities

After several years in the making, the legislature passed a new law, ESB 5871, governing septic-to-sewer conversions, which AWC calls a "middle ground" between the needs of local governments and property owners. Effective July 24, 2015, cities, towns, and counties are now required to offer an administrative appeals process when septic repair or replacement of existing single family systems is denied by the local health department and sewer hookup is required. What is unusual about this new law is that it requires one type of local jurisdiction - a city, town, or county - to hear appeals from decisions made by another type of local jurisdiction - a local health department of health district.

On-site septic systems, or on-site sewage systems, are the most common method of wastewater treatment for homes, commercial establishments, and other places that are not connected to a public sanitary sewer system. An on-site sewage system consists of a network of pipes, a septic tank, and a drain field, and provides subsurface soil treatment and dispersal of sewage.

Many cities, towns, and counties have an ordinance or resolution requiring connection to a public sewer system upon the failure of an on-site septic system. The septic installers association argued that these regulations sometimes forced unfair financial burdens onto homeowners due to the cost of hooking up to sewer systems. This new law gives single-family homeowners an outlet for appeal when a request to repair or replace their existing on-site system is denied solely because of a local law, regulation, or ordinance requiring connection to a public sewer system. Local jurisdictions may use existing administrative appeals processes if the legislative body of the local jurisdiction or an administrative hearings officer presides over that process.

The administrative appeals process must, at a minimum, consider:

- Whether it is cost-prohibitive to require the owner to connect to the public sewer system.

- The public health or environmental impacts from allowing the replacement or repair of the septic system, particularly on surface water and groundwater.
- The impacts on public sewer system performance or financing from the replacement or repair of the septic system.
- If there are financial assistance programs or latecomer agreements available to the owner by the town, city, county, or state.

If, after the appeals process, the jurisdiction determines that the owner still must connect to the public sewer system, the owner may, in complying with the determination and subject to approval of appropriate permits, select and hire contractors to perform the necessary work to connect to the public sewer system at the owner's expense. Unless otherwise required by law, a determination by a local jurisdiction on this issue is not subject to further appeal.

About John W. Carpita, PE

Public Works Consultant John is MRSC's resource for engineering design, purchasing and bidding issues, contract document preparation, construction contract issues, local improvement districts, sewer, water, storm drainage and solid waste issues, as well as resource conservation. He's a registered professional engineer and has had a widely varied 42-year career as a consultant, county engineer, city engineer and project manager.
VIEW ALL POSTS BY JOHN W. CARPITA, PE

Comments

0 comments on Administrative Appeal Process Must Now Be Offered for Required Septic-to-Sewer Conversions

Blog post currently doesn't have any comments.

© 2015 MRSC of Washington. All rights reserved. Privacy & Terms.

Kenny Gomez

From: Hirschey, Steve <Steve.Hirschey@kingcounty.gov>
Sent: Friday, December 15, 2017 4:21 PM
To: Kenny Gomez
Cc: DLane@bellevuewa.gov
Subject: RE: Kirkland General Sewer Plan Comments

Hi Kenny – in response to your email/Doug's comment, I offer the following:

The surcharge and backup at the Yarrow Bay pump station has been related to power reliability issues. The pump station has dual feed from PSE but both feeds have failed in the past leading to backups and surcharging. We have an emergency generator onsite now to address power reliability.

Secondly, the Wastewater Treatment Division recently assessed the three raw sewage pumps at Yarrow Bay Pump Station. One result of that assessment is that the pumps will be replaced in order to improve operations performance at the station. The pump station and force main are also identified in WTD's Conveyance System Improvement Plan for a full upgrade including capacity improvements. That project is expected to be initiated in the next 4-8 years. Thanks.

Steve Hirschey
King County Utilities Technical Review Committee
206.477.5387

From: Kenny Gomez [mailto:kgomez@rh2.com]
Sent: Thursday, December 14, 2017 4:54 PM
To: Hirschey, Steve
Subject: FW: Kirkland General Sewer Plan Comments

Hi Steve,

I am working with the City of Kirkland to address the review comments by the County and adjacent purveyors regarding the City's General Sewer Plan.

I am hoping you could provide some information regarding one of the review comments received from the City of Bellevue.

One review comment by the City of Bellevue (also highlighted below) is there is a lack of capacity at King County's Yarrow Bay Lift Station that is partially responsible for surcharges or backups along Lake Washington Blvd.

Can you please verify if there is currently a lack of capacity at King County's Yarrow Bay Lift Station?

Please call if there are any questions.

Thank you,
Kenny Gomez, PE
P: 425.951.5416
C: 425.471.9324

From: DLane@bellevuewa.gov [mailto:DLane@bellevuewa.gov]
Sent: Thursday, October 26, 2017 10:27 AM
To: Kenny Gomez <kgomez@rh2.com>
Cc: TKomada@bellevuewa.gov
Subject: Kirkland General Sewer Plan Comments

Hi Kenny:

Here are my comments on Kirkland's General Sewer Plan. Sorry this is so late – I was out on vacation. I'm copying Tatsu Komada in case he might have any other comments.

- Page ES-7: The sewered area and the calculation of gpad for Yarrow Bay basin in Table ES-7 might need to include upstream areas in Bellevue (Basin 6), if the meter used to estimate I&I is located downstream at King County's pump station. (Disregard if meter was upstream of joint-use pipe and only measured Kirkland flows.) Our Basin 6 polygon in GIS is 586 acres; it's sewered generally but includes 90+ acres of I-405 and SR-520 ROW (I would estimate 490 sewered acres, though it depends on how/what you count).
- My understanding is there was some history of surcharges or backups along Lake Washington Blvd related to lack of capacity at King County's Yarrow Bay Lift Station. Should that be mentioned? Disregard if it is already.
- Page 4-11: We had a proposal to re-develop a church with multi-family housing in Basin 6 (will flow to Yarrow Bay Pump Station. We estimate an increase of roughly 20 gpm to peak flow going into Kirkland at the Points Drive intertie west of Bellevue Way/ Lake WA Blvd. I doubt Bellevue's Planning Department assumed this site would redevelop like that, so I would add that above and beyond the future projections of 380 (2021) and 400 (2036).

Thanks

Douglas Lane, PE
Water & Sewer Systems Senior Engineer
City of Bellevue
(425)452-6865
dlane@bellevuewa.gov

"The contents of this electronic mail message do not necessarily reflect the official views of the elected officials or citizens of the City of Bellevue."

King County

Utilities Technical Review Committee
Department of Natural Resources and Parks
King Street Center
201 South Jackson Street, Suite 503
Seattle, WA 98104-3855
www.kingcounty.gov

RECEIVED BOTHELL
RH2 ENGINEERING INC.
JOB NO:
DEC 23 2017
ROUTE TO: KG
FILE:

December 19, 2017

Mr. Josh Pantzke
City of Kirkland
915 8th Street
Kirkland WA 98033

Dear Mr. Pantzke;

The City of Kirkland (City) submitted a City of Kirkland General Sewer Plan, August 2017 Agency Review Draft (Plan) in September of 2017 to King County. This letter is a review of the Plan pursuant to King County Code (K.C.C.) 28.84. The criteria for review are listed in K.C.C. 28.84.050(D)(3) and include the review of design and construction standards and standard specifications, review of ordinances and resolutions, and that comprehensive sewer plans are prepared and approved subject to the requirements defined in K.C.C. 13.24, and by reference, chapter 173-240 Washington Administrative Code (WAC).

In reviewing the draft Plan, the Utilities Technical Review Committee (UTRC) found that it is largely consistent with the County's comprehensive plan and code. Following is a list of the additional information necessary before we can make a recommendation for approval of the City's final Plan. We request the final Plan include:

1. Updated reference to the current King County Comprehensive Plan last updated in December 2016;

2. A list of all establishments producing industrial wastewater, the quantity of wastewater and periods of production, and the character of the industrial wastewater insofar as it may affect the sewer system or treatment plant. Consideration should be given to future industrial expansion, if any. Attached is a list of the known Industrial Waste Discharge permits for establishments within the City that King County has on record;

3. A description of opportunities for reclaimed water use as required under RCW 90.48.112. To facilitate the assessment, the Washington State Department of Ecology has published guidance material on their website, or alternatively, the King County Reclaimed Water Checklist is available online here: http://www.kingcounty.gov/~/media/environment/dnrp/documents/WaterReclamationChecklist12_2011.ashx?la=en

4. Provide an evaluation of the impact of future water conservation efforts on wastewater flows;

5. Provide a final, dated and signed State Environmental Policy Act checklist and determination for this action; and

6. The resolution adopting the final Plan by the City.

Our review of the design and construction standards, standard specifications, ordinances and resolutions from the City raised no issues of concern.

King County is pleased to see the draft plan acknowledges Inflow and Infiltration (I/I) as a problem for sewer collection systems and the City is proposing an I/I study.

King County, along with the cities and sewer districts that deliver wastewater to the regional system, is evaluating concepts for I/I reduction. Sewer and side sewer standards, inspection practices, and private side sewer programs are specific types of concepts that are being explored. King County appreciates the City of Kirkland's involvement in this process. Some results are currently available. Recommendations from the evaluation are expected in 2018. The City's General Sewer Plan is one opportunity to position your ongoing work directly to the I/I evaluation results and recommendations.

The General Sewer Plan proposes an I/I Study in the future to identify areas of its system with significant I/I and cost-effective improvements that could be implemented to reduce I/I in the City sewer system. When developing the specific scope for the study, we would encourage you to include a private side sewer component that may:

- use specific recommendations from the regional I/I effort;
- expand the information available on the status of I/I in private side sewers through video inspections, flow monitoring or other approaches; and
- develop an ongoing private side sewer program.

The General Sewer Plan describes several sewer main replacement projects as part of the City's capital improvement plan. As part of the regional I/I effort, it was found that some cities and sewer districts use sewer main replacements as an opportunity to also replace private side sewers

and as part of a private side sewer program. Due to the high I/I flow rates in portions of the City's sewer system, we would encourage the City to consider such tools to reduce I/I.

Other opportunities to integrate future 2017/2018 regional I/I recommendations include updates to I/I and side sewer policies, standards, and design criteria, and updates to ongoing programs such as staff training programs, inspection programs and /I reduction programs.

For further information on the I/I program results and recommendations, please contact Steve Tolzman with the King County Wastewater Treatment Division, at 206.477.5459 or steve.tolzman@kingcounty.gov.

The City submitted the Plan to the Washington State Department of Ecology (Ecology) for its review and approval. We would like to see the City's responses to Ecology's comments as well as the comments and responses to comments provided by any other entities.

The Director of the Department of Natural Resources will make the approval decision on the City's Plan given the City is a component agency of the regional system with no sewer service in unincorporated King County. The Director's final action on the Plan will constitute King County's approval of the Plan.

If you have any questions or concerns on information or findings in the letter, please do not hesitate to call me at 206-477-5387, or my colleague, Mark Lampard, in our Wastewater Treatment Division, at 206-477-5414.

Sincerely,

Stephen Hirschey
Chair, Utilities Technical Review Committee

cc Mr. Shawn McKone, Water Quality Program, Washington State Department of Ecology
Mr. Kenny Gomez, RH2 Engineering, Inc.

Enclosure

Name	Investigator		Customer Type	Address			Permit #	Effective Date	Expiration	Permit Type
84th Rose Terrace LLC Construction Project	DESPINA STRONG	CITY OF KIRKLAND	CONSTRUCTION DEWATERING	12802 NE 84TH STREET	KIRKLAND	98003	40055-01	24-Oct-16	23-Oct-18	GLA-CONSTRUCTION
Absolute GM LLC	TODD GOWING	CITY OF KIRKLAND	GENERAL TYPE	11809 NE 116TH STREET	KIRKLAND	98034	400314-01	27-Jun-16		NO CONTROL DOCUMENT REQUIRED
AquaTactics LLC (fka Aqua Life Veterinary Services LLC)	PEGGY RICE	NORTHSHORE UTILITY DISTRIC	LABORATORY	12015 115TH AVENUE NE, SUITE 120	KIRKLAND	98034	400292-01	7-Mar-16		NO CONTROL DOCUMENT REQUIRED
Astronics AES Corp.	DAVE HABERMAN	CITY OF KIRKLAND	MANUFACTURING-MISC	12950 WILLOWS ROAD NE	KIRKLAND	98034	400160-01	14-Aug-14		NO CONTROL DOCUMENT REQUIRED
Big Mountain Enterprises - Hultquist Homes - Ridge at Finn Hill	LYDIA ENG	NORTHSHORE UTILITY DISTRIC	CONSTRUCTION DEWATERING	NE 145TH STREET AND 81ST AVENUE N	KIRKLAND	98034	11782-01	3-Aug-17	3-Nov-17	LETTER OF AUTHORIZATION
DTSJ Holdings, LLC - Chick-fil-A Construction Project	DESPINA STRONG	CITY OF KIRKLAND	CONSTRUCTION DEWATERING	12026 NE 124TH STREET	KIRKLAND	98034	40091-01	2-Feb-17	1-Feb-19	GLA-CONSTRUCTION
Dibble Engineers - Market Street Construction Project	RYAN SALEM	CITY OF KIRKLAND	CONSTRUCTION DEWATERING	1029 MARKET STREET	KIRKLAND	98033	11778-01	17-Jul-17	16-Jul-19	LETTER OF AUTHORIZATION
Dynamic Harvest	PEGGY RICE	CITY OF KIRKLAND	Cannabis Grower	13513 NE 126TH PLACE, SUITE B	KIRKLAND	98034	400304-01	11-May-16		NO CONTROL DOCUMENT REQUIRED
East West Quality Home LLC Construction Project	DESPINA STRONG	NORTHSHORE UTILITY DISTRIC	CONSTRUCTION DEWATERING	11610 80TH AVENUE NE	KIRKLAND	98033	40066-01	8-Nov-16	7-Nov-18	GLA-CONSTRUCTION
Eastside Preparatory School - Schuchart Corporation - TALI Hal	DESPINA STRONG	CITY OF KIRKLAND	CONSTRUCTION DEWATERING	10613 NE 38TH PLACE	KIRKLAND	98033	40114-01	31-Jul-17	30-Jul-19	GLA-CONSTRUCTION
Eastside Subaru - Kirkland Automotive Holdings	PEGGY RICE	CITY OF KIRKLAND	Wash Pad	11803 NORTHEAST 116TH STREET	KIRKLAND	98034	400342-01	10-Nov-16		NO CONTROL DOCUMENT REQUIRED
Evergreen Health	LYDIA ENG	NORTHSHORE UTILITY DISTRIC	HOSPITAL	12040 NE 128TH STREET	KIRKLAND	98034	703-04	2-Aug-17	1-Aug-22	MINOR DISCHARGE AUTHORIZATION
Float Rubicon	PEGGY RICE	CITY OF KIRKLAND	GENERAL TYPE	9715 NE 119TH WAY	KIRKLAND	98034	101152-01	10-Mar-17		NO CONTROL DOCUMENT REQUIRED
Fractal LLC	RYAN SALEM	CITY OF KIRKLAND	GENERAL TYPE	13625 NE 126TH PLACE, SUITE 400	KIRKLAND	98034	400299-01	6-Apr-16		NO CONTROL DOCUMENT REQUIRED
Havlik's Radiator Service Inc.	RYAN SALEM	CITY OF KIRKLAND	RADIATOR REPAIR	11851 124TH AVENUE NE	KIRKLAND	98034	11699-01	1-Jun-16	31-May-21	LETTER OF AUTHORIZATION
Hy Kitchen Cabinet & Stone Inc.	DAVE HABERMAN	CITY OF KIRKLAND	GENERAL TYPE	11251 120TH AVENUE NE, SUITE 146	KIRKLAND	98033	400049-01	3-Jul-13		NO CONTROL DOCUMENT REQUIRED
King County SWD - Houghton Transfer Station	RYAN SALEM	CITY OF KIRKLAND	SOLID WASTE - TRANSFER FAC	11724 NE 60TH STREET	KIRKLAND	98033	4423-01	1-Aug-17	31-Jul-22	MAJOR DISCHARGE AUTHORIZATION
Kirkland Main Street, LP - Park Lane Mixed-Use Apartments Co	DESPINA STRONG	CITY OF KIRKLAND	CONSTRUCTION DEWATERING	207 PARK LANE	KIRKLAND	98033	40032-01	29-Jul-16	28-Jul-18	GLA-CONSTRUCTION
Kirkland, City of - Lake Washington Blvd. Crossing Enhancemer	DESPINA STRONG	CITY OF KIRKLAND	CONSTRUCTION DEWATERING	3781 LAKE WASHINGTON BLVD	KIRKLAND	98033	40016-01	15-Apr-16	14-Apr-18	GLA-CONSTRUCTION
Kirkland, City of - Storm/Sewer Decant Station	TODD GOWING	CITY OF KIRKLAND	DECANT STATION	904 8TH STREET	KIRKLAND	98033-618	4131-03	28-Aug-17	27-Aug-22	MAJOR DISCHARGE AUTHORIZATION
Maelstrom Brewing LLC	RYAN SALEM	CITY OF KIRKLAND	FOOD PROCESSING-BREWERY	11014 120TH AVENUE NE	KIRKLAND	98033	400378-01	25-Jul-17		NO CONTROL DOCUMENT REQUIRED
Overlake Oil Inc.	LYDIA ENG	CITY OF KIRKLAND	FUELING FACILITY	1021 EIGHTH ST.	KIRKLAND	98033	400315-01	12-Jul-16		NO CONTROL DOCUMENT REQUIRED
PPN Ventures LP - Cubes Self Storage	DESPINA STRONG	CITY OF KIRKLAND	CONSTRUCTION DEWATERING	615 SEVENTH AVENUE	KIRKLAND	98033	40056-01	25-Oct-16	24-Oct-18	GLA-CONSTRUCTION
Pillar Properties - 11 Main Street South Footing Drains	PEGGY RICE	NORTHSHORE UTILITY DISTRIC	GROUNDWATER REMEDIATION -	11 MAIN STREET SOUTH	KIRKLAND	98033	4414-01	20-Mar-17	19-Mar-22	MAJOR DISCHARGE AUTHORIZATION
Puget Sound Developers Services	DANA HEINZ	CITY OF KIRKLAND	GENERAL TYPE	733 126TH AVENUE NE	KIRKLAND	98033	400045-01	28-May-13		NO CONTROL DOCUMENT REQUIRED
Quality Finishing	DANA HEINZ	NORTHSHORE UTILITY DISTRIC	METAL FINISHING - CFR 433	12704 NE 124TH STREET, SUITE 42	KIRKLAND	98034	9708-02	5-Feb-15	4-Feb-20	ZERO DISCHARGE (CATEGORICAL)
Silicon Designs Inc. - Kirkland	RYAN SALEM	NORTHSHORE UTILITY DISTRIC	ELECTRONIC COMPONENTS - CFR	13905 NE 128TH STREET	KIRKLAND	98034	7914-01	15-Apr-15	30-Jun-18	PERMIT
Toll Brothers Inc. - Kirkland Compound Construction Project	RYAN SALEM	CITY OF KIRKLAND	CONSTRUCTION DEWATERING	11808 NE 70TH STREET	KIRKLAND	98033	11732-01	15-Nov-16	14-Nov-18	LETTER OF AUTHORIZATION
Village at Totem Lake - Bldg. D	GREG NEWBORN	NORTHSHORE UTILITY DISTRIC	GENERAL TYPE	12632 TOTEM LAKE BLVD	KIRKLAND	98034	400385-01	20-Sep-17		NO CONTROL DOCUMENT REQUIRED
Village at Totem Lake, LLC	GREG NEWBORN	NORTHSHORE UTILITY DISTRIC	GENERAL TYPE	12660 TOTEM LAKE BLVD	KIRKLAND	98034	400334-01	21-Sep-16		NO CONTROL DOCUMENT REQUIRED
Western Pneumatic Tube Company LLC	DAVE HABERMAN	CITY OF KIRKLAND	METAL FINISHING - CFR 433	835 SIXTH STREET S.	KIRKLAND	98033	7604-05	31-Dec-15	30-Dec-20	PERMIT
Windward Wendy LLC Construction Project	DESPINA STRONG	CITY OF KIRKLAND	CONSTRUCTION DEWATERING	301 FOURTH AVENUE	KIRKLAND	98033	40131-01	1-Oct-17	30-Sep-19	GLA-CONSTRUCTION

Stephanie Perkins

From: Joshua Pantzke <JPantzke@kirklandwa.gov>
Sent: January 3, 2018 2:21 PM
To: Kenny Gomez
Subject: FW: Reclaimed Water Feasibility Study - Data Request

We could include the information collected from the request below to address KC's comment #3 in their review letter.

Josh Pantzke
Utility Manager
City of Kirkland, Department of Public Works
Maintenance Center
P: 425-587-3917 C: 425-559-3131 E: jpantzke@kirklandwa.gov

From: Paula Anderson [mailto:panderson@cascadewater.org]
Sent: Tuesday, December 19, 2017 11:41 AM
To: Kathy Brown; Joshua Pantzke; Kyle Butler; Sarah Ogier; mchaw@bellevuewa.gov; Scott Thomasson; Linda E. De Boldt
Cc: Ed Cebron; Ray Hoffman; Chuck Clarke; jeff.hansen@hdrinc.om; jacque.klug@kingcounty.gov
Subject: Reclaimed Water Feasibility Study - Data Request

Cascade is partnered with King County and Woodinville WD to evaluate reclaimed water feasibility in and near the Sammamish Valley Corridor. We have vaguely defined a service area consisting of areas north of 520, east of 132nd Avenue, and west of the Bear Creek valley. The study will further define this.

The consultant is now starting, and has requested the following information from the retail water utilities: Bellevue, Kirkland, Redmond (and Woodinville). We would appreciate your timely response and assistance on providing this data.

1. List of 20 largest water customer accounts for 2016 (based on total annual consumption). [Note: This should be for the largest individual metered locations. E.g., a specific school, not the entire school district as a customer.] In addition, for each of these accounts:
    a. Monthly or bimonthly billing data (consumption) for each customer, for 2014-2016 (to the extent available).
    b. Location of each (address or mapped location).
2. If the utility has a separate irrigation customer class and the highest 10 irrigation accounts for 2016 are not all included in the above "top 20" list, provide the list of additional top irrigation accounts so that in total the largest 10 irrigation accounts are captured. (I.e., the point is to identify the top 10 irrigation accounts, even if they don't all fall within the overall top 20 customer account list in #1.)
    a. Monthly or bimonthly billing data for these accounts.
    b. Location of each.
3. GIS layers depicting current zoning and land use (as applicable to future growth/development).
4. GIS layers for wellhead protection areas (I believe this really only applies to Redmond, unless Bellevue has prepared WHPP areas for any emergency wells).
5. Contacts at each City/utility that HDR can reach out to discuss future development/growth patterns.

Please send the information directly to Jeff Hansen at HDR (email info below) and CC me and Ed Cebron at Cascade.

Thank you!
Paula Anderson

Cascade Water Alliance

Jeff Hansen, PE
D 360.570.4410 **M** 360.970.9752

Jeff.hansen@hdrinc.com

NOTICE: This e-mail account is part of the public domain. Any correspondence and attachments, including personal information, sent to and from the City of Kirkland are subject to the Washington State Public Records Act, Chapter 42.56 RCW, and may be subject to disclosure to a third party requestor, regardless of any claim of confidentiality or privilege asserted by an external party.

Stephanie Perkins

From: Joshua Pantzke <JPantzke@kirklandwa.gov>
Sent: January 3, 2018 2:24 PM
To: Kenny Gomez
Subject: FW: Reclaimed Water Feasibility Study - Data Request
Attachments: Top 25 Consumption Top 10 Irrigation 2016.xls

Data attached.

Josh Pantzke
Utility Manager
City of Kirkland, Department of Public Works
Maintenance Center
P: 425-587-3917 C: 425-559-3131 E: jpantzke@kirklandwa.gov

From: Jay Gewin
Sent: Wednesday, December 27, 2017 5:04 PM
To: Joshua Pantzke
Subject: RE: Reclaimed Water Feasibility Study - Data Request

Hi Josh,

How does this look?

Jay Gewin
Customer Accounts Supervisor
City of Kirkland
425-587-3144

From: Joshua Pantzke
Sent: Tuesday, December 26, 2017 10:44 AM
To: Jay Gewin <jgewin@kirklandwa.gov>
Subject: FW: Reclaimed Water Feasibility Study - Data Request

Jay,

Can you gather the information highlighted in yellow below for me, please? An excel spreadsheet would be great but whatever is easiest, they don't specify the format. Would you be able to complete this in the next week?

Thank you

Josh

Josh Pantzke
Utility Manager
City of Kirkland, Department of Public Works
Maintenance Center
P: 425-587-3917 C: 425-559-3131 E: jpantzke@kirklandwa.gov

From: Paula Anderson [mailto:panderson@cascadewater.org]
Sent: Tuesday, December 19, 2017 11:41 AM
To: Kathy Brown; Joshua Pantzke; Kyle Butler; Sarah Ogier; mchaw@bellevuewa.gov; Scott Thomasson; Linda E. De Boldt
Cc: Ed Cebron; Ray Hoffman; Chuck Clarke; jeff.hansen@hdrinc.om; jacque.klug@kingcounty.gov
Subject: Reclaimed Water Feasibility Study - Data Request

Cascade is partnered with King County and Woodinville WD to evaluate reclaimed water feasibility in and near the Sammamish Valley Corridor. We have vaguely defined a service area consisting of areas north of 520, east of 132nd Avenue, and west of the Bear Creek valley. The study will further define this.

The consultant is now starting, and has requested the following information from the retail water utilities: Bellevue, Kirkland, Redmond (and Woodinville). We would appreciate your timely response and assistance on providing this data.

1. List of 20 largest water customer accounts for 2016 (based on total annual consumption). [Note: This should be for the largest individual metered locations. E.g., a specific school, not the entire school district as a customer.] In addition, for each of these accounts:
    a. Monthly or bimonthly billing data (consumption) for each customer, for 2014-2016 (to the extent available).
    b. Location of each (address or mapped location).
2. If the utility has a separate irrigation customer class and the highest 10 irrigation accounts for 2016 are not all included in the above "top 20" list, provide the list of additional top irrigation accounts so that in total the largest 10 irrigation accounts are captured. (I.e., the point is to identify the top 10 irrigation accounts, even if they don't all fall within the overall top 20 customer account list in #1.)
    a. Monthly or bimonthly billing data for these accounts.
    b. Location of each.
3. GIS layers depicting current zoning and land use (as applicable to future growth/development).
4. GIS layers for wellhead protection areas (I believe this really only applies to Redmond, unless Bellevue has prepared WHPP areas for any emergency wells).
5. Contacts at each City/utility that HDR can reach out to discuss future development/growth patterns.

Please send the information directly to Jeff Hansen at HDR (email info below) and CC me and Ed Cebron at Cascade.

Thank you!
Paula Anderson
Cascade Water Alliance

Jeff Hansen, PE
D 360.570.4410 **M** 360.970.9752

Jeff.hansen@hdrinc.com

NOTICE: This e-mail account is part of the public domain. Any correspondence and attachments, including personal information, sent to and from the City of Kirkland are subject to the Washington State Public Records Act, Chapter 42.56 RCW, and may be subject to disclosure to a third party requestor, regardless of any claim of confidentiality or privilege asserted by an external party.

Utility Billing

Top Users Report

User: aremon
Display Top: 10
Print By: CYCLE
Sort By: CONSUMPTION
Service: 1
Billing Cycle: (All)
Date Range: 01/01/16 - 12/31/16

Account No	Name	Service Address	Rate	Consumption	
30664	LAKE WASHINGTON SCHOOL DISTRICT (II	12033 NE 80TH ST	RHI	6,837.00	IRR COM
25813	LMJ ENTERPRISES	11845 NE 85TH ST	RHI	3,801.00	IRR COM
12930	NORTHWEST UNIVERSITY	11220 NE 53RD ST	WSM	3,091.00	IRR COM
6148	CITY OF KIRKLAND-PARKS MNTC	202 3RD ST	WSM	3,038.00	IRR COM
23940	LINBROOK BLDGS LLC	10520 NE 38TH PL	WSM	2,948.00	IRR COM
50045	GSIC FORBES CREEK REIT INC APT (SP	10815 115TH CT NE	IRRmtf	2,941.00	IRR MTF
8429	CITY OF KIRKLAND PARKS MAINT	1818 6TH ST	WSM	2,804.00	IRR COM
5912	CITY OF KIRKLAND PARKS MAINT	202 3RD ST	WSM	2,651.00	IRR COM
50052	GSIC FORBES CREEK REIT INC APTS	10919 113TH CT NE	IRRmtf	2,608.00	IRR MTF
2818	CITY OF KIRKLAND PARKS MAINT	500 8TH ST S	WSM	2,440.00	IRR COM

Stephanie Perkins

From: McKone, Shawn (ECY) <SHMC461@ECY.WA.GOV>
Sent: July 31, 2018 10:24 AM
To: KBrown@kirklandwa.gov
Cc: Joshua Pantzke; Kenny Gomez; Hirschey, Steve
Subject: City of Kirkland Draft General Sewer Plan
Attachments: Kirkland 2018 Sewer Comp Plan - Ecology Review.xlsx

Ms. Brown,

On May 10, 2018, RH2 Engineers submitted a draft general sewer plan on the City of Kirkland's behalf for Ecology's review. We have completed our review and are providing the attached comments. Please make necessary revisions to the plan prior to submitting the final version for approval.

I am happy to meet with you or your staff and consultants at any time to discuss the comments. Please don't hesitate to let me know if any additional information is needed.

Best regards,
Shawn

Shawn McKone, P.E.
Municipal Facility Manager
Washington Department of Ecology |NWRO, Water Quality Program |3190 160th Ave. SE | Bellevue, WA 98008-5452
(425) 649-7037 | shawn.mckone@ecy.wa.gov

City of Kirkland General Sewer Plan - Review Comment/Response Form

Review Phase: Draft
Contact: Kenny Gomez, PE, RH2 Engineering

Reviewed By: Shawn McKone, PE
Comment Date: **7/31/2018**

No.	Dwg. Sheet No. / Spec. & Page No.	Sector / Paragraph No.	Comment	Reviewer last name	Response	Responder	Reviewer Check Off	Implementation Date	Implementation Initials
1	Page 2-4	Lift Stations	The lift station general description states that the city performed drawdown tests at each lift station. Please provide more detail on how tests were conducted. In particular, please verify that testing was done on each individual pump to determine their individual capacities.	McKone	**New Text -** The City performed additional drawdown tests in 2018. Tests were performed on each pump individually and with two pumps in operation at the lift station. The measurements and results from these tests can be found in Appendix E. Tables 2-2 and 4-9 and corresponding text were updated with the new lift station pump capacities.	*City (Pantzke), and RH2 (Gomez)*			
2	Page 2-4	Lift Stations, Table 2-2	The table shows that the pump capacities for the Yarrow Bay II and Waverly Park lift stations are substantially lower than the rated design capacities. Has any investigation been done to determine why actual capacity is lower than design? Please discuss any known factors that contribute to actual flow rates being lower than the design capacity.	McKone	See response to Comment No. 1. **New Text -** As shown in Table 2-2, the drawdown pump tests performed by the City at this lift station indicate the current capacity of each pump is less than the design capacity. The lower pumping rates have not been investigated by the City yet. The lower pumping rates could be due to a number of reasons including, but not limited to, the difference in the pump intake and discharge elevations constructed being greater than what was designed, pump impellors becoming worn, or a restriction or buildup of material in the force main. The City will continue to monitor these pumps and may further investigate this manner if it develops into an issue for this lift station.	*City (Pantzke), and RH2 (Gomez)*			
3	Page 2-4	Lift Stations, Table 2-2	The table shows that the Lake Plaza lift station has a design and draw down test capacity of 750 gpm and a firm capacity of 1,300 gpm. Ecology assumes the firm capacity for this station is with two of the station's three pumps in operation. If so, shouldn't the firm capacity be 1,500 gpm (2x750)? If there are factors that reduce the station's overall capacity with two pumps operating in tandem, please discuss them in the narrative for the station on page 2-6.	McKone	See response to Comment No. 1. **New Text -** The drawdown pump tests performed by the City at Lake Plaza Lift Station indicate each pump running individually has a capacity of 801 gpm and the firm capacity of this lift station with two pumps in operation is 1,157 gpm, as provided in Table 2-2. The capacity of this lift station with two pumps in operation is not twice of what it is with one pump in operation because all three of the lift station pumps discharge through the same force main and the friction losses in this force main increase exponentially as the flow rate increases with two pumps in operation.	*City (Pantzke), and RH2 (Gomez)*			

No.	Dwg. Sheet No. / Spec. & Page No.	Sector / Paragraph No.	Comment	Reviewer last name	Response	Responder	Reviewer Check Off	Implementation	
								Date	Initials
4	Page 2-5	Rose Point Lift Station	The text notes that the Rose Point Lift Station has a constructed overflow to Lake Washington. Please provide more detail about this overflow, including a more exact description of the discharge location and a summary of past discharges from the station. Any overflows from this lift station would be considered an unpermitted discharge to waters of the state. Were all past discharges reported to Ecology? The text also notes that "a replacement...is currently being designed and is anticipated to be constructed in 2017". Ecology does not have a record of reviewing or approving engineering documents for this replacement. WAC 173-240-030(5) specifically requires Ecology review and approval for any lift station that includes constructed overflows or bypasses. Please discuss the status of design/construction of the new lift station. Also discuss how the City plans to comply with the document submittal requirement cited above and describe how the proposed design will eliminate the unpermitted discharge (or potential to discharge) to Lake Washington.	McKone	**New Text -** The station's overflow system discharges to Lake Washington by Kiwanis Park near the water surface level. The overflow pipe was plugged with a mechanical plug from within the lift station wetwell in July 2018. The City has no known history of overflows occurring at Rose Point Lift Station in the last decade. **New Text -** A replacement for the Rose Point Lift Station is currently being designed, which is 90 percent complete, and is anticipated to have construction completed in 2019. The proposed lift station includes decommission of the station's overflow system. **New Text -** The existing wetwell will be utilized as emergency offline storage for the proposed lift station.	*City (Pantzke)*			
5	Page 2-7	Wastewater Treatment and Disposal Facilities	Please include relevant detail for the service agreement with King County DNRP that impact the flow of wastewater to their system for treatment. Details may include committed capacity at the South plant for the City, any regulation of flow rates into the East Interceptor or other DNRP facilities, and any other requirements that limit or regulate the City's ability to send sewage flow to DNRP.	McKone	**New Text -** The City's current agreement with the County (Appendix B) does not include any details regarding committed capacity for the City or regulation of flow rates discharged by the City. The City last renewed its agreement in 2014. However, the County is in process of updating its service agreements with its wholesale sewer customers. The City anticipates it will likely renew its service agreement with the County during the County's current effort to renew contracts.	*City (Pantzke)*			
6	Page 2-7	Telemetry and Supervisory Control	Please include a brief discussion regarding network security for the SCADA system. While it is not necessary to include any information that may compromise the integrity of the system's security, the plan should include a general discussion about practices and protocols in place to prevent malicious access.	McKone	**New Text -** The City is in process of implementing a SCADA hardware and software replacement program. As part of process, The City's data backup protocol has been updated. The City now has a dedicated off-site server, which is used to store the backup data. Only a secured VPN connection is used to access the City's SCADA system remotely.	*City (Pantzke)*			
7	Page 2-8	Industrial Wastewater Facilities/ Characterization	It is unclear why Western Pneumatic is specifically called out in this text. The county-issued pretreatment permit for this facility is included in Appendix H and it is included in the facilities list in that appendix. The Industrial Stormwater Permit cited in the text is not necessarily relevant to the "general sewer plan" unless that stormwater flow ends up in the sewage collection system. Please clarify.	McKone	References to the Industrial Stormwater Permit and Western Pneumatic were removed from the Chapter.	*RH2 (Gomez)*			

No.	Dwg. Sheet No. / Spec. & Page No.	Sector / Paragraph No.	Comment	Reviewer last name	Response	Responder	Reviewer Check Off	Implementation	
								Date	Initials
8	Page 2-9	Northshore Utility District	The text states that "the City and Northshore were working on a mutual agreement to have Northshore assume ownership of the NE 124th Street sewer drainage basin". Please identify the basin(s) impacted by this transfer using basin numbers shown in figure 2-4. Also, please highlight the basin(s) in figure 2-4 to clearly show the areas involved. What is the status of this transfer?	McKone	**New Text -** This agreement was completed in 2017. Minor Sewer Drainage Basin No. 32 was the only basin transferred to Northshore as part of this agreement; shown in Figure 2-4. Transfer of service area agreement added to Appendix B. Figure 2-4 (Sewer Drainage Basins), all other figures, and several updates to the chapters and appendices have been made to remove information regarding the City's NE 124th Street Sewer Drainage Basin since it is no longer part of the City's wastewater system.	*City (Pantzke), and RH2 (Gomez)*			
9	Page 2-10	Water System	Please expand the water system discussion to clarify whether there are any public or private wells within the sewer service area. Also provide a brief discussion about the proximity of the identified major water facilities to key wastewater facilities. The focus of this section should be on identifying where wastewater facilities may have a potential to conflict with or impact drinking water facilities or supplies for the city or neighboring jurisdictions. Please also include a map showing the location of key water facilities (see WAC 173-240-050(d)(vii) and 050(j)).	McKone	Figure 2-6 (Existing Water and Sewer Systems) has been added. **New Text -** None of the City's wastewater facilities are located adjacent to major drinking water facilities for the City or adjacent drinking water purveyors. As a result of this separation, the City's wastewater facilities are unlikely to conflict with or impact the drinking water facilities or supplies for the City or neighboring purveyors. **New Text -** The City is not aware of any active public springs or wells within the City limits. However, there are a number of private wells adjacent to the City's sewer service area, as shown in Figure 2-6.	*City (Pantzke), and RH2 (Gomez)*			

No.	Dwg. Sheet No. / Spec. & Page No.	Sector / Paragraph No.	Comment	Reviewer last name	Response	Responder	Reviewer Check Off	Implementation	
								Date	Initials
10	Page 4-10	Projected wastewater flow rate - assumptions, 7th bullet	The method for projecting the future peak I/I is not clear. Page 4-9 discusses that the figures of 600 gpad (year 2021) and 2,000 gpad (year 2035) are the assumed future I/I rates for new construction in currently unsewered basins. The bullet point implies that these values are being added to the existing measured peak hour I/I rate for each basin. This would seem result in an overestimate of future I/I rates. Since only portions of each basin are currently unsewered, the future I/I impact should be proportional to the fraction of the full basin that is new versus existing. It also doesn't seem to assume any reductions due to I/I corrections in the existing systems. Please clarify the approach for projecting future I/I. Since Table 4-8 shows I/I from each basin in units of gpm, does the projection method first convert the per-acre I/I rates to per-minute rates based on that total sewered and unsewered areas in each basin?	McKone	The text regarding the method for projecting the future peak I/I has been modified to be clearer. **New Text -** The projected additional I/I flow rates of 600 gpad (for 2021) and 2,000 gpad (for 2035) for new construction were multiplied by the area of the potentially sewered areas (which are currently unsewered) in each basin to estimate the additional I/I flow for 2021 and 2035, respectively. The total projected total peak hour I/I flows for each basin were estimated by adding the projected additional I/I flow for new construction to the existing total peak hour I/I flow for that basin. The total peak hour I/I flow for each scenario was converted from gallons per day (gpd) to gallons per minute (gpm). For the purposes of this GSP, it was assumed the existing I/I flow rates would not further degrade over time in the City's exsting sewer system, and that the City's staff would perform maintenance on the City's sewer system in a manner that would prevent further degradation of the existing sewer system. **New Text -** In addition, the results of improvement projects to correct I/I in an existing sewer system can be highly variable in effectiveness for I/I reduction and are difficult to predict.	*RH2 (Gomez)*			
11	Page 4-12	Projected wastewater flow rate - modeling	The paragraph below table 4-9 suggests that some of the gravity mains may have enough storage capacity to accommodate some of the 20-year peak I/I flow. Does the city's current system modeling evaluate hydraulic grade lines for the collection system under peak flow conditions? Has the modeling verified this assumption? Will use of the gravity system for peak I/I storage result in any unacceptable surcharging?	McKone	The sentence of this paragraph regarding potential additional storage was removed. The City will not rely on this unknown possibility unless it is confirmed.	*City (Pantzke)*			

No.	Dwg. Sheet No. / Spec. & Page No.	Sector / Paragraph No.	Comment	Reviewer last name	Response	Responder	Reviewer Check Off	Implementation	
								Date	Initials
12	Chapter 5	SSO Response	Please include discussion of policies and procedures for responding to sewer overflows. Include details about notification procedures (who is notified along with when and how they are notified) as well as general actions the field crew will take in response to overflows. Does the City notify Ecology of SSOs? Are appropriate stormwater utilities notified if a SSO enters a storm drain?	McKone	**New Text -** The City encourages all employees to call the City Response Team at 425-581-3900 24 hours a day if they notice a pipe leak of any kind. This includes sewer overflows and even drinking water leaks. The City's procedure for responding to pipe leaks includes the City employee or City Response Team to calling Ecology's Northwest Office at 425-649-7000 and report the pipe leak to the Environmental Report Tracking System (ERTS), even for drinking water leaks. **New Text -** When responding to a sewer overflow, City procedure is for field staff to determine the best practices to evaluate the situation and implement those practices as appropriate to prevent further contamination. This includes, but is not limited to, using vactor trucks to clean up leaks and clean out blockages, roadway cleanup, sandbagging, and providing emergency power when appropriate.	*City (Pantzke)*			
13	Page 5-2	Regulations	While the city's activities related to conveyance of domestic sewage discussed in this general sewer plan do not require NPDES permit coverage, the city must maintain NPDES permit coverage under the Phase II Municipal Stormwater General Permit (MSGP). The MSGP contains requirements that do relate to this plan, such as illicit connections of sanitary sewer to stormwater systems, or direct inflow of stormwater systems into the sanitary system. It should also be noted that any SSO that may reach surface water or groundwater is considered an unpermitted discharge to waters of the state under state law.	McKone	Noted; see responses to Comment Nos. 4 and 12.	*City (Pantzke)*			
14	Page 5-4	Gravity Sewer Design Criteria	Please identify the minimum slope and minimum flow velocity to be achieved for new gravity sewers.	McKone	**New Text -** All new gravity sewers shall be designed to have a minimum velocity of 2.0 feet per second when flowing full. **New Text -** All new gravity sewers shall be designed with a minimum slope according to what is listed in Table C1-1 of Ecology's Criteria for Sewage Works Design (e.g. a minimum slope of 0.40 feet per 100 feet for 8-inch diameter gravity sewer).	*RH2 (Gomez)*			

No.	Dwg. Sheet No. / Spec. & Page No.	Sector / Paragraph No.	Comment	Reviewer last name	Response	Responder	Reviewer Check Off	Implementation	
								Date	Initials
15	Page 8-8	Preventive Maintenance - Sewer Collection System	The maintenance schedule beginning at the bottom of page 8-8 lists a "daily" frequency for video inspection of sewer mains. Please verify frequency. This statement could be read to imply that each main is video inspected daily, which is unlikely the case. Annual or semi-annual seems more typical with more frequent or less frequent possible based on pipe-specific characteristics.	McKone	**New Text -** Every 1 to 6 Months, Depending on History of Maintenance in Area - Inspect, rod, and clean sewer lines with known root intrusion and/or FOG problems. Sewer lines included in these additional "hot spot" cleaning activities are selected based on historical maintenance logs, operator experience, and sewer main video inspection results. **New Text -** Every 5 Years - Video inspect all sewer mains. Routine sewer main maintenance and repairs based on video inspections.	*City (Pantzke)*			
16	Page 8-9	Preventive Maintenance - Engine Generator Sets	What is the typical frequency for exercising the generators? Are generators exercised under load?	McKone	**New Text -**The generators are exercised weekly under load.	*City (Pantzke)*			
17	Page 9-6	Government Programs, Department of Ecology	The Centennial and Federal 319 programs mentioned are unlikely sources for the City. The Centennial fund is dedicated for grants to hardship communities for wastewater facility construction projects along with grants for non-point source projects. The Federal 319 program is exclusively for non-point source activities. The SRF fund is the most applicable to the City and can be used for construction projects along with planning and design projects. Planning could include financing a detailed I/I evaluation that includes flow monitoring, smoke testing, video inspections, and other assessments as well as developing and examining potential corrective actions.	McKone	References to the Centennial and Federal 319 programs were removed from the Chapter.	*City (Pantzke)*			

STATE OF WASHINGTON
DEPARTMENT OF ECOLOGY
Northwest Regional Office • 3190 160th Ave SE • Bellevue, WA 98008-5452 • 425-649-7000
711 for Washington Relay Service • Persons with a speech disability can call 877-833-6341

February 21, 2019

Kathy Brown
Public Works Director
City of Kirkland
123 5th Avenue
Kirkland, WA 98033

RE: **City of Kirkland General Sewer Plan – December 2018**

Dear Kathy Brown:

The Department of Ecology (Ecology) has reviewed the City of Kirkland's General Sewer Plan, dated December 2018. Pursuant to RCW 90.48.110 and WAC 173-240-030, Ecology hereby approves this General Sewer Plan. A copy of the General Sewer Plan (with Ecology's approval stamp) is enclosed for your records.

Sewage facilities within the planning area boundary must be constructed according to the approved General Sewer Plan or amendments thereto. Engineering reports and plans and specifications for sewer lines extensions, including pump stations, need not be submitted for approval. In the following situations Ecology approval is necessary for sewer line extensions prior to construction:

- The proposed sewers or pump stations involve installation of overflows or bypasses.
- The proposed sewers or pump stations discharge to an overloaded treatment, collection, or disposal facility.

If you have any questions concerning this approval, please contact Shawn McKone at (425) 649-7037 or shmc461@ecy.wa.gov.

Sincerely,

Rachel McCrea

Rachel McCrea
Water Quality Section Manager
Northwest Regional Office

e-cc: Steve Hirschey, King County Utility Technical Review Committee
Josh Pantzke, Utility Manager, City of Kirkland
Kenny Gomez, Project Engineer, RH2 Engineering

Enclosure: Copy of Approved Plan

APPENDIX K

Public Review and City Adoption (Forthcoming)

ORDINANCE O-4696

AN ORDINANCE OF THE CITY COUNCIL OF THE CITY OF KIRKLAND ADOPTING THE KIRKLAND GENERAL SEWER PLAN.

WHEREAS, the City of Kirkland Department of Public Works ("Department") has determined that improvements to the City's sewer system are needed; and

WHEREAS, the Department prepared a General Sewer Plan ("GSP"), dated December 2018, for the City sewer service area as required by RCW 90.48.110 if a City is going to improve its sewer system; and

WHEREAS, the GSP has been submitted to all neighboring agencies and cities for their review and comment for consistency with their respective plans; and

WHEREAS, the GSP has also been submitted to the Washington State Department of Ecology as required by RCW 90.48.110 and WAC 173-240-050, which has been approved; and

WHEREAS, the Council has determined the GSP should be adopted and by ordinance as required by RCW 35.67.030.

NOW, THEREFORE, the City Council of the City of Kirkland do ordain as follows:

Section 1. The City of Kirkland General Sewer Plan dated December 2018, is herein adopted by reference as the comprehensive sewer system plan for the Kirkland sewer service area.

Section 2. Kirkland Municipal Code Section 15.44.020 is amended to read as follows:

15.44.020 Adoption by reference.
(a) The sanitary sewer comprehensive plan prepared~~, published~~ and recommended by the Kirkland department of public works under the title "City of Kirkland ~~Comprehensive~~ General Sewer ~~System~~ Plan" dated ~~April 1993~~December 2018, including worded text, maps, attachments and appendices thereto are by this reference adopted as the sanitary sewer comprehensive plan for the Kirkland sanitary sewer service area.

~~(b) Said publication has been endorsed with the title and number of the ordinance codified in this chapter, dated and signed by the mayor, attested to by the finance and administration department (ex officio city clerk) and is incorporated herein as a part of this chapter.~~

~~(c) The comprehensive sanitary sewer plan heretofore adopted for the Kirkland sanitary sewer service area by this section of the Kirkland Municipal Code is amended and supplemented as set forth in Exhibit A attached to the ordinance codified in this subsection, and by this~~

~~reference incorporated herein. Exhibit A dated April 1993, was prepared, published and recommended by the Kirkland department of public works~~.

(d) A copy of the ordinance and the General Sewer Plan ~~codified in subsection (c) and this subsection (d) including Exhibit A~~ shall be recorded in the office of the city clerk and copies shall be filed in the following city departments for the use of the general public and the affected departments of the city: department of public works, planning and building department. Copies shall also be filed with such other local, county and state agencies as may be required by law.

Section 3. If any provision of this ordinance or its application to any person or circumstance is held invalid, the remainder of the ordinance or the application of the provision to other persons or circumstances is not affected.

Section 4. This ordinance shall be in force and effect five days from and after its passage by the Kirkland City Council and publication pursuant to Section 1.08.017, Kirkland Municipal Code in the summary form attached to the original of this ordinance and by this reference approved by the City Council.

Passed by majority vote of the Kirkland City Council in open meeting this 16th day of July, 2019.

Signed in authentication thereof this 16th day of July, 2019.

Penny Sweet

Penny Sweet, Mayor

Attest:

Kathi Anderson

Kathi Anderson, City Clerk

Approved as to Form:

Kevin Raymond

Kevin Raymond, City Attorney