LAST REVISED: 01/2020

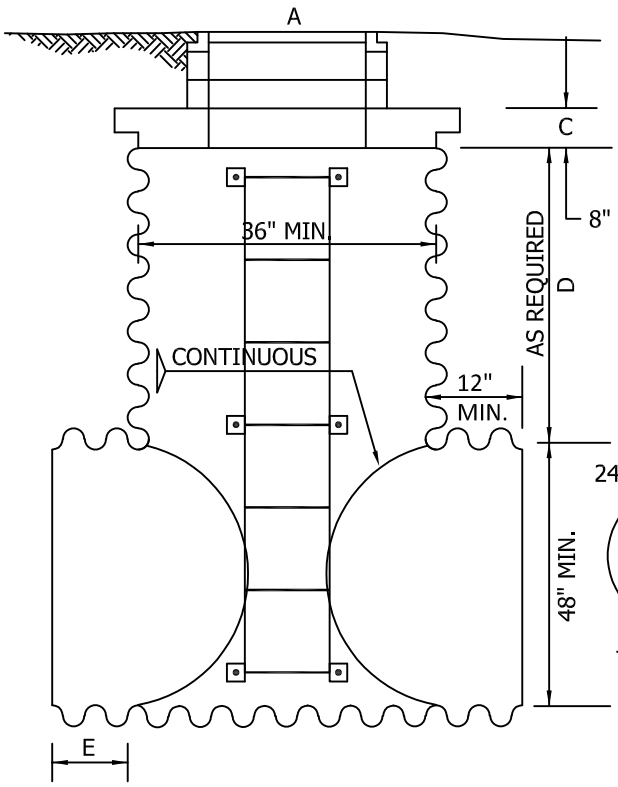

CONCENTRIC ELEVATION

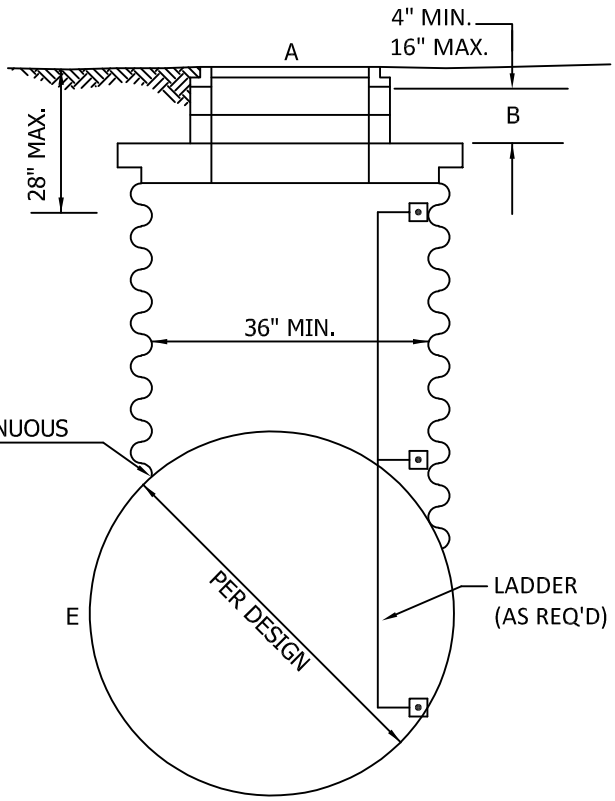

ECCENTRIC SECTION

LEGEND

A. 24" MANHOLE FRAME WITH LOCKING COVER PER CK-D.18.

B. CONCRETE GRADE RINGS AS NEEDED TO MATCH FINISHED GRADE

C. CONCRETE TOP SLAB SHORT ADJUSTMENT UNIT WITH OLYMPIC FOUNDRY DI FRAME AND GRATE PER STANDARDS

D. MATERIAL TO MATCH DETENTION PIPE. CMP RISER: 16 GAUGE HELICAL OR ANNULAR CORRUGATED METAL PIPE, MATERIAL AND DIAMETER TO MATCH DETENTION PIPE. FOR DEPTHS GREATER THAN 4' USE STEPS PER STANDARD PLAN CK-D.12. FOR DEPTHS GREATER THAN 5' AN ACCESS RISER WITH A MINIMUM DIAMETER OF 48" WILL BE USED.

E. CORRUGATED METAL STUBS AND DETENTION PIPE TO BE SAME GAUGE. STUB LENGTHS TO BE 12" MIN.

NOTES

1. ALL METAL PARTS AND SURFACES MUST BE MADE OF CORROSIVE RESISTANT MATERIAL OR ASPHALT COATED TREATMENT #1 GALVANIZED. COMPLETE CORROSION PROTECTION MUST BE ASSURED.
2. NOT FOR USE IN PUBLIC ROADWAYS. USE IN DRIVEWAYS AND OTHER TRAFFIC AREAS AS APPROVED BY PUBLIC WORKS.
3. A MAX. DEPTH OF 15' AND A MAX. COVER OF 8' IS ALLOWED FOR TANKS.

CITY OF KIRKLAND	
PLAN NO. CK- D.32	
CITY OF KIRKLAND WASHINGTON	CORRUGATED METAL MANHOLE