LAST REVISED:01/07/08

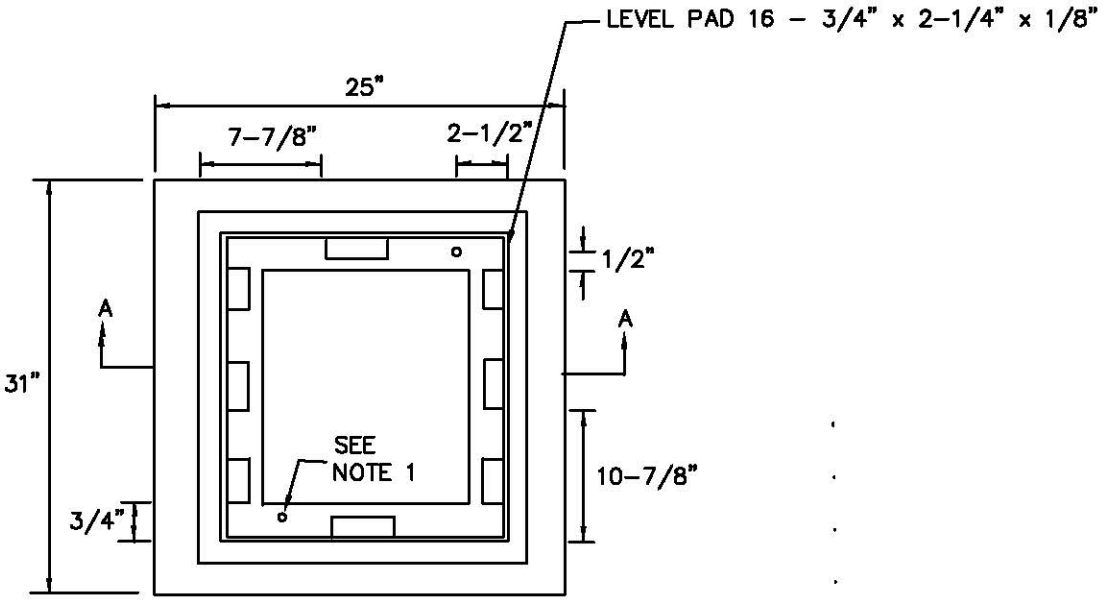

PLAN VIEW
NTS

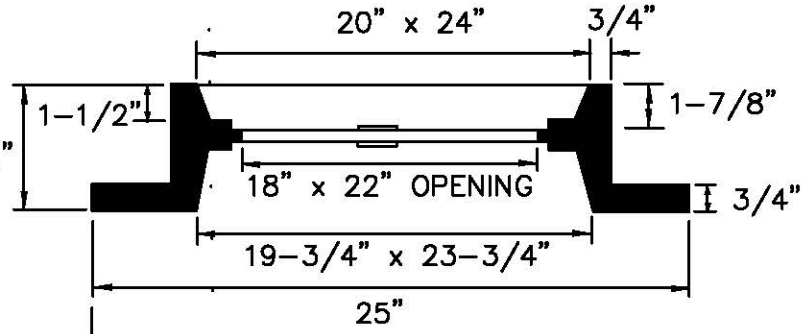

SECTION A–A
NTS

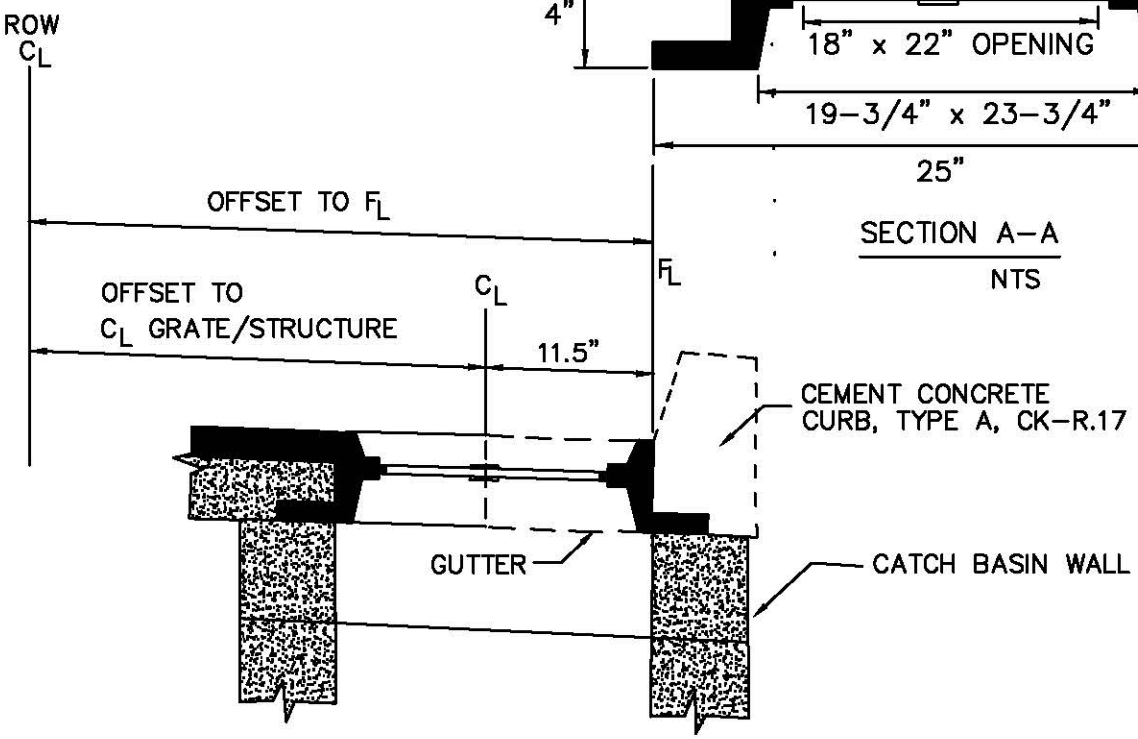

TYPE 1 CATCH BASIN ALIGNMENT CROSS SECTION
NTS

NOTE:

1. FRAME MATERIAL IS CAST IRON PER ASTM A48 CLASS 30.
2. SET FRAME TO GRADE AND CONSTRUCT ROAD AND GUTTER TO BE FLUSH WITH FRAME.
3. BACK OF FRAME SHALL BE IN FLOWLINE OF GUTTER.

CITY OF KIRKLAND	
PLAN NO. CK– D.16A	
CITY OF KIRKLAND WASHINGTON	STANDARD FRAME WITH CURB INSTALLATION