LAST REVISED:01/2020

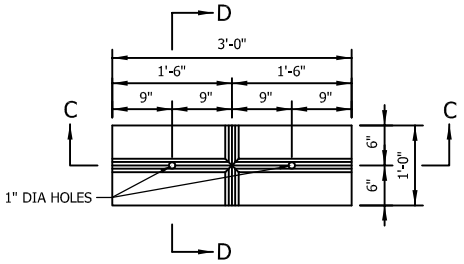

CURB PLAN

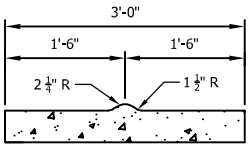

SECTION C-C

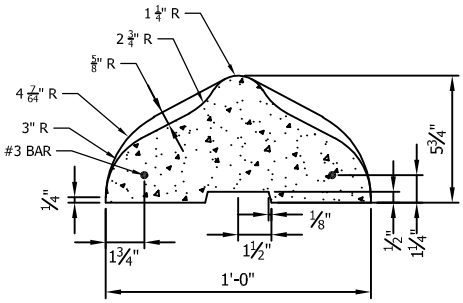

SECTION D-D

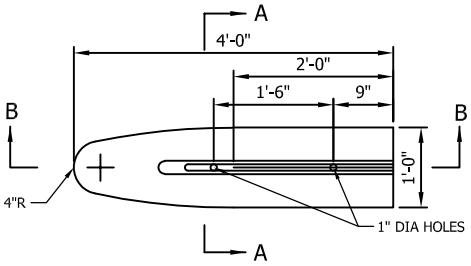

NOSING

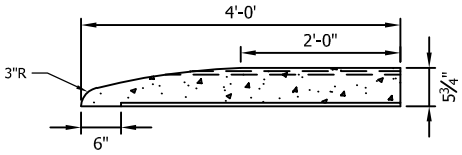

SECTION B-B

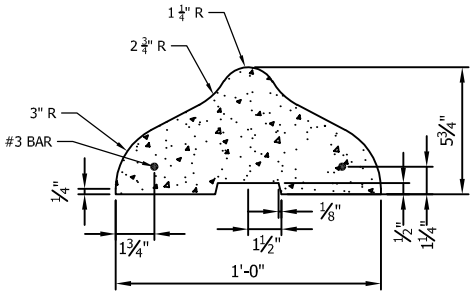

SECTION A-A

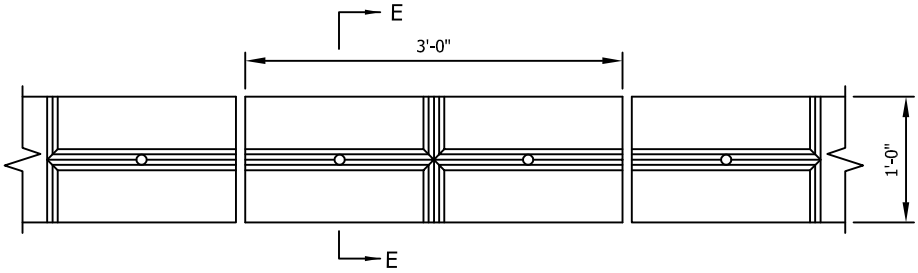

INSTALLATION DETAIL FOR STRAIGHT PRECAST TRAFFIC CURB

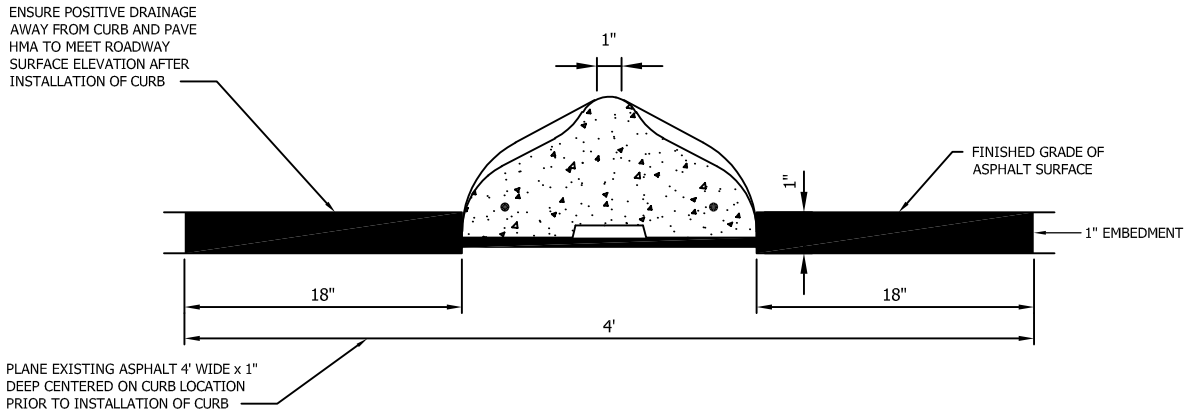

SECTION E-E

NOTES:

1. ALL JOINTS BETWEEN ASPHALT PATCH AND EXISTING PAVEMENT SHALL BE SEALED.
2. THE ADHESIVE SHALL MEET THE REQUIREMENTS OF SECTION 9.26 OF THE WSDOT STANDARD SPECIFICATION. USE APPROPRIATE ADHESIVE TYPE FOR EXISTING CONDITIONS.
3. MEDIAN CURB SHALL BE PAINTED. PAINT SHALL MEET SECTION 9.34.2 OF THE WSDOT STANDARD SPECIFICATION.

CITY OF KIRKLAND

PLAN NO. CK–R.19A

CITY OF KIRKLAND WASHINGTON

MEDIAN CURB