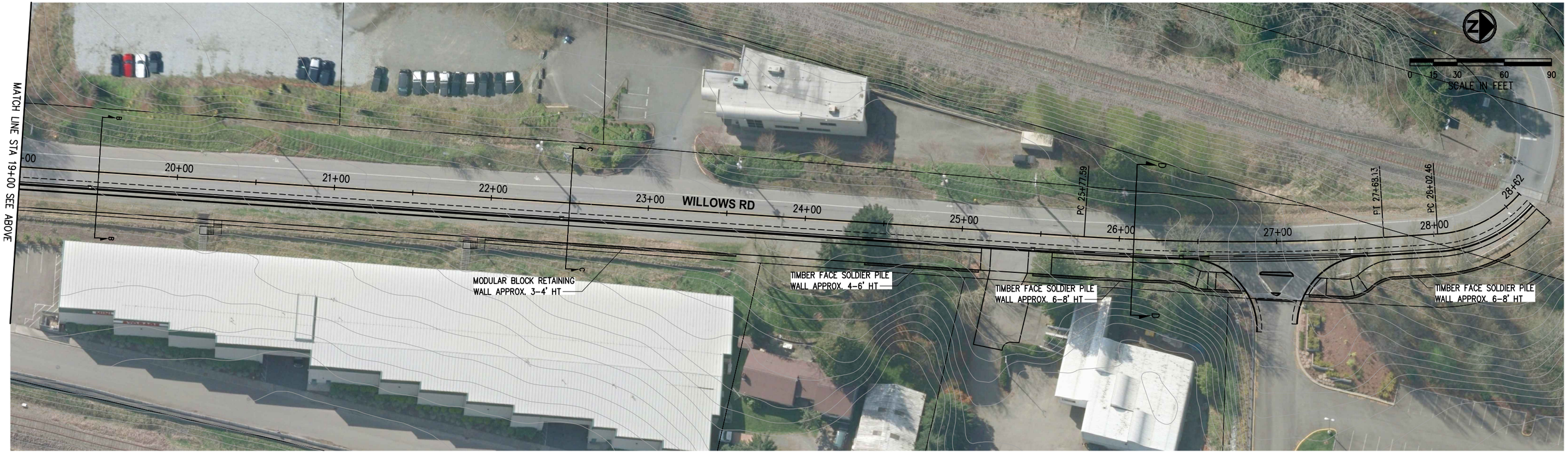

CITY OF KIRKLAND - WILLOWS ROAD
REGIONAL TRAIL CONNECTION "MISSING LINK"
CONCEPTUAL LAYOUT

CITY OF KIRKLAND WASHINGTON

KPG
Interdisciplinary Design
3131 Elliott Ave
Suite 400
Seattle, WA 98121
(206) 286-1640
2502 Jefferson Ave
Tacoma, WA 98402
(253) 627-0720
www.kpg.com

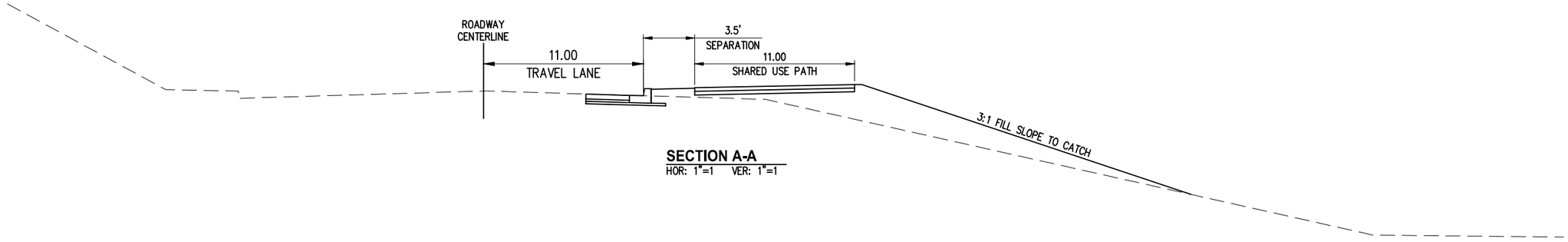

SECTION A-A
HOR: 1"=1 VER: 1"=1

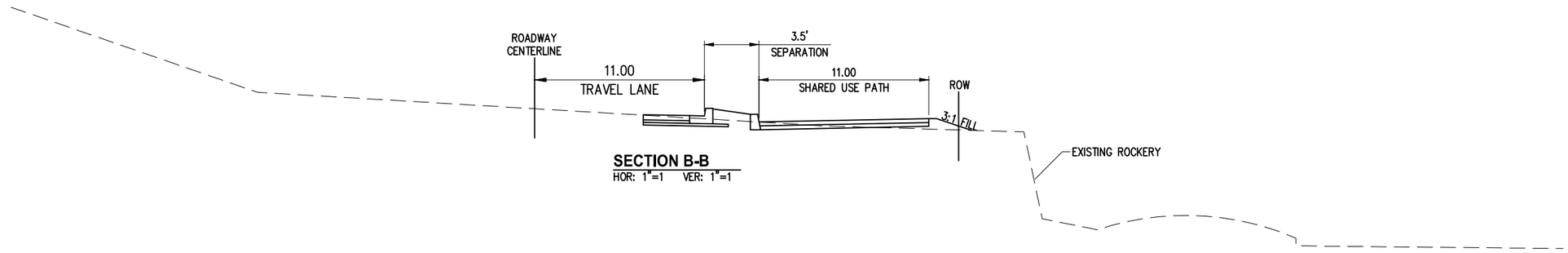

SECTION B-B
HOR: 1"=1 VER: 1"=1

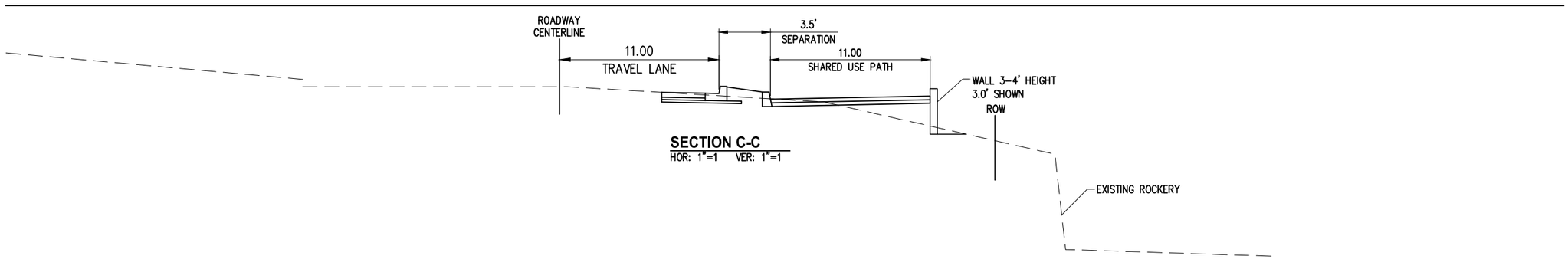

SECTION C-C
HOR: 1"=1 VER: 1"=1

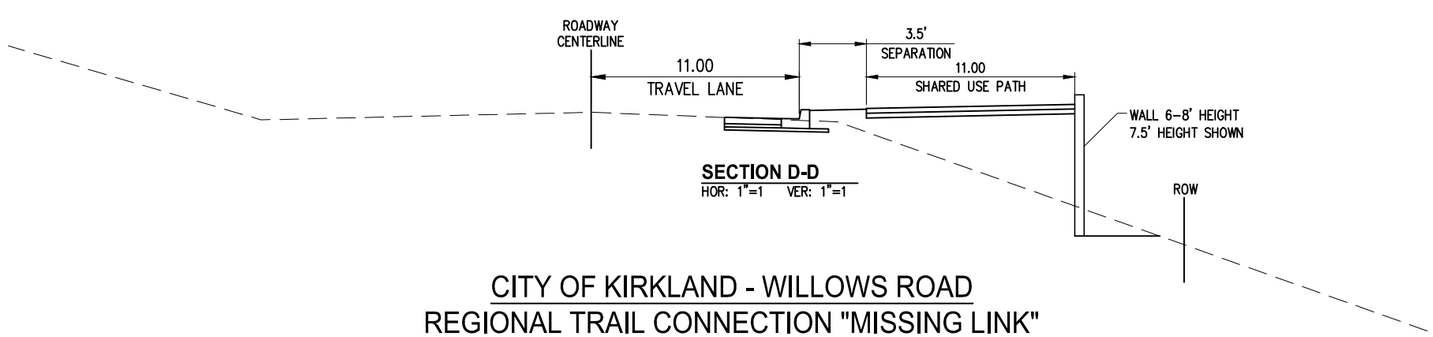

SECTION D-D
HOR: 1"=1 VER: 1"=1

CITY OF KIRKLAND - WILLOWS ROAD
REGIONAL TRAIL CONNECTION "MISSING LINK"
CONCEPTUAL LAYOUT

CITY OF KIRKLAND WASHINGTON

KPG
Interdisciplinary Design
3131 Elliott Ave
Suite 400
Seattle, WA 98121
(206) 286-1640
2502 Jefferson Ave
Tacoma, WA 98402
(253) 627-0720
www.kpg.com