CITY OF KIRKLAND
Planning and Building Department
123 5th Avenue, Kirkland, WA 98033
425.587.3600 - www.kirklandwa.gov

ADVISORY REPORT
FINDINGS, CONCLUSIONS, AND RECOMMENDATIONS

To: Kirkland Hearing Examiner

From: *Désirée Goble* Désirée Goble, Project Planner

Eric R. Shields, AICP, Planning Director

Date: April 3, 2017

File: **ROSE POINT LIFT STATION REPLACEMENT (ZON16-00810)**

Hearing Date and Place: April 10, 2016 at 9:00 am
City Hall Council Chamber
123 Fifth Avenue, Kirkland

TABLE OF CONTENTS

Section **Page**
I. INTRODUCTION 2
A. APPLICATION 2
B. RECOMMENDATIONS 2
II. FINDINGS OF FACT AND CONCLUSIONS 3
A. SITE DESCRIPTION 3
B. HISTORY 4
C. PUBLIC COMMENT 5
D. STATE ENVIRONMENTAL POLICY ACT (SEPA) & CONCURRENCY 5
E. APPROVAL CRITERIA 5
F. SHORELINE POLICIES 6
G. DEVELOPMENT REGULATIONS 9
H. SHORELINE MASTER PROGRAM (SMP) 10
I. COMPREHENSIVE PLAN 18
J. DEVELOPMENT STANDARDS 19
III. SUBSEQUENT MODIFICATIONS 19
IV. CHALLENGES AND JUDICIAL REVIEW 19
A. APPEAL TO CITY COUNCIL 19
B. APPEAL TO SHORELINE HEARINGS BOARD 19
C. JUDICIAL REVIEW 19
V. LAPSE OF APPROVAL 19
VI. APPENDICES 20
VII. PARTIES OF RECORD 20

I. INTRODUCTION

A. APPLICATION

1. Applicant: Brian Casey, Murray, Smith & Associates

2. Site Location: Located in the right-of-way (r-o-w) east of 1803 and 1811 10th Street West (see Attachment 1). All proposed work will be located within 200 feet of Lake Washington.

3. Request: The current Rose Point lift station is nearing the end of its useful life (approximately 30 years old). The proposal is to construct the Rose Point Lift Station at the base of the hillside located on the east of 10th Street West (see Attachment 2). A Substantial Development Permit (SDP) is required since the proposed work will occur within 200 feet of Lake Washington. The project includes:

   a. construction of a new lift station that can accommodate peak flows, while utilizing the existing dry pit for off-line storage; and

   b. a 300 square foot control and generator room; and

   c. a retaining wall (8 feet high above finished grade); and

   d. a back-up generator; and

   e. a standby generator to power the facility in the event of a power outage; and

   f. removal of six significant trees located within the right-of-way on the uphill side of the project.

   The existing lift station is located below grade on the west side of the paved surface of 10th Street West. This station needs to remain functional until the new lift station is available.

4. Review Process: Kirkland Zoning Code (KZC) Section 15.20.120 for a Utility requires a Process IIA in which the Hearing Examiner conducts a public hearing and makes the final decision. KZC Section 83.170 requires a Shoreline Substantial Development Permit (SDP) for a Utility Transmission Facility. An SDP is a Process I, Planning Director Decision.

   KZC Section 141.70 requires that when an SDP is part of a proposal that involves approval through Process IIA, the entire proposal will be decided upon using that process.

5. Summary of Key Issues and Conclusions:

   a. Compliance with Shoreline Master Program Policies (see Sections II.F & II.H)

   b. Compliance with Zoning Code regulations (see Section II.G)

   c. Compliance with applicable Comprehensive Plan Policies (see Section II.I)

B. RECOMMENDATIONS

1. Based on Statements of Fact and Conclusions (Section II), and Attachments in this report, we recommend approval of this application subject to the following conditions:

2. This application is subject to the applicable requirements contained in the Kirkland Municipal Code (KMC), Zoning Code Kirkland Zoning Code Kirkland Zoning Code (KZC), and Building and Fire Code. It is the responsibility of the applicant to ensure compliance with the various provisions contained in these ordinances. Attachment 3, Development Standards, is provided in this report to familiarize the applicant with some of the additional development regulations. This attachment does not include all of the additional regulations. When a condition of approval conflicts with a development regulation in Attachment 3, the condition of approval shall be followed.

3. As part of the application for a Building Permit the applicant shall submit:

   a. A landscape plan showing compliance, to the maximum extent possible, with the parking buffer requirements of KZC Section 95.45.1 for parking areas and driveways visible from public use areas (see Conclusion II.H.1.b).

   b. Plans showing compliance with KZC Sections 15.20.120 Special Regulation PU-4.b and 83.240.1.h by either providing space for native landscape plantings that would either cascade over the retaining wall or be planted at grade to screening the retaining wall and west side of the structure (see Conclusions II.G.2 and II.H.1.b).

   c. Plans showing that all exterior building-mounted and ground-mounted light fixtures shall comply with KZC Sections 83.470.4 (see Conclusion II.H.1.b).

   d. Plans showing that the parking area doesn't exceed the maximum necessary for the proposed use (see Conclusions II.H.1.b).

II. FINDINGS OF FACT AND CONCLUSIONS

A. SITE DESCRIPTION

1. Site Development and Zoning:

   a. Facts:

      (1) Size: The site plan indicates the limits of disturbance for all improvements encompasses approximately 7,000 square feet (this includes both above and below grade improvements).

      (2) Land Use: 10th Street West r-o-w; the above grade improvements will occur within the unimproved area of r-o-w on the east side of the paved driving surface.

      (3) Zoning: Waterfront District II (WDII) and Low Density Residential (RS 8.5)

      (4) Shoreline Designation: Residential Low (B)

      (5) Location: Does not abut Lake Washington. There is an intervening private community beach and two detached single family residences located between Lake Washington and the limits of disturbance.

      (6) Terrain: The proposed structure will be located at the base of a high landslide hazard area as identified on the City's critical areas

maps. The inclination of the slope is approximately 2.5 feet horizontal to 1.0 foot vertical (a slope of approximately 40 percent). A geotechnical report was prepared by GeoEngineers, dated August 28, 2015 (see Attachment 4).

(7) Vegetation: There are six significant Maple trees located on the top of the slope. The proposed excavation and subsequent improvements will not allow retention of these trees, as discussed in the arborist report prepared by Brooke Sullivan, Back to Nature Design, dated March 25, 2016 (see Attachment 5). In addition to the Maple trees the dominant plants on the slope are grasses, blackberry vines, ivy, and bulbs.

b. Conclusions: Size, land use, zoning, shoreline designation, and shoreline location are not constraining factors in the consideration of this application. Improvements are for the public benefit and all 6 trees are recommended for removal because the excavation will disturb more than 33% of their root zones, diminishing their health, likely destabilizing these trees. Terrain should not be an issue provided that all recommendations in the Geotechnical report are implemented as discussed in Section II.H.

2. Neighboring Development and Zoning:

a. Facts: All properties adjoining Lake Washington are zoned Waterfront District II (WDII) and are improved with single-family residences with one exception. The property directly west of the proposed lift station site contains a private community beach. The remaining properties to the east are zoned low density residential with a minimum lot size of 8,500 square feet (RS 8.5). All of these properties are developed with single-family residences.

b. Conclusion: The neighboring development and zoning are not constraining factors in the review of this application.

B. HISTORY

1. Facts:

a. The current facility provides sanitary sewer access to properties located in the northern area of the Market Neighborhood.

b. The applicant has stated that the existing lift station, located below ground on the west side of the paved r-o-w east of the private community beach, was constructed in 1972 and improvements to this facility occurred in 1987. As-built drawings and/or a shoreline permit could not be located for construction of the current facility.

c. The 1949 record drawing for the Rose Point Sewer System (RD47) shows that the current area was connected to a line that extended south connecting to a line serving properties located along 5th Avenue West and Lake Avenue West.

d. The April 2000 record drawing (RD1600) indicates that the current lift station no longer connects to the sewer line that serves 5th Avenue West and Lake Avenue West.

2. Conclusion: Sewer lines have been in existence for at least 70 years. The existing below ground sewer lift station facility is nearing its useful life and the must remain functional until the replacement lift station is operational.

C. PUBLIC COMMENT

The public comment period for this proposal ran from June 30 through August 1, 2016. No public comments were received during this time.

D. STATE ENVIRONMENTAL POLICY ACT (SEPA) & CONCURRENCY

The project, as described, is exempt from SEPA review by WAC 197-11-800(23). Concurrency review is only applicable when a project is subject to SEPA review.

E. APPROVAL CRITERIA

1. GENERAL ZONING CODE CRITERIA

   a. Fact: Zoning Code section 150.65.3 states that a Process IIA application may be approved if:

      (1) It is consistent with all applicable development regulations and, to the extent there is no applicable development regulation, the Comprehensive Plan; and

      (2) It is consistent with the public health, safety, and welfare.

   b. Conclusion: The proposal complies with the criteria in section 150.65.3. It is consistent with all applicable development regulations (see Sections II.G and II.H) and the Comprehensive Plan (see Section II.I). In addition, it is consistent with the public health, safety, and welfare because it will upgrade the existing sanitary sewer lift station assuring current and future needs are met while reducing the risk of a potential failure of the existing lift station.

2. REVIEW CRITERIA FOR SHORELINE SUBSTANTIAL DEVELOPMENT PERMIT

   a. Facts: KZC Section 141.70 states that Shoreline Substantial Development Permit (SDP) must meet WAC 173-27-140 and WAC 173-27-150. The approval criteria are discussed below:

      (1) WAC 173-27-140 establishes the general review criteria under which the City may issue a permit for development within shorelines jurisdiction.

         (a) No authorization to undertake use or development on shorelines of the state shall be granted by the local government unless upon review the use or development is determined to be consistent with the policy and provisions of the Shoreline Management Act and the master program.

         (b) No permit shall be issued for any new or expanded building or structure of more than thirty-five feet above average grade level on shorelines of the state that will obstruct the view of a substantial number of residences on areas adjoining such shorelines except where a master program does not prohibit the same and then only when overriding considerations of the public interest will be served.

(2) WAC 173-27-150 establishes that a Substantial Development Permit may only be granted when the proposed development is consistent with all of the following:

(a) The policies and procedures of the Shoreline Management Act (WAC 173-26-176);

(b) The provisions of WAC Chapter 173-27, which outlines the permit review process for SDP's;

(c) The applicable Shoreline Master Program (SMP), which can be found in Chapter 83 of the Kirkland Zoning Code.

b. Conclusions:

(1) The project is consistent with WAC 173-27-140 and WAC 173-27-150. The project is consistent with the applicable policies of the City's SMP found in the Shoreline Area Chapter of the Comprehensive Plan and is consistent with the shoreline regulations in KZC Chapter 83 or can be made consistent through conditions placed on the SDP as discussed below in Sections II.F through II.I.

(2) A complete application for a SDP has been submitted and the City has given appropriate notice of the application and is thus consistent with WAC 173-27.

(3) The project is consistent with the policies and procedures of the Shoreline Management Act because it will protect the resources and ecology of the shoreline by allowing a new lift station to be constructed substantially reducing the chances of the existing lift station failing and/or effluent overflows into Lake Washington during heavy rainfall events.

(4) The proposed above grade structure will be cut into the base of a slope and will be 14.5 feet above finished grade, well below the thirty-five feet above average grade level allowed on shorelines of the state (see Section II.G.1).

F. SHORELINE POLICIES

Below are the shoreline policies found in the Shoreline Area Chapter of the Comprehensive Plan that are applicable to the project, along with staff comments. WAC 173-27-140 requires that a proposal be consistent with the local shoreline master program which includes these policies.

1. Facts:

a. **Policy SA-2.3.b:** Designate properties as Residential – Low (L) to accommodate low-density residential development. Access, utilities, and public services should be available and adequate to serve existing needs and/or planned future development.

Staff comments: *The replacement of the existing sewer lift station with the current proposal will assure that both existing and future needs will be met.*

b. **Policy SA-3.7:** Limit outdoor lighting levels in the shoreline to the minimum necessary for safe and effective use.

Artificial lighting can be used for many different purposes along the waterfront, including to aid in nighttime activities that would be impossible or unsafe under normal nighttime conditions, for security, or simply to make a property more attractive at night. At the same time, the shoreline area can be vulnerable to impacts of light and glare, potentially interrupting the opportunity to enjoy the night sky, impacting views and privacy and affecting the fish and wildlife habitat value of the shoreline area. To protect the scenic value, views, and fish and wildlife habitat value of shoreline areas, excessive lighting is discouraged. Shoreline development should use sensitive waterfront lighting to balance the ability to see at night with the desire to preserve the scenic and natural qualities of the shoreline. Parking lot lighting, lighting on structures or signs, and pier and walkway lighting should be designed to minimize excessive glare and light trespass onto neighboring properties and shorelines.

Staff comment: *Shoreline regulations contain lighting standards designed to minimize impacts on neighboring developments from excessive glare and light trespass that will need to be addressed.*

c. **Policy SA-10.3:** Limit Land Surface Modification activities in the shoreline area.

Land Surface Modification activities are typically associated with upland development. These activities have the potential to cause erosion and siltation, increase runoff and flood volumes, reduce flood storage capacity and damage habitat and therefore should be carefully considered to ensure that any potential adverse impacts are avoided or minimized. Impacts from Land Surface Modification activities can be avoided through proper site planning, construction timing practices, and use of erosion and drainage control methods. Generally, these activities should be limited to the maximum extent necessary to accommodate the proposed use, and should be designed and located to protect shoreline ecological functions and ecosystem-wide processes.

And **Policy SA-13.3:** Manage development to avoid risk and damage to property and loss of life from geological conditions.

Geologically hazardous areas include landslide hazard areas, erosion hazard areas and seismic hazard areas. These areas, as a result of their slope, hydrology, or underlying soils, are potentially susceptible to erosion, sliding, damage from earthquakes or other geological events. These areas can pose a threat to health and safety, if development is not appropriately managed and the area studied as a condition of permitting construction.

Staff comments: *A geotechnical report (see Attachment 4) was required since the project site is located within a seismic, high and moderate landslide hazard areas according to the City's critical areas maps. The report included a statement at the bottom of page 7 indicating*

that the area is subject to a low to moderate risk of liquefaction during a moderate to large earthquake. Another statement on page 8 of the geotechnal report states: "…the lift station and related piping can be satisfactorily constructed within the lower portion of the slope, provided that the recommendations presented in this report are implemented during design and construction of the project."

d. **Policy SA-25.1:** Locate new utilities and related appurtenances outside of the shoreline area, unless this location is reasonably necessary for the efficient operation of the utility.

Utilities are services that produce and carry electric power, gas, sewage, water, communications and oil. The provision of these services and the appurtenances associated with them can create substantial impacts on the landscape and the functioning of the natural ecosystem. To minimize potential impacts, these facilities should be located outside of the shoreline area, and in particular, outside of the aquatic environment, where feasible. If necessary within the shoreline, utility facilities should be located and designed in a manner that preserves the natural landscape and shoreline ecology, and minimizes conflicts with present and planned land uses.

Staff comments: *This project is located as far away from the shoreline of Lake Washington as feasible given topography and other improvements in the area.*

e. **Policy SA-25.2:** Minimize impacts from the location, design, and maintenance of utility facilities located within the shoreline.

Careful planning and design is required to address impacts such as soil disturbance and intrusion on the visual setting. Potential adverse impacts should be minimized through the location, design and construction techniques used. For instance, where utility systems cross shoreline areas, clearing for installation or maintenance should be kept to a minimum width necessary to minimize impacts to trees and vegetation. Utilities should also be properly installed and maintained to protect the shoreline environment and water from contamination. The City should require location of utility lines prior to construction to avoid damaging the lines, incurring biological impacts, during construction.

Upon completion of utility installation or maintenance projects on shorelines, the shoreline area should be restored to pre-project configuration, replanted with native species and provided with maintenance care until the newly planted vegetation is established.

Even with revegetation, planting restrictions may limit the species that are replanted. As a result, existing functions may not be able to be fully restored. For this reason, utility corridors should be located outside of the shoreline jurisdiction, where possible.

Staff comments: *Shoreline regulations contain re-vegetation standards limiting choices to native species designed to minimize/mitigate negative impacts to the shoreline environment that need to be addressed.*

f. **Policy SA-3.5:** Limit parking within the shoreline area.

Facilities providing public parking are permitted within the shoreline area as needed to support adjoining water-oriented uses. Private parking facilities should be allowed only as necessary to support an authorized use. All parking facilities, wherever possible, should be located out of the shoreline area.

Staff comments: *The project has surface parking measuring approximately 35.5 by 18.5 feet for access to the facility. This space would be used by City staff during maintenance of the facility.*

g. **Policy SA-3.6:** Minimize the aesthetic impacts of parking facilities.

Parking areas should be placed, screened, and buffered to mitigate impacts through use of design techniques, such as location, lidding, landscaping or other similar design features to minimize the aesthetic impacts of parking facilities.

Staff comments: *This area will be visible from Lake Washington and surrounding properties to the west, including the private community beach. The proposed retaining wall and blank façade could be softened with the addition of native landscaping on the lower side of the proposed pump station between the east side of the paved edge of the right-of-way and west side of the pump station.*

2. Conclusions: The proposal is consistent with the policies of the City's Shoreline Area Chapter of the Comprehensive Plan provides that plans should be submitted showing final building materials, lighting, screening of the building, retaining walls and parking area as discussed in Section II.H of this report.

G. DEVELOPMENT REGULATIONS

Public Utility

1. Facts:

a. KZC Section 15.20.120 Special Regulation PU-4.b allows a public utility to be located within the WDII and RS 8.5 zones if the site and building design minimizes adverse impacts on surrounding residential neighborhoods.

b. The maximum allowed height of a structure within WD II and RS 8.5 zones is 25 feet above Average Building Elevation (ABE).

c. The only above ground structure is proposed at the base of the hill across the street from a private community beach (see Attachments 1 & 2).

d. The west elevation drawing shows a brick wall, with a glass brick just below the top of the external wall, and two openings covered by mechanical louvers (see Attachment 2, Sheet A3.0). Sheet A3.0 also shows an eight foot high retaining wall topped with a three foot high fence.

e. The portion of the structure visible from Lake Washington is 22 feet wide, approximately 14.5 feet above finished grade, and set back approximately

160 feet from Lake Washington. The remainder of the proposed improvements are located below grade.

f. There are no required setbacks or maximum lot coverage requirements for structures located within the right of way.

g. The building, will be cut into the base of the slope, has a proposed height of 14.5 feet above finished grade, this is well below the maximum allowable building height of 25 feet above ABE.

2. Conclusion: To minimize adverse impacts to surrounding residences, the west façade of the structure and retaining wall should provide space for plantings that would either cascade over the retaining wall or be planted at grade screening the retaining wall and west side of the structure to the maximum extent possible.

H. SHORELINE MASTER PROGRAM (SMP)

1. Facts:

a. The proposed lift station is considered a utility transmission facility and requires a substantial development permit. Attachment 6 contains the applicants' analysis of code compliance. Below is an analysis of the zoning code sections that apply to this proposal.

Not Applicable	Complies as Proposed	Complies as Conditioned	**Code Section**
Shoreline Development Standards – (see KZC Section 83.180, Utility located in the Residential –Low Shoreline Environment)			
☒	☐	☐	Shoreline Setback - R-L (B) 30% of the average parcel depth but not less than 30 ft. and not required to be greater than 60 ft. *Staff Comment: The area of work is completely located in the right-of-way and there is an intervening property with a private community beach (with a minimum property depth of 100 feet) located between the subject property and the proposed work.*
☒	☐	☐	Maximum Lot Coverage *Staff Comment: The area of work is completely located in the right-of-way, maximum lot coverage does not apply.*
☐	☒	☐	Maximum Height of Structure – 25 feet above average building elevation.
Utilities (see KZC Section 83.240)			
☐	☐	☒	See KZC Section 83.360 for requirements regarding avoiding and minimizing impacts when locating, designing,

Not Applicable	Complies as Proposed	Complies as Conditioned	**Code Section**
			constructing and operating a utility see (see KZC Section 83.240.1.a). *Staff Comment: This analysis is provided in Section H.1.b below.*
☐	☒	☐	Whenever feasible, utility facilities shall be located outside the shorelines jurisdiction. Whenever these facilities must be placed in a shoreline area, the location shall be chosen so as not to adversely impact shoreline ecological functions or obstruct scenic views (see KZC Section 83.240.1.b). *Staff Comment: The proposed facility will replace an existing pump station that needs to continue working while a replacement facility is constructed. Sewer lines have been located in this area since at least 1949.*
☐	☒	☐	Utilities shall be located in existing rights-of-way and utility corridors wherever feasible (see KZC Section 83.240.1.c). *Staff Comment: The drawings indicate that all work will occur within the right-of-way*.
☐	☒	☐	New utilities shall not be located water ward of the OHWM or in the Natural shoreline environment, unless it is demonstrated that no feasible alternative exists (see KZC Section 83.240.1.d). *Staff Comment: No work is proposed within Lake Washington or a natural shoreline environment*.
☐	☒	☐	Utility lines, pipes, conduits, cables, meters, vaults, and similar infrastructure and appurtenances shall be placed underground consistent with the standards of the serving utility to the maximum extent feasible (see KZC Section 83.240.1.e). *Staff Comment: The proposed above grade structure will contain a generator and equipment required for operation of the lift station.*
☒	☐	☐	Proposals for new utilities or new utility corridors in the shorelines jurisdiction must fully substantiate the infeasibility of existing routes or alternative locations outside of the shorelines jurisdiction (KZC Section 83.240.1.f).

Not Applicable	Complies as Proposed	Complies as Conditioned	**Code Section**
			Staff Comment: The proposal is for a replacement facility to serve existing sanitary sewer lines.
☒	☐	☐	Utilities that are accessory and incidental to a shoreline use shall be reviewed under the provisions of the use to which they are accessory (KZC Section 83.240.1.g). *Staff Comment: This is not an accessory use to an approved shoreline use.*
☐	☐	☒	Utilities shall provide screening of facilities from the lake and adjacent properties in a manner that is compatible with the surrounding environment. The City will determine the type of screening on a case-by-case basis (KZC Section 83.240.1.h) *Staff Comment: KZC Sections 15.40.120 and 95.42.1 requires public utilities on private properties to provide a 15-foot-wide landscaped strip planted with trees, shrubs, and living ground cover. To the maximum extent possible the west side of the structure and retaining wall should be screened from Lake Washington with native landscaping pursuant to Zoning Code section 95.42.1 and shoreline policy SA-25.2.*
☐	☒	☐	Utility development shall, through coordination with local government agencies, provide for compatible, multiple uses of sites and rights-of-way. Such uses include shoreline access points, trail systems and other forms of recreation and transportation, providing such uses will not unduly interfere with utility operations, or endanger public health and safety (KZC Section 83.240.1.i) *Staff Comment: The proposal will reduce the chance of the existing system failing or overflowing resulting in a public health and safety issue.*
Lighting (see KZC Section 83.470)			
☐	☐	☒	Direction and Shielding (see KZC Section 83.470.4.a.1) All exterior building-mounted and ground-mounted light fixtures shall be directed downward and have "fully shielded cut off" fixtures as defined by the Illuminating Engineering Society of North America (IESNA), or other appropriate measure to conceal the light source from adjoining uses, to

Not Applicable	Complies as Proposed	Complies as Conditioned	**Code Section**
			direct the light towards the ground and away from the shoreline, and to prevent lighting from spilling on to the lake water. *Staff Comment: The plans show two lights located on the north façade of the building. The final plans will need to show how the lights comply with this regulation.*
☐	☐	☒	Lighting Levels (KZC Section 83.470.4.b). 1) Exterior lighting installations shall be designed to avoid harsh contrasts in lighting levels. 4) Exterior lighting shall not exceed a strength of one (1) footcandle at the water surface of Lake Washington, as measured water ward of the OHWM. *Staff Comment: The applicants will need to show how they comply with this regulation when they apply for a building permit.*
☒	☐	☐	The maximum mounting height of ground-mounted light fixtures shall be 12 feet. Height of light fixtures shall be measured from the finished floor or the finished grade of the parking surface, to the bottom of the light bulb fixture (KZC Section 83.470.4.c). *Staff Comment: The proposed lights are building mounted.*
☐	☐	☒	Illumination of a building facade to enhance architectural features is not permitted (KZC Section 83.470.4.d.1). Where feasible, exterior lighting installations shall include timers, dimmers, sensors, or photocell controllers that turn the lights off during daylight hours or hours when lighting is not needed, to reduce overall energy consumption and eliminate unneeded lighting (KZC Section 83.470.4.d.1). *Staff Comment: The applicants will need to show how they comply with these regulations when they apply for a building permit.*
Parking (see KZC Section 83.440)			
☐	☐	☒	Number of Parking Spaces – Uses must provide sufficient off-street parking spaces. The required number of parking stalls established in KZC Chapter 105 with the applicable

Not Applicable	Complies as Proposed	Complies as Conditioned	**Code Section**
			parking standards for each use shall be met (KZC Section 83.440.2). *Staff Comment: The proposal includes surface paving measuring approximately 35.5 by 18.5 feet that could be used for parking. The applicants should show that area provides sufficient area to comply with these regulations when they apply for a building permit.*
☐	☐	☒	Design of Surface Parking Lots – In addition to the perimeter buffering and internal parking lot landscaping provisions established in Chapter 95 KZC, the applicant shall buffer all parking areas and driveways visible from public use areas with appropriate landscaping screening that is consistent with the landscaping and buffering standards for driving and parking areas contained in KZC Chapter 95 (KZC Section 83.440.4.b). *Staff Comment: No buffering of the parking area has been proposed.*
Geologically Hazardous Areas KZC Section 83.520			
☐	☒	☐	New use, development or activities or creation of new lots that would cause foreseeable risk to people or improvement from geological conditions during the life of the use, development or activities shall not be allowed (KZC Section 83.520.2.a). *Staff Comment: The applicant has submitted a Geotechnical Report (see Attachment 4) that addresses the seismic, moderate and high landslide hazards in the area and has proposed measures to minimize if not eliminate these issues.*
☒	☐	☐	New use, development or activities that would require structural shoreline stabilization over the life of the development shall not be allowed, except for the limited instances where stabilization is necessary to protect allowed uses where no alternative locations are available (KZC Section 83.520.2.b). *Staff Comment: No shoreline stabilization is being proposed.*

Not Applicable	Complies as Proposed	Complies as Conditioned	**Code Section**
☒	☐	☐	For protection of existing primary structures, stabilization structures or measures may be allowed when no alternatives, including relocation or reconstruction of existing structures, are found to be feasible (KZC Section 83.520.2.c). *Staff Comment: No shoreline stabilization is being proposed.*
☒	☐	☐	Stabilization structures or measures must be consistent with KZC Section 83.300 for shoreline stabilization and with KZC Section 83.360 for no net loss of ecological function (KZC Section 83.520.2.d). *Staff Comment: No shoreline stabilization work has been proposed.*
☐	☒	☐	Uses, developments, activities and shoreline modifications within geologically hazardous areas must be consistent with KZC Chapter 85 (KZC Section 83.520.2.e). *Staff Comment: The Geotechnical report addresses the requirements of KZC Chapter 85.*
☐	☒	☐	In addition to the required information contained in Chapter 85 KZC, any required geotechnical report shall also contain any additional information specified under the definition of geotechnical report contained in KZC Section 83.80 (KZC Section 83.520.2.f). KZC Section 83.80.54 provides the following definition of "Geotechnical Report – A scientific study or evaluation conducted by a qualified expert that includes a description of the ground and surface hydrology and geology, the affected land form and its susceptibility to mass wasting, erosion, and other geologic hazards or processes, conclusions and recommendations regarding the effect of the proposed development on geologic conditions, the adequacy of the site to be developed, the impacts of the proposed development, alternative approaches to the proposed development, and measures to mitigate potential site-specific and cumulative geological and hydrological impacts on the proposed development, including the potential adverse impacts to adjacent and down-current properties. Geotechnical reports shall conform to accepted technical standards and must be prepared by qualified

Not Applicable	Complies as Proposed	Complies as Conditioned	**Code Section**
			professional engineers (or geologists) who have professional expertise about the regional and local shoreline geology and processes." *Staff Comment: The Geotechnical report has addressed these requirements and the requirements of KZC Chapter 85.*
Archaeological and Historic Resources KZC Section 83.540			
☒	☐	☐	Permits submitted for land surface modification or development activity in areas documented by the Washington State Office of Archaeology and Historic Preservation to contain archaeological resources shall include a site inspection and a draft written report prepared by a qualified professional archaeologist, approved by the City, prior to the issuance of a permit. In addition, the archaeologist will provide copies of the draft report to the affected tribe(s) and the State Office of Archaeology and Historic Preservation (KZC Section 83.540). *Staff Comment: Gretchen Kaehler, Assistant State Archaeologist, Local Governments, Department of Archaeology and Historic Preservation (DAHP) confirmed that records don't show an archaeological site recorded in the area of the proposed work.*

b. Conclusion: The proposed development will be consistent with the SMP as long as the applicant incorporates the following measures into their proposal:

(1) Screen the west side of the structure and retaining wall from Lake Washington with native landscaping.

(2) All exterior lights should comply with direction and shielding, lighting levels and not illuminate the building façade to enhance architectural features.

(3) Provide sufficient area to allow parking for the operation and maintenance of the facility.

(4) Provide a landscape buffer around the parking area to the maximum extent possible.

2. Mitigation Sequencing KZC Section 83.360 requires an analysis for avoiding and minimizing impacts when locating, designing, constructing and operating a utility.

a. Facts:

(1) Mitigation Analysis – In order to assure that development activities contribute to meeting the no net loss provisions by avoiding, minimizing, and mitigating for adverse impacts to ecological functions or ecosystem-wide processes, an applicant required to complete a mitigation analysis pursuant to subsection (1) of this section shall utilize the following mitigation sequencing guidelines that appear in order of preference, during the design, construction and operation of the proposal:

a. Avoiding the impact altogether by not taking a certain action or parts of an action;

b. Minimizing impacts by limiting the degree or magnitude of the action and its implementation by using appropriate technology or by taking affirmative steps to avoid or reduce impacts;

c. Rectifying the impact by repairing, rehabilitating, or restoring the affected environment;

d. Reducing or eliminating the impact over time by preservation and maintenance operations;

e. Compensating for the impact by replacing, enhancing, or providing substitute resources or environments; and

f. Monitoring the impact and the compensation projects and taking appropriate corrective measures.

(2) Attachment 6 contains the applicant's responses to the mitigation analysis.

(3) Sewer lines have existed in this area since at least 1949. Sometime in the past a decision was made to locate a lift station in this area and pump effluent to the King County line located in Forbes Creek Valley.

(4) The 2008 Sewer Comprehensive Plan Update prepared by Roth Hill Engineering Partners states that:

"*The Rose Point Lift Station has a current pumping capacity of about 250 gpm (gallons per minute). Peak flows under current design conditions are approximately 620 gpm and are anticipated to increase to about 730 gpm under the 2027 scenario discussed earlier. Consequently, this station appears to be severely undersized. In fact, surcharging within the existing wet well has been observed during significant storm events. This surcharging can lead to overflows of the sewer system into Lake Washington or the basements of residential homes. Therefore, upgrading the pumping capacity or replacing the lift station with a larger lift station to accommodate the projected peak flows* is recommended."

(5) The proposed structure will be located approximately 160 feet east of Lake Washington ordinary high water line at the base of a slope and east of the driving surface.

(6) There are numerous utilities located within the r-o-w including water, sanitary and storm sewer.

(7) The existing lift station must stay in operation to convey sewage during construction of the new lift station.

(8) The applicant's analysis mentions that within the immediate vicinity noxious weeds will be removed. The proposed landscape plan only shows revegation with shrubs, groundcover and grasses. There is no proposal to replace the existing six maple trees that will be removed.

b. Conclusions:

(1) The proposed lift station is the minimum size necessary to replace the existing lift station while increasing capacity to serve the community.

(2) Updating the facility with a new lift station will reduce chances of a failure of the existing system. The proposed lift station is located as far away from Lake Washington as physically possible given existing development, location of right-of-way improvements, other utilities, and a steep slope located on the east side of the paved surface of the right-of-way.

(3) There are no feasible alternatives to this location due to the substantial amount of conveyance infrastructure already present in the area. There will be no in-water work, and the project will not impact any wetlands or streams.

(4) Restoration of the disturbed areas will happen and will include removal of invasive plants such as Himalayan blackberry and English ivy and replanting with native plants as required by the code. This should include trees, shrubs, and groundcover.

I. COMPREHENSIVE PLAN

1. Facts:

a. The Market Neighborhood Land Use Map found in the Comprehensive Plan map indicates that the property is designated as a LDR 1-3, low density residential use with a density of 1 to 3 units per acre (see Attachment 7).

b. Policy M-8.1: Provide potable water, sanitary sewers and surface water management facilities to new and existing development in accordance with the Water Comprehensive Plan, the Sanitary Sewer Comprehensive Plan, the Surface Water Master Plan, the Kirkland Municipal Code, and the adopted storm water design requirements.

c. Policy U-1.4: Ensure that utility services are provided in a manner that is environmentally sensitive, safe and aesthetically compatible with surrounding land uses.

d. Policy U-3.4: Correct deficiencies and increase system efficiency. Emphasis should be placed on correcting deficiencies that present sewage overflow risks.

2. Conclusion: The proposed development in consistent with the Comprehensive Plan. Replacement of the existing lift station will allow continued sanitary sewer service, reduce the risk of failure of the existing system, and should be designed to accommodate needs of future growth.

J. DEVELOPMENT STANDARDS

1. Fact: Additional comments and requirements placed on the project are found on the Development Standards, Attachment 3.

2. Conclusion: The applicant should follow the requirements set forth in Attachment 3.

III. SUBSEQUENT MODIFICATIONS

Modifications to the approval may be requested and reviewed pursuant to the applicable modification procedures and criteria in effect at the time of the requested modification.

IV. CHALLENGES AND JUDICIAL REVIEW

The following is a summary of the deadlines and procedures for challenges. Any person wishing to file or respond to a challenge should contact the Planning Department for further procedural information.

A. APPEAL TO CITY COUNCIL

Section 150.80 of the Zoning Code allows the Hearing Examiner's decision to be appealed by the applicant and any person who submitted written or oral testimony or comments to the Hearing Examiner. A party who signed a petition may not appeal unless such party also submitted independent written comments or information. The appeal must be in writing and must be delivered, along with any fees set by ordinance, to the Planning Department by 5:00 p.m., _____, twenty-one (21) calendar days following the postmarked date of distribution of the Hearing Examiner's decision on the application.

B. APPEAL TO SHORELINE HEARINGS BOARD

Pursuant to RCW 90.58.180 and WAC 173-27-220 any person aggrieved by the City's final decision on the Shoreline Substantial Development Permit may seek appeal to the State Shoreline Hearings Board by filing a petition for review. All petitions for review shall be filed with the Shoreline Hearings Board within 21 days of the date the applicant receives written notice from the Department of Ecology that the Department has received the City's decision. Within seven days of filing any petition for review with the Shoreline Hearings Board, the petitioner shall serve copies of the petition for review on the Department of Ecology, the State Attorney General and the City of Kirkland. The petition for review must contain items required by WAC 461-08-055.

C. JUDICIAL REVIEW

Section 150.130 of the Zoning Code allows the action of the City in granting or denying this zoning permit to be reviewed in King County Superior Court. The petition for review must be filed within 21 calendar days of the issuance of the final land use decision by the City.

V. LAPSE OF APPROVAL

Pursuant to RCW 90.58.200 and WAC 173-27-090, construction or substantial progress toward construction of a project for which a Substantial Development Permit has been granted pursuant

to the Shoreline Management Act must be undertaken within two (2) years after the date of approval. The project must be completed within five (5) years and a one (1) year extension may be considered.

"Date of approval" means the date of approval by the City of Kirkland, or the termination of review proceedings if such proceedings were initiated pursuant to RCW 90.58.180 and WAC 173-27-220.

VI. APPENDICES

Attachments 1 through 7 are attached.

1. Vicinity Map
2. Plans
3. Development Standards
4. Geotechnical Report dated August 28, 2015
5. Arborist Report dated March 26, 2016
6. Applicant's Compliance & Mitigation Analysis
7. Market Neighborhood Land Use Map

VII. PARTIES OF RECORD

Applicant: Brian Casey, Murray, Smith & Associates, 1145 Broadway, Suite 1010, Tacoma, WA 98402
Planning and Building Department
Department of Public Works: Aaron McDonald, Senior Project Engineer

A written recommendation will be issued by the Hearing Examiner within eight calendar days of the date of the open record hearing.

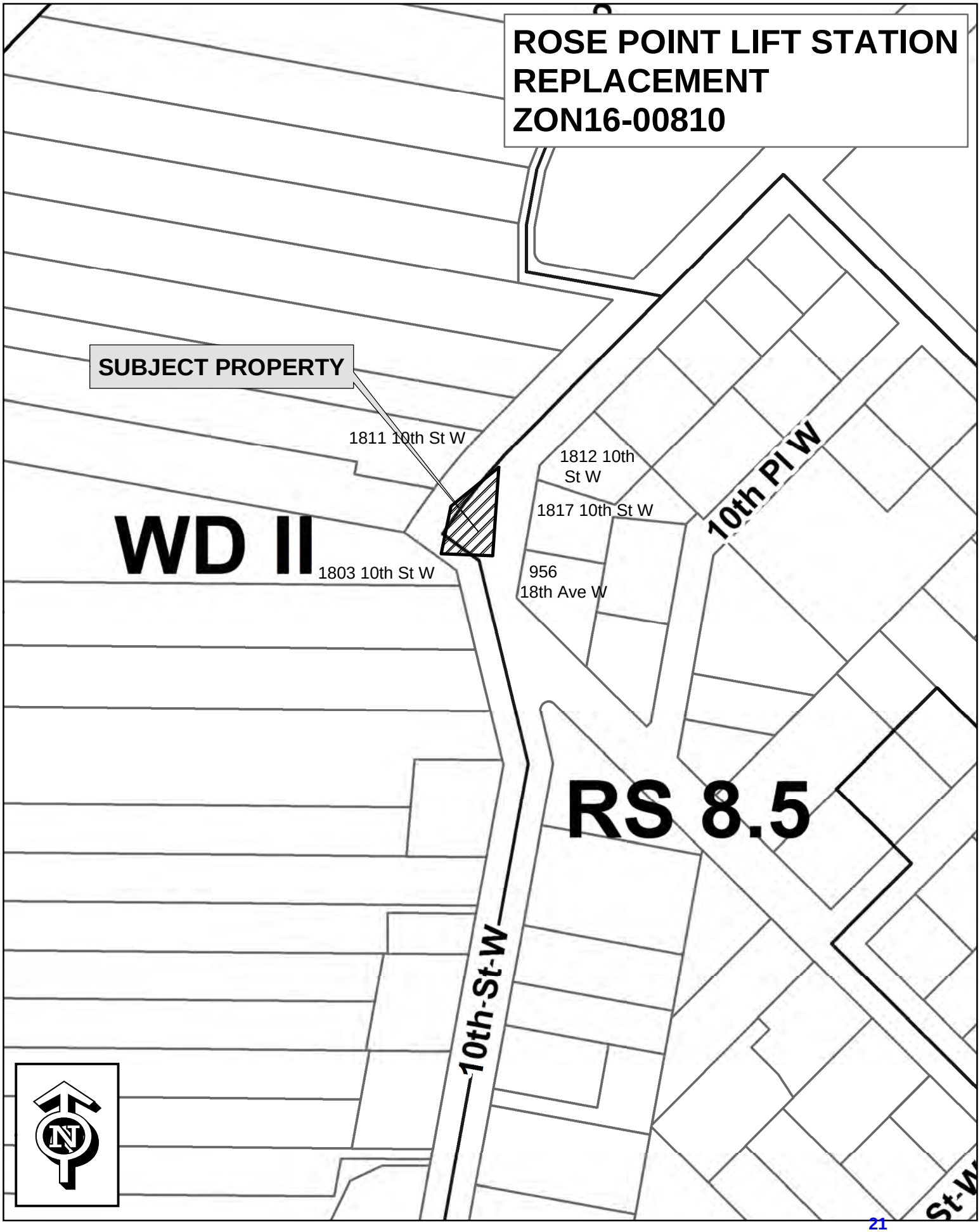
ROSE POINT LIFT STATION
REPLACEMENT
ZON16-00810
SUBJECT PROPERTY
1811 10th St W
1812 10th
St W
1817 10th St W
10th Pl W
WD II
1803 10th St W
956
18th Ave W
RS 8.5
10th St W
N

CITY OF KIRKLAND, WASHINGTON
ROSE POINT LIFT STATION IMPROVEMENTS

MARCH 2016

PERMIT REVIEW - NOT FOR CONSTRUCTION

INDEX OF DRAWINGS

GENERAL

1	G-1	COVER SHEET, LOCATION MAP AND INDEX OF DRAWINGS
2	G-2	SYMBOLS, LEGEND AND ABBREVIATIONS
3	G-3	CITY-APPROVED PLANS NOTES-1 AND DESIGN TABLE
4	G-4	CITY-APPROVED PLANS NOTES-2
5	G-5	CITY-APPROVED PLANS NOTES-3
6	G-6	EROSION CONTROL PLAN
7	G-7	EROSION CONTROL NOTES
8	G-8	EROSION CONTROL DETAILS
9	G-9	TEMPORARY BY-PASSING PLAN AND NOTES
10	G-10	TRAFFIC CONTROL PLAN AND HAUL ROUTE

CIVIL

11	C-1	EXISTING SITE SURVEY CONTROL AND DEMOLITION PLAN
12	C-2	SITE PLAN
13	C-3	GRADING AND DRAINAGE PLAN
14	C-4	SITE PIPING PLAN
15	C-5	SITE PIPING PROFILES
16	C-6	SITE RESTORATION PLAN
17	C-7	GENERAL CIVIL SITE DETAILS
18	C-8	GENERAL CIVIL YARD PIPING DETAILSA18:C21

ARCHITECTURAL

19	A-1	ARCHITECTURAL GENERAL NOTES, FLOOR PLAN, DOOR AND FINISH SCHEDULES
20	A-2	ARCHITECTURAL ELEVATIONS
21	A-3	WALL SECTIONS AND DETAILS
22	A-4	ARCHITECTURAL DETAILS

STRUCTURAL

23	S-1	BUILDING AND WALL PLAN
24	S-2	STRUCTURAL SECTIONS AND DETAILS
25	S-3	CONTROL BUILDING FOUNDATION AND ROOFING PLANS
26	S-4	CONTROL BUILDING SECTIONS AND DETAILS
27	S-5	GENERAL STRUCTURAL DETAILS

MECHANICAL

28	M-1	PUMP STATION MECHANICAL PLAN AND SECTIONS
29	M-2	PUMP STATION GENERATOR AND HVAC
30	M-3	MECHANICAL DETAILS 1
31	M-4	MECHANICAL DETAILS 2

ELECTRICAL

32	E-1	ELECTRICAL SYMBOLS AND LEGEND
33	E-2	ELECTRICAL SITE PLAN
34	E-3	CONTROL BUILDING POWER, CONTROL AND LIGHTING PLAN
35	E-4	ONE-LINE DIAGRAM
36	E-5	STATION PLAN AND SECTIONS
37	E-6	POWER AND CONTROL PANEL SECTIONS
38	E-7	POWER AND CONTROL PANEL WIRING DIAGRAMS AND SCHEMATICS
39	E-8	ELECTRICAL DETAILS

LANDSCAPING

40	L-1	LANDSCAPING PLAN
41	L-2	LANDSCAPING DETAILS AND NOTES

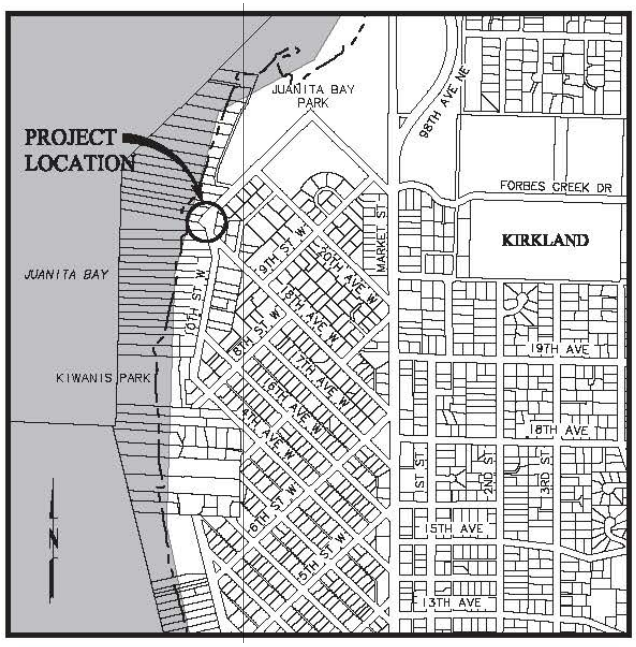

LOCATION MAP
SCALE: 1"=500'

Murray, Smith & Associates, Inc.
Engineers/Planners
2707 Colby Avenue, Suite 1110 PHONE 425.252.9003
Everett, Washington 98201-3566 FAX 425.252.8053

811 Know what's below. Call before you dig.

15-1680.203

K:\TAC_Projects\15\1680 Rose Point Lift Station Upgrade\CAD\Sheets\15-1680-WA-G.dwg G-1 3/22/2016 9:06 AM BRETT.WILLIAMS 20.0s (LMS Tech)

Attachment 2
~~ZON18-00010~~

ABBREVIATIONS

ABAND	ABANDONED
AC	ASPHALTIC CONCRETE
AL	ALUMINUM
ATB	ASPHALT TREATED BASE
AVE	AVENUE
AWWA	AMERICAN WATER WORKS ASSOCIATION
BLDG	BUILDING
BMP	BEST MANAGEMENT PRACTICES
BTM	BOTTOM
C	CENTERLINE
CARV	COMBINATION AIR RELEASE VALVE
CB	CATCH BASIN
CDF	CONTROLLED DENSITY FILL
CL	CLASS
CLR	CLEARANCE
CMP	CORRUGATED METAL PIPE
COORD	COORDINATE
CONC	CONCRETE
CPLG	COUPLING
CSBC	CRUSHED SURFACING BASE COURSE
CSTC	CRUSHED SURFACING TOP COURSE
CY	CUBIC YARD
DET	DETAIL
DI	DUCTILE IRON
DIA	DIAMETER
DOE	DEPARTMENT OF ECOLOGY
DR	DRIVEWAY
DWG	DRAWING
E	EAST
EA	EACH
EL	ELEVATION
EQ	EQUAL
EX	EXISTING
EXIST	EXISTING
FL	FLOW LINE
FLG	FLANGE
FM	FORCE MAIN
FT	FEET
G	GAS
GALV	GALVANIZED
GEN	GENERAL
HMA	HOT MIX ASPHALT
HORIZ	HORIZONTAL(LY)
HW	HEADWALL
ID	INSIDE DIAMETER
IE	INVERT ELEVATION
INSTL	INSTALL
INV	INVERT
L	LENGTH
LF	LINEAR FOOT
LT	LEFT
LTF	LENGTH TO FIT
MFR	MANUFACTURER
MH	MANHOLE
MJ	MECHANICAL JOINT
MIN	MINIMUM
MUTCD	MANUAL ON UNIFORM TRAFFIC CONTROL DEVICES
N	NORTH
NE	NORTHEAST
NIC	NOT IN CONTRACT
NOM	NOMINAL
NTS	NOT TO SCALE
OC	ON CENTER
OD	OUTSIDE DIAMETER
OHWM	ORDINARY HIGH WATER MARK
PCCP	PORTLAND CEMENT CONCRETE PVMT
PVMT	PAVEMENT
PH	POTHOLE
PL	PLASTIC
PSF	POUNDS PER SQUARE FOOT
PVC	POLYVINYL CHLORIDE
PWR	POWER
RESTR	RESTRAIN(ED)
RJ	RESTRAINED JOINT PIPE
RT	RIGHT
R/W	RIGHT OF WAY
S	SOUTH
SCHED	SCHEDULE
SD	STORM DRAIN
SDMH	STORM MANHOLE
SERV	SERVICE
SHT(S)	SHEET(S)
SL	SLOPE
SPECS	SPECIFICATIONS
SQ	SQUARE
SS	SANITARY SEWER
SSCO	SANITARY SEWER CLEANOUT
SSMH	SANITARY SEWER MANHOLE
ST	STREET
STA	STATION
STD	STANDARD
STL	STEEL
S/W	SIDEWALK
T, TEL	TELEPHONE
TB	THRUST BLOCK
TEMP	TEMPORARY
TESC	TEMPORARY EROSION AND SEDIMENT CONTROL
TRANS	TRANSITION
TYP	TYPICAL
VERT	VERTICAL(LY)
UGP	UNDERGROUND POWER LINE
W	WATER, WEST
WSDOT	WASHINGTON STATE DEPARTMENT OF TRANSPORTATION
WV	WATER VALVE
WW	WINGWALL

SECTION AND DETAIL DESIGNATIONS

SECTION DESIGNATIONS

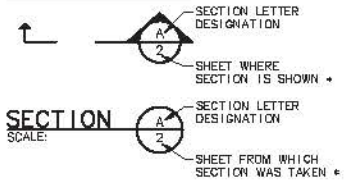

DETAIL DESIGNATION

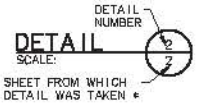

* NOTE: IF PLAN AND SECTION FOR DETAIL CALL-OUT AND DETAIL ARE SHOWN ON THE SAME DRAWING, DRAWING NUMBER IS REPLACED WITH A DASH.

PIPE SYMBOLS

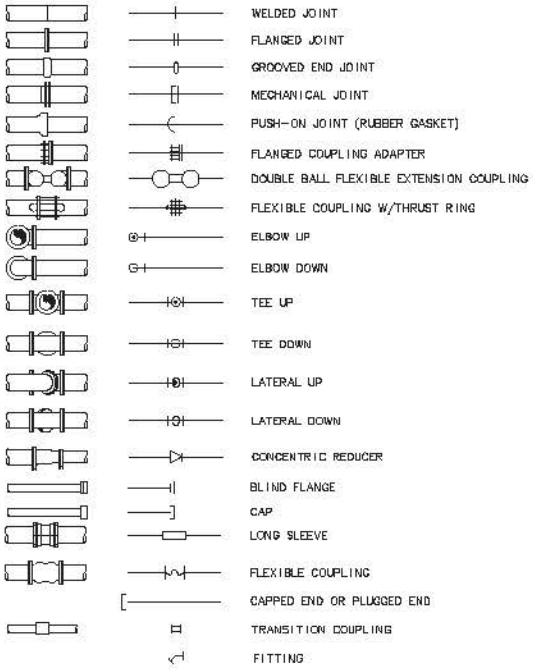

VALVE SYMBOLS

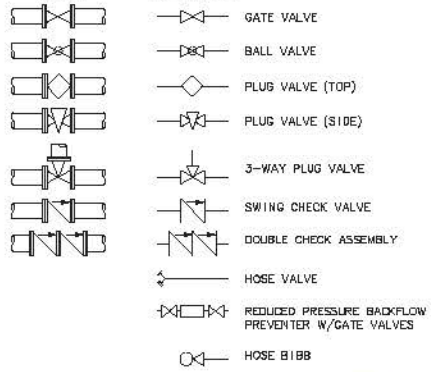

LEGEND

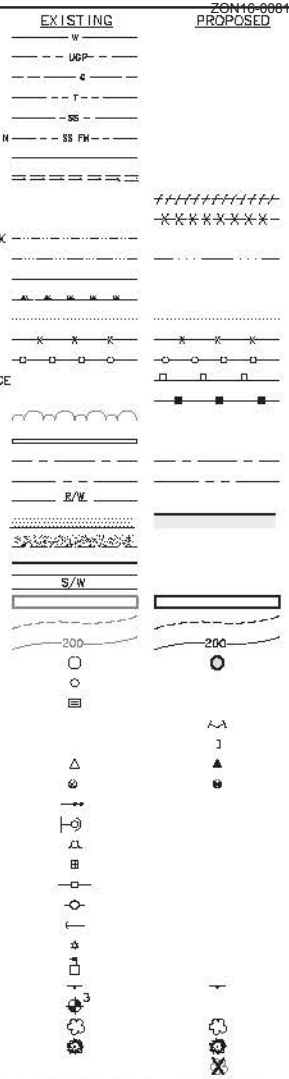

PERMIT REVIEW - NOT FOR CONSTRUCTION

NO.	DATE	BY	REVISION

NOTICE
0 ½ 1
IF THIS BAR DOES NOT MEASURE 1" THEN DRAWING IS NOT TO SCALE

JTS DESIGNED
DKH/BAW DRAWN
BMC CHECKED

PROFESSIONAL ENGINEER STATE OF WASHINGTON MARCH 2018

MSA Murray, Smith & Associates, Inc. Engineers/Planners
2707 Colby Avenue, Suite 1110 Everett, Washington 98201-3568 PHONE 425.252.9003 FAX 425.252.9065

CITY OF KIRKLAND WASHINGTON

CITY OF KIRKLAND, WASHINGTON ROSE POINT LIFT STATION IMPROVEMENTS

SYMBOLS, LEGEND AND ABBREVIATIONS

PROJECT NO.: 15-1880.203 | SCALE: AS SHOWN | DATE: MARCH 2018

SHEET G-2
2 of X

K:\TAC_Projects\15\1680 Rose Point Lift Station Upgrade\CAD\Sheets\15-1880-WA-G.dwg G-2 3/22/2018 9:06 AM BRETT.WILLIAMS 20.0s (LMS Tech)

GENERAL NOTES:

1. A PRE-CONSTRUCTION CONFERENCE SHALL BE HELD PRIOR TO THE START OF CONSTRUCTION. THE CONTRACTOR SHALL BE RESPONSIBLE FOR SECURING ALL NECESSARY PERMITS PRIOR TO CONSTRUCTION.

2. ALL CONSTRUCTION AND MATERIALS SHALL CONFORM TO CITY OF KIRKLAND DEPARTMENT OF PUBLIC WORKS AND CURRENT WSDOT/APWA STANDARDS AND SPECIFICATIONS FOR ROAD, BRIDGE, AND MUNICIPAL CONSTRUCTION.

3. APPROXIMATE LOCATIONS OF EXISTING UTILITIES HAVE BEEN OBTAINED FROM AVAILABLE RECORDS AND ARE SHOWN FOR CONVENIENCE. THE CONTRACTOR SHALL BE RESPONSIBLE FOR VERIFICATION OF THE LOCATIONS SHOWN AND FOR DISCOVERY OF POSSIBLE ADDITIONAL UTILITIES NOT SHOWN SO AS TO AVOID DAMAGE OR DISTURBANCE. THE UNDERGROUND UTILITY LOCATION SERVICE SHALL BE CONTACTED FOR FIELD LOCATION PRIOR TO ANY CONSTRUCTION. THE OWNER OR HIS REPRESENTATIVE SHALL BE CONTACTED IF A UTILITY CONFLICT EXISTS. FOR UTILITY LOCATION IN KING COUNTY, CALL 1-800-424-5555. THE CONTRACTOR IS RESPONSIBLE TO ENSURE THAT UTILITY LOCATES ARE MAINTAINED THROUGHOUT THE LIFE OF THE PROJECT.

4. IT SHALL BE THE CONTRACTOR'S RESPONSIBILITY TO COORDINATE HIS ACTIVITIES WITH LOCAL UTILITY COMPANIES TO ENSURE THAT ALL UTILITIES ARE INSTALLED ACCORDING TO THESE PLANS AND THE REQUIREMENTS OF THE INDIVIDUAL UTILITY COMPANIES.

5. ALL MANHOLES SHALL CONFORM TO WSDOT/APWA STANDARDS, ECCENTRIC CONES WITH MANUFACTURER-APPROVED GASKETS AND 1/2" POLYPROPYLENE-ENCAPSULATED SAFETY STEPS AND LADDERS. ALL MANHOLES SHALL HAVE CAST IRON RINGS AND DUCTILE IRON COVERS. LIDS SHALL HAVE 2" RAISED LETTERS MARKED "SEWER." ALL CLEANOUTS SHALL HAVE CAST IRON RINGS AND COVERS MARKED "CO" THAT ARE IN PAVED AREAS.

6. ALL SIDE SEWERS SHALL BE TESTED FOR ACCEPTANCE AT THE SAME TIME THE MAIN SEWER IS TESTED. SIDE SEWER LOCATIONS SHALL BE VERIFIED IN THE FIELD PRIOR TO CONSTRUCTION AND BACKFILLING. ALL SIDE SEWERS SHALL BE CAPPED WITH A WATERTIGHT PLUG, HAVE A CLEANOUT AND TEST TEE INSTALLED, AND SHALL BE MARKED FOR LOCATION WITH A 2" X 4" STAKE PAINTED WHITE, MARKED SEWER, WITH 3' EXPOSED, AND THE DEPTH OF THE CAP WRITTEN ON THE STAKE. SEE STANDARD DETAIL S.1B. THE STAKE SHALL BE SECURED TO THE END OF THE PLUG WITH WIRE A MINIMUM OF 16 GAUGE. INITIAL SIDE SEWER INSTALLATION SHALL RUN TO THE PROPERTY LINE. THE REMAINING SIDE SEWER SHALL NOT BE INSTALLED UNTIL TESTING AND ACCEPTANCE OF THE SEWER TRUNK LINE BY THE CITY OF KIRKLAND IS COMPLETED. NUMBER AND LOCATION OF SIDE SEWERS SHOWN ARE APPROXIMATE ONLY AND MAY BE CHANGED AS REQUIRED DURING CONSTRUCTION. CONTRACTOR SHALL NOTIFY ENGINEER WHEN EXACT LOCATIONS ARE DETERMINED AND PROVIDE THE ENGINEER AND THE CITY OF KIRKLAND DEPARTMENT OF PUBLIC WORKS WITH AN AS-BUILT. IF APPROVED BY THE PUBLIC WORKS DEPARTMENT, ALL DOUBLE-SIDED SEWER WYES MUST BE AT THE PROPERTY LINE.

7. ALL MAIN-LINE TRENCHES SHALL BE COMPACTED PRIOR TO TESTING SEWER LINES FOR ACCEPTANCE.

8. PRESSURE TESTING OF GRAVITY SEWER MAINS SHALL CONFORM TO THE FOLLOWING STANDARDS: (1) AIR TESTING WILL REQUIRE A MINIMUM OF 4 PSI FOR 15 MINUTES WITH NO PRESSURE DROP; (2) WATER TESTING WILL REQUIRE A MINIMUM OF 10' OF HEAD IN A STANDPIPE AT THE TEST LOCATION FOR 15 MINUTES WITH NO DROP IN THE WATER LEVEL IN THE STANDPIPE. EITHER TEST IS ACCEPTABLE. SANITARY SEWER - PLAN NOTES (CONTINUED) 2.

9. PRESSURE TESTING OF FORCE MAINS AND LATERALS WILL REQUIRE AN AIR TEST OF 25 PSI MINIMUM FOR 15 MINUTES WITH NO PRESSURE DROP.

10. NEW CONNECTIONS TO EXISTING MANHOLES OR SEWER LINES SHALL BE SEALED OFF UNTIL UPSTREAM CONSTRUCTION IS FINISHED, TESTED, CLEANED, AND ACCEPTED. ALL CONSTRUCTION DEBRIS AND WATER SHALL BE REMOVED PRIOR TO OPENING THE SEAL.

11. ALL PVC SEWER PIPE AND FITTINGS SHALL MEET THE REQUIREMENTS OF ASTM SPECIFICATIONS D-3034 FOR 4" TO 15" DIAMETER AND ASTM F679 FOR 18" TO 27" DIAMETER. PIPE SHALL BE SDR-35 AND SHALL CONFORM TO STANDARD SPECIFICATIONS. BEDDING AND BACKFILL SHALL MEET WSDOT AND APWA SPECIFICATIONS.

12. MINIMUM SLOPE FOR SIDE SEWERS SHALL BE TWO PERCENT (2%).

13. AN APPROVED COPY OF THE SEWER PLAN MUST BE ON SITE WHENEVER CONSTRUCTION IS IN PROGRESS.

14. PRIOR TO CONSTRUCTION OF SEWER LINES, THE NECESSARY LOT CORNERS MUST BE SET, AND THE CONTRACTOR SHALL BE RESPONSIBLE FOR THE VERIFICATION OF THE LOCATION OF PIPES, MANHOLES, AND INVERT ELEVATIONS.

15. PIPE ANCHORS, IF USED, SHALL BE INSTALLED: NOT OVER 36' CENTER TO CENTER ON GRADES FROM 20 PERCENT TO 35 PERCENT; NOT OVER 24' CENTER TO CENTER ON GRADES FROM 35 PERCENT TO 50 PERCENT; AND NOT OVER 16' CENTER TO CENTER ON GRADES 50 PERCENT AND GREATER.

16. ALL MANHOLES SHALL HAVE A MINIMUM OF 0.10' TO A MAXIMUM OF 1.00' DROP BETWEEN INVERT IN AND INVERT OUT.

17. PVC SEWER PIPE SHALL BE TESTED FOR DEFLECTION ACCORDING TO WSDOT/APWA SPECIFICATIONS.

18. ALL TRENCH BACKFILL SHALL BE COMPACTED TO 95 PERCENT DENSITY IN ROADWAYS, ROADWAY SHOULDERS, ROADWAY PRISM AND DRIVEWAYS, AND 85 PERCENT DENSITY IN UNPAVED AREAS. ALL PIPE ZONE COMPACTION SHALL BE 95 PERCENT.

19. IT SHALL BE THE RESPONSIBILITY OF THE CONTRACTOR TO ADJUST ALL MANHOLE LIDS AND CLEANOUT LIDS TO MATCH FINAL ASPHALT ELEVATIONS IN ROADWAYS OR GROUND ELEVATIONS IN LANDSCAPED AREAS.

20. WHEN TYING INTO EXISTING MANHOLES THAT ARE BELOW MINIMUM STANDARDS, THE EXISTING MANHOLE MUST BE UPGRADED TO MEET CURRENT STANDARDS.

21. ALL NEW SEWER MAIN EXTENSIONS SHALL BE VIDEOED PRIOR TO FINAL ACCEPTANCE.

PUMP STATION	
	PROPOSED
LOCATION	1805 10TH ST W
PUMP STATION TYPE	SUBMERSIBLE
PUMP TYPE	(2) CONSTANT SPEED SUBMERSIBLE
PUMP CAPACITY (PER PUMP)	300 GPM
MAXIMUM PUMP STARTS PER HOUR	10
MOTOR HORSEPOWER, HP	15
WET WELL LEVEL CONTROL TYPE	ULTRASONIC
WET WELL OPERATING VOLUME, PUMPS OFF TO LEAD PUMP ON	450 GALLONS
OVERFLOW POINT/OVERFLOW DISCHARGE ELEVATIONS	TBD/20.5'
DESIGN PEAK HOURLY INFLUENT FLOW	92 GPM
AUXILIARY POWER TYPE	STATIONARY DIESEL GENERATOR
AUXILIARY POWER LOCATION	CONTROL BUILDING
AUXILIARY POWER OUTPUT	40 KW
AUXILIARY POWER FUEL TANK CAPACITY	24 HOURS
AUXILIARY POWER TRANSFER SWITCH	AUTOMATIC
ALARM TELEMETRY TYPE	YOKOGAWA
EPA RELIABILITY CLASS	CLASS I
FORCE MAIN	
	PROPOSED
TYPE AND LENGTH	1,770 FT OF 6" DI
PROFILE DESCRIPTION	GENERAL ASCENDING
DISCHARGE MANHOLE LOCATION	MARKET ST AND FORBES CREEK DR
AIR & VACUUM RELEASE VALVES	N/A
AVERAGE DETENTION TIME (FORCE MAIN)	XXX MINUTES @ XXX GPM DESIGN ADWF

PERMIT REVIEW - NOT FOR CONSTRUCTION

NO.	DATE	BY	REVISION

NOTICE
0 ½ 1
IF THIS BAR DOES NOT MEASURE 1" THEN DRAWING IS NOT TO SCALE

JTS DESIGNED
DKH/BAW DRAWN
BMC CHECKED

PROFESSIONALLY ENGINEERED PLAN SET MARCH 2018

Murray, Smith & Associates, Inc.
Engineers/Planners
2707 Colby Avenue, Suite 1110 PHONE 425.252.9003
Everett, Washington 98201-3568 FAX 425.252.9065

CITY OF KIRKLAND WASHINGTON

CITY OF KIRKLAND, WASHINGTON
ROSE POINT LIFT STATION IMPROVEMENTS

CITY APPROVED PLANS NOTES - 1 AND DESIGN TABLE

PROJECT NO.: 15-1880.203 | SCALE: AS SHOWN | DATE: MARCH 2018

SHEET G-3
3 of X

K:\TAC_Projects\15\1680 Rose Point Lift Station Upgrade\CAD\Sheets\15-1880-WA-G.dwg G-3 3/22/2018 9:06 AM BRETT.WILLIAMS 20.0s (LMS Tech)

Attachment 2
ZON16-00810

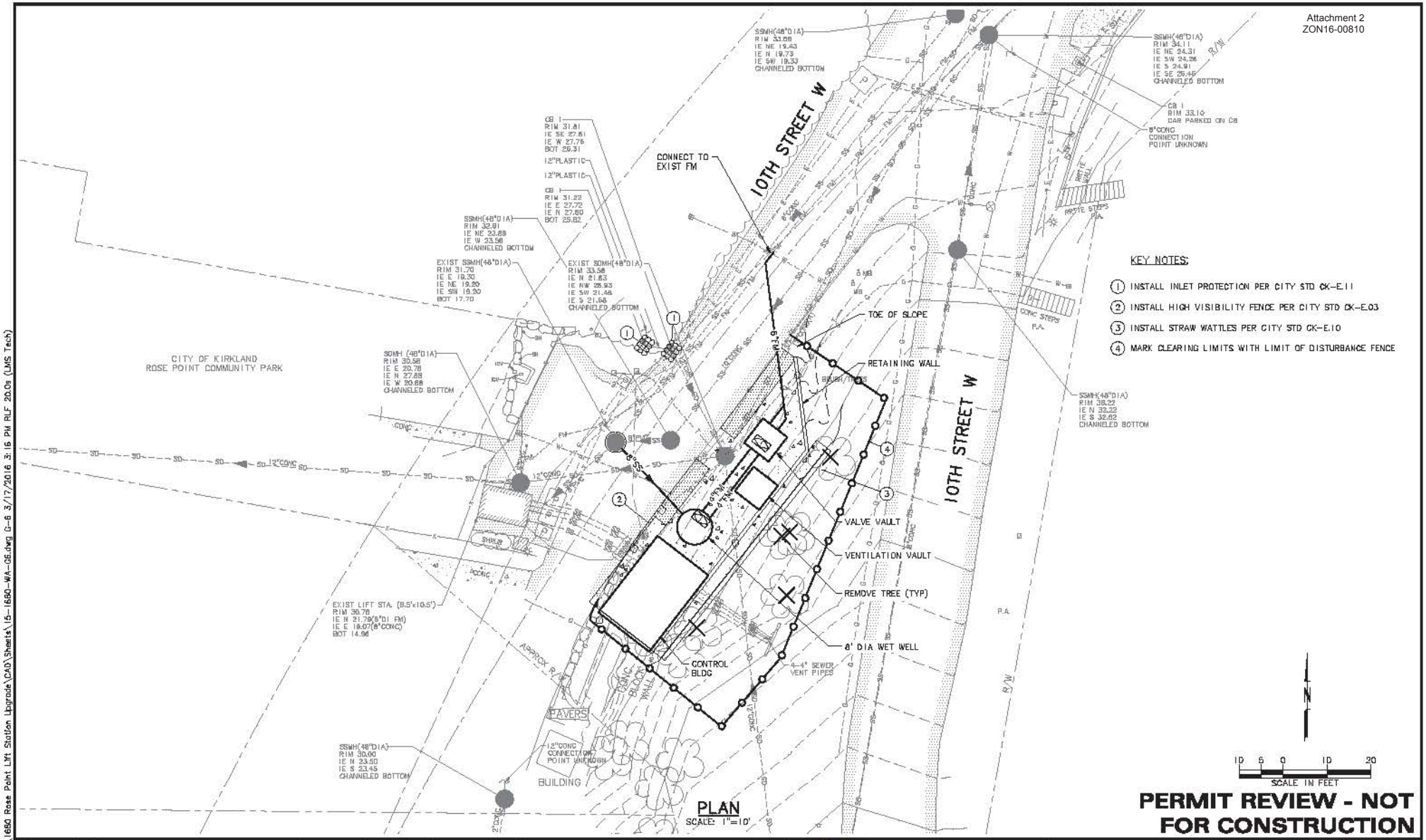

PERMIT REVIEW - NOT FOR CONSTRUCTION

NO.	DATE	BY	REVISION

NOTICE: IF THIS BAR DOES NOT MEASURE 1" THEN DRAWING IS NOT TO SCALE

BMC DESIGNED | HGM/BAW DRAWN | BMC CHECKED

Murray, Smith & Associates, Inc. Engineers/Planners
2707 Colby Avenue, Suite 1110 Everett, Washington 98201-3566 PHONE 425.252.9072 FAX 425.252.9593

CITY OF KIRKLAND, WASHINGTON
ROSE POINT LIFT STATION IMPROVEMENTS

EROSION CONTROL PLAN

PROJECT NO.: 15-1680.203 | SCALE: AS SHOWN | DATE: MARCH 2016

SHEET G-6 X of X

K:\TAC_Projects\15\1680 Rose Point Lift Station Upgrade\CAD\Sheets\15-1680-WA-06.dwg G-6 3/17/2016 3:16 PM RLF 20.0s (LMS Tech)

Attachment 2
ZON16-00810

EROSION CONTROL NOTES

1. THE APPROVED CONSTRUCTION SEQUENCE SHALL BE AS FOLLOWS:
   A. CONDUCT PRE-CONSTRUCTION MEETING.
   B. FLAG OR FENCE CLEARING LIMITS.
   C. POST SIGN WITH NAME AND PHONE NUMBER OF TESC SUPERVISOR.
   D. INSTALL CATCH BASIN PROTECTION IF REQUIRED.
   E. GRADE AND INSTALL CONSTRUCTION ENTRANCE(S).
   F. INSTALL PERIMETER PROTECTION (SILT FENCE, BRUSH BARRIER, ETC.).
   G. CONSTRUCT SEDIMENT PONDS AND TRAPS.
   H. GRADE AND STABILIZE CONSTRUCTION ROADS.
   I. CONSTRUCT SURFACE WATER CONTROLS (INTERCEPTOR DIKES, PIPE SLOPE DRAINS, ETC.) SIMULTANEOUSLY WITH CLEARING AND GRADING FOR PROJECT DEVELOPMENT.
   J. MAINTAIN EROSION CONTROL MEASURE IN ACCORDANCE WITH CITY OF KIRKLAND STANDARDS AND MANUFACTURER'S RECOMMENDATIONS.
   K. RELOCATE EROSION CONTROL MEASURES OR INSTALL NEW MEASURES SO THAT AS SITE CONDITIONS CHANGE, THE EROSION AND SEDIMENT CONTROL IS ALWAYS IN ACCORDANCE WITH THE CITY TESC MINIMUM REQUIREMENTS.
   L. COVER ALL AREAS WITHIN THE SPECIFIED TIME FRAME WITH STRAW, WOOD FIBER MULCH, COMPOST, PLASTIC SHEETING, CRUSHED ROCK OR EQUIVALENT.
   M. STABILIZE ALL AREAS THAT REACH FINAL GRADE WITHIN 7 DAYS.
   N. SEED OR SOD ANY AREAS TO REMAIN UNWORKED FOR MORE THAN 30 DAYS.
   O. UPON COMPLETION OF THE PROJECT, ALL DISTURBED AREAS MUST BE STABILIZED AND BEST MANAGEMENT PRACTICES REMOVED IF APPROPRIATE.

2. ALL WORK AND MATERIALS SHALL BE IN ACCORDANCE WITH CITY OF KIRKLAND STANDARDS AND SPECIFICATIONS.

3. THE BOUNDARIES OF THE CLEARING LIMITS SHOWN ON THIS PLAN SHALL BE SET BY SURVEY AND CLEARLY FLAGGED IN THE FIELD BY A CLEARING CONTROL FENCE PRIOR TO CONSTRUCTION. DURING THE CONSTRUCTION PERIOD, NO DISTURBANCE OR REMOVAL OF ANY GROUND COVER BEYOND THE FLAGGED CLEARING LIMITS SHALL BE PERMITTED. THE FLAGGING SHALL BE MAINTAINED BY THE PERMITTEE/CONTRACTOR FOR THE DURATION OF CONSTRUCTION.

4. APPROVAL OF THIS EROSION/SEDIMENTATION CONTROL (ESC) PLAN DOES NOT CONSTITUTE AN APPROVAL OF PERMANENT ROAD OR DRAINAGE DESIGN (E.G., SIZE AND LOCATION OF ROADS, PIPES, RESTRICTORS, CHANNELS, RETENTION FACILITIES, UTILITIES, ETC.).

5. THE IMPLEMENTATION OF THIS ESC PLAN AND THE CONSTRUCTION, MAINTENANCE, REPLACEMENT, AND UPGRADING OF THESE ESC FACILITIES IS THE RESPONSIBILITY OF THE PERMITTEE/CONTRACTOR UNTIL ALL CONSTRUCTION IS APPROVED.

6. A COPY OF THE APPROVED ESC PLANS MUST BE ON THE JOB SITE WHENEVER CONSTRUCTION IS IN PROGRESS.

7. THE ESC FACILITIES SHOWN ON THIS PLAN MUST BE CONSTRUCTED PRIOR TO OR IN CONJUNCTION WITH ALL CLEARING AND GRADING ACTIVITIES IN SUCH A MANNER AS TO ENSURE THAT SEDIMENT-LADEN WATER DOES NOT ENTER THE DRAINAGE SYSTEM OR VIOLATE APPLICABLE WATER STANDARDS. WHEREVER POSSIBLE, MAINTAIN NATURAL VEGETATION FOR SILT CONTROL. I LAST REVISED 01/2015 EROSION – PLAN NOTES (CONTINUED)

8. THE ESC FACILITIES SHALL BE CONSTRUCTED IN ACCORDANCE WITH THE DETAILS ON THE APPROVED PLANS. LOCATIONS MAY BE MOVED TO SUIT FIELD CONDITIONS, SUBJECT TO APPROVAL BY THE ENGINEER AND THE CITY OF KIRKLAND INSPECTOR.

9. THE ESC FACILITIES SHOWN ON THIS PLAN ARE THE MINIMUM REQUIREMENTS FOR ANTICIPATED SITE CONDITIONS. DURING THE CONSTRUCTION PERIOD, THESE ESC FACILITIES SHALL BE UPGRADED (E.G., ADDITIONAL SUMPS, RELOCATION OF DITCHES AND SILT FENCES, ETC.) AS NEEDED FOR UNEXPECTED STORM EVENTS. ADDITIONALLY, MORE ESC FACILITIES MAY BE REQUIRED TO ENSURE COMPLETE SILTATION CONTROL. THEREFORE, DURING THE COURSE OF CONSTRUCTION IT SHALL BE THE OBLIGATION AND RESPONSIBILITY OF THE CONTRACTOR TO ADDRESS ANY NEW CONDITIONS THAT MAY BE CREATED BY HIS ACTIVITIES AND TO PROVIDE ADDITIONAL FACILITIES OVER AND ABOVE THE MINIMUM REQUIREMENTS AS MAY BE NEEDED.

10. THE ESC FACILITIES SHALL BE INSPECTED BY THE PERMITTEE/CONTRACTOR DAILY DURING NON-RAINFALL PERIODS, EVERY HOUR (DAYLIGHT) DURING A RAINFALL EVENT, AND AT THE END OF EVERY RAINFALL, AND MAINTAINED AS NECESSARY TO ENSURE THEIR CONTINUED FUNCTIONING. IN ADDITION, TEMPORARY SILTATION PONDS AND ALL TEMPORARY SILTATION CONTROLS SHALL BE MAINTAINED IN A SATISFACTORY CONDITION UNTIL SUCH TIME THAT CLEARING AND/OR CONSTRUCTION IS COMPLETED, PERMANENT DRAINAGE FACILITIES ARE OPERATIONAL, AND THE POTENTIAL FOR EROSION HAS PASSED. WRITTEN RECORDS SHALL BE KEPT DOCUMENTING THE REVIEWS OF THE ESC FACILITIES.

11. THE ESC FACILITIES ON INACTIVE SITES SHALL BE INSPECTED AND MAINTAINED A MINIMUM OF ONCE A MONTH OR WITHIN 48 HOURS FOLLOWING A STORM EVENT.

12. STABILIZED CONSTRUCTION ENTRANCES SHALL BE INSTALLED AT THE BEGINNING OF CONSTRUCTION AND MAINTAINED FOR THE DURATION OF THE PROJECT. ADDITIONAL MEASURES, SUCH AS WASH PADS, MAY BE REQUIRED TO ENSURE THAT ALL PAVED AREAS ARE KEPT CLEAN FOR THE DURATION OF THE PROJECT.

13. ALL DENUDED SOILS MUST BE STABILIZED WITH AN APPROVED TESC METHOD (E.G. SEEDING, MULCHING, PLASTIC COVERING, CRUSHED ROCK) WITHIN THE FOLLOWING TIMELINES: MAY 1 TO SEPTEMBER 30 – SOILS MUST BE STABILIZED WITHIN 7 DAYS OF GRADING. OCTOBER 1 TO APRIL 30 – SOILS MUST BE STABILIZED WITHIN 2 DAYS OF GRADING. STABILIZE SOILS AT THE END OF THE WORKDAY PRIOR TO A WEEKEND, HOLIDAY, OR PREDICTED RAIN EVENT.

14. WHERE SEEDING FOR TEMPORARY EROSION CONTROL IS REQUIRED, FAST GERMINATING GRASSES SHALL BE APPLIED AT AN APPROPRIATE RATE (EXAMPLE: ANNUAL OR PERENNIAL RYE APPLIED AT APPROXIMATELY 80 POUNDS PER ACRE).

15. WHERE STRAW MULCH IS REQUIRED FOR TEMPORARY EROSION CONTROL, IT SHALL BE APPLIED AT A MINIMUM THICKNESS OF 2".

16. ALL LOTS ADJOINING OR HAVING ANY NATIVE GROWTH PROTECTION EASEMENTS (NGPE) SHALL HAVE A 6' HIGH TEMPORARY CONSTRUCTION FENCE (CHAIN LINK WITH PIER BLOCKS) SEPARATING THE LOT (OR BUILDABLE PORTIONS OF THE LOT) FROM THE AREA RESTRICTED BY THE NGPE AND SHALL BE INSTALLED PRIOR TO ANY GRADING OR CLEARING AND REMAIN IN PLACE UNTIL THE PLANNING DEPARTMENT AUTHORIZES REMOVAL. 2 EROSION – PLAN NOTES (CONTINUED)

17. CLEARING LIMITS SHALL BE DELINEATED WITH A CLEARING CONTROL FENCE. THE CLEARING CONTROL FENCE SHALL CONSIST OF A 6-FT. HIGH CHAIN LINK FENCE ADJACENT THE DRIP LINE OF TREES TO BE SAVED, WETLAND OR STREAM BUFFERS, AND SENSITIVE SLOPES. CLEARING CONTROL FENCES ALONG WETLAND OR STREAM BUFFERS OR UPSLOPE OF SENSITIVE SLOPES SHALL BE ACCOMPANIED BY AN EROSION CONTROL FENCE. IF APPROVED BY THE CITY, A FOUR-FOOT HIGH ORANGE MESH CLEARING CONTROL FENCE MAY BE USED TO DELINEATE CLEARING LIMITS IN ALL OTHER AREAS.

18. OFF-SITE STREETS MUST BE KEPT CLEAN AT ALL TIMES. IF DIRT IS DEPOSITED ON THE PUBLIC STREET SYSTEM, THE STREET SHALL BE IMMEDIATELY CLEANED WITH POWER SWEEPER OR OTHER EQUIPMENT. ALL VEHICLES SHALL LEAVE THE SITE BY WAY OF THE CONSTRUCTION ENTRANCE AND SHALL BE CLEANED OF ALL DIRT THAT WOULD BE DEPOSITED ON THE PUBLIC STREETS.

19. ROCK FOR EROSION PROTECTION OF ROADWAY DITCHES, WHERE REQUIRED, MUST BE OF SOUND QUARRY ROCK, PLACED TO A DEPTH OF 1' AND MUST MEET THE FOLLOWING SPECIFICATIONS: 4"-8" ROCK/40%-70% PASSING; 2"-4" ROCK/30%-40% PASSING; AND 1"-2" ROCK/10%-20% PASSING. RECYCLED CONCRETE SHALL NOT BE USED FOR CONSTRUCTION ENTRANCE OR TEMPORARY STABILIZATION ELSEWHERE ON THE SITE.

20. IF ANY PART(S) OF THE CLEARING LIMIT BOUNDARY OR TEMPORARY EROSION/SEDIMENTATION CONTROL PLAN IS/ARE DAMAGED, IT SHALL BE REPAIRED IMMEDIATELY.

21. ALL PROPERTIES ADJACENT TO THE PROJECT SITE SHALL BE PROTECTED FROM SEDIMENT DEPOSITION AND RUNOFF.

22. AT NO TIME SHALL MORE THAN 1' OF SEDIMENT BE ALLOWED TO ACCUMULATE WITHIN A CATCH BASIN. ALL CATCH BASINS AND CONVEYANCE LINES SHALL BE CLEANED IMMEDIATELY FOLLOWING REMOVAL OF EROSION CONTROL BMPS. THE CLEANING OPERATION SHALL NOT FLUSH SEDIMENT-LADEN WATER INTO THE DOWNSTREAM SYSTEM.

23. ANY PERMANENT RETENTION/DETENTION FACILITY USED AS A TEMPORARY SETTLING BASIN SHALL BE MODIFIED WITH THE NECESSARY EROSION CONTROL MEASURES AND SHALL PROVIDE ADEQUATE STORAGE CAPACITY. IF THE PERMANENT FACILITY IS TO FUNCTION ULTIMATELY AS AN INFILTRATION OR DISPERSION SYSTEM, THE FACILITY SHALL NOT BE USED AS A TEMPORARY SETTLING BASIN. NO UNDERGROUND DETENTION TANK, DETENTION VAULT, OR SYSTEM WHICH BACKS UNDER OR INTO A POND SHALL BE USED AS A TEMPORARY SETTLING BASIN.

24. ALL EROSION/SEDIMENTATION CONTROL PONDS WITH A DEAD STORAGE DEPTH EXCEEDING 6' MUST HAVE A PERIMETER FENCE WITH A MINIMUM HEIGHT OF 3'.

25. THE WASHED GRAVEL BACKFILL ADJACENT TO THE FILTER FABRIC FENCE SHALL BE REPLACED AND THE FILTER FABRIC CLEANED IF IT IS NONFUNCTIONAL BY EXCESSIVE SILT ACCUMULATION AS DETERMINED BY THE CITY OF KIRKLAND. ALSO, ALL INTERCEPTOR SWALES SHALL BE CLEANED IF SILT ACCUMULATION EXCEEDS ONE-QUARTER DEPTH. 3 EROSION – PLAN NOTES (CONTINUED)

26. PRIOR TO THE OCTOBER 1 OF EACH YEAR (THE BEGINNING OF THE WET SEASON), ALL DISTURBED AREAS SHALL BE REVIEWED TO IDENTIFY WHICH ONES CAN BE SEEDED IN PREPARATION FOR THE WINTER RAINS. THE IDENTIFIED DISTURBED AREA SHALL BE SEEDED WITHIN ONE WEEK AFTER OCTOBER 1. A SITE PLAN DEPICTING THE AREAS TO BE SEEDED AND THE AREAS TO REMAIN UNCOVERED SHALL BE SUBMITTED TO THE PUBLIC WORKS CONSTRUCTION INSPECTOR. THE INSPECTOR CAN REQUIRE SEEDING OF ADDITIONAL AREAS IN ORDER TO PROTECT SURFACE WATERS, ADJACENT PROPERTIES, OR DRAINAGE FACILITIES.

27. ANY AREA TO BE USED FOR INFILTRATION OR PERVIOUS PAVEMENT (INCLUDING A 5-FOOT BUFFER) MUST BE SURROUNDED BY SILT FENCE PRIOR TO CONSTRUCTION AND UNTIL FINAL STABILIZATION OF THE SITE TO PREVENT SOIL COMPACTION AND SILTATION BY CONSTRUCTION ACTIVITIES.

28. IF THE TEMPORARY CONSTRUCTION ENTRANCE OR ANY OTHER AREA WITH HEAVY VEHICLE LOADING IS LOCATED IN THE SAME AREA TO BE USED FOR INFILTRATION OR PERVIOUS PAVEMENT, 6" OF SEDIMENT BELOW THE GRAVEL SHALL BE REMOVED PRIOR TO INSTALLATION OF THE INFILTRATION FACILITY OR PERVIOUS PAVEMENT (TO REMOVE FINES ACCUMULATED DURING CONSTRUCTION).

29. ANY CATCH BASINS COLLECTING RUNOFF FROM THE SITE, WHETHER THEY ARE ON OR OFF THE SITE, SHALL HAVE ADEQUATE PROTECTION FROM SEDIMENT. CATCH BASINS DIRECTLY DOWNSTREAM OF THE CONSTRUCTION ENTRANCE OR ANY OTHER CATCH BASIN AS DETERMINED BY THE CITY INSPECTOR SHALL BE PROTECTED WITH A "STORM DRAIN PROTECTION INSERT' OR EQUIVALENT.

30. IF A SEDIMENT POND IS NOT PROPOSED, A BAKER TANK OR OTHER TEMPORARY GROUND AND/OR SURFACE WATER STORAGE TANK MAY BE REQUIRED DURING CONSTRUCTION, DEPENDING ON WEATHER CONDITIONS.

31. DO NOT FLUSH CONCRETE BY-PRODUCTS OR TRUCKS NEAR OR INTO THE STORM DRAINAGE SYSTEM. IF EXPOSED AGGREGATE IS FLUSHED INTO THE STORM SYSTEM, IT COULD MEAN RE-CLEANING THE ENTIRE DOWNSTREAM STORM SYSTEM, OR POSSIBLY RE-LAYING THE STORM LINE.

32. CONSTRUCTION DEWATERING DISCHARGES SHALL ALWAYS MEET WATER QUALITY GUIDELINES LISTED IN COK POLICY E-1. SPECIFICALLY, DISCHARGES TO THE PUBLIC STORMWATER DRAINAGE SYSTEM MUST BE BELOW 25NTU, AND NOT CONSIDERED A PROHIBITED DISCHARGE (PER KMC 15.52.090). TEMPORARY DISCHARGES TO SANITARY SEWER REQUIRE PRIOR AUTHORIZATION AND PERMIT FROM KING COUNTY INDUSTRIAL WASTE PROGRAM (206-263-3000) AND NOTIFICATION TO THE PUBLIC WORKS CONSTRUCTION INSPECTOR.

PERMIT REVIEW - NOT FOR CONSTRUCTION

NO.	DATE	BY	REVISION

NOTICE
0 ½ 1
IF THIS BAR DOES NOT MEASURE 1" THEN DRAWING IS NOT TO SCALE

JTS DESIGNED
DKH/BAW DRAWN
BMC CHECKED

PRELIMINARY ONLY
MARCH 2018

Murray Smith & Associates, Inc.
Engineers/Planners
2707 Colby Avenue, Suite 1110 PHONE 425.252.9003
Everett, Washington 98201-3566 FAX 425.252.8853

CITY OF KIRKLAND, WASHINGTON
ROSE POINT LIFT STATION IMPROVEMENTS

EROSION CONTROL NOTES

PROJECT NO.: 15-1880.203 | SCALE: AS SHOWN | DATE: MARCH 2018

SHEET G-7
5 of X

K:\TAC_Projects\15\1880 Rose Point Lift Station Upgrade\CAD\Sheets\15-1880-WA-G.dwg G-7 3/22/2018 9:06 AM BRETT.WILLIAMS 20.0s (LMS Tech)

Attachment 2
ZON16-00810

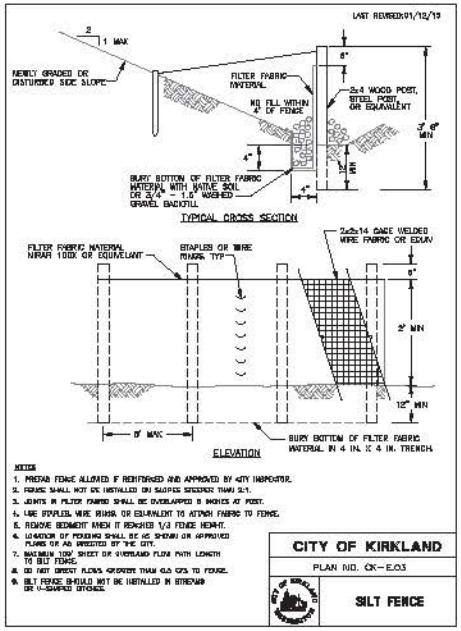

SILT FENCE (2/G-6)
SCALE: NTS

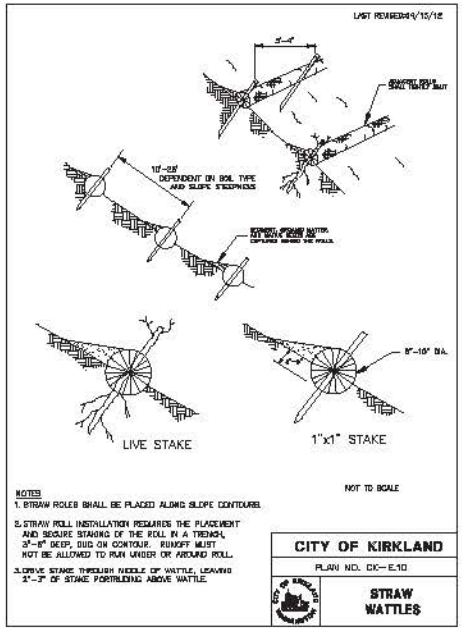

STRAW WATTLES (3/G-6)
SCALE: NTS

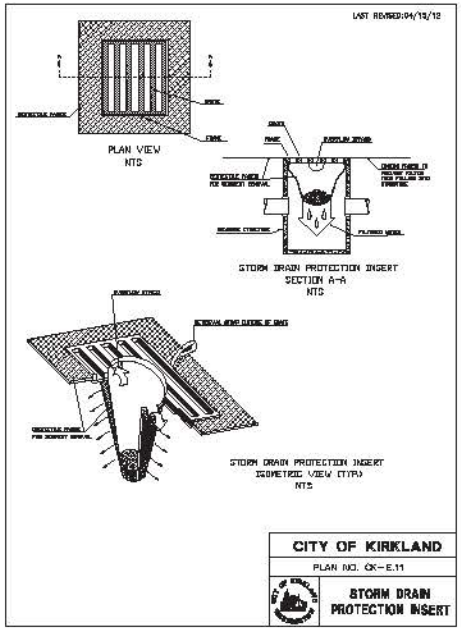

CATCH BASIN/INLET SEDIMENTATION TRAP (1/G-6)
SCALE: NTS

PERMIT REVIEW - NOT FOR CONSTRUCTION

NO.	DATE	BY	REVISION

NOTICE
0 ½ 1
IF THIS BAR DOES NOT MEASURE 1" THEN DRAWING IS NOT TO SCALE

JTS DESIGNED
DKH/BAW DRAWN
BMC CHECKED

PROFESSIONAL ENGINEER
MARCH 2018

MSA Murray, Smith & Associates, Inc.
Engineers/Planners
2707 Colby Avenue, Suite 1110 PHONE 425.252.9003
Everett, Washington 98201-3568 FAX 425.252.9463

CITY OF KIRKLAND, WASHINGTON
ROSE POINT LIFT STATION IMPROVEMENTS

EROSION CONTROL DETAILS

PROJECT NO.: 15-1880.203 | SCALE: AS SHOWN | DATE: MARCH 2018

SHEET G-8
8 of X

K:\TAC_Projects\15\1880 Rose Point Lift Station Upgrade\CAD\Sheets\15-1880-WA-G.dwg G-8 3/22/2018 9:06 AM BRETT.WILLIAMS 20.0s (LMS Tech)

Attachment 2
ZON16-00810

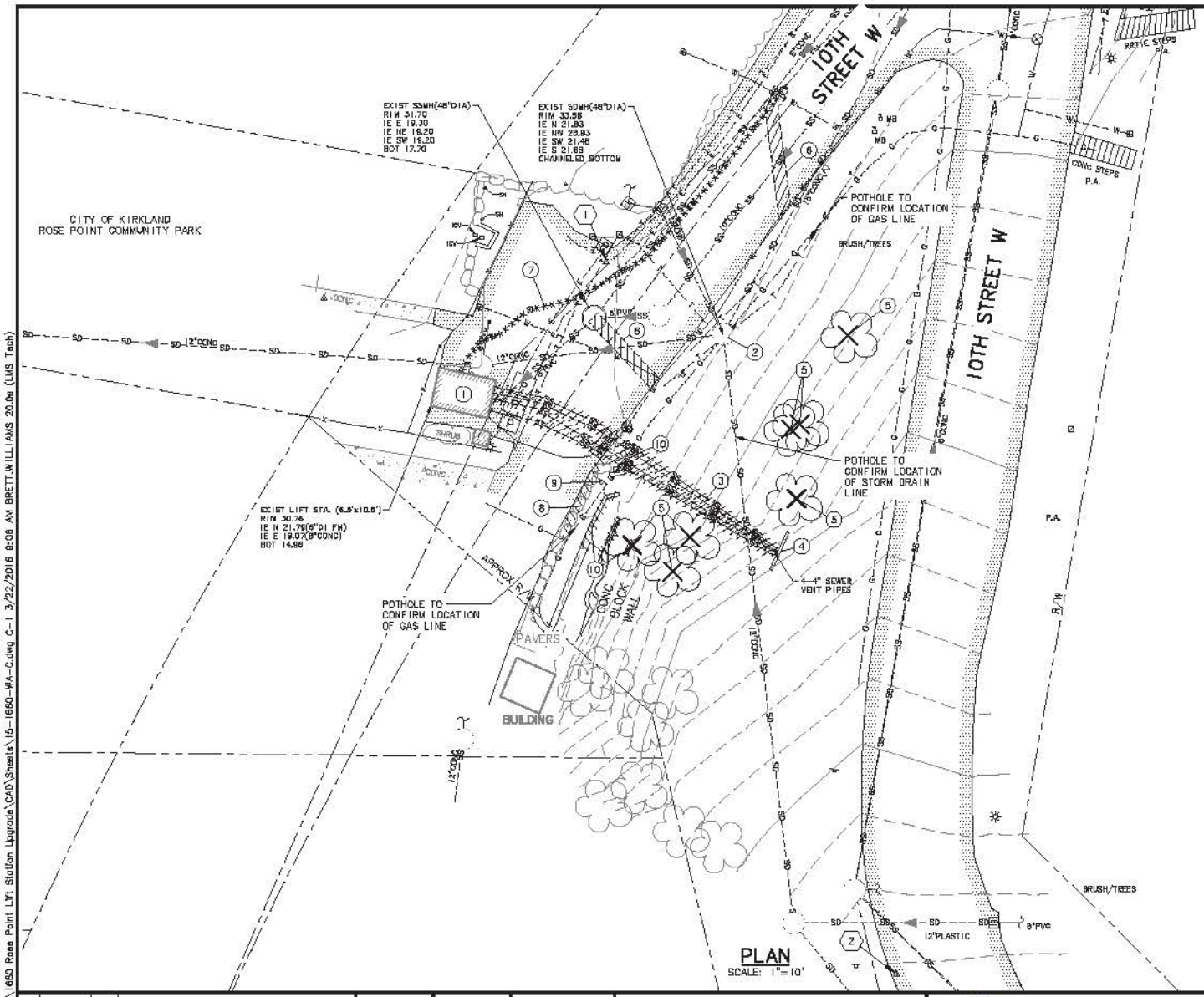

PLAN
SCALE: 1"=10'

KEY NOTES:

1. EXIST LIFT STATION STRUCTURE TO REMAIN IN PLACE, REMOVE ALL PUMPS, PIPING, VALVES, CONTROL PANELS, DISCONNECTS AND OTHER EQUIPMENT INSIDE OF DRY WELL. SEE SPECIFICATIONS FOR LIST OF SALVAGE MATERIAL
2. EXIST STORM DRAIN AND STORM DRAIN MANHOLE TO REMAIN IN PLACE
3. REMOVE 4-4" SEWER VENT PIPES
4. FENCE TO REMAIN IN PLACE
5. REMOVE TREE, TYP
6. SAWCUT AND REMOVE EXIST PAVEMENT FOR INSTALLATION OF GRAVITY SEWER AND FORCE MAIN, SEE SHEET C-4
7. CAP AND ABANDON 8" FORCE MAIN IN PLACE
8. REMOVE EXIST ROCK WALL
9. REMOVE AND RELOCATE EXIST SIGN
10. REMOVE EXIST WALLS, TYP

CONTROL POINTS

ID	NORTHING	EASTING	ELEVATION	DESCRIPTION
1	256349.543	1299875.786	31.99	MAG NAIL WASHER
2	256212.287	1299931.750	66.41	MAG NAIL WASHER

PROJECT DATUM:

VERTICAL DATUM: NAVD88, US FEET
HORIZONTAL DATUM: WASHINGTON STATE COORDINATE SYSTEM NORTH ZONE NAD83(91), US FEET
UTILIZING RTK GPS FIELD PROCEDURES

10 5 0 10 20
SCALE IN FEET

PERMIT REVIEW - NOT FOR CONSTRUCTION

NO.	DATE	BY	REVISION

NOTICE
0 ½ 1
IF THIS BAR DOES NOT MEASURE 1" THEN DRAWING IS NOT TO SCALE

BMC DESIGNED
HCM/BAW DRAWN
BMC CHECKED

MSA Murray, Smith & Associates, Inc. Engineers/Planners
2707 Colby Avenue, Suite 1110 Everett, Washington 98201-3526
PHONE 425.252.9003 FAX 425.252.9983

CITY OF KIRKLAND, WASHINGTON
ROSE POINT LIFT STATION IMPROVEMENTS

EXISTING SITE AND DEMOLITION PLAN

PROJECT NO.: 15-1680.203 | SCALE: AS SHOWN | DATE: MARCH 2016

SHEET C-1
X of X

K:\TAC_Projects\15\1680 Rose Point Lift Station Upgrade\CAD\Sheets\15-1680-WA-C.dwg C-1 3/22/2016 8:06 AM BRETT.WILLIAMS 20.0s (LMS Tech)