KAA05001

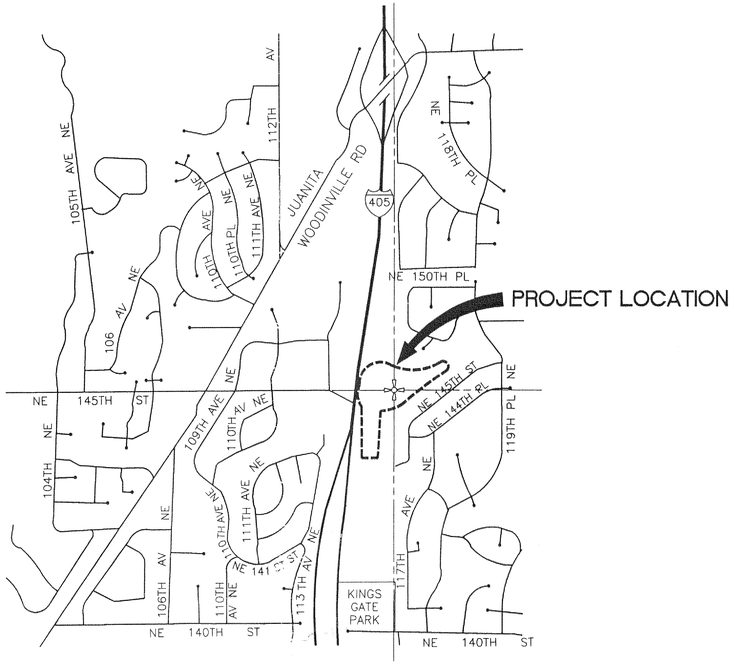

VICINITY MAP
NO SCALE

KING COUNTY

DEPT. OF PUBLIC WORKS

PAUL TANAKA
Director

High Woodland Regional Pond

Juanita Creek Flow Control Facilities

(N.E. 145th St. East of I-405)

DRAWING LIST

MAP NUMBER	SHEET NUMBER	DESCRIPTION
2000-75(1)	1	TITLE SHEET
2000-75(2)	2	SUMMARY OF QUANTITIES AND STRUCTURE NOTES
2000-75(3)	3	PROJECT CONTROL PLAN
2000-75(4)	4	ENTRY ROAD PLAN, PROFILE AND SECTION
2000-75(5)	5	ACCESS ROAD PLANS AND PROFILES
2000-75(6)	6	FLOW CONTROL STRUCTURE PLAN AND SECTIONS
2000-75(7)	7	FLOW CONTROL STRUCTURE DETAILS
2000-75(8)	8	TRASH RACK DETAILS
2000-75(9)	9	CIVIL DETAILS
2000-75(10)	10	BRIDGE IMPROVEMENTS
2000-75(11)	11	LANDSCAPING/WETLAND ENHANCEMENT
2000-75(12)	12	WETLAND ENHANCEMENT DETAILS

DATE	REVISION	BY

JACK C. BJORK, STATE OF WASHINGTON, 27129, REGISTERED PROFESSIONAL ENGINEER, 5/6/91

R.W. BECK AND ASSOCIATES

LARRY R. GIBBONS, STATE OF WASHINGTON, 16255, REGISTERED PROFESSIONAL ENGINEER

KING COUNTY DEPARTMENT OF PUBLIC WORKS
Paul Tanaka, Director
SURFACE WATER MANAGEMENT DIVISION

HIGH WOODLAND REGIONAL POND
JUANITA CREEK FLOW CONTROL FACILITIES

COVER SHEET

APPROVED Larry R. Gibbons DATE 4/29/91
RECOMMENDED Don Wood DATE
DESIGNED D.V.D. DRAWN S. Sellsted
PROJECT NO. 047007 SURVEY NO. 16-26-05-19 SHEET 1 OF 12

Surveyed
Plotted
Alignment Checked
Rt. of Way Checked
Note Book No. XXXXX
DATE
BY

2000-75(1)

KAA05004

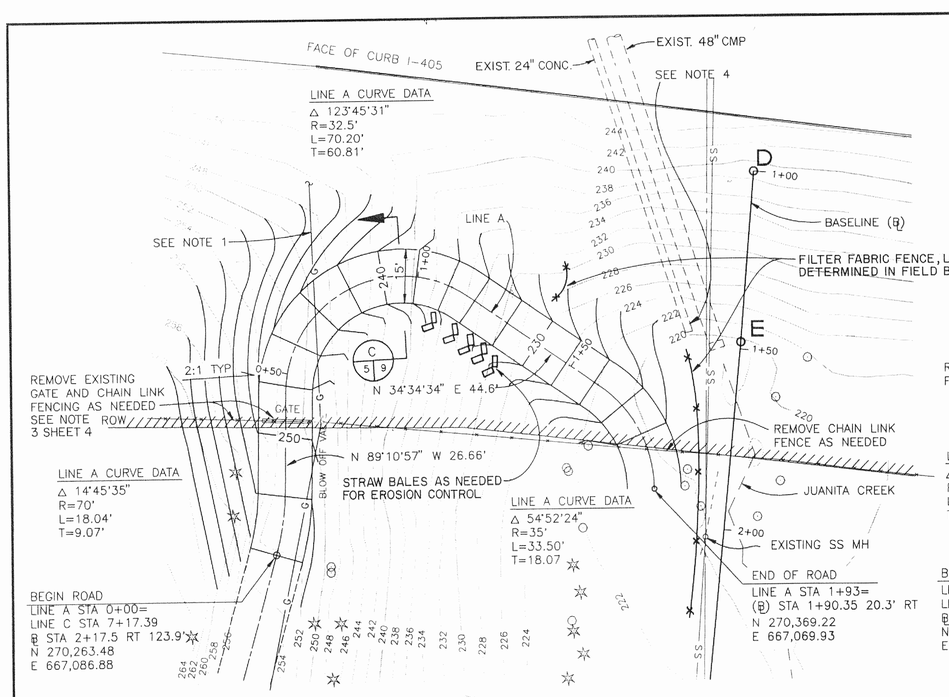

PHASE I–CONSTRUCTION ACCESS ROAD PLAN

20 0 20 40
SCALE IN FEET

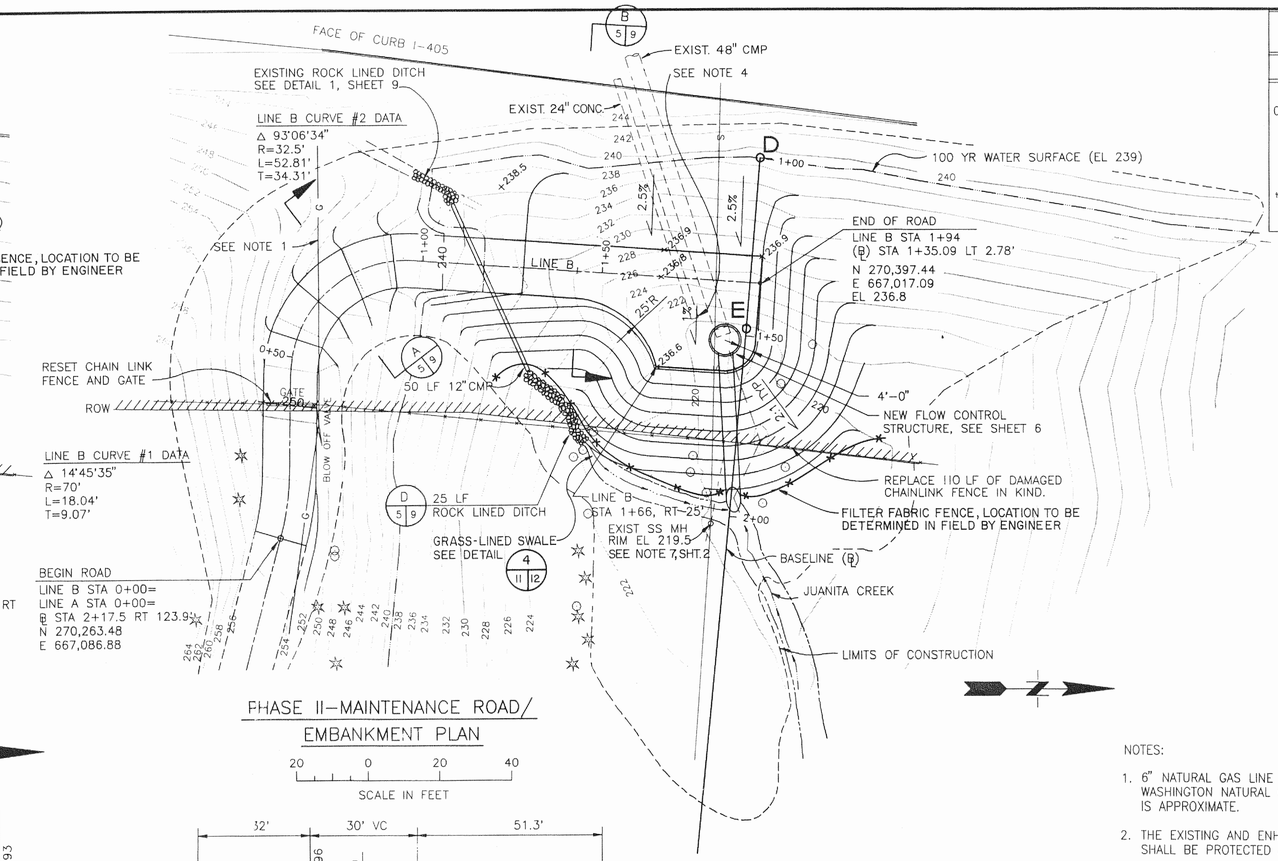

PHASE II–MAINTENANCE ROAD/ EMBANKMENT PLAN

20 0 20 40
SCALE IN FEET

LINE B ALIGNMENT TABLE	
STA	ALIGNMENT
0+00 P.C.	N 74°25'22" W
0+18.04	CURVE #1
0+44.70	N 89°10'57" W 26.66'
0+97.51	CURVE #2
1+94.00	N 03°55'37" E 96.49'

NOTES:

1. 6" NATURAL GAS LINE TO BE RELOCATED BY WASHINGTON NATURAL GAS. LOCATION SHOWN IS APPROXIMATE.
2. THE EXISTING AND ENHANCED WETLAND AREAS SHALL BE PROTECTED AS DESCRIBED ON SHEET 11.
3. STRIP 1'-2' OF MATERIAL UNDER NEW EMBANKMENT. REMOVE ALL TREES AND VEGETATION. USE PORTIONS OF CLEAN, STRIPPED MATERIAL ALONG CRUSHED ROCK PATH. SEE DETAIL 5, SHEET 12.
4. LOCATE AND EXPOSE END OF EXISTING 24" CONCRETE PIPE. IF APPROVED BY ENGINEER, THIS PIPE MAY BE USED TO DIVERT STREAM FLOW INTO, DURING CONSTRUCTION OF THE CONTROL STRUCTURE. PIPE SHALL BE PLUGGED WITH CONCRETE AFTER COMPLETION OF FLOW DIVERSION.
5. ALL IN-STREAM WORK SHALL BE DONE IN DRY PORTION ONLY. STREAM SHALL BE DIVERTED USING SAND BAGS OR OTHER MEANS PROVIDED BY CONTRACTOR.

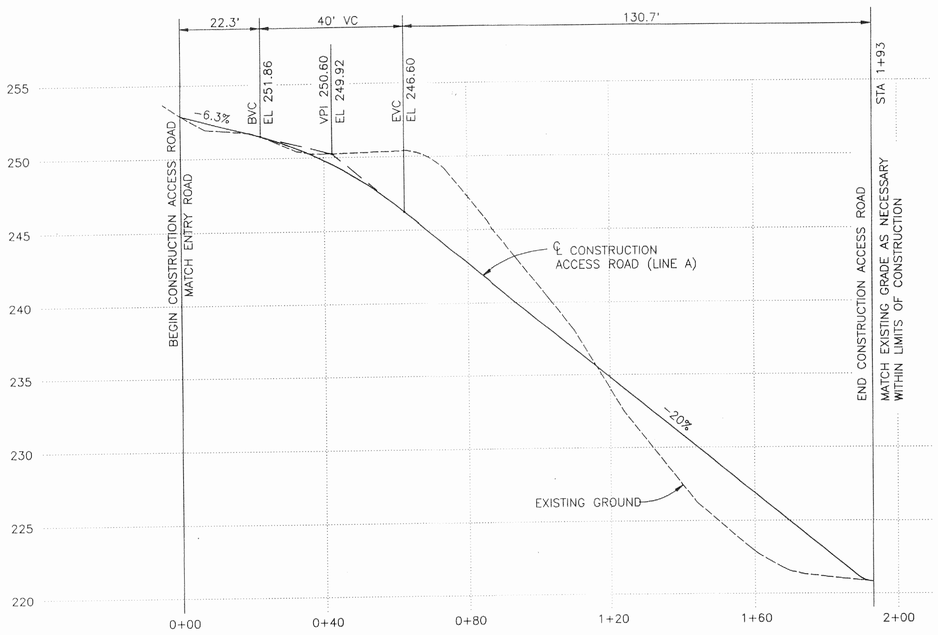

PHASE I CONSTRUCTION ACCESS ROAD

LINE A PROFILE

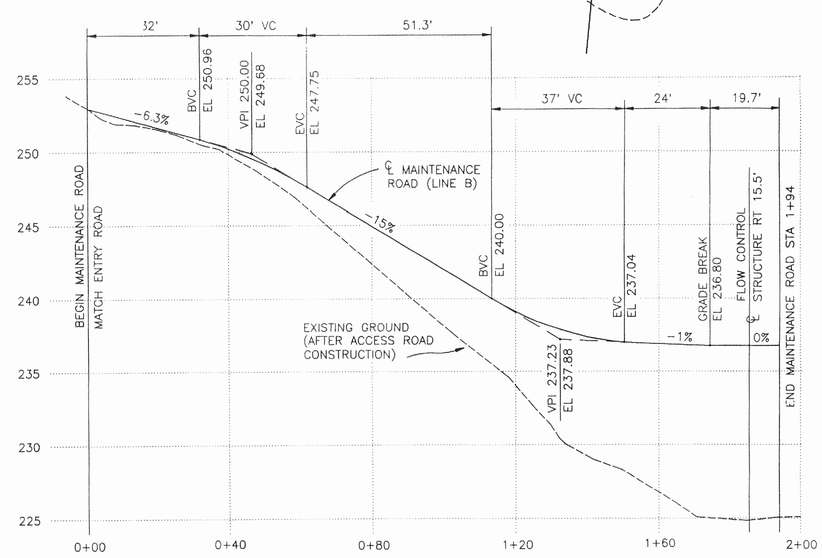

PHASE II MAINTENANCE ROAD

LINE B PROFILE

DATE	REVISION	BY

R.W. BECK AND ASSOCIATES

KING COUNTY DEPARTMENT OF PUBLIC WORKS
Paul Tanaka, Director
SURFACE WATER MANAGEMENT DIVISION

HIGH WOODLAND REGIONAL POND
JUANITA CREEK FLOW CONTROL FACILITIES

ACCESS ROAD PLANS AND PROFILES

APPROVED Larry R. Gibbons DATE 4/27/01
RECOMMENDED Don Wood DATE
DESIGNED D.M.V. DRAWN C.D.D.
PROJECT NO. 047007 SURVEY NO. 16-26-05-19 SHEET 5 OF 12

2000-75(5)

KAA05010

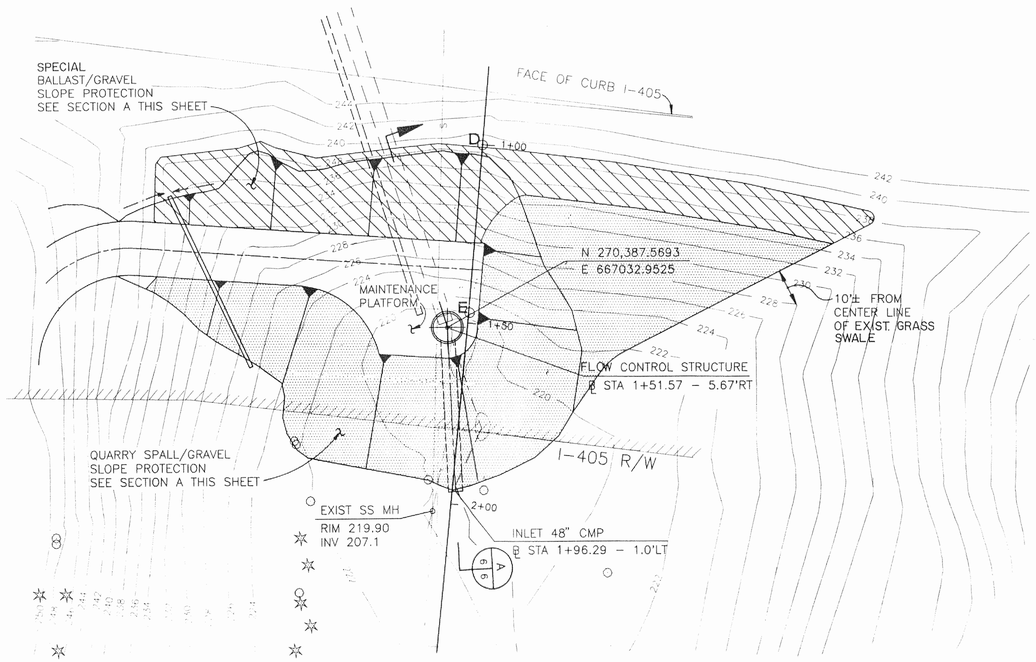

FLOW CONTROL STRUCTURE PLAN

20 0 20 40

SCALE IN FEET

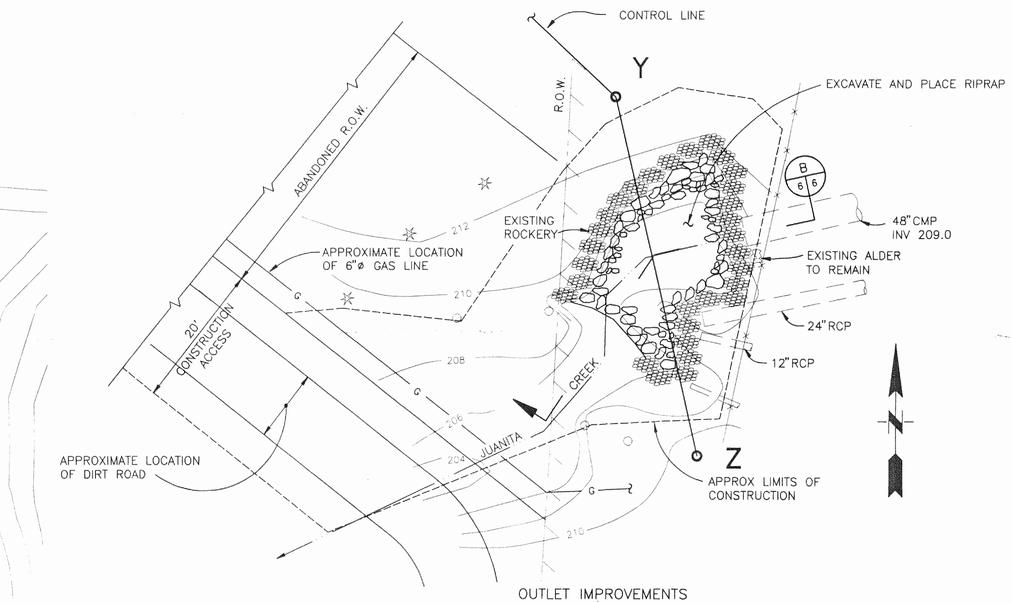

OUTLET IMPROVEMENTS

PLAN

10 0 10 20

SCALE IN FEET

NOTES

1. CONSTRUCT OF ON SITE TILL APPROXIMATE LOCATION OF MATERIAL IS AT STA 3+60 180' RT (SEE SHEET 3). EXACT LOCATION WILL BE IDENTIFIED BY THE ENGINEER. COMPACT TILL 95% MAX DRY DENSITY.
2. EXTEND 24" THICK SEEPAGE COLLAR SOUTHERLY TO COVER THE EXISTING 24" CONC. PIPE AS DIRECTED BY THE ENGINEER.

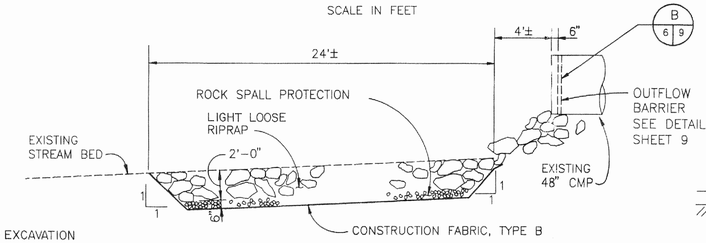

OUTLET IMPROVEMENTS

SECTION B 6 6

5 0 5 10

SCALE IN FEET

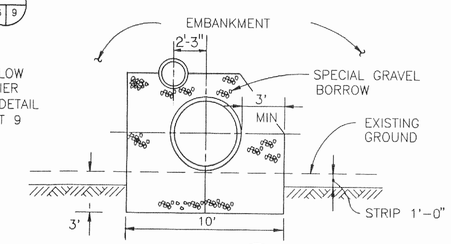

SECTION C 6 6

5 0 5 10

SCALE IN FEET

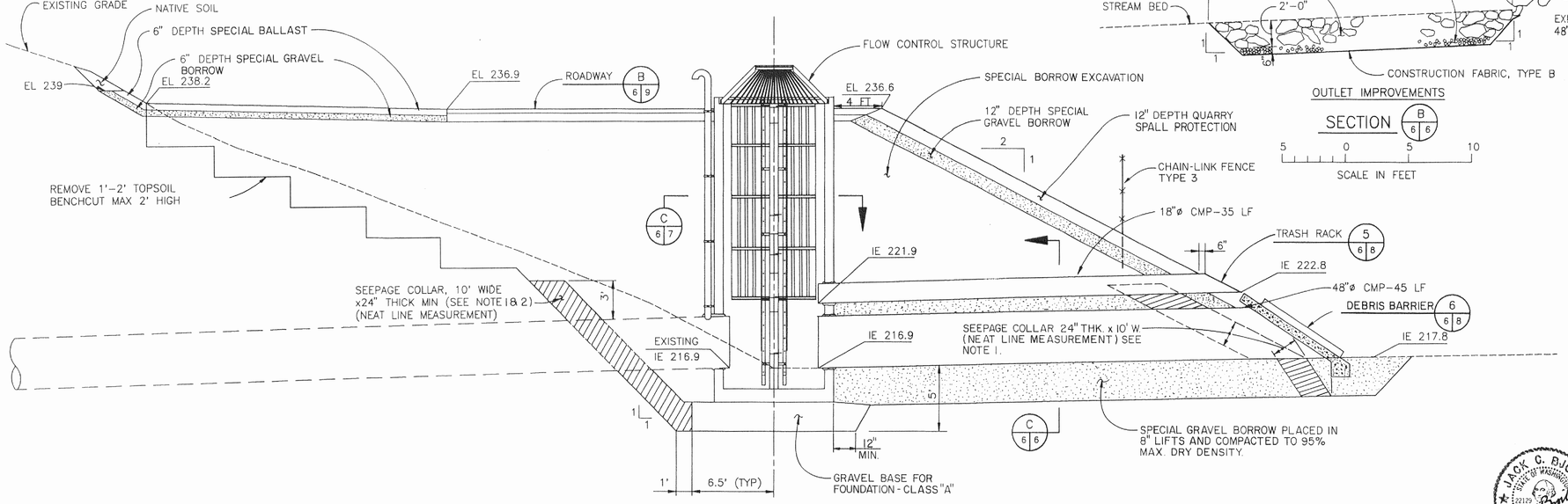

SECTION A 6 6

5 0 5 10

SCALE IN FEET

DATE	REVISION	BY

R.W. BECK AND ASSOCIATES

JACK C. BJORK STATE OF WASHINGTON 22129 REGISTERED PROFESSIONAL ENGINEER 5/16/19

LARRY R. GIBBONS STATE OF WASHINGTON 9 REGISTERED PROFESSIONAL ENGINEER

KING COUNTY DEPARTMENT OF PUBLIC WORKS
Paul Tanaka, Director
SURFACE WATER MANAGEMENT DIVISION

HIGH WOODLAND REGIONAL POND
JUANITA CREEK FLOW CONTROL FACILITIES

FLOW CONTROL STRUCTURE
PLAN AND SECTIONS

APPROVED Larry R. Gibbons DATE 4/29/91
RECOMMENDED Don Wood DATE
DESIGNED C.L.C./M.J.C DRAWN C.D.D.
PROJECT NO. 047007 SURVEY NO. 16-26-05-19 SHEET 6 OF 12

Surveyed
Plotted
Alignment Checked
R/L of Way Checked
Note Book No.
Date
By

2000-75(6)

KAA05007

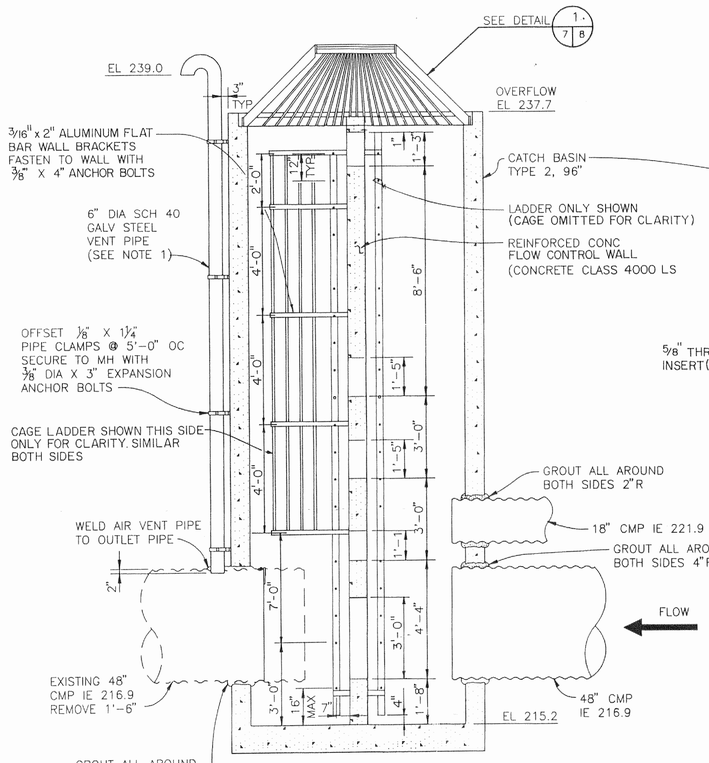

SECTION A/7 7

1 0 1 2 3 4 5 6 7
SCALE IN FEET

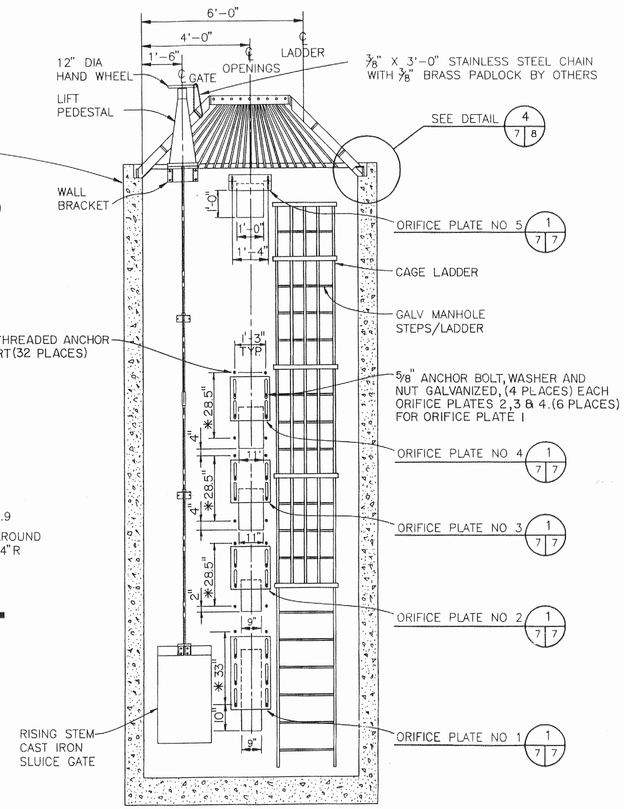

SECTION B/7 7

1 0 1 2 3 4 5 6 7
SCALE IN FEET

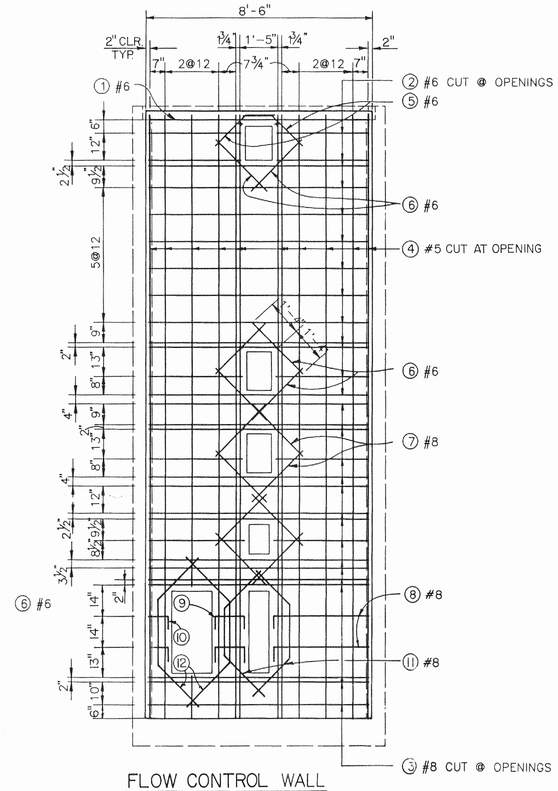

FLOW CONTROL WALL REINFORCEMENT DETAIL

1 0 1 2 3 4 5 6 7
SCALE IN FEET

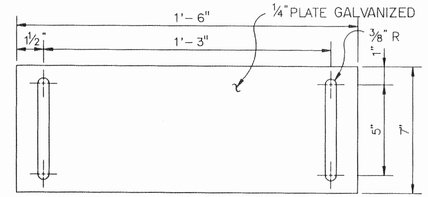

ORIFICE PLATE NO.5

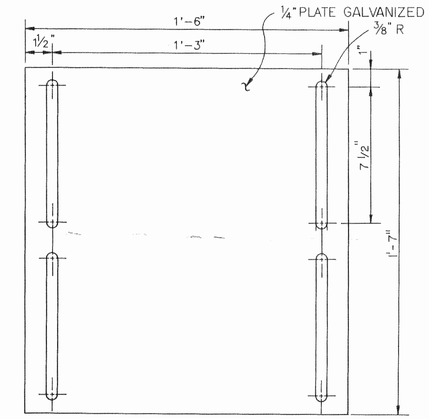

ORIFICE PLATE NO.2,3 & 4

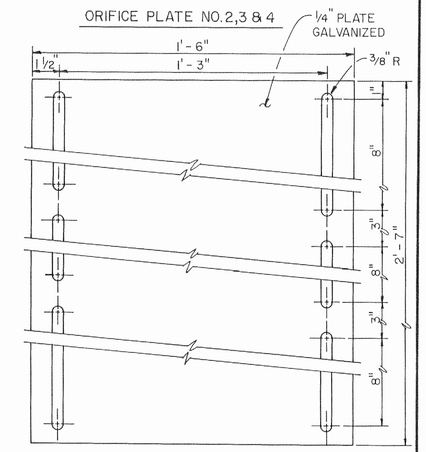

ORIFICE PLATE NO.1

DETAIL 1/7 7

0 6"
SCALE IN FEET

NOTE1: ALL STEEL PARTS SHALL BE GALVANIZED.

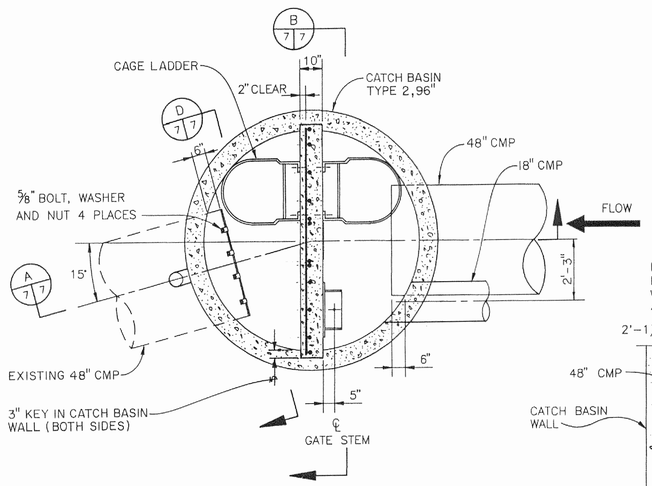

SECTION C/6 7

1 0 1 2 3 4 5 6 7
SCALE IN FEET

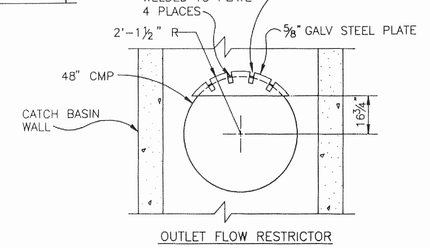

OUTLET FLOW RESTRICTOR

SECTION D/7 7

1 0 1 2 3 4 5
SCALE IN FEET

* DRILL 8 HOLES PER ORIFICE (4 EACH SIDE) FOR THREADED INSERTS AT (3) EQUAL SPACES 9.5" O.C. FOR ORIFICE 2,3 & 4. 11" O.C. FOR ORIFICE 1. HOLES TO MATCH SLOTTED ORIFICE PLATE.

BAR LIST

MARK	LOCATION	SIZE	NO	LENGTH	BENDING DIAGRAM
1	WALL HORIZONTAL	#6	1	7'-6" STR	
2	WALL HORIZONTAL	#6	13	8'-2" STR	
3	WALL HORIZONTAL	#8	16	8'-2" STR	
4	WALL VERTICAL	#5	12	22'-4" STR	
5	DIAGONAL	#6	2	2'-8"	5
6	DIAGONAL AND VERTICAL	#6	6	2'-8" STR	
7	DIAGONAL	#8	8	2'-8" STR	
8	WALL HORIZONTAL	#8	2	5'-7"	8 3'-7"
9	WALL HORIZONTAL	#8	2	2'-1 1/2"	9 1'-1 1/2" 9"
10	WALL HORIZONTAL	#8	2	2'-9"	10
11	DIAGONAL AND VERTICAL	#8	2	5'-8"	11 1'-8" 2'-0" 2'-0"
12	DIAGONAL AND VERTICAL	#8	2	6'-3"	12 2'-3" 2'-0" 2'-0"

DATE	REVISION	BY

R.W. BECK AND ASSOCIATES

JACK C. BJORK STATE OF WASHINGTON 22129 REGISTERED PROFESSIONAL ENGINEER 5/16/91

LARRY R GIBBONS STATE OF WASHINGTON 12125 REGISTERED PROFESSIONAL ENGINEER

KING COUNTY DEPARTMENT OF PUBLIC WORKS
Paul Tanaka, Director
SURFACE WATER MANAGEMENT DIVISION

HIGH WOODLAND REGIONAL POND
JUANITA CREEK FLOW CONTROL FACILITIES
FLOW CONTROL STRUCTURE DETAILS

APPROVED Larry R. Gibbons DATE 5/29/91
RECOMMENDED Don Wood DATE
DESIGNED C.L.C./M.J.C. DRAWN C.D.D.
PROJECT NO. 047007 SURVEY NO. 16-26-05-19 SHEET 7 OF 12

2000-75(7)

Note Book No.	Surveyed / Platted / Alignment Checked / Rt. of Way Checked	DATE

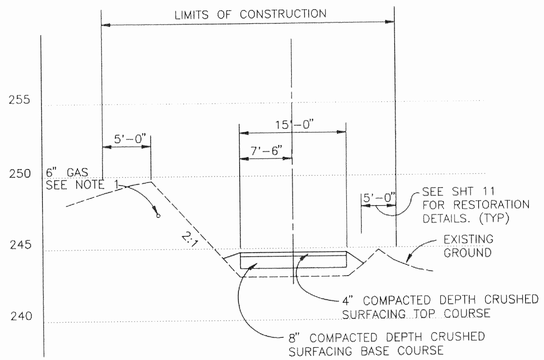

PHASE II MAINTENANCE ROAD

SECTION A 5 9

10 0 10 20

HORIZONTAL SCALE IN FEET

NOTES:
1. GAS TO BE RELOCATED BY WASHINGTON NATURAL GAS COMPANY. LOCATION IS APPROXIMATE.

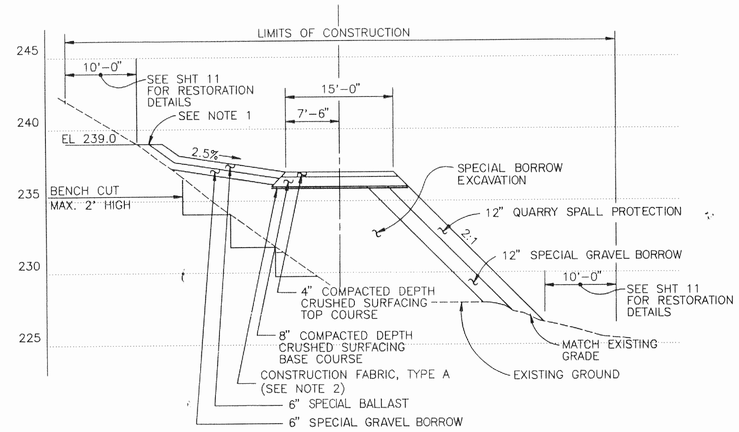

NOTES:
1. SLOPE PROTECTION TO BE PLACED AT THE GIVEN GRADE UNTIL IT MATCHES THE EXISTING SURFACE GRADE AND THEN SHOULD CONTINUE UP THE SLOPE TO THE ELEVATION OF 239.0.
2. CONSTRUCTION FABRIC, TYPE A EXTENDS FROM B STA 1+10 TO B STA 1+94 UNDER THE MAINTENANCE ROAD AND PLATFORM ONLY.

PHASE II MAINTENANCE ROAD

SECTION B 5 9

10 0 10 20

HORIZONTAL SCALE IN FEET

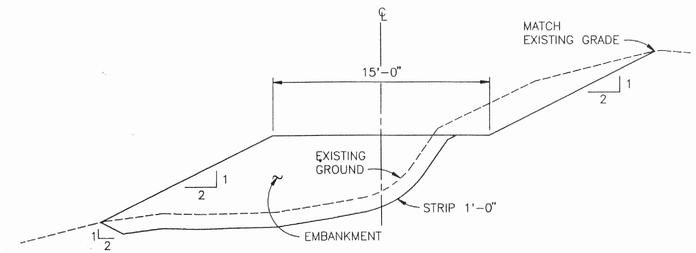

PHASE I CONSTRUCTION ACCESS ROAD

TYPICAL CROSS-SECTION C 5 9

5 0 5 10

SCALE IN FEET

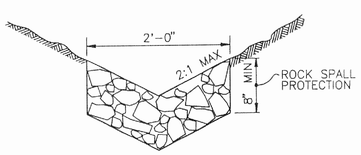

ROCK-LINED DITCH

SECTION D 9 9

1 0 1 2

SCALE IN FEET

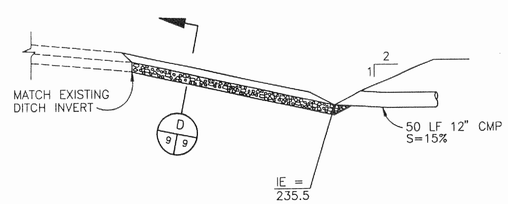

DETAIL 1 5 9

5 0 5 10

SCALE IN FEET

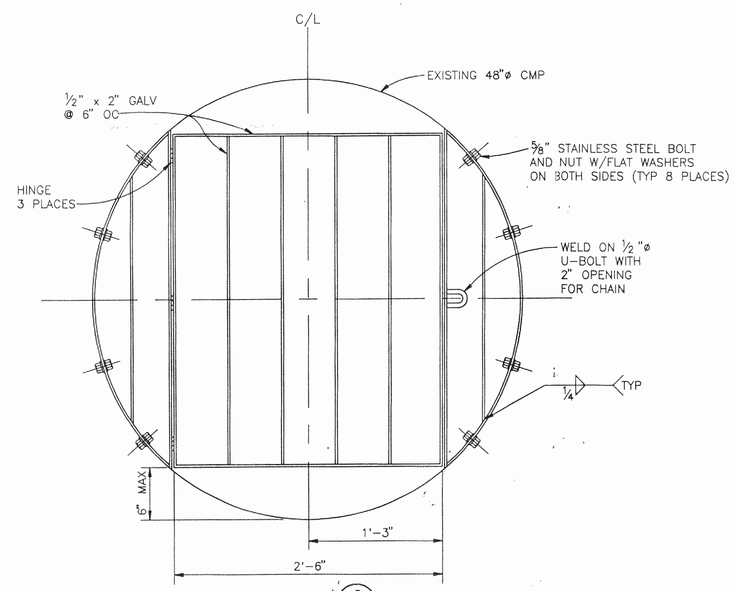

OUTLET BARRIER DETAIL 2 6 9

1 0 1

SCALE IN FEET

NOTES:
1. FIELD MEASURE EXISTING 48" CMP TO DETERMINE EXACT ID AND SHAPE.
2. DOOR SHALL SWING OUT FROM END OF PIPE.
3. CHAIN AND PADLOCK BY OTHERS.

DATE	REVISION	BY

R.W. BECK AND ASSOCIATES

LARRY R. GIBBONS STATE OF WASHINGTON 22930 REGISTERED PROFESSIONAL ENGINEER

JACK C. BJORK STATE OF WASHINGTON 22120 REGISTERED PROFESSIONAL ENGINEER

KING COUNTY DEPARTMENT OF PUBLIC WORKS
Paul Tanaka, Director
SURFACE WATER MANAGEMENT DIVISION

HIGH WOODLAND REGIONAL POND

JUANITA CREEK FLOW CONTROL FACILITIES

CIVIL DETAILS

APPROVED Larry R. Gibbons DATE 4/29/91
RECOMMENDED Don Wood DATE
DESIGNED D.V.D. DRAWN L.D.D.
PROJECT NO. 047007 SURVEY NO. 16-26-05-19 SHEET 9 OF 12

2000-75(9)

WETLAND LAYOUT TABLE

POINT	STATION	OFFSET	DESCRIPTION
A	1 + 60	41.0 LT	West edge of Salmonberry planting.
B	2 + 06	44.0 LT	East edge of Salmonberry planting.
C	2 + 06	5.0 LT	Center line of existing Juanita Creek, South edge of Red Twig Dogwood planting.
D	2 + 12	8.0 RT	West edge of peat soil placement for sedge planting.
E	2 + 41	19.0 LT	North edge of peat soil placement for sedge planting.
F	2 + 70	13.0 LT	East edge of peat soil placement for sedge planting.
G	1 + 86	41.0 RT	South edge of Red Twig Dogwood planting.
H	2 + 33	24.0 RT	South edge of peat soil placement for sedge planting.

NOTE: Wetland design and layout provided by Adolfson Associates, Inc. Station and offset points are approximate. Actual layout to be verified in the field by Engineer prior to construction.

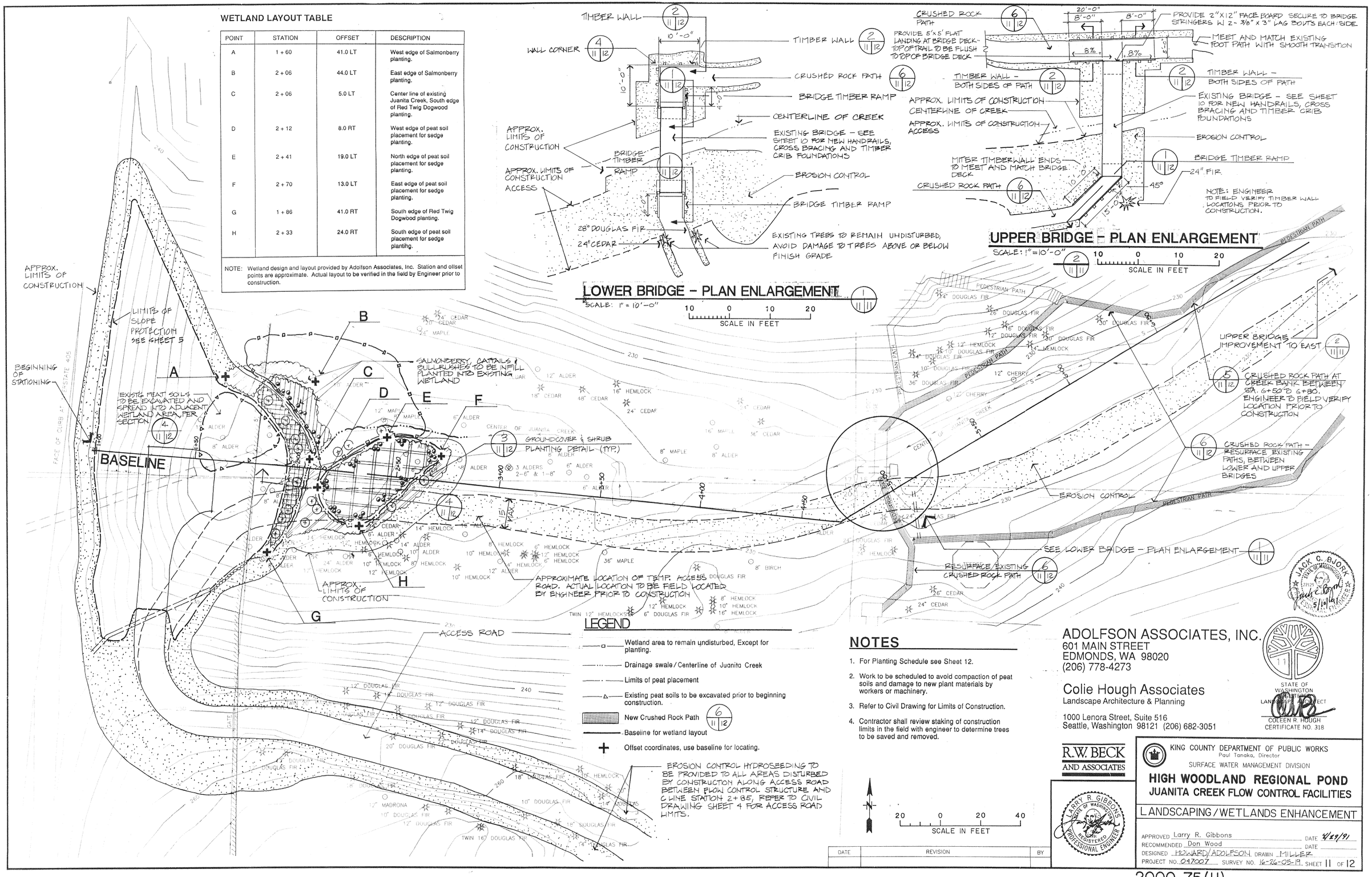

ADOLFSON ASSOCIATES, INC.
601 MAIN STREET
EDMONDS, WA 98020
(206) 778-4273

Colie Hough Associates
Landscape Architecture & Planning
1000 Lenora Street, Suite 516
Seattle, Washington 98121 (206) 682-3051

STATE OF WASHINGTON
LANDSCAPE ARCHITECT
COLEEN R. HOUGH
CERTIFICATE NO. 318

R.W. BECK AND ASSOCIATES

STATE OF WASHINGTON
LARRY R. GIBBONS
REGISTERED PROFESSIONAL ENGINEER

KING COUNTY DEPARTMENT OF PUBLIC WORKS
Paul Tanaka, Director
SURFACE WATER MANAGEMENT DIVISION

HIGH WOODLAND REGIONAL POND
JUANITA CREEK FLOW CONTROL FACILITIES

LANDSCAPING / WETLANDS ENHANCEMENT

APPROVED Larry R. Gibbons DATE 4/29/91
RECOMMENDED Don Wood DATE
DESIGNED HOWARD/ADOLFSON DRAWN MILLER
PROJECT NO. 017007 SURVEY NO. 16-26-05-19 SHEET 11 OF 12

2000-75(11)

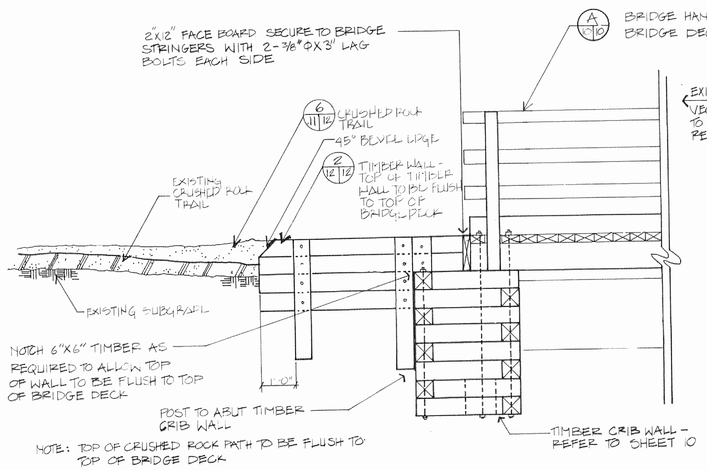

BRIDGE TIMBER RAMP (1/11/12)

SCALE ½" = 1'-0"

1 0 1 2 3 4 5

SCALE IN FEET

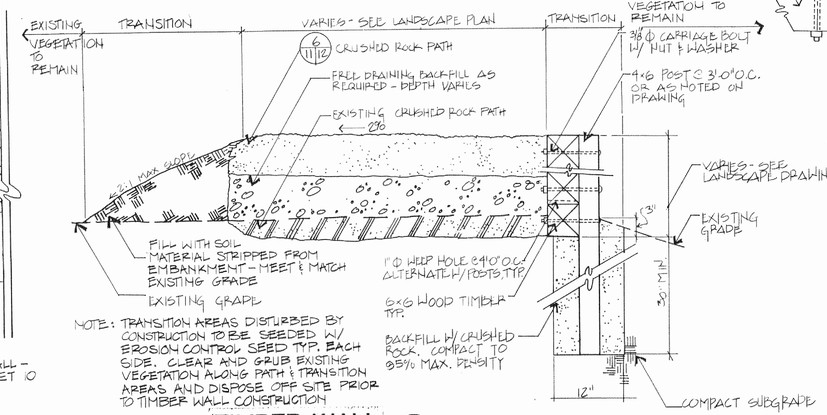

NOTE: TRANSITION AREAS DISTURBED BY CONSTRUCTION TO BE SEEDED W/ EROSION CONTROL SEED TYP. EACH SIDE. CLEAR AND GRUB EXISTING VEGETATION ALONG PATH & TRANSITION AREAS AND DISPOSE OFF SITE PRIOR TO TIMBER WALL CONSTRUCTION

TIMBER WALL (2/11/12)

SCALE 1" = 1'-0"

10 0 10 20

SCALE IN FEET

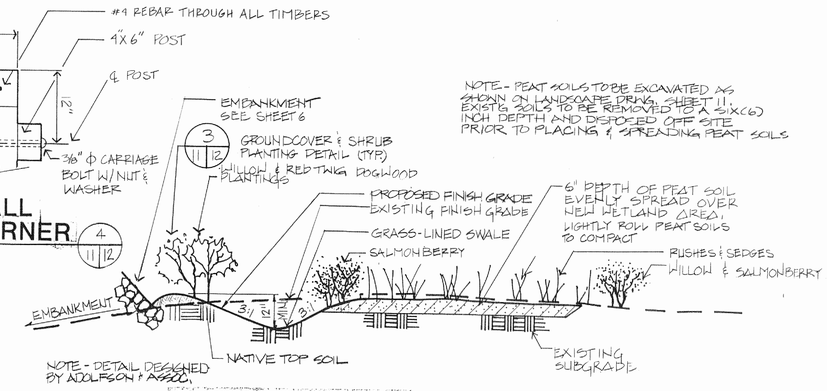

NOTE - PEAT SOILS TO BE EXCAVATED AS SHOWN ON LANDSCAPE DRWG. SHEET 11. EXISTING SOILS TO BE REMOVED TO A SIX (6) INCH DEPTH AND DISPOSED OFF SITE PRIOR TO PLACING & SPREADING PEAT SOILS

6" DEPTH OF PEAT SOIL EVENLY SPREAD OVER NEW WETLAND AREA. LIGHTLY ROLL PEAT SOILS TO COMPACT

NOTE - DETAIL DESIGNED BY ADOLFSON & ASSOC.

WALL CORNER (4/11/12)

WETLAND SECTION (4/11/12)

NO SCALE

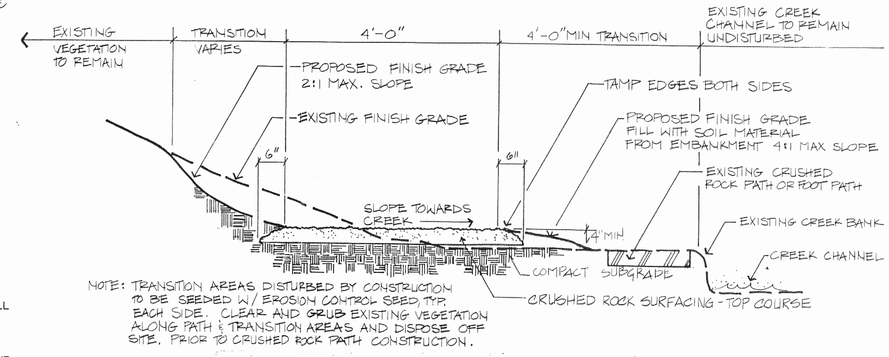

NOTE: TRANSITION AREAS DISTURBED BY CONSTRUCTION TO BE SEEDED W/ EROSION CONTROL SEED, TYP. EACH SIDE. CLEAR AND GRUB EXISTING VEGETATION ALONG PATH & TRANSITION AREAS AND DISPOSE OFF SITE, PRIOR TO CRUSHED ROCK PATH CONSTRUCTION.

CRUSHED ROCK PATH AT CREEK BANK (5/11/12)

SCALE 3/4" = 1'-0"

1 0 1 2 3

SCALE IN FEET

PLANT SCHEDULE

Symbol	Quantity	Botanical Name/Common Name	Size/Remarks
		TREES	
(+)	16	Salix lasiandra/ Pacific Willow	3 gal. cont./6'-7' ht.; Full and well branched.
	130	Rubus spectabilis/ Salmonberry	1 gal. cont./Full and well branched. Plant at 3'-0" O.C., triangular spacing.
	90	Cornus stolonifera/ Red Twig Dogwood	1 gal. cont./Full and well branched. Plant at 3'-0" O.C., triangular spacing.
	40	Scripus acutus/ Hardstem Bullrush	1 gal. cont./ Full and well branched.
	700	Carex stipata/ Sawbeak Sedge	1 gal. cont./Full and well branched. Plant at 18" O.C., triangular spacing.
	150	Typha spp./ Cattails	1 gal. cont./Full and well branched. Plant at 18" O.C., triangular spacing.
	*	Grass Line Swale seed mix	30% tall fescue; 40% red top bentgrass; 30% red fescue, see Specs. Planting Operation
	*	Hydroseeded erosion control	See specifications

* Where quantities are not given in the plant schedule, it is the Contractor's responsibility to determine quantities to cover.

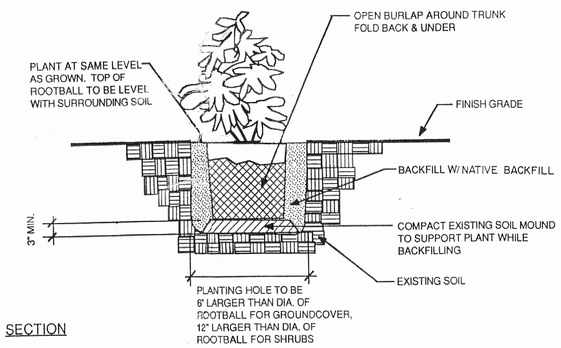

SECTION

GROUNDCOVER & SHRUB PLANTING DETAIL (3/11/12)

NO SCALE

ABBREVIATIONS

&	and	MIN.	minimum
@	at	O.C.	on center
CONST.	construction	%	percent
CONT.	container	TYP.	typical
	diameter	W/	with
EXIST'G	existing	C	center line
GAL.	gallon	APPROX.	approximate
HT.	height	LT	left
MAX.	maximum	RT	right

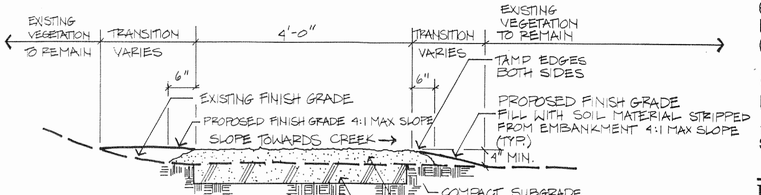

NOTE: TRANSITION AREAS DISTURBED BY CONSTRUCTION TO BE SEEDED W/ EROSION CONTROL SEED, TYP. EACH SIDE. CLEAR AND GRUB EXISTING VEGETATION ALONG PATH & TRANSITION AREAS AND DISPOSE OFF SITE, PRIOR TO CRUSHED ROCK PATH CONSTRUCTION.

NOTE: CRUSHED ROCK DEPTH VARIES. PROVIDE AND INSTALL MIN. 4" DEPTH OF CRUSHED ROCK TO PROVIDE A CONTINUOUS FLAT TRAIL SURFACE.

CRUSHED ROCK PATH (6/11/12)

SCALE: 3/4" = 1'-0"

1 0 1 2 3

SCALE IN FEET

DATE	REVISION	BY

ADOLFSON ASSOCIATES, INC.
601 MAIN STREET
EDMONDS, WA 98020
(206) 778-4273

Colie Hough Associates
Landscape Architecture & Planning
1000 Lenora Street, Suite 516
Seattle, Washington 98121 (206) 682-3051

STATE OF WASHINGTON REGISTERED LANDSCAPE ARCHITECT
COLEEN R. HOUGH
CERTIFICATE NO. 318

R.W. BECK AND ASSOCIATES

LARRY R. GIBBONS STATE OF WASHINGTON REGISTERED PROFESSIONAL ENGINEER

JACK C. BUONO STATE OF WASHINGTON REGISTERED PROFESSIONAL ENGINEER

KING COUNTY DEPARTMENT OF PUBLIC WORKS
Paul Tanaka, Director
SURFACE WATER MANAGEMENT DIVISION

HIGH WOODLAND REGIONAL POND
JUANITA CREEK FLOW CONTROL FACILITIES

WETLAND ENHANCEMENT DETAILS

APPROVED Larry R. Gibbons DATE 4/29/91
RECOMMENDED Don Wood DATE
DESIGNED HOWARD/ADOLFSON DRAWN MILLER
PROJECT NO. 017007 SURVEY NO. 20-26-05-28 SHEET 12 OF 12

2000-75 (12)

Surveyed		By
Platted		
Alignment Checked		
Rt. of Way Checked		
Note Book No.		
DATE		