CITY OF KIRKLAND

TOTEM LAKE CONNECTOR - ISSUE FOR BID

JOB NO. 01-20-PW

DECEMBER 06, 2019

CST CNM-0086-100

CITY OFFICIALS

PENNY SWEET	MAYOR
JAY ARNOLD	DEPUTY MAYOR
JON PASCAL	COUNCIL MEMBER
TOBY NIXON	COUNCIL MEMBER
DAVE ASHER	COUNCIL MEMBER
TOM NEIR	COUNCIL MEMBER
KELLI CURTIS	COUNCIL MEMBER
KURT TRIPLETT	CITY MANAGER
KATHY BROWN	PUBLIC WORKS DIRECTOR
ROD STEITZER, P.E.	CAPITAL PROJECTS MANAGER

CONTACT PERSONNEL

NAME	AGENCY	PHONE
AARON MCDONALD	COK PROJECTS MANAGER	425.587.3837
APARNA KHANAL	COK CAPITAL PROJECT SUPERVISOR	425.587.3827
TBD	PROJECT INSPECTOR	TBD
RIK MAYER	COK FIELD REPRESENTATIVE	206.496.4265
STEVE HOOPES	COK FIELD REPRESENTATIVE	425.623.5086
ERIN DEVOTO	DEPUTY PUBLIC WORKS DIRECTOR	425.587.3911
JOSH PANTZKE	COK UTILITIES DEPARTMENT	425.587.3917
DISPATCH	COK POLICE DEPARTMENT	425.587.3400
DISPATCH	COK FIRE DEPARTMENT	425.864.3650
DISPATCH	COK SPILL RESPONSE HOTLINE	425.587.3900
JEANNE COLEMAN	PUGET SOUND ENERGY	425.449.7410
SHARON SEITZ	PUGET SOUND ENERGY	206.643.1908
GEORGE MATOTE	NORTHSHORE UTILITY DISTRICT	425.398.4403
KEN McDOWELL	WOODINVILLE WATER DISTRICT	425.487.4104
MARK LAMPARD	KING COUNTY WASTEWATER TREATMENT DIVISION	206.477.5414
BRAD LANDIS	VERIZON BUSINESS	425.201.0901
JOE FORDON	COMCAST CABLE	425.263.5348
JASON ACQUARI	ZAYO	209.456.2856
JAY SCHWAB	FRONTIER COMMUNICATIONS	425.263.4035
RICHARD COX	SEATTLE PUBLIC UTILITIES	206.684.8117
JIMMY LIN	SEATTLE CITY LIGHT	206.733.9289
CONST.COORDINATOR	KING COUNTY METRO	206.684.2732
JEFF MILES	LAKE WASH. SCHOOL DISTRICT	425.936.1120
EMERGENCY		911
ONE CALL UTILITY LOCATE		800.424.5555

KIRKLAND

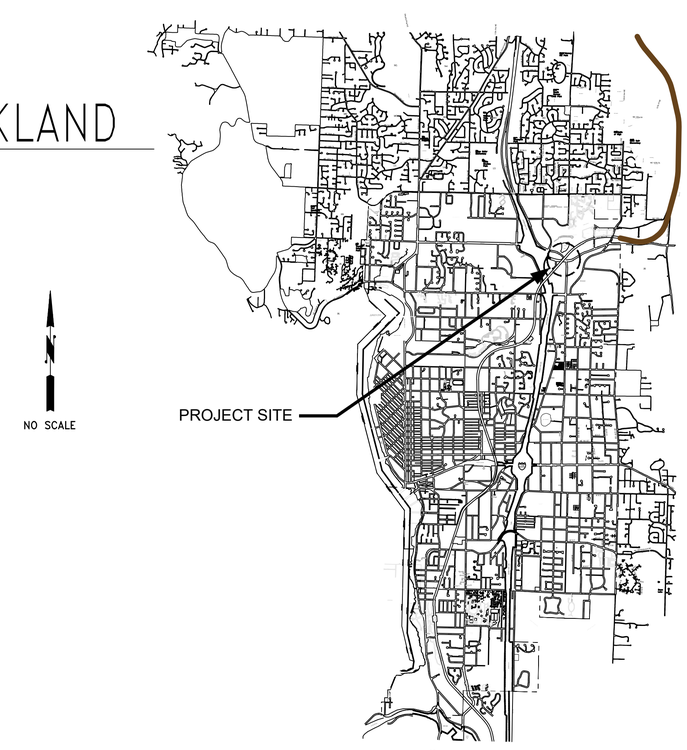

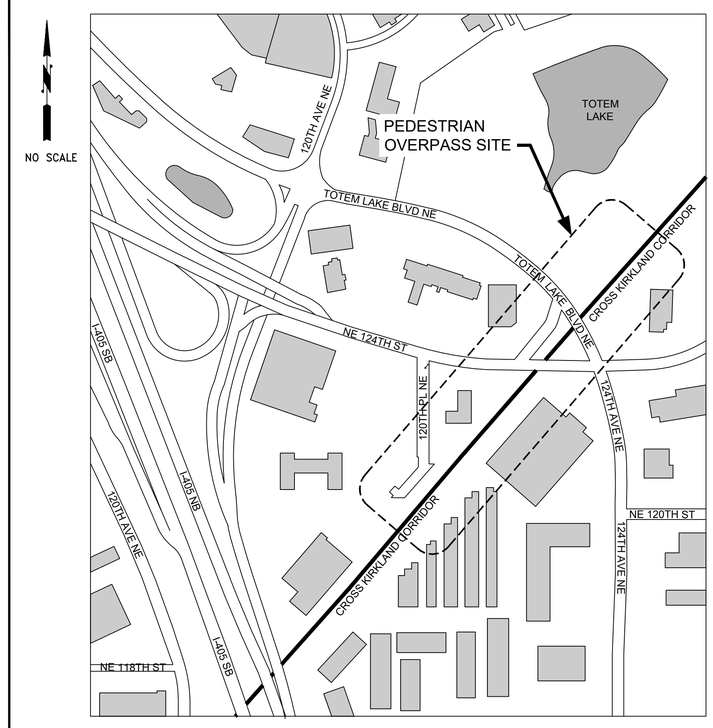

DRAWING SHEET INDEX

SHEET NO.	DWG NO.	REV. NO.	SHEET TITLE
1	–	0	COVER SHEET
2	TLC–G–100	0	DRAWING SHEET INDEX
3	TLC–S–101	0	GENERAL NOTES
4	TLC–S–102	0	SITE PLAN
5	TLC–S–103	0	ALIGNMENT & PROFILE GEOMETRY – SHEET 1
6	TLC–S–104	0	ALIGNMENT & PROFILE GEOMETRY – SHEET 2
7	TLC–S–105	0	GENERAL ARRANGEMENT – SHEET 1
8	TLC–S–106	0	GENERAL ARRANGEMENT – SHEET 2
9	TLC–S–107	0	GENERAL ARRANGEMENT – SHEET 3
10	TLC–S–108	0	SOUTH MSE WALL SECTIONS – SHEET 1
11	TLC–S–109	0	SOUTH MSE WALL SECTIONS – SHEET 2
12	TLC–S–110	0	SOUTH MSE WALL SECTIONS – SHEET 3
13	TLC–S–111	0	SOUTH MSE WALL SECTIONS – SHEET 4
14	TLC–S–112	0	NORTH MSE WALL SECTIONS – SHEET 1
15	TLC–S–113	0	NORTH MSE WALL SECTIONS – SHEET 2
16	TLC–S–114	0	MSE WALL ELEVATIONS
17	TLC–S–115	0	MSE WALL ELEVATIONS AND DETAILS
18	TLC–S–116	0	FOUNDATION LAYOUT
19	TLC–S–117	0	ABUTMENT FOUNDATIONS
20	TLC–S–118	0	CONCRETE Y–PIER FOUNDATIONS
21	TLC–S–119	0	STEEL Y–PIER FOUNDATIONS
22	TLC–S–120	0	SOUTH ABUTMENT OUTLINE
23	TLC–S–121	0	SOUTH ABUTMENT REINFORCEMENT
24	TLC–S–122	0	CONCRETE Y–PIER OUTLINE P2, P3, P5 & P6
25	TLC–S–123	0	CONCRETE Y–PIER OUTLINE P4
26	TLC–S–124	0	CONCRETE Y–PIER REINFORCEMENT
27	TLC–S–125	0	STEEL Y–PIERS
28	TLC–S–126	0	NORTH ABUTMENT OUTLINE – SHEET 1
29	TLC–S–127	0	NORTH ABUTMENT OUTLINE – SHEET 2
30	TLC–S–128	0	NORTH ABUTMENT REINFORCEMENT
31	TLC–S–129	0	NORTH ABUTMENT WINGWALL
32	TLC–S–130	0	SUPERSTRUCTURE – FRAMING PLAN SHEET 1
33	TLC–S–131	0	SUPERSTRUCTURE – FRAMING PLAN SHEET 2
34	TLC–S–132	0	SUPERSTRUCTURE – FRAMING PLAN SHEET 3
35	TLC–S–133	0	SUPERSTRUCTURE – FRAMING PLAN SHEET 4
36	TLC–S–134	0	SUPERSTRUCTURE – FRAMING PLAN SHEET 5
37	TLC–S–135	0	SUPERSTRUCTURE – FRAMING PLAN SHEET 6
38	TLC–S–136	0	SUPERSTRUCTURE – FRAMING PLAN SHEET 7
39	TLC–S–137	0	SUPERSTRUCTURE – HANGER, ARCH, AND TIE–CHORD SPLICE DETAILS
40	TLC–S–138	0	SUPERSTRUCTURE – END BEAM DETAILS – SHEET 1
41	TLC–S–139	0	SUPERSTRUCTURE – END BEAM DETAILS – SHEET 2
42	TLC–S–140	0	SUPERSTRUCTURE – END BEAM DETAILS – SHEET 3
43	TLC–S–141	0	SUPERSTRUCTURE – END BEAM DETAILS – OVERLOOK
44	TLC–S–142	0	SUPERSTRUCTURE – FLOOR–BEAM DETAILS
45	TLC–S–143	0	SUPERSTRUCTURE – PRECAST PANEL LAYOUT PLAN
46	TLC–S–144	0	SUPERSTRUCTURE – PRECAST PANEL REINFORCEMENT
47	TLC–S–145	0	SUPERSTRUCTURE – CIP OVERLAY & CURB LAYOUT PLAN
48	TLC–S–146	0	SUPERSTRUCTURE – CIP OVERLAY & CURB REINFORCEMENT
49	TLC–S–147	0	SUPERSTRUCTURE – APPROACH SLAB
50	TLC–S–148	0	DRAINS AND JOINT DETAILS
51	TLC–S–149	0	BEARING PLAN
52	TLC–S–150	0	BEARING DETAILS
53	TLC–S–151	0	MAINTENANCE WALKWAY
54	TLC–A–152	0	REST AREA
55	TLC–A–153	0	REST AREA PAVING PLAN – SHEET 1
56	TLC–A–154	0	REST AREA PAVING PLAN – SHEET 2
57	TLC–A–155	0	TYPICAL RAILING
58	TLC–A–156	0	RAILING TERMINATION
59	TLC–A–157	0	OVERLOOK
60	TLC–S–158	0	OVERLOOK – CIP OVERLAY
–	TLC–S–159 THRU TLC–S–164	–	NOT USED
61	TLC–S–165	0	SUGGESTED CONSTRUCTION STAGING
62	TLC–S–166	0	SUGGESTED CONSTRUCTION STAGING
–	TLC–S–167 THRU TLC–S–169	–	NOT USED
63	TLC–C–170	0	EROSION SEDIMENT CONTROL AND STORM DRAINAGE NOTES
64	TLC–C–171	0	DEMOLITION & EROSION CONTROL PLAN 1
65	TLC–C–171A	0	TEMPORARY ACCESS & TEMPORARY TRAIL PLAN 1
66	TLC–C–172	0	DEMOLITION & EROSION CONTROL PLAN 2
67	TLC–C–172A	0	TEMPORARY ACCESS & TEMPORARY TRAIL PLAN 2
68	TLC–C–173	0	DEMOLITION & EROSION CONTROL PLAN 3
69	TLC–C–173A	0	TEMPORARY ACCESS & TEMPORARY TRAIL PLAN 3
70	TLC–C–174	0	DEMOLITION & EROSION CONTROL PLAN 4
71	TLC–C–175	0	DEMOLITION & EROSION CONTROL PLAN 5
72	TLC–C–176	0	DEMOLITION & EROSION CONTROL PLAN 6
73	TLC–C–177	0	DEMOLITION & EROSION CONTROL PLAN 7
–	TLC–C–178 THRU TLC–C–180	–	NOT USED
74	TLC–C–181	0	TEMPORARY TRAFFIC CONTROL PLAN – DETOUR FOR PEDESTRIANS AND BIKES
75	TLC–C–182	0	TEMPORARY TRAFFIC CONTROL PLAN – LANE CLOSURE ON TOTEM LAKE BOULEVARD (NORTH SIDE)
76	TLC–C–183	0	TEMPORARY TRAFFIC CONTROL PLAN – LANE CLOSURE ON NE 124TH ST (SOUTH SIDE)
77	TLC–C–184	0	TEMPORARY TRAFFIC CONTROL PLAN – SLIP LANE CLOSURE FROM TOTEM LAKE BOULEVARD TO NE 124TH ST
78	TLC–C–185	0	TEMPORARY TRAFFIC CONTROL PLAN – DETOUR FOR SLIP LANE CLOSURE FROM TOTEM LAKE BOULEVARD TO NE 124TH ST
79	TLC–C–186	0	TEMPORARY TRAFFIC CONTROL PLAN – NIGHT TIME CLOSURE OF TOTEM LAKE BOULEVARD AND NE 124TH ST
80	TLC–C–187A	0	TEMPORARY TRAFFIC CONTROL PLAN – DETOUR FOR NIGHT TIME CLOSURE OF TOTEM LAKE BOULEVARD & NE 124TH ST (DETOUR FOR TOTEM LAKE BLVD)
81	TLC–C–187B	0	TEMPORARY TRAFFIC CONTROL PLAN – DETOUR FOR NIGHT TIME CLOSURE OF TOTEM LAKE BOULEVARD & NE 124TH ST (DETOUR FOR NE 124TH ST)
82	TLC–C–188	0	TEMPORARY TRAFFIC CONTROL PLAN – NIGHT TIME CLOSURE OF NE 124TH ST
83	TLC–C–189	0	TEMPORARY TRAFFIC CONTROL PLAN – DETOUR FOR NIGHT TIME CLOSURE OF NE 124TH ST
–	TLC–C–190	–	NOT USED
84	TLC–C–191	0	GRADING & DRAINAGE PLAN 1
85	TLC–C–192	0	GRADING & DRAINAGE PLAN 2
86	TLC–C–193	0	GRADING & DRAINAGE PLAN 3
87	TLC–C–194	0	GRADING & DRAINAGE PLAN 4
88	TLC–C–195	0	GRADING & DRAINAGE PLAN 5
89	TLC–C–196	0	GRADING & DRAINAGE PLAN 6
90	TLC–C–197	0	WEST DITCH TO EAST DITCH CULVERT CONNECTION
91	TLC–C–198	0	PROFILE – SIDEWALK CONNECTION AND RESTORED EAST DITCH
–	TLC–C–199	–	NOT USED
92	TLL–L–200	0	PLANT SCHEDULE
93	TLL–L–201	0	CORRIDOR RESTORATION 1
94	TLL–L–202	0	CORRIDOR RESTORATION 2
95	TLL–L–203	0	CORRIDOR RESTORATION 3
96	TLL–L–204	0	CORRIDOR RESTORATION 4
97	TLL–L–205	0	CORRIDOR RESTORATION 5
98	TLL–L–206	0	CORRIDOR RESTORATION 6
99	TLL–L–207	0	CORRIDOR RESTORATION 7
100	TLL–L–208	0	WALL PLANTING ELEVATIONS
–	TLL–L–209	–	NOT USED
101	TLL–L–210A	0	IRRIGATION NOTES 1
102	TLL–L–210B	0	IRRIGATION NOTES 2
103	TLC–C–220	0	CIVIL DETAILS 1
104	TLC–C–221	0	CIVIL DETAILS 2
105	TLC–C–222	0	CIVIL DETAILS 3
106	TLC–S–223	0	SIDEWALK GUARDRAIL DETAILS
–	–	–	–
107	TLC–E–300	0	LIGHTING SITE PLAN
108	TLC–E–301	0	ACCENT LIGHTING DETAILS 1
109	TLC–E–302	0	ACCENT LIGHTING DETAILS 2
110	TLC–E–303	0	ACCENT LIGHTING DETAILS 3
111	TLC–E–304	0	SINGLE LINE DIAGRAM
112	TLC–G–400	0	GEOTECHNICAL BOREHOLE KEY
113	TLC–G–401	0	GEOTECHNICAL BOREHOLE 1
114	TLC–G–402	0	GEOTECHNICAL BOREHOLE 2
115	TLC–G–403	0	GEOTECHNICAL BOREHOLE 3
116	TLC–G–404	0	GEOTECHNICAL BOREHOLE 4
117	TLC–G–405	0	GEOTECHNICAL BOREHOLE 5
118	TLC–G–406	0	GEOTECHNICAL BOREHOLE 6
119	TLC–G–407	0	GEOTECHNICAL BOREHOLE 7
120	TLC–G–408	0	GEOTECHNICAL BOREHOLE 8
121	TLC–G–409	0	GEOTECHNICAL BOREHOLE 9
122	TLC–G–410	0	GEOTECHNICAL BOREHOLE 10
123	TLC–G–411	0	GEOTECHNICAL BOREHOLE 11
124	TLC–G–412	0	GEOTECHNICAL BOREHOLE 12
125	TLC–G–413	0	GEOTECHNICAL BOREHOLE 13
126	TLC–G–414	0	GEOTECHNICAL BOREHOLE 14
127	TLC–G–415	0	GEOTECHNICAL BOREHOLE 15
128	TLC–G–416	0	GEOTECHNICAL BOREHOLE 16
129	TLC–G–417	0	GEOTECHNICAL BOREHOLE 17
130	TLC–G–418	0	GEOTECHNICAL BOREHOLE 18
131	TLC–G–419	0	GEOTECHNICAL BOREHOLE 19
132	TLC–G–420	0	GEOTECHNICAL BOREHOLE 20
133	TLC–G–421	0	GEOTECHNICAL TEST PITS

CITY OF KIRKLAND
DEPARTMENT OF PUBLIC WORKS
123 FIFTH AVENUE KIRKLAND, WA 98033
(425) 587-3800 www.kirklandwa.gov

NO.	DATE	BY	APPR.	REVISION
0	2019/12/06	CHJS	MWBM	ISSUE FOR BID

MATTHEW D. BALGEMANN — STATE OF WASHINGTON — STRUCTURAL ENGINEER — PROFESSIONAL ENGINEER — 2019 DEC 06

COWI

SCVA 2019/12/06
DESIGNED BY: DATE
CHJS 2019/12/06
DRAWN BY: DATE
MWBM 2019/12/06
CHECKED BY: DATE

CITY OF KIRKLAND
TOTEM LAKE CONNECTION

DRAWING SHEET INDEX

SHEET: TLC–G–100
SCALE: AS SHOWN
FILENAME: A088367–G–100.dwg

File: D:\projectwise\cow\d0301252\A088367–G–100.dwg Save Date: Oct 31, 2019 8:08 AM Saved By: CHJS

GENERAL STRUCTURAL NOTES:

1. GENERAL

TLC–S–101 TABLE 1: SURVEY CONTROL POINTS				
POINT	NORTHING	EASTING	ELEVATION	DESCRIPTION
300	261916.56	1309473.63	128.32	SCRIBE
301	261708.44	1309751.98	142.99	SCRIBE
302	261761.67	1309973.45	140.11	REBAR
303	261484.84	1309720.92	145.62	SCRIBE
304	261553.14	1309266.87	142.12	SCRIBE
305	261231.96	1309389.91	152.85	SCRIBE
306	261426.22	1309397.69	145.36	SCRIBE
311	261364.65	1309746.23	152.43	NAIL

1.1 SPECIFIC STRUCTURAL DRAWING NOTES SUPERSEDE GENERAL STRUCTURAL NOTES WHERE THERE ARE DIFFERENCES.

1.2 DESIGN CODES

THIS STRUCTURE HAS BEEN DESIGNED IN ACCORDANCE WITH THE REQUIREMENTS OF THE:

- AASHTO LRFD GUIDE SPECIFICATIONS FOR THE DESIGN OF PEDESTRIAN BRIDGES, 2009
- AASHTO GUIDE SPECIFICATIONS FOR LRFD SEISMIC BRIDGE DESIGN, 2ND EDITION, 2011
- AASHTO LRFD BRIDGE DESIGN SPECIFICATIONS, 7TH EDITION, 2014 WITH 2015–2016 INTERIM REVISIONS
- WSDOT BRIDGE DESIGN MANUAL (BDM), 2016
- WSDOT STANDARD SPECIFICATIONS M41–10, 2018
- AASHTO/AWS D1.5M/D1.5, BRIDGE WELDING CODE, 7TH EDITION, 2015
- AWS D1.1/D1.1M, STRUCTURAL WELDING CODE–STEEL, 23RD EDITION, 2015 W/ ERRATA 1

1.3 DESIGN LOADS

1.3.1 DEAD LOAD
- REINFORCED CONCRETE: 155 PSF
- STEEL: 490 PSF

1.3.2 LIVE LOAD (UNFACTORED)
- PEDESTRIAN: 90 PSF
- RAILING LOAD: PER AASHTO LRFD BRIDGE DESIGN SPECIFICATION 3.8
- CONSTRUCTION: 50 PSF
- VEHICLE: H10 + TRAILER (NO IMPACT)

1.3.3 SEISMIC DESIGN
- BRIDGE CLASSIFICATION: OTHER BRIDGE
- RETURN PERIOD: 975 YR
- SITE CLASS: D
- PGA: 0.39g
- S_{DS}: 1.01g
- S_{D1}: 0.53g
- S_{DC}: D

1.3.4 VEHICULAR COLLISION LOAD
- 420 KIPS AT 5'–0" ABOVE FINISHED GROUND

1.3.5 UNIFORM TEMPERATURE LOAD
- MAXIMUM DESIGN TEMPERATURE = 120°F
- MINIMUM DESIGN TEMPERATURE = 0°F

1.4 BRIDGE DESIGN LIFE: 75 YEARS

1.5 BELOW GROUND STEEL CORROSION LOSS RATES FOR NON–AGGRESSIVE FILL (PER BDM 7.10.2.C):
- RATE = 0.003 INCHES/YR
- TOTAL LOSS = 0.225 INCHES

1.6 ALL UNITS ARE IN FEET WITH A REFERENCE CONSTRUCTION TEMPERATURE OF 60°F UNLESS NOTED OTHERWISE.

1.7 DEFINITIONS:

BF = BACK FACE
CIP = CAST–IN–PLACE
CLR = CLEAR
C/W = COMPLETE WITH
DCP = DOUBLE CORROSION PROTECTION
EF = EACH FACE
EOP = EDGE OF PAVEMENT
EW = EACH WAY
FF = FRONT FACE
HORIZ = HORIZONTAL
HSS = HOLLOW STRUCTURAL SECTION
INT = INTERIOR
JNT = JOINT
KSF = KIPS PER SQUARE FOOT
KSI = KIPS PER SQUARE INCH
LF = LINEAR FOOT
MISC = MISCELANEOUS
NIC = NOT IN CONTRACT
OC = ON CENTER
OGFC = OPEN GRADED FRICTION COURSE
PL = PLATE
PSF = POUNDS PER SQUARE FOOT
PSI = POUNDS PER SQUARE INCH
REF = REFERENCE DIMENSION
ROW = RIGHT OF WAY
SE = SOUTHEAST
SS = STAINLESS STEEL
STIFF = STIFFENER
SYMM = SYMMETRIC ABOUT
THK = THICK
T.O. = TOP OF
TOC = TOP OF CONCRETE
TOD = TOP OF DECK
TYP = TYPICAL
UNO = UNLESS NOTED OTHERWISE
VERT = VERTICAL
W/ = WITH

PROVISIONAL = ITEM TO BE INSTALLED ONLY AS EXTENSION TO CONTRACT.

FUTURE = ITEM NOT REQUIRED UNDER THIS CONTRACT, BUT MAY BE INSTALLED AT A FUTURE DATE UNDER SEPARATE CONTRACT.

2. CONCRETE

2.1 CONCRETE COVER MEASURED FROM FACE OF CONCRETE TO ANY REINFORCING BAR SHALL BE AS FOLLOWS (INCHES), UNO:
- TOP OF DECK = 2.0
- SOFFIT OF DECK = 1.0
- SURFACES CAST AGAINST EARTH = 3.0
- DRILLED SHAFT = 6.0, UNO
- OTHER SURFACES NOT SPECIFIED ABOVE = 2.0

2.2 ALL EXPOSED EDGES OF CONCRETE TO BE CHAMFERED TO ¾", UNO.

2.3 CONCRETE CLASSES
- CAST–IN–PLACE CONCRETE FOR BRIDGE DECK SHALL BE CLASS 4000D
- STAY–IN–PLACE PRECAST CONCRETE DECK PANELS SHALL BE CLASS 4000D
- CAST–IN–PLACE CONCRETE FOR APPROACH SLABS SHALL BE CLASS 4000A
- CAST–IN–PLACE CONCRETE FOR DRILLED SHAFTS SHALL BE CLASS 5000P
- ALL OTHER CAST–IN–PLACE CONCRETE SHALL BE CLASS 4000
- CLASS 4000D AGGREGATE SHALL BE LIMITED TO 0.75–INCH PER SPECIAL PROVISIONS

2.4 EPOXY SHALL MEET THE REQUIREMENTS OF ASTM C881 AND APPROPRIATE CLASS FOR THE SITE TEMPERATURE:
- BONDING AGENT – TYPE II, GRADE 2
- REBAR AND ANCHOR BOLT – TYPE IV, GRADE 1, 2, OR 3
- LEVELING COURSE – TYPE I, GRADE 3

2.5 ROUGHENED CONCRETE SURFACES SHALL BE WET ABRASIVE BLAST CLEANED TO SOUND CONCRETE AND FREE OF LAITANCE IN ACCORDANCE WITH ASTM D4259 TO A MINIMUM PROFILE OF 0.25 INCHES.

2.6 WALKING SURFACE OF BRIDGE DECK AND APPROACH SLABS SHALL RECEIVE A TRANSVERSE BROOM FINISH.

3. REINFORCING STEEL

3.1 REINFORCING STEEL SHALL BE IN ACCORDANCE WITH ASTM A706 GRADE 60.

3.2 WELDING OF REINFORCING STEEL IS NOT PERMITTED, UNO.

3.3 SPLICING OF TRANSVERSE DECK REINFORCING BARS AT LOCATIONS OTHER THAN THOSE SPECIFIED ON THE DRAWINGS IS NOT PERMITTED.

3.4 LONGITUDINAL BAR SPLICES ON ADJACENT BARS IN THE DECK SHALL BE STAGGERED SUCH THAT NOT MORE THAN 50% OF THE BARS ARE SPLICED AT ANY LOCATION, AND NO SPLICES SHALL BE LOCATED OVER THE END BEAMS.

3.5 MECHANICAL COUPLERS SHALL ONLY BE USED WITH APPROVAL OF ENGINEER UNO.

4. STRUCTURAL STEEL

4.1 ROLLED STEEL SHAPES SHALL BE ASTM A992 GRADE 50.

4.2 PLATES AND BARS SHALL CONFORM TO ASTM A709 GRADE 50, UNO.

4.3 RECTANGULAR HOLLOW STRUCTURAL SECTIONS (HSS) SHALL CONFORM TO ASTM A500 GRADE B (46 KSI).

4.4 HANGERS SHALL USE ROUND HSS ASTM A500 GRADE C (46 KSI).

4.5 TIE–CHORD PIPE STEEL SHALL CONFORM TO API 5L X52 (52 KSI) OR BETTER.

4.6 ARCH PIPE STEEL SHALL CONFORM TO API 5L X52 (52 KSI) OR BETTER.

4.7 STAINLESS STEEL PIPES SHALL BE IN ACCORDANCE WITH ASTM A304.

4.8 ROUNDNESS OF PIPE FROM BENDING TO DESIGN GEOMETRY SHALL BE +/– 10% OF NOMINAL DIAMETER.

4.9 ALL STAINLESS STEEL, DESIGNATED AS SS, SHALL CONFORM TO ASTM A267, GRADE 304 OR 316.

4.10 ALL WELDING SHALL CONFORM TO AWS D1.5 AND D1.1. FIELD WELDS SHALL BE GROUND SMOOTH WHERE SHOWN ON THE PLANS AND PAINTED TO MATCH SURROUNDING STEEL. FULL ULTRASONIC TESTING OF FIELD WELDS IS REQUIRED.

4.11 SHEAR CONNECTORS SHALL CONFORM TO ASTM A108, WITH A MINIMUM TENSILE STRENGTH OF 60 KSI. SHEAR CONNECTORS SHALL BE 0.75–INCH DIA. X 4.75–INCHES LONG, UNO.

4.12 STRUCTURAL BOLTS SHALL BE HIGH STRENGTH STRUCTURAL BOLTS CONFORMING TO ASTM F3125 GRADE 325, TYPE 1, HOT DIPPED GALVANIZED. BOLTS SHALL BE 1–INCH DIA, WITH THREADS EXCLUDED FROM THE SHEAR PLANE, AND STD SIZE HOLES, UNO. FAYING SURFACES SHALL COME WITH A CLASS B SURFACE CONDITION.

4.13 ANCHOR BOLTS SHALL CONFORM TO ASTM F1554, GRADE 55 HOT DIPPED GALVANIZED, UNO.

4.14 BOLTS SHALL BE TIGHTENED BY TURN–OF–THE–NUT METHOD UNO.

4.15 FLAT COUNTERSUNK CAP SCREWS (SFHCS) SHALL CONFORM TO ASTM F835.

4.16 STRUTS OF CONCRETE Y–PIERS SHALL NOT DEVIATE FROM STRAIGHT BY MORE THAN 1/1000 OF THE LENGTH BETWEEN POINTS OF LATERAL SUPPORT.

4.17 STEEL Y–PIERS COLUMN PLUMBNESS SHALL BE WITHIN 1/500 OF VERTICAL.

4.18 ARCH STRAIGHTNESS WITHIN THEIR PLANE SHALL BE IN ACCORDANCE WITH AWS D1.1 CLAUSE 7.22.1. 1

4.19 EACH MEMBER SHALL CARRY AN ERECTION MARK FOR IDENTIFICATION.

4.20 TIE–CHORD, ARCHES, HANGERS, AND END BEAMS SHALL BE FABRICATED ACCORDING TO FRACTURE CRITICAL MEMBER CRITERIA AND SHALL CONFORM TO THE LONGITUDINAL CHARPY V–NOTCH TESTING REQUIREMENTS OF THE STANDARD SPECIFICATIONS SECTION 6–03.2.

4.20 END BEAMS SHALL USE HIGH PERFORMANCE STEEL (HPS).

4.21 WELD ELECTRODE SHALL BE 70 KSI.

5. MISCELLANEOUS STEEL

5.1 MISCELLANEOUS STEEL SHALL CONFORM TO ASTM A572, GRADE 50 KSI.

5.2 MISCELLANEOUS STEEL IS STEEL NOT IDENTIFIED AS STRUCTURAL STEEL.

5.3 WELDING OF MISCELLANEOUS STEEL SHALL CONFORM TO AWS D1.1.

5.4 ALL MISCELLANEOUS STEEL AND EMBEDDED PLATE SHALL BE HOT DIPPED GALVANIZED TO ASTM A123.

6. COATINGS

6.1 ALL STRUCTURAL STEEL SHALL BE PAINTED UNLESS NOTED OTHERWISE. STEEL SURFACES SHALL BE BLAST CLEANED TO NEAR WHITE METAL BLAST, TO A 2 MIL PROFILE, AND PAINTED WITH A THREE COAT PAINT SYSTEM AS FOLLOWS:
- PRIME AND STRIP: INORGANIC ZINC RICH PRIMER 2.4 TO 2.8 MIL
- MIDCOAT: POLYAMIDE HIGH PERFORMANCE EPOXY 5.0 TO 6.0 MIL
- TOPCOAT: ALIPHATIC POLYURETHANE 1.5 TO 2.0 MIL

6.2 ALL TOP COAT PAINT (INCLUDING TOUCHUPS) SHALL COME FROM ONE SOURCE. THE COLOR SHALL BE PER SECTIONS 6–03.3(30) AND 6–07.2 OF THE SPECIAL PROVISIONS.

6.3 AREAS COVERED IN CONCRETE DO NOT NEED TO BE PAINTED. PAINT IS REQUIRED TO BE CARRIED INTO THE CONCRETE TO PROVIDE AN OVERLAP ZONE OF 2–INCHES MINIMUM.

6.4 AREAS REQUIRING FIELD WELDING SHALL BE MASKED OFF IN SHOP TO MAINTAIN BARE STEEL FINISH.

6.5 EXPOSED FACES OF ABUTMENTS A1 AND A12, PIERS P2–P6, AND PEDESTALS OF PIERS P7–P11 SHALL BE CLASS 2 WITH PIGMENTED SEALER. FINISH SHALL EXTEND 1' MIN BELOW FINISHED GROUND.

7. PRESTRESSING BARS

7.1 PT BARS SHALL BE DOUBLE CORROSION PROTECTED (DCP) HIGH STRENGTH 1.75" DIA. BARS CONFORMING TO AASHTO M275 GRADE 150 TYPE 2.

7.2 MANUFACTURER APPROVED HARDWARE SHALL BE USED FOR ANCHOR PLATES AND HEX NUTS.

8. BEARINGS

8.1 DISC BEARINGS SHALL CONFORM TO SPECIAL PROVISIONS.

9. CONSTRUCTION

9.1 A MONITORING SURVEY SHALL BE CONDUCTED DURING FOUNDATION WORK NEAR UTILITIES AND EXISTING STRUCTURES.

9.2 DRILLED SHAFT TIP ELEVATIONS ARE SUBJECT TO CHANGE AS APPROVED BY GEOTECHNICAL ENGINEER, DEPENDING UPON FOUNDATION MATERIAL ENCOUNTERED.

9.3 CONTRACTOR SHALL BE RESPONSIBLE FOR THE STABILITY OF THE STRUCTURE DURING CONSTRUCTION/ERECTION. ERECTION SEQUENCE DRAWINGS AND LIFTING PLANS SHALL BE SIGNED/SEALED BY WASHINGTON SE AND SUBMITTED TO ENGINEER FOR REVIEW PRIOR TO CARRYING OUT THE OPERATIONS.

9.4 FALSEWORK SHALL BE CAREFULLY RELEASED TO PREVENT IMPACT OR UNDUE STRESS IN THE STRUCTURE. CONCRETE PIER FORMWORK RELEASE SHALL FOLLOW THE SEQUENCE INDICATED ON THE PLANS.

9.5 AS–BUILT ELEVATIONS AND COORDINATES OF STEELWORK SHALL BE SUBMITTED TO ENGINEER FOR VERIFICATION PRIOR TO FULL SPAN LIFTS AND AFTER SPANS ARE ERECTED. ADJUSTMENTS TO STEELWORK MAY BE REQUIRED PRIOR TO CONCRETE PANEL PLACEMENT.

9.6 POINT LOADS ABOVE THE KC YORK FORCE MAIN SHALL BE AVOIDED DURING CONSTRUCTION ACTIVITIES OR PROTECTION OVER THE LINES SHALL BE PROVIDED. SEE NOTES ON SHEET TLC–S–165 FOR ADDITIONAL DETAILS.

CITY OF KIRKLAND
DEPARTMENT OF PUBLIC WORKS
123 FIFTH AVENUE KIRKLAND, WA 98033
(425) 587-3800 www.kirklandwa.gov

NO.	DATE	BY	APPR.	REVISION
1	2020/03/09	KNBR	MWBM	ADDENDUM 3
0	2019/12/06	CHJS	MWBM	ISSUE FOR BID

MATTHEW D. BAUGHMAN, STATE OF WASHINGTON, REGISTERED PROFESSIONAL ENGINEER, 46200 MAR 09 2020

COWI

APPROVED BY:

DATE:

SCVA	2019/12/06	DESIGNED BY: DATE
CHJS	2019/12/06	DRAWN BY: DATE
MWBM	2019/12/06	CHECKED BY: DATE

CITY OF KIRKLAND
TOTEM LAKE CONNECTION

GENERAL NOTES

SHEET: TLC–S–101
SCALE: AS SHOWN
FILENAME: A088367–S–101.dwg

File: C:\pwwork\dklpw2\d0301252\A088367–S–101.dwg Save Date: Jun 20, 2019 2:59 PM Saved By: MKAL

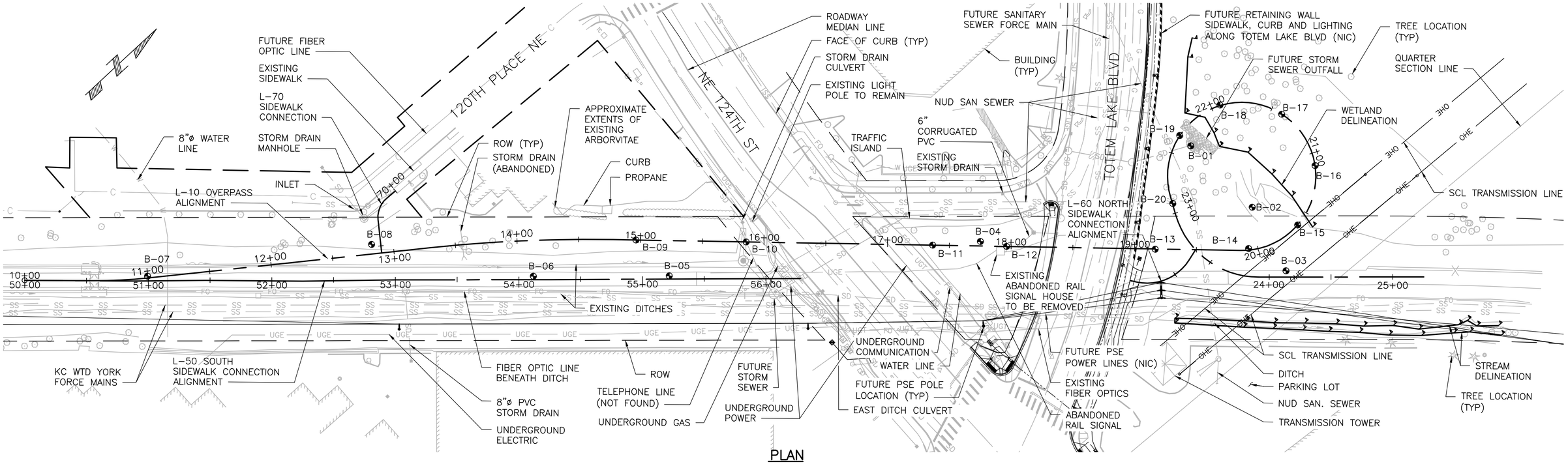

PLAN

SCALE: 1" = 40'

TLC-S-102: BOREHOLE COORDINATES				
HOLE	ELEVATION (NAVD88) (FT)	LOCATION (NAD83)		TOTAL DEPTH (FT)
		NORTHING	EASTING	
B-01	128.51	261723.77	1309792.61	71.5
B-02	129.92	261727.90	1309862.77	71.0
B-03	140.99	261714.16	1309919.44	61.5
B-04	144.48	261545.15	1309737.29	66.5
B-05	146.73	261338.47	1309590.63	31.5
B-06	147.61	261256.19	1309517.75	21.5
B-07	150.47	261022.93	1309310.13	21.5

TLC-S-102: BOREHOLE COORDINATES				
HOLE	ELEVATION (NAVD88) (FT)	LOCATION (NAD83)		TOTAL DEPTH (FT)
		NORTHING	EASTING	
B-08	159.51	261175.51	1309411.42	51.0
B-09	148.06	261337.75	1309551.07	61.5
B-10	144.94	261403.03	1309611.46	66.5
B-11	144.99	261514.27	1309713.74	71.5
B-12	143.37	261558.39	1309754.33	71.5
B-13	139.54	261646.62	1309835.71	81.0
B-14	135.80	261703.44	1309885.87	81.5

TLC-S-102: BOREHOLE COORDINATES				
HOLE	ELEVATION (NAVD88) (FT)	LOCATION (NAD83)		TOTAL DEPTH (FT)
		NORTHING	EASTING	
B-15	127.21	261745.80	1309898.00	81.0
B-16	125.22	261788.14	1309871.36	81.0
B-17	124.27	261796.19	1309821.39	80.5
B-18	124.80	261763.93	1309783.85	81.0
B-19	129.01	261722.72	1309780.43	71.3
B-20	137.16	261681.91	1309817.80	81.0

LEGEND:

PSE: PUGET SOUND ENERGY

SCL: SEATTLE CITY LIGHT

NUD: NORTHSHORE UTILITY DISTRICT

KC WTD: KING COUNTY WASTEWATER TREATMENT DIVISION

NOTES:

1. FOR GENERAL STRUCTURAL NOTES, SEE DWG TLC-S-101.
2. AZIMUTH IS MEASURED AS A POSITIVE ANGLE CLOCKWISE FROM NORTH.
3. ELEVATIONS AND DIMENSIONS IN THESE PLANS ARE CALCULATED FROM A 2017-2018 FIELD SURVEY BY 1ALLIANCE. THE CONTRACTORS SHALL VERIFY ALL THE DEPENDENT DIMENSIONS IN THE FIELD.
4. THIS INFORMATION HAS BEEN ASSEMBLED ON THE CITY OF KIRKLAND GEOGRAPHIC INFORMATION SYSTEM. DATA PROVIDED HEREIN IS DERIVED FROM A NUMBER OF SOURCES WITH VARYING LEVELS OF ACCURACY. THE CITY OF KIRKLAND DISCLAIMS ALL RESPONSIBILITY FOR THE ACCURACY OR COMPLETENESS OF INFORMATION CONTAINED HEREIN.
5. PROJECT LOCATION: KING COUNTY, SECTION 28, TOWNSHIP 26 NORTH, RANGE 5 EAST, KIRKLAND, WA.
6. VERTICAL DATUM: NAVD88; HORIZ DATUM: NAD83. COORDINATE SYSTEM = WASHINGTON STATE PLANE NORTH.
7. FUTURE WORKS SHOWN ALONG TOTEM LAKE BLVD ARE PART OF THE TOTEM LAKE GATEWAY PROJECT AND ARE EXPECTED TO BE COMPLETED PRIOR TO THE START OF CONSTRUCTION FOR THIS PROJECT.
8. FUTURE STORM SEWER AND OUTFALL ARE PART OF THE COMFORT INN POND STORMWATER BYPASS PROJECT AND MAY BE COMPLETED PRIOR TO THE START OF CONSTRUCTION FOR THIS PROJECT.
9. FUTURE OVERHEAD POWER LINES AND PSE POLES ALONG EAST SIDE OF CKC ROW MAY BE COMPLETED PRIOR TO THE START OF CONSTRUCTION FOR THIS PROJECT.

CITY OF KIRKLAND
DEPARTMENT OF PUBLIC WORKS
123 FIFTH AVENUE KIRKLAND, WA 98033
(425) 587-3800 www.kirklandwa.gov

NO.	DATE	BY	APPR.	REVISION
0	2019/12/06	CHJS	MWBM	ISSUE FOR BID

MATTHEW D. BAUGHMAN — STATE OF WASHINGTON — REGISTERED PROFESSIONAL ENGINEER — 2019 DEC 6

COWI

SCVA	2019/12/06
DESIGNED BY:	DATE
CHJS	2019/12/06
DRAWN BY:	DATE
MWBM	2019/12/06
CHECKED BY:	DATE

CITY OF KIRKLAND
TOTEM LAKE CONNECTION

SITE PLAN

SHEET: TLC-S-102

SCALE: AS SHOWN

FILENAME: A088367-S-102.dwg

File: D:\projectwise\cowi\dd301252\A088367-S-102.dwg Save Date: Nov 06, 2019 8:49 AM Saved By: CHJS

TLC–S–103 TABLE 1: L–10 CURVES GEOMETRY				
POINT	STATION	TYPE	NORTHING	EASTING
1	10+00.00	BP	260946.48	1309246.46
2	10+55.53	TC	260987.77	1309283.60
3	11+00.22	CT	261022.57	1309311.60
4	13+29.01	TC	261208.73	1309444.60
5	14+77.76	CT	261324.07	1309538.38
6	19+85.60	TC	261697.50	1309882.57
7	22+86.41	CT	261683.96	1309812.69
8	23+01.37	TC	261677.54	1309826.21
9	23+91.56	CT	261694.30	1309908.60
10	25+25.00	EP	261794.10	1309997.18

TLC–S–103 TABLE 2: L–10 SUPERELEVATION			
POINT	STATION	LH	RH
1	10+00	MATCH EXISTING	
2	10+50	+1.5%	–1.5%
3	14+84.77	+1.5%	–1.5%
4	14+86.77	+1.0%	–1.0%
5	14+94.77	–1.0%	–1.0%
6	19+16.44	–1.0%	–1.0%
7	19+36.44	0%	0%
8	19+86.44	–1.5%	+1.5%
9	24+75	–1.5%	+1.5%
10	25+25	MATCH EXISTING	

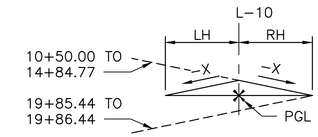

SUPERELEVATION

SCALE: NTS

LEGEND:

BP: BEGINNING POINT
EP: END POINT
CT: CURVE TO TANGENT
CC: CURVE TO CURVE
ROW: RIGHT–OF–WAY
PVI: POINT OF VERTICAL INTERSECTION
LVC: LENGTH OF VERTICAL CURVE
R: RADIUS OF CURVE
BVC: BEGIN VERTICAL CURVE
EVC: END VERTICAL CURVE

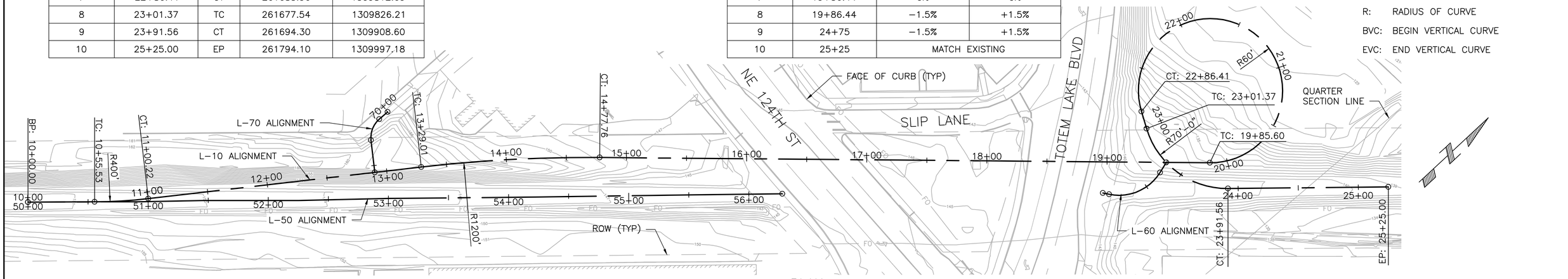

PLAN

SCALE: 1" = 40'

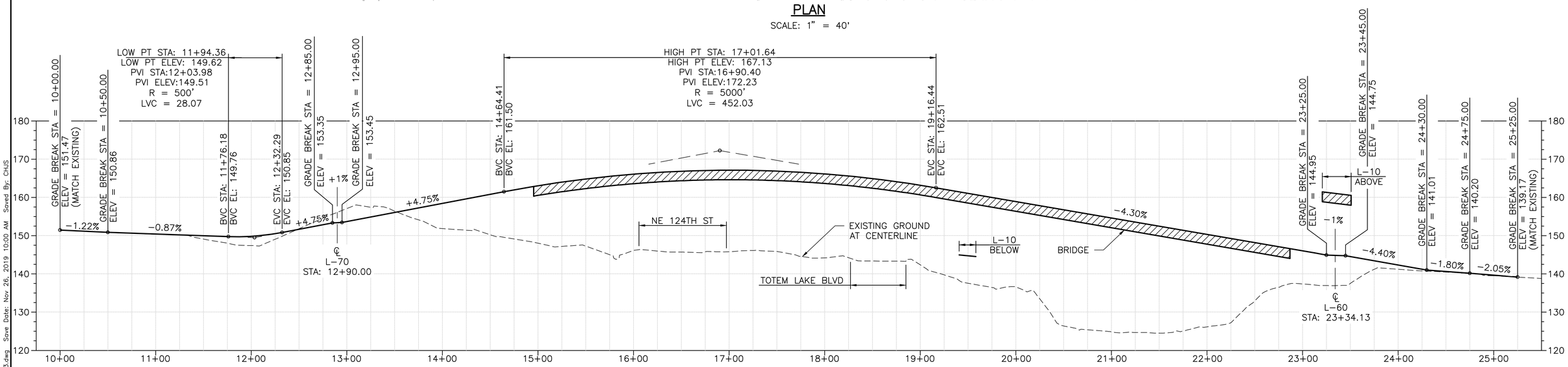

L–10 ALIGNMENT – ELEVATION

SCALE: H: 1" = 50', V: 1" = 12.5'

NOTES:

1. FOR GENERAL STRUCTURAL NOTES SEE DWG TLC–S–101.

File: D:\projectwise\cow\d0301232\A088367-S-103.dwg Save Date: Nov 26, 2019 10:00 AM Saved By: CHJS

CITY OF KIRKLAND
DEPARTMENT OF PUBLIC WORKS
123 FIFTH AVENUE KIRKLAND, WA 98033
(425) 587-3800 www.kirklandwa.gov

NO.	DATE	BY	APPR.	REVISION
0	2019/12/06	CHJS	MWBM	ISSUE FOR BID

MATTHEW D. BAUGHMAN
STATE OF WASHINGTON
STRUCTURAL ENGINEER
PROFESSIONAL ENGINEER
2019 DEC 06

COWI

SCVA 2019/12/06
DESIGNED BY: DATE
CHJS 2019/12/06
DRAWN BY: DATE
MWBM 2019/12/06
CHECKED BY: DATE

CITY OF KIRKLAND
TOTEM LAKE CONNECTION

ALIGNMENT & PROFILE GEOMETRY – SHEET 1

SHEET: TLC–S–103
SCALE: AS SHOWN
FILENAME: A088367–S–103.dwg

TLC–S–104 TABLE 1: L–60 CURVES GEOMETRY				
POINT	STATION	TYPE	NORTHING	EASTING
1	60+12.04	BP	261614.67	1309841.44
2	60+17.25	TC	261617.71	1309845.67
3	60+66.38	CT	261661.29	1309860.70
4	60+76.27	EP	261670.79	1309857.95

TLC–S–104 TABLE 2: L–70 CURVES GEOMETRY				
POINT	STATION	TYPE	NORTHING	EASTING
1	70+00.00	BP	261218.63	1309391.85
2	70+09.13	TC	261209.50	1309391.59
3	70+28.69	CT	261192.68	1309399.96
4	70+55.73	EP	261176.96	1309421.96

NOTES:

1. FOR GENERAL STRUCTURAL NOTES SEE DWG TLC–S–101.

LEGEND:

BP: BEGINNING POINT
EP: END POINT
CT: CURVE TO TANGENT
CC: CURVE TO CURVE
ROW: RIGHT–OF–WAY
PVI: POINT OF VERTICAL INTERSECTION
LVC: LENGTH OF VERTICAL CURVE
R: RADIUS OF CURVE
BVC: BEGIN VERTICAL CURVE
EVC: END VERTICAL CURVE

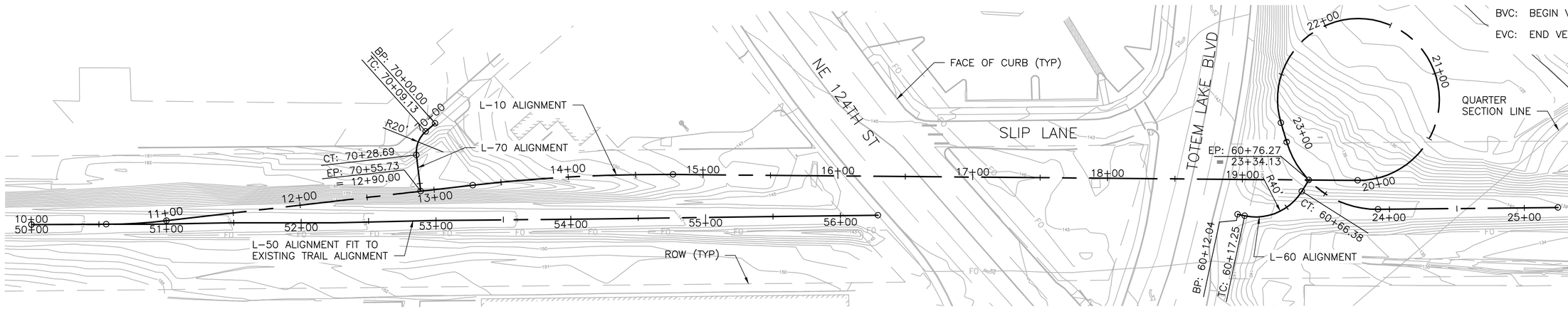

PLAN

SCALE: 1" = 40'

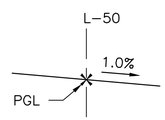

L–50 SUPERELEVATION

SCALE: NTS

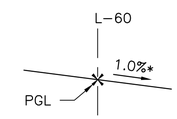

L–60 SUPERELEVATION

SCALE: NTS

* ADJUST SUPERELEVATION AT TIE–INS TO MATCH EXISTING SIDEWALKS AND PROPOSED L–10. RATE OF SUPERELEVATION CHANGE NOT TO EXCEED 1% PER 10 LF

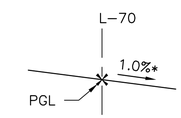

L–70 SUPERELEVATION

SCALE: NTS

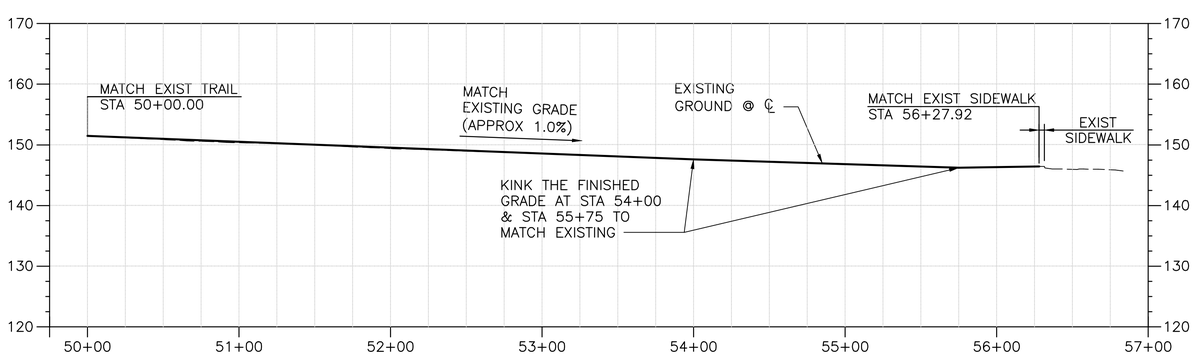

L–50 ALIGNMENT – ELEVATION

SCALE: H: 1" = 50', V: 1" = 12.5'
(FIELD FIT)

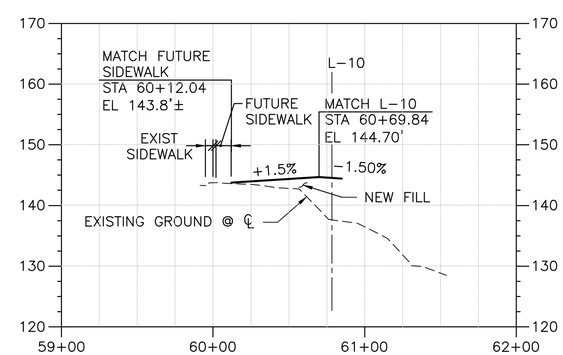

L–60 ALIGNMENT – ELEVATION

SCALE: H: 1" = 50', V: 1" = 12.5'
(FIELD FIT)

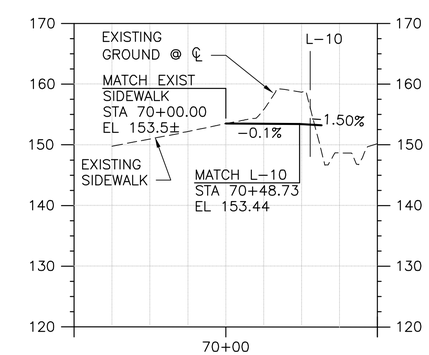

L–70 ALIGNMENT – ELEVATION

SCALE: H: 1" = 50', V: 1" = 12.5'
(FIELD FIT)

File: D:\projectwise\cow\d0301252\A088367-S-104.dwg Save Date: Nov 26, 2019 3:22 PM Saved By: CHJS

CITY OF KIRKLAND
DEPARTMENT OF PUBLIC WORKS
123 FIFTH AVENUE KIRKLAND, WA 98033
(425) 587-3800 www.kirklandwa.gov

NO.	DATE	BY	APPR.	REVISION
0	2019/12/06	CHJS	MWBM	ISSUE FOR BID

MATTHEW D. BAUGHMAN — STATE OF WASHINGTON — PROFESSIONAL ENGINEER
2019 DEC 06

COWI

SCVA	2019/12/06	DESIGNED BY: DATE
CHJS	2019/12/06	DRAWN BY: DATE
MWBM	2019/12/06	CHECKED BY: DATE

CITY OF KIRKLAND
TOTEM LAKE CONNECTION

ALIGNMENT & PROFILE GEOMETRY – SHEET 2

SHEET: TLC–S–104
SCALE: AS SHOWN
FILENAME: A088367–S–104.dwg

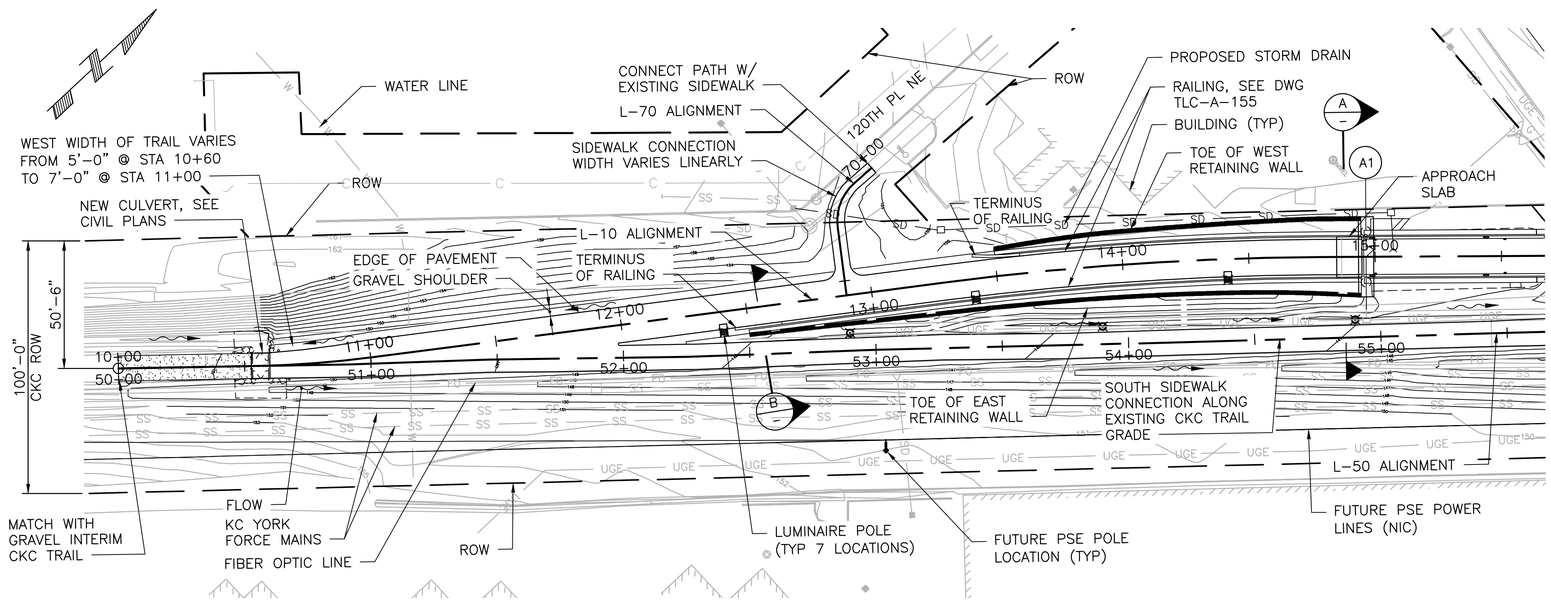

PLAN

SCALE: 1" = 30'

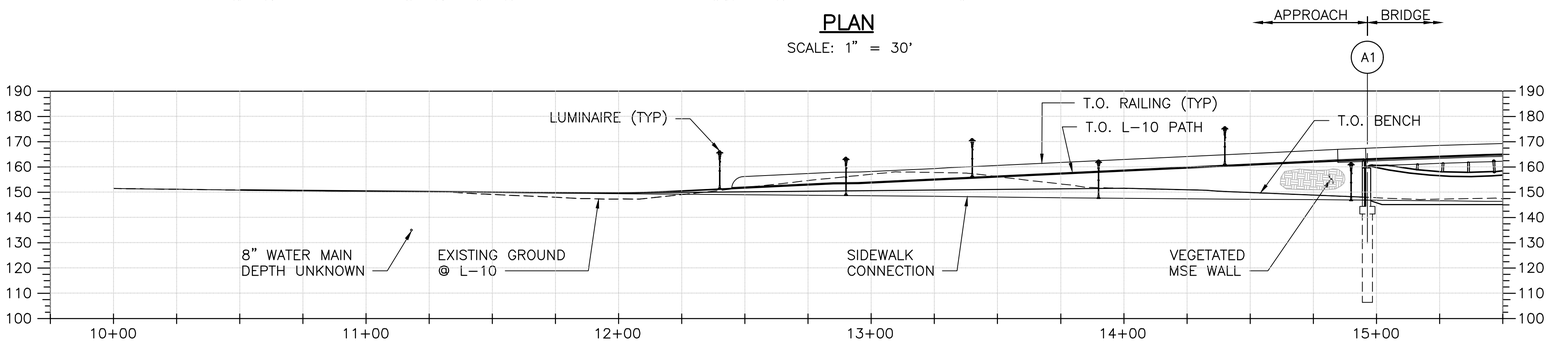

EAST WALL ELEVATION

SCALE: 1" = 30'

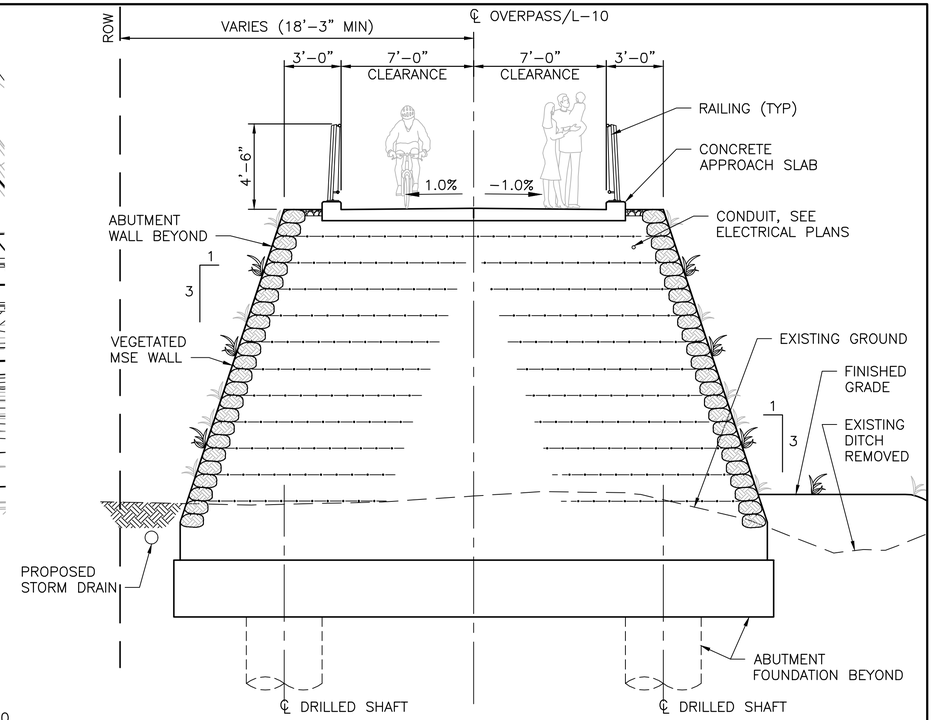

SECTION A

SCALE: ¼" = 1'-0"

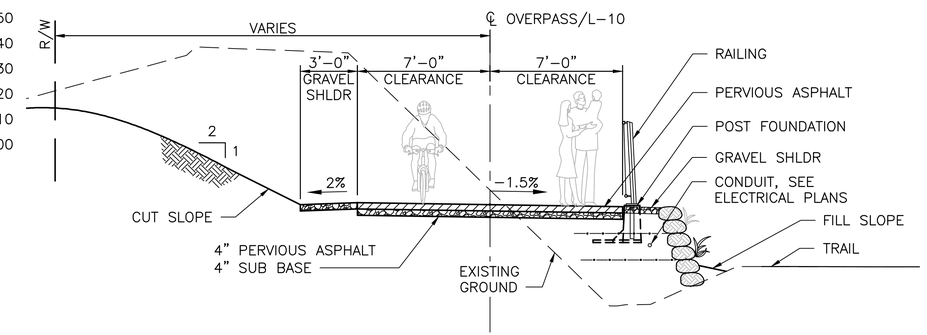

SECTION B

SCALE: ¼" = 1'-0"

TLC-S-105 TABLE 1: PAVEMENT/GRAVEL INTERFACE LOCATIONS *
STATION
10+52.67 / 50+52.67 **
24+75
70+40

* SEE PAVED SURFACE TRANSITION DETAIL ON DWG TLC-S-115.

** SEE DWG TLC-C-197.

TLC-S-105 TABLE 2: LUMINAIRE LOCATIONS	
STATION	OFFSET
12+40 *	8'-3" RT
13+40.75 *	8'-3" RT
14+41.5 *	8'-3" RT
52+90	7'-0" LT
53+90	7'-0" LT
54+90	7'-0" LT
55+93	7'-0" LT

* ADJUST AS REQUIRED TO AVOID CONFLICT WITH RAILING FOOTING.

NOTES:

1. FOR GENERAL STRUCTURAL NOTES, SEE DRAWING TLC-S-101.
2. GRAVEL SHOULDERS SHALL BE 4" THICK CRUSHED SURFACE TOP COURSE.

CITY OF KIRKLAND
DEPARTMENT OF PUBLIC WORKS
123 FIFTH AVENUE KIRKLAND, WA 98033
(425) 587-3800 www.kirklandwa.gov

NO.	DATE	BY	APPR.	REVISION
0	2019/12/06	CHJS	MWBM	ISSUE FOR BID

MATTHEW D. BAUGHMAN — STATE OF WASHINGTON — STRUCTURAL ENGINEER — PROFESSIONAL ENGINEER — 2019 DEC 06

COWI

SCVA DESIGNED BY:	2019/12/06 DATE
CHJS DRAWN BY:	2019/12/06 DATE
MWBM CHECKED BY:	2019/12/06 DATE

CITY OF KIRKLAND
TOTEM LAKE CONNECTION

GENERAL ARRANGEMENT – SHEET 1

SHEET: TLC-S-105
SCALE: AS SHOWN
FILENAME: A088367-S-105.dwg

File: D:\projectwise\cowi\00301252\A088367-S-105.dwg Save Date: Dec 05, 2019 11:39 AM Saved By: CHJS

NOTES:

1. FOR GENERAL STRUCTURAL NOTES, SEE DWG TLC–S–101.
2. VERTICAL CLEARANCE OVER SIDEWALKS IS 10'–0" MIN.

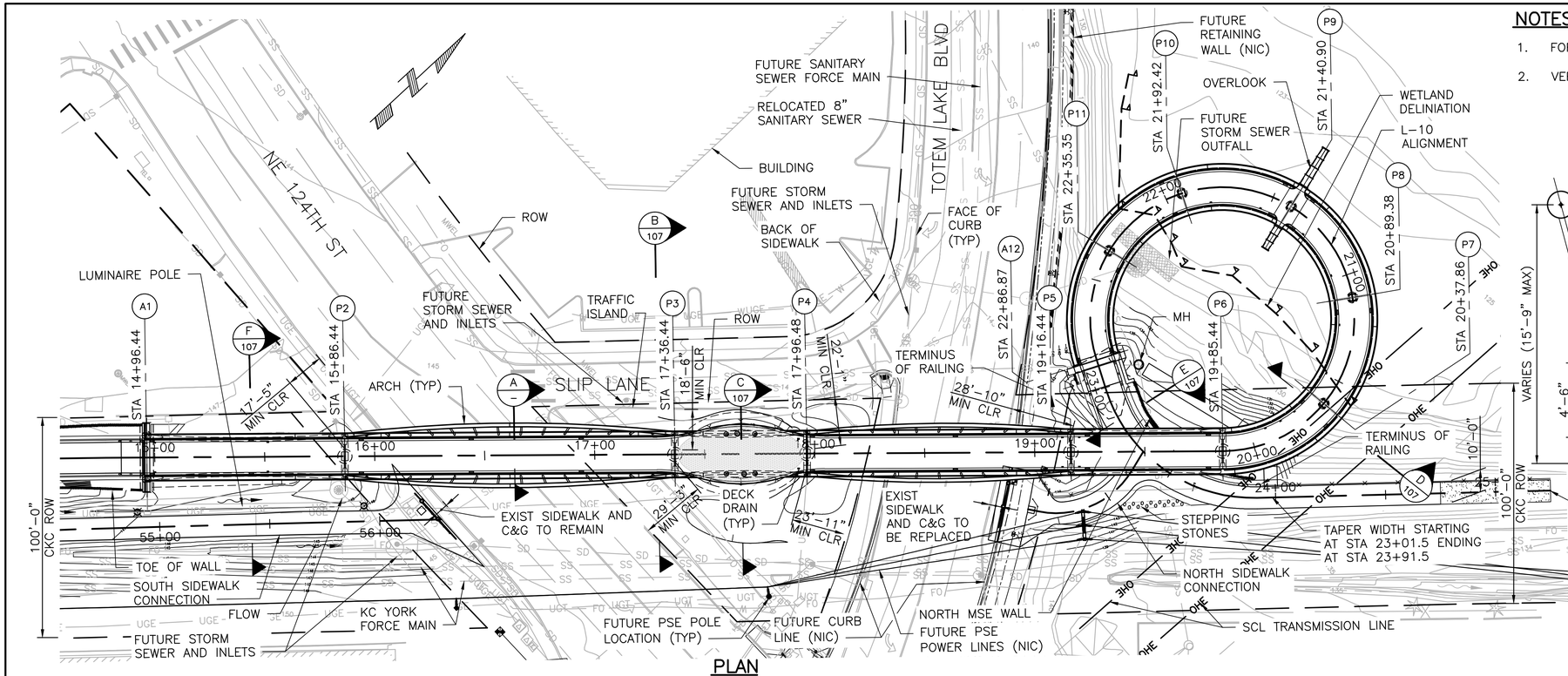

PLAN

SCALE: 1" = 30'

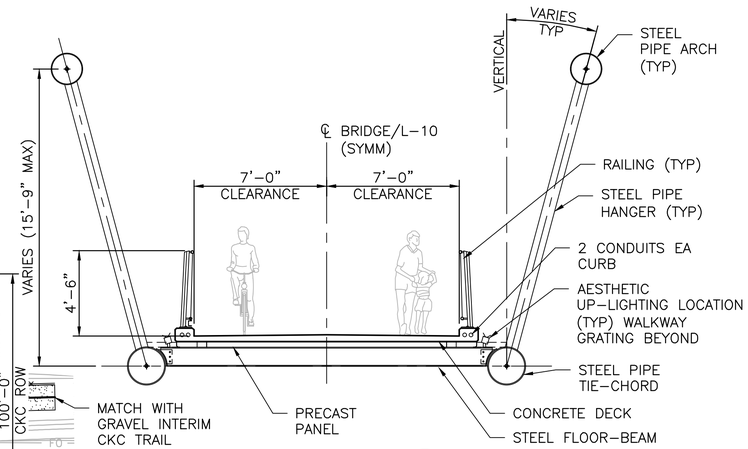

SECTION A

SCALE: ¼" = 1'–0"
(SPANS 2 & 4)

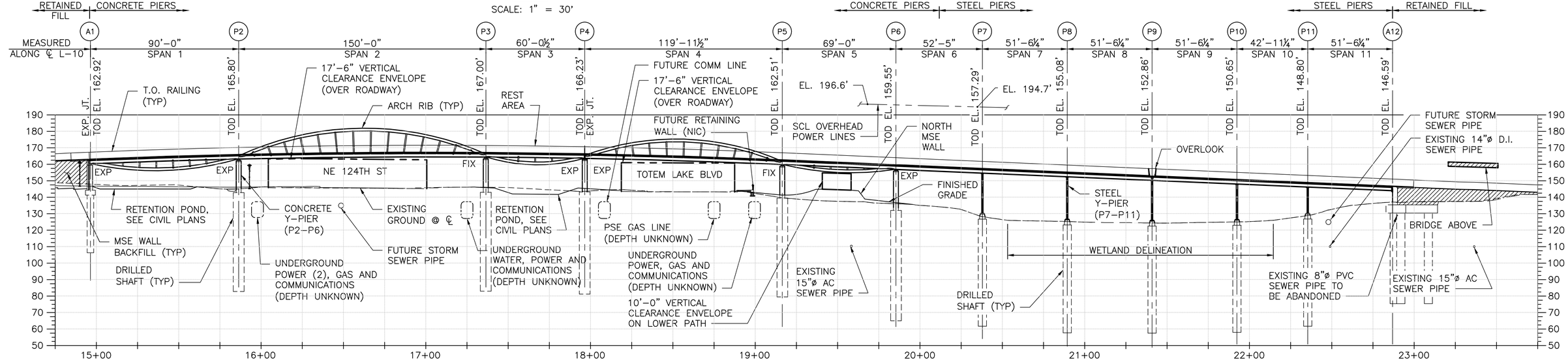

DEVELOPED ELEVATION

SCALE: 1" = 30'

CITY OF KIRKLAND
DEPARTMENT OF PUBLIC WORKS
123 FIFTH AVENUE KIRKLAND, WA 98033
(425) 587-3800 www.kirklandwa.gov

NO.	DATE	BY	APPR.	REVISION
0	2019/12/06	CHJS	MWBM	ISSUE FOR BID

MATTHEW D. BAUGHMAN, STATE OF WASHINGTON, STRUCTURAL ENGINEER, PROFESSIONAL ENGINEER — 2019 DEC 06

COWI

SCVA 2019/12/06 — DESIGNED BY: DATE
CHJS 2019/12/06 — DRAWN BY: DATE
MWBM 2019/12/06 — CHECKED BY: DATE

CITY OF KIRKLAND
TOTEM LAKE CONNECTION

GENERAL ARRANGEMENT – SHEET 2

SHEET: TLC–S–106
SCALE: AS SHOWN
FILENAME: A088367–S–106.dwg

File: D:\projectwise\cow\d0301252\A088367-S-106.dwg Save Date: Dec 23, 2019 9:13 AM Saved By: CHJS

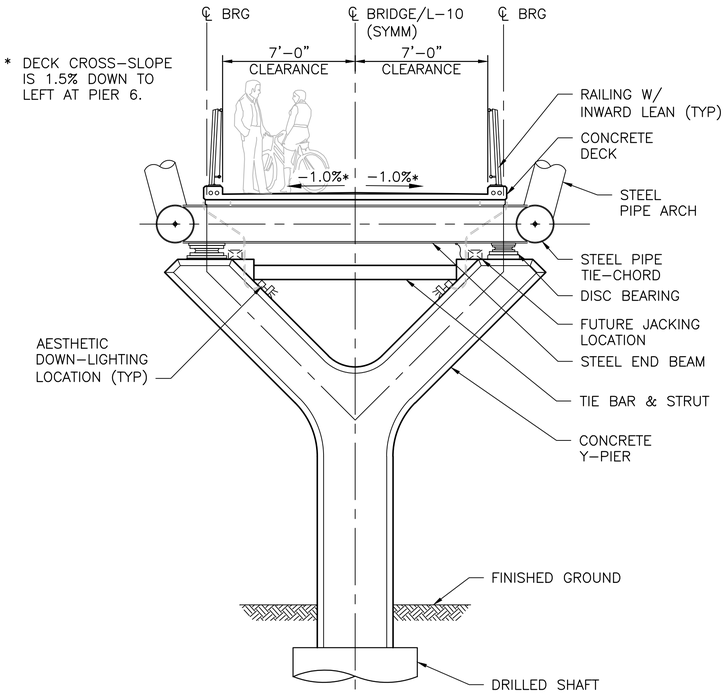

SECTION B 106
SCALE: ¼" = 1'-0"
(PIER 3 SHOWN, PIERS 2, 4, 5 & 6 SIMILAR)

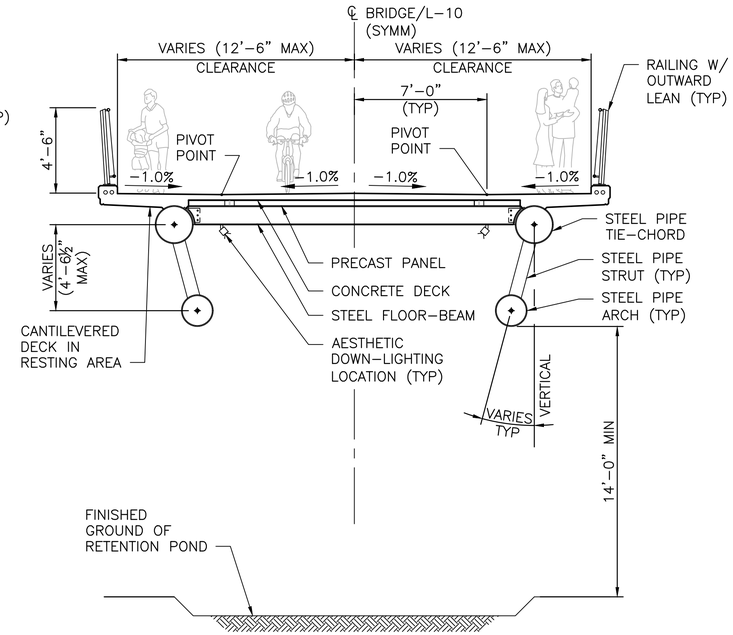

SECTION C 106
SCALE: ¼" = 1'-0"
(SPAN 3)

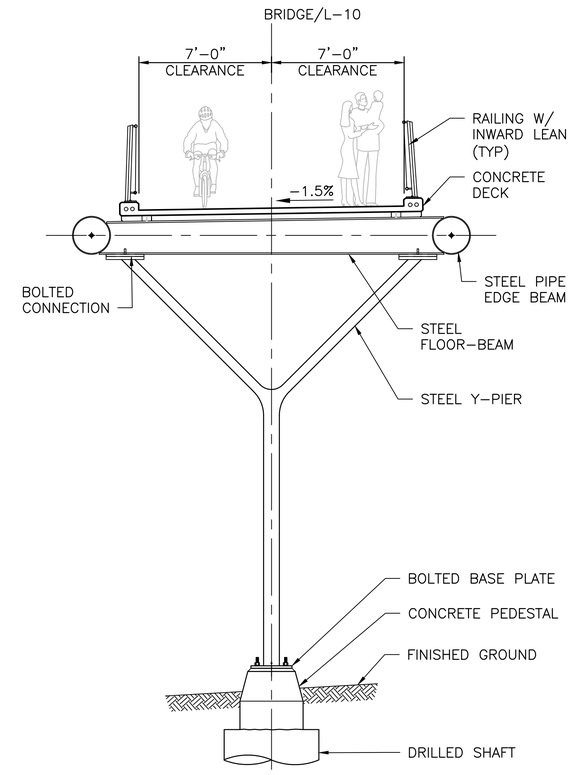

SECTION D 106
SCALE: ¼" = 1'-0"
(SPANS 7-11)

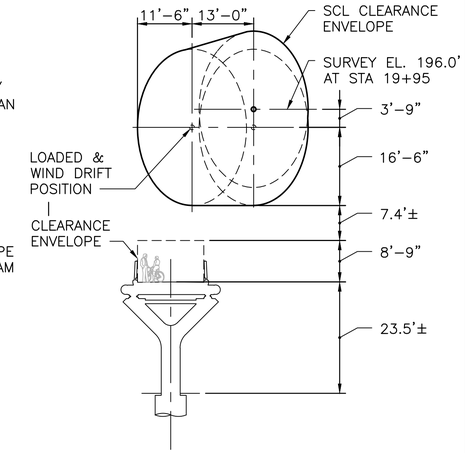

SCL OVERHEAD POWER CLEARANCE AT PIER 6
SCALE: NTS

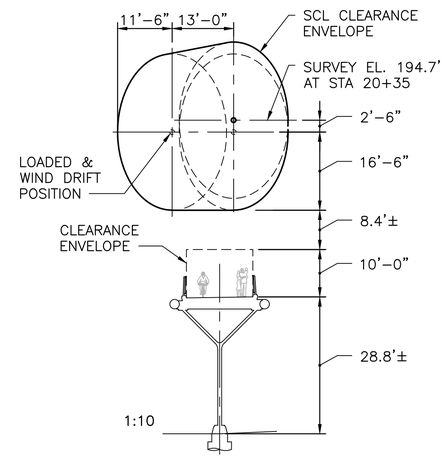

SCL OVERHEAD POWER CLEARANCE NEAR PIER 7
SCALE: NTS

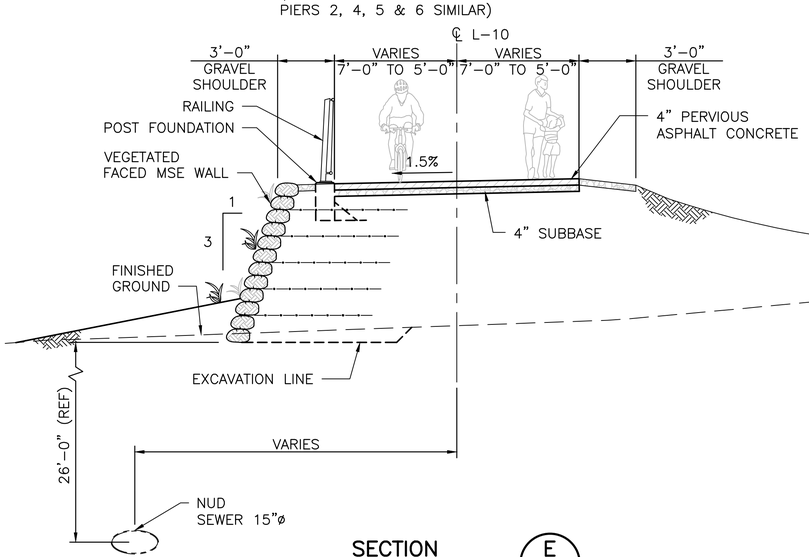

SECTION E 106
SCALE: ¼" = 1'-0"
(NORTH MSE WALL)

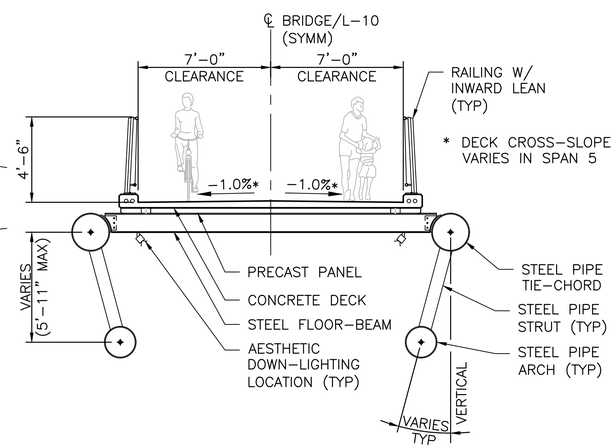

SECTION F 106
SCALE: ¼" = 1'-0"
(SPAN 1 SHOWN, SPAN 5 SIMILAR)

NOTES:

1. FOR GENERAL STRUCTURAL NOTES SEE DWG TLC-S-101.

CITY OF KIRKLAND
DEPARTMENT OF PUBLIC WORKS
123 FIFTH AVENUE KIRKLAND, WA 98033
(425) 587-3800 www.kirklandwa.gov

NO.	DATE	BY	APPR.	REVISION
0	2019/12/06	CHJS	MWBM	ISSUE FOR BID

MATTHEW D. BAUGHMAN — STATE OF WASHINGTON — PROFESSIONAL ENGINEER
2019 DEC 06

COWI

SCVA DESIGNED BY:	2019/12/06 DATE
CHJS DRAWN BY:	2019/12/06 DATE
MWBM CHECKED BY:	2019/12/06 DATE

CITY OF KIRKLAND
TOTEM LAKE CONNECTION

GENERAL ARRANGEMENT – SHEET 3

SHEET: TLC-S-107
SCALE: AS SHOWN
FILENAME: A088367-S-107.dwg

File: D:\Projectwise\COWI\dd301252\A088367-S-107.dwg Save Date: Nov 26, 2019 1:21 PM Saved By: CHJS

LEGEND:

1. EXISTING GROUND
2. PERVIOUS ASPHALT W/ SUB BASE
3. MAINTAIN EXISTING GRAVEL SIDEWALK CONNECTION
4. DITCH
5. GRADING NEAR WEST SIDEWALK CONNECTION
6. FILL SLOPE 2H:1V
7. BENCH
8. VEGETATED WALL 1H:3V
9. RAILING W/ FOOTING
10. CUT SLOPE 2H:1V BLENDED INTO EXISTING GRADE
11. NOT USED
12. EXISTING CURB
13. GRAVEL SHOULDER
14. NOT USED
15. MSE GEOGRID REINFORCEMENT
16. EXCAVATION LINE
17. LIGHT POWER CABLE
18. STORM SEWER PIPE
19. ACCESS TRAIL

NOTES:

1. FOR GENERAL STRUCTURAL NOTES SEE DWG TLC–S–101.
2. FUTURE SANITARY SEWER FORCE MAIN AND FUTURE PSE POWER LINES NOT SHOWN.

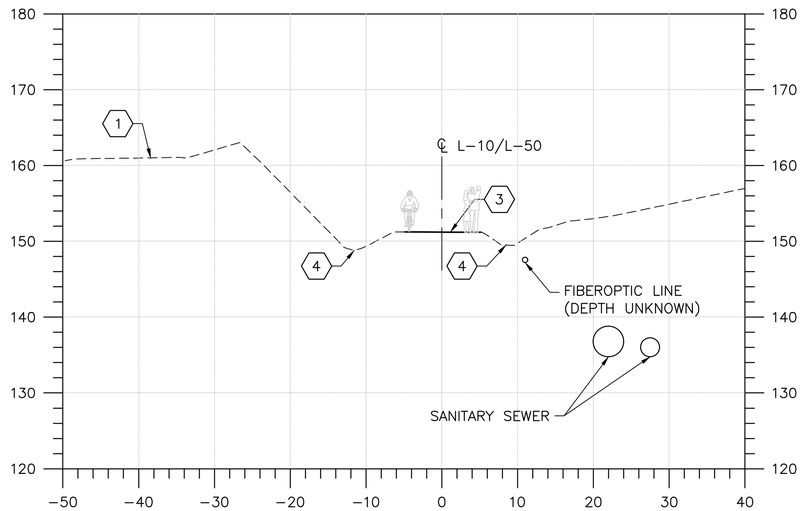

STA 10+20

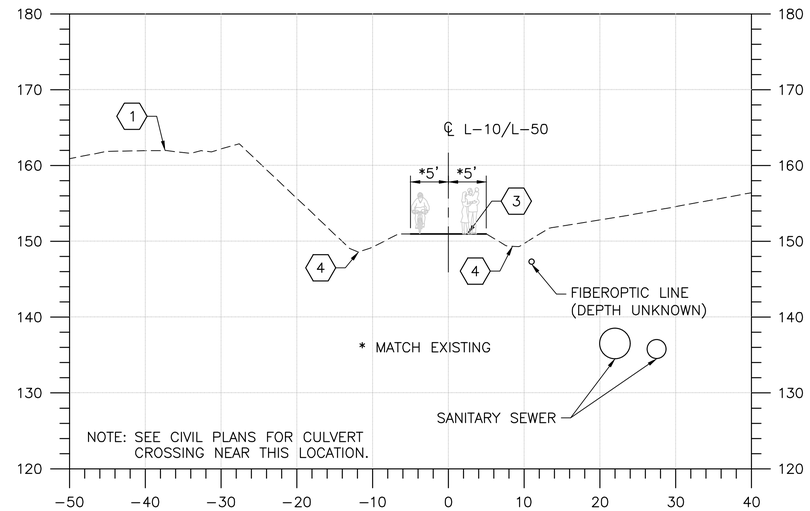

STA 10+40

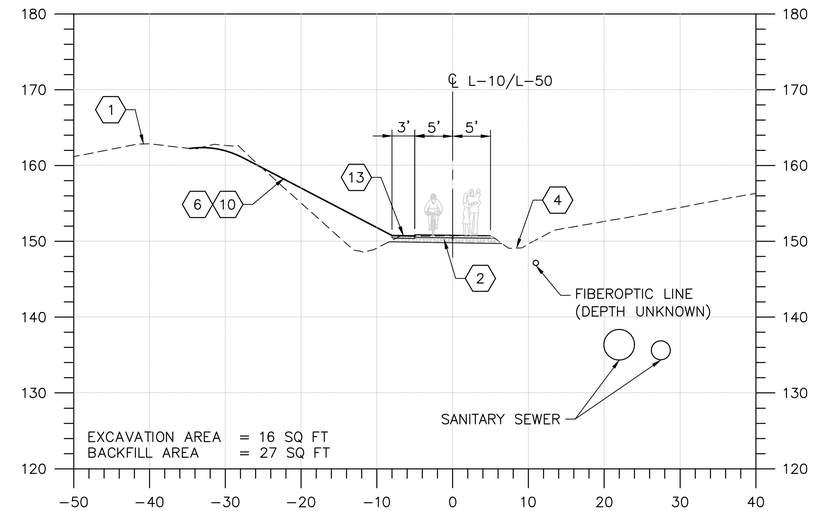

STA 10+60

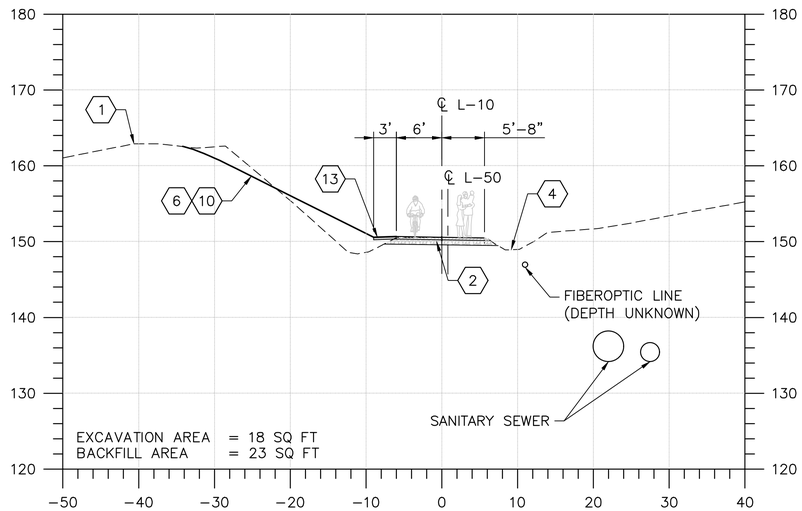

STA 10+80

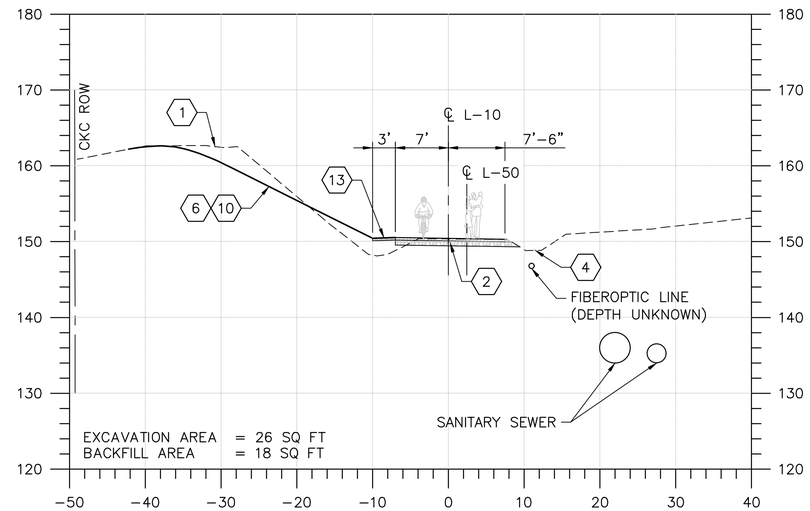

STA 11+00

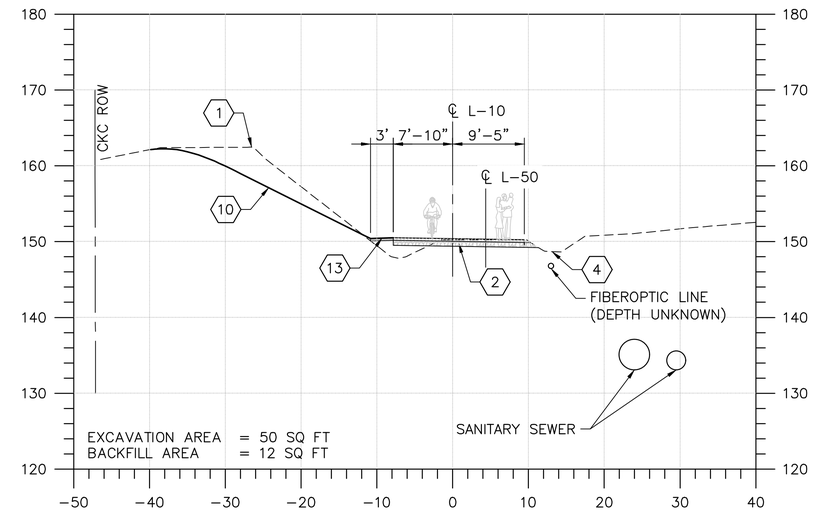

STA 11+20

SOUTH WALL SECTIONS

SCALE: 1" = 10'

CITY OF KIRKLAND
DEPARTMENT OF PUBLIC WORKS
123 FIFTH AVENUE KIRKLAND, WA 98033
(425) 587-3800 www.kirklandwa.gov

NO.	DATE	BY	APPR.	REVISION
0	2019/12/06	CHJS	MWBM	ISSUE FOR BID

MATTHEW D. BAUGHMAN, STATE OF WASHINGTON, PROFESSIONAL ENGINEER, 2019 DEC 06

COWI

SCVA	2019/12/06	DESIGNED BY: DATE
CHJS	2019/12/06	DRAWN BY: DATE
MWBM	2019/12/06	CHECKED BY: DATE

CITY OF KIRKLAND
TOTEM LAKE CONNECTION

SOUTH MSE WALL SECTIONS – SHEET 1

SHEET: TLC–S–108
SCALE: AS SHOWN
FILENAME: A088367–S–108–113.dwg

File: D:\projectwise\cow\d0301252\A088367-S-108-113.dwg Save Date: Nov 11, 2019 2:00 PM Saved By: CHJS

LEGEND:

1. EXISTING GROUND
2. PERVIOUS ASPHALT W/ SUB BASE
3. MAINTAIN EXISTING GRAVEL SIDEWALK CONNECTION
4. DITCH
5. GRADING NEAR WEST SIDEWALK CONNECTION
6. FILL SLOPE 2H:1V
7. BENCH
8. VEGETATED WALL 1H:3V
9. RAILING W/ FOOTING
10. CUT SLOPE 2H:1V BLENDED INTO EXISTING GRADE
11. NOT USED
12. EXISTING CURB
13. GRAVEL SHOULDER
14. NOT USED
15. MSE GEOGRID REINFORCEMENT
16. EXCAVATION LINE
17. LIGHT POWER CABLE
18. STORM SEWER PIPE
19. ACCESS TRAIL

NOTES:

1. FOR GENERAL STRUCTURAL NOTES SEE DWG TLC–S–101.
2. FUTURE SANITARY SEWER FORCE MAIN AND FUTURE PSE POWER LINES NOT SHOWN.

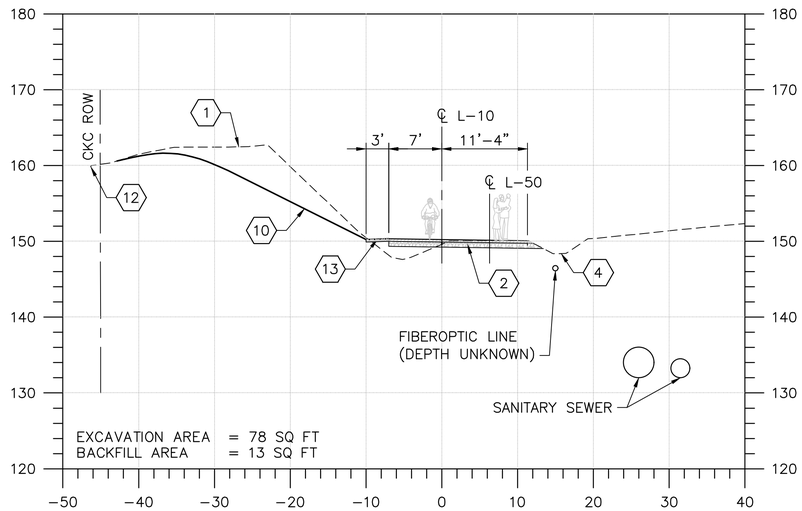

STA 11+40

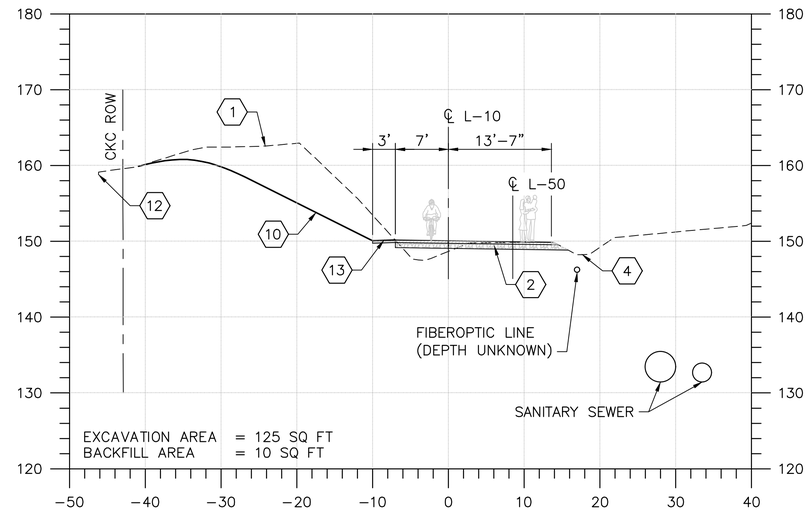

STA 11+60

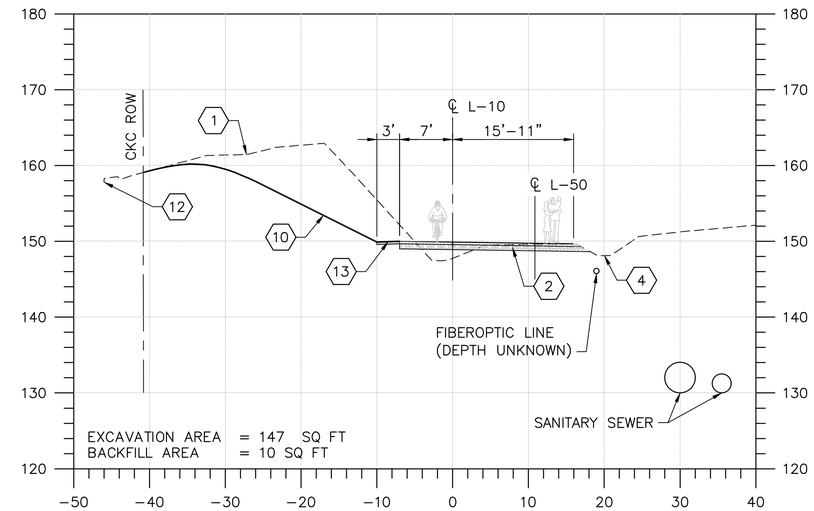

STA 11+80

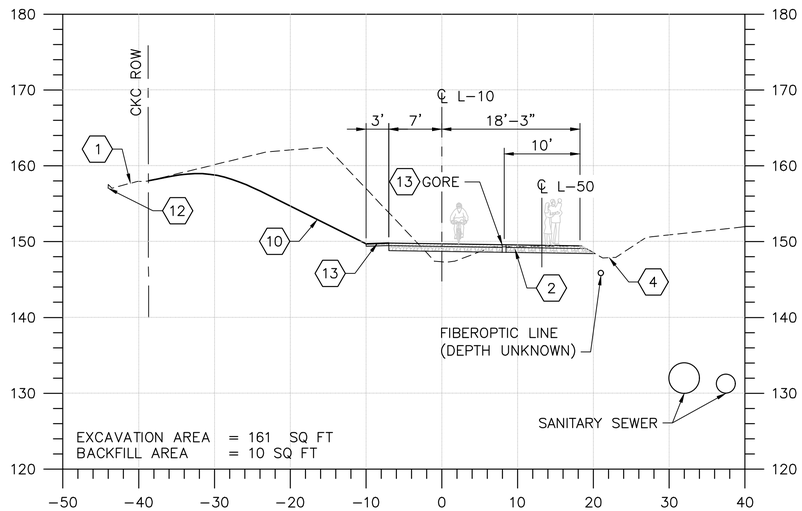

STA 12+00

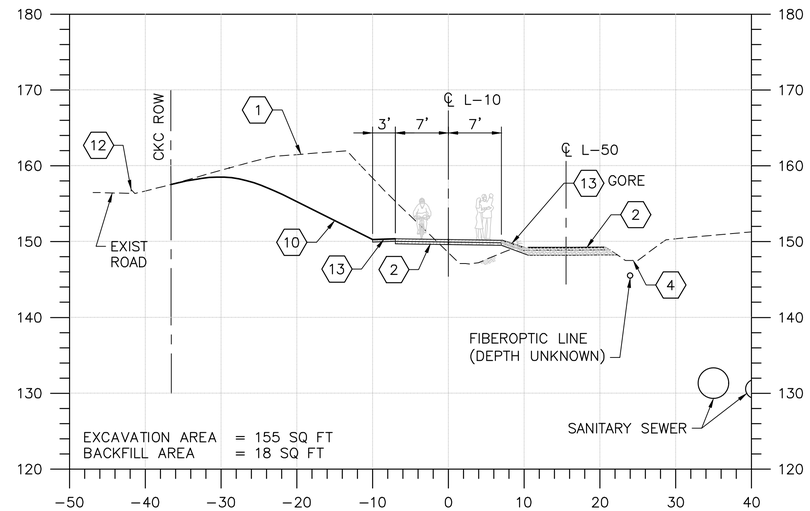

STA 12+20

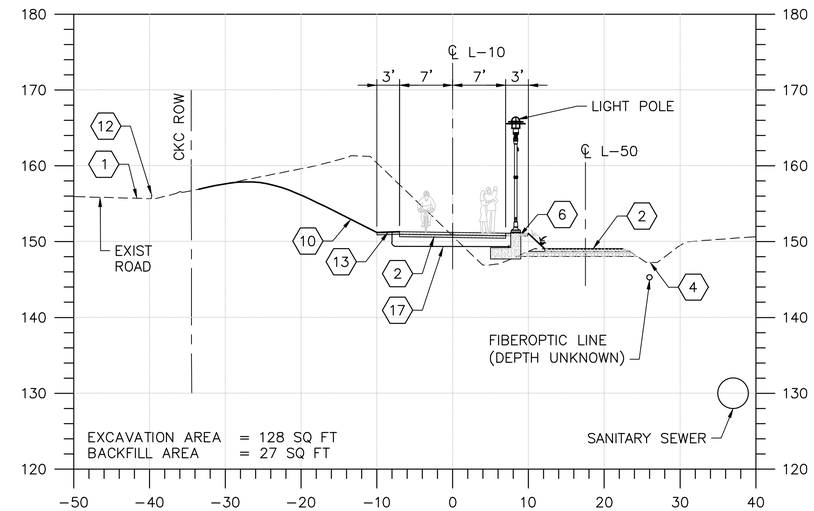

STA 12+40

SOUTH WALL SECTIONS

SCALE: 1" = 10'

CITY OF KIRKLAND
DEPARTMENT OF PUBLIC WORKS
123 FIFTH AVENUE KIRKLAND, WA 98033
(425) 587-3800 www.kirklandwa.gov

NO.	DATE	BY	APPR.	REVISION
0	2019/12/06	CHJS	MWBM	ISSUE FOR BID

MATTHEW D. BAUGHMAN — STATE OF WASHINGTON — PROFESSIONAL ENGINEER — 2019 DEC 06

COWI

SCVA DESIGNED BY:	2019/12/06 DATE
CHJS DRAWN BY:	2019/12/06 DATE
MWBM CHECKED BY:	2019/12/06 DATE

CITY OF KIRKLAND
TOTEM LAKE CONNECTION

SOUTH MSE WALL SECTIONS – SHEET 2

SHEET: TLC–S–109
SCALE: AS SHOWN
FILENAME: A088367–S–108–113.dwg

File: D:\projectwise\cow\d0301252\A088367-S-108-113.dwg Save Date: Nov 11, 2019 2:00 PM Saved By: CHJS

LEGEND:

1. EXISTING GROUND
2. PERVIOUS ASPHALT W/ SUB BASE
3. MAINTAIN EXISTING GRAVEL SIDEWALK CONNECTION
4. DITCH
5. GRADING NEAR WEST SIDEWALK CONNECTION
6. FILL SLOPE 2H:1V
7. BENCH
8. VEGETATED WALL 1H:3V
9. RAILING W/ FOOTING
10. CUT SLOPE 2H:1V BLENDED INTO EXISTING GRADE
11. NOT USED
12. EXISTING CURB
13. GRAVEL SHOULDER
14. NOT USED
15. MSE GEOGRID REINFORCEMENT
16. EXCAVATION LINE
17. LIGHT POWER CABLE
18. STORM SEWER PIPE
19. ACCESS TRAIL

NOTES:

1. FOR GENERAL STRUCTURAL NOTES SEE DWG TLC–S–101.
2. FUTURE SANITARY SEWER FORCE MAIN AND FUTURE PSE POWER LINES NOT SHOWN.

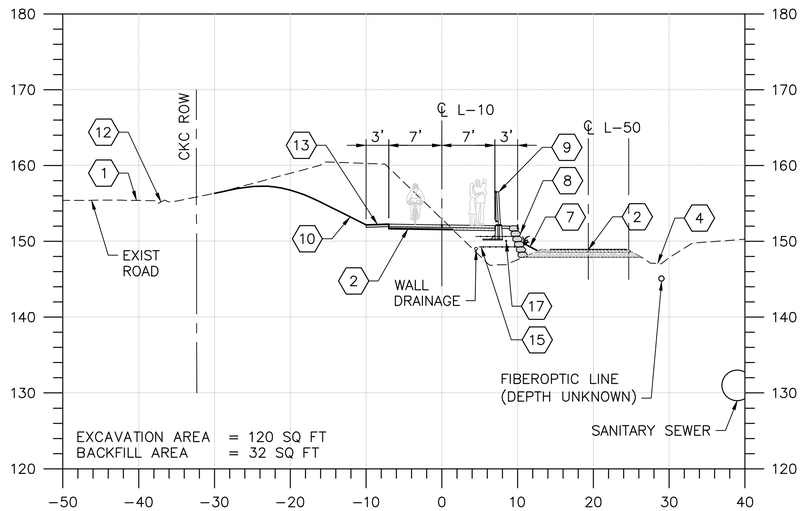

STA 12+60

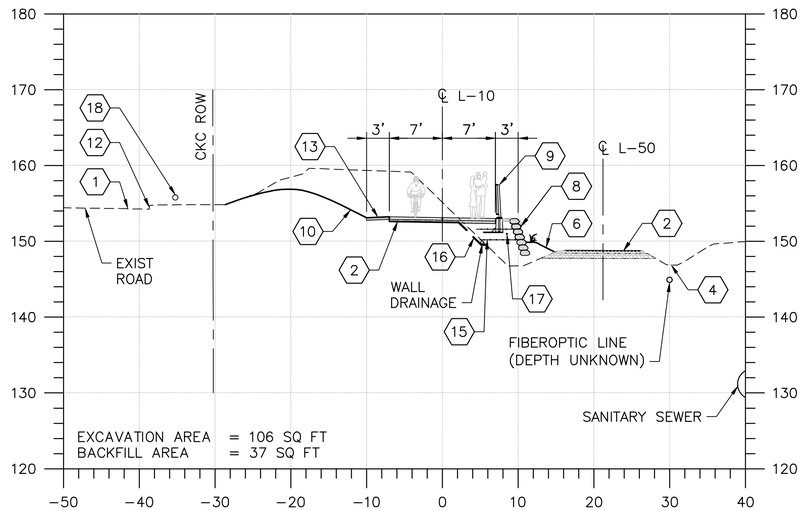

STA 12+80

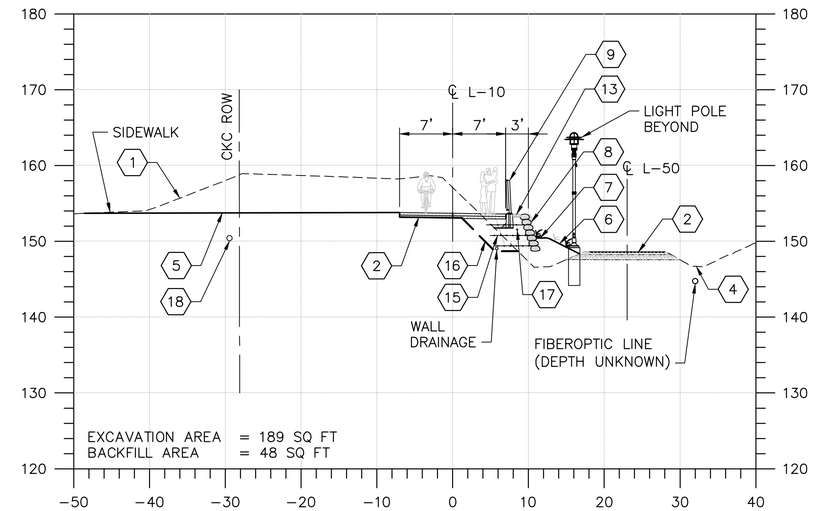

STA 13+00

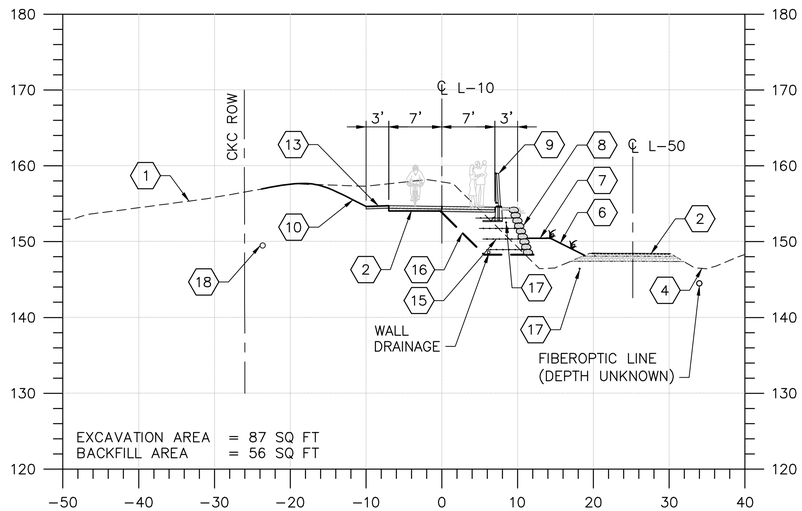

STA 13+20

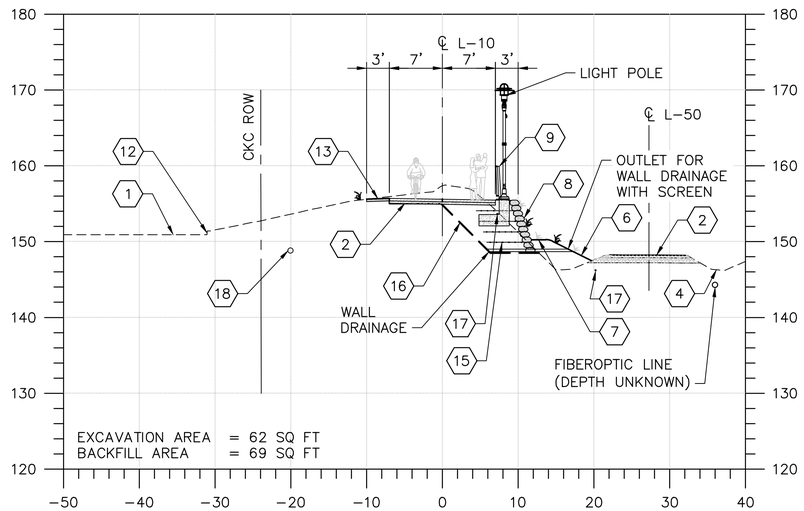

STA 13+40

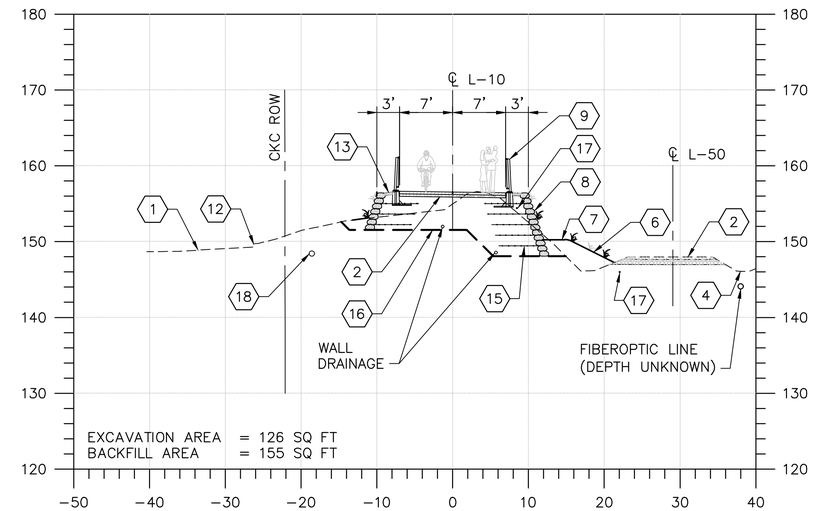

STA 13+60

SOUTH WALL SECTIONS

SCALE: 1" = 10'

CITY OF KIRKLAND
DEPARTMENT OF PUBLIC WORKS
123 FIFTH AVENUE KIRKLAND, WA 98033
(425) 587-3800 www.kirklandwa.gov

NO.	DATE	BY	APPR.	REVISION
0	2019/12/06	CHJS	MWBM	ISSUE FOR BID

MATTHEW D. BAUGHMAN — STATE OF WASHINGTON — PROFESSIONAL ENGINEER — 2019 DEC 06

COWI

SCVA	2019/12/06
DESIGNED BY:	DATE
CHJS	2019/12/06
DRAWN BY:	DATE
MWBM	2019/12/06
CHECKED BY:	DATE

CITY OF KIRKLAND
TOTEM LAKE CONNECTION

SOUTH MSE WALL SECTIONS – SHEET 3

SHEET: TLC–S–110
SCALE: AS SHOWN
FILENAME: A088367–S–108–113.dwg

File: D:\projectwise\cow\d0301252\A088367-S-108-113.dwg Save Date: Nov 11, 2019 2:00 PM Saved By: CHJS

LEGEND:

1. EXISTING GROUND
2. PERVIOUS ASPHALT W/ SUB BASE
3. MAINTAIN EXISTING GRAVEL SIDEWALK CONNECTION
4. DITCH
5. GRADING NEAR WEST SIDEWALK CONNECTION
6. FILL SLOPE 2H:1V
7. BENCH
8. VEGETATED WALL 1H:3V
9. RAILING W/ FOOTING
10. CUT SLOPE 2H:1V BLENDED INTO EXISTING GRADE
11. NOT USED
12. EXISTING CURB
13. GRAVEL SHOULDER
14. NOT USED
15. MSE GEOGRID REINFORCEMENT
16. EXCAVATION LINE
17. LIGHT POWER CABLE
18. STORM SEWER PIPE
19. ACCESS TRAIL

NOTES:

1. FOR GENERAL STRUCTURAL NOTES SEE DWG TLC–S–101.
2. FUTURE SANITARY SEWER FORCE MAIN AND FUTURE PSE POWER LINES NOT SHOWN.

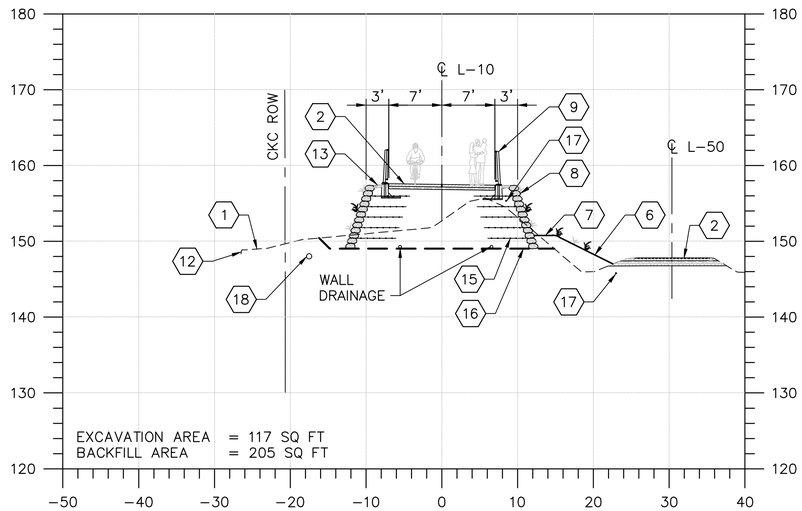

STA 13+80

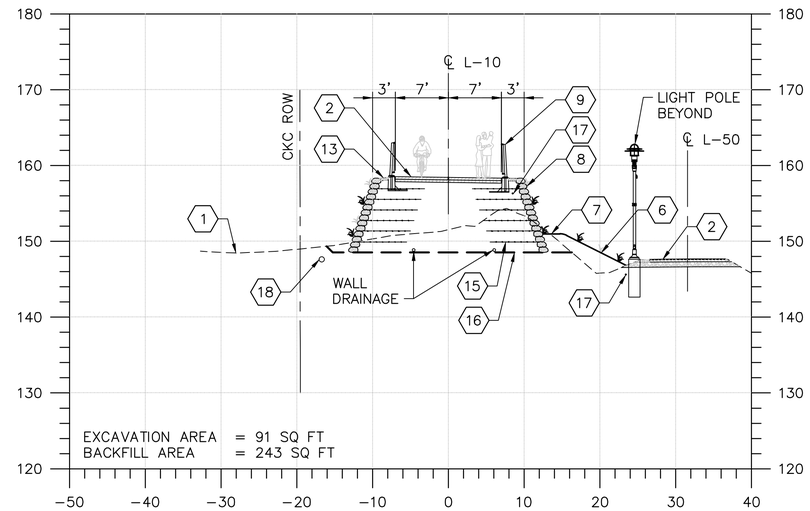

STA 14+00

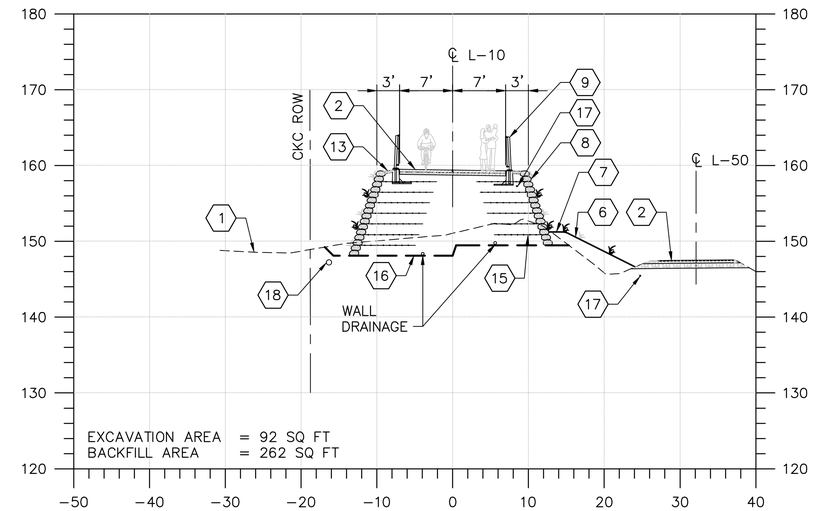

STA 14+20

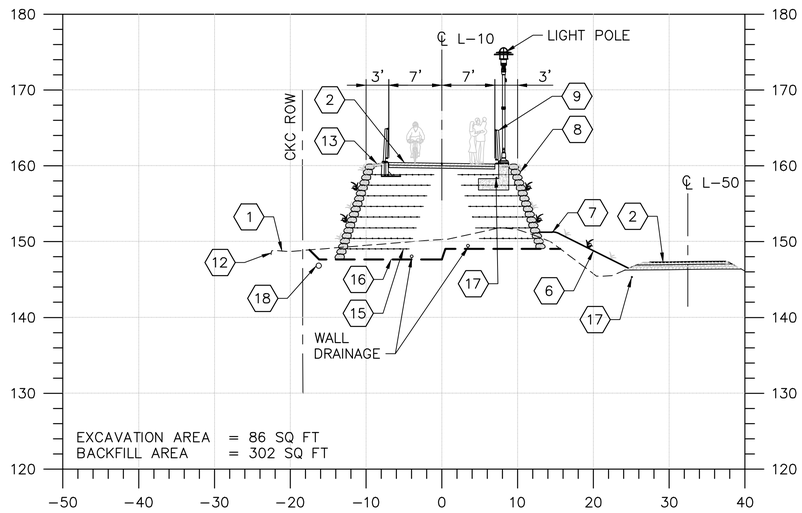

STA 14+40

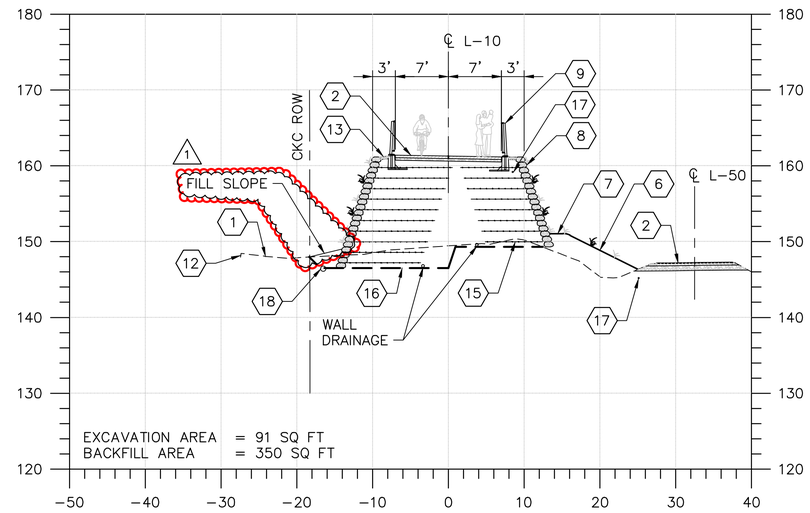

STA 14+60

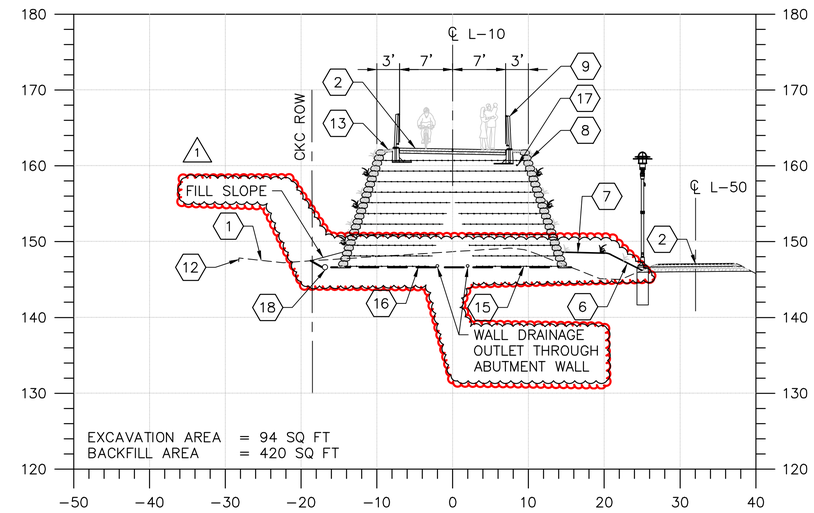

STA 14+80

SOUTH WALL SECTIONS

SCALE: 1" = 10'

File: C:\pwwork\dkiyw2\d0301252\A088367-S-108-113.dwg Save Date: Mar 10, 2020 4:00 PM Saved By: KNBR

CITY OF KIRKLAND
DEPARTMENT OF PUBLIC WORKS
123 FIFTH AVENUE KIRKLAND, WA 98033
(425) 587-3800 www.kirklandwa.gov

NO.	DATE	BY	APPR.	REVISION
1	2020/03/09	MKAL	MWBM	ADDENDUM 3
0	2019/12/06	CHJS	MWBM	ISSUE FOR BID

MATTHEW D. BALCHMAN — STATE OF WASHINGTON — 38066 — PROFESSIONAL ENGINEER — 2020 MAR 09

COWI

APPROVED BY:

DATE:

SCVA 2019/12/06 — DESIGNED BY: DATE
CHJS 2019/12/06 — DRAWN BY: DATE
MWBM 2019/12/06 — CHECKED BY: DATE

CITY OF KIRKLAND
TOTEM LAKE CONNECTION

SOUTH MSE WALL SECTIONS – SHEET 4

SHEET: TLC–S–111
SCALE: AS SHOWN
FILENAME: A088367–S–108–113.dwg

LEGEND:

1. EXISTING GROUND
2. PERVIOUS ASPHALT W/ SUB BASE
3. MAINTAIN EXISTING GRAVEL SIDEWALK CONNECTION
4. DITCH
5. GRADING NEAR WEST SIDEWALK CONNECTION
6. FILL SLOPE 2H:1V
7. BENCH
8. VEGETATED WALL 1H:3V
9. RAILING W/ FOOTING
10. CUT SLOPE 2H:1V BLENDED INTO EXISTING GRADE
11. NOT USED
12. EXISTING CURB
13. GRAVEL SHOULDER
14. NOT USED
15. MSE GEOGRID REINFORCEMENT
16. EXCAVATION LINE
17. LIGHT POWER CABLE
18. STORM SEWER PIPE
19. ACCESS TRAIL

NOTES:

1. FOR GENERAL STRUCTURAL NOTES SEE DWG TLC–S–101.
2. FUTURE SANITARY SEWER FORCE MAIN AND FUTURE PSE POWER LINES NOT SHOWN.

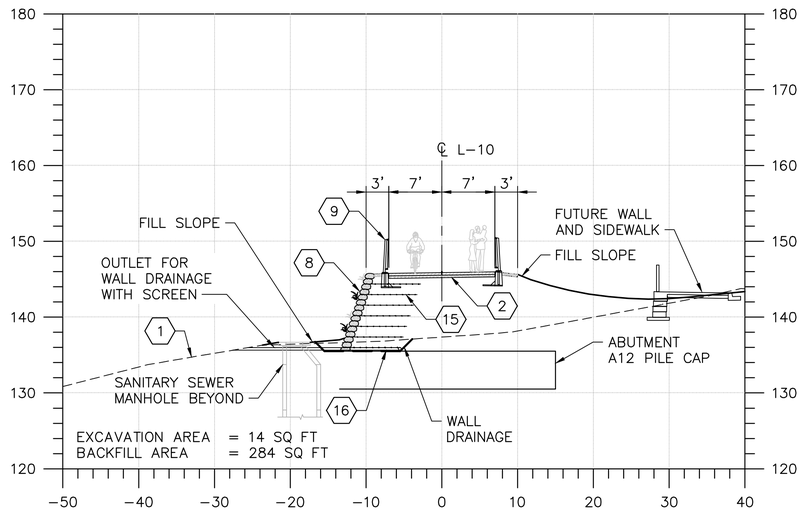

STA 23+00

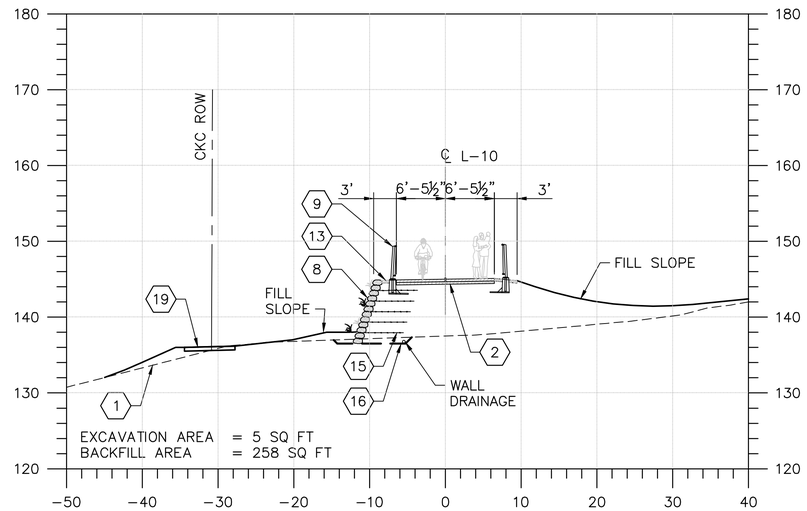

STA 23+20

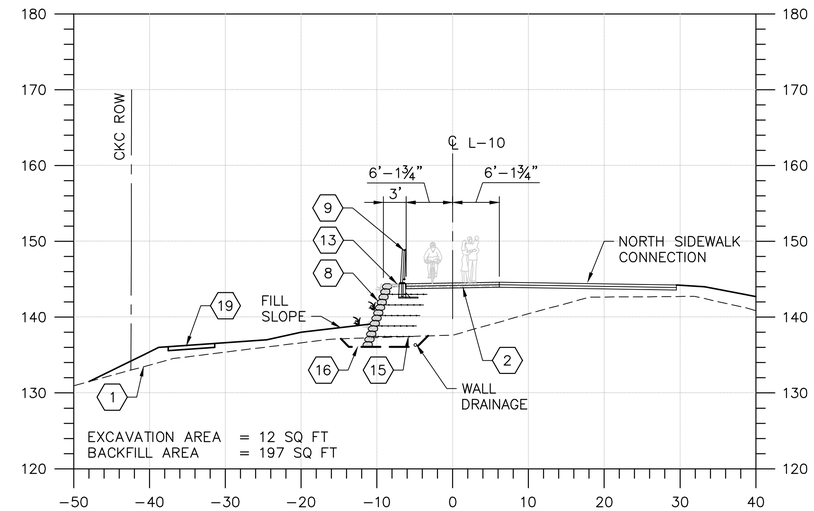

STA 23+40

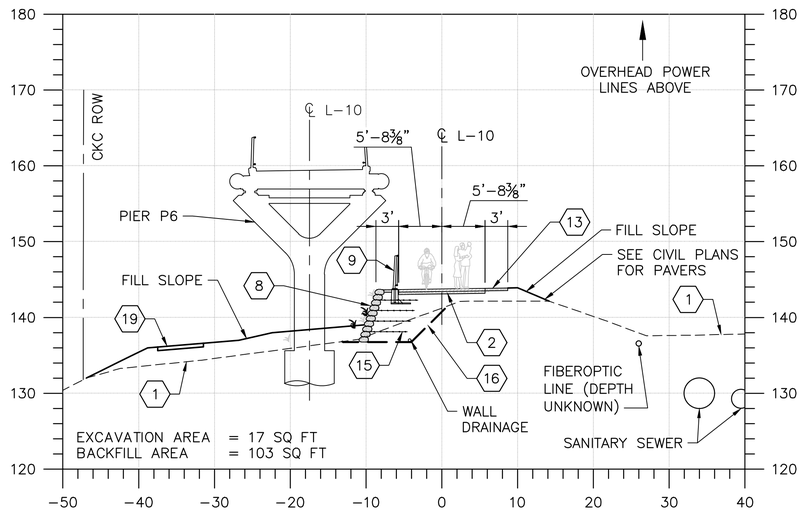

STA 23+60

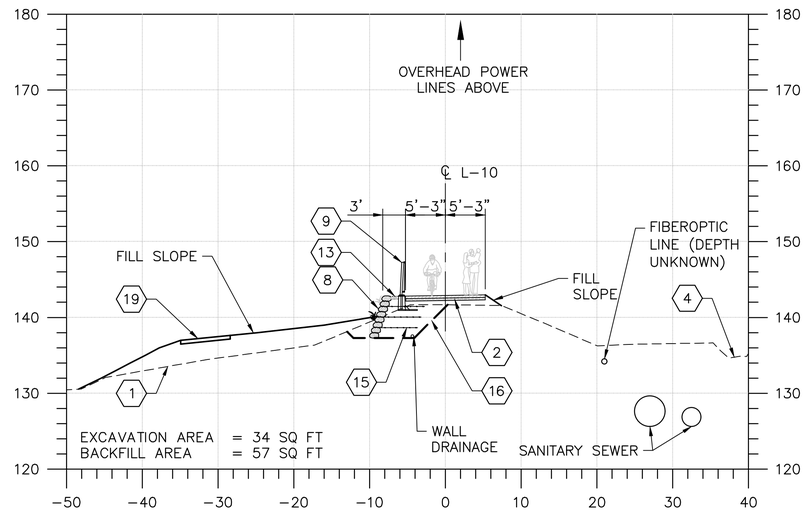

STA 23+80

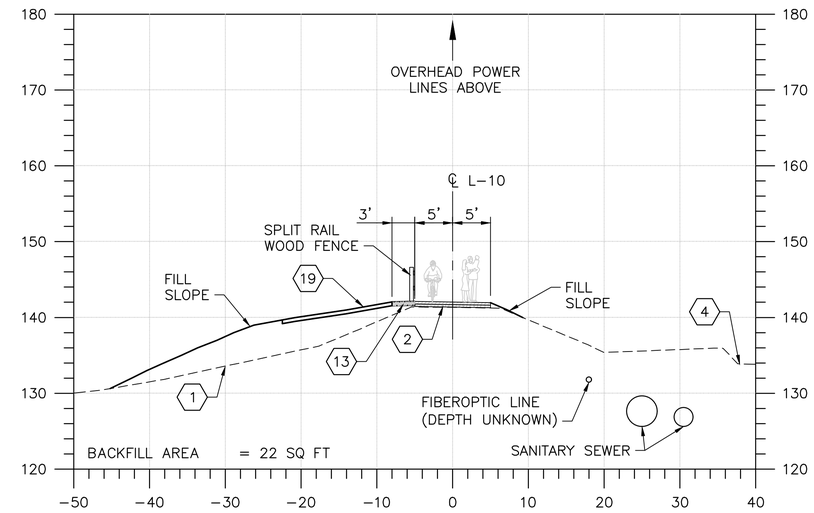

STA 24+00

NORTH WALL SECTIONS

SCALE: 1" = 10'

CITY OF KIRKLAND
DEPARTMENT OF PUBLIC WORKS
123 FIFTH AVENUE KIRKLAND, WA 98033
(425) 587-3800 www.kirklandwa.gov

NO.	DATE	BY	APPR.	REVISION
0	2019/12/06	CHJS	MWBM	ISSUE FOR BID

MATTHEW D. BAUGHMAN — STATE OF WASHINGTON — 2019 DEC 06 — PROFESSIONAL ENGINEER

COWI

SCVA DESIGNED BY:	2019/12/06 DATE
CHJS DRAWN BY:	2019/12/06 DATE
MWBM CHECKED BY:	2019/12/06 DATE

CITY OF KIRKLAND
TOTEM LAKE CONNECTION

NORTH MSE WALL SECTIONS – SHEET 1

SHEET: TLC–S–112
SCALE: AS SHOWN
FILENAME: A088367–S–108–113.dwg

File: D:\projectwise\cow\d0301252\A088367-S-108-113.dwg Save Date: Nov 11, 2019 2:00 PM Saved By: CHJS

LEGEND:

1. EXISTING GROUND
2. PERVIOUS ASPHALT W/ SUB BASE
3. MAINTAIN EXISTING GRAVEL SIDEWALK CONNECTION
4. DITCH
5. GRADING NEAR WEST SIDEWALK CONNECTION
6. FILL SLOPE 2H:1V
7. BENCH
8. VEGETATED WALL 1H:3V
9. RAILING W/ FOOTING
10. CUT SLOPE 2H:1V BLENDED INTO EXISTING GRADE
11. NOT USED
12. EXISTING CURB
13. GRAVEL SHOULDER
14. NOT USED
15. MSE GEOGRID REINFORCEMENT
16. EXCAVATION LINE
17. LIGHT POWER CABLE
18. STORM SEWER PIPE
19. ACCESS TRAIL

NOTES:

1. FOR GENERAL STRUCTURAL NOTES SEE DWG TLC–S–101.
2. FUTURE SANITARY SEWER FORCE MAIN AND FUTURE PSE POWER LINES NOT SHOWN.

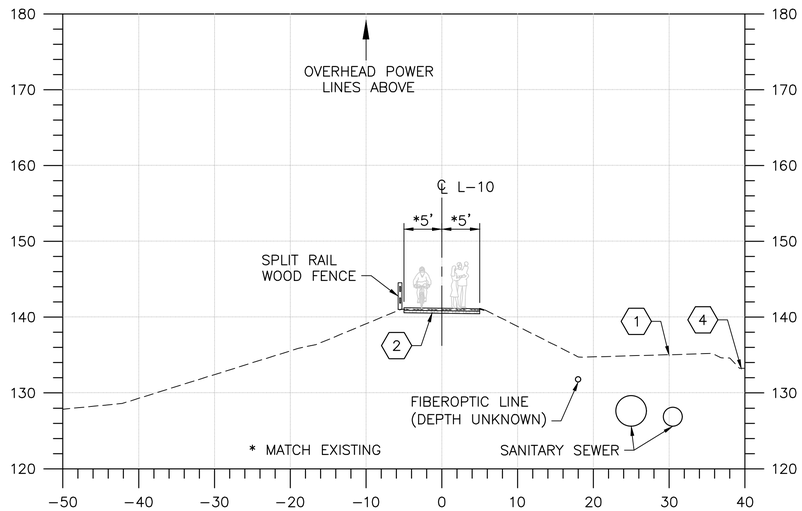

STA 24+20

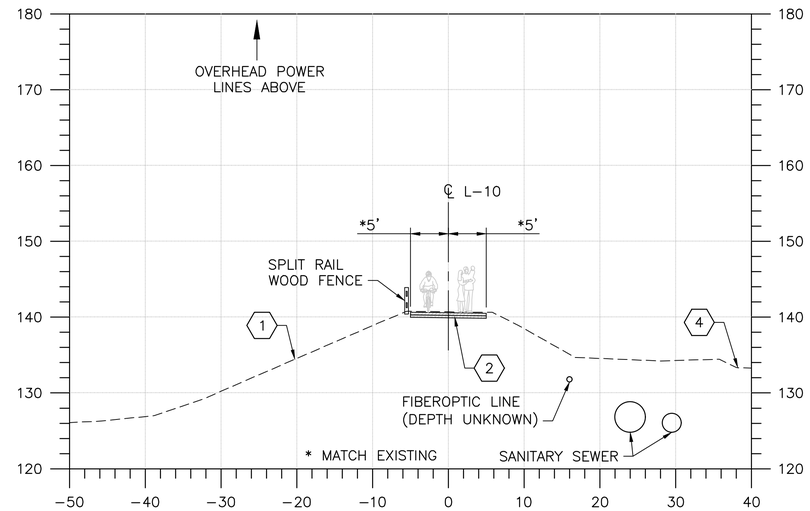

STA 24+40

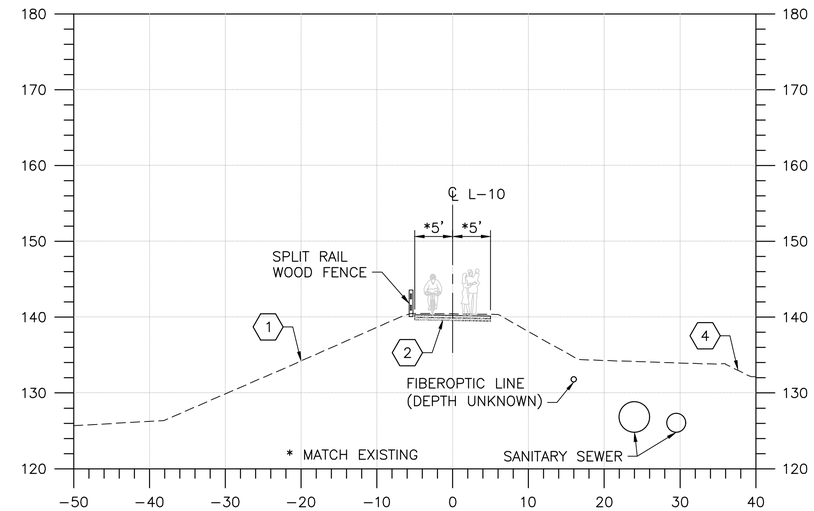

STA 24+60

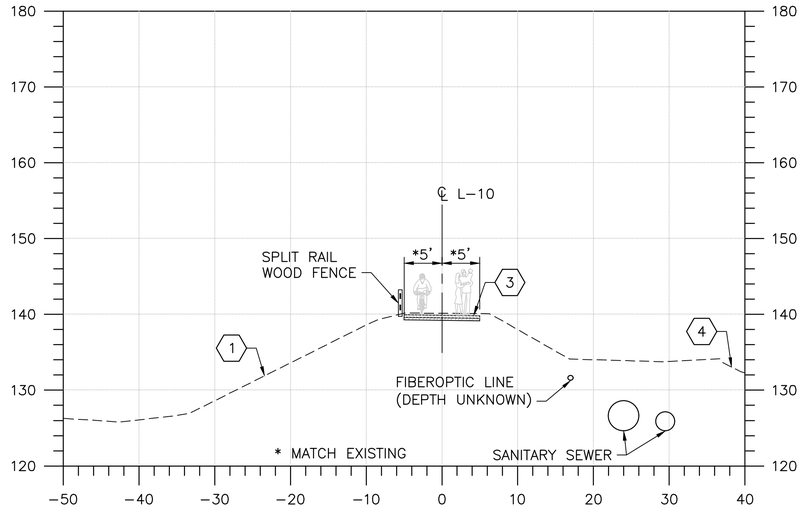

STA 24+80

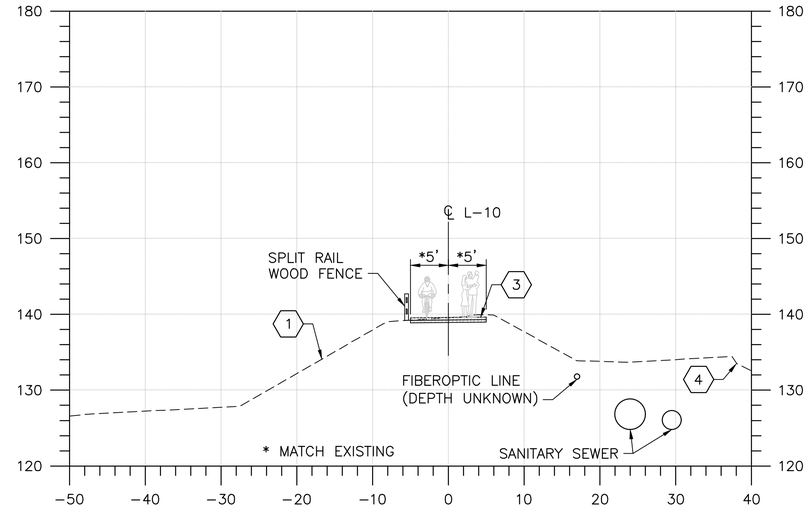

STA 25+00

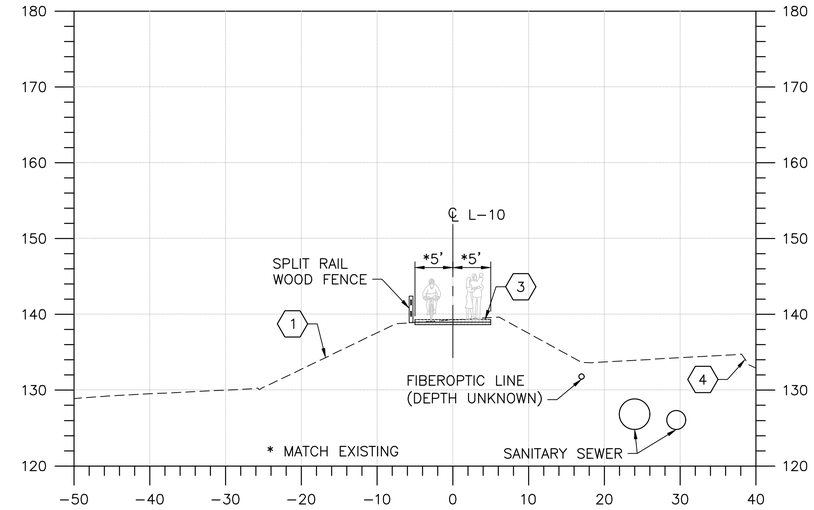

STA 25+20

NORTH WALL SECTIONS

SCALE: 1" = 10'

CITY OF KIRKLAND
DEPARTMENT OF PUBLIC WORKS
123 FIFTH AVENUE KIRKLAND, WA 98033
(425) 587-3800 www.kirklandwa.gov

NO.	DATE	BY	APPR.	REVISION
0	2019/12/06	CHJS	MWBM	ISSUE FOR BID

MATTHEW D. BAUGHMAN — STATE OF WASHINGTON — 2019 DEC 06 — PROFESSIONAL ENGINEER

COWI

SCVA — DESIGNED BY:	2019/12/06 DATE
CHJS — DRAWN BY:	2019/12/06 DATE
MWBM — CHECKED BY:	2019/12/06 DATE

CITY OF KIRKLAND
TOTEM LAKE CONNECTION

NORTH MSE WALL SECTIONS – SHEET 2

SHEET: TLC–S–113
SCALE: AS SHOWN
FILENAME: A088367–S–108–113.dwg

File: D:\projectwise\cow\d0301252\A088367-S-108-113.dwg Save Date: Nov 11, 2019 2:00 PM Saved By: CHJS

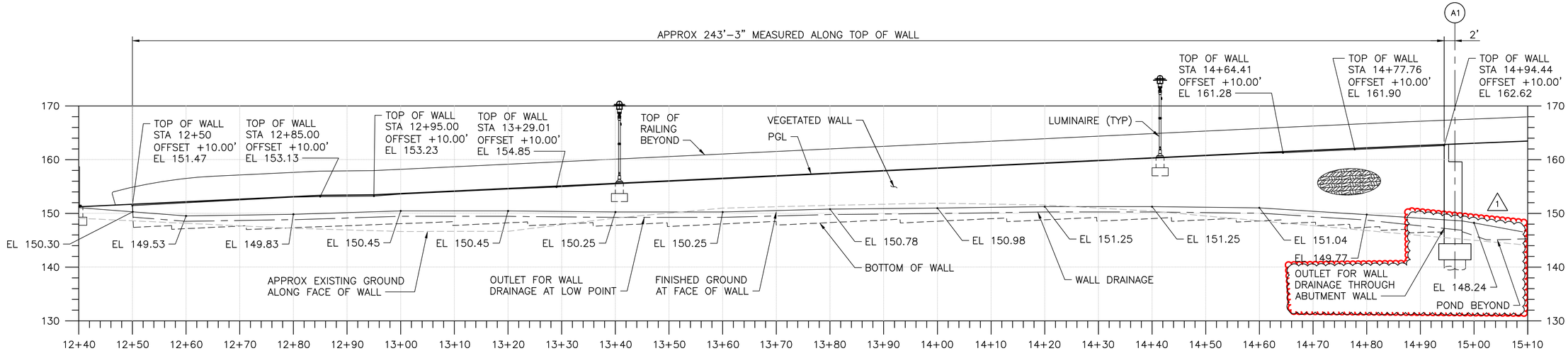

SOUTHEAST WALL ELEVATION

SCALE: 1" = 10'-0"

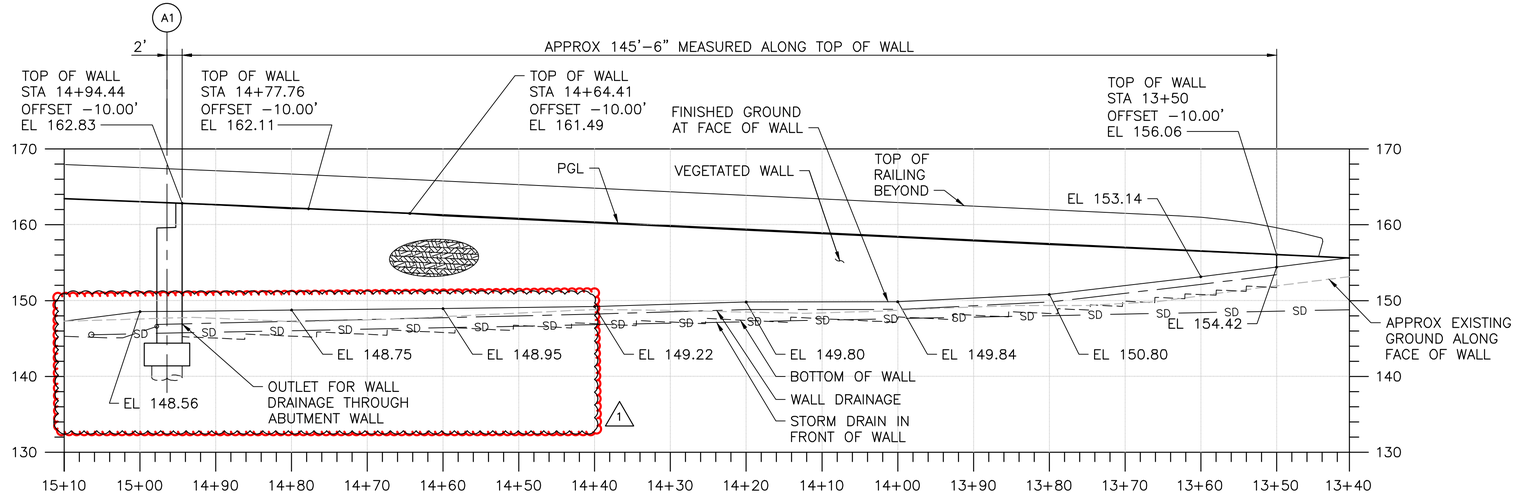

SOUTHWEST WALL ELEVATION

SCALE: 1" = 10'-0"

NOTES:

1. FOR GENERAL STRUCTURAL NOTES SEE DWG TLC-S-101.

File: C:\pwwork\dklypw2\d0301252\A088367-S-114-115.dwg Save Date: Mar 10, 2020 3:32 PM Saved By: MKAL

CITY OF KIRKLAND
DEPARTMENT OF PUBLIC WORKS
123 FIFTH AVENUE KIRKLAND, WA 98033
(425) 587-3800 www.kirklandwa.gov

NO.	DATE	BY	APPR.	REVISION
1	2020/03/09	MKAL	MWBM	ADDENDUM 3
0	2019/12/06	CHJS	MWBM	ISSUE FOR BID

MATTHEW D. BAUGHMAN, STATE OF WASHINGTON, 38968, PROFESSIONAL ENGINEER, 2020 MAR 09

COWI

APPROVED BY:

DATE:

SCVA 2019/12/06 DESIGNED BY: DATE
CHJS 2019/12/06 DRAWN BY: DATE
MWBM 2019/12/06 CHECKED BY: DATE

CITY OF KIRKLAND
TOTEM LAKE CONNECTION

MSE WALL ELEVATIONS

SHEET: TLC-S-114
SCALE: AS SHOWN
FILENAME: A088367-S-114-115.dwg

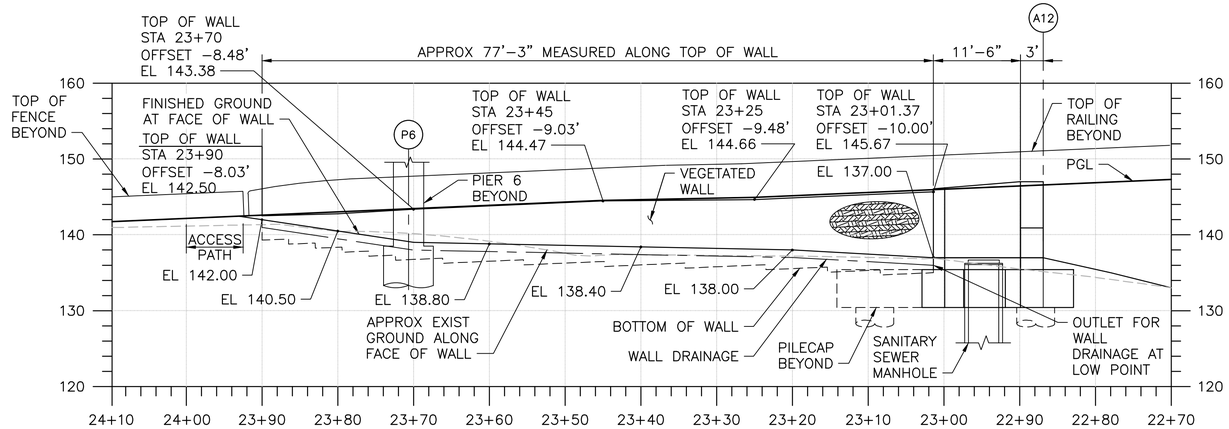

NORTHWEST WALL ELEVATION
SCALE: 1" = 10'−0"

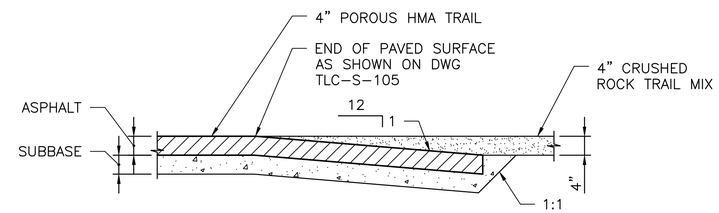

PAVED SURFACE TRANSITION DETAIL
SCALE: ¾" = 1'−0"

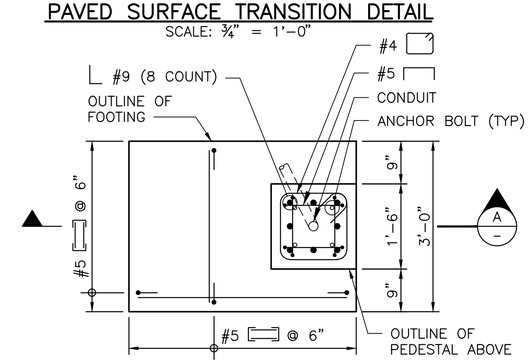

LUMINAIRE FOUNDATION PLAN
SCALE: ¾" = 1'−0"

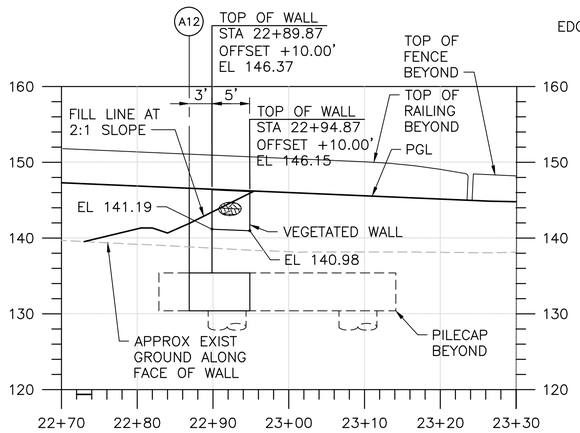

NORTHEAST WALL ELEVATION
SCALE: 1" = 10'−0"

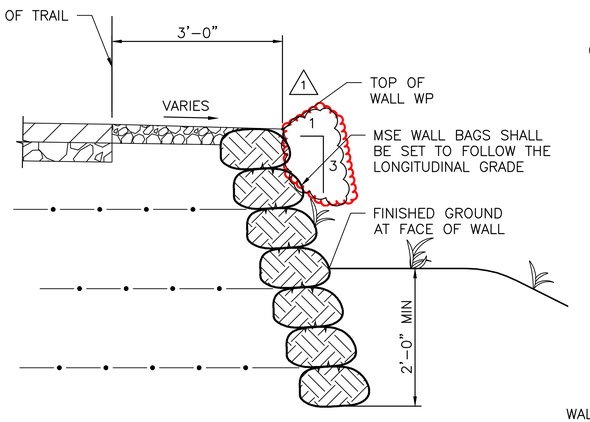

TYPICAL WALL SECTION
SCALE: ¾" = 1'−0"
(SOUTHEAST WALL SHOWN, OTHERS SIMILAR)

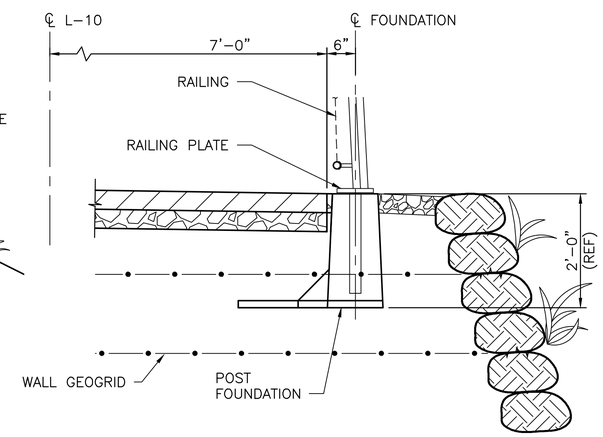

RAILING FOUNDATION DETAIL
SCALE: ¾" = 1'−0"

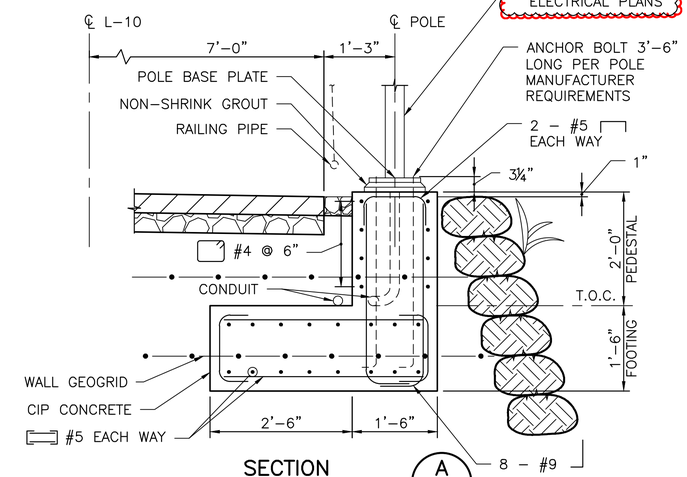

SECTION A
SCALE: ¾" = 1'−0"

NOTES:

1. FOR GENERAL STRUCTURAL NOTES SEE DWG TLC−S−101.
2. LUMINAIRE FOUNDATION IS DESIGNED FOR A FACTORED MOMENT OF 2.4 K−FT AND SHEAR OF 500−LBS ACTING AT THE UNDERSIDE OF BASE PLATE. CONTRACTOR SHALL CONFIRM ADEQUACY OF FOUNDATION FOR LOADS DIFFERENT FROM THIS.
3. LUMINAIRES ALONG L−50 SHALL USE COK STANDARD LIGHT POLE FOUNDATION PER STANDARD PLAN CK−R.47A, WITH PILE MODIFIED TO BE 5'−0" DEEP. TOP OF FOUNDATION SHALL PROJECT 1" MIN ABOVE FINISHED GROUND.

CITY OF KIRKLAND
DEPARTMENT OF PUBLIC WORKS
123 FIFTH AVENUE KIRKLAND, WA 98033
(425) 587-3800 www.kirklandwa.gov

NO.	DATE	BY	APPR.	REVISION
1	2020/03/09	KNBR	MWBM	ADDENDUM 3
0	2019/12/06	CHJS	MWBM	ISSUE FOR BID

MATTHEW D. BAUGHMAN, STATE OF WASHINGTON, 48904, PROFESSIONAL ENGINEER, 2020 MAR 09

COWI

APPROVED BY:

DATE:

SCVA DESIGNED BY:	2019/12/06 DATE
CHJS DRAWN BY:	2019/12/06 DATE
MWBM CHECKED BY:	2019/12/06 DATE

CITY OF KIRKLAND
TOTEM LAKE CONNECTION

MSE WALL ELEVATIONS AND DETAILS

SHEET: TLC−S−115
SCALE: AS SHOWN
FILENAME: A088367−S−114−115.dwg

File: C:\pwwork\dklypw2\a0301252\A088367−S−114−115.dwg Save Date: Mar 09, 2020 2:52 PM Saved By: KNBR

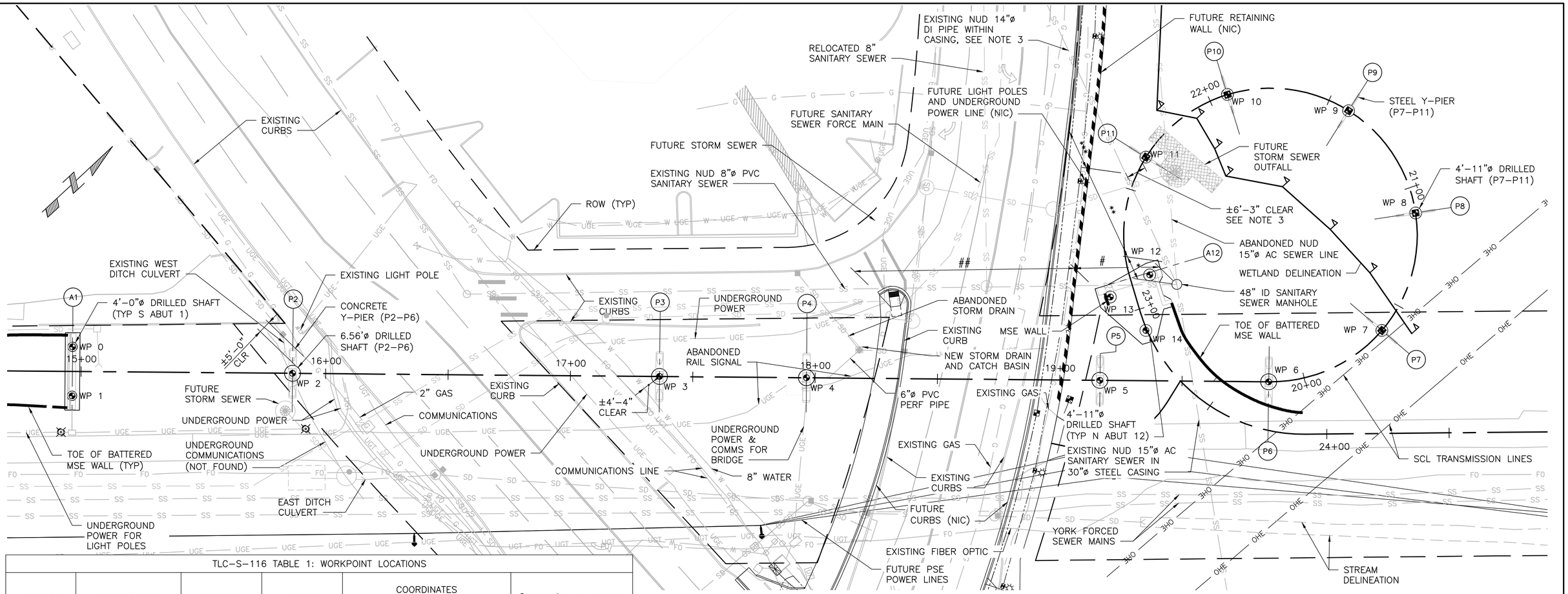

FOUNDATION PLAN

SCALE: 1" = 20'

TLC-S-116 TABLE 1: WORKPOINT LOCATIONS

LOCATION	WORK POINTS	STATION	OFFSET	COORDINATES		℄ PIER/ABUT AZIMUTH
				NORTHING	EASTING	
SOUTH ABUTMENT A1	WP 0	14+96.44	10'-0" LT	261344.55	1309543.72	-47.34°
	WP 1	14+96.44	10'-0" RT	261331.00	1309558.43	
PIER P2	WP 2	15+86.44	–	261403.96	1309612.07	-47.34°
PIER P3	WP 3	17+36.44	–	261514.27	1309713.72	-47.34°
PIER P4	WP 4	17+96.48	–	261558.42	1309754.40	-47.34°
PIER P5	WP 5	19+16.44	–	261646.63	1309835.70	-47.34°
PIER P6	WP 6	19+85.44	–	261697.38	1309882.45	-47.34°
PIER P7	WP 7	20+37.86	–	261745.71	1309897.97	+82.76°
PIER P8	WP 8	20+89.38	–	261788.15	1309871.62	+33.57°
PIER P9	WP 9	21+40.90	–	261795.94	1309822.28	-15.63°
PIER P10	WP 10	21+92.42	–	261763.68	1309784.14	-64.83°
PIER P11	WP 11	22+35.35	–	261721.79	1309780.72	+74.17°
NORTH ABUTMENT A12	WP 12	22+87.87	8'-0" LT	261690.56	1309817.44	+25.41°
	WP 13	22+91.87	10'-0" RT	261672.59	1309813.33	
	WP 14	23+09.09	0'-5⅛" RT	261674.22	1309833.20	

NOTES:

1. FOR GENERAL STRUCTURAL NOTES SEE DWG TLC-S-101.
2. THIS INFORMATION HAS BEEN ASSEMBLED ON THE CITY OF KIRKLAND'S GEOGRAPHIC INFORMATION SYSTEM. DATA PROVIDED HEREIN IS DERIVED FROM A NUMBER OF SOURCES WITH VARYING LEVELS OF ACCURACY. THE CITY OF KIRKLAND DISCLAIMS ALL RESPONSIBILITY FOR THE ACCURACY OF COMPLETENESS OF INFORMATION CONTAINED HEREIN.
3. PER NUD RECORD DRAWING, EXISTING NUD SANITARY SEWER IS D.I. CL 52 PIPE (RESTRAINED JOINT) INSIDE CASING AS FOLLOWS:

   * = 10' – 36" STEEL CASING GROUT FILLED
   ** = 40' – NOT CASED (BORE PIT)
   *** = 42" – STEEL CASING GROUT FILLED – 0.50 WALL

4. PER NUD RECORD DRAWING, EXISTING NUD SANITARY SEWER IS 8" PVC PIPE INSIDE CASING AS FOLLOWS:

   # = 34.5' – NOT CASED
   ## = 90' – 18" STEEL CASING SAND FILLED

   8" SEWER TO BE ABANDONED NORTH OF NEW MANHOLE IN TOTEM LAKE BOULEVARD.

CITY OF KIRKLAND
DEPARTMENT OF PUBLIC WORKS
123 FIFTH AVENUE KIRKLAND, WA 98033
(425) 587-3800 www.kirklandwa.gov

NO.	DATE	BY	APPR.	REVISION
0	2019/12/06	CHJS	MWBM	ISSUE FOR BID

MATTHEW D. BARGMAN — STATE OF WASHINGTON — 2019 DEC 06 — PROFESSIONAL ENGINEER

COWI

SCVA DESIGNED BY:	2019/12/06 DATE
CHJS DRAWN BY:	2019/12/06 DATE
MWBM CHECKED BY:	2019/12/06 DATE

CITY OF KIRKLAND
TOTEM LAKE CONNECTION

FOUNDATION LAYOUT

SHEET: TLC-S-116
SCALE: AS SHOWN
FILENAME: A088367-S-116.dwg

File: D:\projectwise\cowi\dk301252\A088367-S-116.dwg Save Date: Nov 26, 2019 3:25 PM Saved By: CHJS

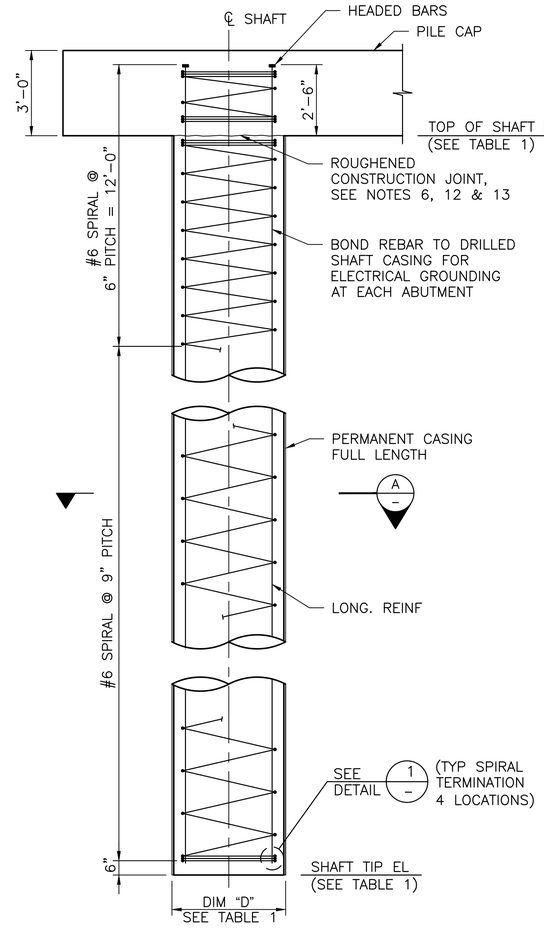

TYPICAL ELEVATION – A1

SCALE: ⅜" = 1'–0"

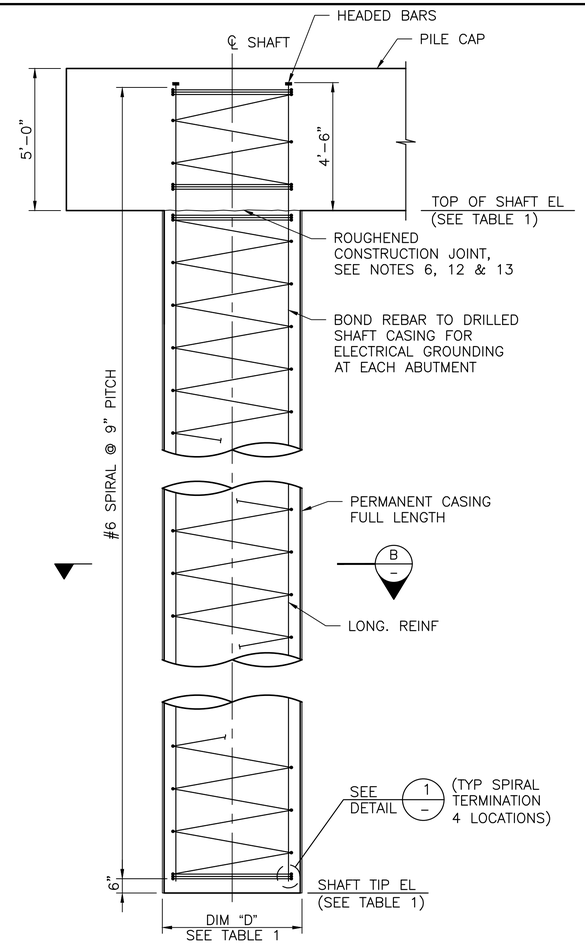

TYPICAL ELEVATION – A12

SCALE: ⅜" = 1'–0"

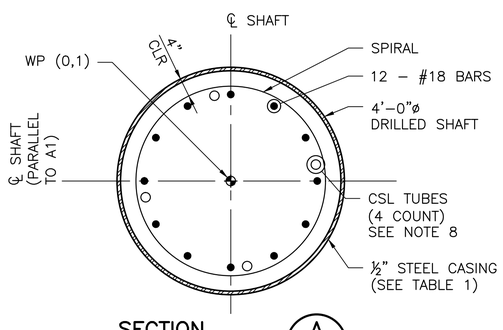

SECTION A

SCALE: ¾" = 1'–0"

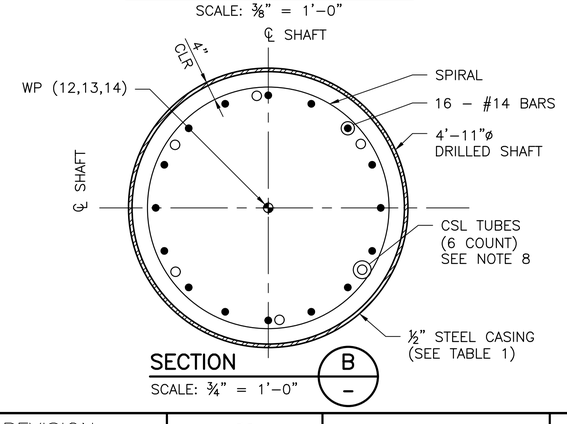

SECTION B

SCALE: ¾" = 1'–0"

TLC–S–117 TABLE 1: SHAFT DETAILS				
ABUTMENT	TOP OF SHAFT ELEVATION	CASING LENGTH	SHAFT TIP ELEVATION	CASING DIAMETER "D"
A1	141.37	35'–0"	106.37	4'–0"
A12	130.52	55'–0"	75.52	4'–11"

TLC–S–117 TABLE 2: WELD DIMENSIONS (IN)				
	BAR SIZE	S	E	L (LENGTH)
SPIRALS	#6	⅜	3/16	6

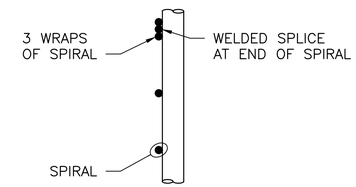

SPIRAL TERMINATION DETAIL

SCALE: NTS

1 – 1 118 1 119

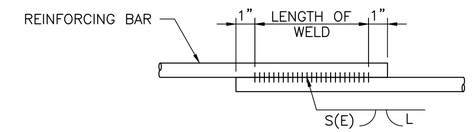

WELDED LAP SPLICE DETAIL

SCALE: NTS

(WELDING SHALL MEET THE REQUIREMENTS OF STD. SPEC. 6–02.3(24)E. FOR WELD DIMENSIONS, SEE TABLE 2.)

NOTES:

1. FOR GENERAL STRUCTURAL NOTES SEE DWG TLC–S–101.
2. ALL DRILLING OPERATIONS FOR DRILLED SHAFT FOUNDATIONS SCHEDULED ON THIS SHEET SHALL BE MONITORED BY THE RESIDENT ENGINEER.
3. THESE NOTES PERTAIN ONLY TO THE DRILLED SHAFT TYPE DETAILED ON THIS SHEET.
4. DRILLED SHAFT TIP ELEVATIONS SHALL BE VERIFIED BY THE GEOTECHNICAL ENGINEER PRIOR TO PLACEMENT OF REINFORCING STEEL AND CONCRETE.
5. THE EXACT LOCATION AND DEPTH OF ALL UNDERGROUND UTILITIES SHALL BE CONFIRMED BY THE CONTRACTOR PRIOR TO CONSTRUCTION.
6. PRIOR TO CASTING CONNECTION TO PILE CAP, CONTRACTOR SHALL REMOVE LAITANCE DOWN TO SOUND CONCRETE AT THE CONSTRUCTION JOINT AND SHALL CLEAN EXPOSED REINFORCEMENT.
7. LAP LENGTH FOR TRANSVERSE REINFORCEMENT SHALL BE 48 BAR DIAMETERS MINIMUM.
8. STEEL PIPES PROVIDED AS ACCESS TUBES FOR CSL TESTING SHALL BE IN ACCORDANCE WITH THE CONTRACT SPECIFICATIONS.
9. THE CONTRACTOR SHALL PROVIDE ADEQUATE BRACING TO MAINTAIN THE REINFORCEMENT CAGE STABILITY AT ALL CONSTRUCTION STAGES.
10. LAP SPLICES SHALL NOT BE PERMITTED FOR LONGITUDINAL REINFORCEMENT. MECHANICAL SPLICES ARE PERMITTED WHERE THEY ARE STAGGERED AT 24" IN AN INDIVIDUAL BUNDLE.
11. ALL WELDS FOR STEEL CASING SHALL BE COMPLETE JOINT PENETRATION GROOVE WELDS.
12. AS–BUILT LOCATIONS AND ELEVATIONS OF TOP OF SHAFTS SHALL BE SUBMITTED TO ENGINEER OF RECORD (EOR) PRIOR TO PROCEEDING WITH ABUTMENT CONSTRUCTION.
13. PROVIDE 1½" CLEAR FROM TOP OF SPIRAL TO LOWEST POINT OF CONSTRUCTION JOINT. VERTICAL BREAK IN SPIRAL TO ALLOW PLACEMENT OF BOTTOM MAT OF PILE CAP REINFORCEMENT, SHALL NOT EXCEED 6" AT A1 OR 9" AT A12.

CITY OF KIRKLAND
DEPARTMENT OF PUBLIC WORKS
123 FIFTH AVENUE KIRKLAND, WA 98033
(425) 587-3800 www.kirklandwa.gov

NO.	DATE	BY	APPR.	REVISION
0	2019/12/06	CHJS	MWBM	ISSUE FOR BID

MATTHEW D. BAUGHMAN, STATE OF WASHINGTON, STRUCTURAL ENGINEER, PROFESSIONAL ENGINEER
2019 DEC 06

COWI

SCVA DESIGNED BY:	2019/12/06 DATE
CHJS DRAWN BY:	2019/12/06 DATE
MWBM CHECKED BY:	2019/12/06 DATE

CITY OF KIRKLAND
TOTEM LAKE CONNECTION

ABUTMENT FOUNDATIONS

SHEET: TLC–S–117
SCALE: AS SHOWN
FILENAME: A088367–S–117.dwg

File: D:\Projectwise\COWI\d0301252\A088367–S–117.dwg Save Date: Nov 26, 2019 1:22 PM Saved By: CHJS

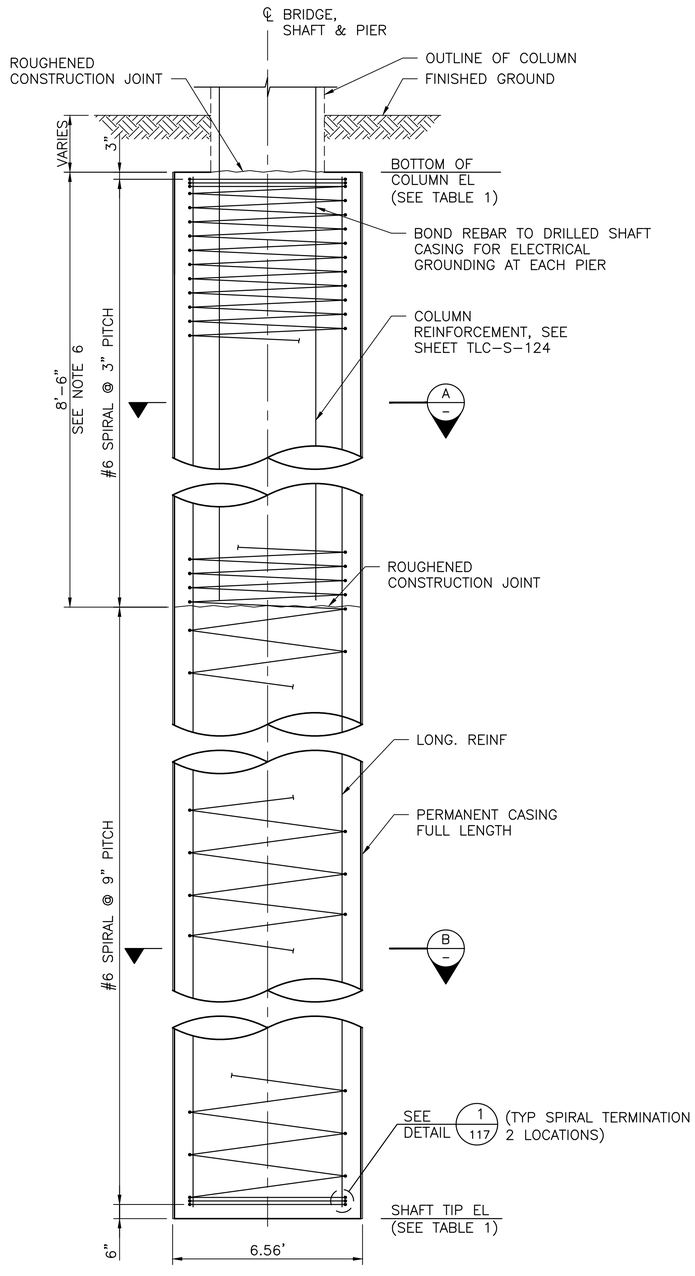

TYPICAL ELEVATION

SCALE: ⅜" = 1'-0"

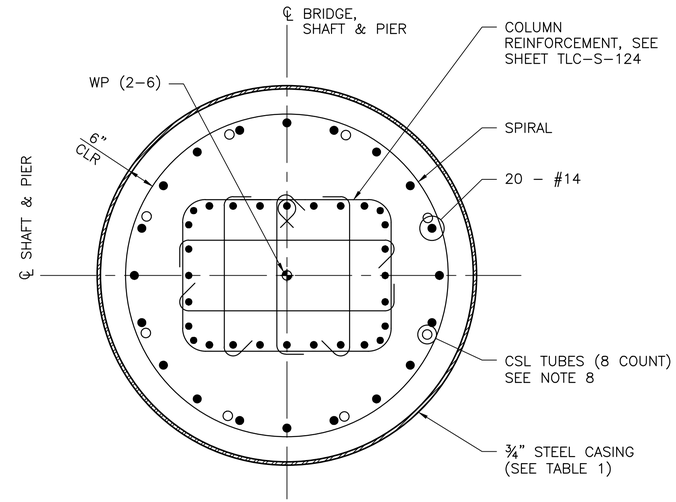

SECTION A –

SCALE: ¾" = 1'-0"

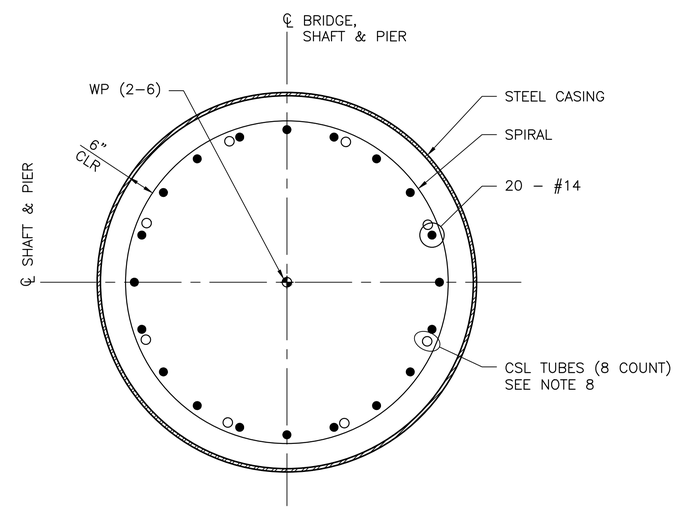

SECTION B –

SCALE: ¾" = 1'-0"

TLC-S-118 TABLE 1: SHAFT DETAILS			
PIER	BOTTOM OF COLUMN ELEVATION	CASING LENGTH	SHAFT TIP ELEVATION
P2	142.86	60'-0"	82.86
P3	143.07	60'-0"	83.07
P4	143.29	62'-0"	81.29
P5	139.57	60'-0"	79.57
P6	136.61	68'-0"	68.61

NOTES:

1. FOR GENERAL STRUCTURAL NOTES SEE DWG TLC-S-101.
2. ALL DRILLING OPERATIONS FOR DRILLED SHAFT FOUNDATIONS SCHEDULED ON THIS SHEET SHALL BE MONITORED BY THE RESIDENT ENGINEER.
3. THESE NOTES PERTAIN ONLY TO THE DRILLED SHAFT TYPE DETAILED ON THIS SHEET.
4. DRILLED SHAFT TIP ELEVATIONS SHALL BE VERIFIED BY THE GEOTECHNICAL ENGINEER PRIOR TO PLACEMENT OF REINFORCING STEEL AND CONCRETE.
5. THE EXACT LOCATION AND DEPTH OF ALL UNDERGROUND UTILITIES SHALL BE CONFIRMED BY THE CONTRACTOR PRIOR TO CONSTRUCTION.
6. PRIOR TO CASTING CONNECTION TO COLUMN REINFORCEMENT, CONTRACTOR SHALL REMOVE LAITANCE DOWN TO SOUND CONCRETE AT THE CONSTRUCTION JOINT AND SHALL CLEAN EXPOSED REINFORCEMENT.
7. LAP LENGTH FOR TRANSVERSE REINFORCEMENT SHALL BE 48 BAR DIAMETERS MINIMUM.
8. STEEL PIPES PROVIDED AS ACCESS TUBES FOR CSL TESTING SHALL BE IN ACCORDANCE WITH THE CONTRACT SPECIFICATIONS.
9. THE CONTRACTOR SHALL PROVIDE ADEQUATE BRACING TO MAINTAIN THE REINFORCEMENT CAGE STABILITY AT ALL CONSTRUCTION STAGES.
10. LAP SPLICES SHALL NOT BE PERMITTED FOR LONGITUDINAL REINFORCEMENT. MECHANICAL SPLICES ARE PERMITTED WHERE THEY ARE STAGGERED AT 24".
11. ALL WELDS FOR STEEL CASING SHALL BE COMPLETE JOINT PENETRATION GROOVE WELDS.
12. AS-BUILT LOCATIONS AND ELEVATIONS OF SHAFTS SHALL BE SENT TO ENGINEER OF RECORD (EOR) PRIOR TO PROCEEDING WITH PIER CONSTRUCTION.

CITY OF KIRKLAND
DEPARTMENT OF PUBLIC WORKS
123 FIFTH AVENUE KIRKLAND, WA 98033
(425) 587-3800 www.kirklandwa.gov

NO.	DATE	BY	APPR.	REVISION
0	2019/12/06	CHJS	MWBM	ISSUE FOR BID

MATTHEW D. BAUGHMAN, STATE OF WASHINGTON, STRUCTURAL ENGINEER, PROFESSIONAL ENGINEER
2019 DEC 06

COWI

SCVA DESIGNED BY:	2019/12/06 DATE
CHJS DRAWN BY:	2019/12/06 DATE
MWBM CHECKED BY:	2019/12/06 DATE

CITY OF KIRKLAND
TOTEM LAKE CONNECTION

CONCRETE Y-PIER FOUNDATIONS

SHEET: TLC-S-118
SCALE: AS SHOWN
FILENAME: A088367-S-118.dwg

File: D:\Projectwise\COWI\d0301252\A088367-S-118.dwg Save Date: Nov 26, 2019 1:21 PM Saved By: CHJS

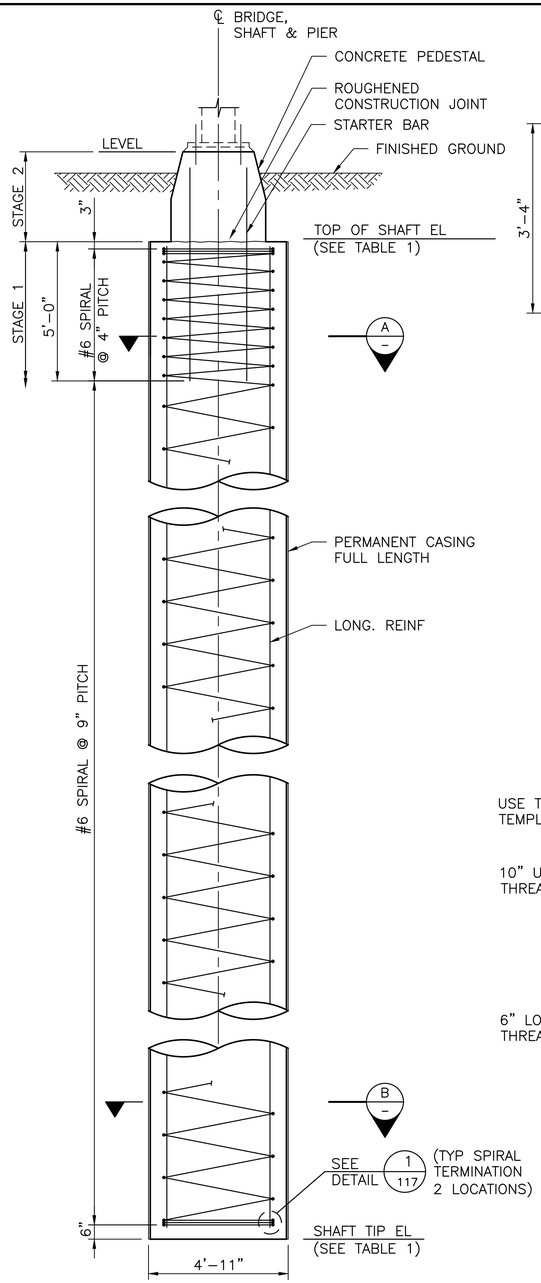

TYPICAL ELEVATION

SCALE: ⅜" = 1'-0"

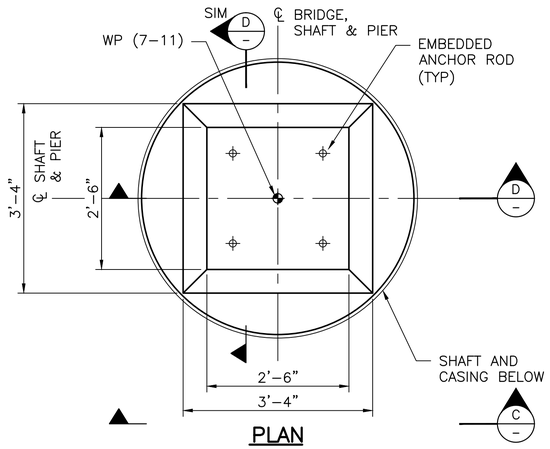

PLAN

SCALE: ¾" = 1'-0"

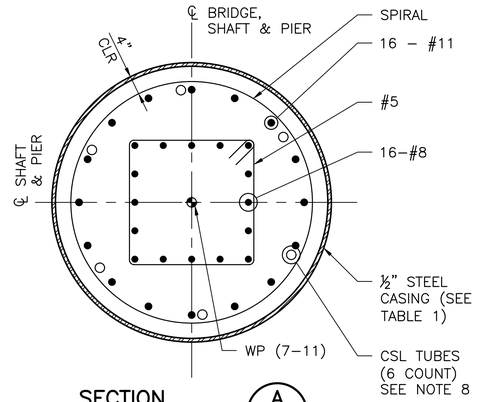

SECTION A

SCALE: ¾" = 1'-0"

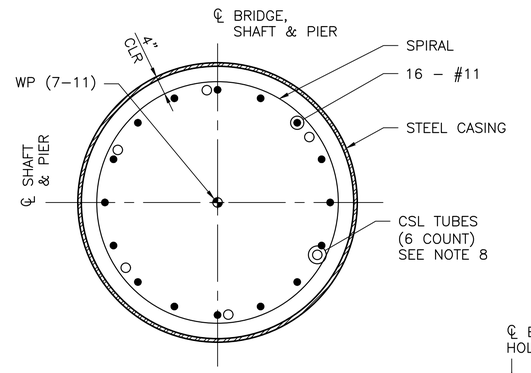

SECTION B

SCALE: ¾" = 1'-0"

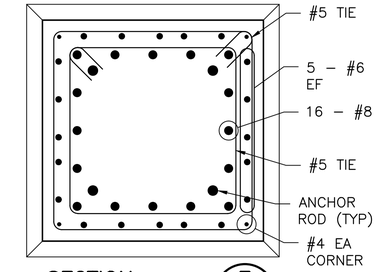

SECTION E

SCALE: 1" = 1'-0"

TLC-S-119 TABLE 1: SHAFT DETAILS			
PIER	TOP OF SHAFT ELEVATION	CASING LENGTH	SHAFT TIP ELEVATION
P7	126.80	65'-0"	61.80
P8	123.25	65'-6"	57.75
P9	122.54	65'-0"	57.54
P10	123.07	65'-0"	58.07
P11	126.81	65'-0"	61.81

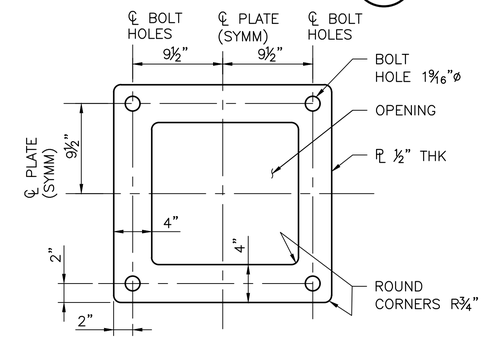

TOP & BOTTOM TEMPLATE PLATE DETAIL

SCALE: 1½" = 1'-0"

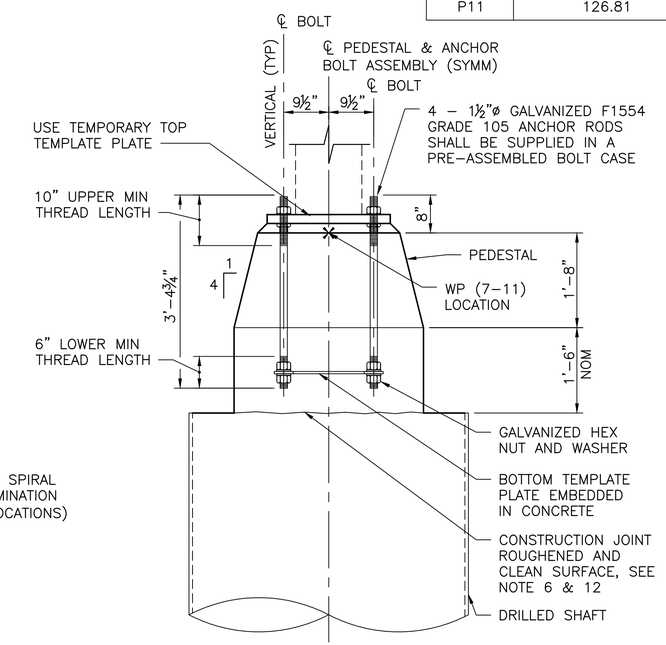

SECTION C

SCALE: ¾" = 1'-0"

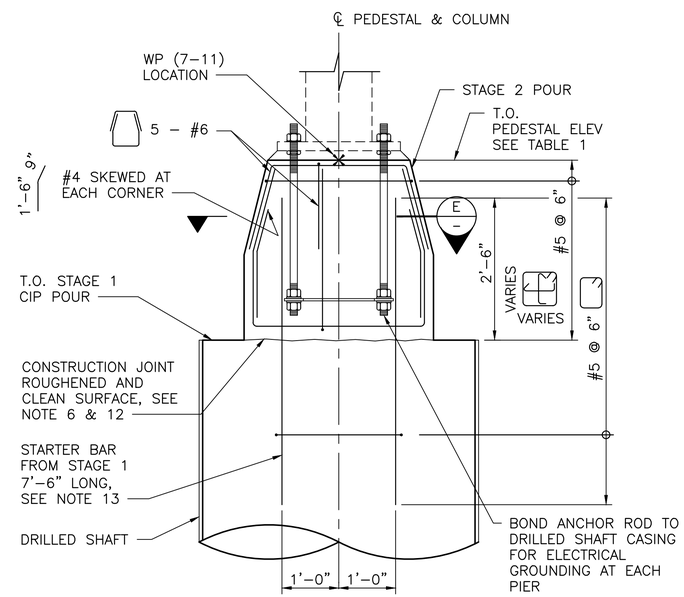

SECTION D

SCALE: ¾" = 1'-0"

(SHAFT REINFORCEMENT NOT SHOWN FOR CLARITY)

NOTES:

1. FOR GENERAL STRUCTURAL NOTES SEE DWG TLC-S-101.
2. ALL DRILLING OPERATIONS FOR DRILLED SHAFT FOUNDATIONS SCHEDULED ON THIS SHEET SHALL BE MONITORED BY THE RESIDENT ENGINEER.
3. THESE NOTES PERTAIN ONLY TO THE DRILLED SHAFT TYPE DETAILED ON THIS SHEET.
4. DRILLED SHAFT TIP ELEVATIONS SHALL BE VERIFIED BY THE GEOTECHNICAL ENGINEER PRIOR TO PLACEMENT OF REINFORCING STEEL AND CONCRETE.
5. THE EXACT LOCATION AND DEPTH OF ALL UNDERGROUND UTILITIES SHALL BE CONFIRMED BY THE CONTRACTOR PRIOR TO CONSTRUCTION.
6. PRIOR TO CASTING PEDESTAL, THE CONTRACTOR SHALL REMOVE LAITANCE DOWN TO SOUND CONCRETE AT THE CONSTRUCTION JOINT AND SHALL CLEAN EXPOSED REINFORCEMENT.
7. LAP LENGTH FOR TRANSVERSE REINFORCEMENT SHALL BE 48 BAR DIAMETERS MINIMUM.
8. STEEL PIPES PROVIDED AS ACCESS TUBES FOR CSL TESTING SHALL BE IN ACCORDANCE WITH THE CONTRACT SPECIFICATIONS.
9. THE CONTRACTOR SHALL PROVIDE ADEQUATE BRACING TO MAINTAIN THE REINFORCEMENT CAGE STABILITY AT ALL CONSTRUCTION STAGES.
10. LAP SPLICES SHALL NOT BE PERMITTED FOR LONGITUDINAL REINFORCEMENT. MECHANICAL SPLICES ARE PERMITTED WHERE THEY ARE STAGGERED AT 24" IN AN INDIVIDUAL BUNDLE.
11. ALL WELDS FOR STEEL CASING SHALL BE COMPLETE JOINT PENETRATION GROOVE WELDS.
12. AS-BUILT LOCATIONS AND ELEVATIONS OF TOP OF SHAFTS SHALL BE SENT TO ENGINEER OF RECORD (EOR) PRIOR TO PROCEEDING WITH PIER CONSTRUCTION.
13. STARTER BARS SHALL BE SET TO TARGET WP COORDINATES WHICH MAY DIFFER FROM CONSTRUCTED POSITION OF SHAFT.

CITY OF KIRKLAND
DEPARTMENT OF PUBLIC WORKS
123 FIFTH AVENUE KIRKLAND, WA 98033
(425) 587-3800 www.kirklandwa.gov

NO.	DATE	BY	APPR.	REVISION
0	2019/12/06	CHJS	MWBM	ISSUE FOR BID

MATTHEW D. BAUGHMAN, STATE OF WASHINGTON, STRUCTURAL ENGINEER, PROFESSIONAL ENGINEER — 2019 DEC 06

COWI

SCVA DESIGNED BY:	2019/12/06 DATE
CHJS DRAWN BY:	2019/12/06 DATE
MWBM CHECKED BY:	2019/12/06 DATE

CITY OF KIRKLAND
TOTEM LAKE CONNECTION

STEEL Y-PIER FOUNDATIONS

SHEET: TLC-S-119
SCALE: AS SHOWN
FILENAME: A088367-S-119.dwg

File: D:\Projectwise\COWI\d0301252\A088367-S-119.dwg Save Date: Nov 26, 2019 1:21 PM Saved By: CHJS

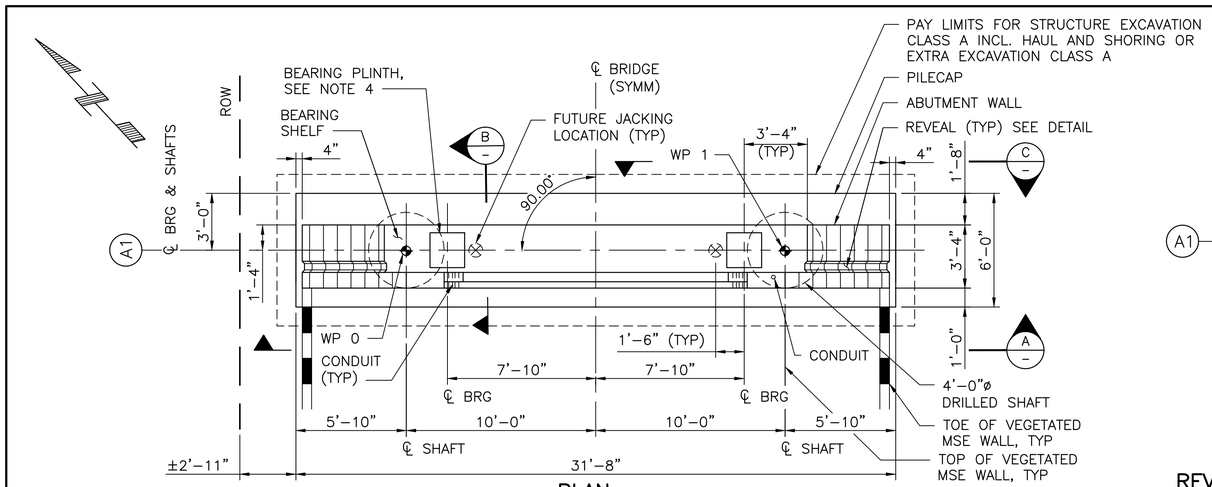

PLAN

SCALE: ¼" = 1'-0"

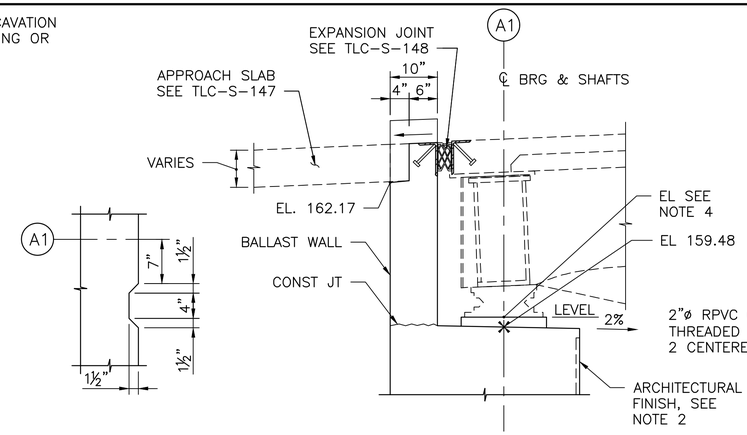

REVEAL DETAIL 1 –

SCALE: 1" = 1'-0"

DETAIL 2 –

SCALE: ¾" = 1'-0"

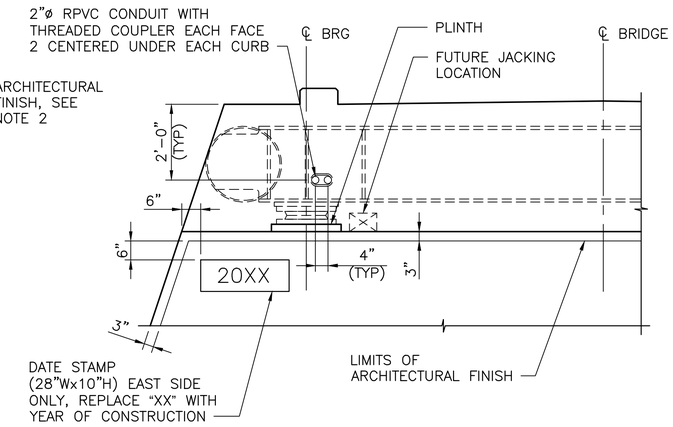

SECTION C –

SCALE: ½" = 1'-0"

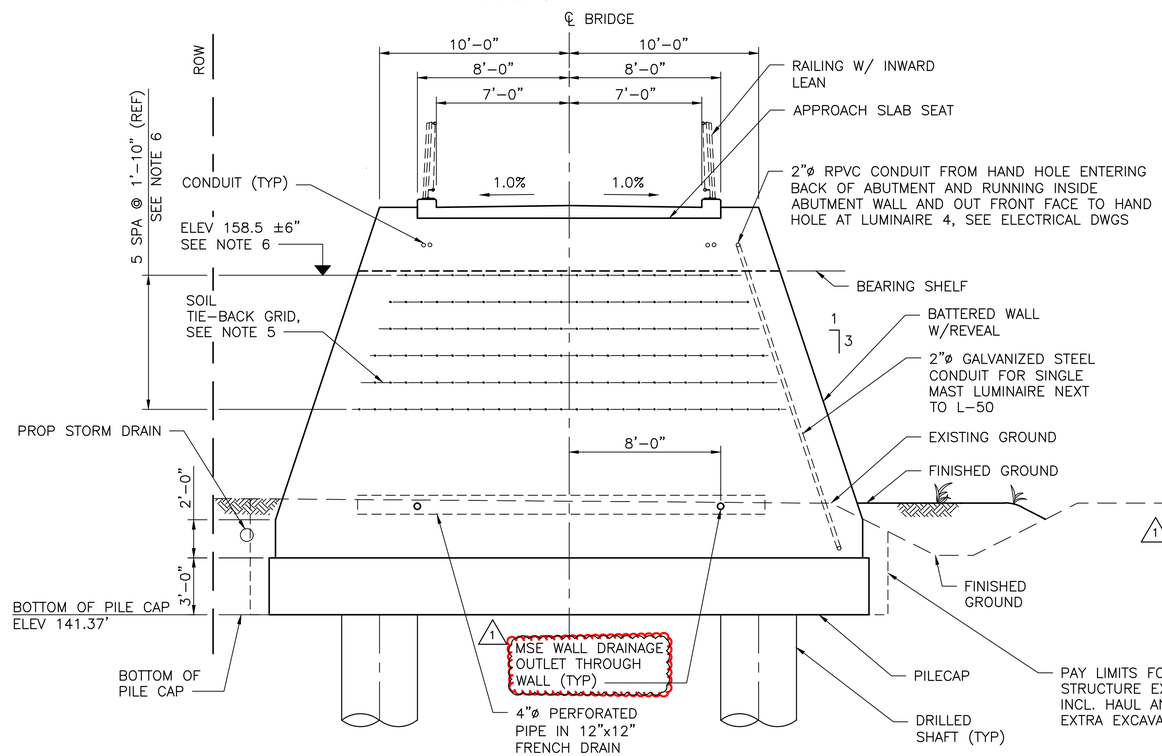

SECTION A – (VEGETATED MSE WALL NOT SHOWN)

SCALE: ¼" = 1'-0"

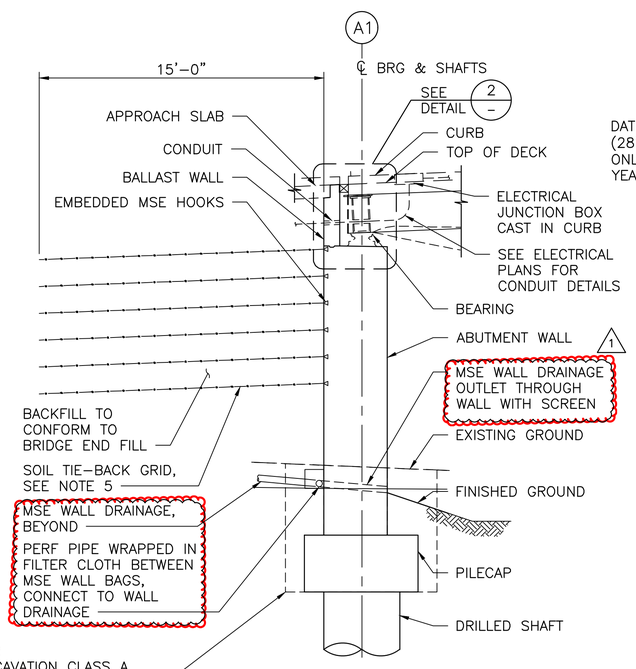

SECTION B –

SCALE: ¼" = 1'-0"

NOTES:

1. FOR GENERAL STRUCTURAL NOTES SEE DWG TLC-S-101.
2. ARCHITECTURAL FINISH SHALL BE "VARIABLE DEPTH RANDOM BOARD" WITH A VERTICAL ORIENTATION. THE FINISH SHALL EXTEND TO 1' MIN BELOW FINISHED GROUND.
3. PIGMENTED SEALER SHALL BE APPLIED TO BATTERED FACES (FULL HEIGHT) AND VERTICAL FACES OF FRONT WALL AND BALLAST WALL.
4. BEARING PLINTHS SHALL BE POURED SEPARATELY FROM THE ABUTMENT. PLINTHS SHALL BE SIZED TO BE 3" WIDER THAN THE BEARING MASONRY PLATE IN EACH DIRECTION, BUT SHALL BE AT LEAST 1" CLEAR OF EDGE OF ABUTMENT. PLINTH HEIGHT SHALL BE ESTABLISHED BASED ON ACTUAL BEARING HEIGHT, BUT SHALL BE 3" MIN TO 6" MAX. CONTRACTOR TO SUBMIT PLINTH DIMENSIONS TO ENGINEER OF RECORD FOR REVIEW PRIOR TO SETTING REBAR CAGE AND POURING PIER.
5. TIEBACK STEEL GRID COMPRISED OF COLD DRAWN WIRE CONFORMING TO ASTM A-82 AND WELDED IN ACCORDANCE WITH ASTM A-185 AND GALVANIZED PER ASTM A-123 WITH GALVANIZED CAST STEEL INSERTS:
   - LONGITUDINAL WIRE, W12.2 @ 6"
   - TRANSVERSE WIRE, W9.5 @ 6"
6. STEEL GRID FOR ABUTMENT SHALL BE COORDINATED W/ MSE WALL GEOGRID REINFORCEMENT SUCH THAT IT IS CENTERED BETWEEN ADJACENT GEOGRID LAYERS, MIN 18"/MAX 24" OC. THE FIRST LAYER SHALL BE SITUATED BELOW THE BEARING SHELF ELEVATION.
7. SEE NOTE 10 ON DWG TLC-S-145 REGARDING ELECTRICAL GROUNDING OF STRUCTURE.

CITY OF KIRKLAND
DEPARTMENT OF PUBLIC WORKS
123 FIFTH AVENUE KIRKLAND, WA 98033
(425) 587-3800 www.kirklandwa.gov

NO.	DATE	BY	APPR.	REVISION
1	2020/03/09	MKAL	MWBM	ADDENDUM 3
0	2019/12/06	CHJS	MWBM	ISSUE FOR BID

MATTHEW D. BAUGHMAN, STATE OF WASHINGTON, 49812, PROFESSIONAL ENGINEER — 2020 MAR 09

COWI

APPROVED BY:

DATE:

SCVA DESIGNED BY:	2019/12/06 DATE
CHJS DRAWN BY:	2019/12/06 DATE
MWBM CHECKED BY:	2019/12/06 DATE

CITY OF KIRKLAND
TOTEM LAKE CONNECTION

SOUTH ABUTMENT OUTLINE

SHEET: TLC-S-120
SCALE: AS SHOWN
FILENAME: A088367-S-120.dwg

File: C:\pwwork\dklpw2\d0301252\A088367-S-120.dwg Save Date: Mar 10, 2020 3:26 PM Saved By: MKAL

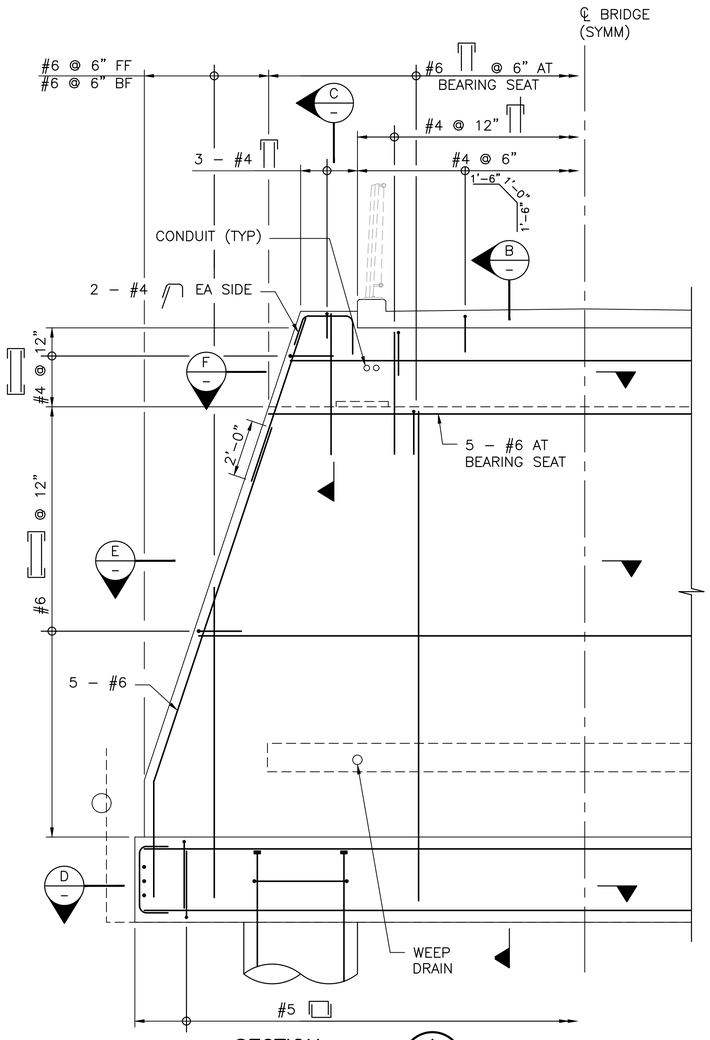

SECTION A 120
SCALE: ⅜" = 1'–0"
(MSE HOOKS NOT SHOWN FOR CLARITY)

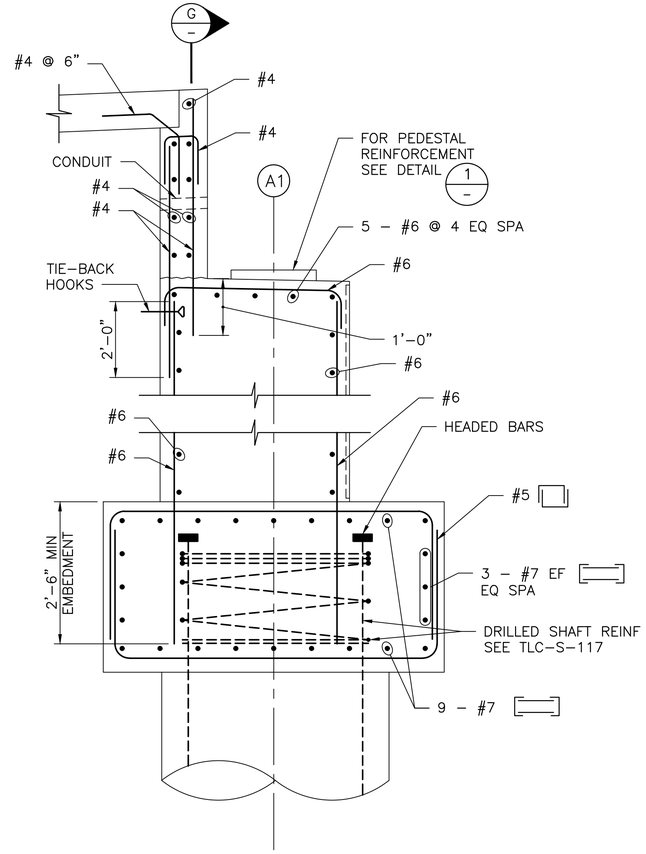

SECTION B
SCALE: ¾" = 1'–0"

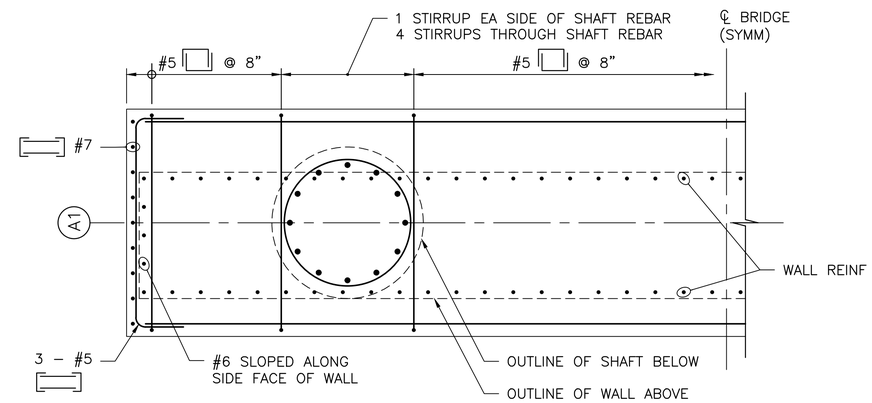

SECTION D
SCALE: ½" = 1'–0"

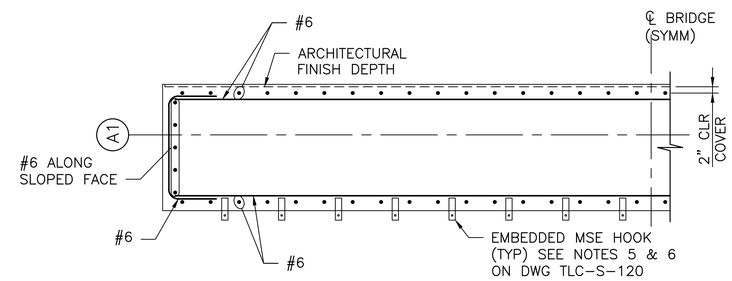

SECTION E
SCALE: ½" = 1'–0"

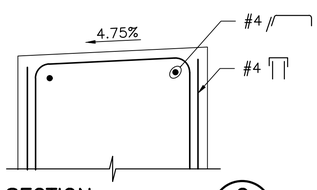

SECTION C
SCALE: ¾" = 1'–0"

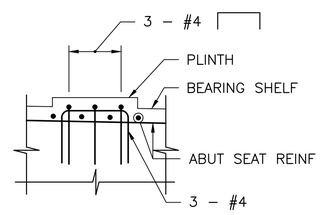

DETAIL 1
SCALE: ¾" = 1'–0"

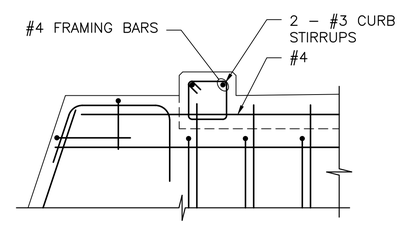

SECTION G
SCALE: ¾" = 1'–0"
(SEE SECTION A FOR BAR CALLOUTS NOT SHOWN)

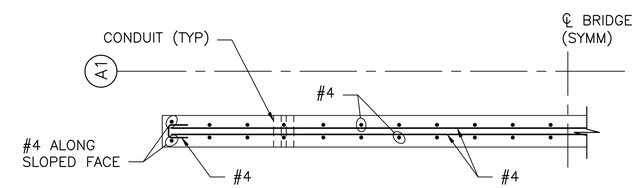

SECTION F
SCALE: ½" = 1'–0"

NOTES:

1. FOR GENERAL STRUCTURAL NOTES SEE DWG TLC–S–101.

CITY OF KIRKLAND
DEPARTMENT OF PUBLIC WORKS
123 FIFTH AVENUE KIRKLAND, WA 98033
(425) 587-3800 www.kirklandwa.gov

NO.	DATE	BY	APPR.	REVISION
0	2019/12/06	CHJS	MWBM	ISSUE FOR BID

MATTHEW D. BAUGHMAN — STATE OF WASHINGTON — STRUCTURAL ENGINEER — PROFESSIONAL ENGINEER — 2019 DEC 06

COWI

SCVA DESIGNED BY:	2019/12/06 DATE
CHJS DRAWN BY:	2019/12/06 DATE
MWBM CHECKED BY:	2019/12/06 DATE

CITY OF KIRKLAND
TOTEM LAKE CONNECTION

SOUTH ABUTMENT REINFORCEMENT

SHEET: TLC–S–121
SCALE: AS SHOWN
FILENAME: A088367–S–121.dwg

File: D:\Projectwise\COWI\d0301252\A088367-S-121.dwg Save Date: Nov 26, 2019 1:22 PM Saved By: CHJS

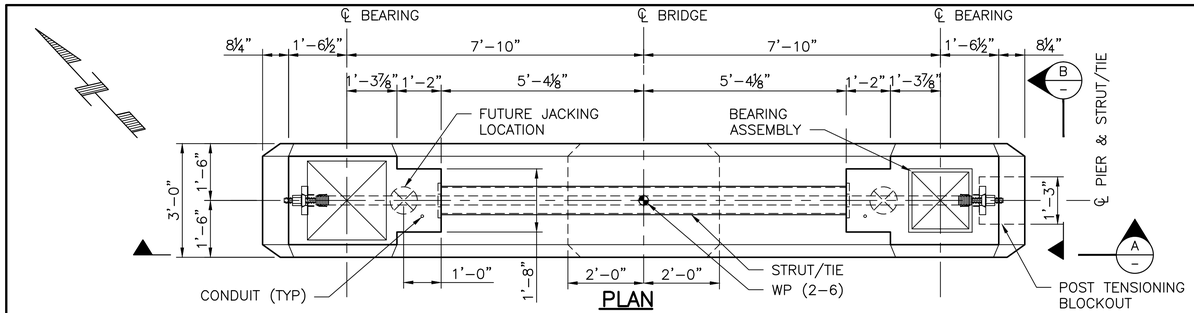

PLAN

SCALE: ½" = 1'-0"

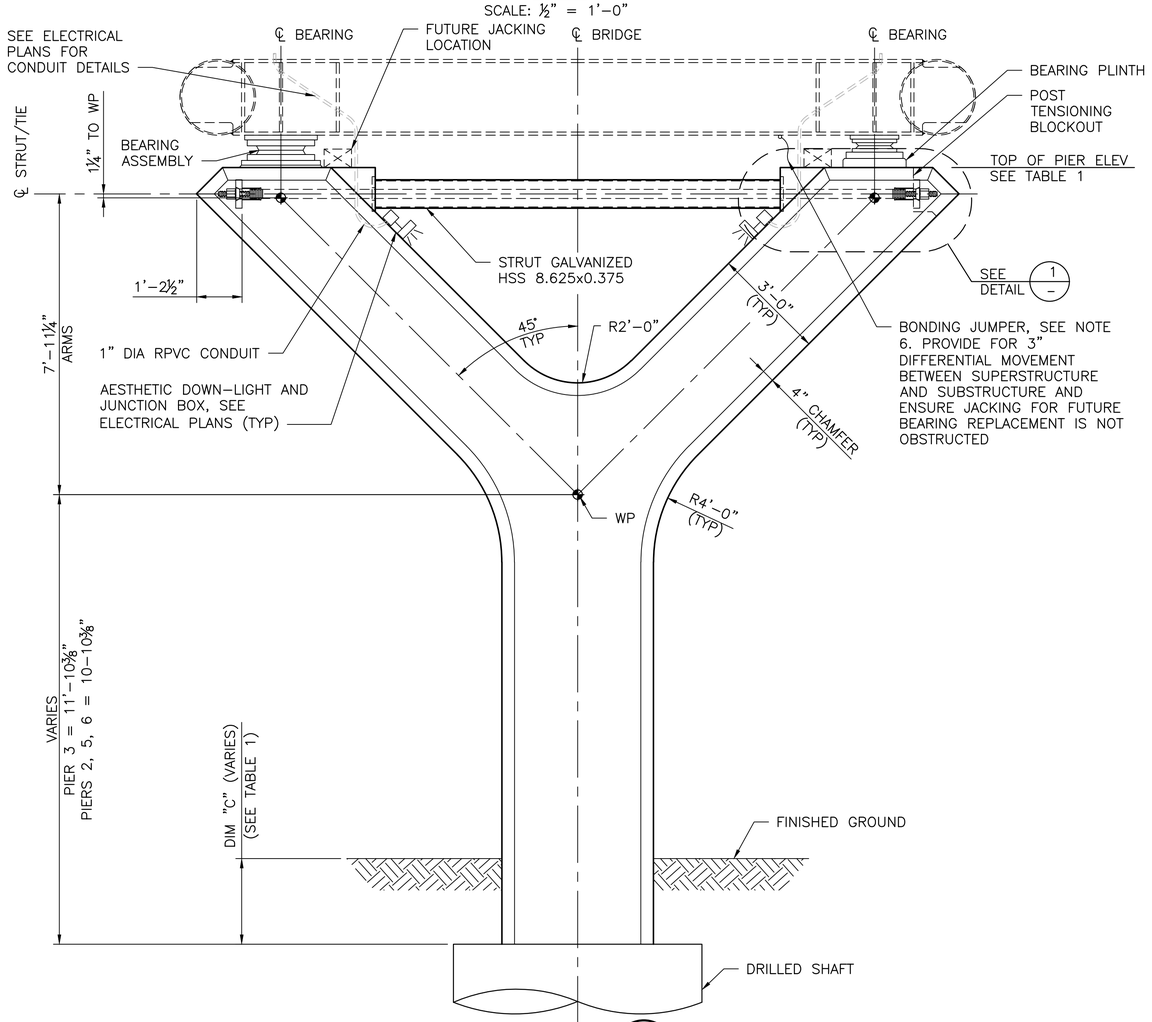

SECTION A

SCALE: ½" = 1'-0"

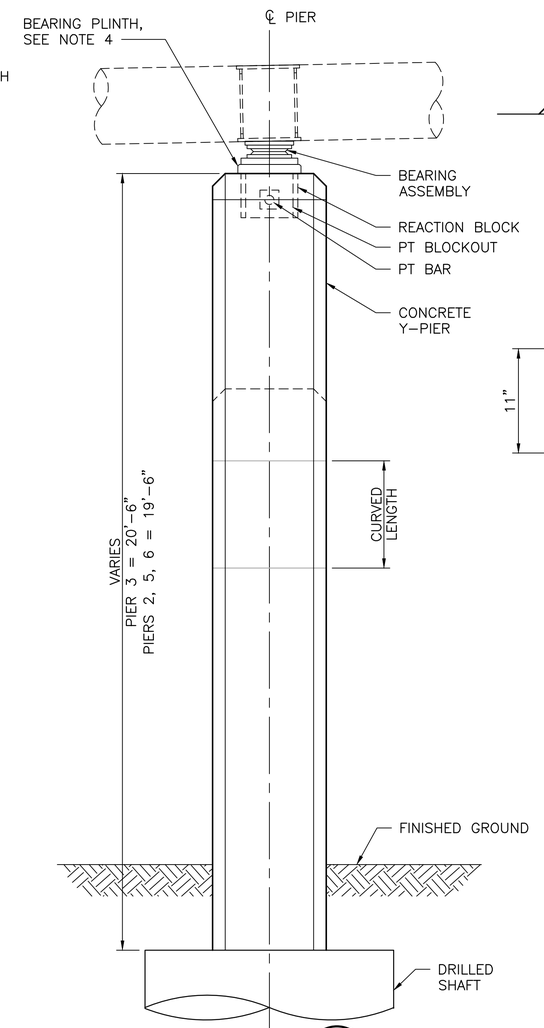

SECTION B

SCALE: ½" = 1'-0"

(P5 SHOWN WITHOUT ARCHES FOR CLARITY)

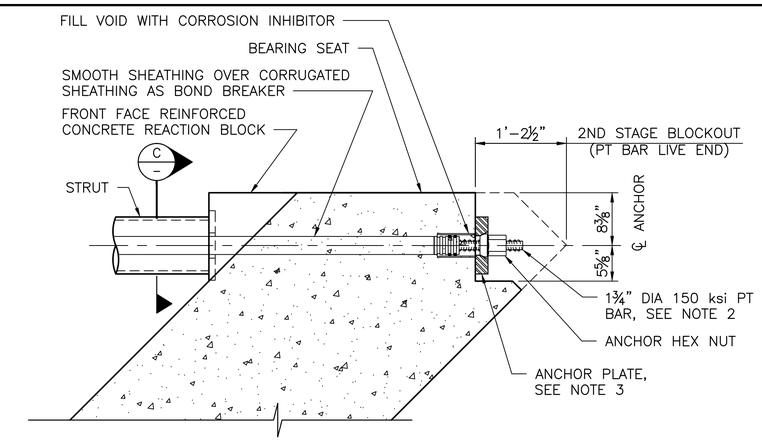

DETAIL 1

SCALE: 1" = 1'-0"
(EAST SIDE ONLY)

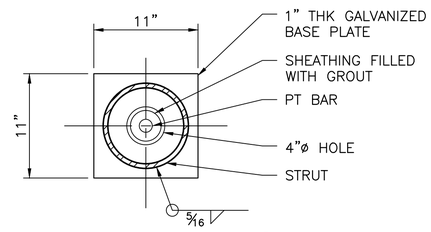

SECTION C

SCALE: 1½" = 1'-0"

TLC-S-122 TABLE 1: PIER DETAILS		
PIER	* DIM "C"	TOP OF PIER ELEV
P2	2.5'	162.36
P3	2.6'	163.57
P5	2.0'	159.07
P6	1.8'	156.11

* DIM "C" IS APPROXIMATE AND MEASURED AT ℄ PIER / ℄ BRIDGE.

NOTES:

1. FOR GENERAL STRUCTURAL NOTES SEE DWG TLC-S-101.
2. STRUT/TIE CONSISTS OF PT BAR WITHIN SHEATHING AND HOLLOW PIPE STRUT BETWEEN ARMS OF Y-PIER. PT BAR SHALL BE POST TENSIONED FROM LIVE END PRIOR TO RELEASE OF PIER FORMWORK IN ACCORDANCE WITH THE FOLLOWING POST TENSIONING SEQUENCE:
   a. PLACE CIP CONCRETE INCLUDING PIPE STRUT.
   b. AT 7 DAYS, STRIP FORMS, LEAVING THE Y-PIER ARMS SUPPORTED.
   c. POST TENSION THE THREAD BAR USING HYDRAULIC JACK TO 110 KIPS AND TIGHTEN ANCHOR NUT USING HAND TOOLS.
   d. RELEASE JACK.
   e. FINISH STRIPPING FORMS.
   f. GROUT ANNULUS AROUND PT BAR.
   g. POURBACK BLOCKOUT.
3. PT BAR DEAD END TO BE SECURED PRIOR TO CONCRETE PLACEMENT AND SHALL INCLUDE NUTS ON BOTH SIDES OF ANCHOR PLATE.
4. PIGMENTED SEALER SHALL BE APPLIED TO ALL FACES BELOW BEARING SEAT.
5. BEARING PLINTHS SHALL BE POURED SEPARATELY FROM THE PIER. PLINTHS SHALL BE SIZED TO BE 3" WIDER THAN THE BEARING MASONRY PLATE IN EACH DIRECTION, BUT SHALL BE AT LEAST 1" CLEAR OF EDGE OF PIER. PLINTH HEIGHT SHALL BE ESTABLISHED BASED ON ACTUAL BEARING HEIGHT, BUT SHALL BE 3" MIN TO 6" MAX. CONTRACTOR TO SUBMIT PLINTH DIMENSIONS TO ENGINEER OF RECORD FOR REVIEW PRIOR TO SETTING REBAR CAGE AND POURING PIER.
6. SEE NOTE 10 ON DWG TLC-S-145 REGARDING ELECTRICAL GROUNDING OF STRUCTURE.

CITY OF KIRKLAND
DEPARTMENT OF PUBLIC WORKS
123 FIFTH AVENUE KIRKLAND, WA 98033
(425) 587-3800 www.kirklandwa.gov

NO.	DATE	BY	APPR.	REVISION
0	2019/12/06	CHJS	MWBM	ISSUE FOR BID

MATTHEW D. BALGEMAN — STATE OF WASHINGTON — 46904 — PROFESSIONAL ENGINEER — 2019 DEC 6

COWI

SCVA	2019/12/06
DESIGNED BY:	DATE
CHJS	2019/12/06
DRAWN BY:	DATE
MWBM	2019/12/06
CHECKED BY:	DATE

CITY OF KIRKLAND
TOTEM LAKE CONNECTION

CONCRETE Y-PIER OUTLINE P2, P3, P5 & P6

SHEET: TLC-S-122
SCALE: AS SHOWN
FILENAME: A088367-S-122.dwg

File: D:\Projectwise\COWI\d0301252\A088367-S-122.dwg Save Date: Nov 26, 2019 1:21 PM Saved By: CHJS

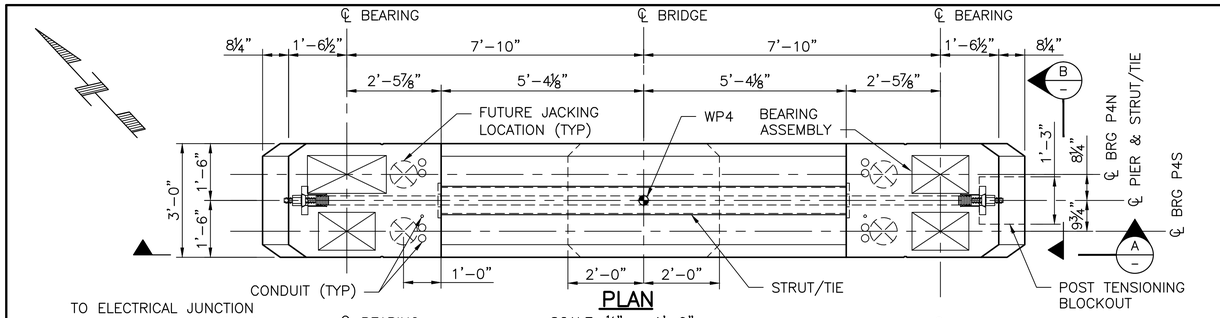

PLAN

SCALE: ½" = 1'-0"

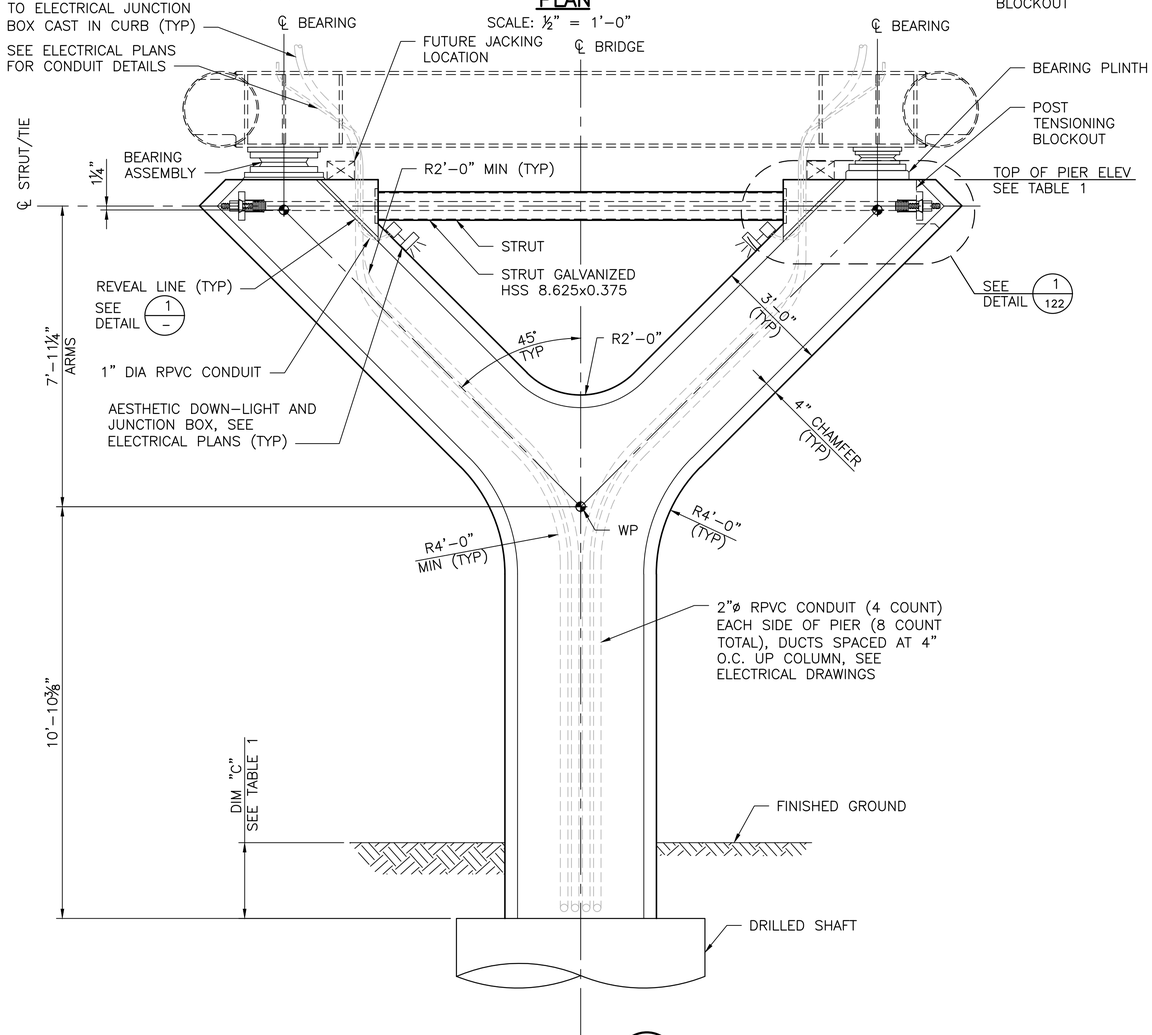

SECTION A

SCALE: ½" = 1'-0"

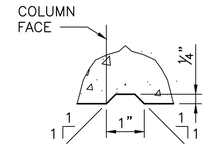

DETAIL 1

SCALE: 6" = 1'-0"

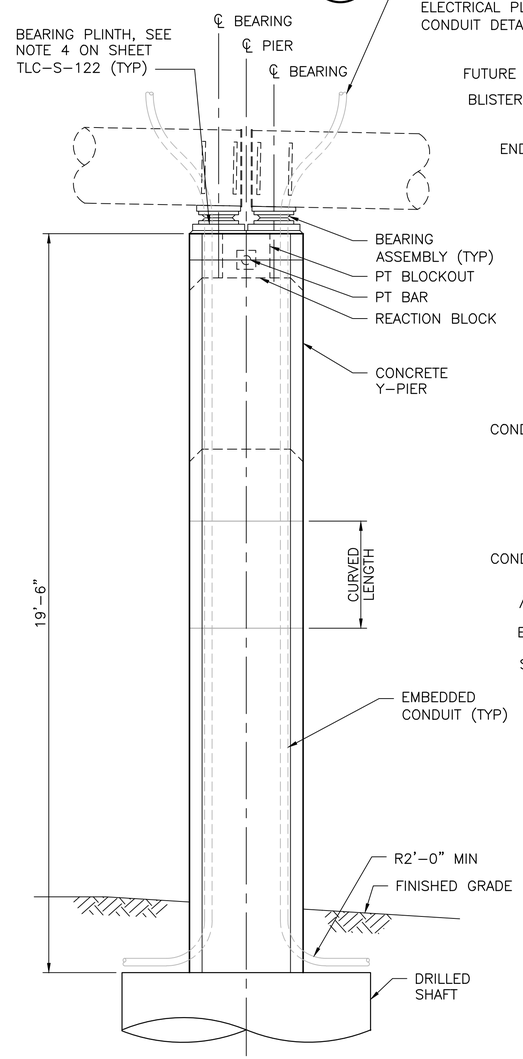

SECTION B

SCALE: ½" = 1'-0"

(SHOWN WITHOUT ARCHES FOR CLARITY)

TLC-S-123 TABLE 1: PIER DETAILS		
PIER	* DIM "C"	TOP OF PIER ELEV
P4	1.8'	162.79

* DIM "C" IS APPROXIMATE AND MEASURED AT ℄ PIER / ℄ BRIDGE.

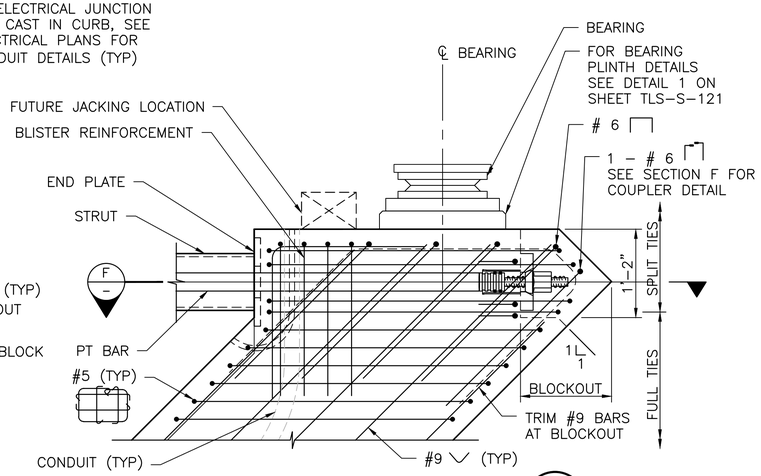

DETAIL 2

SCALE: 1" = 1'-0"
(PIER 4 ONLY)

124

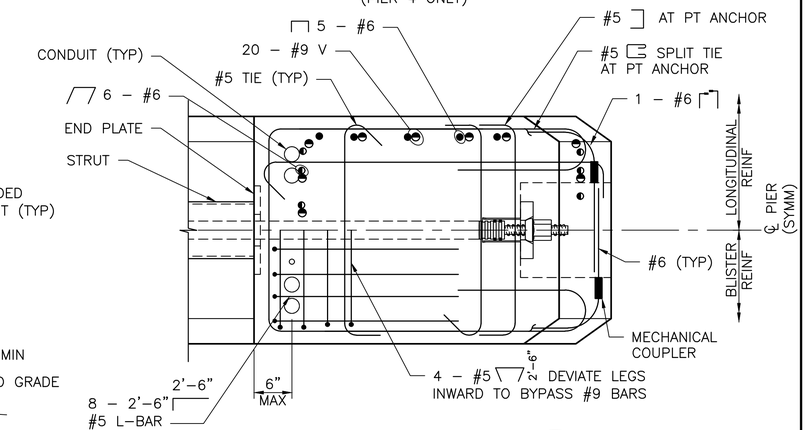

SECTION F

SCALE: 1" = 1'-0"
(PIER 4 ONLY)

NOTES:

1. FOR GENERAL STRUCTURAL NOTES SEE DWG TLC-S-101.
2. FOR NOTES AND DETAILS NOT SHOWN, SEE SHEET TLC-S-122.

CITY OF KIRKLAND
DEPARTMENT OF PUBLIC WORKS
123 FIFTH AVENUE KIRKLAND, WA 98033
(425) 587-3800 www.kirklandwa.gov

NO.	DATE	BY	APPR.	REVISION
0	2019/12/06	CHJS	MWBM	ISSUE FOR BID

MATTHEW D. BAUGHMAN — STATE OF WASHINGTON — STRUCTURAL ENGINEER — PROFESSIONAL ENGINEER — 2019 DEC 06

COWI

SCVA DESIGNED BY:	2019/12/06 DATE
CHJS DRAWN BY:	2019/12/06 DATE
MWBM CHECKED BY:	2019/12/06 DATE

CITY OF KIRKLAND
TOTEM LAKE CONNECTION

CONCRETE Y-PIER OUTLINE P4

SHEET: TLC-S-123
SCALE: AS SHOWN
FILENAME: A088367-S-123.dwg

File: D:\Projectwise\COWI\dt301252\A088367-S-123.dwg Save Date: Nov 26, 2019 1:22 PM Saved By: CHJS

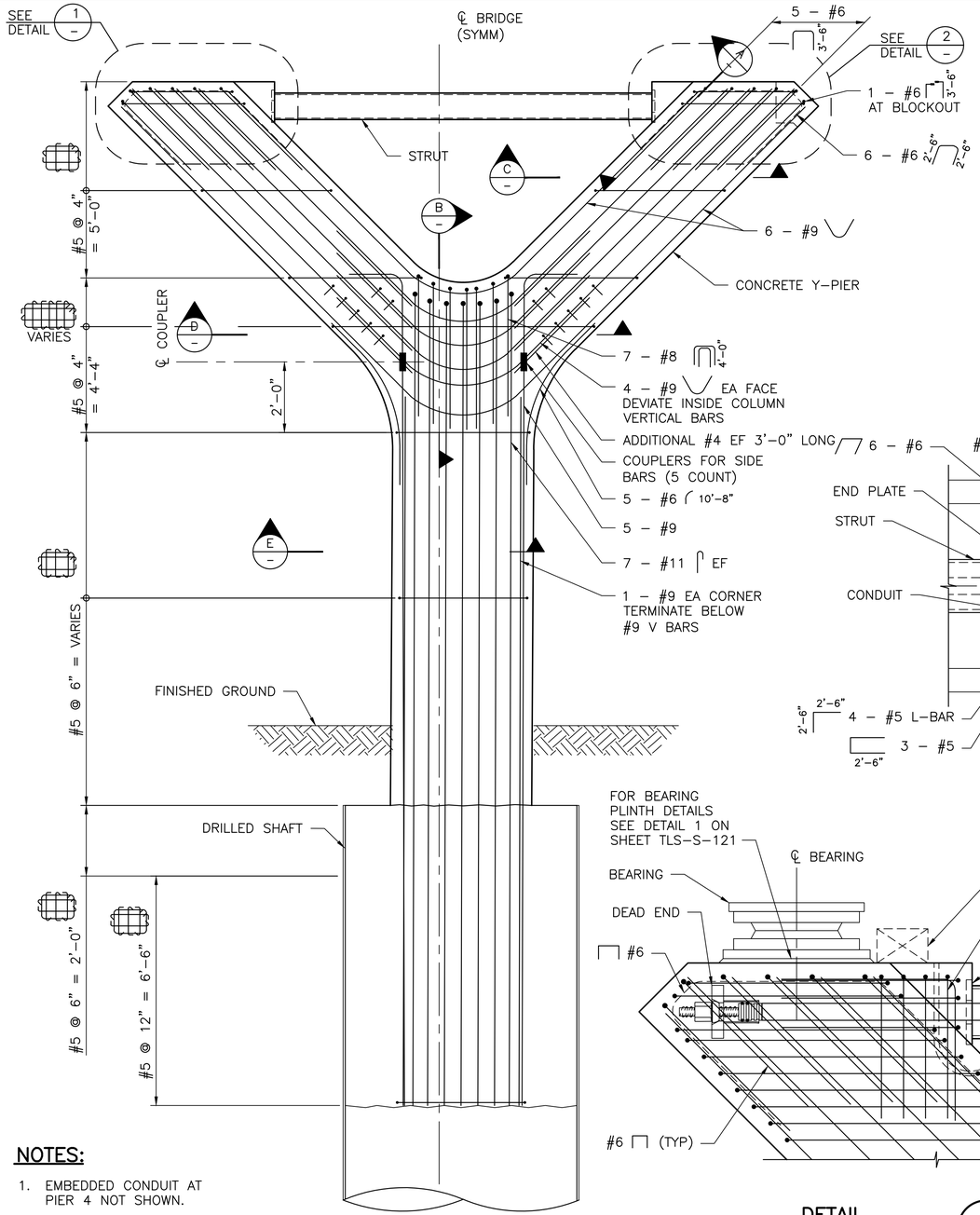

NOTES:

1. EMBEDDED CONDUIT AT PIER 4 NOT SHOWN.

TYPICAL Y–PIER REINFORCEMENT

SCALE: ½" = 1'–0"

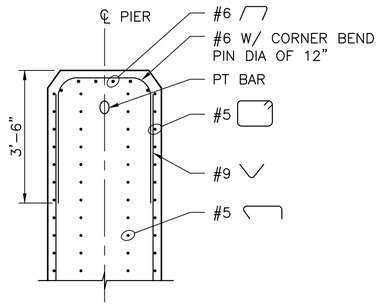

SECTION A

SCALE: ½" = 1'–0"

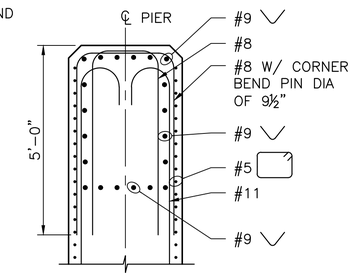

SECTION B

SCALE: ½" = 1'–0"

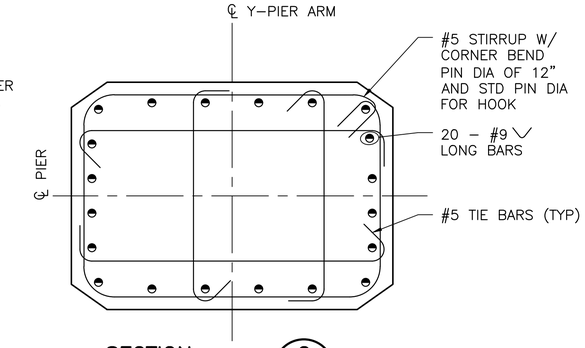

SECTION C

SCALE: 1" = 1'–0"

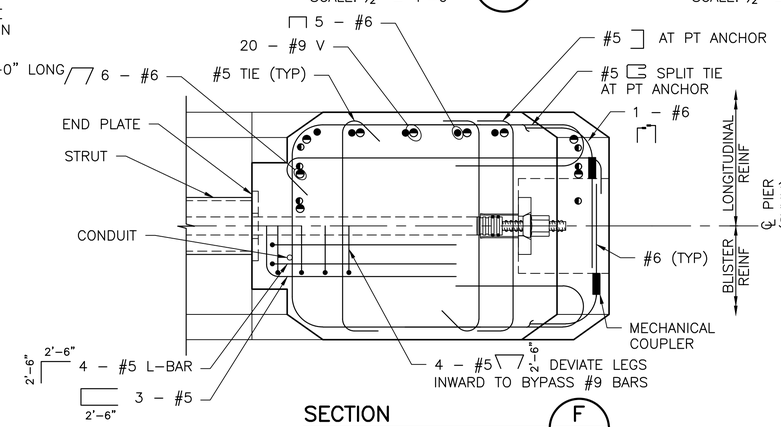

SECTION F

SCALE: 1" = 1'–0"
(SEE TLC–S–123 FOR PIER 4)

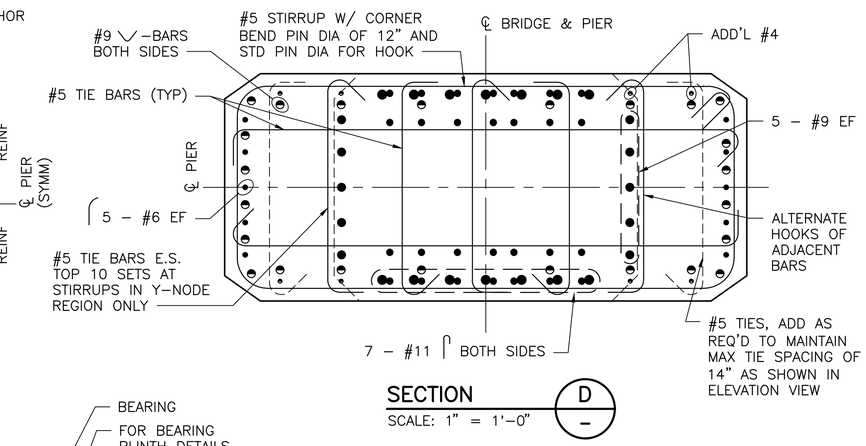

SECTION D

SCALE: 1" = 1'–0"

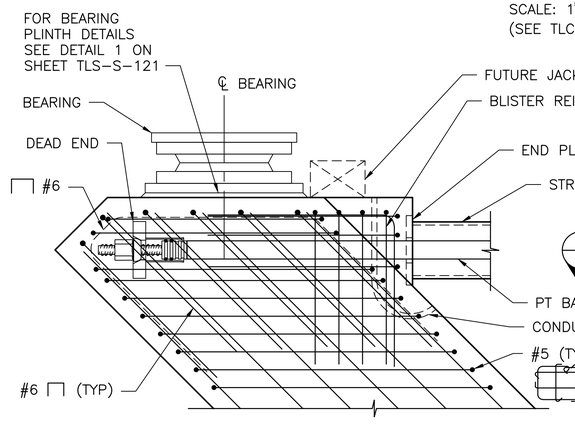

DETAIL 1

SCALE: 1" = 1'–0"

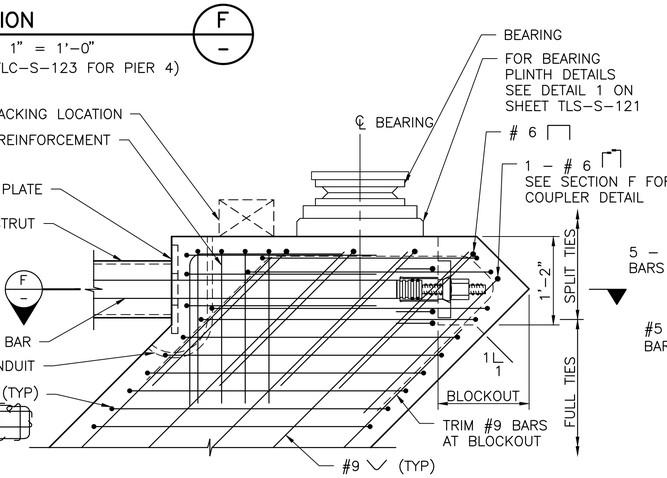

DETAIL 2

SCALE: 1" = 1'–0"

NOTES:

1. FOR GENERAL NOTES, SEE DWG TLC–S–101.

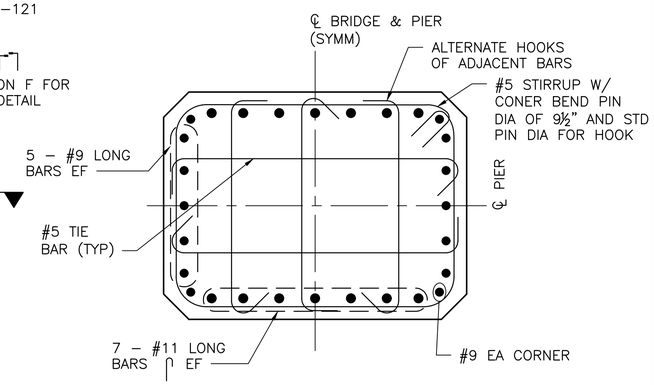

SECTION E

SCALE: 1" = 1'–0"

CITY OF KIRKLAND
DEPARTMENT OF PUBLIC WORKS
123 FIFTH AVENUE KIRKLAND, WA 98033
(425) 587-3800 www.kirklandwa.gov

NO.	DATE	BY	APPR.	REVISION
0	2019/12/06	CHJS	MWBM	ISSUE FOR BID

MATTHEW D. BAUGHMAN — STATE OF WASHINGTON — 47800 — PROFESSIONAL ENGINEER — 2019 DEC 6

COWI

SCVA	2019/12/06
DESIGNED BY:	DATE
CHJS	2019/12/06
DRAWN BY:	DATE
MWBM	2019/12/06
CHECKED BY:	DATE

CITY OF KIRKLAND
TOTEM LAKE CONNECTION

CONCRETE Y–PIER REINFORCEMENT

SHEET: TLC–S–124
SCALE: AS SHOWN
FILENAME: A088367–S–124.dwg

File: D:\Projectwise\COWI\d0301252\A088367-S-124.dwg Save Date: Nov 26, 2019 1:22 PM Saved By: CHJS

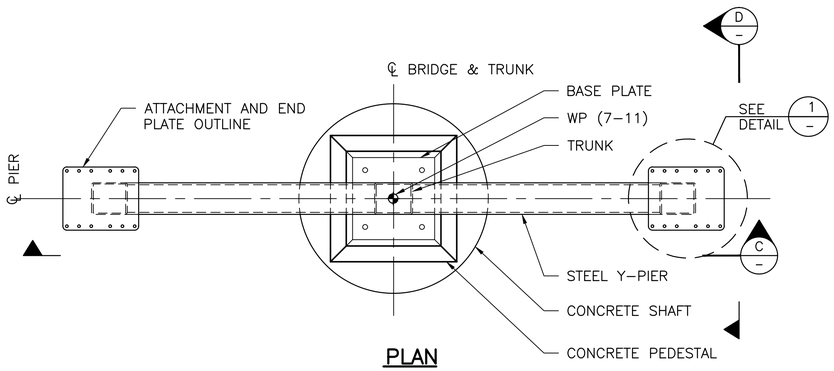

PLAN
SCALE: ½" = 1'–0"

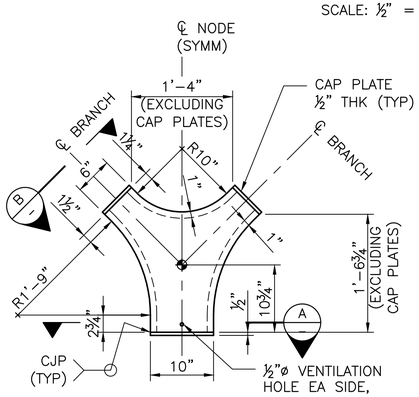

NODE DETAIL
SCALE: 1" = 1'–0"

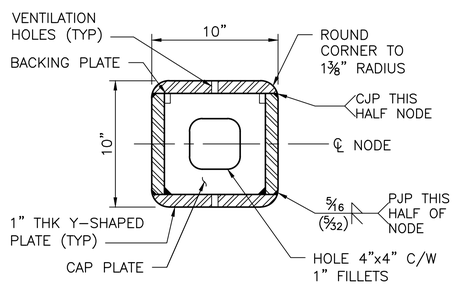

SECTION A
SCALE: 2" = 1'–0"

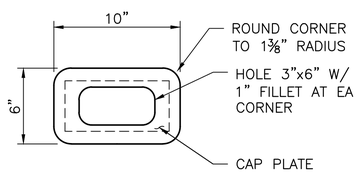

SECTION B
SCALE: 2" = 1'–0"

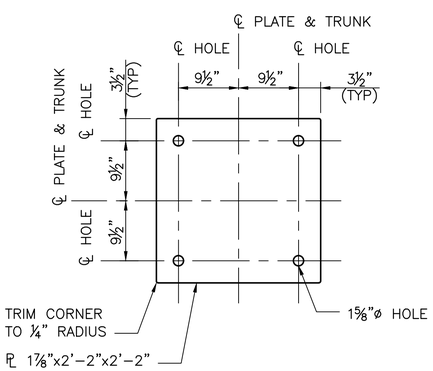

BASE PLATE DETAIL
SCALE: 1" = 1'–0"

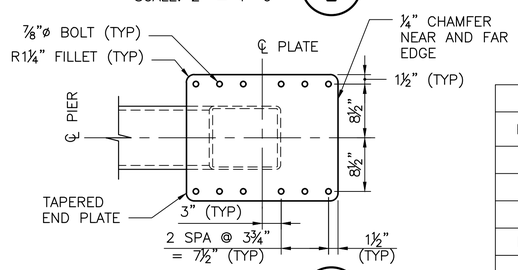

DETAIL 1
SCALE: 1" = 1'–0"

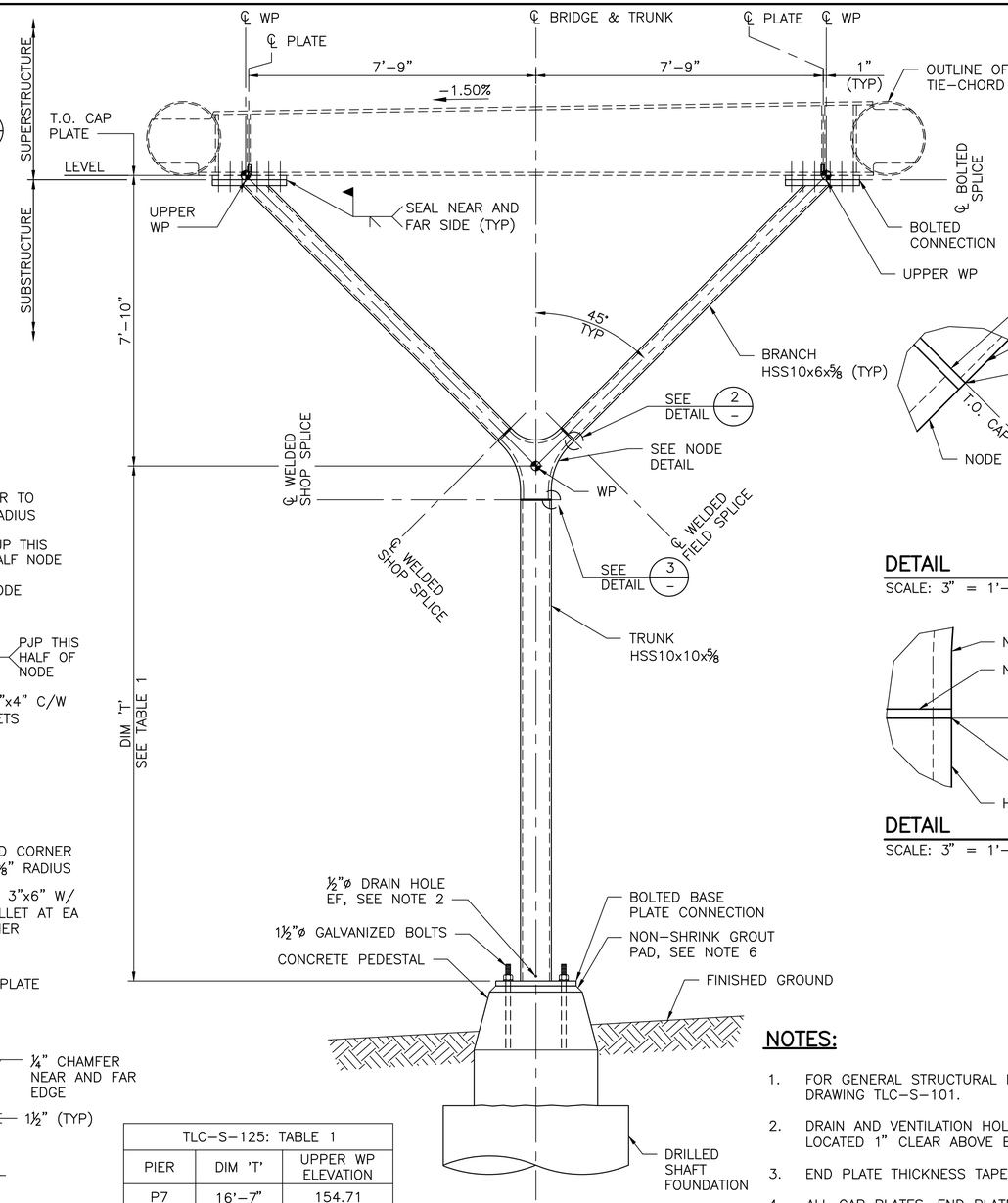

SECTION C
SCALE: ½" = 1'–0"

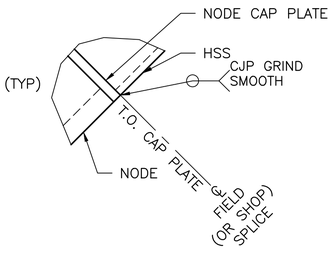

DETAIL 2
SCALE: 3" = 1'–0"

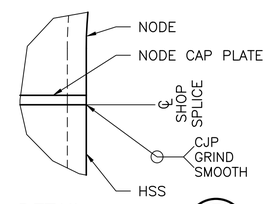

DETAIL 3
SCALE: 3" = 1'–0"

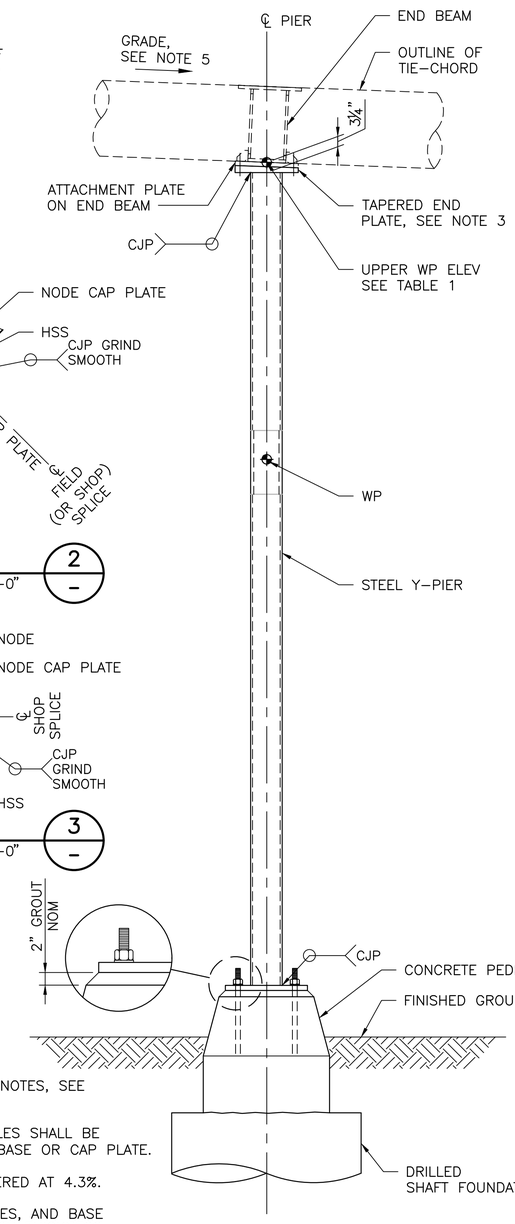

SECTION D
SCALE: ½" = 1'–0"

TLC–S–125: TABLE 1		
PIER	DIM 'T'	UPPER WP ELEVATION
P7	16'–7"	154.71
P8	17'–11"	152.49
P9	16'–5"	150.28
P10	13'–8"	148.06
P11	8'–1"	146.21

NOTES:

1. FOR GENERAL STRUCTURAL NOTES, SEE DRAWING TLC–S–101.
2. DRAIN AND VENTILATION HOLES SHALL BE LOCATED 1" CLEAR ABOVE BASE OR CAP PLATE.
3. END PLATE THICKNESS TAPERED AT 4.3%.
4. ALL CAP PLATES, END PLATES, AND BASE PLATES SHALL HAVE THROUGH THICKNESS PROPERTIES IN ACCORDANCE WITH ASTM A770.
5. GRADE VARIES BETWEEN INNER AND OUTER TIE–CHORDS; END BEAM GRADE FOLLOWS L–10 @ 4.3%.
6. USE LEVELING NUTS UNDER TRUNK BASE PLATE PRIOR TO GROUTING.

CITY OF KIRKLAND
DEPARTMENT OF PUBLIC WORKS
123 FIFTH AVENUE KIRKLAND, WA 98033
(425) 587-3800 www.kirklandwa.gov

NO.	DATE	BY	APPR.	REVISION
0	2019/12/06	CHJS	MWBM	ISSUE FOR BID

MATTHEW D. BALGAMAN — STATE OF WASHINGTON — PROFESSIONAL ENGINEER — 2019 DEC 06

COWI

SCVA	2019/12/06	DESIGNED BY: DATE
CHJS	2019/12/06	DRAWN BY: DATE
MWBM	2019/12/06	CHECKED BY: DATE

CITY OF KIRKLAND
TOTEM LAKE CONNECTION

STEEL Y–PIERS

SHEET: TLC–S–125
SCALE: AS SHOWN
FILENAME: A088367–S–125.dwg

File: D:\Projectwise\COWI\d0301252\A088367-S-125.dwg Save Date: Nov 26, 2019 1:21 PM Saved By: CHJS

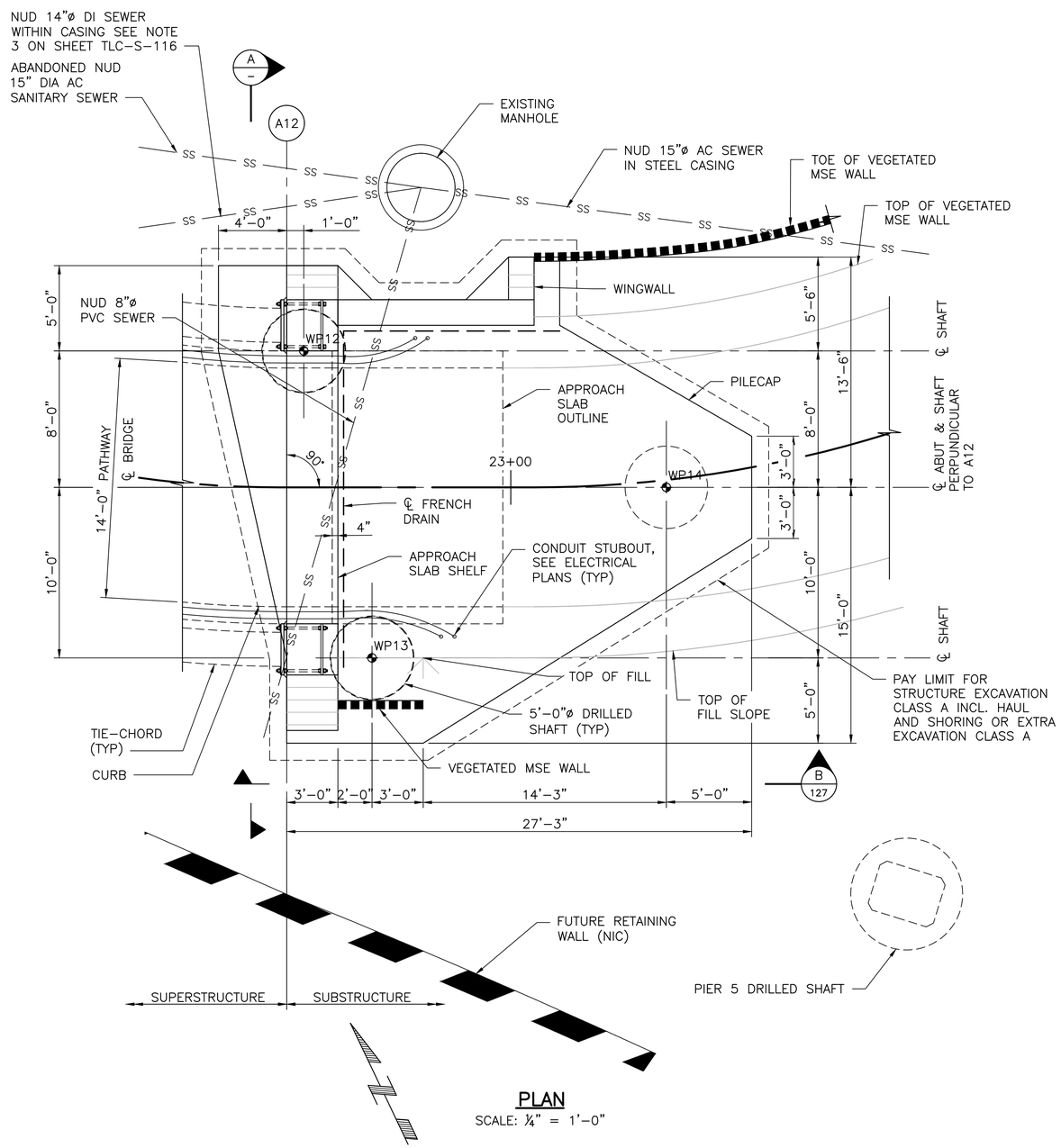

PLAN

SCALE: ¼" = 1'–0"

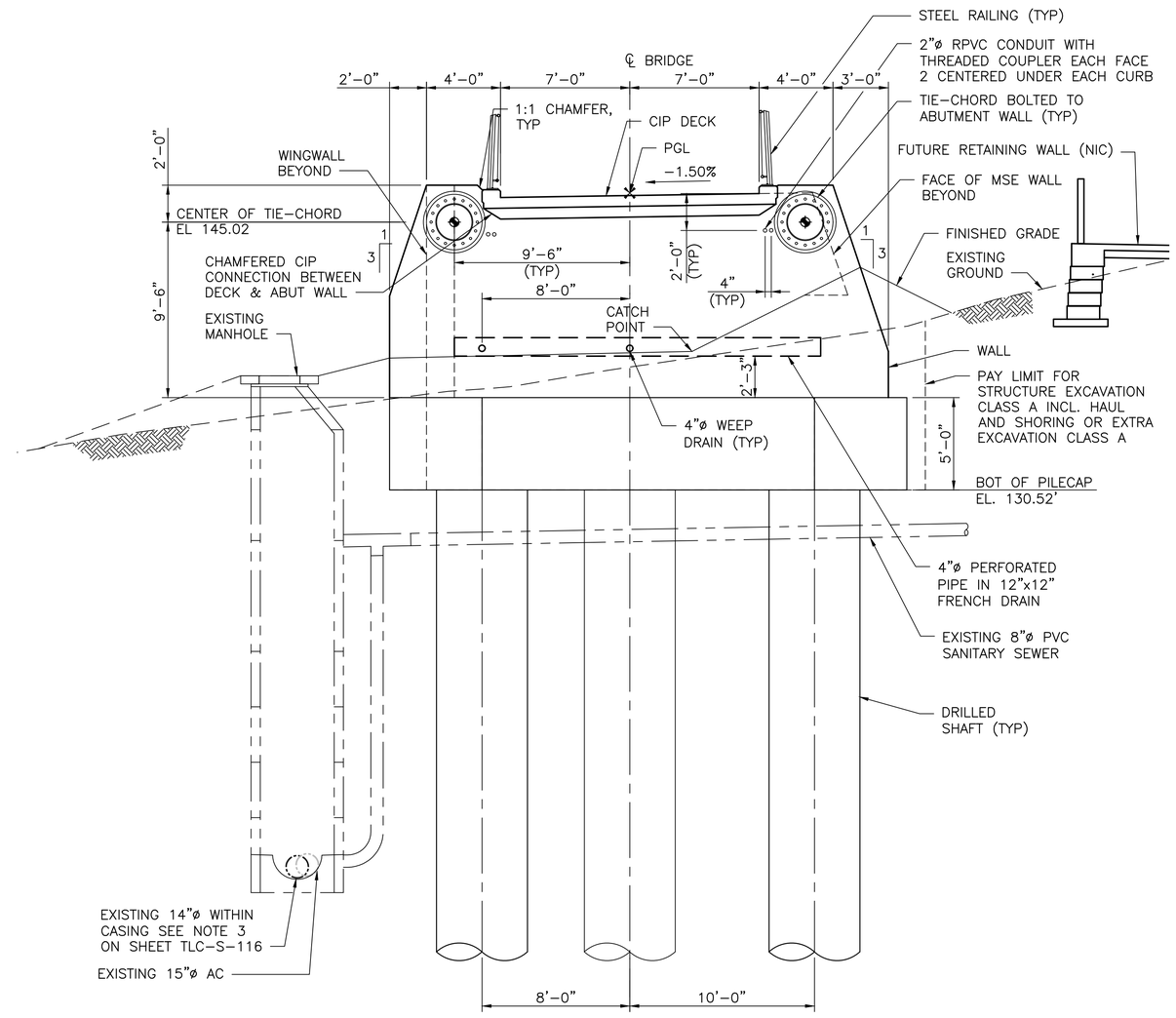

SECTION A

SCALE: ¼" = 1'–0"

NOTES:

1. FOR GENERAL STRUCTURAL NOTES SEE DWG TLC –S–101.
2. NUD = NORTHSHORE UTILITY DISTRICT

CITY OF KIRKLAND
DEPARTMENT OF PUBLIC WORKS
123 FIFTH AVENUE KIRKLAND, WA 98033
(425) 587-3800 www.kirklandwa.gov

NO.	DATE	BY	APPR.	REVISION
0	2019/12/06	CHJS	MWBM	ISSUE FOR BID

MATTHEW D. BAUGHMAN — STATE OF WASHINGTON — 2019 DEC 06 — PROFESSIONAL ENGINEER

COWI

SCVA DESIGNED BY:	2019/12/06 DATE
CHJS DRAWN BY:	2019/12/06 DATE
MWBM CHECKED BY:	2019/12/06 DATE

CITY OF KIRKLAND
TOTEM LAKE CONNECTION

NORTH ABUTMENT OUTLINE – SHEET 1

SHEET: TLC–S–126
SCALE: AS SHOWN
FILENAME: A088367–S–126.dwg

File: D:\Projectwise\COWI\d0301252\A088367-S-126.dwg Save Date: Nov 26, 2019 1:21 PM Saved By: KNBR

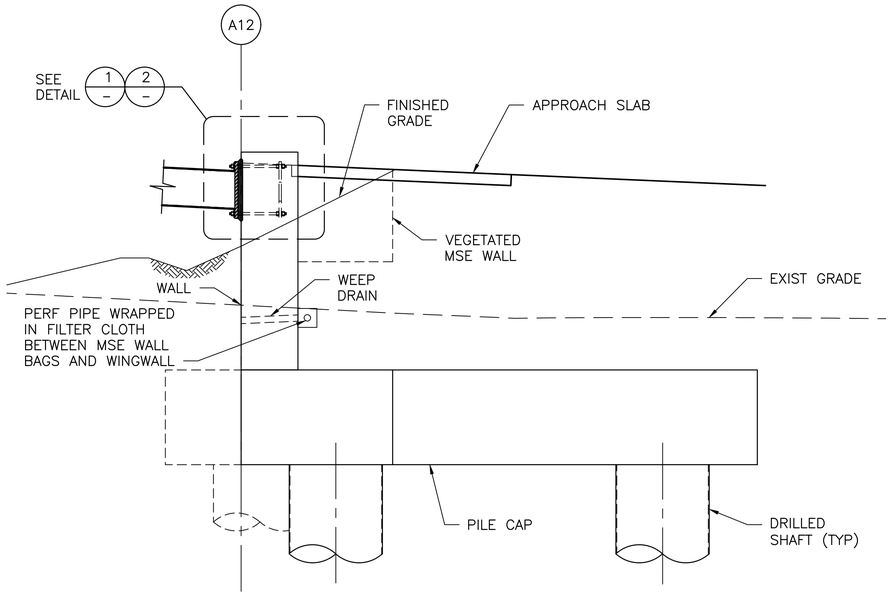

SECTION B 126
SCALE: ¼" = 1'–0"

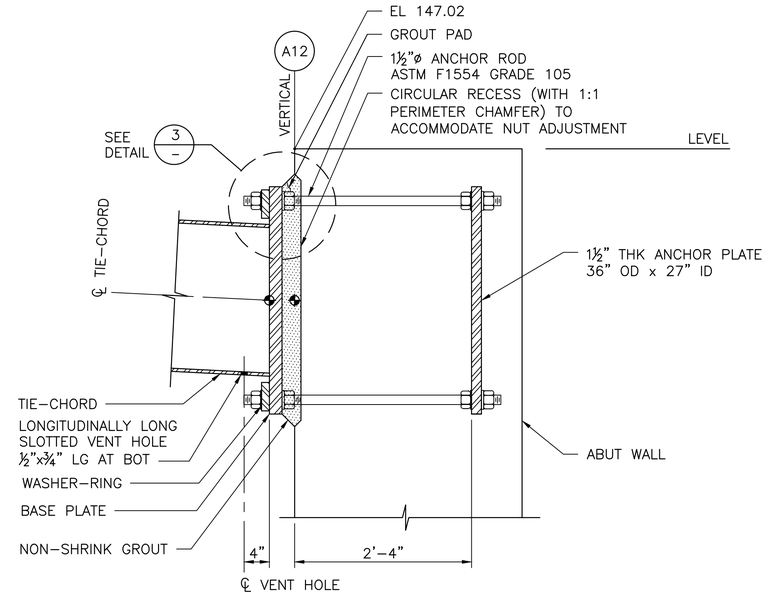

DETAIL 1 –
SCALE: 1" = 1'–0"
FOR DETAILS OF BASE PLATE AND WASHER RING, SEE DWG S–136

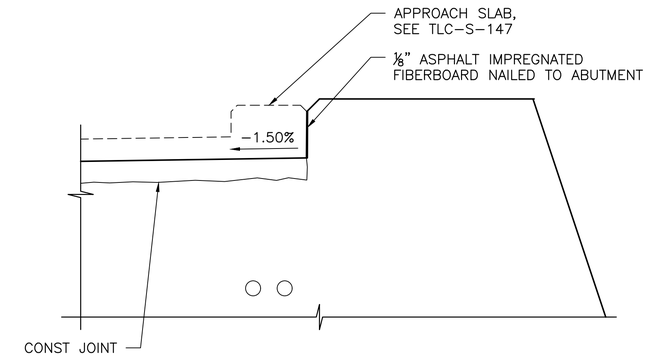

SECTION C –
SCALE: 1" = 1'–0"

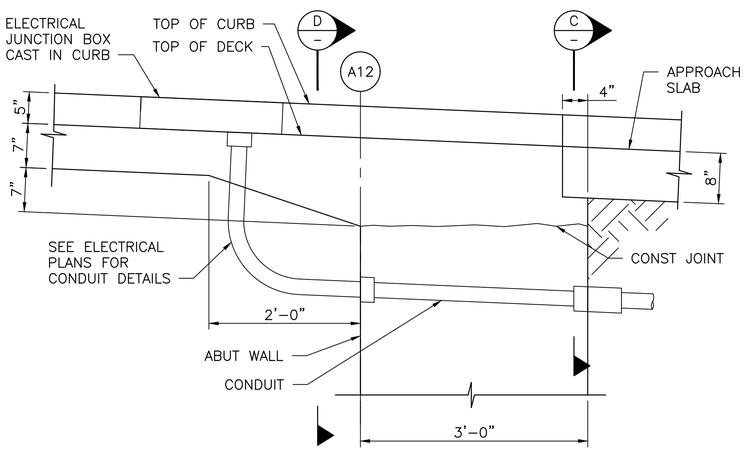

DETAIL 2 –
SCALE: 1" = 1'–0"

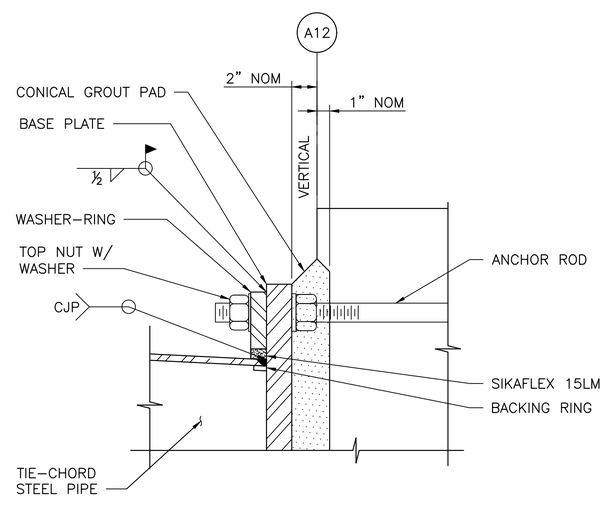

DETAIL 3 –
SCALE: 2" = 1'–0"

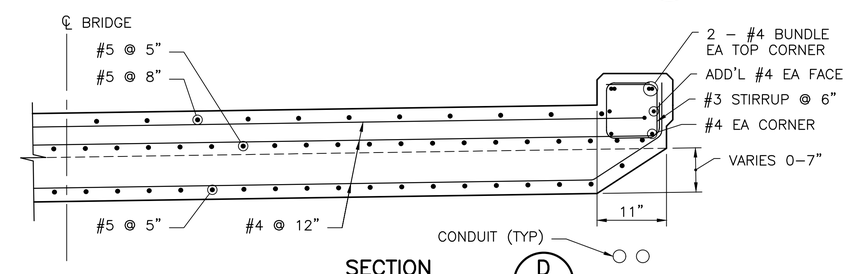

SECTION D –
SCALE: 1" = 1'–0"

NOTES:

1. FOR GENERAL STRUCTURAL NOTES SEE DWG TLC–S–101.
2. ANCHOR RODS TO BE INSTALLED AS NORMAL TO WALL FACE USING TEMPLATE FROM FABRICATOR OF TIE–CHORD TO ENSURE CORRECT HOLE ORIENTATION.
3. TIE–CHORDS TO BE INSTALLED ON THE ANCHOR RODS WITH TEMP. VERTICAL SUPPORT ON CRIBBING AT ABUTMENT AND OTHER END ON PIER P11. WASHER RING SHALL BE WELDED, PROFILE OF TIE–CHORDS ESTABLISHED, BACK AND FRONT NUTS HAND TIGHTENED, THEN GROUT PAD INSTALLED PRIOR TO PLACING PRECAST PANELS.
4. SEE NOTE 10 ON DWG TLC–S–145 REGARDING ELECTRICAL GROUNDING OF STRUCTURE.

CITY OF KIRKLAND
DEPARTMENT OF PUBLIC WORKS
123 FIFTH AVENUE KIRKLAND, WA 98033
(425) 587-3800 www.kirklandwa.gov

NO.	DATE	BY	APPR.	REVISION
0	2019/12/06	CHJS	MWBM	ISSUE FOR BID

MATTHEW D. BAUGHMAN — STATE OF WASHINGTON — U.S. STRUCTURAL ENGINEER — PROFESSIONAL ENGINEER — 2019 DEC 06

COWI

SCVA DESIGNED BY:	2019/12/06 DATE
CHJS DRAWN BY:	2019/12/06 DATE
MWBM CHECKED BY:	2019/12/06 DATE

CITY OF KIRKLAND
TOTEM LAKE CONNECTION

NORTH ABUTMENT OUTLINE – SHEET 2

SHEET: TLC–S–127
SCALE: AS SHOWN
FILENAME: A088367–S–127.dwg

File: D:\Projectwise\COW\d0301252\A088367-S-127.dwg Save Date: Nov 06, 2019 11:42 AM Saved By: CHJS

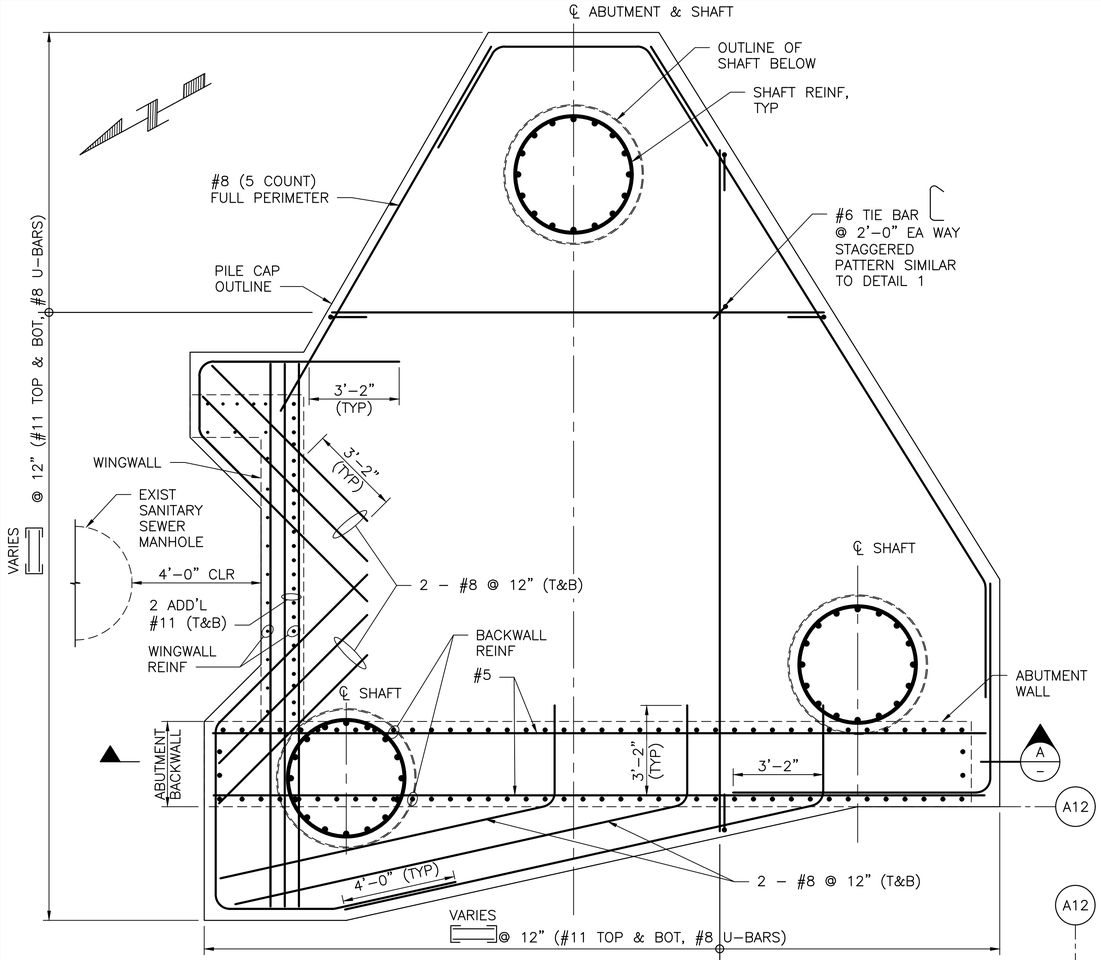

PLAN

SCALE: ⅜" = 1'-0"
(ABUTMENT WALL TIE REINFORCEMENT NOT SHOWN FOR CLARITY)

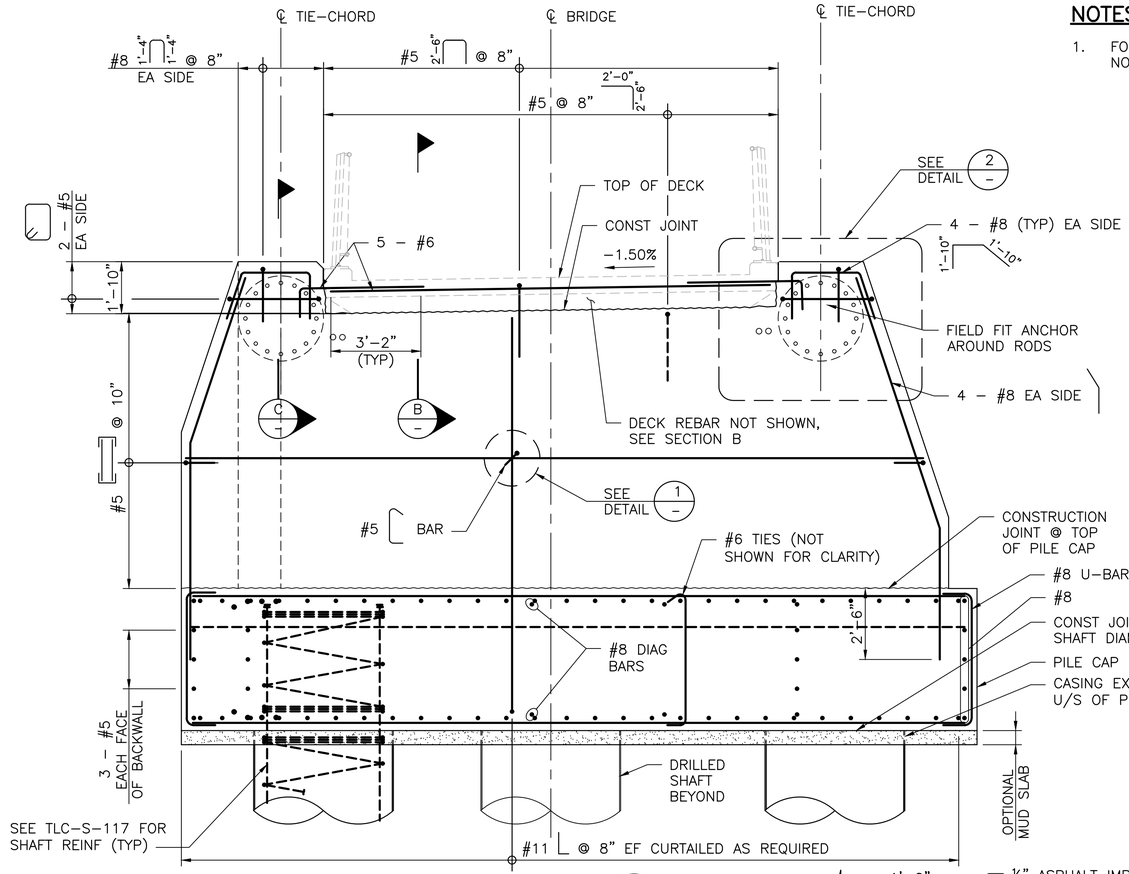

SECTION A

SCALE: ⅜" = 1'-0"

NOTES:

1. FOR GENERAL STRUCTURAL NOTES SEE DWG TLC-S-101.

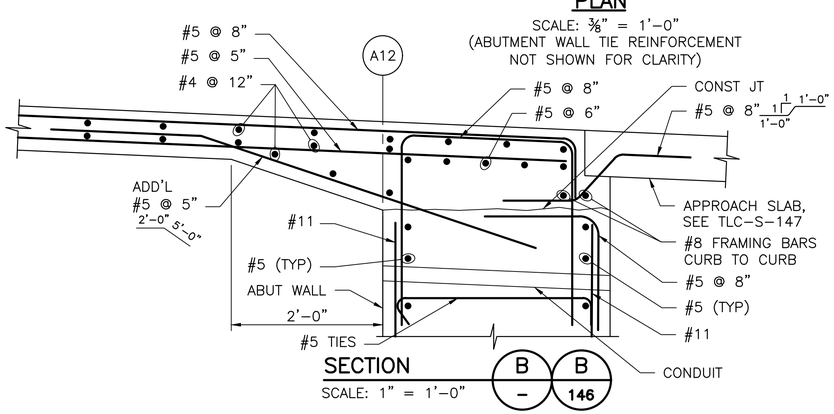

SECTION B B

SCALE: 1" = 1'-0"

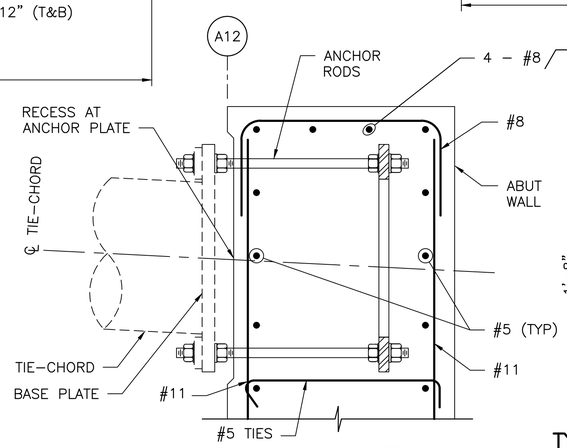

SECTION C

SCALE: 1" = 1'-0"

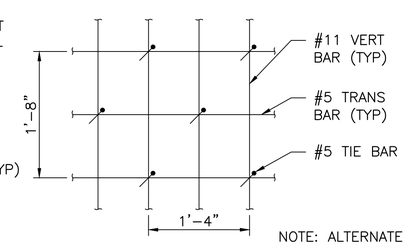

NOTE: ALTERNATE TIE DIRECTION ON EVERY OTHER BAR

TYPICAL TIE BAR WALL SPACING DETAIL 1

SCALE: 1" = 1'-0"

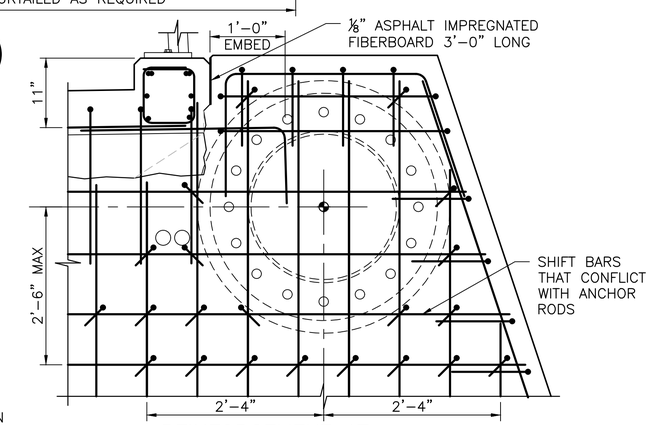

REINFORCEMENT AT TIE-CHORD DETAIL 2

SCALE: 1" = 1'-0"

CITY OF KIRKLAND
DEPARTMENT OF PUBLIC WORKS
123 FIFTH AVENUE KIRKLAND, WA 98033
(425) 587-3800 www.kirklandwa.gov

NO.	DATE	BY	APPR.	REVISION
0	2019/12/06	CHJS	MWBM	ISSUE FOR BID

MATTHEW D. BAUGHMAN, STATE OF WASHINGTON, STRUCTURAL ENGINEER, PROFESSIONAL ENGINEER
2019 DEC 06

COWI

SCVA DESIGNED BY:	2019/12/06 DATE
CHJS DRAWN BY:	2019/12/06 DATE
MWBM CHECKED BY:	2019/12/06 DATE

CITY OF KIRKLAND
TOTEM LAKE CONNECTION

NORTH ABUTMENT REINFORCEMENT

SHEET: TLC-S-128
SCALE: AS SHOWN
FILENAME: A088367-S-128.dwg

File: D:\Projectwise\COWI\d0301252\A088367-S-128.dwg Save Date: Oct 31, 2019 10:29 AM Saved By: CHJS

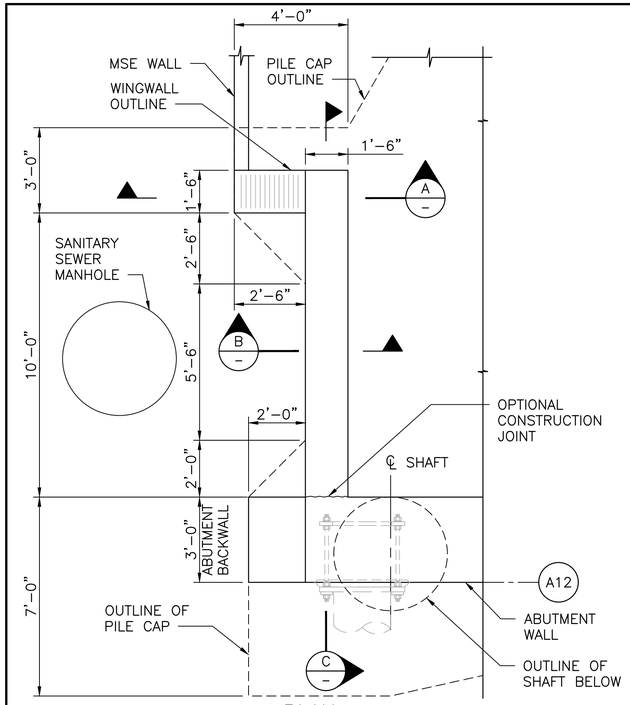

PLAN

SCALE: ⅜" = 1'-0"
(ABUTMENT PILE CAP REINFORCEMENT NOT SHOWN FOR CLARITY)

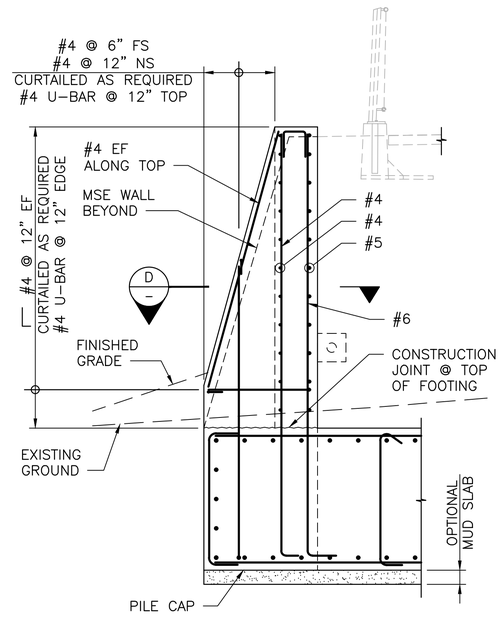

SECTION A

SCALE: ⅜" = 1'-0"

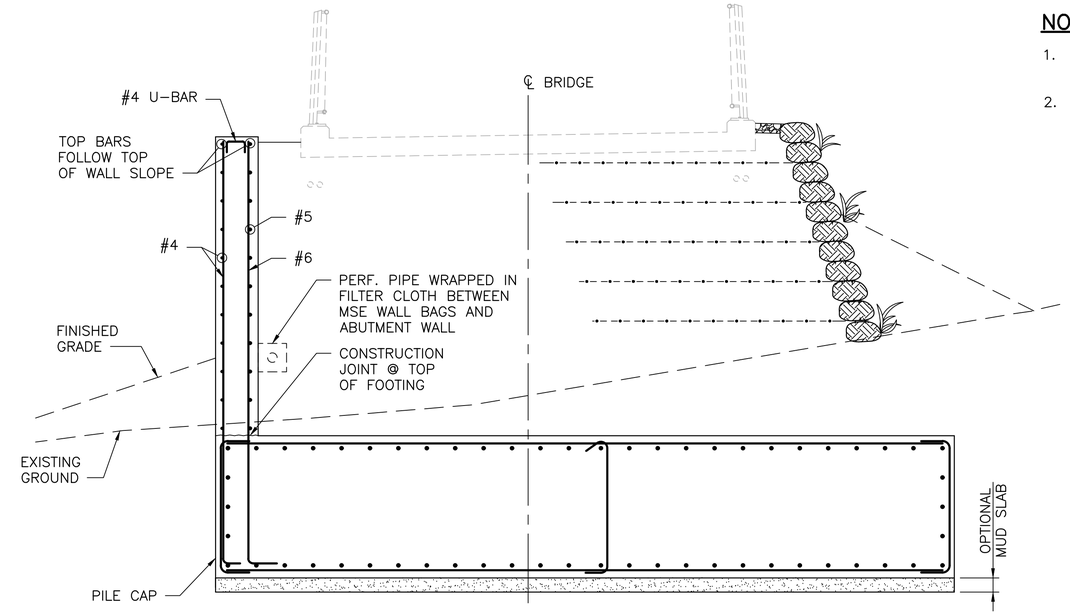

SECTION B

SCALE: ⅜" = 1'-0"

NOTES:

1. FOR GENERAL STRUCTURAL NOTES SEE DWG TLC-S-101.
2. SEE SHEET TLC-S-128 FOR ABUTMENT WALL AND PILE CAP REINFORCEMENT.

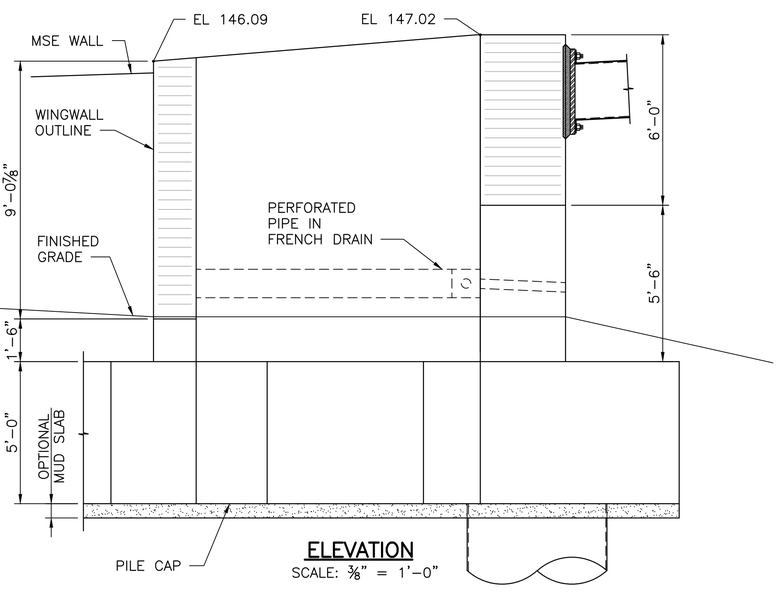

ELEVATION

SCALE: ⅜" = 1'-0"

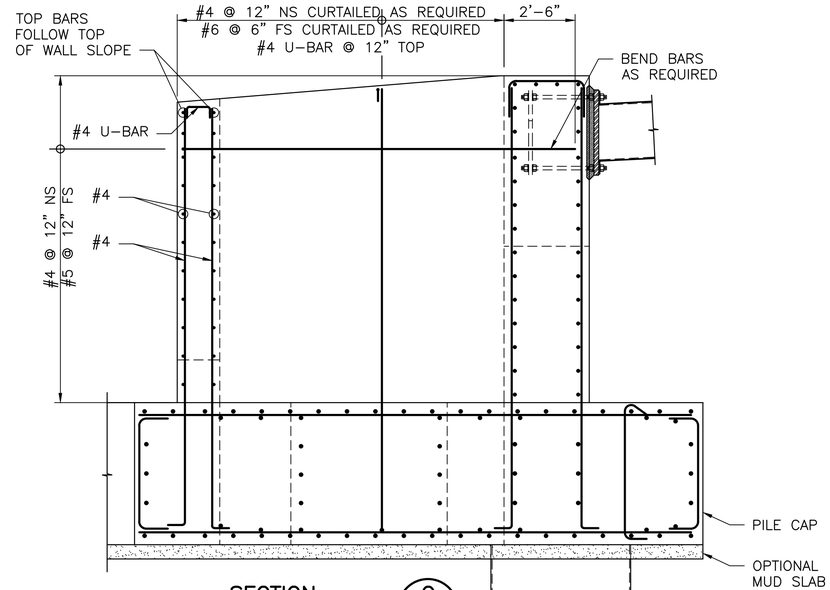

SECTION C

SCALE: ⅜" = 1'-0"

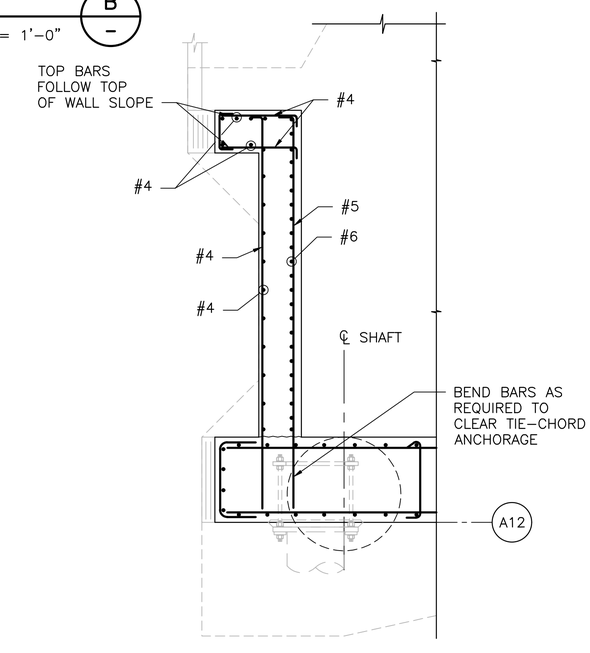

SECTION D

SCALE: ⅜" = 1'-0"

File: D:\Projectwise\COWI\d0301252\A088367-S-129.dwg Save Date: Nov 26, 2019 1:23 PM Saved By: CHJS

CITY OF KIRKLAND
DEPARTMENT OF PUBLIC WORKS
123 FIFTH AVENUE KIRKLAND, WA 98033
(425) 587-3800 www.kirklandwa.gov

NO.	DATE	BY	APPR.	REVISION
0	2019/12/06	CHJS	MWBM	ISSUE FOR BID

MATTHEW D. BAUGHMAN, STATE OF WASHINGTON, STRUCTURAL ENGINEER, PROFESSIONAL ENGINEER
2019 DEC 06

COWI

SCVA DESIGNED BY:	2019/12/06 DATE
CHJS DRAWN BY:	2019/12/06 DATE
MWBM CHECKED BY:	2019/12/06 DATE

CITY OF KIRKLAND
TOTEM LAKE CONNECTION

NORTH ABUTMENT WINGWALL

SHEET: TLC-S-129
SCALE: AS SHOWN
FILENAME: A088367-S-129.dwg

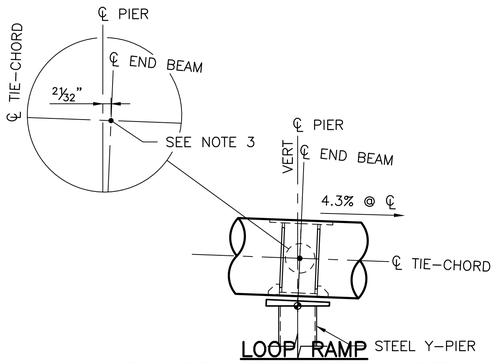

END BEAM DIMENSIONING DETAIL

SCALE: ½" = 1'-0"
(ONLY WITHIN LOOP RAMP)

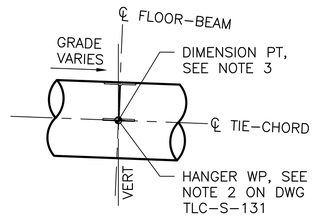

FLOOR-BEAM DIMENSIONING DETAIL

SCALE: ½" = 1'-0"

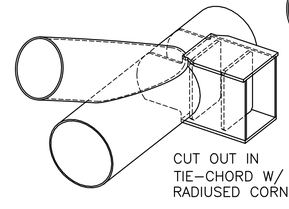

ASSEMBLED VIEW

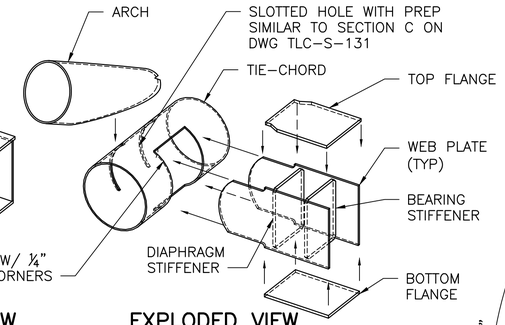

EXPLODED VIEW

END BEAM ISOMETRIC DETAIL

SCALE: ½" = 1'-0"

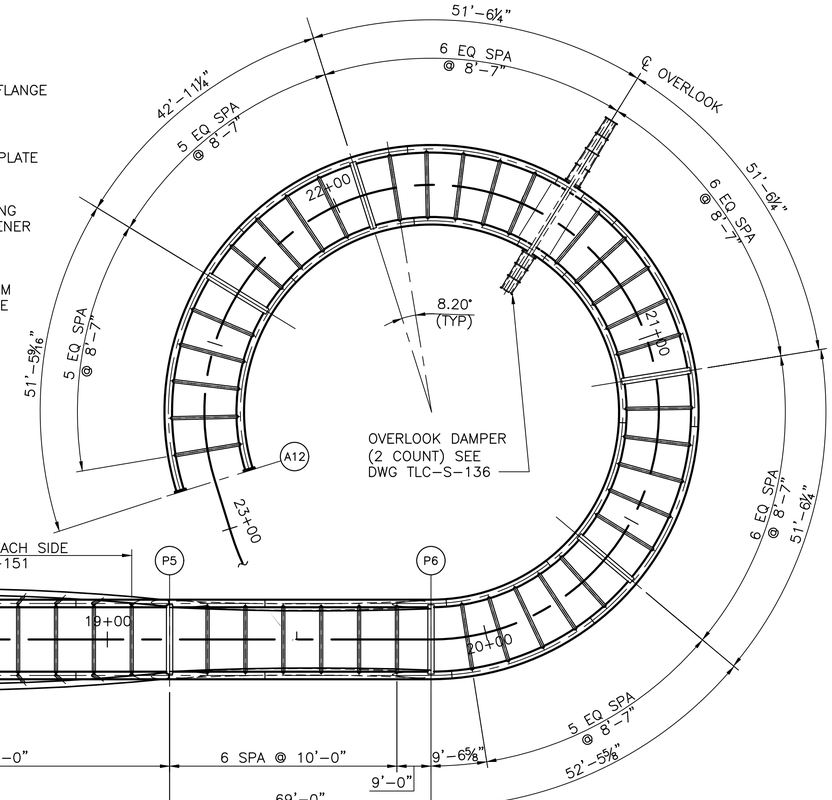

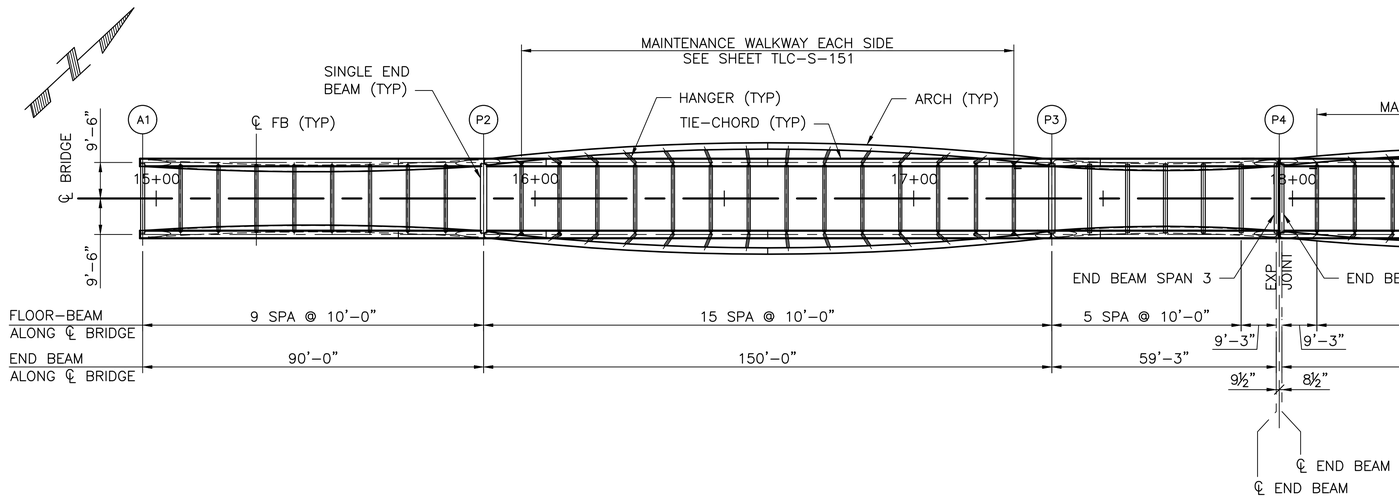

FRAMING PLAN

SCALE: 1" = 20'

TLC-S-130 TABLE 1: HANGER TYPES											
ID	TYPE	COUNT	BENT PLATE	ID	TYPE	COUNT	BENT PLATE	ID	TYPE	COUNT	BENT PLATE
H1	A	2	NO	H8	B	4	NO	H15	A	2	NO
	D	2	YES	H9	B	4	NO		B	2	NO
H2	A	2	NO	H10	B	4	NO	H16	A	4	NO
	C	2	YES	H11	A	2	NO	H17	A	4	NO
H3	A	2	NO		C	2	YES	H18	A	2	NO
	C	2	YES	H12	B	2	NO	H19	C	2	YES
H4	D	4	YES	H13	B	2	NO	H20	B	2	NO
H5	C	4	YES		D	2	YES	H21	A	2	NO
H6	B	4	NO	H14	A	2	NO	H22	B	2	NO
H7	B	4	NO		C	2	YES				

TLC-S-130 TABLE 2: HANGER DIMENSIONS		
TYPE	WALL THICKNESS	SIZE
A	0.25"	HSS 7.5
B	0.375"	HSS 7.5
C	0.5"	HSS 7.5
D	REINFORCED 0.5"	HSS 7.5

NOTES:

1. FOR GENERAL STRUCTURAL NOTES SEE DWG TLC-S-101.
2. ALL TIE-CHORDS, ARCHES, HANGERS, AND END BEAMS SHALL BE FABRICATED AS FRACTURE CRITICAL MEMBERS (FCM).
3. FLOOR-BEAM AND END BEAM SPACING IS MEASURED IN PLAN AT CENTERLINE OF TIE-CHORDS.
4. PRECAMBER OF SPANS 1-5 NOT REQUIRED.
5. FOR ILLUSTRATION OF HANGER LENGTH, SEE DWG TLC-S-132 SECTION B.
6. ARCH PIPES ARE 20"OD x ½".
7. TIE-CHORDS ARE 24" OD AND PARALLEL IN PLAN.
8. ARCHES AND HANGER GEOMETRY IS SYMMETRIC ABOUT BRIDGE CENTERLINE.
9. HANGERS ARE HSS 7.500, UNO.
10. EACH END-BEAM SHALL INCLUDE A ⅜" DIA DRAIN HOLE CENTERED WITHIN THE BOTTOM FLANGE AT ITS MIDSPAN.

CITY OF KIRKLAND
DEPARTMENT OF PUBLIC WORKS
123 FIFTH AVENUE KIRKLAND, WA 98033
(425) 587-3800 www.kirklandwa.gov

NO.	DATE	BY	APPR.	REVISION
0	2019/12/06	CHJS	MWBM	ISSUE FOR BID

MATTHEW D. BALGIMAN, STATE OF WASHINGTON, 2019 DEC 06, PROFESSIONAL ENGINEER

COWI

SCVA DESIGNED BY:	2019/12/06 DATE
CHJS DRAWN BY:	2019/12/06 DATE
MWBM CHECKED BY:	2019/12/06 DATE

CITY OF KIRKLAND
TOTEM LAKE CONNECTION

SUPERSTRUCTURE FRAMING PLAN SHEET 1

SHEET: TLC-S-130
SCALE: AS SHOWN
FILENAME: A088367-S-130.dwg

File: D:\Projectwise\COWI\dt301252\A088367-S-130.dwg Save Date: Nov 26, 2019 1:21 PM Saved By: CHJS

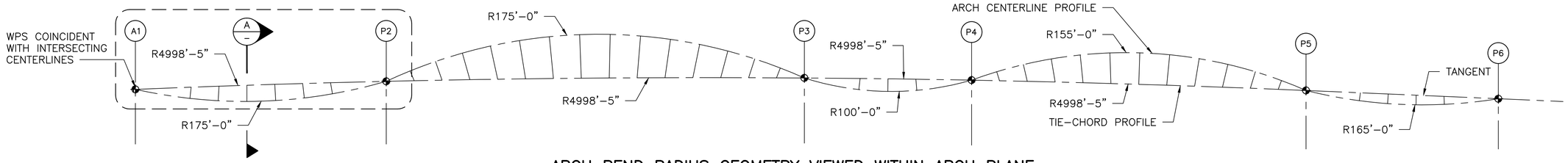

ARCH BEND RADIUS GEOMETRY VIEWED WITHIN ARCH PLANE

SCALE: 1" = 20'

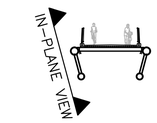

SECTION A

SCALE: 1" = 20'

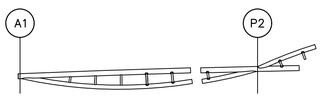

STEEL SUBASSEMBLY KEYPLAN

SCALE: NTS

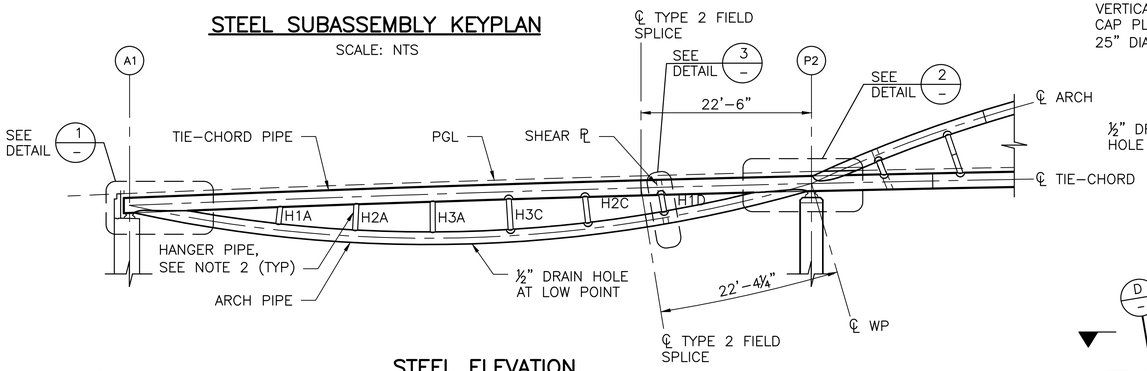

STEEL ELEVATION

SCALE: 1" = 10'

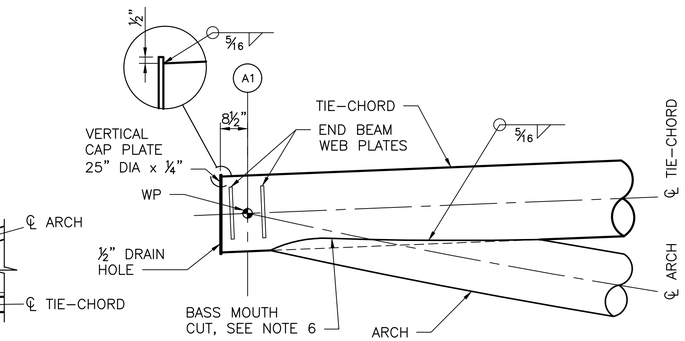

DETAIL 1

SCALE: ½" = 1'-0"
(A1 KNUCKLE)

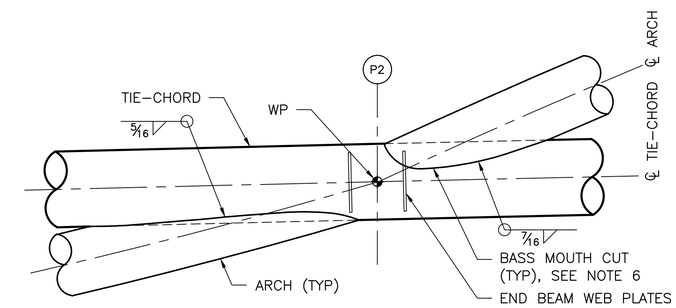

DETAIL 2

SCALE: ½" = 1'-0"
(P2 KNUCKLE)

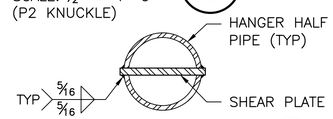

SECTION B

SCALE: 1½" = 1'-0"

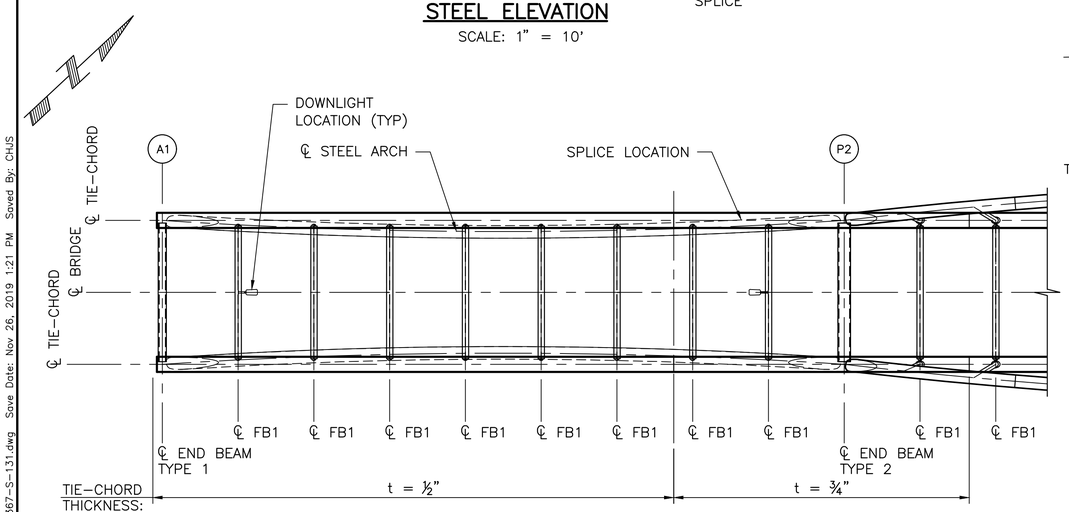

FRAMING PLAN

SCALE: 1" = 10'

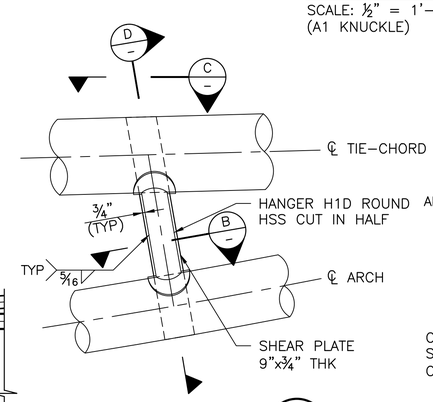

DETAIL 3

SCALE: ½" = 1'-0"

(SHEAR PLATE REQ'D AT TYPE D HANGERS ONLY)

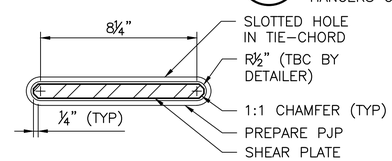

SECTION C

SCALE: 3" = 1'-0"

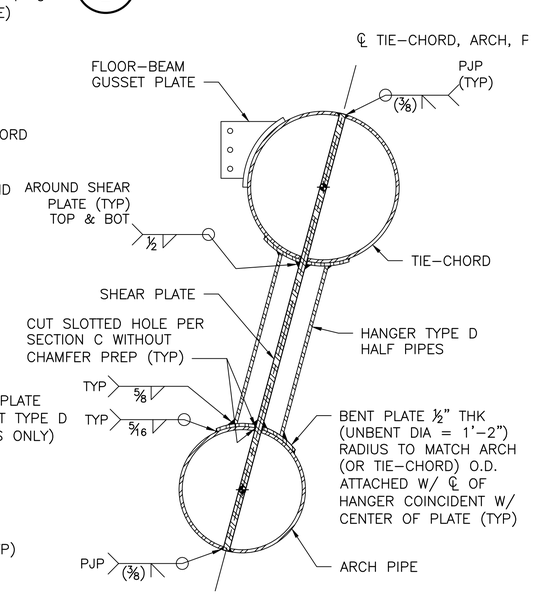

SECTION D

SCALE: 1" = 1'-0"

NOTES:

1. FOR GENERAL STRUCTURAL NOTES SEE DWG TLC-S-101 AND DWG TLC-S-130.
2. HANGERS ARE PERPENDICULAR TO ARCH CENTERLINE AND COINCIDENT WITH FLOOR-BEAM AND TIE-CHORD CENTERLINES.
3. FOR HANGER SIZE SEE TABLE TLC-S-130 TABLES 1 AND 2.
4. ARCH DIMENSIONS ARE DRAWN IN TRUE ELEVATION AT CENTERLINE OF ARCH PIPE AND VARY FROM ACTUAL IN-PLANE DIMENSIONS.
5. ARCHES ARE PLANAR AND ROTATED 15-DEGREES ABOUT THE AXIS DRAWN THROUGH THE WORKPOINTS AT EACH END OF THE RESPECTIVE SPAN.
6. KNUCKLES ARE FORMED THROUGH A DIRECT WELDED CONNECTION OF THE ARCH BASS MOUTH CUT TO THE TIE-CHORD, TRIMMED TO ACCOMMODATE END BEAM WHERE REQUIRED. ARCH SHALL BE WELDED TO END BEAM AS REQUIRED TO CREATE A CONTINUOUS WELD.
7. LOCATE ARCH PIPE SEAMS ALONG INNER RADIUS SUCH THAT IT FOLLOWS THE PLANE OF BENDING.
8. FOR HANGER TYPES A, B AND C DETAILS, SEE DWG TLC-S-132.

CITY OF KIRKLAND
DEPARTMENT OF PUBLIC WORKS
123 FIFTH AVENUE KIRKLAND, WA 98033
(425) 587-3800 www.kirklandwa.gov

NO.	DATE	BY	APPR.	REVISION
0	2019/12/06	CHJS	MWBM	ISSUE FOR BID

MATHEW D. BAUGHMAN, STATE OF WASHINGTON, STRUCTURAL ENGINEER, PROFESSIONAL ENGINEER
2019 DEC 06

COWI

SCVA DESIGNED BY:	2019/12/06 DATE
CHJS DRAWN BY:	2019/12/06 DATE
MWBM CHECKED BY:	2019/12/06 DATE

CITY OF KIRKLAND
TOTEM LAKE CONNECTION

SUPERSTRUCTURE FRAMING PLAN SHEET 2

SHEET: TLC-S-131
SCALE: AS SHOWN
FILENAME: A088367-S-131.dwg

File: D:\Projectwise\COWI\d0301252\A088367-S-131.dwg Save Date: Nov 26, 2019 1:21 PM Saved By: CHJS

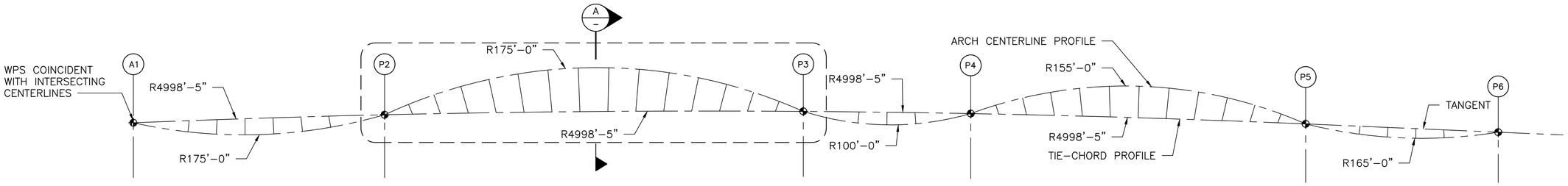

ARCH BEND RADIUS GEOMETRY VIEWED WITHIN ARCH PLANE

SCALE: 1" = 20'

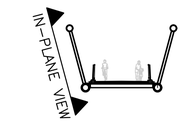

SECTION A

SCALE: 1" = 20'

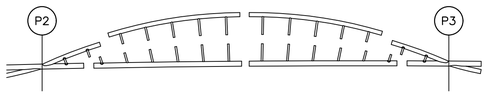

STEEL SUBASSEMBLY KEYPLAN

SCALE: NTS

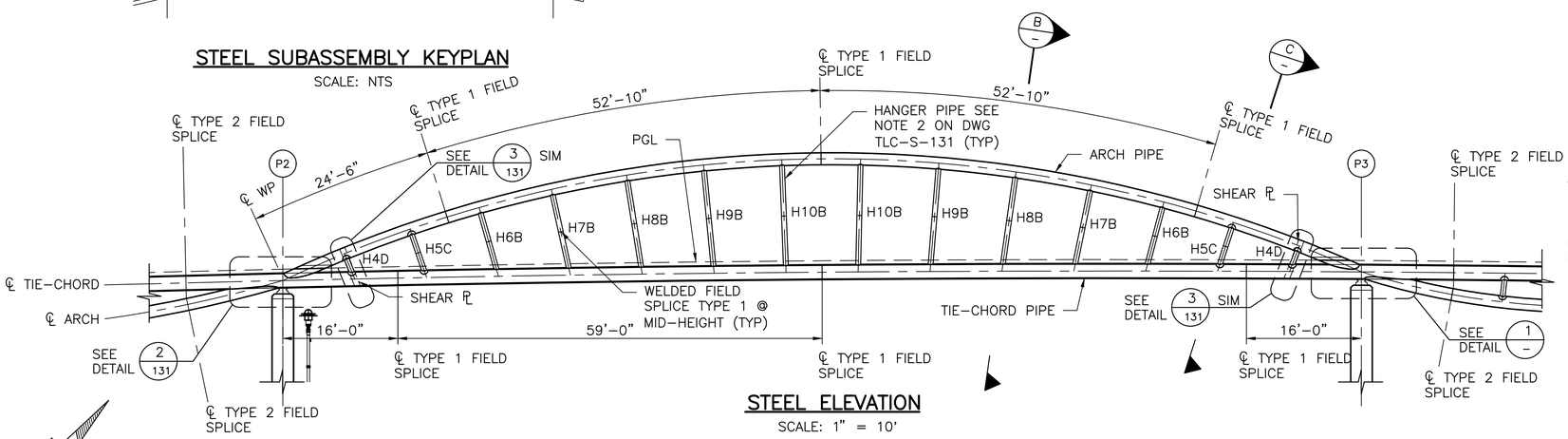

STEEL ELEVATION

SCALE: 1" = 10'

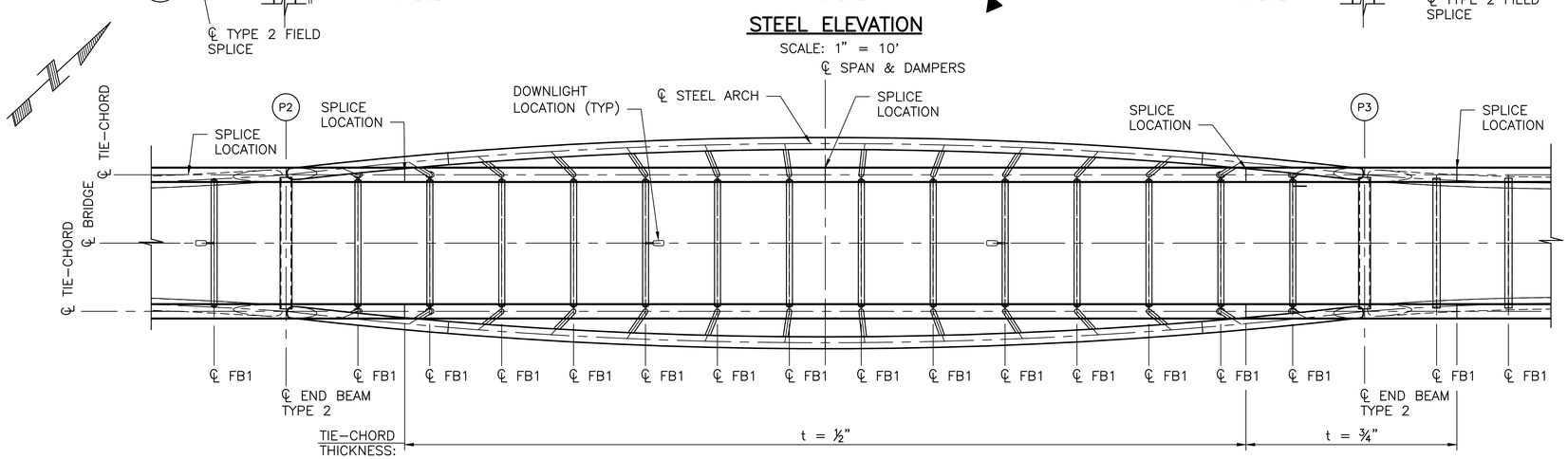

FRAMING PLAN

SCALE: 1" = 10'

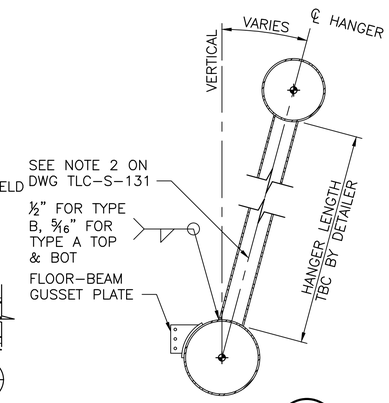

SECTION B

SCALE: ½" = 1'-0"
(GENERAL HANGER GEOMETRY TYPE A & B)

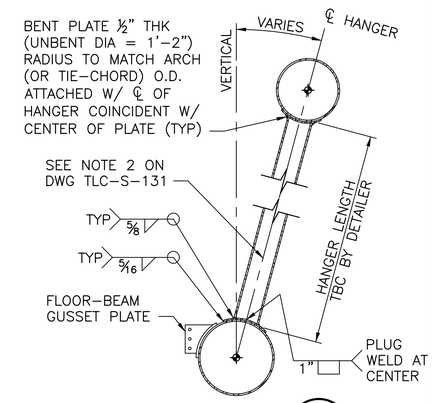

SECTION C

SCALE: ½" = 1'-0"
(GENERAL HANGER GEOMETRY TYPE C)

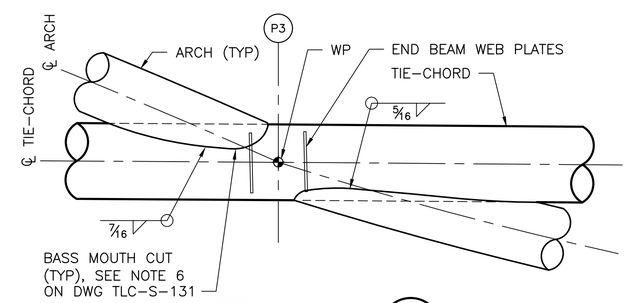

DETAIL 1

SCALE: ½" = 1'-0"
(P3 KNUCKLE)

NOTES:

1. FOR NOTES SEE DWG TLC-S-131.

File: D:\Projectwise\COWI\d0301252\A088367-S-131.dwg Save Date: Nov 26, 2019 1:21 PM Saved By: CHJS

CITY OF KIRKLAND
DEPARTMENT OF PUBLIC WORKS
123 FIFTH AVENUE KIRKLAND, WA 98033
(425) 587-3800 www.kirklandwa.gov

NO.	DATE	BY	APPR.	REVISION
0	2019/12/06	CHJS	MWBM	ISSUE FOR BID

MATTHEW D. BAUGHMAN — STATE OF WASHINGTON — 47214 — PROFESSIONAL ENGINEER — 2019 DEC 06

COWI

SCVA	2019/12/06
DESIGNED BY:	DATE
CHJS	2019/12/06
DRAWN BY:	DATE
MWBM	2019/12/06
CHECKED BY:	DATE

CITY OF KIRKLAND
TOTEM LAKE CONNECTION

SUPERSTRUCTURE
FRAMING PLAN SHEET 3

SHEET: TLC-S-132
SCALE: AS SHOWN
FILENAME: A088367-S-131.dwg

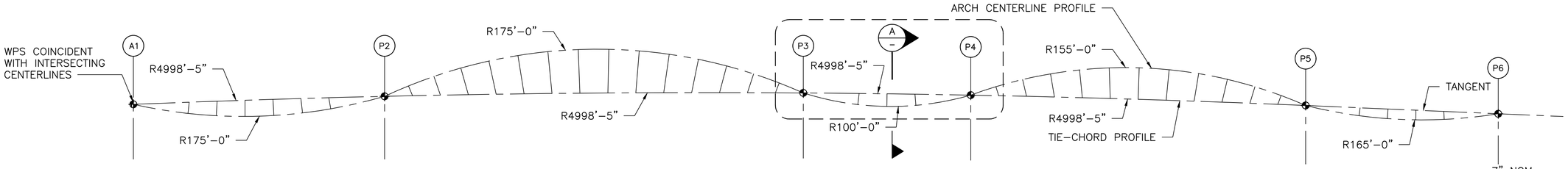

ARCH BEND RADIUS GEOMETRY VIEWED WITHIN ARCH PLANE

SCALE: 1" = 20'

STEEL SUBASSEMBLY KEYPLAN

SCALE: NTS

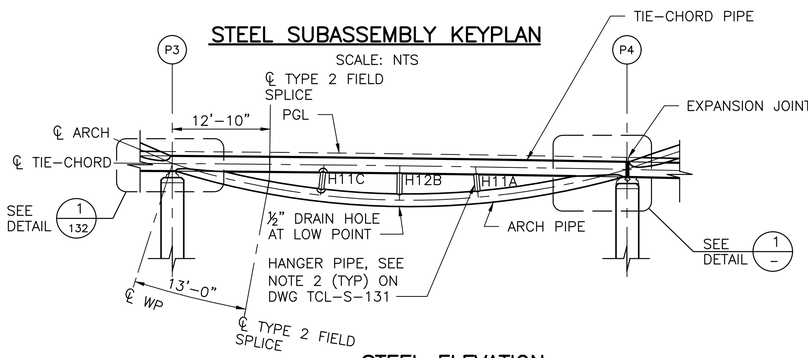

STEEL ELEVATION

SCALE: 1" = 10'

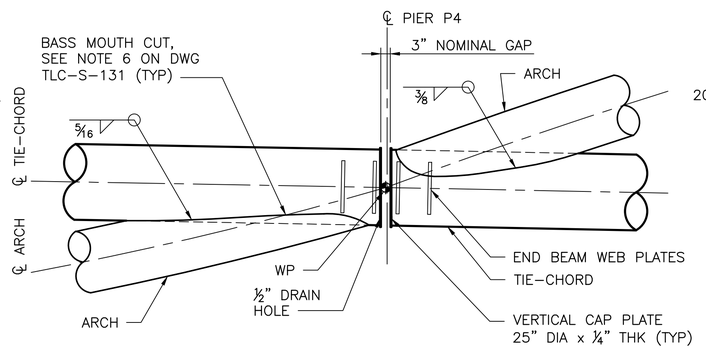

DETAIL 1

SCALE: ½" = 1'-0"
(P4 KNUCKLES)

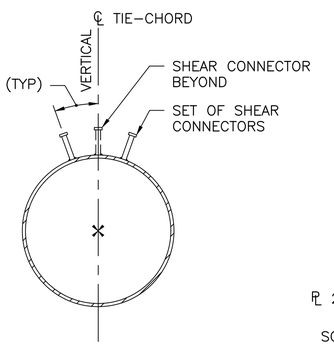

SECTION B

SCALE: 1" = 1'-0"

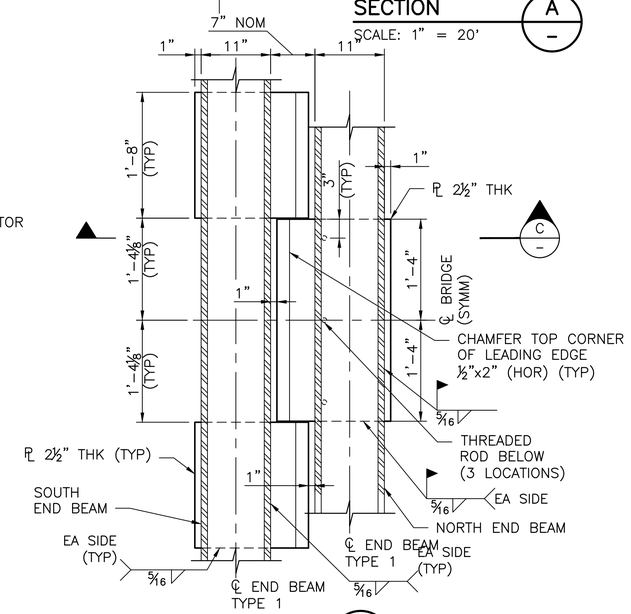

SECTION A

SCALE: 1" = 20'

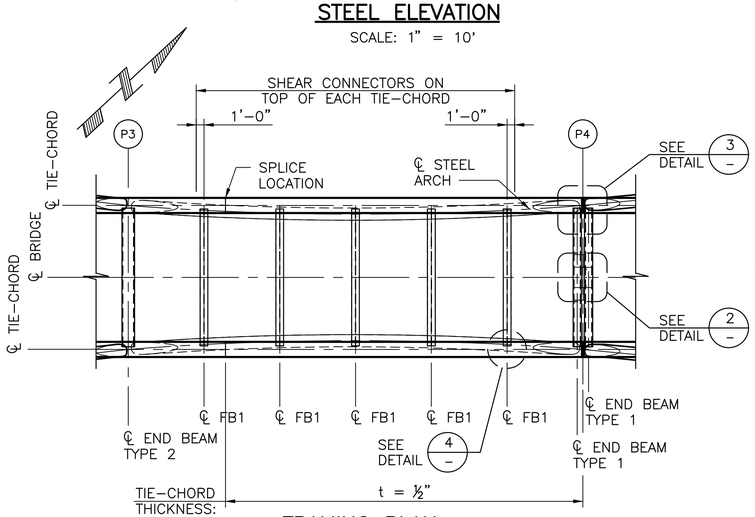

FRAMING PLAN

SCALE: 1" = 10'

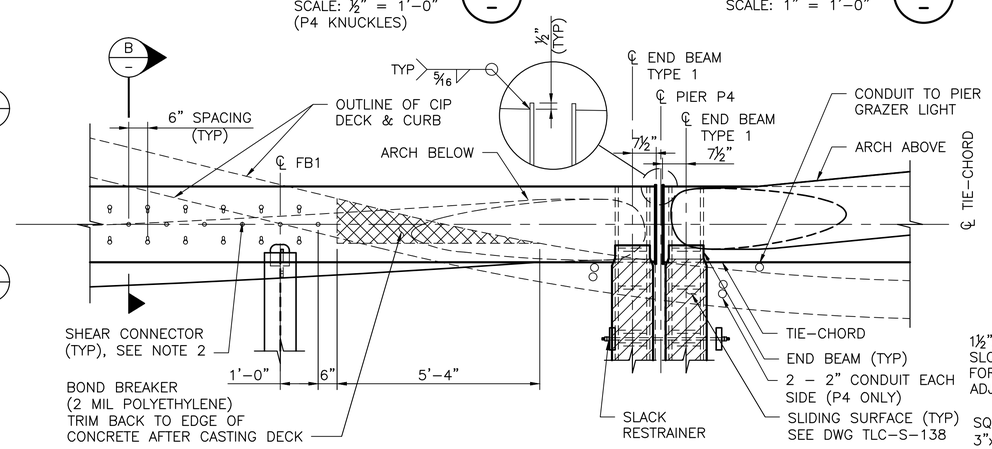

DETAIL 3

SCALE: ½" = 1'-0"
(PIER 4 SHOWN, PIER 3 SIMILAR EXCEPT JOINT AT PIER 4)

DETAIL 2

SCALE: 1" = 1'-0"
(SHEAR KEY DETAIL)

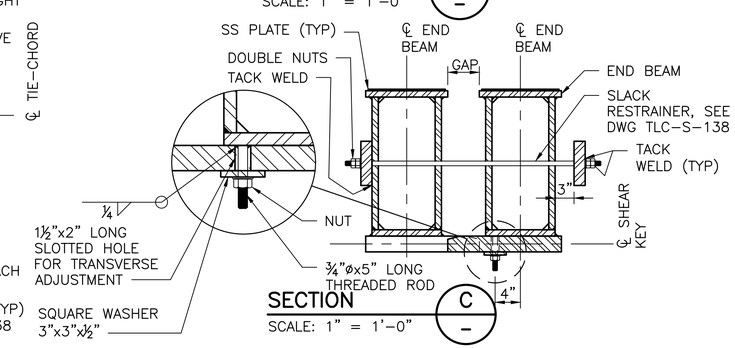

SECTION C

SCALE: 1" = 1'-0"

NOTES:

1. FOR NOTES SEE DWG TLC-S-131.
2. SHEAR CONNECTORS INSTALLED PERPENDICULAR TO TIE-CHORD PIPE ALONG SPAN 3 ONLY.
3. FOR HANGER TYPES A, B AND C DETAILS, SEE DWG TLC-S-132.

CITY OF KIRKLAND
DEPARTMENT OF PUBLIC WORKS
123 FIFTH AVENUE KIRKLAND, WA 98033
(425) 587-3800 www.kirklandwa.gov

NO.	DATE	BY	APPR.	REVISION
0	2019/12/06	CHJS	MWBM	ISSUE FOR BID

MATTHEW D. BALGIMAN — STATE OF WASHINGTON — PROFESSIONAL ENGINEER — 2019 DEC 06

COWI

SCVA	2019/12/06
DESIGNED BY:	DATE
CHJS	2019/12/06
DRAWN BY:	DATE
MWBM	2019/12/06
CHECKED BY:	DATE

CITY OF KIRKLAND
TOTEM LAKE CONNECTION

SUPERSTRUCTURE FRAMING PLAN SHEET 4

SHEET: TLC-S-133
SCALE: AS SHOWN
FILENAME: A088367-S-131.dwg

File: D:\Projectwise\COWI\dt301252\A088367-S-131.dwg Save Date: Nov 26, 2019 1:21 PM Saved By: CHJS

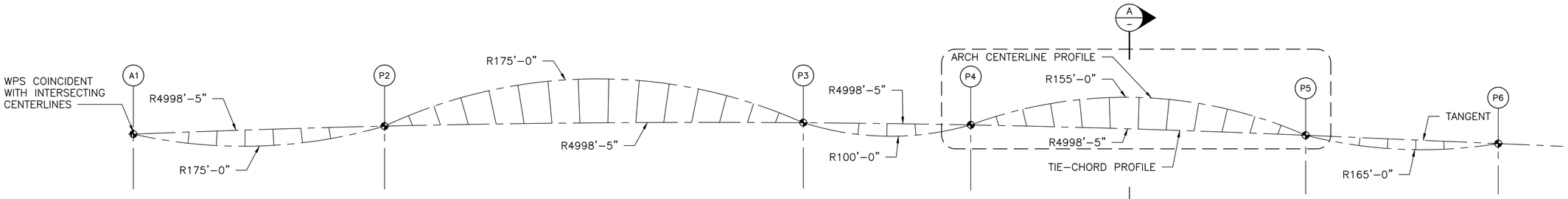

ARCH BEND RADIUS GEOMETRY VIEWED WITHIN ARCH PLANE

SCALE: 1" = 20'

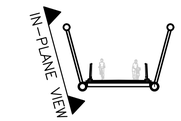

SECTION A/-

SCALE: 1" = 20'

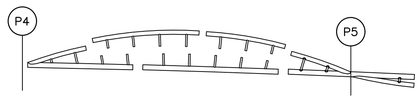

STEEL SUBASSEMBLY KEYPLAN

SCALE: NTS

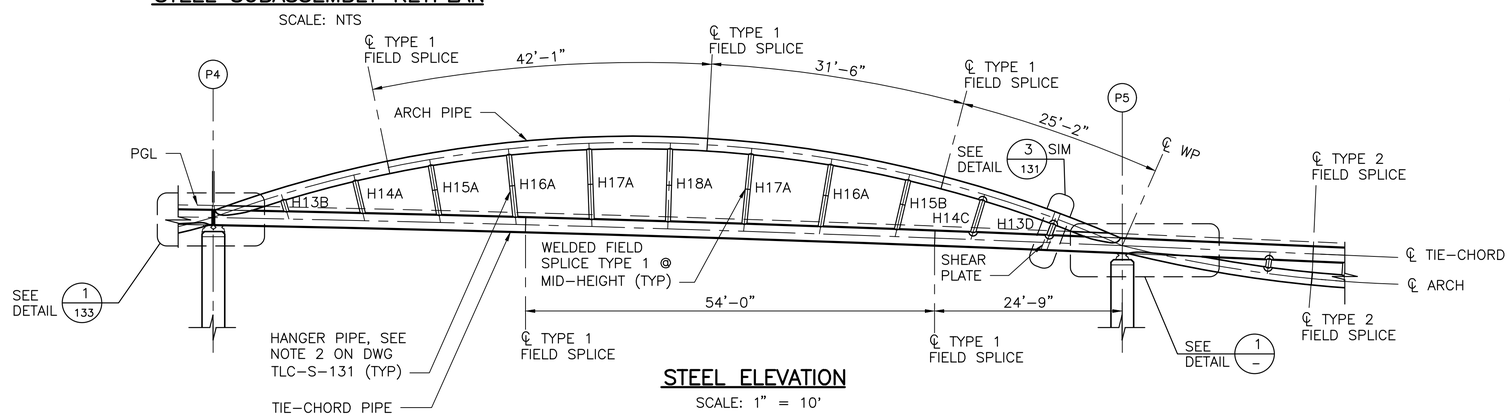

STEEL ELEVATION

SCALE: 1" = 10'

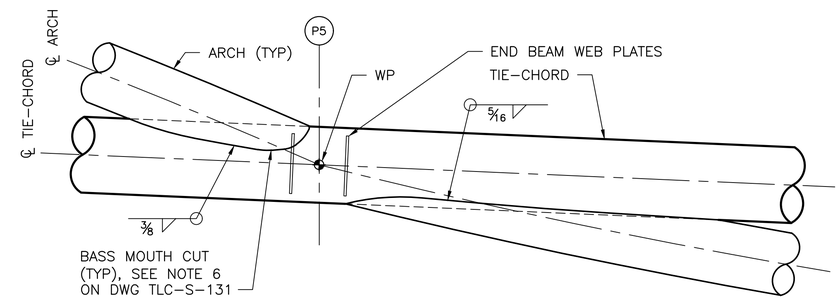

DETAIL 1/-

SCALE: ½" = 1'-0"
(P5 KNUCKLE)

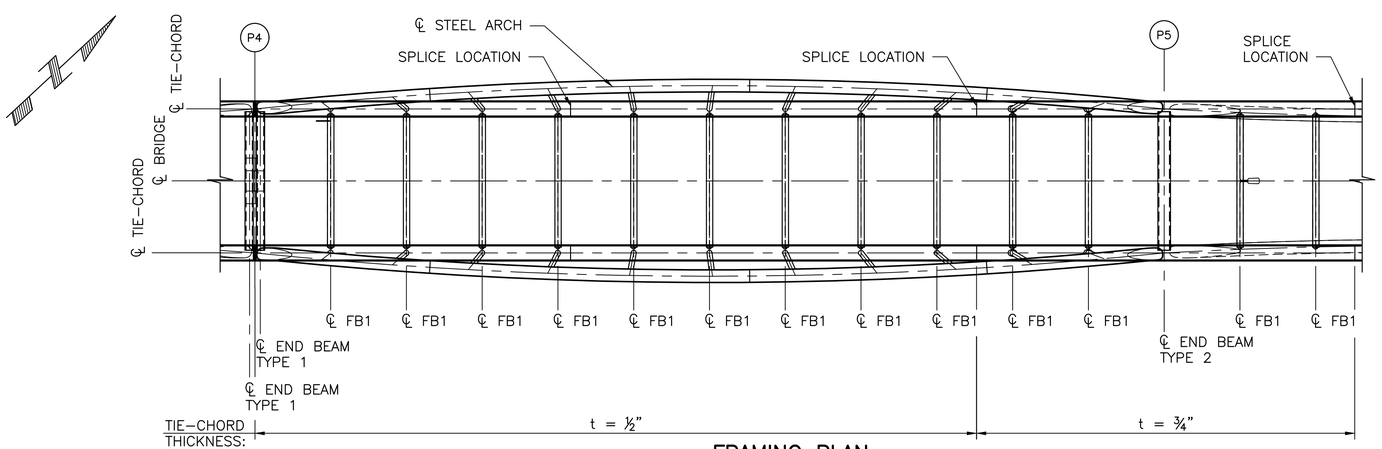

FRAMING PLAN

SCALE: 1" = 10'

NOTES:

1. FOR NOTES SEE DWG TLC-S-131.
2. TIE-CHORDS ARE STRAIGHT (UNBENT IN ELEVATION) FROM PIER P5 TO PIER P6.
3. FOR HANGER TYPES A, B AND C DETAILS SEE DWG TLC-S-132.

CITY OF KIRKLAND
DEPARTMENT OF PUBLIC WORKS
123 FIFTH AVENUE KIRKLAND, WA 98033
(425) 587-3800 www.kirklandwa.gov

NO.	DATE	BY	APPR.	REVISION
0	2019/12/06	CHJS	MWBM	ISSUE FOR BID

MATTHEW D. BAUGHMAN — STATE OF WASHINGTON — 2019 DEC 06 — PROFESSIONAL ENGINEER

COWI

SCVA	2019/12/06
DESIGNED BY:	DATE
CHJS	2019/12/06
DRAWN BY:	DATE
MWBM	2019/12/06
CHECKED BY:	DATE

CITY OF KIRKLAND
TOTEM LAKE CONNECTION

SUPERSTRUCTURE FRAMING PLAN SHEET 5

SHEET: TLC-S-134
SCALE: AS SHOWN
FILENAME: A088367-S-131.dwg

File: D:\Projectwise\COWI\dk301252\A088367-S-131.dwg Save Date: Nov 26, 2019 1:21 PM Saved By: CHJS

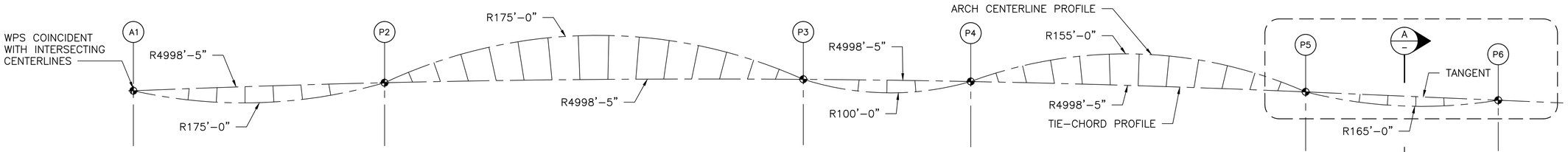

ARCH BEND RADIUS GEOMETRY VIEWED WITHIN ARCH PLANE

SCALE: 1" = 20'

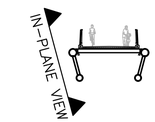

SECTION A/–

SCALE: 1" = 20'

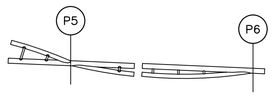

STEEL SUBASSEMBLY KEYPLAN

SCALE: NTS

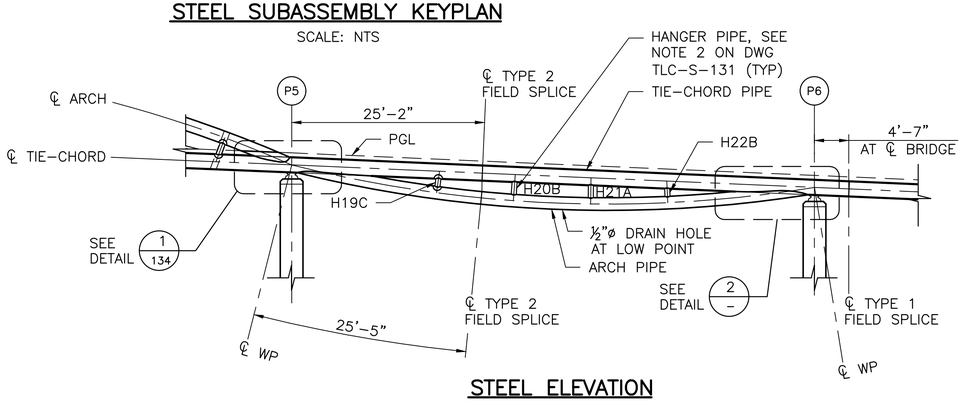

STEEL ELEVATION

SCALE: 1" = 10'

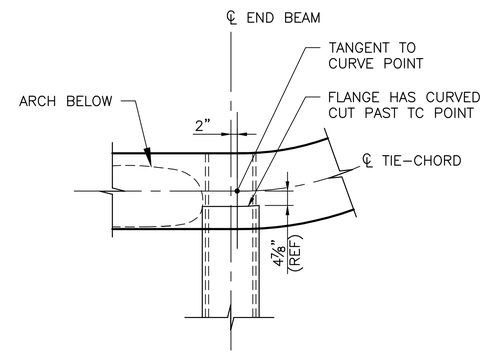

DETAIL 1/–

SCALE: NTS

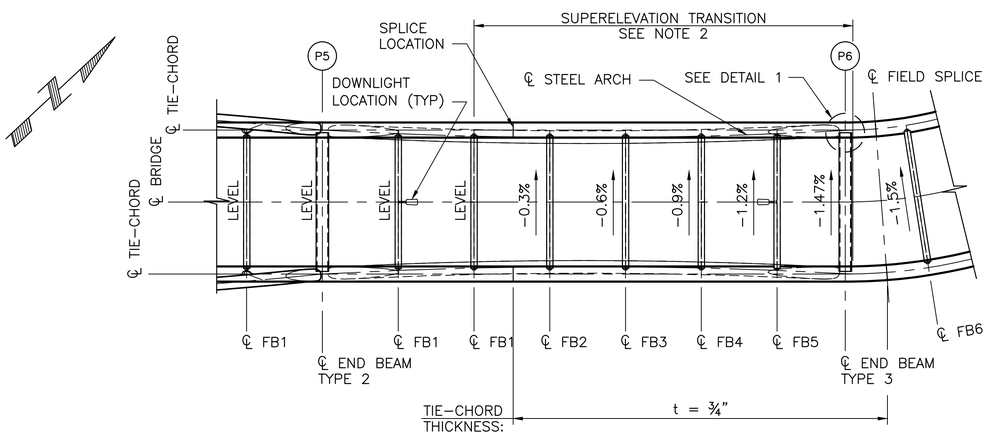

FRAMING PLAN

SCALE: 1" = 10'

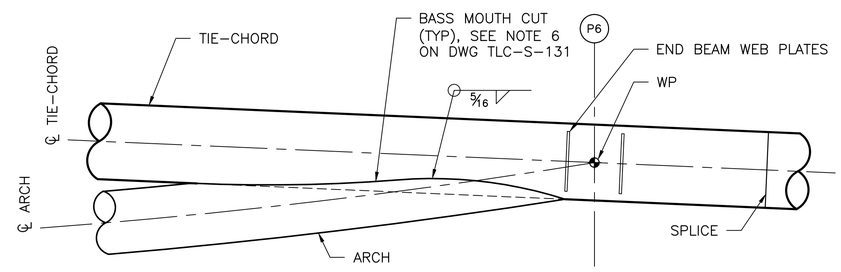

DETAIL 2/–

SCALE: ½" = 1'–0"
(P6 KNUCKLE)

NOTES:

1. FOR NOTES SEE DWG TLC–S–131.
2. SUPERELEVATION TRANSITION OF DECK OCCURS OVER SPAN 5 UTILIZING INCREMENTAL SLOPING OF THE FLOOR–BEAMS UNTIL THE FULL SUPERELEVATION IS ACHIEVED NEAR PIER P6.
3. TIE–CHORDS ARE STRAIGHT (UNBENT IN ELEVATION) FROM PIER P5 TO PIER P6.
4. FOR HANGER TYPES A, B AND C DETAILS SEE DWG TLC–S–132.

CITY OF KIRKLAND
DEPARTMENT OF PUBLIC WORKS
123 FIFTH AVENUE KIRKLAND, WA 98033
(425) 587-3800 www.kirklandwa.gov

NO.	DATE	BY	APPR.	REVISION
0	2019/12/06	CHJS	MWBM	ISSUE FOR BID

MATTHEW D. BAUGHMAN — STATE OF WASHINGTON — 2019 DEC 06 — PROFESSIONAL ENGINEER

COWI

SCVA	2019/12/06
DESIGNED BY:	DATE
CHJS	2019/12/06
DRAWN BY:	DATE
MWBM	2019/12/06
CHECKED BY:	DATE

CITY OF KIRKLAND
TOTEM LAKE CONNECTION

SUPERSTRUCTURE FRAMING PLAN SHEET 6

SHEET: TLC–S–135
SCALE: AS SHOWN
FILENAME: A088367–S–131.dwg

File: D:\Projectwise\COWI\a030125\A088367–S–131.dwg Save Date: Nov 26, 2019 1:21 PM Saved By: CHJS

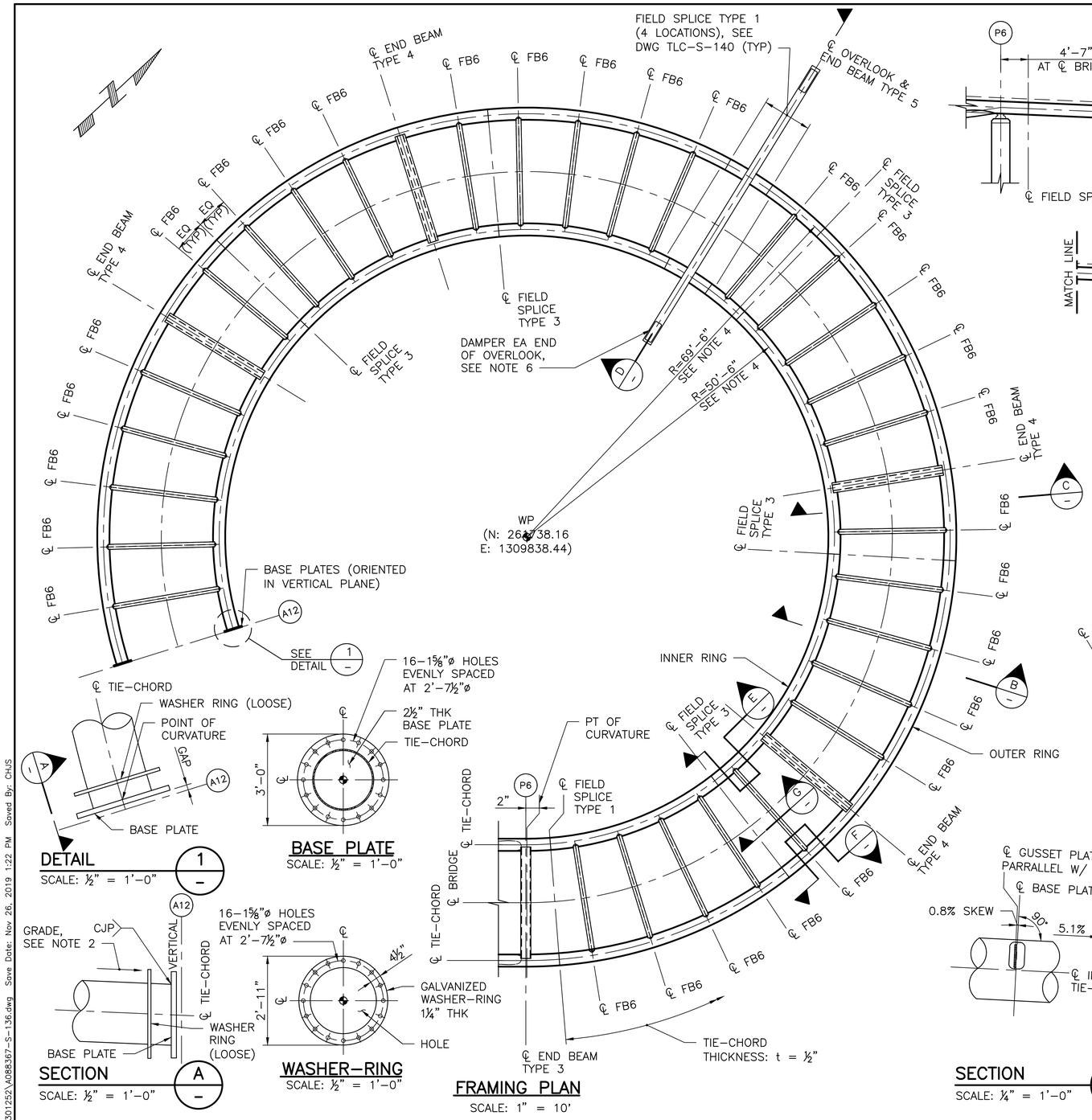

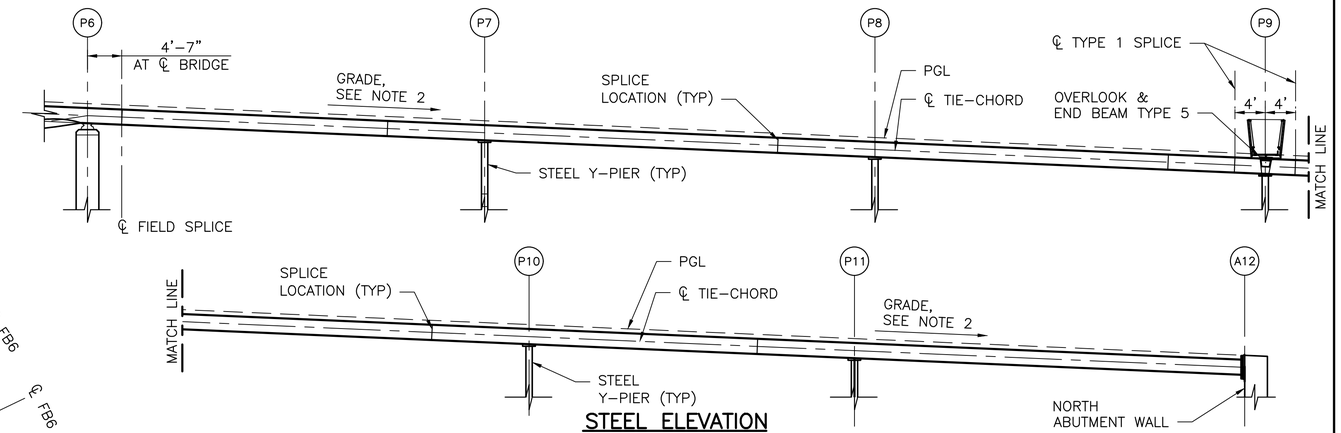

STEEL ELEVATION

SCALE: 1" = 10'

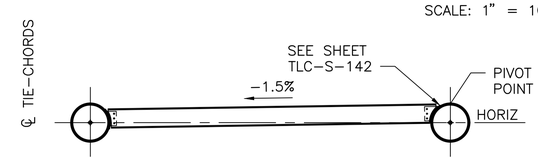

SECTION B

SCALE: ¼" = 1'-0"
(TYP ALL LOOP RAMP FLOOR-BEAMS)

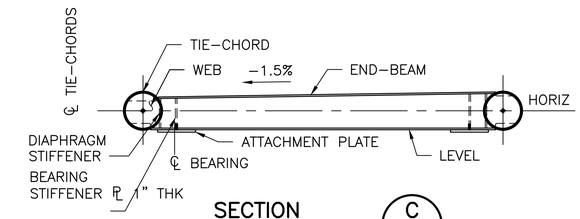

SECTION C

SCALE: ¼" = 1'-0"
(P7, P8, P10 & P11 END BEAMS)

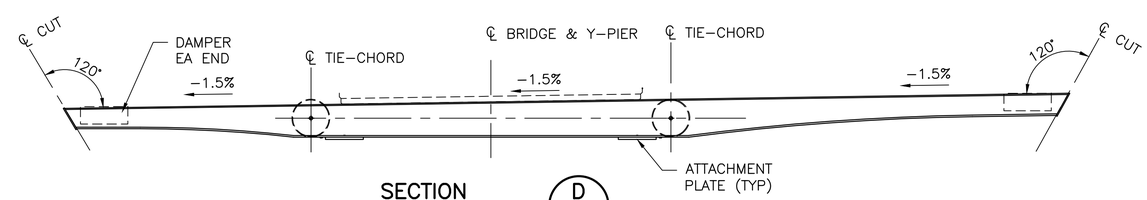

SECTION D

SCALE: ¼" = 1'-0"
(WALKWAY FRAMING NOT SHOWN FOR CLARITY)

DETAIL 1

SCALE: ½" = 1'-0"

BASE PLATE

SCALE: ½" = 1'-0"

SECTION A

SCALE: ½" = 1'-0"

WASHER-RING

SCALE: ½" = 1'-0"

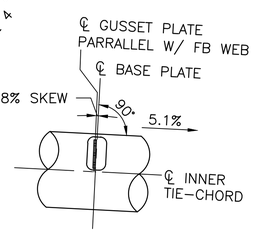

SECTION E

SCALE: ¼" = 1'-0"

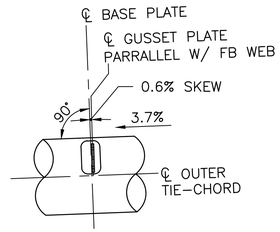

SECTION F

SCALE: ¼" = 1'-0"

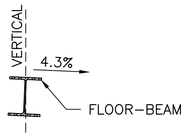

SECTION G

SCALE: ¼" = 1'-0"

NOTES:

1. FOR NOTES SEE DWG TLC-S-131.
2. TIE-CHORDS ARE PARALLEL IN PLAN AND FOLLOW A GRADE AT TIE-CHORD CENTERLINE OF 5.1% ALONG THE INNER RING AND 3.7% ALONG THE OUTER RING.
3. TIE-CHORD CENTERLINES FOR INNER AND OUTER RINGS ARE COINCIDENT WITH THE HORIZONTAL AXIS AT EACH RADIAL SECTION.
4. TIE-CHORD BEND RADII SHALL ACCOUNT FOR INNER AND OUTER GRADE.
5. FIELD SPLICES OCCUR IN INNER AND OUTER RINGS AT LOCATIONS INDICATED.
6. DAMPER AND ASSOCIATED FRAMING/CONNECTIONS SHALL BE DESIGNED AND SUPPLIED BY DAMPER MANUFACTURER. FLOOR-BEAM CAPACITY SHALL BE CONFIRMED WITH CALCULATIONS SUBMITTED TO ENGINEER FOR REVIEW AND ACCEPTANCE.

CITY OF KIRKLAND
DEPARTMENT OF PUBLIC WORKS
123 FIFTH AVENUE KIRKLAND, WA 98033
(425) 587-3800 www.kirklandwa.gov

NO.	DATE	BY	APPR.	REVISION
0	2019/12/06	CHJS	MWBM	ISSUE FOR BID

MATTHEW D. BAUGHMAN — STATE OF WASHINGTON — 2019 DEC 06 — PROFESSIONAL ENGINEER

COWI

SCVA — DESIGNED BY:	2019/12/06 DATE
CHJS — DRAWN BY:	2019/12/06 DATE
MWBM — CHECKED BY:	2019/12/06 DATE

CITY OF KIRKLAND
TOTEM LAKE CONNECTION

SUPERSTRUCTURE FRAMING PLAN SHEET 7

SHEET: TLC-S-136
SCALE: AS SHOWN
FILENAME: A088367-S-136.dwg

File: D:\Projectwise\COWI\dd301252\A088367-S-136.dwg Save Date: Nov 26, 2019 1:22 PM Saved By: CHJS

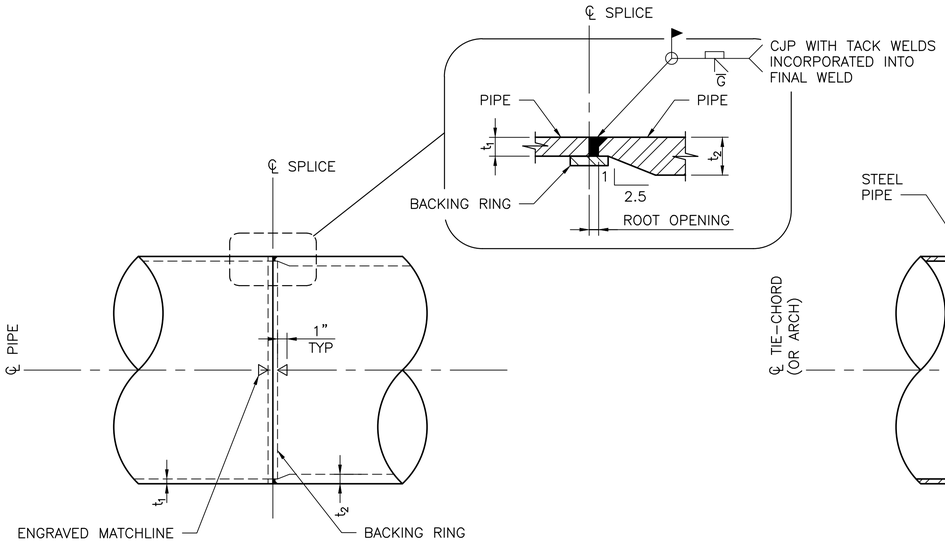

TIE–CHORD, ARCH & HANGER TYPE 1 SPLICE WELDED DETAIL (1/–)

SCALE: 1½" = 1'–0"
(VIEW IN PLAN)

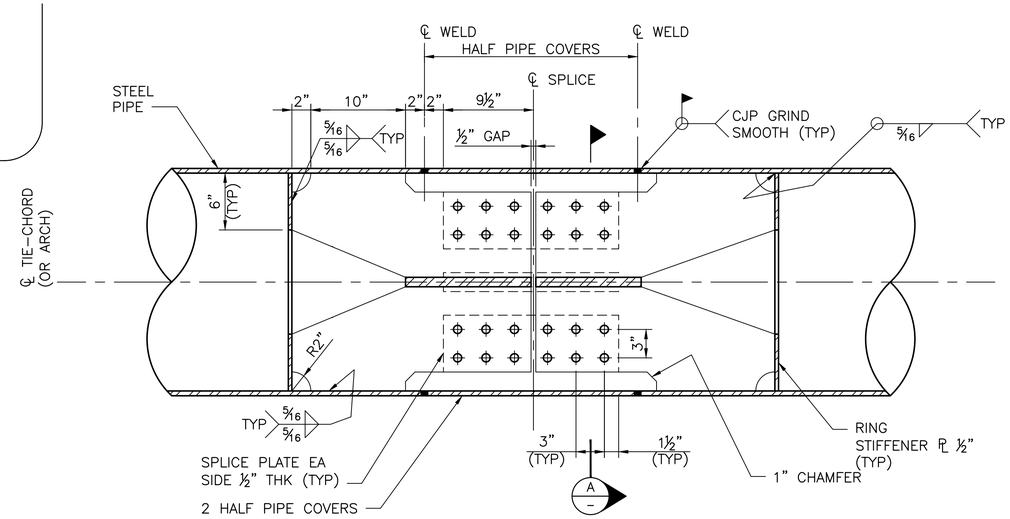

TIE–CHORD & ARCH TYPE 2 SPLICE BOLTED DETAIL (2/–)

SCALE: 1½" = 1'–0"
(VIEW DOWN ON PLANE,
SECTION THRU MID–HEIGHT OF PIPE)

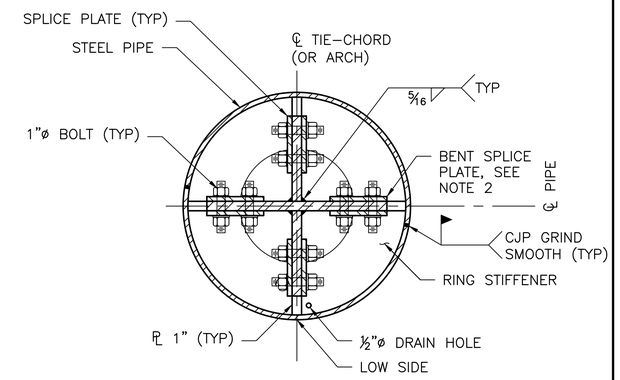

SECTION (A/–)

SCALE: 1½" = 1'–0"

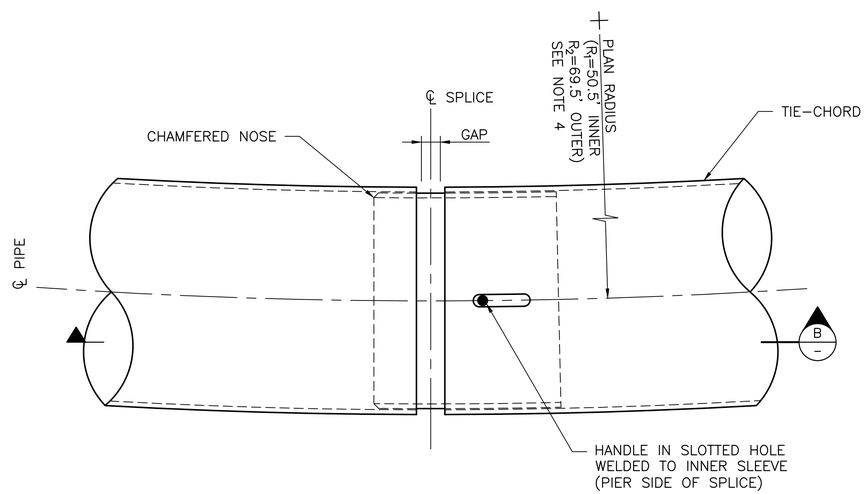

TIE–CHORD TYPE 3 SPLICE TELESCOPING DETAIL (3/–)

SCALE: 1½" = 1'–0"
(AT TIE–CHORD CENTERLINE
REFLECTED CEILING)

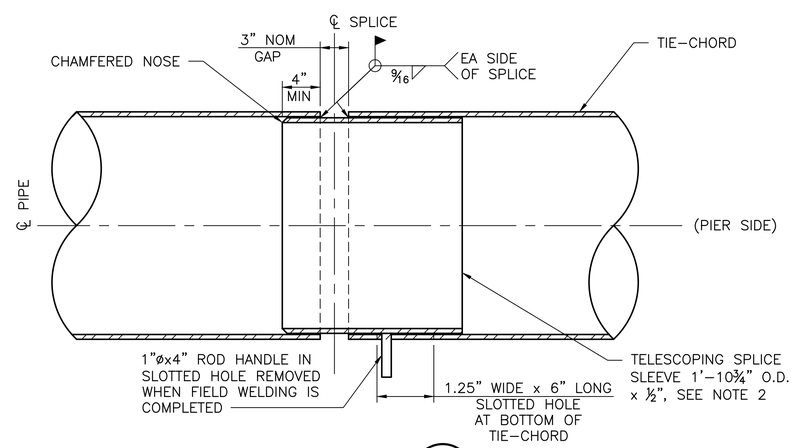

SECTION (B/–)

SCALE: 1½" = 1'–0"

NOTES:

1. FOR GENERAL STRUCTURAL NOTES SEE DWG TLC–S–101.
2. STEEL DETAILER SHALL ACCOUNT FOR CURVATURE OF MEMBERS IN FIELD SPLICE ASSEMBLIES, AND VERIFY DIAMETER OF TELESCOPING PIECE WORKS WITH ACTUAL I.D. OF THE TIE–CHORD PIPES.
3. TYPE 2 FIELD SPLICE REQUIRES SHORING APPROVED BY ENGINEER TO ENSURE DEFLECTIONS AND STRESS ARE CONTROLLED.
4. TIE–CHORD BEND RADII SHALL ACCOUNT FOR INNER AND OUTER GRADE.
5. ALL SPLICES ARE INTENDED TO BE PERPENDICULAR TO PIPE CENTERLINE.

CITY OF KIRKLAND
DEPARTMENT OF PUBLIC WORKS
123 FIFTH AVENUE KIRKLAND, WA 98033
(425) 587-3800 www.kirklandwa.gov

NO.	DATE	BY	APPR.	REVISION
0	2019/12/06	CHJS	MWBM	ISSUE FOR BID

MATTHEW D. BAUGHMAN — STATE OF WASHINGTON — 48202 — REGISTERED PROFESSIONAL ENGINEER — 2019 DEC 06

COWI

SCVA — DESIGNED BY:	2019/12/06 DATE
CHJS — DRAWN BY:	2019/12/06 DATE
MWBM — CHECKED BY:	2019/12/06 DATE

CITY OF KIRKLAND
TOTEM LAKE CONNECTION

SUPERSTRUCTURE HANGER, ARCH, AND TIE–CHORD SPLICE DETAILS

SHEET: TLC–S–137
SCALE: AS SHOWN
FILENAME: A088367–S–137.dwg

File: D:\Projectwise\COWI\dt301252\A088367-S-137.dwg Save Date: Nov 26, 2019 1:22 PM Saved By: CHJS

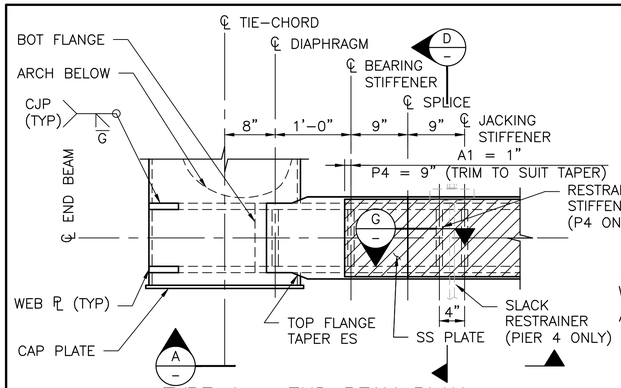

TYPE 1 – END BEAM PLAN

SCALE: 1" = 1'-0"
(SYMMETRICAL ABOUT CENTERLINE OF BRIDGE.
DETAIL AT A1 SHOWN, P4 SIMILAR)

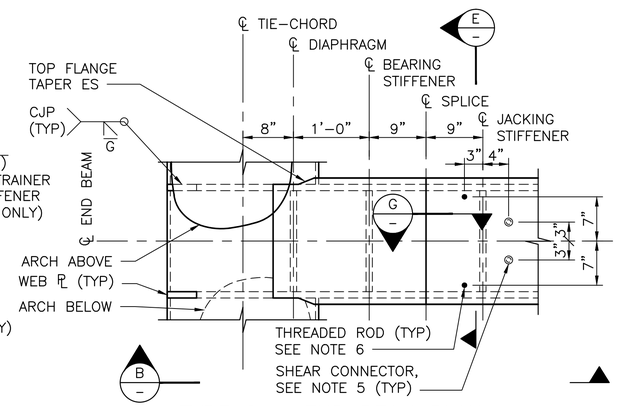

TYPE 2 – END BEAM PLAN

SCALE: 1" = 1'-0"
(SYMMETRICAL ABOUT CENTERLINE OF BRIDGE.
DETAIL AT P2, P3 & P5)

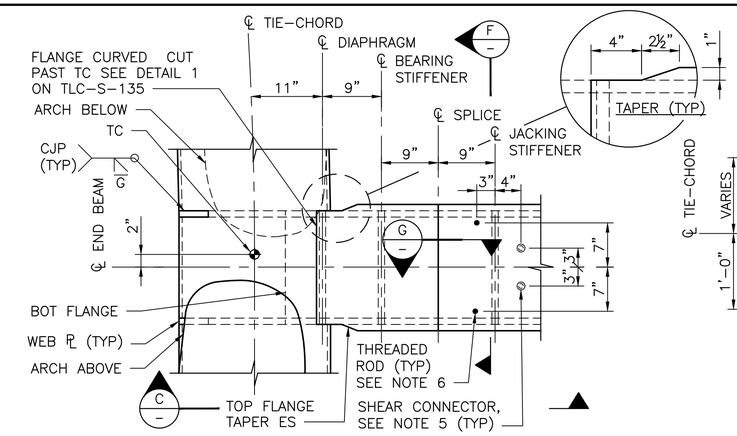

TYPE 3 – END BEAM PLAN

SCALE: 1" = 1'-0"
(DETAIL AT P6)

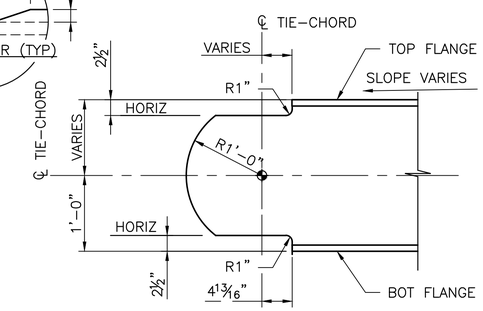

WEB PLATE DETAIL 1

SCALE: 1" = 1'-0"

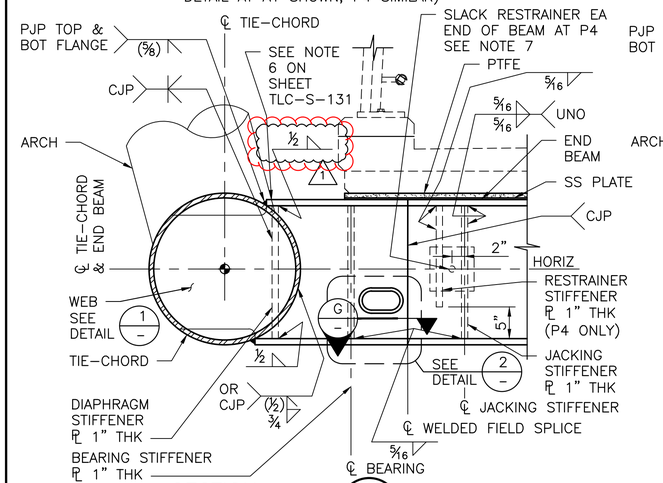

SECTION A

SCALE: 1" = 1'-0"
(SYMMETRICAL ABOUT CENTERLINE OF BRIDGE)

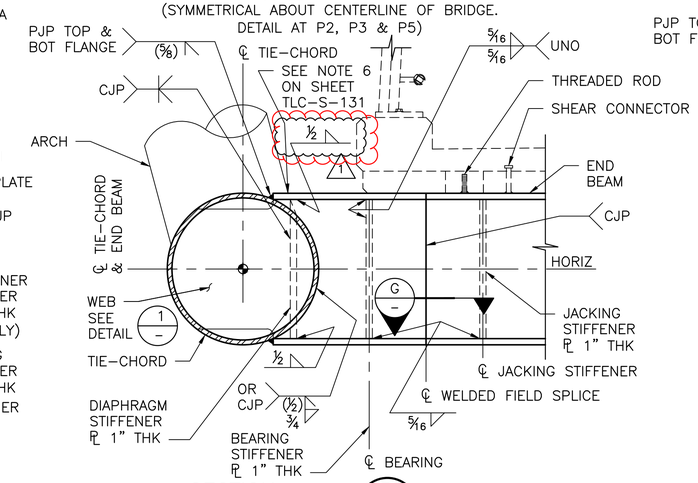

SECTION B

SCALE: 1" = 1'-0"
(SYMMETRICAL ABOUT CENTERLINE OF BRIDGE)

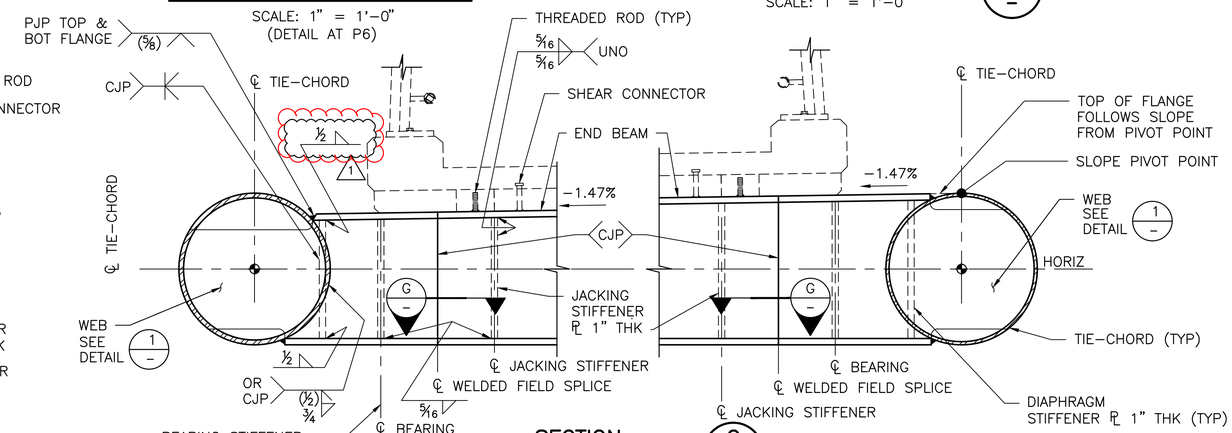

SECTION C

SCALE: 1" = 1'-0"

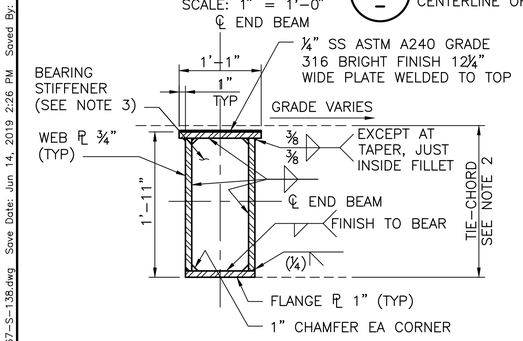

SECTION D

SCALE: 1" = 1'-0"

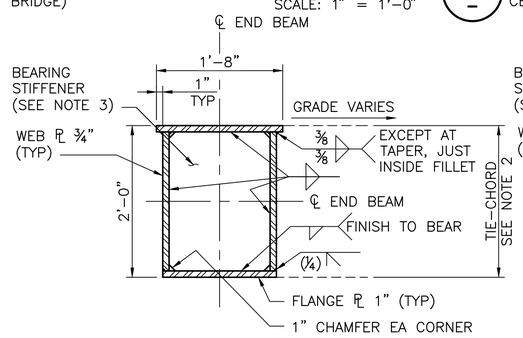

SECTION E

SCALE: 1" = 1'-0"

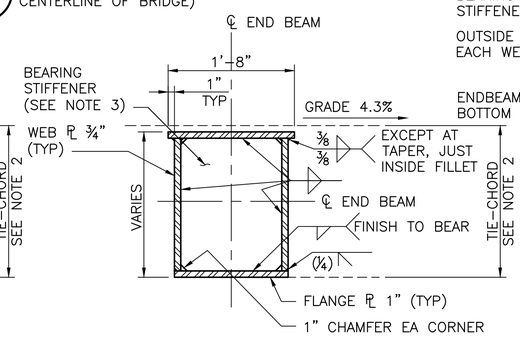

SECTION F

SCALE: 1" = 1'-0"

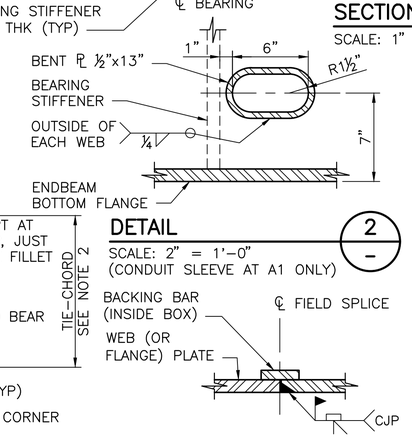

DETAIL 2

SCALE: 2" = 1'-0"
(CONDUIT SLEEVE AT A1 ONLY)

SECTION G

SCALE: 2" = 1'-0"

NOTES:

1. FOR GENERAL STRUCTURAL NOTES SEE DWG TLC-S-101.
2. END BEAMS ARE SQUARE WITH TIE-CHORD PIPE. TOP FLANGE FOLLOWS GRADE.
3. BEARING, JACKING AND DIAPHRAGM STIFFENERS USE COMMON DETAILING, EXCEPT WELD SIZES.
4. END BEAMS SHALL USE HIGH PERFORMANCE STEEL (HPS).
5. SHEAR CONNECTORS SHALL BE PLACED IN PAIRS (25 COUNT) AT 6" SPACING O.C. WITH MIDDLE PAIR COINCIDENT WITH BRIDGE CENTERLINE.
6. THREADED ROD ¾"ø x3" WELDED TO BEAM 6'-7" FROM BRIDGE CENTERLINE FOR SECURING PC PANEL.
7. SLACK RESTRAINERS CONNECT SPANS 3 AND 4 AT PIER P4 FOR CONTROL OF SEISMIC DISPLACEMENTS AND SHALL BE COMPRISED OF GALVANIZED 1⅜"ø PT BAR GRADE 150 WITHIN 2¼" DIA HOLES IN END BEAM WEBS C/W MANUFACTURER NUTS AND SQUARE PLATES (1¾"x7"x7" MIN.) SET WITH 3" OF ALLOWED DISPLACEMENT BEFORE ENGAGEMENT. BARS SHALL BE CENTERED IN OUTER WEB BEAM HOLES WITH PLASTIC CENTRALIZERS.

CITY OF KIRKLAND
DEPARTMENT OF PUBLIC WORKS
123 FIFTH AVENUE KIRKLAND, WA 98033
(425) 587-3800 www.kirklandwa.gov

NO.	DATE	BY	APPR.	REVISION
1	2020/02/11	CHJS	MWBM	AMENDMENT 1
0	2019/12/06	CHJS	MWBM	ISSUE FOR BID

MATTHEW D. BALGEMAN
STATE OF WASHINGTON
PROFESSIONAL ENGINEER
2020 FEB 13

COWI

APPROVED BY:

DATE:

SCVA	2019/12/06	DESIGNED BY: DATE
CHJS	2019/12/06	DRAWN BY: DATE
MWBM	2019/12/06	CHECKED BY: DATE

CITY OF KIRKLAND
TOTEM LAKE CONNECTION

SUPERSTRUCTURE
END BEAM DETAILS – SHEET 1

SHEET: TLC-S-138
SCALE: AS SHOWN
FILENAME: A088367-S-138.dwg

File: D:\projectwise\cowi\d0301252\A088367-S-138.dwg Save Date: Jun 14, 2019 2:26 PM Saved By: CHJS

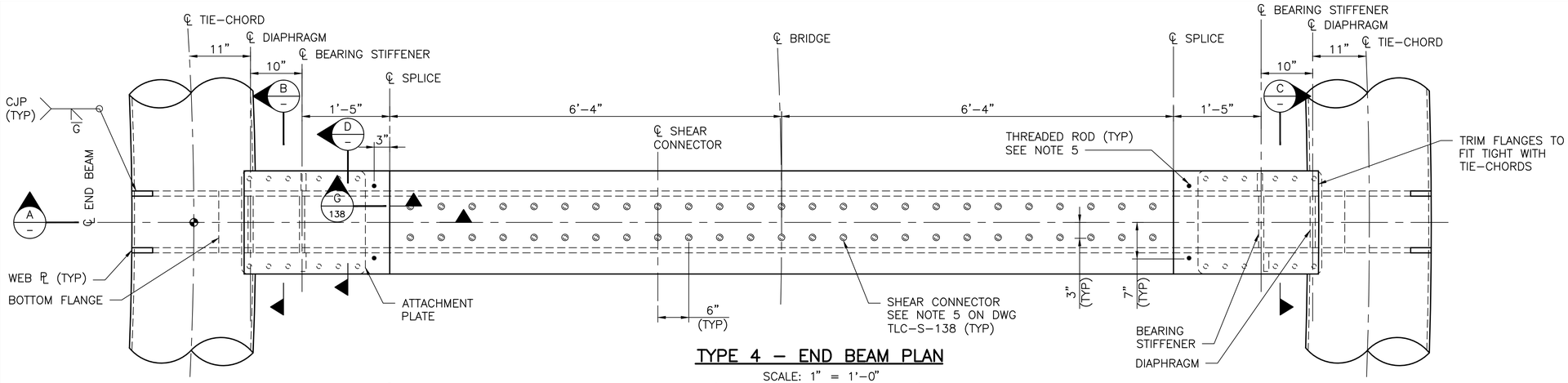

TYPE 4 – END BEAM PLAN

SCALE: 1" = 1'-0"
(DETAIL AT P7, P8, P10 AND P11)

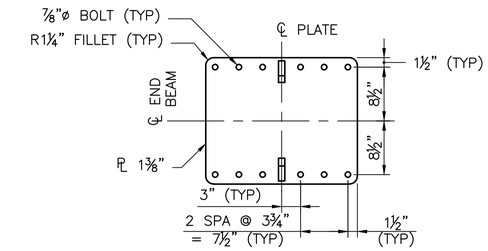

ATTACHMENT PLATE PLAN

SCALE: 1" = 1'-0"

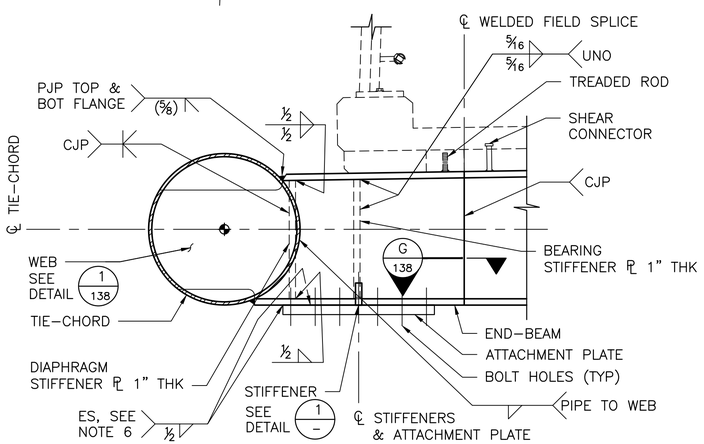

SECTION A

SCALE: 1" = 1'-0"

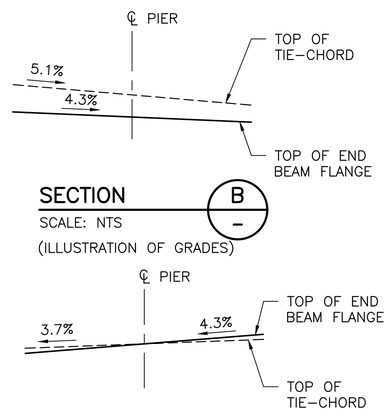

SECTION B

SCALE: NTS
(ILLUSTRATION OF GRADES)

SECTION C

SCALE: NTS
(ILLUSTRATION OF GRADES)

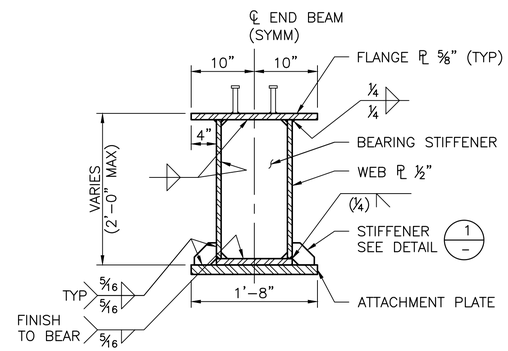

SECTION D

SCALE: 1" = 1'-0"

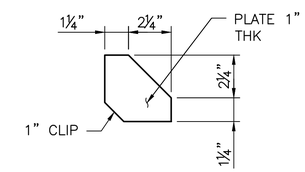

DETAIL 1

SCALE: 3" = 1'-0"

NOTES:

1. FOR GENERAL STRUCTURAL NOTES SEE DWG TLC-S-101.
2. END BEAM END SECTIONS ARE SLIGHTLY SKEWED WITH TIE-CHORD PIPES DUE TO DIFFERING LONGITUDINAL GRADE OF INNER AND OUTER RINGS.
3. BEARING AND DIAPHRAGM STIFFENERS USE COMMON DETAILING, EXCEPT WELD SIZES.
4. END BEAMS SHALL USE HIGH PERFORMANCE STEEL (HPS).
5. THREADED ROD ¾"ø×3" WELDED TO BEAM 6'-7" FROM BRIDGE CENTERLINE FOR SECURING PC PANEL.
6. STOP ATTACHMENT PLATE WELDS ½" FROM EDGES OF SHORTER PLATE.

CITY OF KIRKLAND
DEPARTMENT OF PUBLIC WORKS
123 FIFTH AVENUE KIRKLAND, WA 98033
(425) 587-3800 www.kirklandwa.gov

NO.	DATE	BY	APPR.	REVISION
0	2019/12/06	CHJS	MWBM	ISSUE FOR BID

MATTHEW D. BAUGHMAN — STATE OF WASHINGTON — PROFESSIONAL ENGINEER — 2019 DEC 06

COWI

SCVA	2019/12/06
DESIGNED BY:	DATE
CHJS	2019/12/06
DRAWN BY:	DATE
MWBM	2019/12/06
CHECKED BY:	DATE

CITY OF KIRKLAND
TOTEM LAKE CONNECTION

SUPERSTRUCTURE
END BEAM DETAILS – SHEET 2

SHEET: TLC-S-139
SCALE: AS SHOWN
FILENAME: A088367-S-139.dwg

File: D:\Projectwise\COWI\d0301252\A088367-S-139.dwg Save Date: Nov 26, 2019 1:22 PM Saved By: CHJS

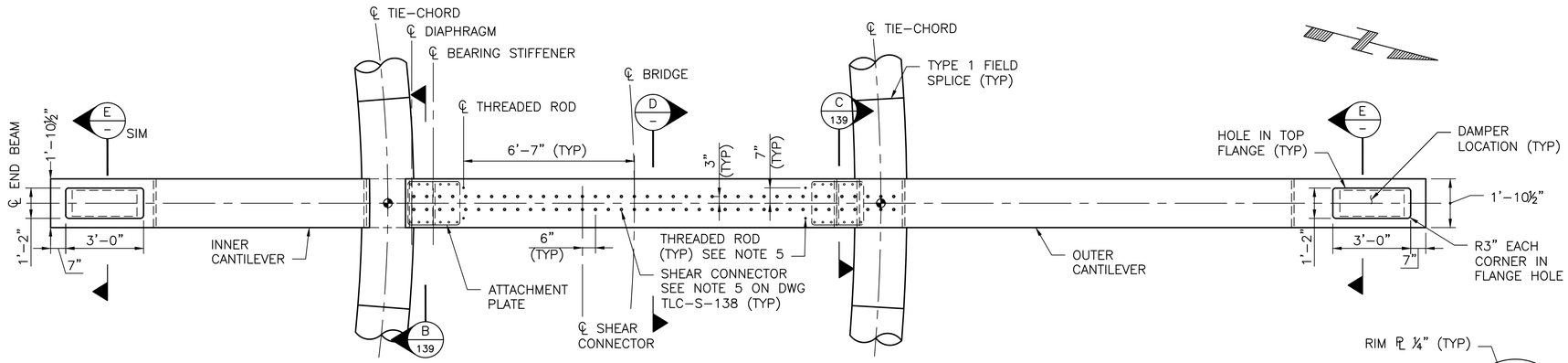

TYPE 5 – END BEAM PLAN

SCALE: ⅜" = 1'-0"

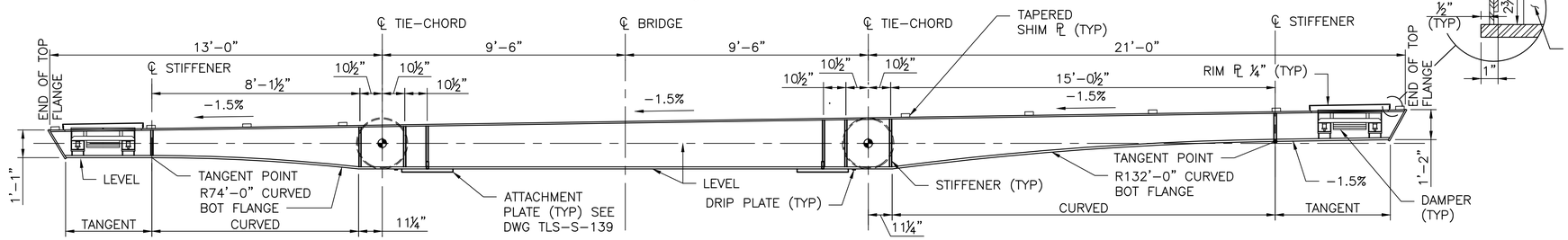

TYPE 5 – END BEAM OVERLOOK ELEVATION AT CENTERLINE

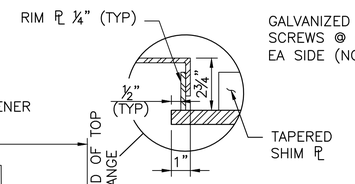

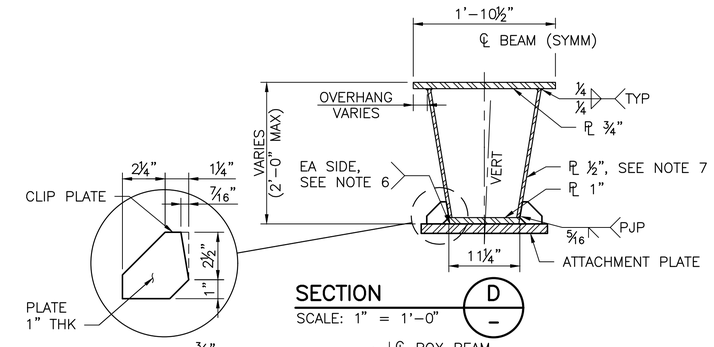

SECTION D

SCALE: 1" = 1'-0"

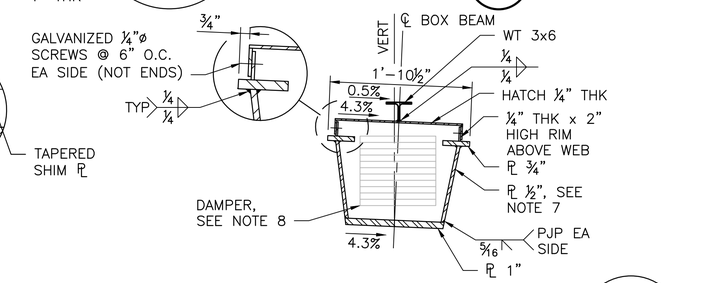

SECTION E

SCALE: 1" = 1'-0"

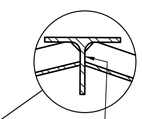

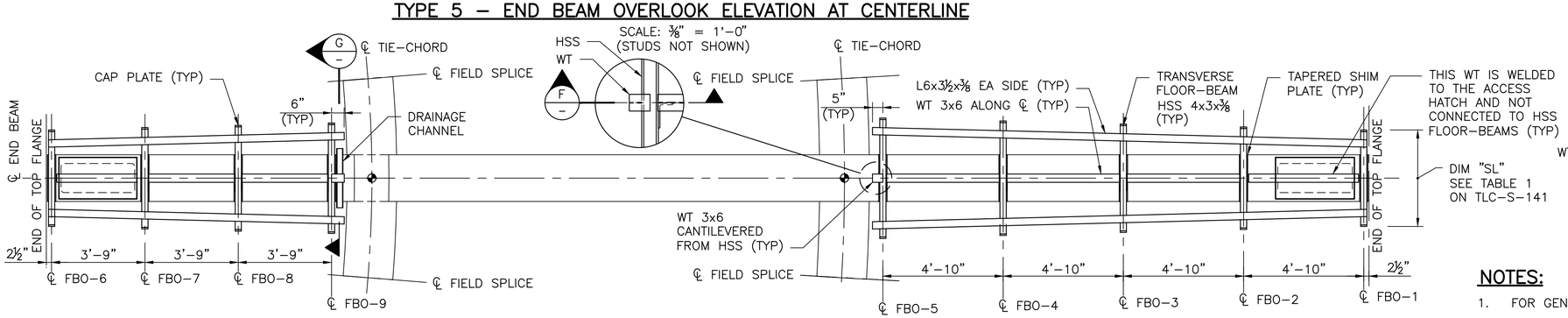

TYPE 5 – END BEAM OVERLOOK FRAMING

SCALE: ⅜" = 1'-0"
(RAILING POSTS & STUDS NOT SHOWN)

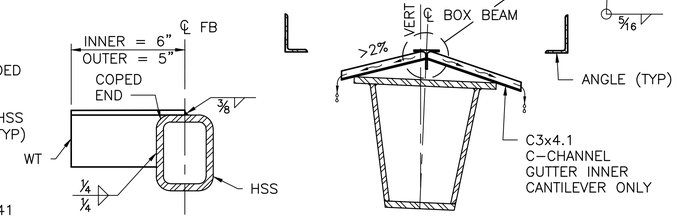

SECTION F

SCALE: 3" = 1'-0"

SECTION G

SCALE: 1½" = 1'-0"

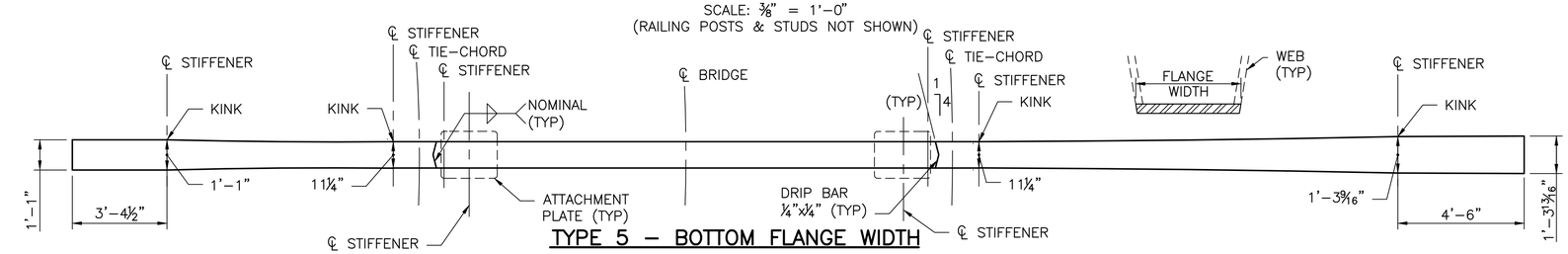

TYPE 5 – BOTTOM FLANGE WIDTH

SCALE: ⅜" = 1'-0"

NOTES:

1. FOR GENERAL STRUCTURAL NOTES SEE DWG TLC-S-101.
2. END BEAMS ARE END SECTIONS SLIGHTLY SKEWED WITH TIE-CHORD PIPE DUE TO DIFFERING LONGITUDINAL GRADE OF INNER AND OUTER RINGS.
3. BEARING AND DIAPHRAGM STIFFENERS USE COMMON DETAILING.
4. END BEAMS SHALL USE HIGH PERFORMANCE STEEL (HPS).
5. THREADED ROD ¾"ø x 3" WELDED TO BEAM 6'-7" FROM BRIDGE CENTERLINE FOR SECURING PC PANEL.
6. STOP ATTACHMENT PLATE WELDS ½" FROM EDGES OF SHORTER PLATE. SEE TLC-S-139 FOR WELD DETAILS.
7. WEB ANGLE IS CONSTANT AT 1:6 RELATIVE TO CENTERLINE OF BOX.
8. INNER & OUTER DAMPERS ARE ASSUMED TO BE 1125-LBS EA WITH REF. DIMENSIONS OF 12"Wx11"Hx30"L. DAMPER DESIGN, DETAILING, AND ACCESS HOLE/LID TO BE FINALIZED BY DAMPER SUPPLIER.

CITY OF KIRKLAND
DEPARTMENT OF PUBLIC WORKS
123 FIFTH AVENUE KIRKLAND, WA 98033
(425) 587-3800 www.kirklandwa.gov

NO.	DATE	BY	APPR.	REVISION
0	2019/12/06	CHJS	MWBM	ISSUE FOR BID

MATTHEW D. BAUGHMAN, STATE OF WASHINGTON, STRUCTURAL ENGINEER, PROFESSIONAL ENGINEER
2019 DEC 06

COWI

SCVA DESIGNED BY:	2019/12/06 DATE
CHJS DRAWN BY:	2019/12/06 DATE
MWBM CHECKED BY:	2019/12/06 DATE

CITY OF KIRKLAND
TOTEM LAKE CONNECTION

SUPERSTRUCTURE
END BEAM DETAILS – SHEET 3

SHEET: TLC-S-140
SCALE: AS SHOWN
FILENAME: A088367-S-140.dwg

File: D:\Projectwise\COWI\d0301252\A088367-S-140.dwg Save Date: Nov 26, 2019 1:23 PM Saved By: CHJS

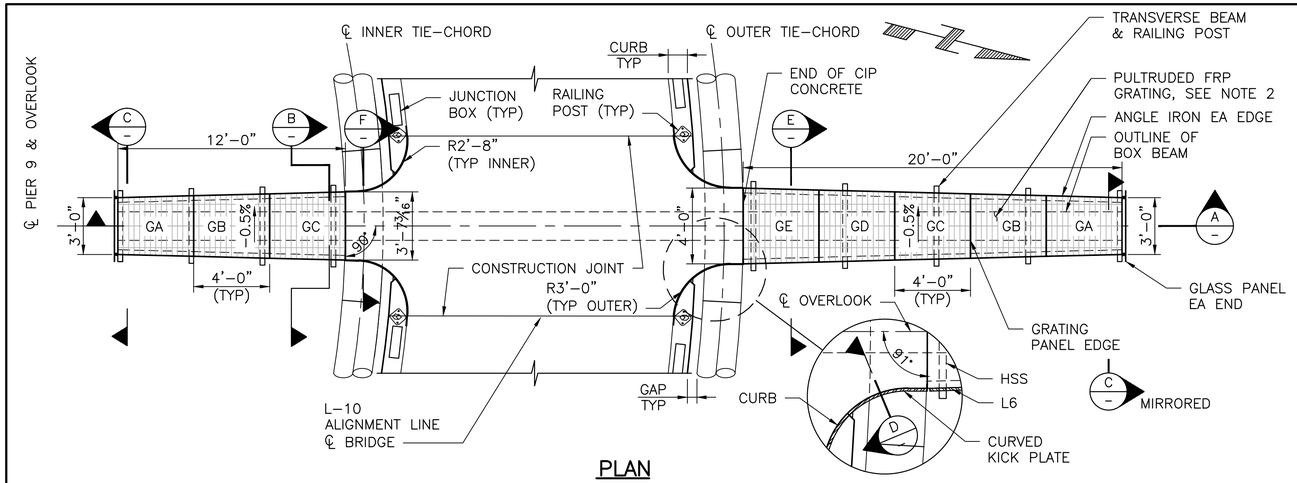

PLAN

SCALE: ¼" = 1'-0"

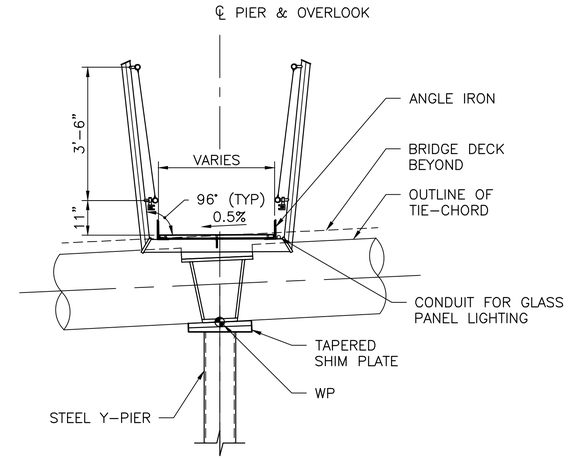

SECTION B

SCALE: ½" = 1'-0"

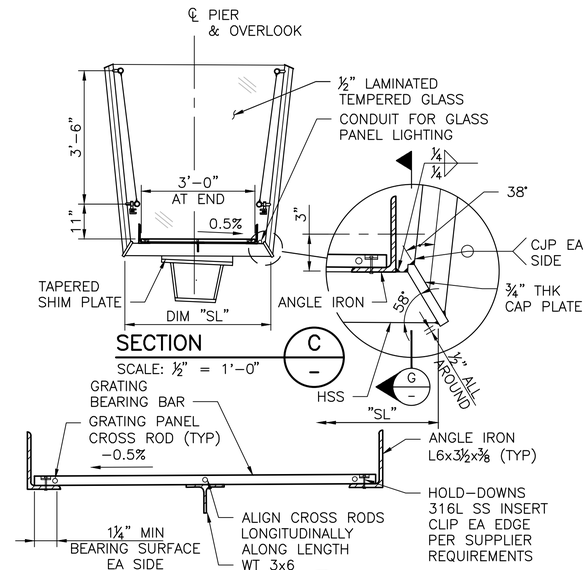

SECTION C

SCALE: ½" = 1'-0"

SECTION E

SCALE: 1½" = 1'-0"

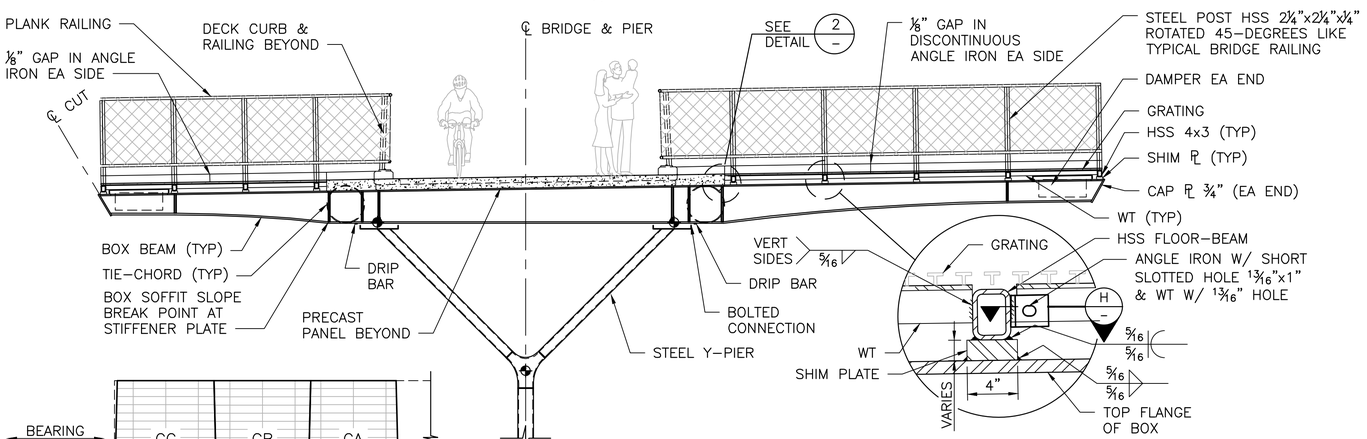

SECTION A

SCALE: ¼" = 1'-0"

TYPICAL FLOORBEAM DETAIL

SCALE: NTS

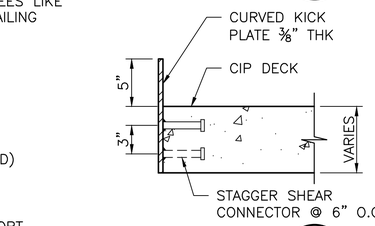

SECTION D

SCALE: 1½" = 1'-0"

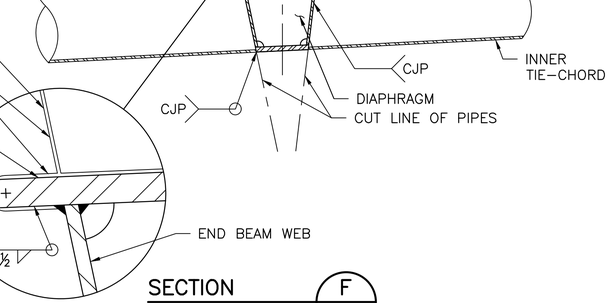

SECTION F

SCALE: ¾" = 1'-0"

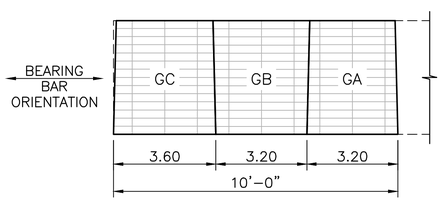

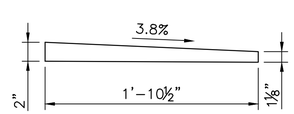

SHIM PLATE THICKNESS

SCALE: 1½" = 1'-0"

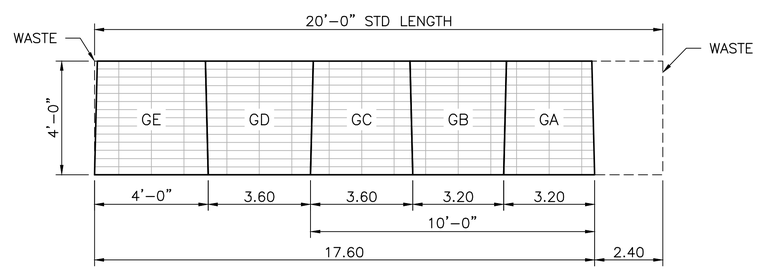

GRATING LAYOUT PLAN

SCALE: ⅜" = 1'-0"

TLC-S-141 TABLE 1: FLOOR-BEAM LENGTH	
FLOOR-BEAM	SOFFIT LENGTH "SL"
FBO-1	3'-9 13/16"
FBO-2	4'-0¾"
FBO-3	4'-3⅝"
FBO-4	4'-6½"
FBO-5	4'-9 7/16"
FBO-6	4'-4 9/16"
FBO-7	4'-2 5/16"
FBO-8	4'-0 1/16"
FBO-9	3'-9 13/16"

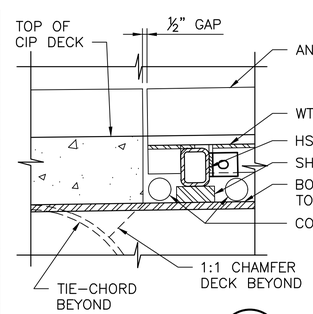

DETAIL 2

SCALE: 1½" = 1'-0"

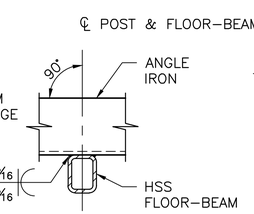

SECTION G

SCALE: 1½" = 1'-0"

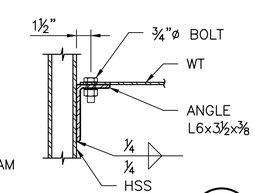

SECTION H

SCALE: ¾" = 1'-0"

NOTES:

1. FOR GENERAL STRUCTURAL NOTES SEE DWG. TLS-S-101.
2. PULTRUDED FRP GRATING SHALL BE MCNICHOLS DURAGRID SERIES MS-WT-1810, ADA, SPF POLYESTER RESIN, GRAY, 1" BEARING BAR HEIGHT, WIDE T-BAR, MEDIUM GRIT SURFACE, 18% OPEN AREA, 48" WIDTH OR APPROVED EQUIVALENT.
3. FOR DETAILS OF FINISHES SEE TLC-A-157.

CITY OF KIRKLAND
DEPARTMENT OF PUBLIC WORKS
123 FIFTH AVENUE KIRKLAND, WA 98033
(425) 587-3800 www.kirklandwa.gov

NO.	DATE	BY	APPR.	REVISION
0	2019/12/06	CHJS	MWBM	ISSUE FOR BID

MATTHEW D. BAUGHMAN — STATE OF WASHINGTON — 48361 — PROFESSIONAL ENGINEER — 2019 DEC 06

COWI

SCVA DESIGNED BY:	2019/12/06 DATE
CHJS DRAWN BY:	2019/12/06 DATE
MWBM CHECKED BY:	2019/12/06 DATE

CITY OF KIRKLAND
TOTEM LAKE CONNECTION

SUPERSTRUCTURE
END BEAM DETAILS – OVERLOOK

SHEET: TLC-S-141
SCALE: AS SHOWN
FILENAME: A088367-S-141.dwg

File: D:\projectwise\cow\d0301252\A088367-S-141.dwg Save Date: Nov 26, 2019 11:14 AM Saved By: CHJS

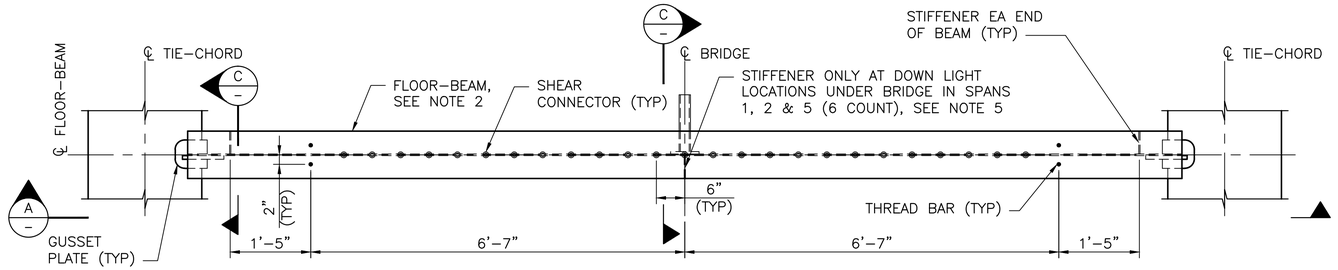

FLOOR-BEAM PLAN

SCALE: ¾" = 1'-0"

TLC-S-142 TABLE 1: FLOOR-BEAM LENGTH		
FLOOR-BEAM TYPE	SLOPE	'LB'
FB1	LEVEL	17'-6"
FB2	-0.3%	TBC BY DETAILER
FB3	-0.6%	TBC BY DETAILER
FB4	-0.9%	TBC BY DETAILER
FB5	-1.2%	TBC BY DETAILER
FB6	-1.5%	17'-3⅝"

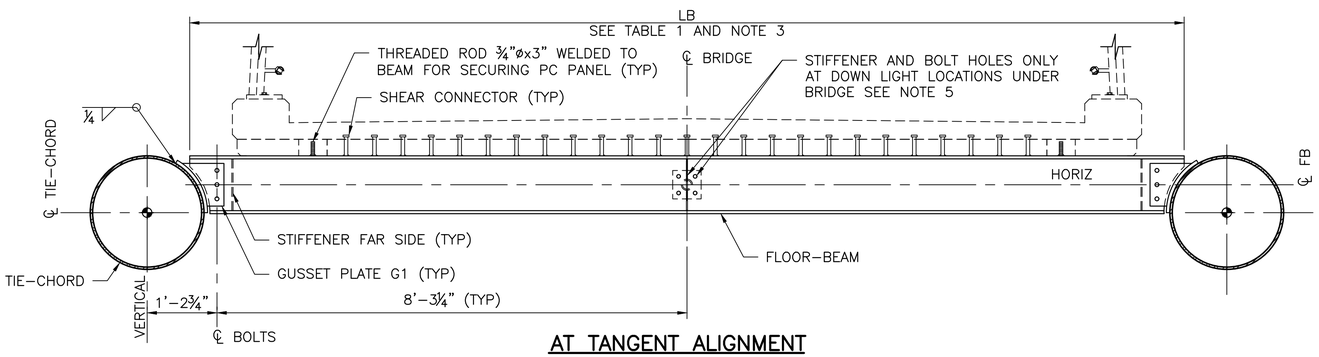

AT TANGENT ALIGNMENT

(FB1)

SIMILAR AT SUPERELEVATION TRANSITION – SEE TABLE 1

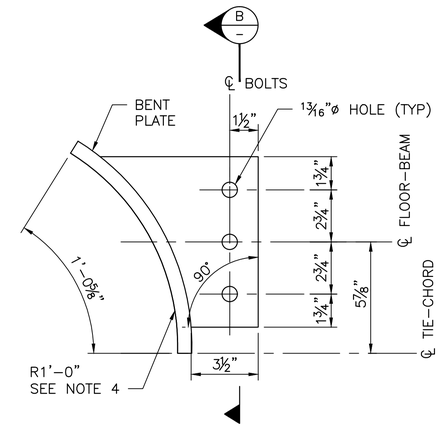

GUSSET PLATE DETAIL G1

SCALE: 3" = 1'-0"

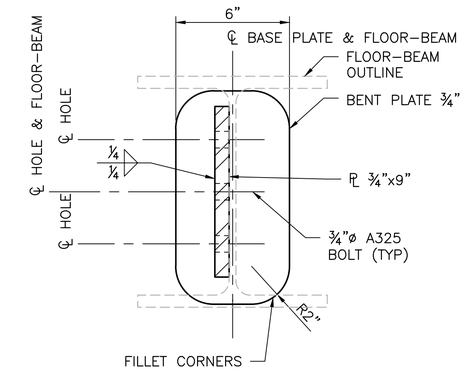

SECTION B

SCALE: 3" = 1'-0"

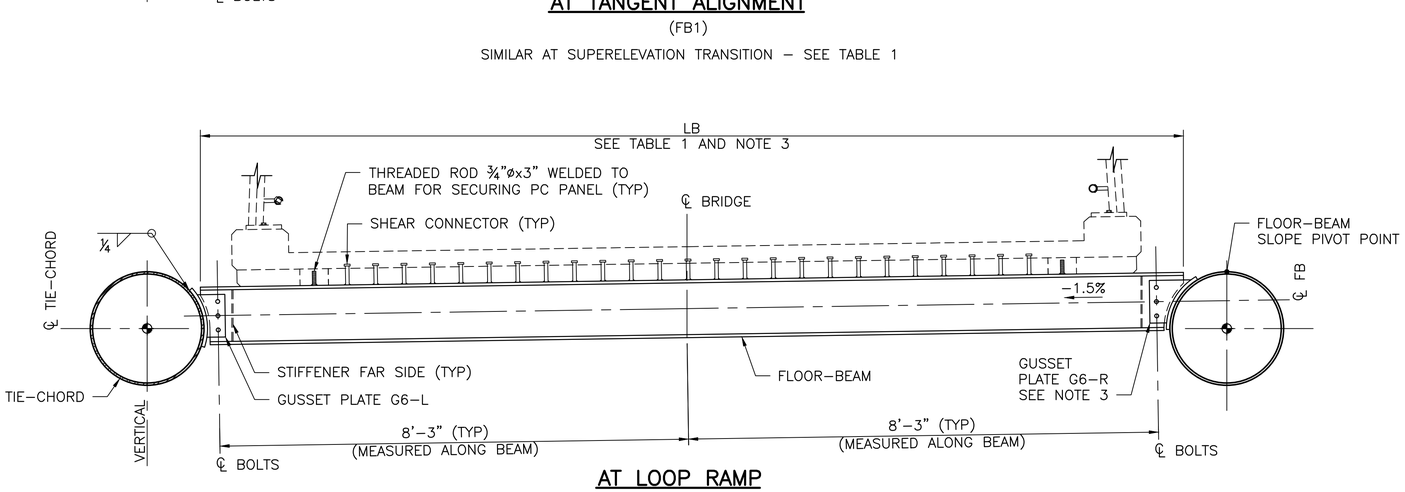

AT LOOP RAMP

(FB6)

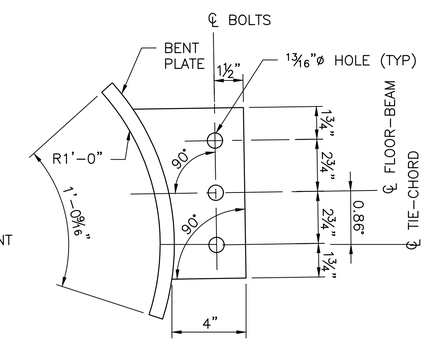

GUSSET PLATE DETAIL G6-L

SCALE: 3" = 1'-0"

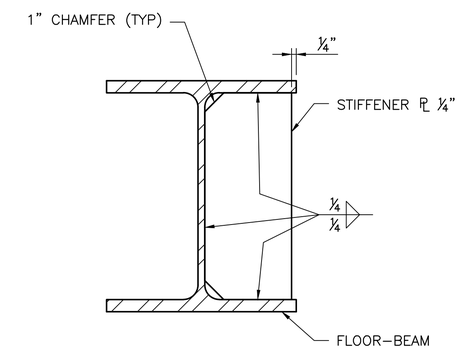

SECTION C

SCALE: 3" = 1'-0"

SECTION A

SCALE: ¾" = 1'-0"

NOTES:

1. FOR GENERAL STRUCTURAL NOTES SEE DWG TLC-S-101.
2. FLOOR-BEAMS ARE W12x58.
3. FLOOR-BEAM LENGTHS, END CUT GEOMETRY AND GUSSET PLATE CONNECTIONS VARY PER THE RESPECTIVE SLOPE OF THE FLOOR-BEAM TYPE AS SHOWN IN TABLE 1.
4. FABRICATOR TO VERIFY RADIUS OF BENT PLATE WORKS WITH ACTUAL O.D. OF THE TIE-CHORD PIPES.
5. FOR DETAILS OF DOWN LIGHTS UNDER BRIDGE SEE ELECTRICAL DWGS.

CITY OF KIRKLAND
DEPARTMENT OF PUBLIC WORKS
123 FIFTH AVENUE KIRKLAND, WA 98033
(425) 587-3800 www.kirklandwa.gov

NO.	DATE	BY	APPR.	REVISION
0	2019/12/06	CHJS	MWBM	ISSUE FOR BID

MATTHEW D. BAUGHMAN — STATE OF WASHINGTON — 47275 — PROFESSIONAL ENGINEER — 2019 DEC 06

COWI

SCVA DESIGNED BY:	2019/12/06 DATE
CHJS DRAWN BY:	2019/12/06 DATE
MWBM CHECKED BY:	2019/12/06 DATE

CITY OF KIRKLAND
TOTEM LAKE CONNECTION

SUPERSTRUCTURE FLOOR BEAM DETAILS

SHEET: TLC-S-142
SCALE: AS SHOWN
FILENAME: A088367-S-142.dwg

File: D:\Projectwise\COWI\dt301252\A088367-S-142.dwg Save Date: Nov 26, 2019 1:22 PM Saved By: CHJS

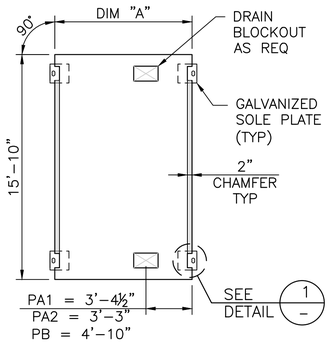

PRECAST PANEL PA, PB & PF

NTS

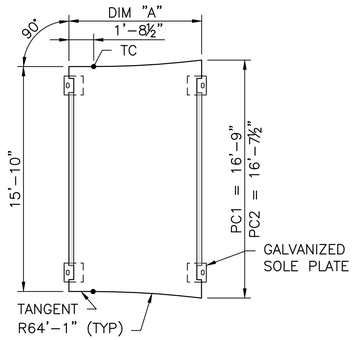

PRECAST PANEL PC

NTS

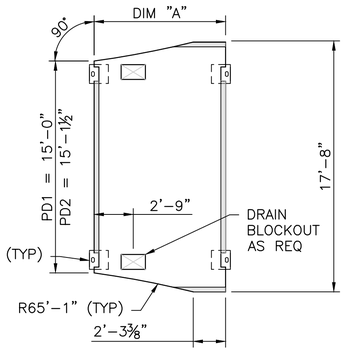

PRECAST PANEL PD

NTS

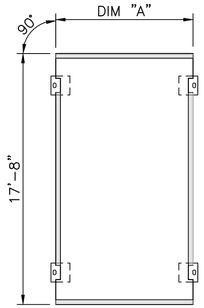

PRECAST PANEL PE

NTS

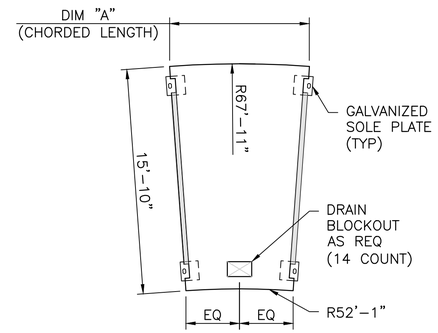

PRECAST PANEL PG, PH, PI & PJ

NTS

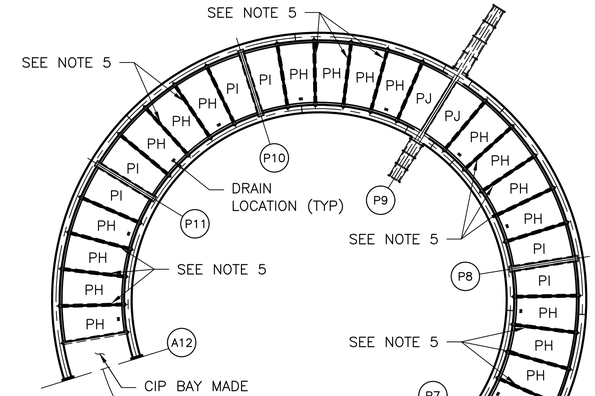

NOTE:
SOLE PLATES NOT REQUIRED AT A1 AND P4 ENDS OF TYPE PA PANELS

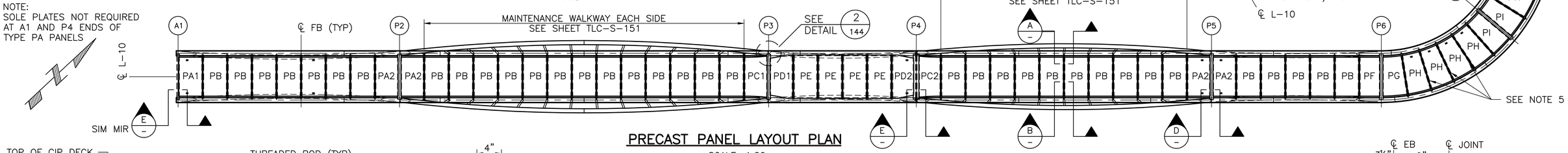

PRECAST PANEL LAYOUT PLAN

SCALE: 1:20

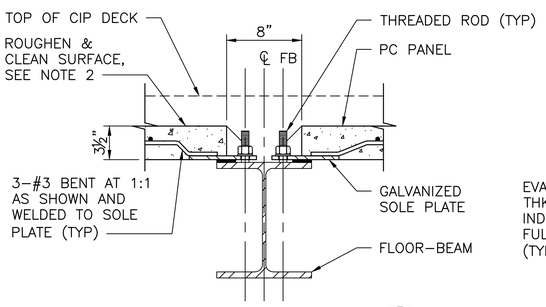

SECTION A –

SCALE: 1½" = 1'-0"
(TYP AT ALL FLOOR-BEAMS, UNO)
(SIM AT END BEAMS)

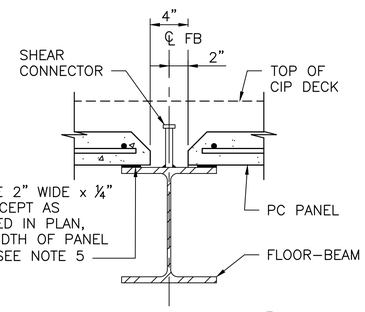

SECTION B –

SCALE: 1½" = 1'-0"
(TYP AT ALL FLOOR-BEAMS, UNO)

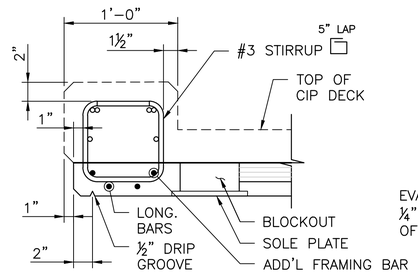

SECTION C –

SCALE: 1½" = 1'-0"
(PC, PD & PE VARY)

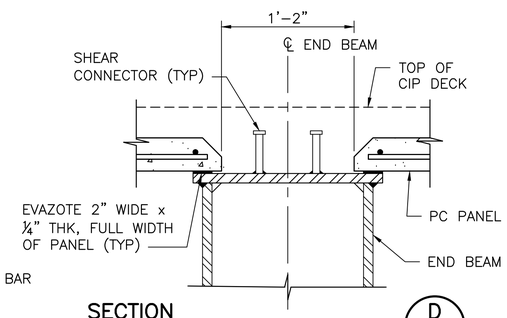

SECTION D –

SCALE: 1½" = 1'-0"
(TYP AT P2, P3, P5 & P6)
(SIM AT P7-P11)

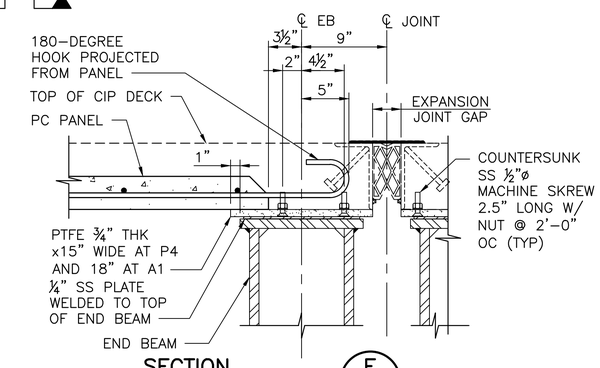

SECTION E –

SCALE: 1½" = 1'-0"
(P4 SHOWN, A1 SIMILAR)

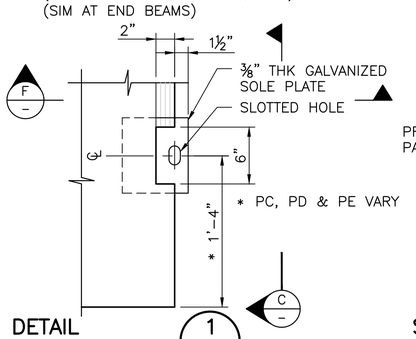

DETAIL 1 –

SCALE: 1½" = 1'-0"
(TYP ALL PANELS, EXCEPT AS NOTED)

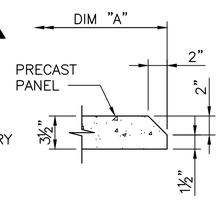

SECTION F –

SCALE: 1½" = 1'-0"

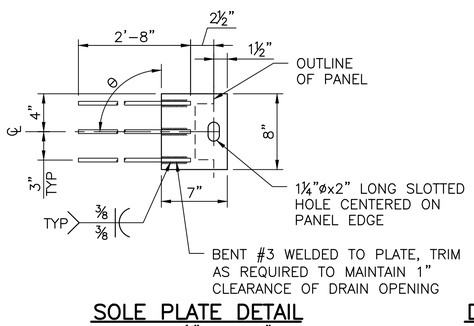

SOLE PLATE DETAIL

SCALE: 1½" = 1'-0"

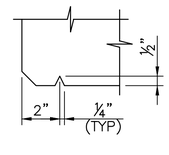

DRIP GROOVE DETAIL

SCALE: 3" = 1'-0"

TLC-S-143 TABLE 1: PANEL DIMENSIONS			
PANEL	DIM "A"	COUNT	θ
PA1	9'-6½"	1	90
PA2	9'-3"	4	90
PB	9'-8"	35	90
PC1	9'-3"	1	90
PC2	8'-9½"	1	90
PD1	9'-3"	1	90
PD2	8'-9½"	1	90
PE	9'-8"	4	90
PF	8'-3"	1	90
PG	10'-0¼"	1	85.7
PH	9'-4½"	23	85.9
PI	8'-11½"	8	85.9
PJ	8'-11½"	2	85.9

NOTES:

1. FOR GENERAL STRUCTURAL NOTES SEE DRAWING TLC-S-101.
2. TOP OF PRECAST PANELS SHALL BE ROUGHENED AND CLEANED PER THE SPECIAL PROVISIONS.
3. COVER FROM SOFFIT SHALL BE 1", EXCEPT AT SOLE PLATE LOCATIONS.
4. CONTRACTOR SHALL BE RESPONSIBLE FOR DESIGN OF LIFTING CONNECTIONS AND MEANS AND METHODS PER THE SPECIAL PROVISIONS.
5. USE ⅝" THICK EVAZOTE HAUNCH AT LOOP RAMP FLOOR-BEAMS AS INDICATED IN PLAN.
6. NUTS ON THREADED RODS AT SOLE PLATES SHALL BE HAND TIGHTENED AFTER PANELS ARE ERECTED IN FINAL POSITION AND PRIOR TO PLACING ANY REBAR.

CITY OF KIRKLAND
DEPARTMENT OF PUBLIC WORKS
123 FIFTH AVENUE KIRKLAND, WA 98033
(425) 587-3800 www.kirklandwa.gov

NO.	DATE	BY	APPR.	REVISION
0	2019/12/06	CHJS	MWBM	ISSUE FOR BID

MATTHEW D. BAUGHMAN — STATE OF WASHINGTON — 40190 — PROFESSIONAL ENGINEER — 2019 DEC 6

COWI

SCVA	2019/12/06
DESIGNED BY:	DATE
CHJS	2019/12/06
DRAWN BY:	DATE
MWBM	2019/12/06
CHECKED BY:	DATE

CITY OF KIRKLAND
TOTEM LAKE CONNECTION

SUPERSTRUCTURE PRECAST PANEL LAYOUT PLAN

SHEET: TLC-S-143
SCALE: AS SHOWN
FILENAME: A088367-S-143.dwg

File: D:\Projectwise\COWI\d0301252\A088367-S-143.dwg Save Date: Nov 26, 2019 1:21 PM Saved By: CHJS

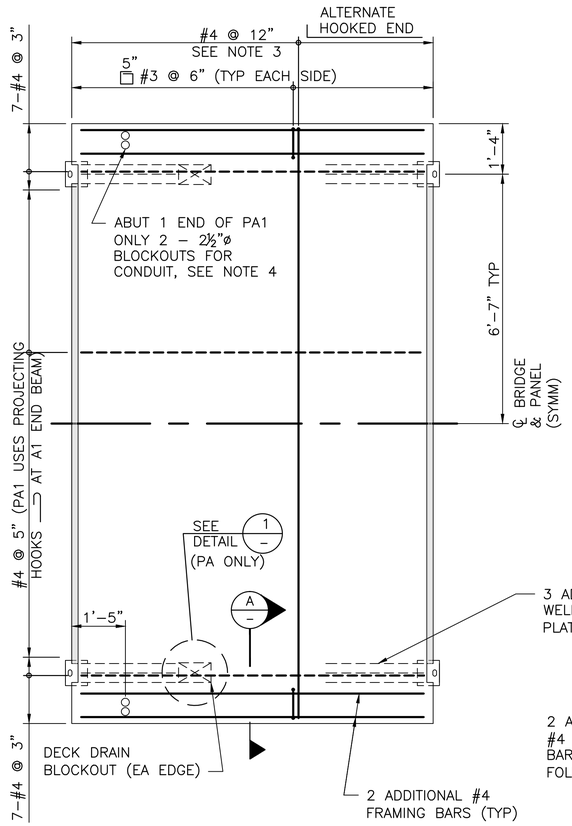

PRECAST PANELS PA, PB & PF REINFORCEMENT PLAN

SCALE: ½" = 1'–0"

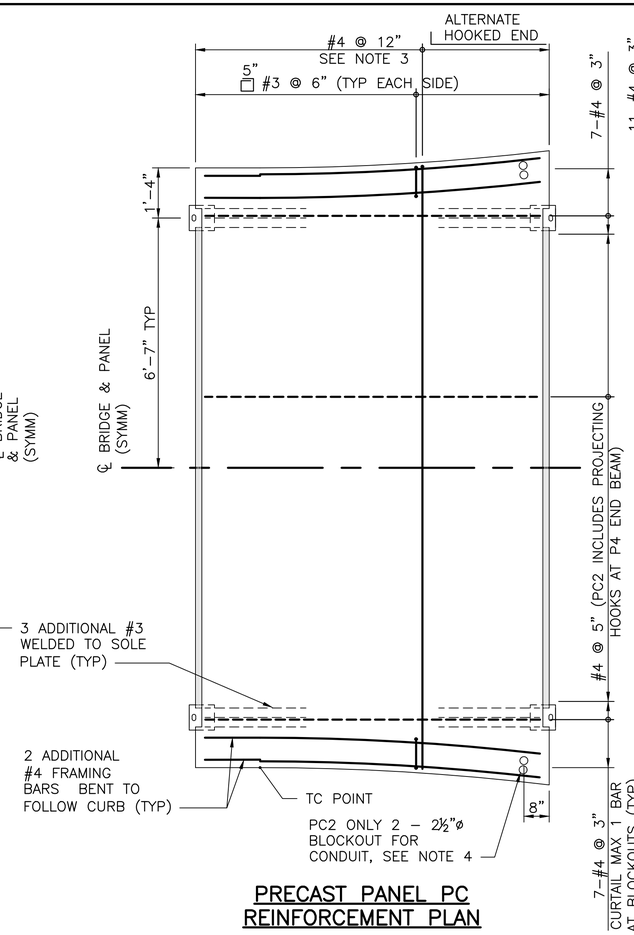

PRECAST PANEL PC REINFORCEMENT PLAN

SCALE: ½" = 1'–0"

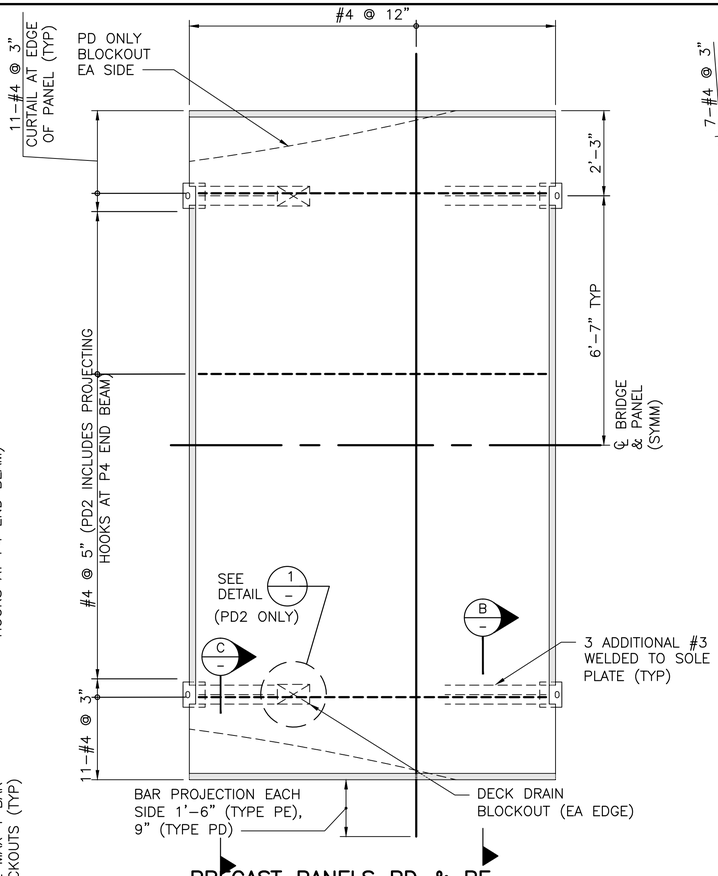

PRECAST PANELS PD & PE REINFORCEMENT PLAN

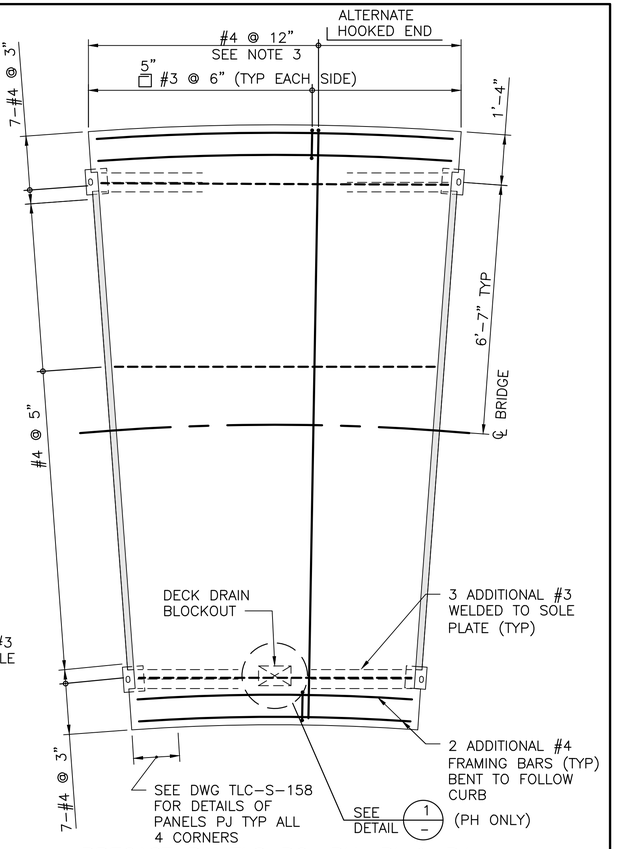

PRECAST PANELS PG, PH, PI & PJ REINFORCEMENT PLAN

SCALE: ½" = 1'–0"

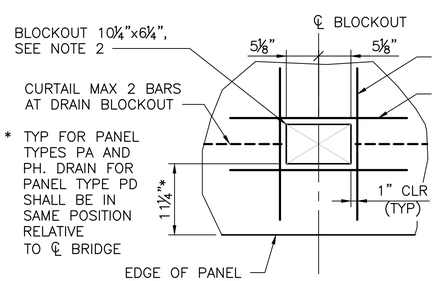

DETAIL 1

SCALE: 1" = 1'–0"

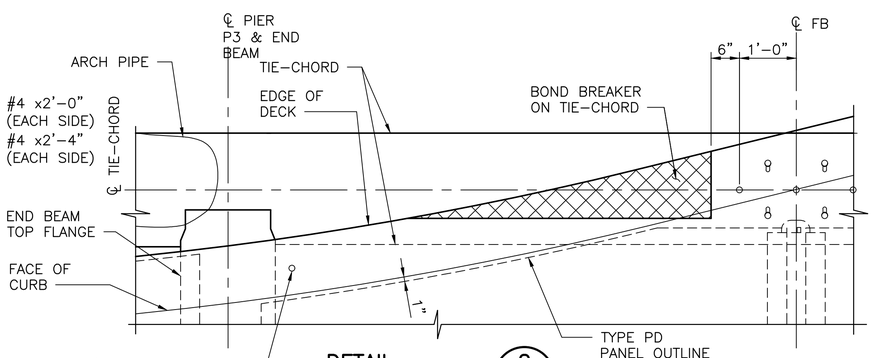

DETAIL 2 (143)

SCALE: ¾" = 1'–0"

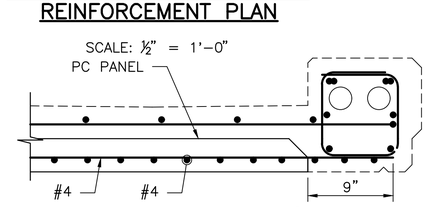

SECTION C

SCALE: 1½" = 1'–0"

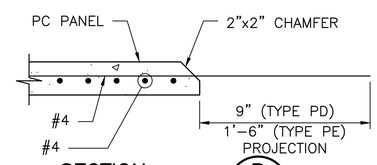

SECTION B

SCALE: 1½" = 1'–0"

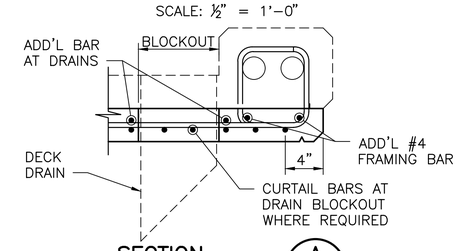

SECTION A

SCALE: 1½" = 1'–0"

NOTES:

1. FOR NOTES SEE DWG TLC–S–143.
2. PROVIDE DRAIN BLOCKOUTS AT DRAIN LOCATIONS AS INDICATED ON DWG TLC–S–143, WITH ADDITIONAL REINFORCEMENT AROUND OPENING PER DETAIL.
3. USE STIRRUP/TIE HOOK FOR PIN DIAMETER. TIE TRANSVERSE BARS TO STIRRUPS.
4. CENTER CONDUIT BLOCKOUTS BETWEEN CURB STIRRUPS WITH 1" MINIMUM CLEARANCE BETWEEN BLOCKOUTS. ORIENT BLOCKOUTS PERPENDICULAR TO CURB TO FACILITATE CONDUIT CONNECTION TO JUNCTION BOX. FILL ANNULUS BETWEEN CONDUIT AND BLOCKOUT WITH SEALANT PRIOR TO CIP DECK CONCRETE PLACEMENT.

CITY OF KIRKLAND
DEPARTMENT OF PUBLIC WORKS
123 FIFTH AVENUE KIRKLAND, WA 98033
(425) 587-3800 www.kirklandwa.gov

NO.	DATE	BY	APPR.	REVISION
0	2019/12/06	CHJS	MWBM	ISSUE FOR BID

MATTHEW D. BAUGHMAN, STATE OF WASHINGTON, U.S. PROFESSIONAL ENGINEER — 2019 DEC 06

COWI

SCVA	2019/12/06	DESIGNED BY: DATE
CHJS	2019/12/06	DRAWN BY: DATE
MWBM	2019/12/06	CHECKED BY: DATE

CITY OF KIRKLAND
TOTEM LAKE CONNECTION

SUPERSTRUCTURE
PRECAST PANEL REINFORCEMENT

SHEET: TLC–S–144
SCALE: AS SHOWN
FILENAME: A088367–S–144.dwg

File: D:\Projectwise\COWI\d0301252\A088367-S-144.dwg Save Date: Nov 26, 2019 1:22 PM Saved By: CHJS

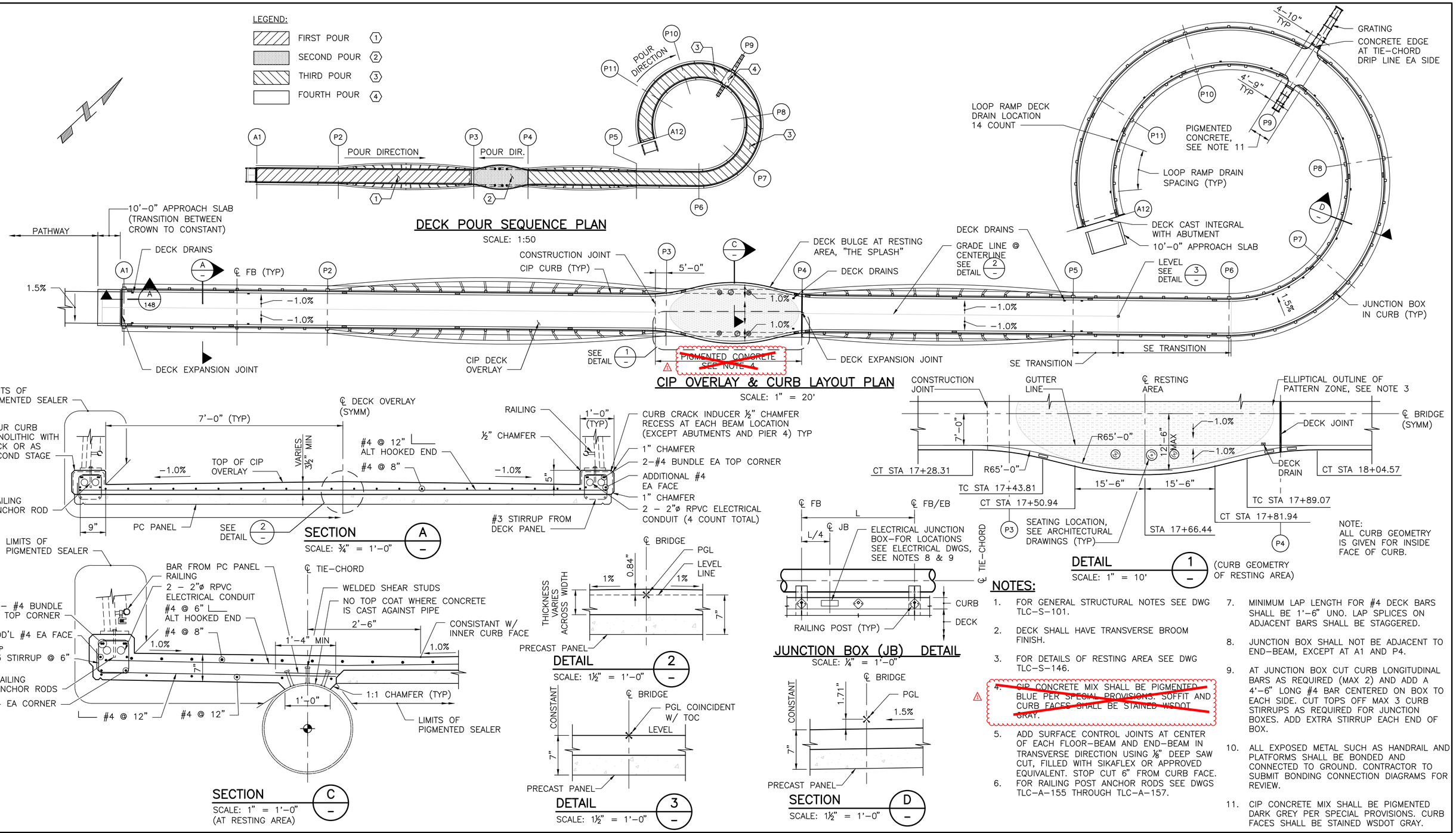

NOTES:

1. FOR GENERAL STRUCTURAL NOTES SEE DWG TLC-S-101.
2. DECK SHALL HAVE TRANSVERSE BROOM FINISH.
3. FOR DETAILS OF RESTING AREA SEE DWG TLC-S-146.
4. ~~CIP CONCRETE MIX SHALL BE PIGMENTED BLUE PER SPECIAL PROVISIONS. SOFFIT AND CURB FACES SHALL BE STAINED WSDOT GRAY.~~
5. ADD SURFACE CONTROL JOINTS AT CENTER OF EACH FLOOR-BEAM AND END-BEAM IN TRANSVERSE DIRECTION USING ⅛" DEEP SAW CUT, FILLED WITH SIKAFLEX OR APPROVED EQUIVALENT. STOP CUT 6" FROM CURB FACE.
6. FOR RAILING POST ANCHOR RODS SEE DWGS TLC-A-155 THROUGH TLC-A-157.
7. MINIMUM LAP LENGTH FOR #4 DECK BARS SHALL BE 1'-6" UNO. LAP SPLICES ON ADJACENT BARS SHALL BE STAGGERED.
8. JUNCTION BOX SHALL NOT BE ADJACENT TO END-BEAM, EXCEPT AT A1 AND P4.
9. AT JUNCTION BOX CUT CURB LONGITUDINAL BARS AS REQUIRED (MAX 2) AND ADD A 4'-6" LONG #4 BAR CENTERED ON BOX TO EACH SIDE. CUT TOPS OFF MAX 3 CURB STIRRUPS AS REQUIRED FOR JUNCTION BOXES. ADD EXTRA STIRRUP EACH END OF BOX.
10. ALL EXPOSED METAL SUCH AS HANDRAIL AND PLATFORMS SHALL BE BONDED AND CONNECTED TO GROUND. CONTRACTOR TO SUBMIT BONDING CONNECTION DIAGRAMS FOR REVIEW.
11. CIP CONCRETE MIX SHALL BE PIGMENTED DARK GREY PER SPECIAL PROVISIONS. CURB FACES SHALL BE STAINED WSDOT GRAY.

CITY OF KIRKLAND
DEPARTMENT OF PUBLIC WORKS
123 FIFTH AVENUE KIRKLAND, WA 98033
(425) 587-3800 www.kirklandwa.gov

NO.	DATE	BY	APPR.	REVISION
1	2020/08/14	MWBM	MWBM	REVISED FOR RE-BID
0	2019/12/06	CHJS	MWBM	ISSUE FOR BID

MATTHEW D. BAUGHMAN, STATE OF WASHINGTON, STRUCTURAL ENGINEER, PROFESSIONAL ENGINEER
2019 DEC 06

COWI

SCVA DESIGNED BY:	2019/12/06 DATE
CHJS DRAWN BY:	2019/12/06 DATE
MWBM CHECKED BY:	2019/12/06 DATE

CITY OF KIRKLAND
TOTEM LAKE CONNECTION

SUPERSTRUCTURE
CIP OVERLAY & CURB LAYOUT PLAN

SHEET: TLC-S-145
SCALE: AS SHOWN
FILENAME: A088367-S-145.dwg

File: D:\Projectwise\COWI\d0301252\A088367-S-145.dwg Save Date: Nov 26, 2019 1:21 PM Saved By: CHJS

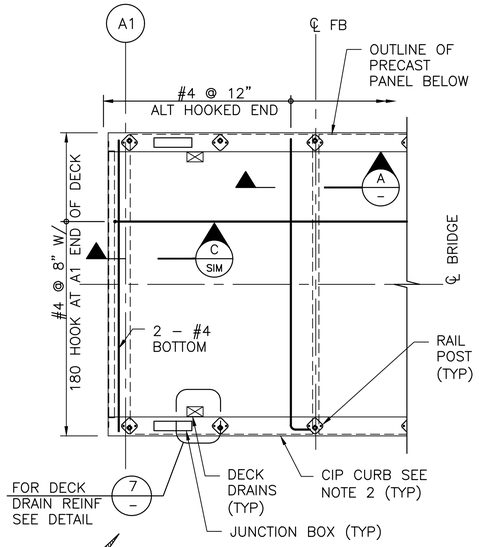

DETAIL 1

SCALE: ¼" = 1'–0"

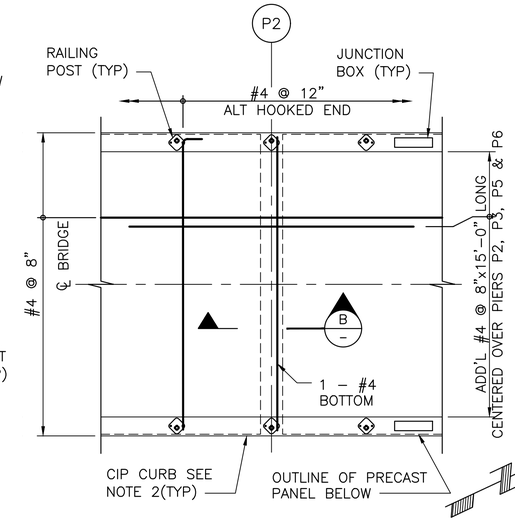

DETAIL 2

SCALE: ¼" = 1'–0"
(TYP FOR PIERS P2, P3, P5, P6)

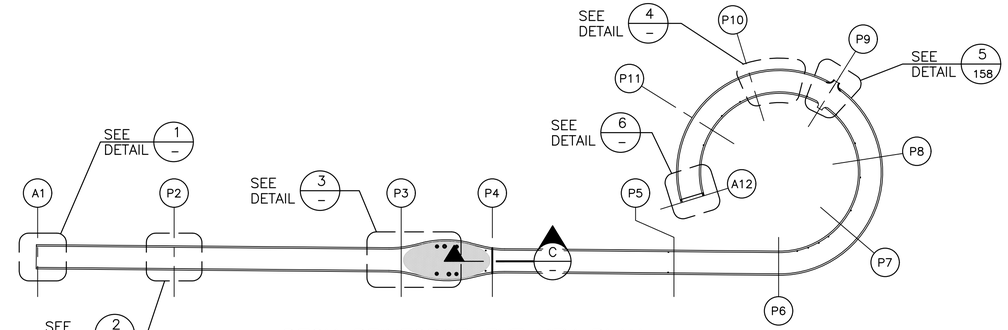

DECK REINFORCEMENT KEY PLAN

SCALE: 1:50

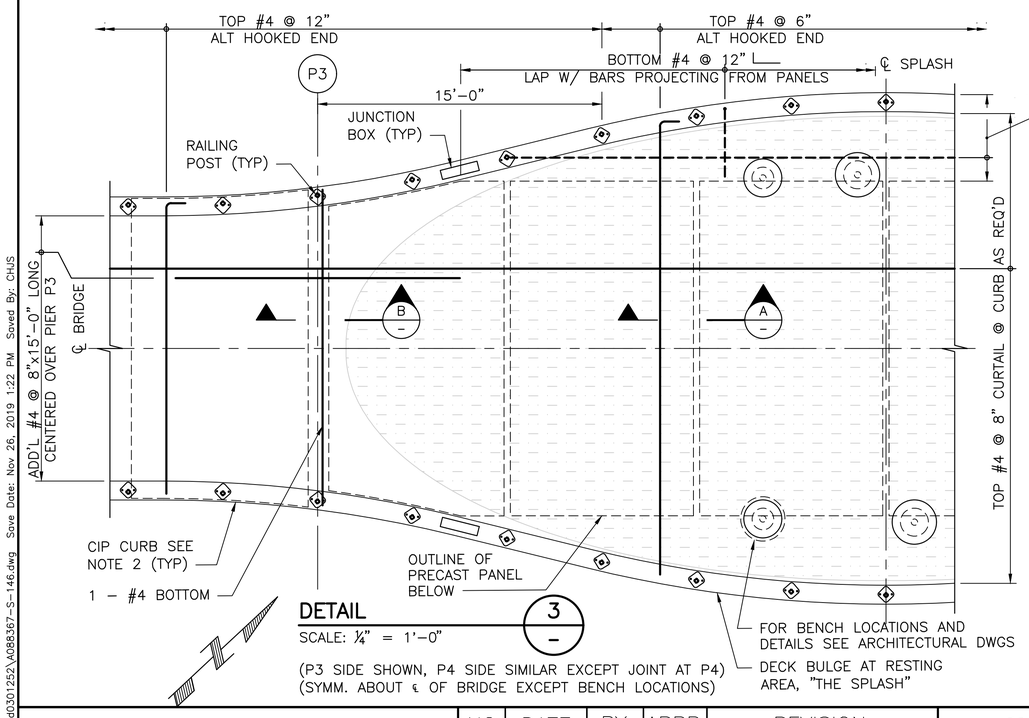

DETAIL 3

SCALE: ¼" = 1'–0"

(P3 SIDE SHOWN, P4 SIDE SIMILAR EXCEPT JOINT AT P4)
(SYMM. ABOUT ℄ OF BRIDGE EXCEPT BENCH LOCATIONS)

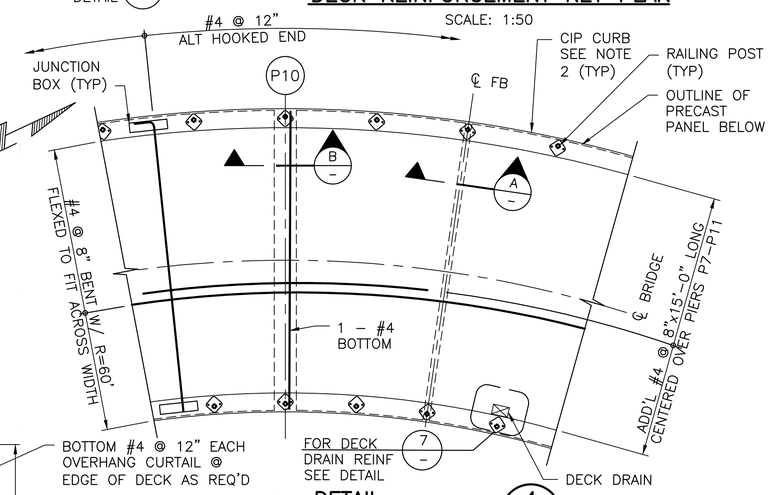

DETAIL 4

SCALE: ¼" = 1'–0"
(TYP FOR PIERS P7–P11)

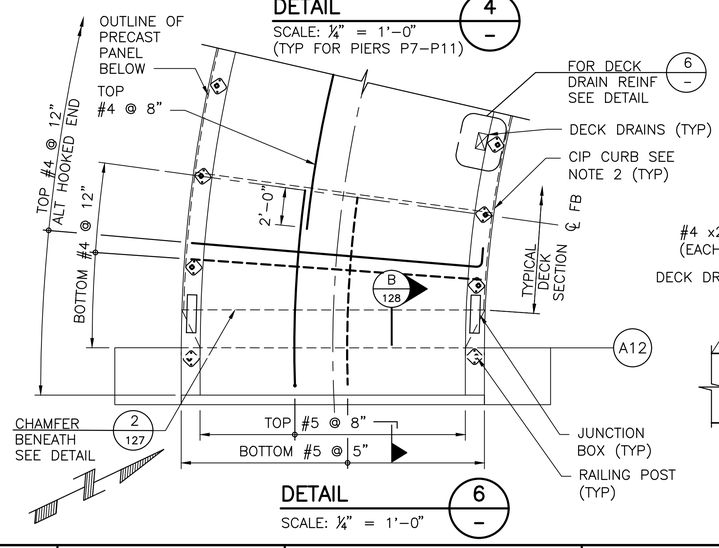

DETAIL 6

SCALE: ¼" = 1'–0"

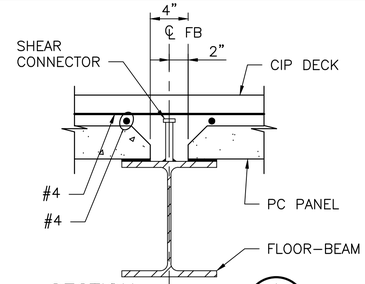

SECTION A

SCALE: 1½" = 1'–0"
(TYP ALL FLOOR–BEAMS)

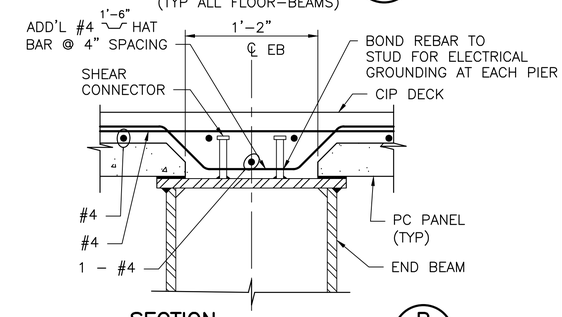

SECTION B

SCALE: 1½" = 1'–0"
(TYP ALL END BEAMS EXCEPT P4)

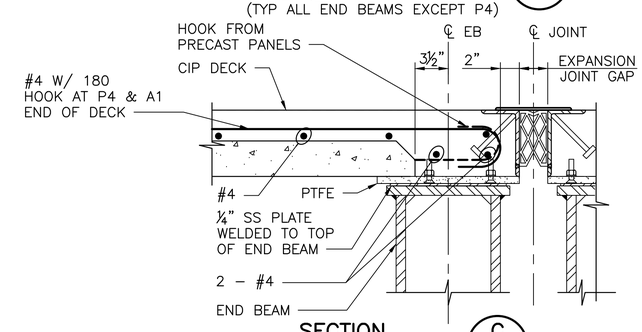

SECTION C

SCALE: 1½" = 1'–0"
(P4 SHOWN, A1 SIMILAR)

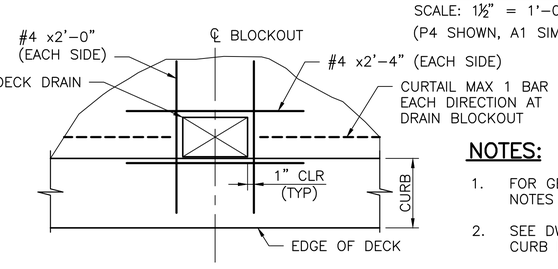

DETAIL 7

SCALE: 1" = 1'–0"

NOTES:

1. FOR GENERAL STRUCTURAL NOTES SEE DWG TLC–S–101.
2. SEE DWG TLC–S–145 FOR CURB REINFORCEMENT.
3. PLACE DRAINS IN POSITION PRIOR TO POURING OVERLAY.

CITY OF KIRKLAND
DEPARTMENT OF PUBLIC WORKS
123 FIFTH AVENUE KIRKLAND, WA 98033
(425) 587-3800 www.kirklandwa.gov

NO.	DATE	BY	APPR.	REVISION
0	2019/12/06	CHJS	MWBM	ISSUE FOR BID

MATTHEW D. BAUGHMAN — STATE OF WASHINGTON — 48190 — PROFESSIONAL ENGINEER
2019 DEC 6

COWI

SCVA — DESIGNED BY:	2019/12/06 DATE
CHJS — DRAWN BY:	2019/12/06 DATE
MWBM — CHECKED BY:	2019/12/06 DATE

CITY OF KIRKLAND
TOTEM LAKE CONNECTION

SUPERSTRUCTURE CIP OVERLAY & CURB REINFORCEMENT

SHEET: TLC–S–146
SCALE: AS SHOWN
FILENAME: A088367–S–146.dwg

File: D:\Projectwise\COWI\d0301252\A088367-S-146.dwg Save Date: Nov 26, 2019 1:22 PM Saved By: CHJS

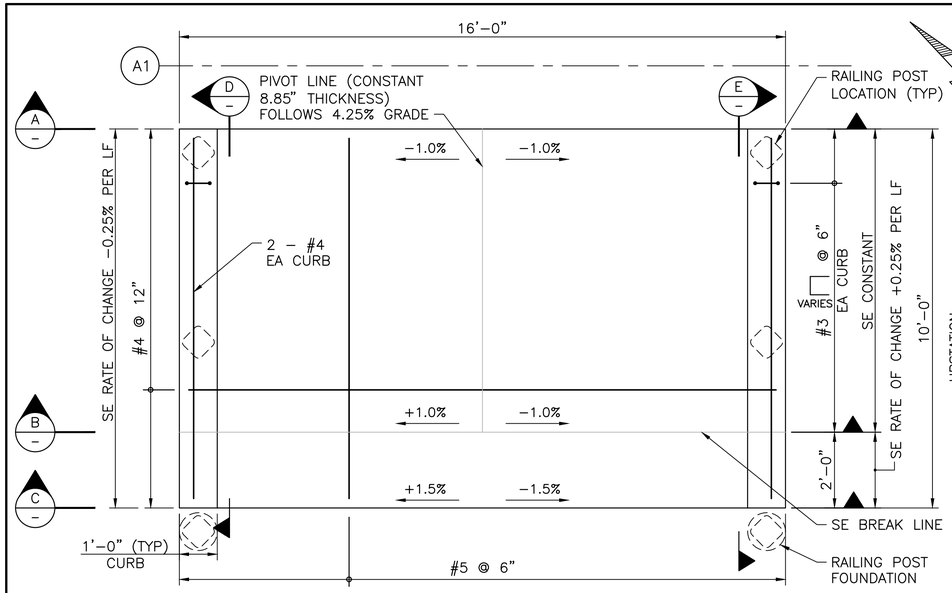

A1 APPROACH SLAB PLAN

SCALE: ½" = 1'-0"

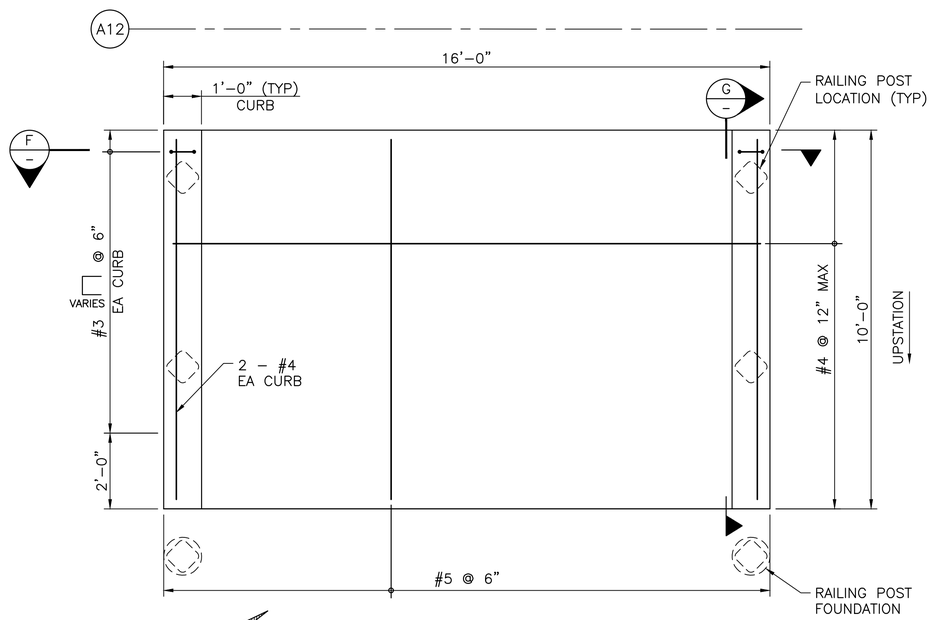

A12 APPROACH SLAB PLAN

SCALE: ½" = 1'-0"

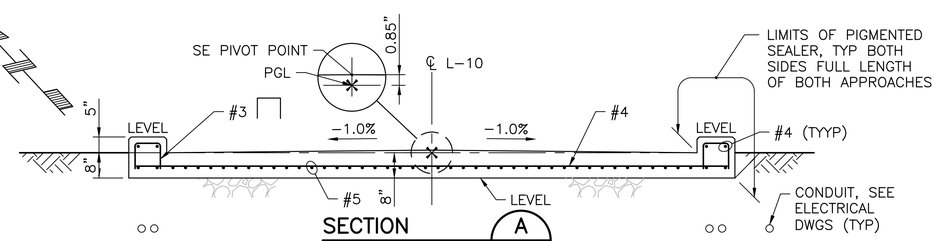

SECTION A

SCALE: ½" = 1'-0" (AT NORTH END)

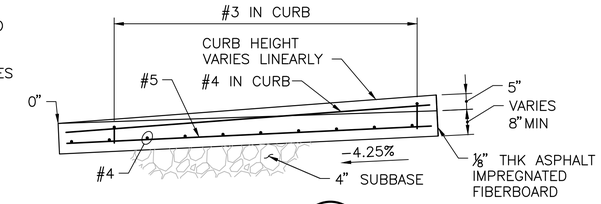

SECTION D

SCALE: ½" = 1'-0"

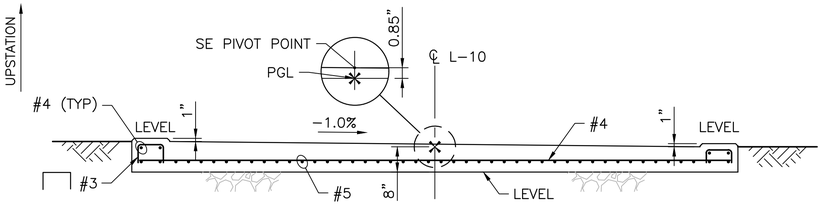

SECTION B

SCALE: ½" = 1'-0" (AT SE BREAK LINE)

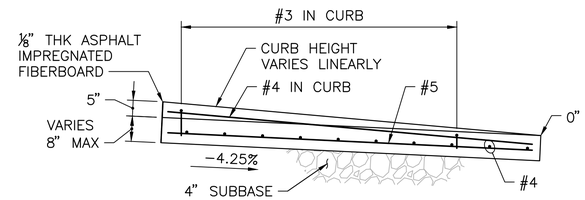

SECTION E

SCALE: ½" = 1'-0"

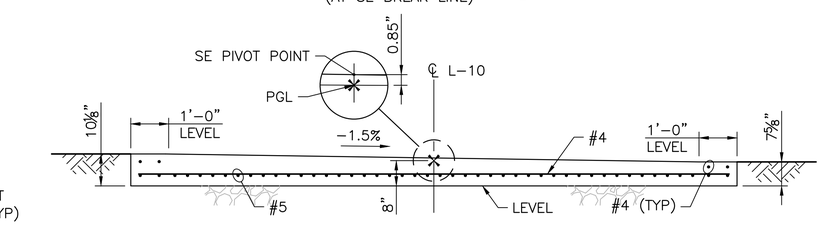

SECTION C

SCALE: ½" = 1'-0" (AT SOUTH END)

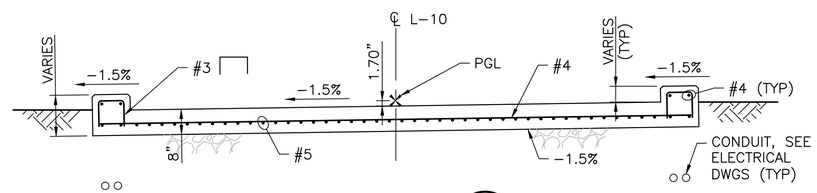

SECTION F

SCALE: ½" = 1'-0"

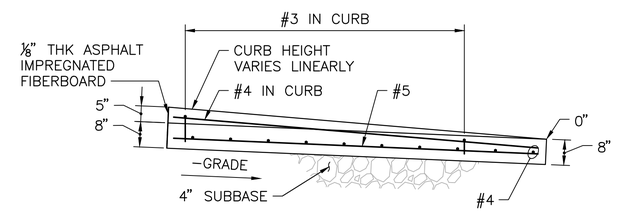

SECTION G

SCALE: ½" = 1'-0"

NOTES:

1. FOR GENERAL STRUCTURAL NOTES SEE DWG TLC-S-101.
2. WALKING SURFACE OF CONCRETE SHALL RECEIVE A TRANSVERSE BROOM FINISH.

CITY OF KIRKLAND
DEPARTMENT OF PUBLIC WORKS
123 FIFTH AVENUE KIRKLAND, WA 98033
(425) 587-3800 www.kirklandwa.gov

NO.	DATE	BY	APPR.	REVISION
0	2019/12/06	CHJS	MWBM	ISSUE FOR BID

MATTHEW D. BAUGHMAN — STATE OF WASHINGTON — PROFESSIONAL ENGINEER — 2019 DEC 06

COWI

SCVA — DESIGNED BY:	2019/12/06 DATE
CHJS — DRAWN BY:	2019/12/06 DATE
MWBM — CHECKED BY:	2019/12/06 DATE

CITY OF KIRKLAND
TOTEM LAKE CONNECTION

SUPERSTRUCTURE APPROACH SLAB

SHEET: TLC-S-147
SCALE: AS SHOWN
FILENAME: A088367-S-147.dwg

File: D:\Projectwise\COWI\d0301252\A088367-S-147.dwg Save Date: Nov 26, 2019 1:23 PM Saved By: CHJS

TABLE 148–1: GAP "A" SETTING DIMENSIONS (INCHES)					
TEMPERATURE (°F)	20	40	60	80	100
ABUT 1	3¾"	3⅜"	3"	2⅝"	2¼"
PIER 4	3½"	3¼"	3"	2¾"	2½"

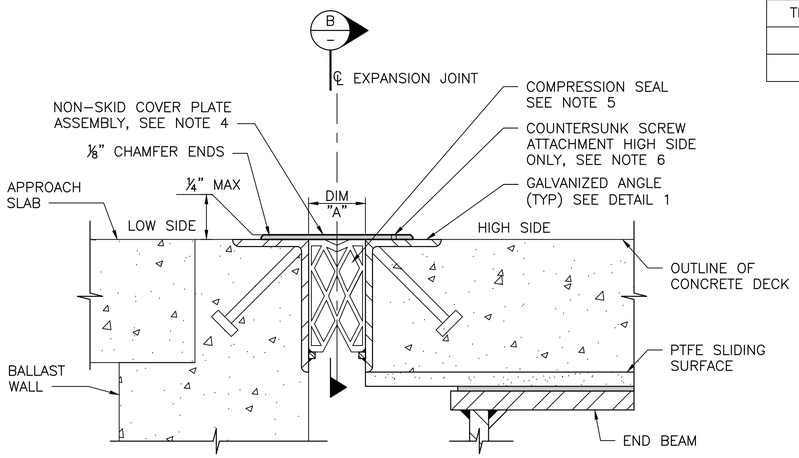

SECTION A/145

SCALE: 3" = 1'–0"
(A1 SHOWN, P4 SIMILAR)

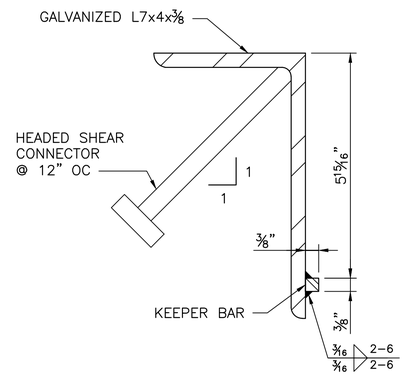

GALVANIZED ANGLE DETAIL 1/–

SCALE: 6" = 1'–0"
(4 REQUIRED)

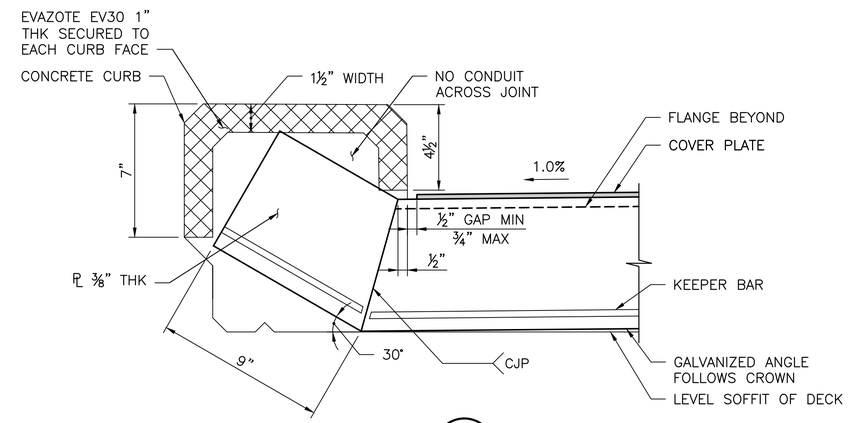

SECTION B/–

SCALE: 3" = 1'–0"
(COMPRESSION SEAL NOT SHOWN FOR CLARITY)

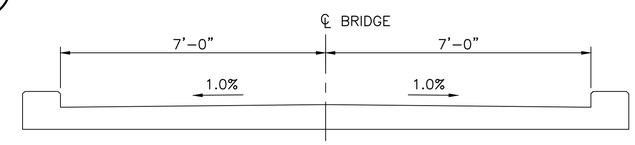

A1 JOINT ELEVATION

SCALE: ½" = 1'–0"

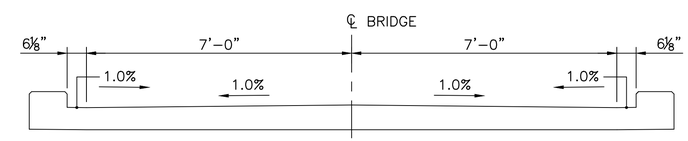

P4 JOINT ELEVATION

SCALE: ½" = 1'–0"

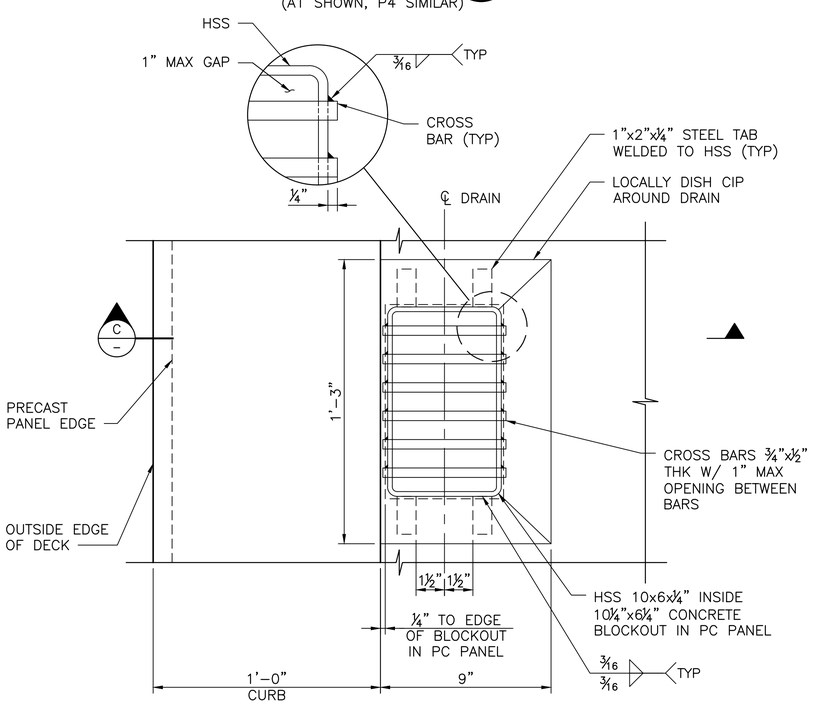

DECK DRAIN PLAN

SCALE: 3" = 1'–0"

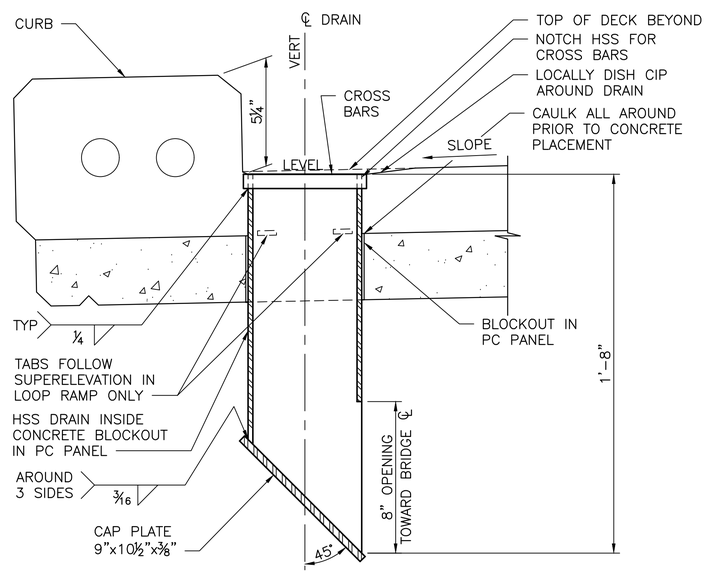

SECTION C/–

SCALE: 3" = 1'–0"
(DRAINS IN LOOP RAMP SHOWN DRAINS IN ARCH SPANS SIMILAR)

NOTES:

1. FOR GENERAL STRUCTURAL NOTES SEE DWG. TLS–S–101.
2. PAINTED SURFACES SHALL MATCH COLOR USED ON RAILING POSTS.
3. UNLESS NOTED OTHERWISE, ALL STEEL COMPONENTS SHALL BE HOT–DIPPED GALVANIZED AFTER FABRICATION AND ASSEMBLY.
4. COVER PLATE SYSTEM SHALL EXTEND FULL WIDTH BETWEEN CURBS USING WABO SAFETY FLEX ELASTOMERIC, PAINTED STEEL C/W GRIT SURFACE, OR APPROVED EQUIVALENT.
5. COMPRESSION SEAL SHALL EXTEND FULL LENGTH OF ANGLES.
6. BOLTS SHALL BE TORQUED USING TURN–OF–THE–NUT AFTER INSTALLATION OF COMPRESSION SEAL AND COVER PLATE.

CITY OF KIRKLAND
DEPARTMENT OF PUBLIC WORKS
123 FIFTH AVENUE KIRKLAND, WA 98033
(425) 587-3800 www.kirklandwa.gov

NO.	DATE	BY	APPR.	REVISION
0	2019/12/06	CHJS	MWBM	ISSUE FOR BID

MATTHEW D. BAUGHMAN — STATE OF WASHINGTON — STRUCTURAL ENGINEER — PROFESSIONAL ENGINEER
2019 DEC 06

COWI

SCVA — DESIGNED BY:	2019/12/06 DATE
CHJS — DRAWN BY:	2019/12/06 DATE
MWBM — CHECKED BY:	2019/12/06 DATE

CITY OF KIRKLAND
TOTEM LAKE CONNECTION

DRAINS AND JOINT DETAILS

SHEET: TLC–S–148
SCALE: AS SHOWN
FILENAME: A088367–S–148.dwg

File: D:\Projectwise\COWI\d0301252\A088367–S–148.dwg Save Date: Nov 26, 2019 1:22 PM Saved By: CHJS

LEGEND:

- TYPE 1 = MULTI–DIRECTIONAL BEARING
- TYPE 2 = LONGITUDINALLY GUIDED BEARING
- TYPE 3 = TRANSVERSELY GUIDED BEARING
- TYPE 4 = FIXED BEARING
- FREE DIRECTION
- FIXED DIRECTION

TLC–S–149 TABLE 1: BEARING DESIGN LOADS AND MOVEMENTS (PER BEARING)

LOCATION	BEARING TYPES	END BEAM SLOPE %	VERTICAL				TRANSVERSE			LONGITUDINAL			DISPLACEMENT			ROTATION			TOP OF BEARING ELEVATION
			DL KIP	SERVICE [MAX] KIP	STRENGTH [MIN] KIP	STRENGTH [MAX] KIP	SERVICE KIP	STRENGTH KIP	EXTREME KIP	SERVICE KIP	STRENGTH KIP	EXTREME KIP	SERVICE IN.	STRENGTH IN.	EXTREME IN. *	SERVICE RAD	STRENGTH RAD	EXTREME RAD	
A1	1,2	+4.1	60	90	20	120	20	30	290	0	0	0	1.8	1.7	+7.5/–3.5	0.006	0.008	0.006	160.33
P2	1,2	+2.3	160	250	70	340	20	30	290	0	0	0	1.4	1.3	+7.5/–3.5	0.003	0.004	0.002	163.22
P3	3,4	–0.7	150	240	60	330	30	40	290	10	20	100	0	0	0	0.002	0.003	0.003	164.43
P4S	1,1	–1.9	40	80	10	110	0	0	0	0	0	0	0.5	0.5	+7.5/–3.5	0.004	0.005	0.003	163.66
P4N	1,2	–1.9	80	120	30	160	20	30	290	0	0	0	1.2	1.1	4.0	0.007	0.010	0.006	163.63
P5	3,4	–4.3	130	200	50	280	20	30	290	20	30	100	0	0	0	0.003	0.003	0.003	159.93
P6	1,2	–4.3	70	120	20	160	40	50	290	0	0	0	0.5	0.6	4.0	0.003	0.004	0.002	156.96

* "+" = NE
* "–" = SW

NOTES:

1. DISPLACEMENT AND ROTATIONS ARE EACH WAY (± THE VALUES SHOWN), UNO.
2. TRANSVERSE REACTIONS ARE TAKEN BY TYPES 2 AND 4 BEARINGS ONLY.
3. LONGITUDINAL REACTIONS ARE TAKEN BY TYPES 3 AND 4 BEARINGS ONLY.
4. TRANSVERSE MOVEMENT DEMANDS AT TYPES 1 AND 3 BEARINGS IS ± ¼".
5. TRANSVERSE ROTATION DEMANDS ARE NEGLIGIBLE.
6. VERTICAL ROTATION DEMANDS ARE NEGLIGIBLE.
7. THE TABLE ABOVE DOES NOT INCLUDE AN ALLOWANCE FOR UNCERTAINTIES AS REQUIRED BY AASHTO LRFD BDS.
8. DISPLACEMENTS ARE BASED ON THE BEARINGS BEING INSTALLED AT 60°F. SEE EXPANSION BEARING SETTING TABLE.

TLC–S–149 TABLE 2: EXPANSION BEARING SETTING TABLE *

LOCATION	0°F	30°F	60°F	90°F	120°F
A1	+1⅛"	+½"	0	–½"	–1⅛"
P2	+¾"	+⅜"	0	–⅜"	–¾"
P4S	–¼"	–⅛"	0	+⅛"	+¼"
P4N	+½"	+¼"	0	–¼"	–½"
P6	–⅜"	–3⁄16"	0	+3⁄16"	+⅜"

* "+" = NE
* "–" = SW

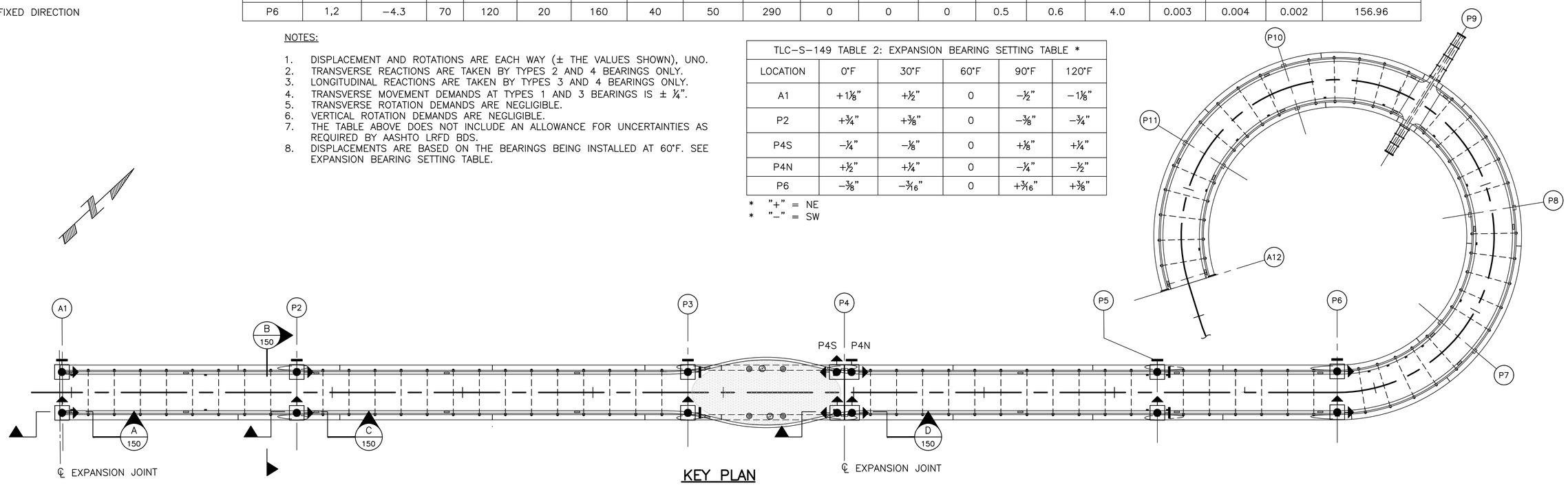

KEY PLAN
SCALE: 1" = 20'

NOTES:

1. FOR GENERAL STRUCTURAL NOTES SEE DWG TLC–S–101.
2. ALL BEARINGS SHALL BE DISC BEARINGS, DESIGNED AND FABRICATED IN ACCORDANCE WITH THE SPECIAL PROVISIONS. BEARINGS SHALL BE DESIGNED AND DETAILED TO BE EASILY REPLACEABLE.
3. BEARING SUPPLIER SHALL SUBMIT DETAILED DESIGN CALCULATIONS AND SHOP DRAWINGS TO THE ENGINEER OF RECORD FOR REVIEW AND APPROVAL PRIOR TO BEGINNING FABRICATION.
4. BEARING REPLACEMENT PROCEDURE:
   - i. DESIGN AND DETAILS OF JACKING PROCESS FOR BEARING REPLACEMENT SHALL BE REVIEWED AND APPROVED BY A WASHINGTON SE.
   - ii. BRIDGE SHALL BE CLOSED TO TRAFFIC DURING ALL STAGES OF JACKING AND BEARING REPLACEMENT. JACKING SHALL OCCUR NEAR THE NOMINAL CONSTRUCTION TEMPERATURE TO MINIMIZE RESTRAINT FORCES.
4. BEARING REPLACEMENT PROCEDURE (CONTINUED):
   - iii. JACKS SHALL BE LOCATED AS SHOWN ON PIER AND ABUTMENT SHEETS. A LOAD DISTRIBUTION PLATE SHALL BE PLACED ON THE CONCRETE TO LIMIT THE BEARING STRESS TO 4 KSI.
   - iv. EACH ENTIRE BEARING ASSEMBLY, BETWEEN THE SOLE PLATE AND THE MASONRY PLATE, SHALL BE REPLACEABLE WITHOUT DAMAGE TO THE STRUCTURE AND WITHOUT LIFTING THE SUPERSTRUCTURE MORE THAN ½".
   - v. AT A GIVEN PIER OR ABUTMENT, ALL JACKS SHALL BE LOADED SIMULTANEOUSLY, ENSURING THAT THE MAXIMUM DIFFERENTIAL JACKING HEIGHT BETWEEN THEM IS LESS THAN ⅛".

CITY OF KIRKLAND
DEPARTMENT OF PUBLIC WORKS
123 FIFTH AVENUE KIRKLAND, WA 98033
(425) 587-3800 www.kirklandwa.gov

NO.	DATE	BY	APPR.	REVISION
0	2019/12/06	CHJS	MWBM	ISSUE FOR BID

MATTHEW D. BAUGHMAN, STATE OF WASHINGTON, STRUCTURAL ENGINEER, PROFESSIONAL ENGINEER
2019 DEC 06

COWI

SCVA	2019/12/06	DESIGNED BY: DATE
CHJS	2019/12/06	DRAWN BY: DATE
MWBM	2019/12/06	CHECKED BY: DATE

CITY OF KIRKLAND
TOTEM LAKE CONNECTION

BEARING PLAN

SHEET: TLC–S–149
SCALE: AS SHOWN
FILENAME: A088367–S–149.dwg

File: D:\Projectwise\COWI\d0301252\A088367–S–149.dwg Save Date: Nov 26, 2019 1:21 PM Saved By: CHJS

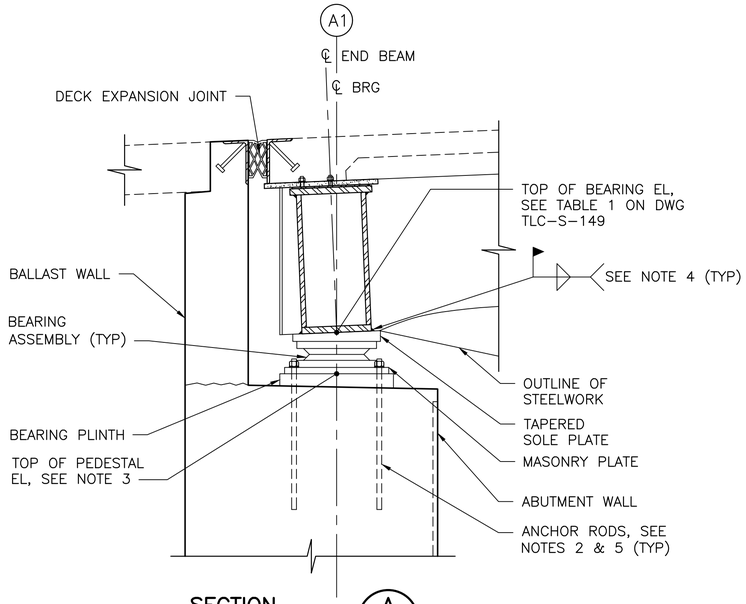

SECTION A / 149
SCALE: 1" = 1'–0"

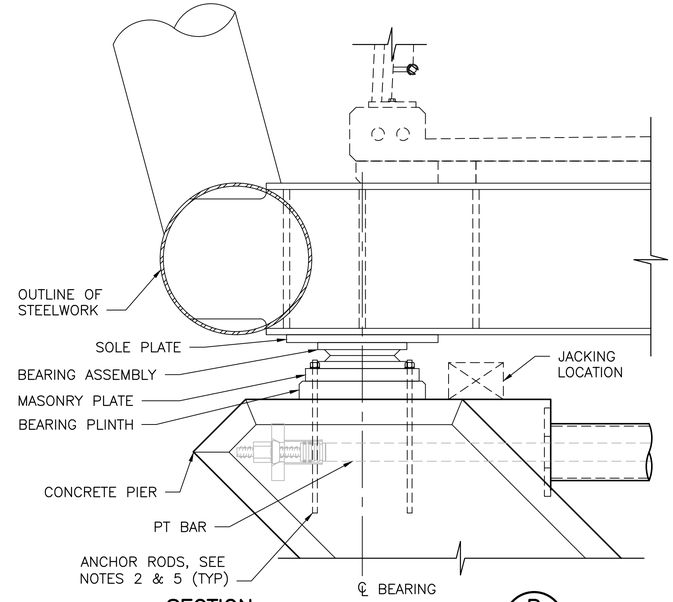

SECTION B / 149
SCALE: 1" = 1'–0"
(PIER 2 SHOWN, PIERS 3, 5 & 6 SAME)
(ABUTMENT 1 & PIER 4 SIMILAR)

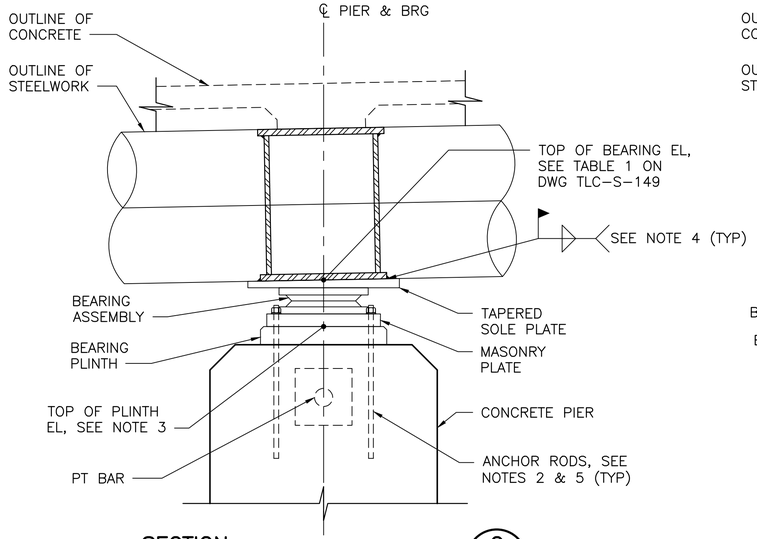

SECTION C / 149
SCALE: 1" = 1'–0"
(PIER 2 SHOWN, PIERS 3, 5 & 6 SIMILAR)

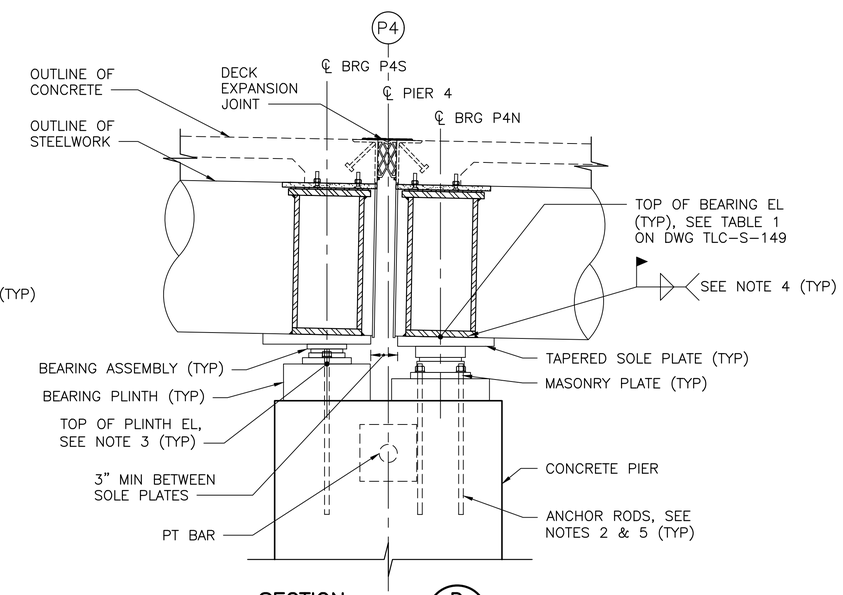

SECTION D / 149
SCALE: 1" = 1'–0"

NOTES:

1. FOR GENERAL STRUCTURAL NOTES SEE DWG TLC–S–101.
2. MASONRY PLATE SHALL BE CONNECTED TO SUBSTRUCTURE USING 4 COUNT 1½"ø F1554 GRADE 105 ANCHOR RODS AT TYPES 2 AND 4 BEARINGS. NUMBER AND SIZE OF ANCHOR RODS MAY BE REDUCED AT OTHER BEARINGS PER THE BEARING SUPPLIER'S DESIGNS. ANCHOR RODS SHALL EXTEND 18" MINIMUM BELOW TOP OF PIER OR TOP OF ABUTMENT SEAT.
3. CONTRACTOR SHALL ESTABLISH BEARING PLINTH ELEVATIONS BY DEDUCTING THE ACTUAL BEARING THICKNESS FROM THE TOP OF BEARING ELEVATIONS.
4. LENGTH AND SIZE OF WELD CONNECTING SOLE PLATE TO END BEAM SHALL BE PER THE BEARING SUPPLIER'S DESIGN.
5. ANCHOR RODS MAY BE INSTALLED USING BLOCKOUTS OR COUPLERS PER MANUFACTURER REQUIREMENTS.

CITY OF KIRKLAND
DEPARTMENT OF PUBLIC WORKS
123 FIFTH AVENUE KIRKLAND, WA 98033
(425) 587-3800 www.kirklandwa.gov

NO.	DATE	BY	APPR.	REVISION
0	2019/12/06	CHJS	MWBM	ISSUE FOR BID

MATTHEW D. BALGAMAN — STATE OF WASHINGTON — STRUCTURAL ENGINEER — PROFESSIONAL ENGINEER — 2019 DEC 06

COWI

SCVA DESIGNED BY:	2019/12/06 DATE
CHJS DRAWN BY:	2019/12/06 DATE
MWBM CHECKED BY:	2019/12/06 DATE

CITY OF KIRKLAND
TOTEM LAKE CONNECTION

BEARING DETAILS

SHEET: TLC–S–150
SCALE: AS SHOWN
FILENAME: A088367–S–150.dwg

File: D:\Projectwise\COWI\d0301252\A088367-S-150.dwg Save Date: Nov 26, 2019 1:23 PM Saved By: CHJS

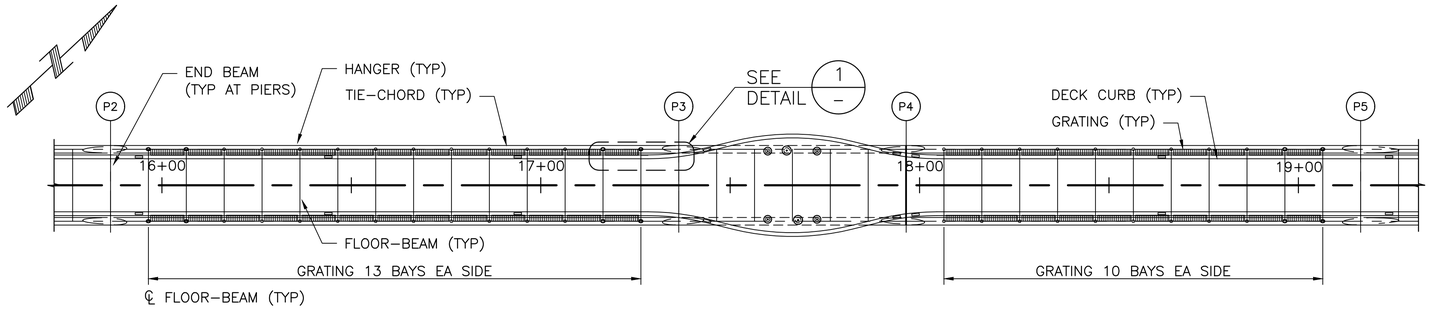

GRATING PLAN

SCALE: 1" = 20'
(ARCH NOT SHOWN FOR CLARITY)

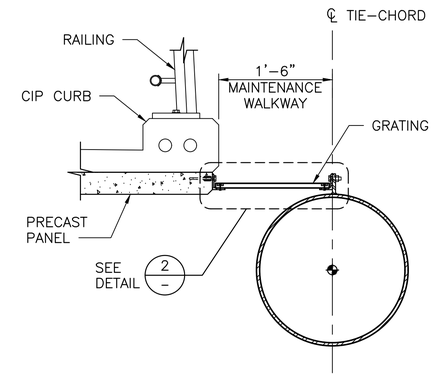

SECTION A

SCALE: 1" = 1'-0"

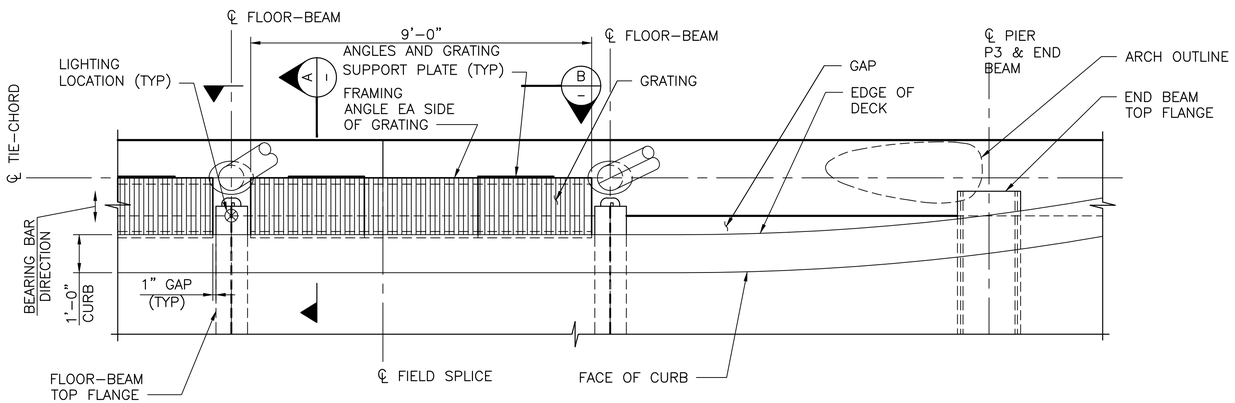

DETAIL 1

SCALE: ½" = 1'-0"
(ARCH NOT SHOWN FOR CLARITY)

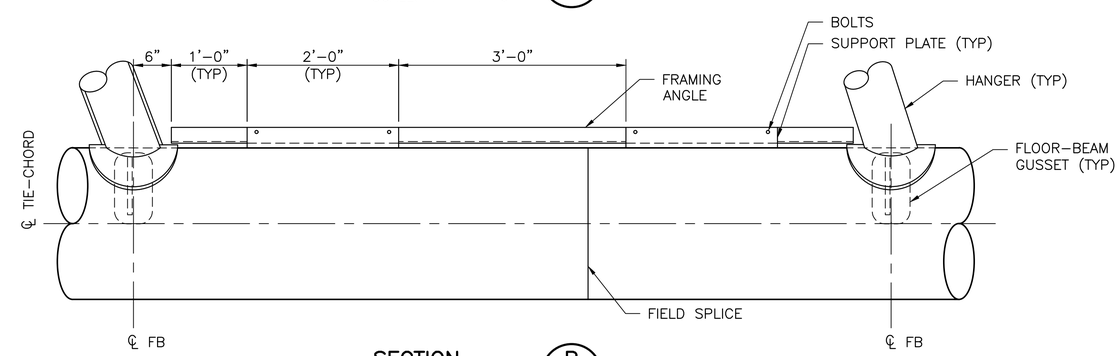

SECTION B

SCALE: 1" = 1'-0"

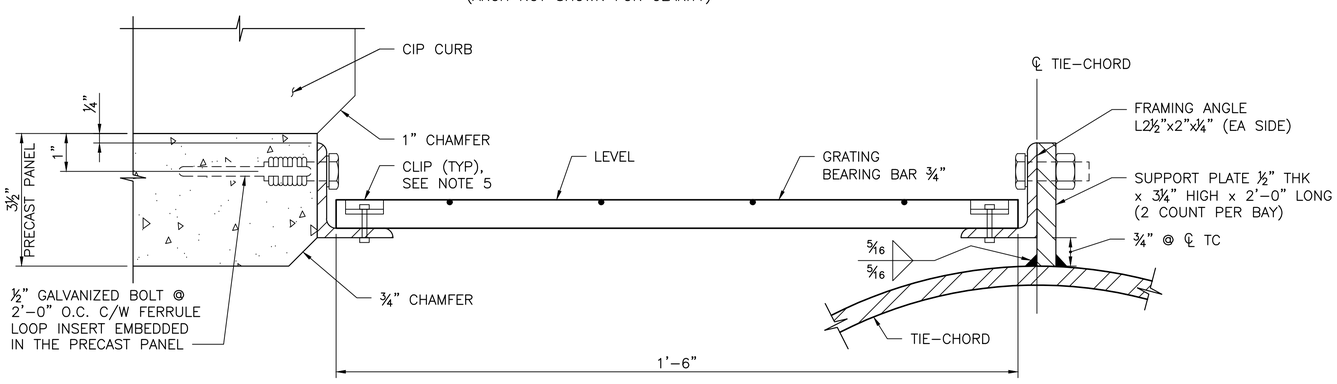

DETAIL 2

SCALE: 6" = 1'-0"

NOTES:

1. FOR GENERAL STRUCTURAL NOTES SEE DWG. TLS-S-101.
2. GRATING SHALL BE HOT DIPPED GALVANIZED WELDED BAR STEEL GRATING WITH ¾"x⅛" BEARING BARS 1 3/16" O.C.
3. GRATING SHALL BE CUT FROM 3 FOOT WIDE STANDARD GRATING WITH EXPOSED ENDS BRUSH PAINTED WITH GALVACON OR APPROVED EQUIVALENT.
4. FRAMING ANGLES AND SUPPORT PLATES SHALL BE PAINTED THE SAME DARK GRAY COLOR AS THE RAILING POSTS.
5. GRATING CLIPS AND BOLTS PER MANUFACTURER REQUIREMENTS.

CITY OF KIRKLAND
DEPARTMENT OF PUBLIC WORKS
123 FIFTH AVENUE KIRKLAND, WA 98033
(425) 587-3800 www.kirklandwa.gov

NO.	DATE	BY	APPR.	REVISION
0	2019/12/06	CHJS	MWBM	ISSUE FOR BID

MATTHEW D. BAUGHMAN — STATE OF WASHINGTON — 2019 DEC 06 — PROFESSIONAL ENGINEER

COWI

SCVA DESIGNED BY:	2019/12/06 DATE
CHJS DRAWN BY:	2019/12/06 DATE
MWBM CHECKED BY:	2019/12/06 DATE

CITY OF KIRKLAND
TOTEM LAKE CONNECTION

MAINTENANCE WALKWAY

SHEET: TLC-S-151
SCALE: AS SHOWN
FILENAME: A088367-S-151.dwg

File: D:\Projectwise\COWI\dt301252\A088367-S-151.dwg Save Date: Nov 26, 2019 1:23 PM Saved By: CHJS

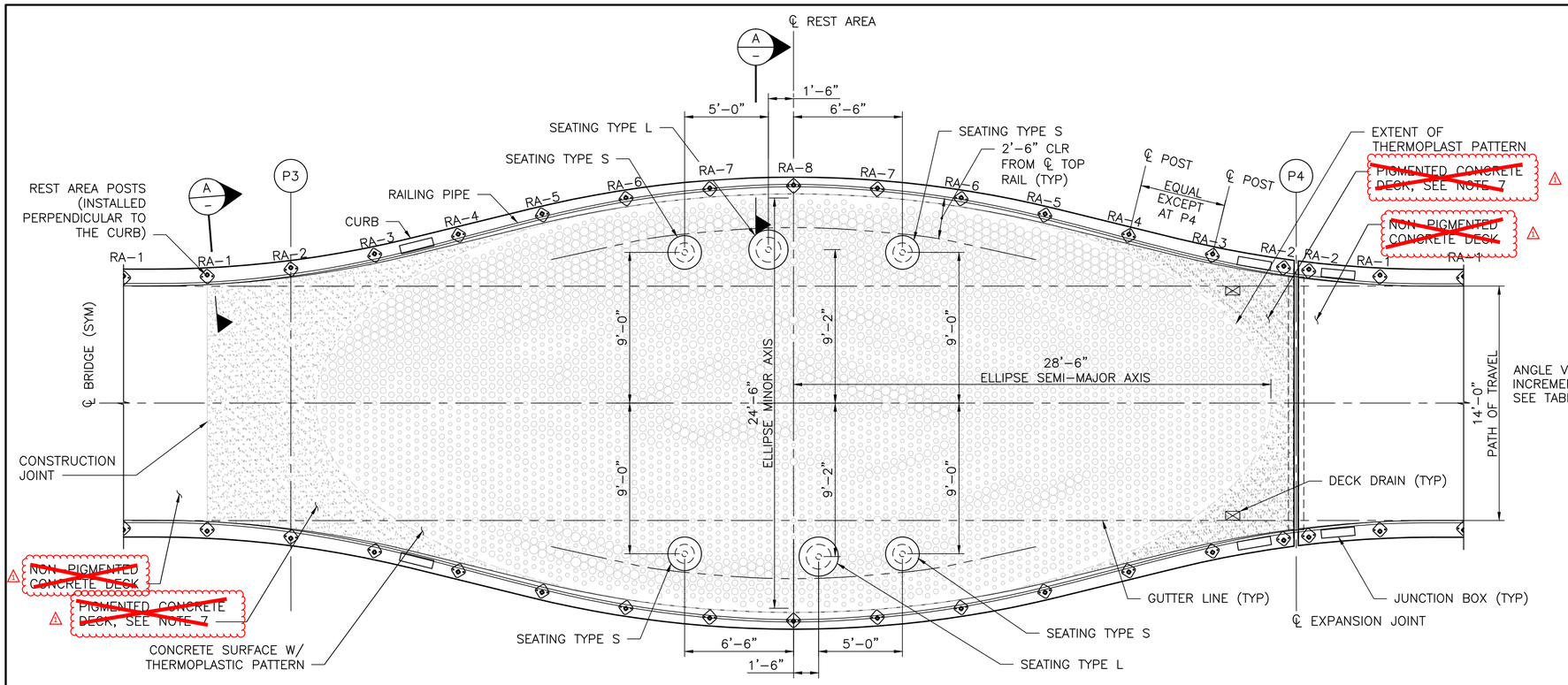

REST AREA DETAIL (4 / 155)

SCALE: ¼" = 1'–0"

*** NOTE:**

SEE TYPICAL RAILING SECTION ON SHEET TLC–A–155 FOR DETAILS.

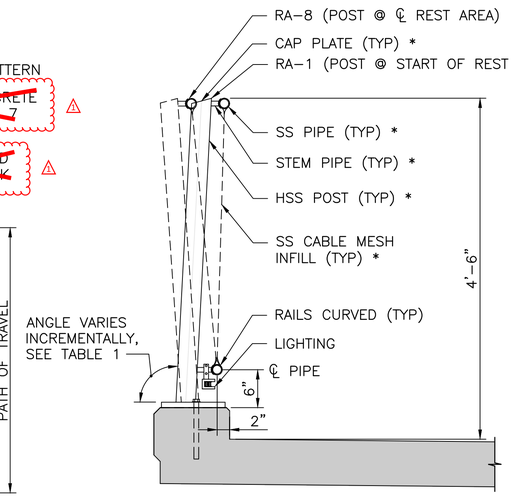

TLC–A–152 TABLE 1: POST ANGLE		
POST ID	COUNT	ANGLE
RA–1	4	93°
RA–2	6	92°
RA–3	4	91°
RA–4	4	90°
RA–5	4	89°
RA–6	4	88°
RA–7	4	87°
RA–8	2	86°

SECTION (A / –)

SCALE: 1" = 1'–0"

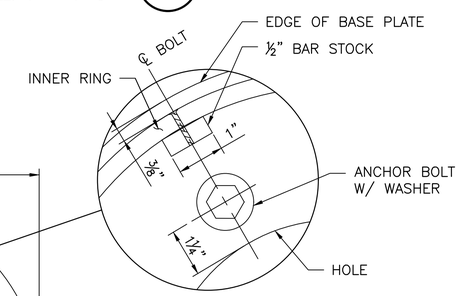

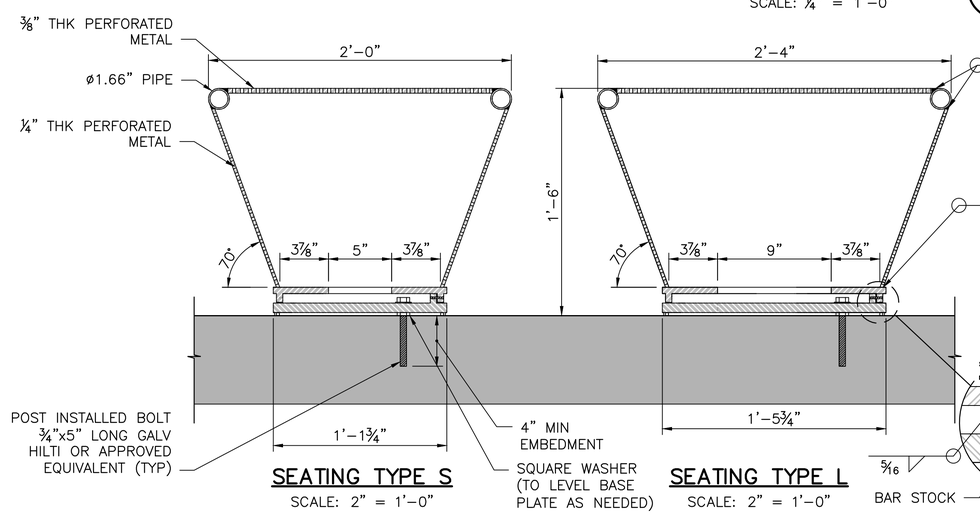

SEATING TYPE S

SCALE: 2" = 1'–0"

SEATING TYPE L

SCALE: 2" = 1'–0"

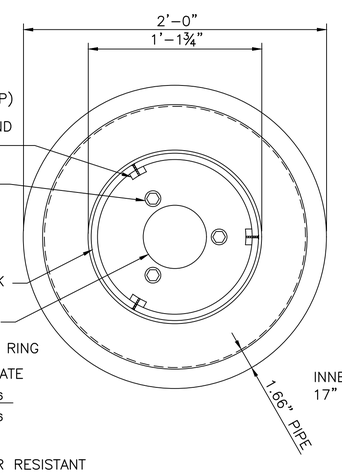

TYPE S – PLAN

SCALE: 2" = 1'–0"

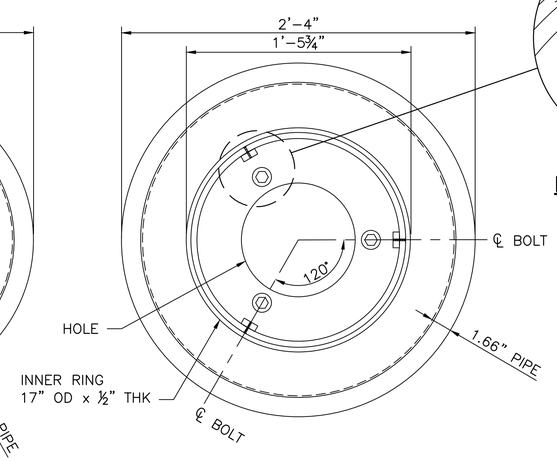

TYPE L – PLAN

SCALE: 2" = 1'–0"

NOTES:

1. FOR GENERAL STRUCTURAL NOTES, SEE DWG TLC–S–101.
2. SEATING SHALL BE FABRICATED OF PERFORATED SHEET METAL WITH 40% OPENING DENSITY.
3. SHOP ASSEMBLED SEATING SHALL BE PAINTED ACCORDING TO SECTION 6–07 OF THE SPECIAL PROVISIONS.
4. ALL TAMPER RESISTANT BOLTS SHALL BE STAINLESS STEEL.
5. ALL ENLARGED DETAILS ARE AT 6"=1'–0".
6. CONTRACTOR TO CONFIRM BENCH FABRICATION DETAILS.
7. ~~SPAN 3 CIP CONCRETE MIX SHALL BE PIGMENTED BLUE PER SPECIAL PROVISIONS. SOFFIT AND CURB FACES SHALL BE STAINED GRAY PER SPECIAL PROVISIONS.~~

CITY OF KIRKLAND
DEPARTMENT OF PUBLIC WORKS
123 FIFTH AVENUE KIRKLAND, WA 98033
(425) 587-3800 www.kirklandwa.gov

NO.	DATE	BY	APPR.	REVISION
1	2020/08/14	MWBM	EB	REVISED FOR RE-BID
0	2019/12/06	SM	EB	ISSUE FOR BID

7693 REGISTERED ARCHITECT Steven McDonald STATE OF WASHINGTON

COWI VIA

E. BIRKHAUSER	2019/12/06	DESIGNED BY: DATE
C. JENSEN	2019/12/06	DRAWN BY: DATE
G. BALL	2019/12/06	CHECKED BY: DATE

CITY OF KIRKLAND
TOTEM LAKE CONNECTION

REST AREA

SHEET: TLC–A–152
SCALE: AS SHOWN
FILENAME: A088367–A–153–157.dwg

File: D:\projectwise\cowi\a0301252\A088367-A-153-157.dwg Save Date: Oct 31, 2019 2:42 PM Saved By: CHJS

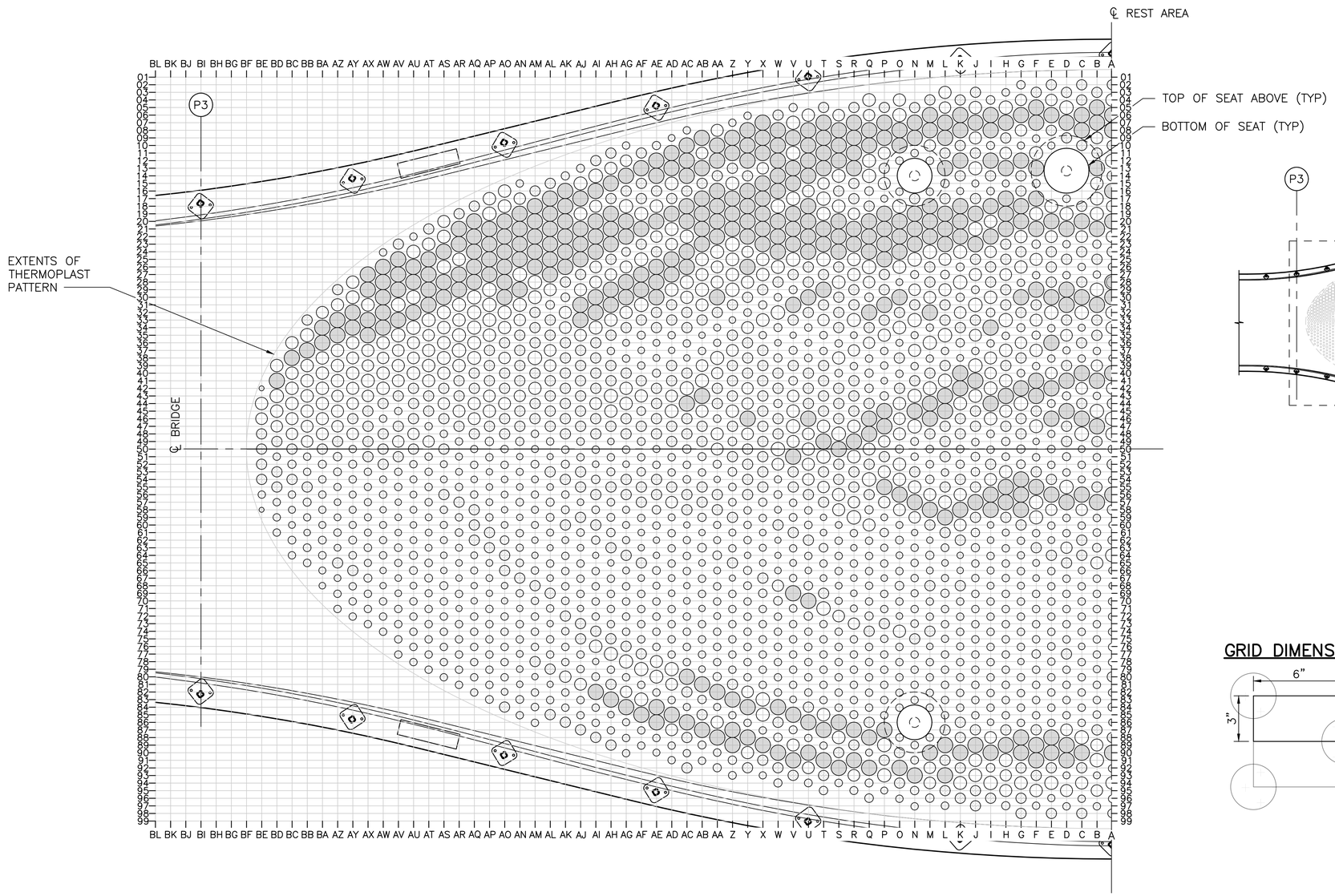

REST AREA PAVING PLAN – WEST

SCALE: ½" = 1'–0"

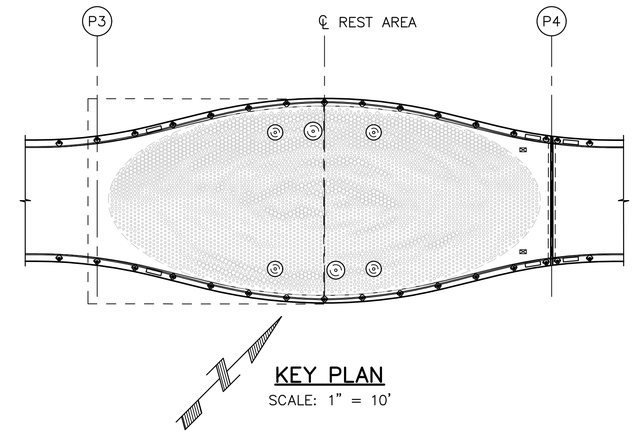

KEY PLAN

SCALE: 1" = 10'

GRID DIMENSIONS:

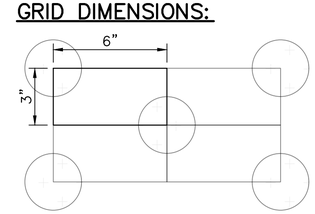

LEGEND:

- R0'–1½"
- R0'–2"
- R0'–2½"
- R0'–3"

NOTES:

1. FOR GENERAL STRUCTURAL NOTES, SEE DWG TLC–S–101.
2. THERMOPLASTIC PATTERN MAY BE PRECUT FROM SHEETS AND APPLIED TO DECK.
3. FOR INFORMATION REGARDING APPLICATION OF THERMOPLASTIC APPLICATION, SEE SPECIAL PROVISIONS.
4. THERMOPLASTIC POSITIVE CIRCLES TO BE WHITE AND BACKGROUND VOID TO BE ROYAL BLUE.

CITY OF KIRKLAND
DEPARTMENT OF PUBLIC WORKS
123 FIFTH AVENUE KIRKLAND, WA 98033
(425) 587-3800 www.kirklandwa.gov

NO.	DATE	BY	APPR.	REVISION
1	2020/08/14	MWBM	EB	REVISED FOR RE-BID
0	2019/12/06	SM	EB	ISSUE FOR BID

7693 REGISTERED ARCHITECT
Steven McDonald
STATE OF WASHINGTON

COWI
VIA

E. BIRKHAUSER	DESIGNED BY:	2019/12/06 DATE
C. JENSEN	DRAWN BY:	2019/12/06 DATE
G. BALL	CHECKED BY:	2019/12/06 DATE

CITY OF KIRKLAND
TOTEM LAKE CONNECTION

REST AREA PAVING PLAN – SHEET 1

SHEET: TLC–A–153
SCALE: AS SHOWN
FILENAME: A088367–A–153–157.dwg

File: D:\projectwise\cowi\d0301252\A088367-A-153-157.dwg Save Date: Oct 31, 2019 2:42 PM Saved By: CHJS

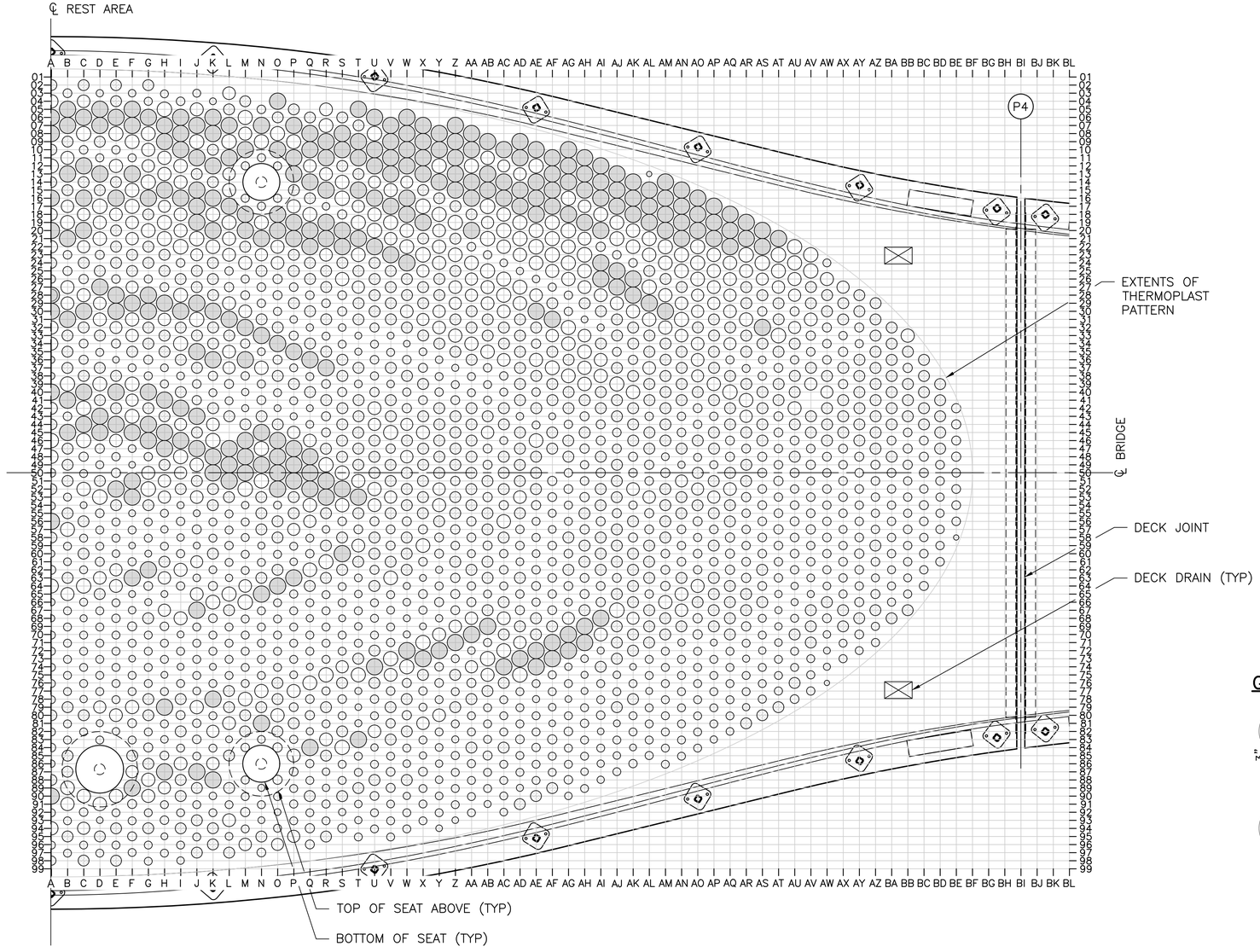

REST AREA PAVING PLAN – EAST

SCALE: ½" = 1'–0"

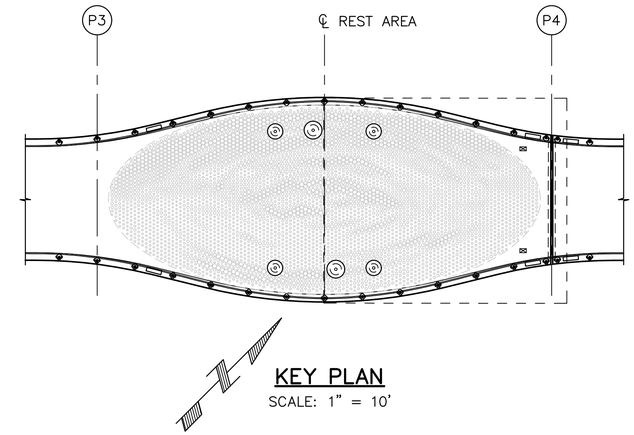

KEY PLAN

SCALE: 1" = 10'

GRID DIMENSIONS:

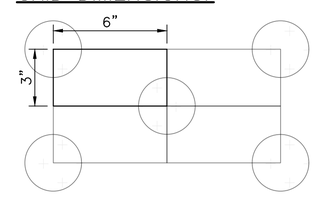

LEGEND:

- R0'–1½"
- R0'–2"
- R0'–2½"
- R0'–3"

NOTES:

1. FOR GENERAL STRUCTURAL NOTES, SEE DWG TLC–S–101.
2. THERMOPLASTIC PATTERN MAY BE PRECUT FROM SHEETS AND APPLIED TO DECK.
3. FOR INFORMATION REGARDING APPLICATION OF THERMOPLASTIC APPLICATION, SEE SPECIAL PROVISIONS.
4. THERMOPLASTIC POSITIVE CIRCLES TO BE WHITE AND BACKGROUND VOID TO BE ROYAL BLUE.

CITY OF KIRKLAND
DEPARTMENT OF PUBLIC WORKS
123 FIFTH AVENUE KIRKLAND, WA 98033
(425) 587-3800 www.kirklandwa.gov

NO.	DATE	BY	APPR.	REVISION
1	2020/08/14	MWBM	EB	REVISED FOR RE-BID
0	2019/12/06	SM	EB	ISSUE FOR BID

7693 REGISTERED ARCHITECT Steven McDonald STATE OF WASHINGTON

COWI VIA

E. BIRKHAUSER	2019/12/06	DESIGNED BY: DATE
C. JENSEN	2019/12/06	DRAWN BY: DATE
G. BALL	2019/12/06	CHECKED BY: DATE

CITY OF KIRKLAND
TOTEM LAKE CONNECTION

REST AREA PAVING PLAN – SHEET 2

SHEET: TLC–A–154
SCALE: AS SHOWN
FILENAME: A088367–A–153–157.dwg

File: D:\projectwise\cow\\0301252\A088367-A-153-157.dwg Save Date: Oct 31, 2019 2:42 PM Saved By: CHJS

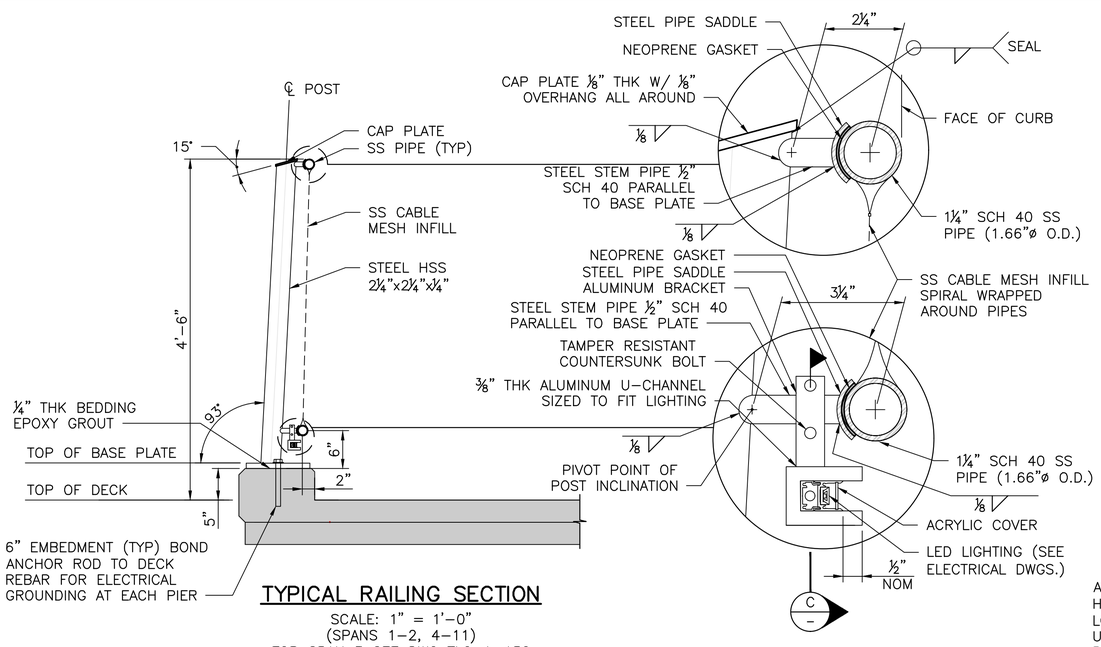

TYPICAL RAILING SECTION

SCALE: 1" = 1'-0"
(SPANS 1–2, 4–11)
FOR SPAN 3 SEE DWG TLC-A-152

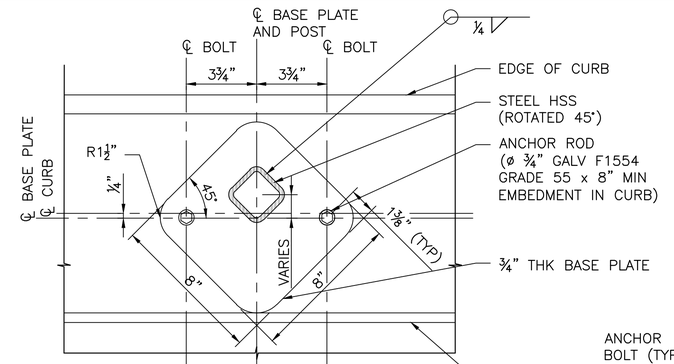

RAILING BASE PLATE ON STRUCTURE

SCALE: 3" = 1'-0"

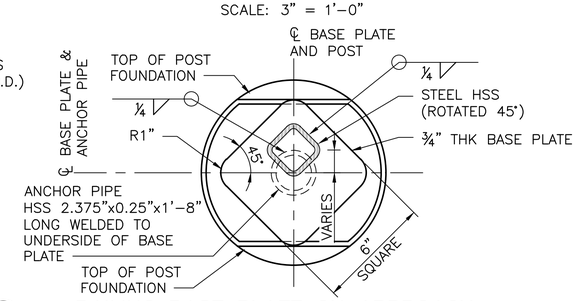

RAILING BASE PLATE ON APPROACH

SCALE: 3" = 1'-0"

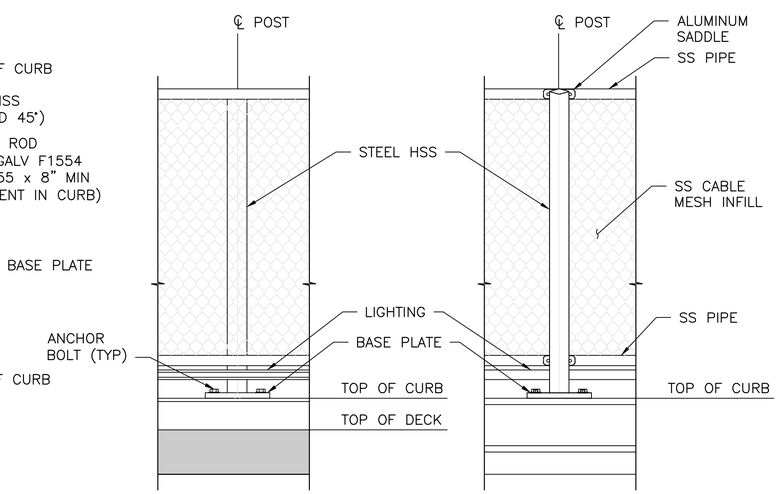

INSIDE VIEW (B)

SCALE: 1" = 1'-0"

OUTSIDE VIEW (A)

SCALE: 1" = 1'-0"

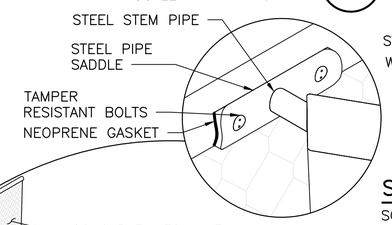

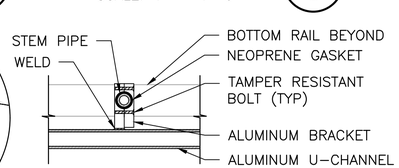

SECTION (C)

SCALE: 3" = 1'-0"

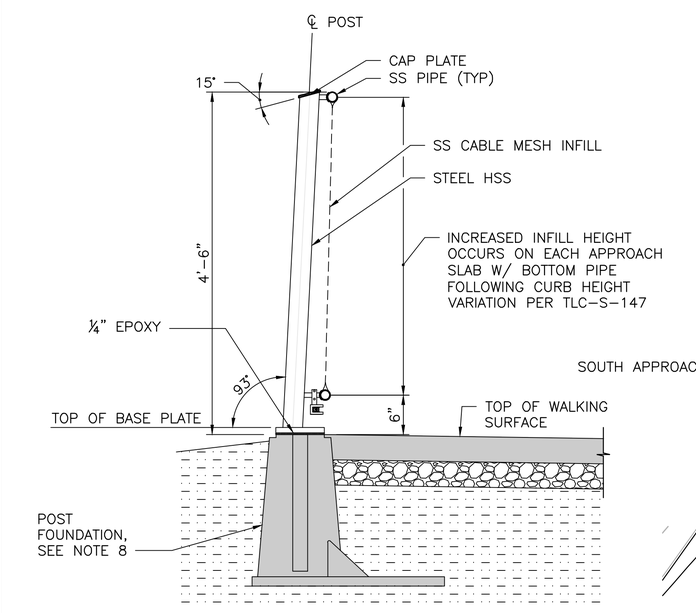

RAILING ON APPROACH SECTION

SCALE: 1" = 1'-0"

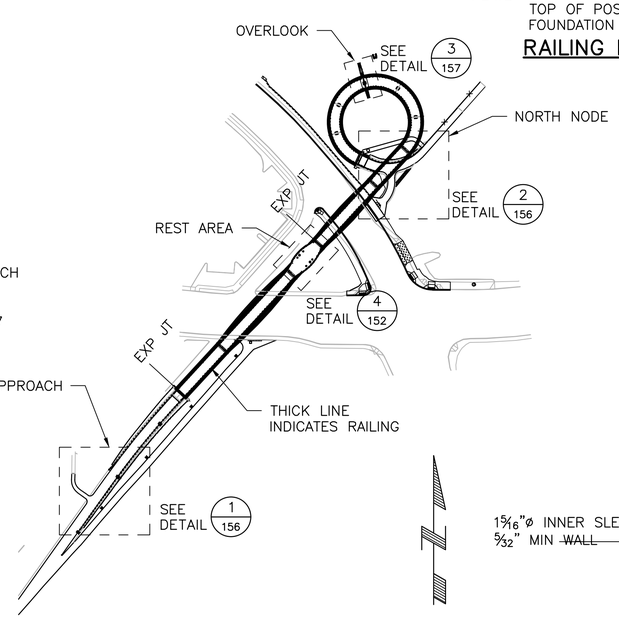

RAILING KEY PLAN

SCALE: N.T.S.

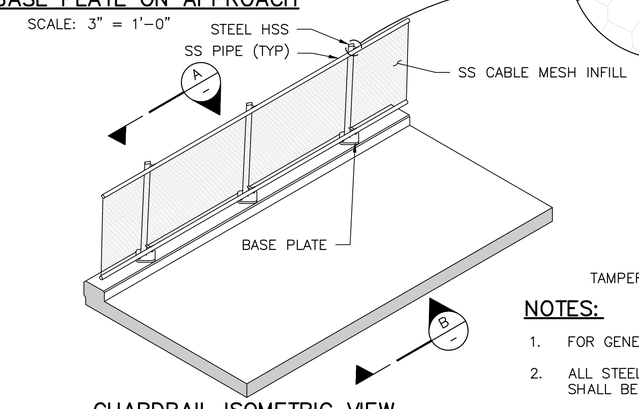

GUARDRAIL ISOMETRIC VIEW

SCALE: N.T.S.
(LIGHTING NOT SHOWN)

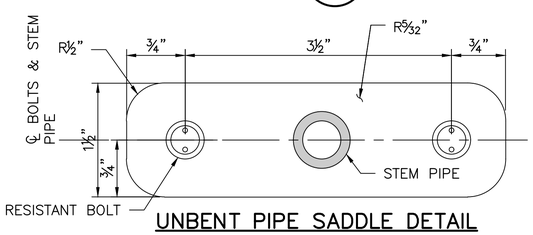

UNBENT PIPE SADDLE DETAIL

SCALE: 1:1

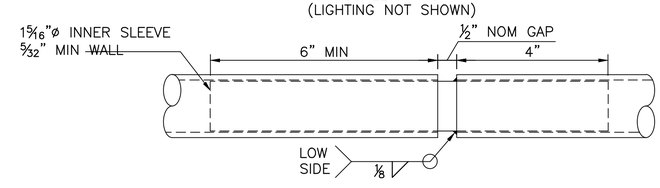

RAILING PIPE SPLICE DETAIL

SCALE: 6" = 1'-0"

NOTES:

1. FOR GENERAL STRUCTURAL NOTES, SEE DWG TLC-S-101.
2. ALL STEEL POSTS, BASE PLATES, CAP PLATES, STEM PIPES AND SADDLES SHALL BE PAINTED. ALL ALUMINUM BRACKETS AND CHANNELS TO BE PAINTED.
3. STAINLESS STEEL PIPES TO HAVE A BRUSHED FINISH AND SHALL BE CURVED TO FOLLOW FACE OF CURB, UNO.
4. ALL TAMPER RESISTANT BOLTS SHALL BE STAINLESS STEEL.
5. ALL ENLARGED DETAILS ARE AT SCALE: 6" = 1'-0".
6. POSTS ON BRIDGE ARE COINCIDENT WITH FLOOR-BEAM/END-BEAM CENTERLINE EXCEPT AT EXPANSION JOINTS, OVERLOOK, OR OTHERWISE STATED. INTERMEDIATE POSTS ARE CENTERED BETWEEN BEAMS.
7. STAINLESS STEEL CABLE MESH INFILL SHALL BE CARL STAHL X-TEND OR APPROVED EQUIVALENT.
8. POST FOUNDATION SHALL BE SLEEVE-IT BY STRATA FILLED WITH CONCRETE CLASS 3000, OR APPROVED EQUIVALENT.

CITY OF KIRKLAND
DEPARTMENT OF PUBLIC WORKS
123 FIFTH AVENUE KIRKLAND, WA 98033
(425) 587-3800 www.kirklandwa.gov

NO.	DATE	BY	APPR.	REVISION
0	2019/12/06	SM	EB	ISSUE FOR BID

7693 REGISTERED ARCHITECT
Steven McDonald
STATE OF WASHINGTON

COWI
VIA

E. BIRKHAUSER	2019/12/06
DESIGNED BY:	DATE
C. JENSEN	2019/12/06
DRAWN BY:	DATE
G. BALL	2019/12/06
CHECKED BY:	DATE

CITY OF KIRKLAND
TOTEM LAKE CONNECTION

TYPICAL RAILING

SHEET: TLC-A-155
SCALE: AS SHOWN
FILENAME: A088367-A-153-157.dwg

File: D:\projectwise\cow\d0301252\A088367-A-153-157.dwg Save Date: Nov 04, 2019 12:44 PM Saved By: CHJS

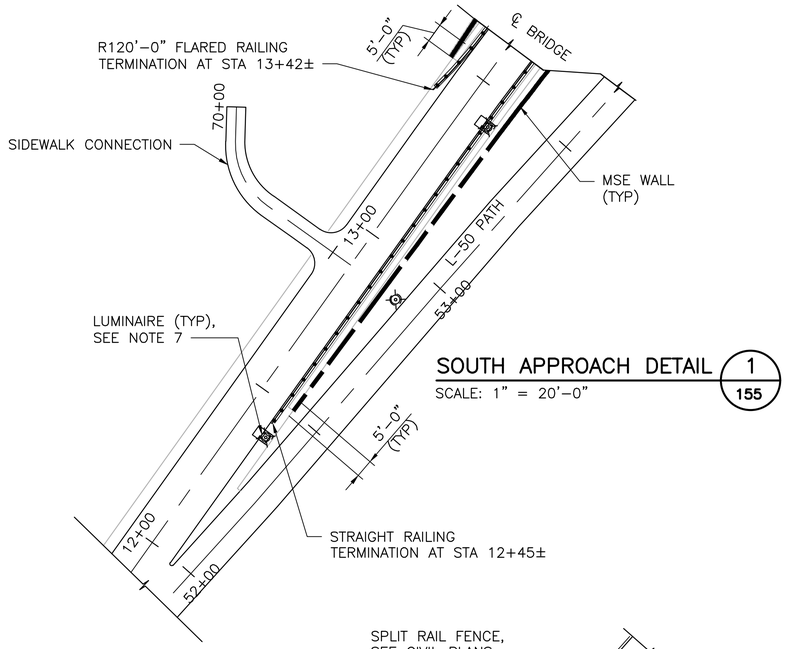

SOUTH APPROACH DETAIL (1/155)

SCALE: 1" = 20'-0"

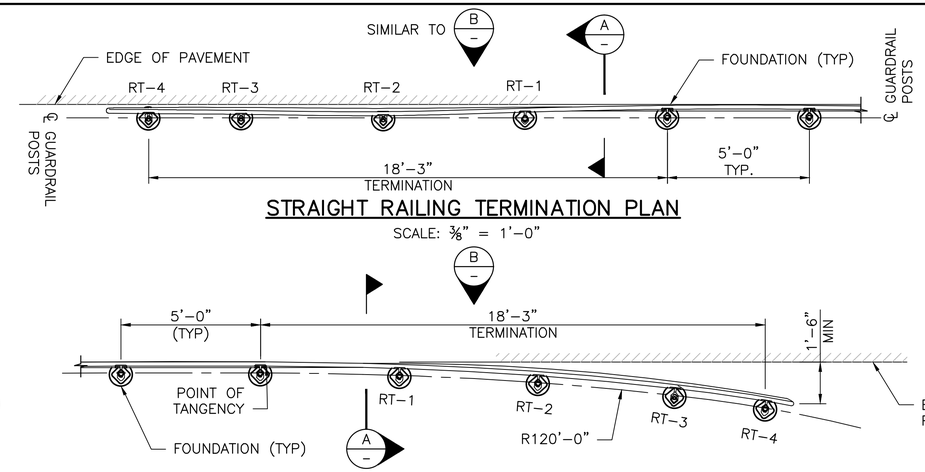

STRAIGHT RAILING TERMINATION PLAN

SCALE: 3/8" = 1'-0"

FLARED RAILING TERMINATION PLAN

SCALE: 3/8" = 1'-0"
(CURVATURE OF TRAIL NOT REPRESENTED)

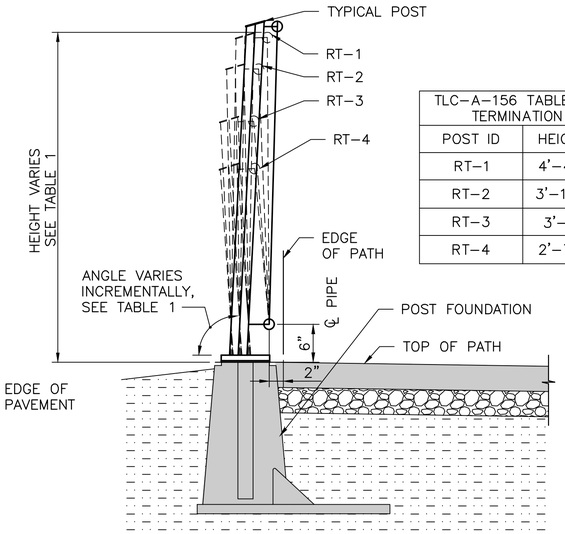

TLC-A-156 TABLE 1: RAILING TERMINATION POSTS		
POST ID	HEIGHT	ANGLE
RT-1	4'-4¼"	91°
RT-2	3'-11¼"	89°
RT-3	3'-3"	87°
RT-4	2'-7½"	86°

SECTION (A/–)

SCALE: 1" = 1'-0"

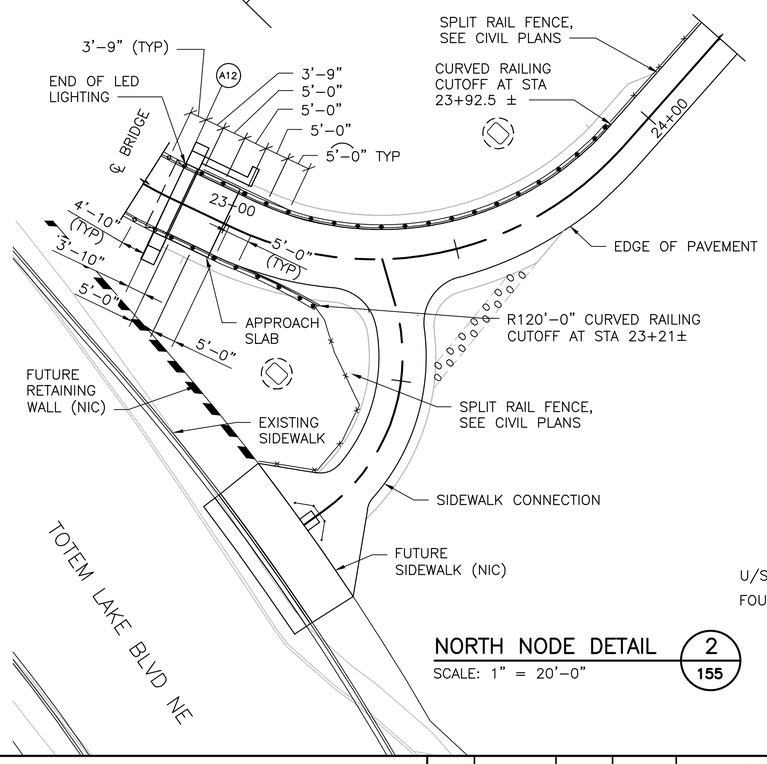

NORTH NODE DETAIL (2/155)

SCALE: 1" = 20'-0"

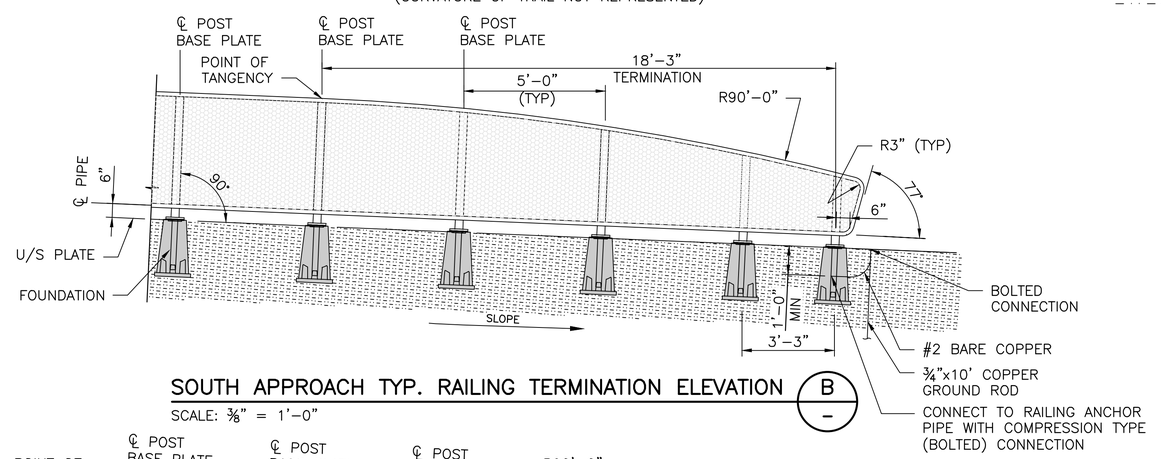

SOUTH APPROACH TYP. RAILING TERMINATION ELEVATION (B/–)

SCALE: 3/8" = 1'-0"

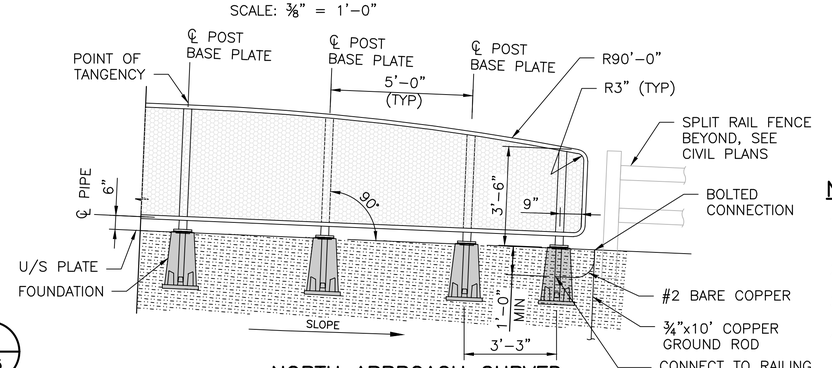

NORTH APPROACH CURVED RAILING CUTOFF DETAIL

SCALE: 3/8" = 1'-0"

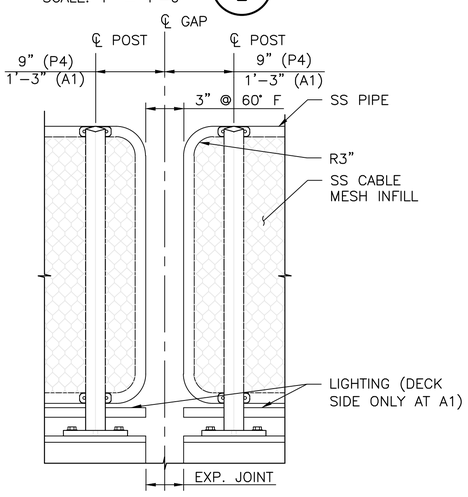

EXPANSION JOINT DETAIL

SCALE: 1" = 1'-0"

NOTES:

1. FOR GENERAL STRUCTURAL NOTES, SEE DWG TLC-S-101.
2. SEE NOTES ON DWG TLC-A-155.
3. ALL ENLARGED DETAILS ARE AT SCALE: 2" = 1'-0".
4. RAILING PIPE SHALL BE CURVED (NOT CHORDED) THROUGHOUT.
5. RAILING PIPE SPLICES LOCATED BY FABRICATOR AS REQUIRED WITH MIN DISTANCE BETWEEN SPLICES OF 20-FT.
6. FABRICATOR SHALL FINALIZE RAILING TERMINATION GEOMETRY FOR APPROVAL BY ENGINEER.
7. FOR LUMINAIRE LOCATIONS, SEE DWG TLC-S-105 AND ELECTRICAL DWGS. AVOID CONFLICT BETWEEN LUMINAIRE AND RAILING FOUNDATIONS; ADJUST AS REQUIRED.

CITY OF KIRKLAND
DEPARTMENT OF PUBLIC WORKS
123 FIFTH AVENUE KIRKLAND, WA 98033
(425) 587-3800 www.kirklandwa.gov

NO.	DATE	BY	APPR.	REVISION
0	2019/12/06	SM	EB	ISSUE FOR BID

7693 REGISTERED ARCHITECT Steven McDonald STATE OF WASHINGTON

COWI VIA

E. BIRKHAUSER 2019/12/06 DESIGNED BY: DATE
C. JENSEN 2019/12/06 DRAWN BY: DATE
G. BALL 2019/12/06 CHECKED BY: DATE

CITY OF KIRKLAND
TOTEM LAKE CONNECTION

RAILING TERMINATION

SHEET: TLC-A-156
SCALE: AS SHOWN
FILENAME: A088367-A-153-157.dwg

File: D:\projectwise\cowi\d0301252\A088367-A-153-157.dwg Save Date: Nov 12, 2019 1:42 PM Saved By: CHJS

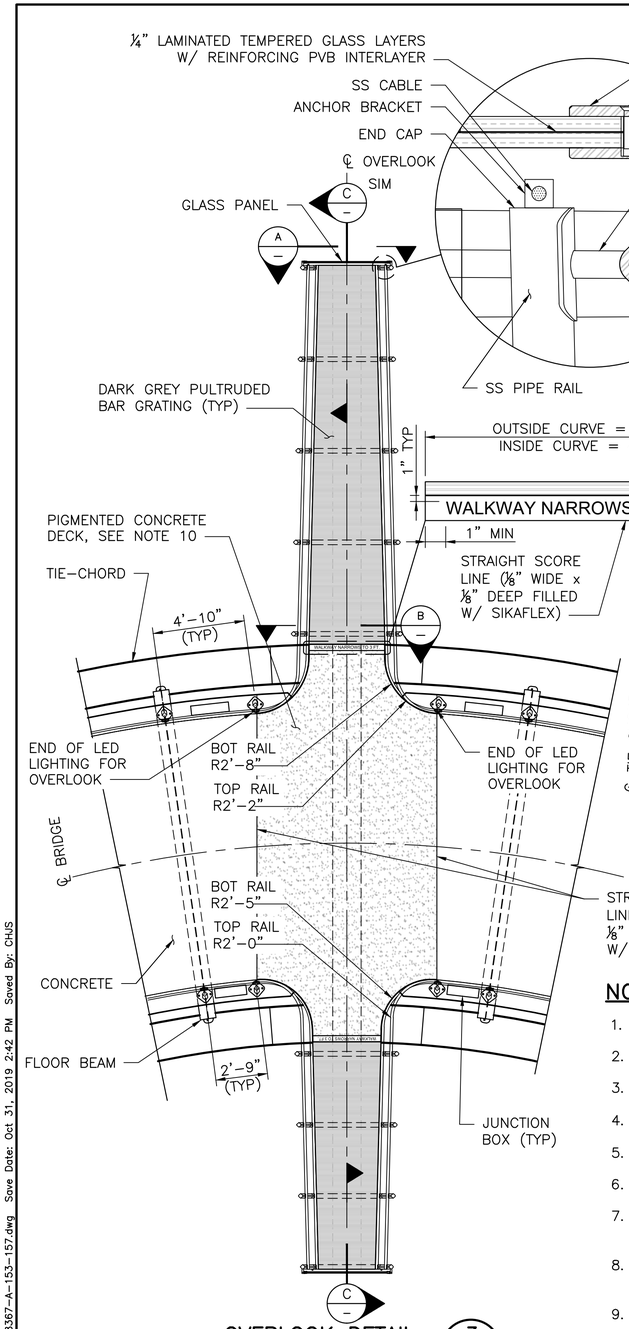

OVERLOOK DETAIL 3/155

SCALE: ¼" = 1'-0"

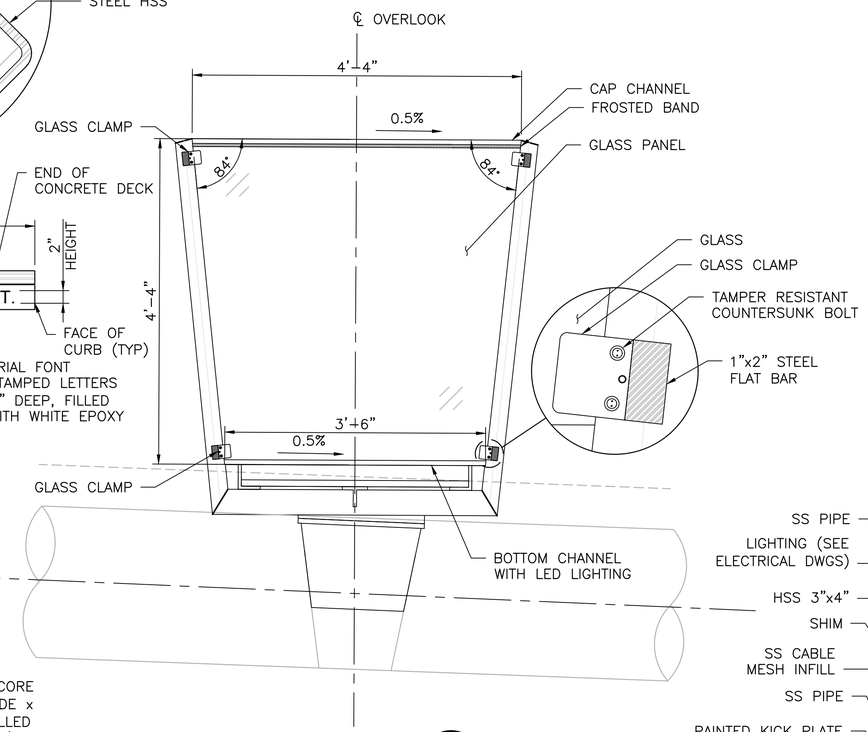

ELEVATION A/–

SCALE: 1" = 1'-0"

* NOTE:

SEE TYPICAL RAILING SECTION ON SHEET TLC-A-155 FOR DETAILS.

NOTES:

1. FOR GENERAL STRUCTURAL NOTES, SEE DWG TLC-S-101.
2. FOR FRAMING DETAILS SEE DWG TLC-S-140.
3. SEE NOTES ON DWG TLC-S-152.
4. ALL ENLARGED DETAILS ARE AT SCALE: 2" = 1'-0".
5. ALL STEEL TO BE PAINTED.
6. ALL TAMPER RESISTANT BOLTS SHALL BE STAINLESS STEEL.
7. SEE DWG TLC-A-155 FOR TYPICAL RAILING DETAILS NOT SHOWN.
8. SS CABLE ANCHORAGE FOR INFILL SHALL BE ⅜"ø MIN PER MANUFACTURER'S REQUIREMENTS C/W HARDWARE.
9. FOR STRUCTURAL STEEL FRAMING AND GRATING DETAILS SEE DWG TLC-S-141.
10. CIP CONCRETE MIX SHALL BE PIGMENTED DARK GRAY PER SPECIAL PROVISIONS.

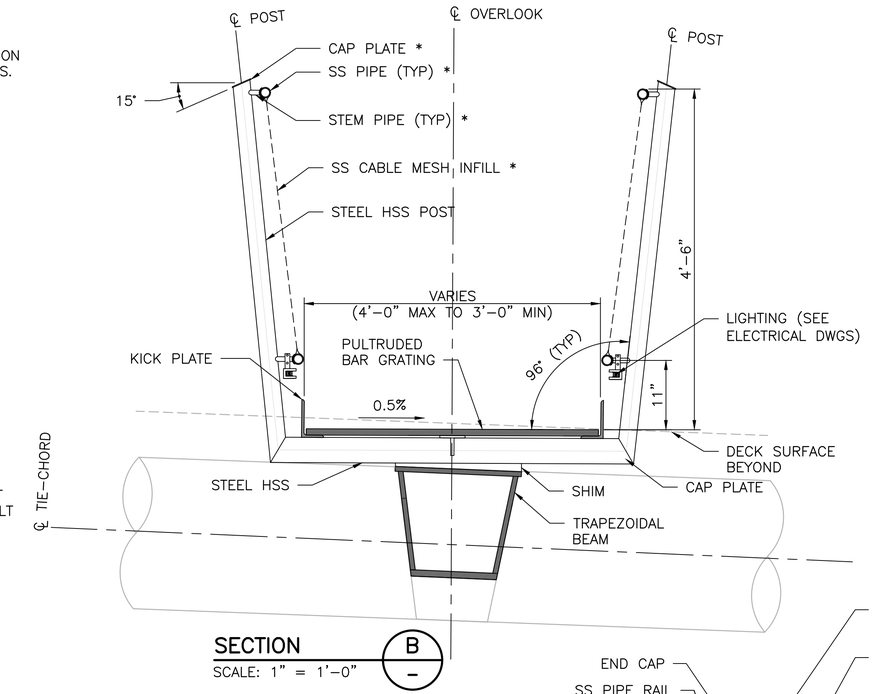

SECTION B/–

SCALE: 1" = 1'-0"

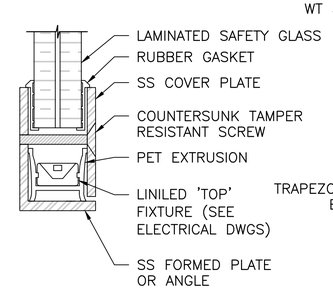

BOTTOM CHANNEL LIGHTING DETAIL

SCALE: 1" = 1'-0"

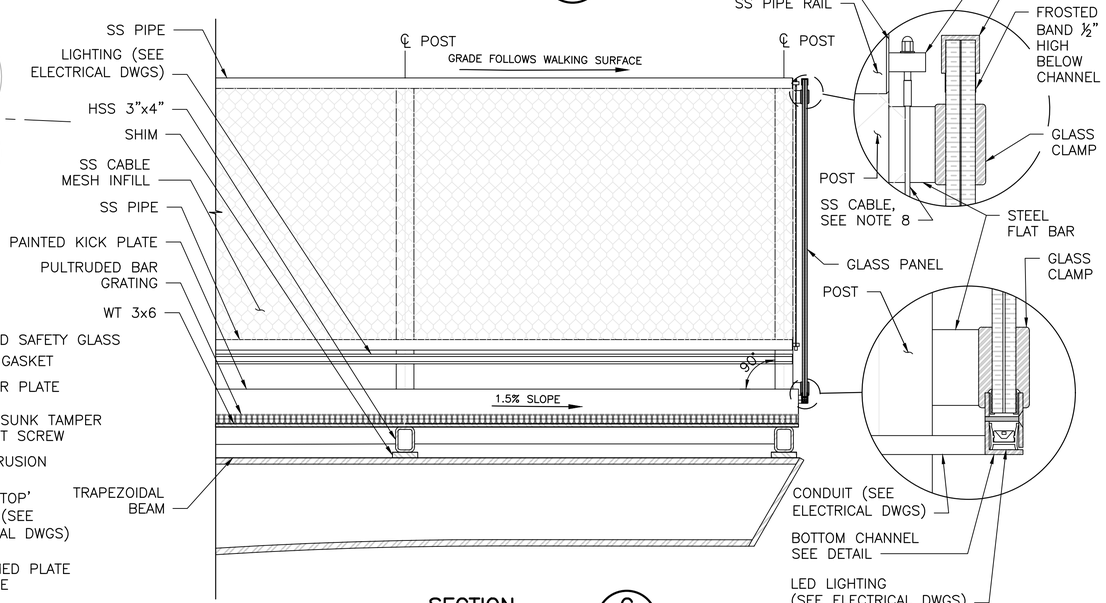

SECTION C/–

SCALE: 1" = 1'-0"

CITY OF KIRKLAND
DEPARTMENT OF PUBLIC WORKS
123 FIFTH AVENUE KIRKLAND, WA 98033
(425) 587-3800 www.kirklandwa.gov

NO.	DATE	BY	APPR.	REVISION
0	2019/12/06	SM	EB	ISSUE FOR BID

7693 REGISTERED ARCHITECT Steven McDonald STATE OF WASHINGTON

COWI VIA

E. BIRKHAUSER 2019/12/06 DESIGNED BY: DATE
C. JENSEN 2019/12/06 DRAWN BY: DATE
G. BALL 2019/12/06 CHECKED BY: DATE

CITY OF KIRKLAND
TOTEM LAKE CONNECTION

OVERLOOK

SHEET: TLC-A-157
SCALE: AS SHOWN
FILENAME: A088367-A-153-157.dwg

File: D:\projectwise\cowi\d0301252\A088367-A-153-157.dwg Save Date: Oct 31, 2019 2:42 PM Saved By: CHJS

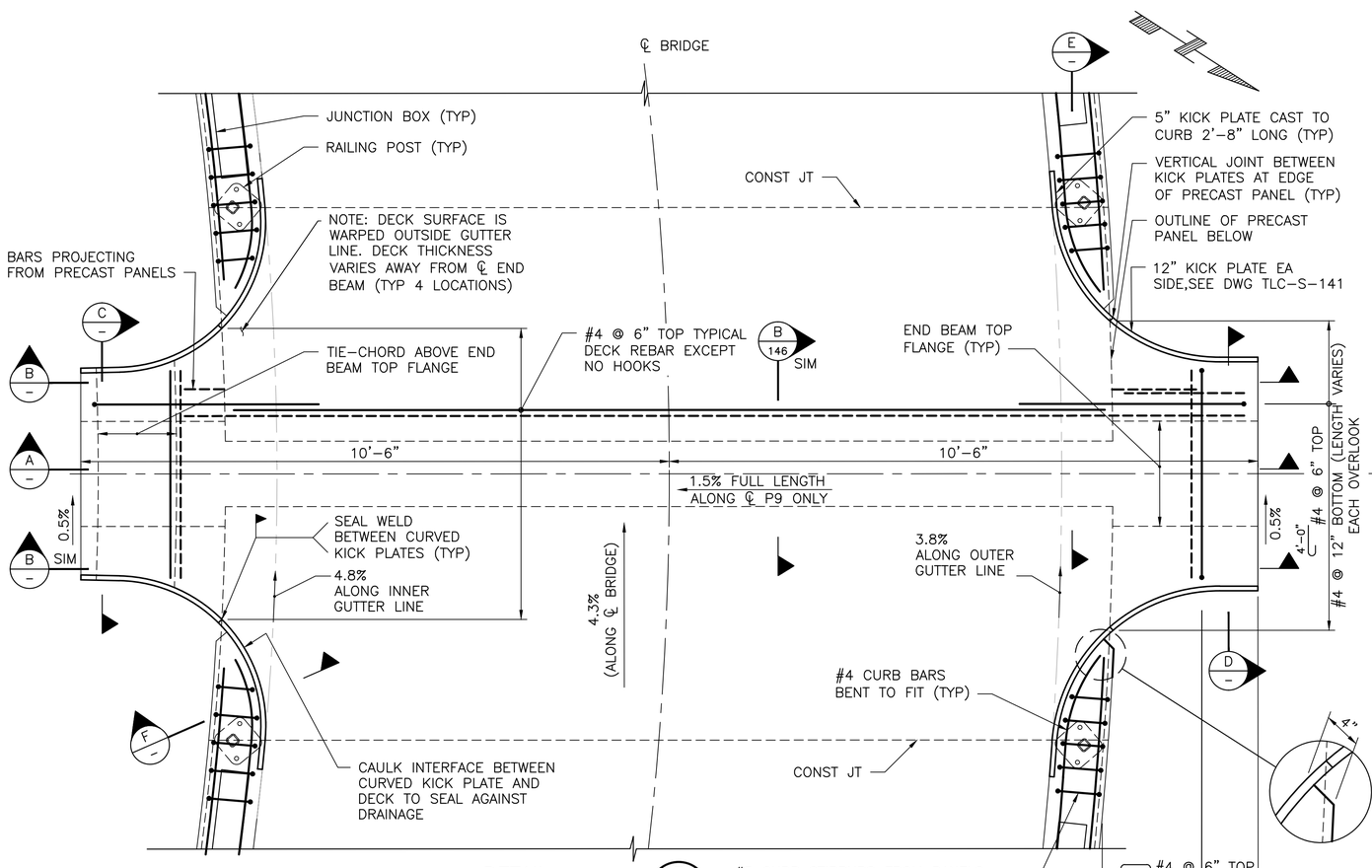

DETAIL 5/146

SCALE: ¾" = 1'-0"
(TYPICAL DECK REBAR NOT SHOWN FOR CLARITY)

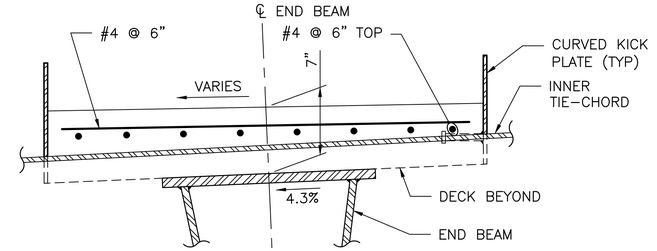

SECTION C

SCALE: 1½" = 1'-0"

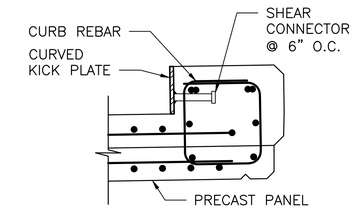

SECTION F

SCALE: 1½" = 1'-0"

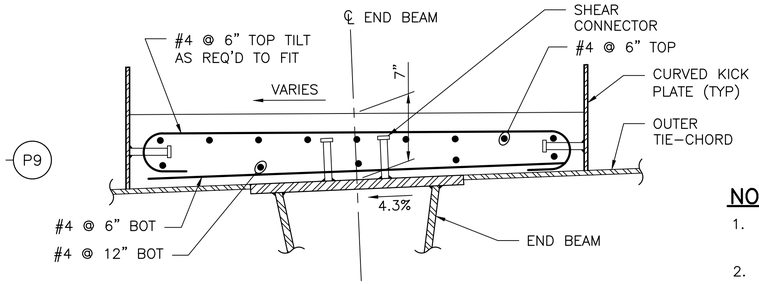

SECTION D

SCALE: 1½" = 1'-0"

NOTES:

1. FOR GENERAL STRUCTURAL NOTES SEE DWG TLC-S-101.
2. SEE DWG TLC-S-145 FOR CURB REINFORCEMENT.
3. CURVED KICK PLATE SHALL BE PAINTED TO MATCH TIE-CHORDS.

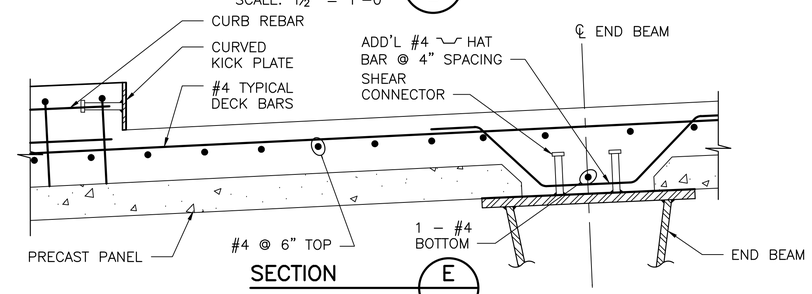

SECTION E

SCALE: 1½" = 1'-0"

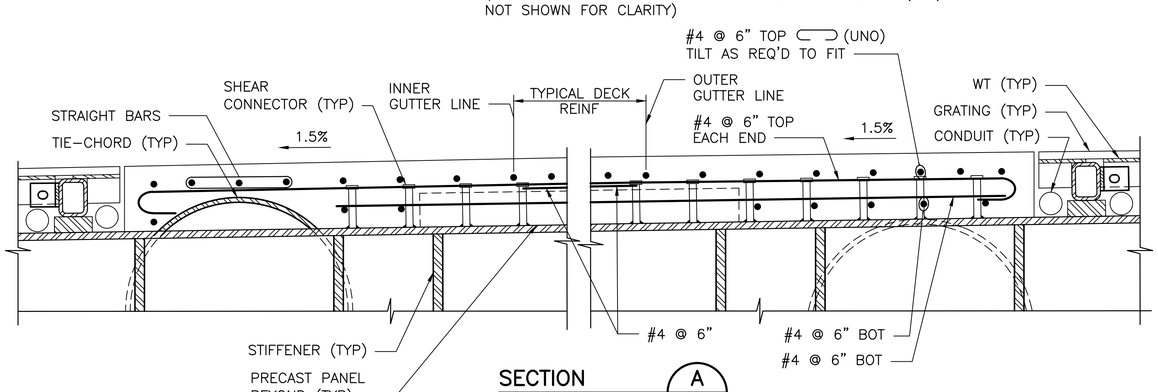

SECTION A

SCALE: 1½" = 1'-0"

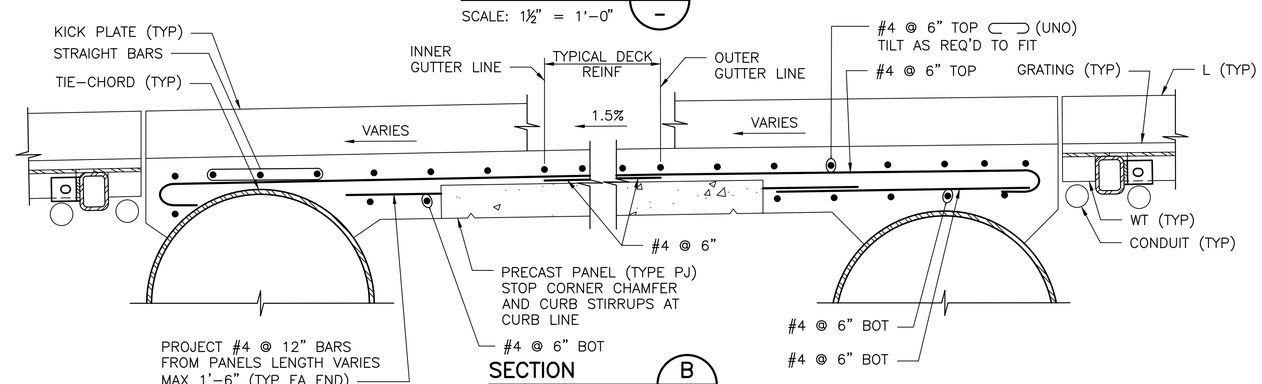

SECTION B

SCALE: 1½" = 1'-0"

File: D:\Projectwise\COW\d0301252\A088367-S-158.dwg Save Date: Oct 31, 2019 11:32 AM Saved By: CHJS

CITY OF KIRKLAND
DEPARTMENT OF PUBLIC WORKS
123 FIFTH AVENUE KIRKLAND, WA 98033
(425) 587-3800 www.kirklandwa.gov

NO.	DATE	BY	APPR.	REVISION
0	2019/12/06	CHJS	MWBM	ISSUE FOR BID

MATTHEW D. BAUGHMAN — STATE OF WASHINGTON — 2019 DEC 06 — PROFESSIONAL ENGINEER

COWI

SCVA	2019/12/06
DESIGNED BY:	DATE
CHJS	2019/12/06
DRAWN BY:	DATE
MWBM	2019/12/06
CHECKED BY:	DATE

CITY OF KIRKLAND
TOTEM LAKE CONNECTION

OVERLOOK – CIP OVERLAY

SHEET: TLC-S-158
SCALE: AS SHOWN
FILENAME: A088367-S-158.dwg

SUGGESTED CONSTRUCTION STAGING:

1. CLOSE CKC TRAIL BETWEEN TOTEM LAKE BLVD NE AND 128TH LN NE FOR CONSTRUCTION DURATION AND CONSTRUCT TEMPORARY TRAIL DETOUR SOUTH OF NE 124TH ST ALONG EAST EDGE OF CKC ROW.
2. INSTALL DETOUR ROUTES FOR CKC TRAIL CLOSURE AND TEMPORARY FENCING INCLUDING HIGH VISIBILITY FENCING
3. INSTALL ENVIRONMENTAL PROTECTION & TEMPORARY EROSION CONTROL
   a. INSTALL TEMPORARY EROSION CONTROL MEASURES AS SHOWN IN THE PLANS OR APPROVED CONSTRUCTION SWPPP
   b. CONDUCT FISH CHECK (VOLUNTEERS)
   c. CONSTRUCT TEMPORARY PLYWOOD PLATFORMS AROUND DRILLED SHAFT LOCATIONS FOR P8–P10
4. INSTALL TEMPORARY STORM DRAIN BYPASS.
5. PRE–FABRICATE STEELWORK SUBASSEMBLIES IN SHOP. PRIME AND PAINT, MASKING OFF FIELD SPLICE LOCATIONS. FABRICATE PRECAST PANELS AT PLANT.

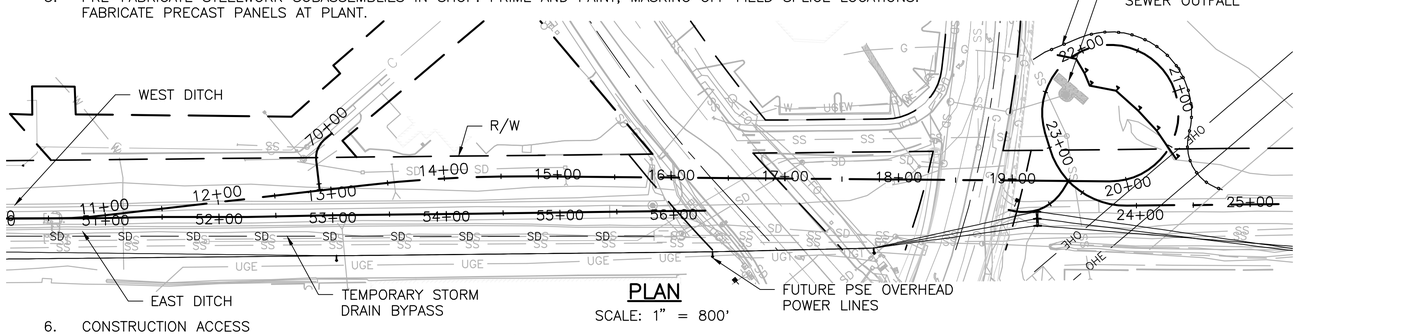

PLAN
SCALE: 1" = 800'

6. CONSTRUCTION ACCESS
   a. SOUTH APPROACH ACCESS FROM 120TH PL NE AND/OR 120TH AVE NE. ACCESS FROM NE 124TH ST SHALL BE LIMITED TO OFF–PEAK HOURS AS APPROVED BY COK.
   b. TRAFFIC ISLAND ACCESS FROM SLIP LANE OFF TOTEM LAKE BLVD NE
   c. LOOP RAMP ACCESS FROM TOTEM LAKE BLVD OR 128TH LN NE
   d. UTILIZING THE TRAIL BED FOR TRUCK ACCESS
      - TRAIL MUST BE MAINTAINED IN WORKING CONDITION FOR USERS THROUGHOUT CONSTRUCTION OUTSIDE OF CONSTRUCTION AREAS
      - TRAIL SHALL BE RETURNED TO EXISTING CONDITION AFTER CONSTRUCTION
   e. BENCH AN ACCESS ROAD ALONG THE SLOPE OF THE CKC TRAIL TO THE CENTER OF THE LOOP RAMP FROM THE NORTHEAST, OUTSIDE OF WETLANDS
   f. COULD USE HOG FUEL WITH TIMBER MATS FOR ACCESS INTO THE WETLANDS FOR FOUNDATION CONSTRUCTION.
   g. CONTRACTOR TO COORDINATE WITH KCWTD REGARDING LOADING ABOVE OR ADJACENT TO SEWER LINES. LOADS IMPARTED ON THE SEWERS SHALL NOT EXCEED NORMAL HIGHWAY LOADING.
   h. PROTECT STORM DRAIN OUTFALL NEAR PIER 11 AND INSTALL TEMPORARY WORKS TO FACILITATE ACCESS.
   i. CONTRACTOR TO PROTECT NUD SANITARY SEWER MANHOLE ADJACENT TO ABUTMENT A12 IN ACCORDANCE WITH NUD REQUIREMENTS.

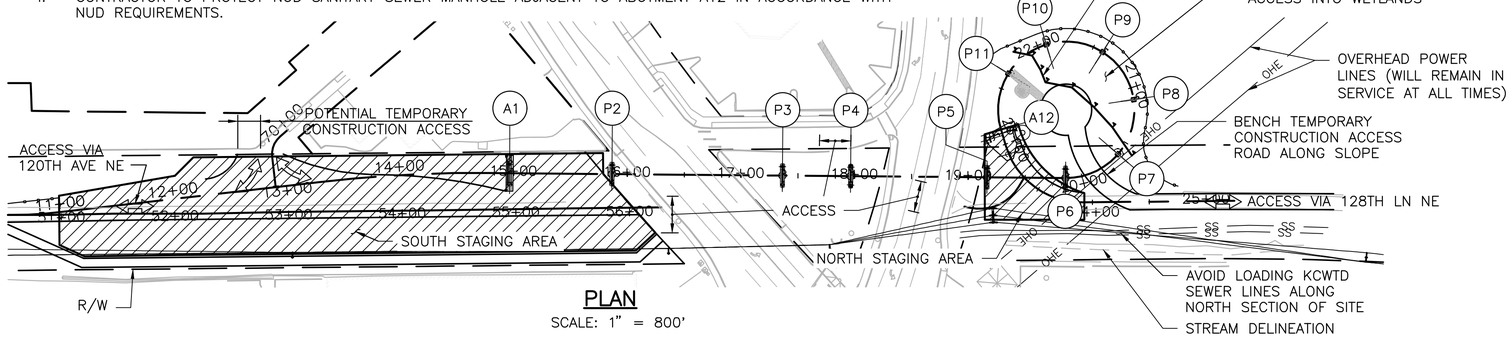

PLAN
SCALE: 1" = 800'

7. CLEAR DESIGNATED TREES ACROSS THE SITE AND STOCKPILE MATERIAL FOR RESTORATION AS REQUIRED. CLEAR AND GRUB REMAINDER OF DESIGNATED AREAS PER SPECIAL PROVISIONS.
8. CONSTRUCT ABUTMENTS A1 & A12 AND PIERS P2 – P6, SEE DWG TLC–S–122 & TLC–S–123.
   a. CONDUCT PRE & POST–CONSTRUCTION SEWER SCOPE OF NUD SEWER LINES IN THE VICINITY OF P11 AND A12
   b. POTHOLE SEWER PIPE LOCATIONS ADJACENT TO P11
   c. COMPLY WITH CONSTRUCTION CLEARANCES FROM THE PSE AND SCL OVERHEAD POWER LINES
   d. VERIFY UTILITIES NEAR P2, P3, P4
   e. CONSTRUCT DRILLED SHAFTS AND PILE CAPS
   f. CONSTRUCT REMAINDER OF PIERS AND ABUTMENTS
9. PREPARE STEEL ASSEMBLY STAGING AREAS
   a. GRADE THE AREA SOUTH OF P2 TO UTILIZE AS A STEEL ASSEMBLY AREA FOR ROADWAY SPANS, AKA SOUTH STAGING AREA
   b. GRADE THE AREA NORTH OF P5 TO UTILIZE AS A STEEL ASSEMBLY AREA FOR LOOP RAMP SPANS, AKA NORTH STAGING AREA
10. ERECTION SEQUENCE OF SPANS 2–11
   a. PRIOR TO STEELWORK ASSEMBLY, SUBMIT PROPOSED ERECTION SEQUENCE TO EOR FOR REVIEW AND APPROVAL.
   b. SPAN 4
      - DELIVER & ASSEMBLE SPAN 4 STEELWORK SUBASSEMBLIES IN SOUTH STAGING AREA (SEE DWG TLC–S–134)
      - DURING NIGHT CLOSURE:
        – UTILIZE HYDRAULIC BOGIES (OR SIMILAR) TO MOVE THE SPAN NORTHEAST ALONG THE CENTERLINE OF THE CKC CORRIDOR, ACROSS NE 124TH ST, ACROSS THE SLIP LANE, AND ACROSS TOTEM LAKE BLVD NE

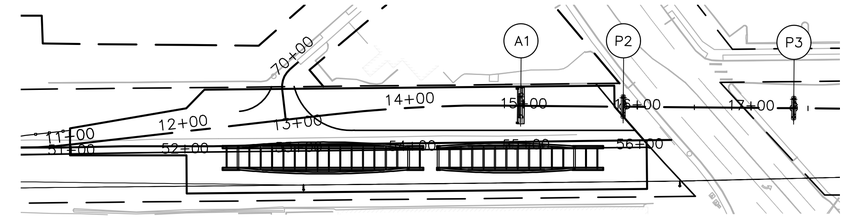

PLAN
SCALE: 1" = 800'

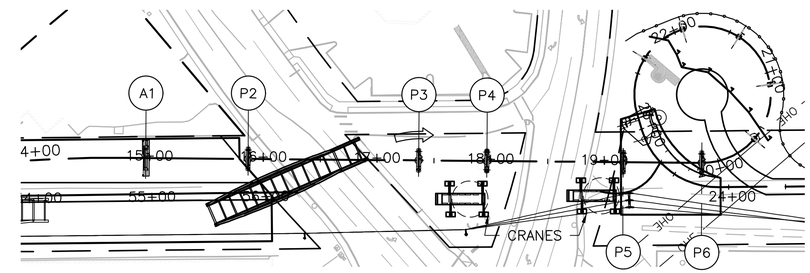

PLAN
SCALE: 1" = 800'

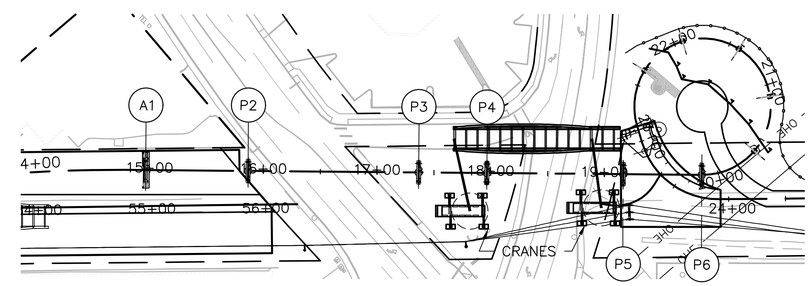

PLAN
SCALE: 1" = 800'

        – POSITION ONE CRANE IN THE TRAFFIC ISLAND AND THE SECOND CRANE WEST OF P5 WITHIN TOTEM LAKE BLVD
        – UTILIZING A TANDEM LIFT, THE CRANES PICK THE SPAN 4 STEELWORK AND SET IT ON THE BEARINGS ON P4 AND P5
      - SECURE FINAL BEARINGS

CITY OF KIRKLAND
DEPARTMENT OF PUBLIC WORKS
123 FIFTH AVENUE KIRKLAND, WA 98033
(425) 587-3800 www.kirklandwa.gov

NO.	DATE	BY	APPR.	REVISION
0	2019/12/06	CHJS	MWBM	ISSUE FOR BID

MATTHEW D. BAUGHMAN, STATE OF WASHINGTON, STRUCTURAL ENGINEER, PROFESSIONAL ENGINEER — 2019 DEC 06

COWI

SCVA	2019/12/06
DESIGNED BY:	DATE
CHJS	2019/12/06
DRAWN BY:	DATE
MWBM	2019/12/06
CHECKED BY:	DATE

CITY OF KIRKLAND
TOTEM LAKE CONNECTION

SUGGESTED CONSTRUCTION STAGING

SHEET: TLC–S–165
SCALE: AS SHOWN
FILENAME: A088367–S–165.dwg

File: D:\projectwise\cow\d0301252\A088367-S-165.dwg Save Date: Nov 06, 2019 9:37 AM Saved By: CHJS

SUGGESTED CONSTRUCTION STAGING CONTINUED:

10. ERECTION SEQUENCE OF SPANS 2–11 (CONT.)

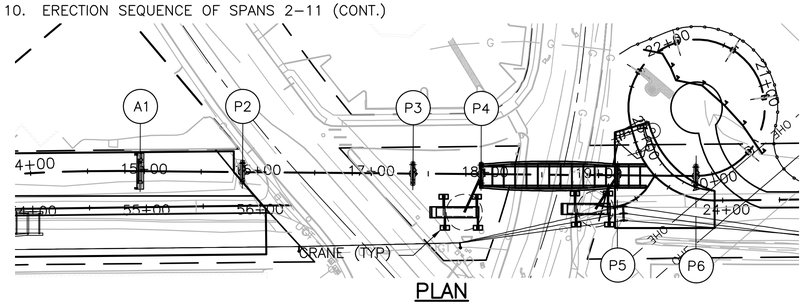

PLAN

SCALE: 1" = 800'

c. SPAN 2
- FOLLOWING OR PRIOR TO PLACEMENT OF SPAN 4 STEELWORK, DELIVER & ASSEMBLE SPAN 2 STEELWORK SUBASSEMBLIES (SEE DWG TLS–S–132) IN SOUTH STAGING AREA
- DURING NIGHT CLOSURE:
  - UTILIZE HYDRAULIC BOGIES (OR SIMILAR) TO MOVE THE SPAN NORTHEAST ALONG THE CENTERLINE OF THE CKC CORRIDOR ACROSS NE 124TH ST
  - POSITION ONE CRANE SOUTH OF NE 124TH ST NEAR P2 AND THE SECOND CRANE IN THE SLIP LANE WEST OF P3
  - UTILIZING A TANDEM LIFT, THE CRANES PICK THE SPAN 2 STEELWORK AND SET IT ON THE BEARINGS ON P2 AND P3
- SECURE FINAL BEARINGS

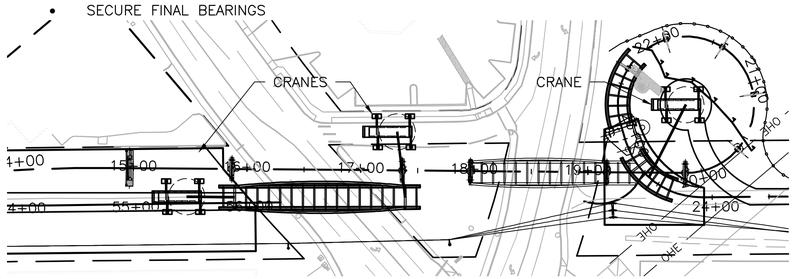

PLAN

SCALE: 1" = 800'

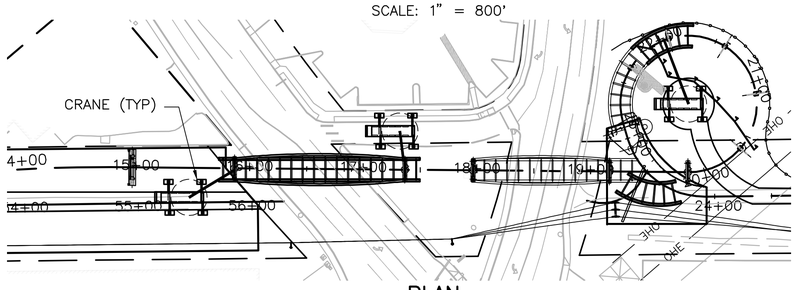

PLAN

SCALE: 1" = 800'

d. CONCURRENT WITH SPAN 4 ASSEMBLY, BEGIN ASSEMBLY OF THE LOOP RAMP STEEL Y–PIERS AND SPANS IN THE NORTH STAGING AREA

- INSTALL THE Y–PIERS WITH LEVELING NUTS ENGAGED BENEATH THE BASE PLATES
- UTILIZING A SINGLE CRANE LOCATED WITHIN THE CENTER OF THE LOOP RAMP, PROGRESSIVELY INSTALL THE STEELWORK OF EACH SPAN OF THE LOOP RAMP STARTING AT THE NORTH ABUTMENT AND WORKING IN REVERSE ORDER
  - CRANE SPAN 11 STEELWORK INTO POSITION
  - SECURE BOLTS AT THE ABUTMENT WALL AND ON THE Y–PIER P11
  - PLACE SPAN 10 STEELWORK AND SECURE TO P10
  - PLACE SPAN 9 STEELWORK AND SECURE TO P9, INCLUDING OVERLOOK
  - INSTALL TEMPORARY BRACING STRUTS TO P9 TO CONTROL LATERAL SWAY OF THE STEELWORK
  - PLACE SPAN 8 STEELWORK AND SECURE TO P8
  - PLACE SPAN 7 UNIT WHILE MAINTAINING SUFFICIENT CLEARANCE TO SCL POWER LINES
  - PLACE SPANS 5 & 6 AS AN ASSEMBLED UNIT TO ALLOW THE CRANE BOOM TO MAINTAIN SUFFICIENT DISTANCE FROM THE SCL POWER LINES, COULD UTILIZE A SPREADER BEAM WITH COUNTERWEIGTH ON OUTRIGGERS AND STABILITY LINES ATTACHED TO EACH END OF UNIT TO SHIFT THE CENTER OF GRAVITY FOR THE PICK
  - CONNECT BOLTED SPLICE AFTER ADJUSTING SPAN 4 END TO REMOVE SAG
  - SECURE FINAL BEARINGS AT PIER P6
  - REMOVE TEMPORARY BRACING STRUTS AT P9

e. ASSEMBLE SPAN 3 STEELWORK IN PLACE USING FALSEWORK IN TRAFFIC ISLAND

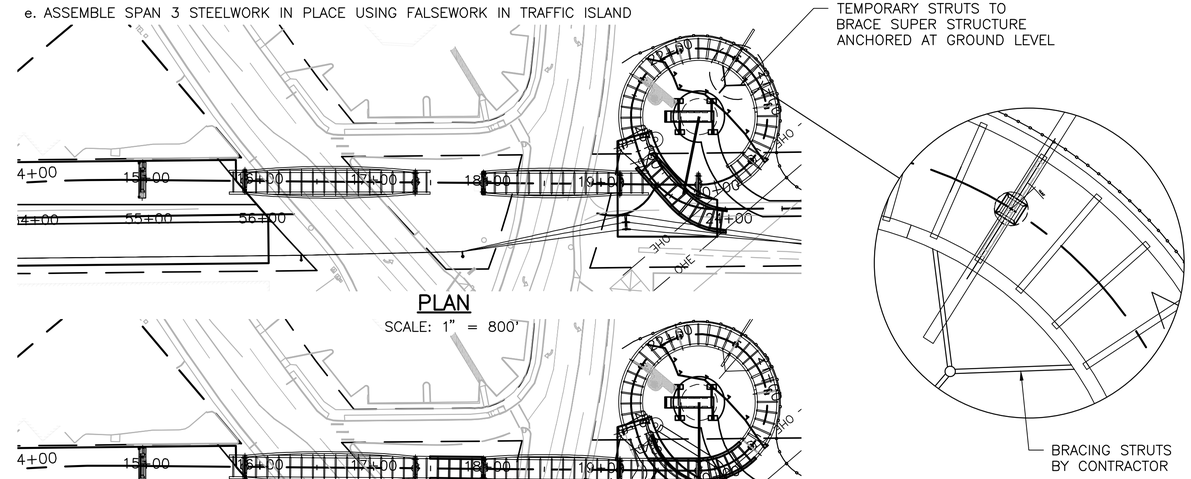

PLAN

SCALE: 1" = 800'

PLAN

SCALE: 1" = 800'

11. ASSEMBLE SPAN 1 STEELWORK & LIFT INTO PLACE ADJUSTING SPAN 2 END BEFORE CONNECTING BOLTED SPLICE TO REMOVE SAG
12. MSE WALL CONSTRUCTION
    a. CONSTRUCT EAST AND WEST MSE WALLS FOR SOUTH APPROACH RAMP
    b. CONSTRUCT NORTH APPROACH MSE WALLS

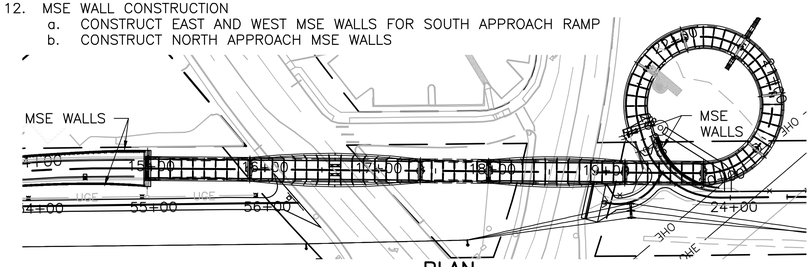

PLAN

SCALE: 1" = 800'

13. CONCURRENT WITH MSE WALL CONSTRUCTION, PLACE PRECAST CONCRETE DECK PANELS ACROSS ALL SPANS FROM A1 TO P4 AND A12 TO P4 (TBC WITH ENGINEER)
14. CIP CONCRETE POUR SEQUENCE IN TWO STAGES
    a. FORM SPANS 3 AND 11 ON FALSEWORK AND ALL CURBS/DECK FASCIA, PLACE REBAR, RAILING ANCHORAGES (ENSURING NO CONFLICTS WITH CONDUITS) AND DECK DRAINS
    b. INSTALL SPILL PROTECTION AROUND LOOP RAMP OVER WETLANDS AND ON SPANS 2 AND SPAN 4
    c. POUR FROM A12 TO P4 FROM LOW TO HIGH ELEVATION
    d. POUR FROM A1 TO P3 FROM LOW TO HIGH ELEVATION
    e. POUR FROM P3 TO P4, APPLYING COLORED PIGMENT TO SURFACE
    f. POUR APPROACH SLABS
15. INSTALL JOINTS, DAMPERS AND RAILING
16. APPLY PIGMENTED SEALER TO A1–P6 AND A12, AND DECK AS DESIGNATED IN PLANS
17. INSTALL LIGHTING, RESTING AREA TREATMENT AND BENCHES
18. REMOVE TEMPORARY CONSTRUCTION ACCESS AND LAYDOWN MATERIALS. FINISH GRADING
19. COMPLETE L–10, L–50, L–60 & L–70 PATHWAYS AND DITCH ALONG L–50
20. RESTORATION
    a. IN–KIND RESTORATION OF CKC TRAIL FROM 120TH ST NE TO 128TH LN NE, FINISHED GRADING & INFILTRATION PONDS
    b. SOIL PREPARATION, LANDSCAPING, AND IRRAGATION. TREE PLANTINGS & SNAGS
    c. REMOVE FENCING

CITY OF KIRKLAND
DEPARTMENT OF PUBLIC WORKS
123 FIFTH AVENUE KIRKLAND, WA 98033
(425) 587-3800 www.kirklandwa.gov

NO.	DATE	BY	APPR.	REVISION
0	2019/12/06	CHJS	MWBM	ISSUE FOR BID

MATTHEW D. BAUGHMAN — STATE OF WASHINGTON — STRUCTURAL ENGINEER — PROFESSIONAL ENGINEER — 2019 DEC 06

COWI

SCVA — DESIGNED BY:	2019/12/06 DATE
CHJS — DRAWN BY:	2019/12/06 DATE
MWBM — CHECKED BY:	2019/12/06 DATE

CITY OF KIRKLAND
TOTEM LAKE CONNECTION

SUGGESTED CONSTRUCTION STAGING

SHEET: TLC–S–166

SCALE: AS SHOWN

FILENAME: A088367–S–165.dwg

File: D:\projectwise\cow\d0301252\A088367-S-165.dwg Save Date: Nov 06, 2019 9:37 AM Saved By: CHJS

GENERAL NOTE:

IF THE FOLLOWING CITY OF KIRKLAND STANDARD NOTES CONFLICT WITH STANDARD SPECIFICATIONS, THE MORE STRINGENT REQUIREMENT OF THE TWO SHALL APPLY AS DIRECTED BY THE ENGINEER.

CITY OF KIRKLAND EROSION/SEDIMENTATION CONTROL PLAN NOTES (AS OF 01/30/2019)

1. THE APPROVED CONSTRUCTION SEQUENCE SHALL BE AS FOLLOWS:
   a. CONDUCT PRE–CONSTRUCTION MEETING.
   b. FLAG OR FENCE CLEARING LIMITS.
   c. POST SIGN WITH NAME AND PHONE NUMBER OF TESC SUPERVISOR.
   d. INSTALL CATCH BASIN PROTECTION IF REQUIRED.
   e. GRADE AND INSTALL CONSTRUCTION ENTRANCE(S).
   f. INSTALL PERIMETER PROTECTION (SILT FENCE, BRUSH BARRIER, ETC.).
   g. CONSTRUCT SEDIMENT PONDS AND TRAPS.
   h. GRADE AND STABILIZE CONSTRUCTION ROADS.
   i. CONSTRUCT SURFACE WATER CONTROLS (INTERCEPTOR DIKES, PIPE SLOPE DRAINS, ETC.)
   SIMULTANEOUSLY WITH CLEARING AND GRADING FOR PROJECT DEVELOPMENT.
   j. MAINTAIN EROSION CONTROL MEASURE IN ACCORDANCE WITH CITY OF KIRKLAND STANDARDS AND MANUFACTURER'S RECOMMENDATIONS.
   k. RELOCATE EROSION CONTROL MEASURES OR INSTALL NEW MEASURES SO THAT AS SITE CONDITIONS CHANGE, THE EROSION AND SEDIMENT CONTROL IS ALWAYS IN ACCORDANCE WITH THE CITY TESC MINIMUM REQUIREMENTS.
   l. COVER ALL AREAS WITHIN THE SPECIFIED TIME FRAME WITH STRAW, WOOD FIBER MULCH, COMPOST, PLASTIC SHEETING, CRUSHED ROCK OR EQUIVALENT.
   m. STABILIZE ALL AREAS THAT REACH FINAL GRADE WITHIN 7 DAYS.
   n. SEED OR SOD ANY AREAS TO REMAIN UNWORKED FOR MORE THAN 30 DAYS.
   o. UPON COMPLETION OF THE PROJECT, ALL DISTURBED AREAS MUST BE STABILIZED AND BEST MANAGEMENT PRACTICES REMOVED IF APPROPRIATE.
2. CONTRACTOR IS RESPONSIBLE FOR KEEPING STREETS CLEAN AND FREE OF CONTAMINANTS AT ALL TIMES AND FOR PREVENTING AN ILLICIT DISCHARGE (KMC 15.52) INTO THE MUNICIPAL STORM DRAIN SYSTEM. IF YOUR CONSTRUCTION PROJECT CAUSES AN ILLICIT DISCHARGE TO THE MUNICIPAL STORM DRAIN SYSTEM, THE CITY OF KIRKLAND STORM MAINTENANCE DIVISION WILL BE CALLED TO CLEAN THE PUBLIC STORM SYSTEM, AND OTHER AFFECTED PUBLIC INFRASTRUCTURE. THE CONTRACTOR(S), PROPERTY OWNER, AND ANY OTHER RESPONSIBLE PARTY MAY BE CHARGED ALL COSTS ASSOCIATED WITH THE CLEAN–UP AND MAY ALSO BE ASSESSED MONETARY PENALTIES (KMC 1.12.200). THE MINIMUM PENALTY IS $250. A FINAL INSPECTION OF YOUR PROJECT WILL NOT BE GRANTED UNTIL ALL COSTS ASSOCIATED WITH THE CLEAN–UP, AND PENALTIES, ARE PAID TO THE CITY OF KIRKLAND.
3. CONSTRUCTION DEWATERING DISCHARGES SHALL ALWAYS MEET WATER QUALITY GUIDELINES LISTED IN COK POLICY E–1. SPECIFICALLY, DISCHARGES TO THE PUBLIC STORMWATER DRAINAGE SYSTEM MUST BE BELOW 25NTU, AND NOT CONSIDERED AN ILLICIT DISCHARGE (PER KMC 15.52.090). TEMPORARY DISCHARGES TO SANITARY SEWER REQUIRE PRIOR AUTHORIZATION AND PERMIT FROM KING COUNTY INDUSTRIAL WASTE PROGRAM (206–263–3000) AND NOTIFICATION TO THE PUBLIC WORKS CONSTRUCTION INSPECTOR.
4. ALL WORK AND MATERIALS SHALL BE IN ACCORDANCE WITH CITY OF KIRKLAND STANDARDS AND SPECIFICATIONS.
5. THE BOUNDARIES OF THE CLEARING LIMITS SHOWN ON THIS PLAN SHALL BE SET BY SURVEY AND CLEARLY FLAGGED IN THE FIELD BY A CLEARING CONTROL FENCE PRIOR TO CONSTRUCTION. DURING THE CONSTRUCTION PERIOD, NO DISTURBANCE OR REMOVAL OF ANY GROUND COVER BEYOND THE FLAGGED CLEARING LIMITS SHALL BE PERMITTED. THE FLAGGING SHALL BE MAINTAINED BY THE PERMITTEE/CONTRACTOR FOR THE DURATION OF CONSTRUCTION.
6. APPROVAL OF THIS EROSION/SEDIMENTATION CONTROL (ESC) PLAN DOES NOT CONSTITUTE AN APPROVAL OF PERMANENT ROAD OR DRAINAGE DESIGN (E.G., SIZE AND LOCATION OF ROADS, PIPES, RESTRICTORS, CHANNELS, RETENTION FACILITIES, UTILITIES, ETC.).
7. THE IMPLEMENTATION OF THIS ESC PLAN AND THE CONSTRUCTION, MAINTENANCE, REPLACEMENT, AND UPGRADING OF THESE ESC FACILITIES IS THE RESPONSIBILITY OF THE PERMITTEE/CONTRACTOR UNTIL ALL CONSTRUCTION IS APPROVED.
8. A COPY OF THE APPROVED ESC PLANS MUST BE ON THE JOB SITE WHENEVER CONSTRUCTION IS IN PROGRESS.
9. THE ESC FACILITIES SHOWN ON THIS PLAN MUST BE CONSTRUCTED PRIOR TO OR IN CONJUNCTION WITH ALL CLEARING AND GRADING ACTIVITIES IN SUCH A MANNER AS TO ENSURE THAT SEDIMENT–LADEN WATER DOES NOT ENTER THE DRAINAGE SYSTEM OR VIOLATE APPLICABLE WATER STANDARDS. WHEREVER POSSIBLE, MAINTAIN NATURAL VEGETATION FOR SILT CONTROL.
10. THE ESC FACILITIES SHALL BE CONSTRUCTED IN ACCORDANCE WITH THE DETAILS ON THE APPROVED PLANS. LOCATIONS MAY BE MOVED TO SUIT FIELD CONDITIONS, SUBJECT TO APPROVAL BY THE ENGINEER AND THE CITY OF KIRKLAND INSPECTOR.
11. THE ESC FACILITIES SHOWN ON THIS PLAN ARE THE MINIMUM REQUIREMENTS FOR ANTICIPATED SITE CONDITIONS. DURING THE CONSTRUCTION PERIOD, THESE ESC FACILITIES SHALL BE UPGRADED (E.G., ADDITIONAL SUMPS, RELOCATION OF DITCHES AND SILT FENCES, ETC.) AS NEEDED FOR UNEXPECTED STORM EVENTS. ADDITIONALLY, MORE ESC FACILITIES MAY BE REQUIRED TO ENSURE COMPLETE SILTATION CONTROL. THEREFORE, DURING THE COURSE OF CONSTRUCTION IT SHALL BE THE OBLIGATION AND RESPONSIBILITY OF THE CONTRACTOR TO ADDRESS ANY NEW CONDITIONS THAT MAY BE CREATED BY HIS ACTIVITIES AND TO PROVIDE ADDITIONAL FACILITIES OVER AND ABOVE THE MINIMUM REQUIREMENTS AS MAY BE NEEDED.
12. THE ESC FACILITIES SHALL BE INSPECTED BY THE PERMITTEE/CONTRACTOR DAILY DURING NON–RAINFALL PERIODS, EVERY HOUR (DAYLIGHT) DURING A RAINFALL EVENT, AND AT THE END OF EVERY RAINFALL, AND MAINTAINED AS NECESSARY TO ENSURE THEIR CONTINUED FUNCTIONING. IN ADDITION, TEMPORARY SILTATION PONDS AND ALL TEMPORARY SILTATION CONTROLS SHALL BE MAINTAINED IN A SATISFACTORY CONDITION UNTIL SUCH TIME THAT CLEARING AND/OR CONSTRUCTION IS COMPLETED, PERMANENT DRAINAGE FACILITIES ARE OPERATIONAL, AND THE POTENTIAL FOR EROSION HAS PASSED. WRITTEN RECORDS SHALL BE KEPT DOCUMENTING THE REVIEWS OF THE ESC FACILITIES.
13. THE ESC FACILITIES ON INACTIVE SITES SHALL BE INSPECTED AND MAINTAINED A MINIMUM OF ONCE A MONTH OR WITHIN 48 HOURS FOLLOWING A STORM EVENT.
14. STABILIZED CONSTRUCTION ENTRANCES SHALL BE INSTALLED AT THE BEGINNING OF CONSTRUCTION AND MAINTAINED FOR THE DURATION OF THE PROJECT. ADDITIONAL MEASURES, SUCH AS WASH PADS, MAY BE REQUIRED TO ENSURE THAT ALL PAVED AREAS ARE KEPT CLEAN FOR THE DURATION OF THE PROJECT.
15. ALL DENUDED SOILS MUST BE STABILIZED WITH AN APPROVED TESC METHOD (E.G. SEEDING, MULCHING, PLASTIC COVERING, CRUSHED ROCK) WITHIN THE FOLLOWING TIMELINES:
   - MAY 1 TO SEPTEMBER 30 –– SOILS MUST BE STABILIZED WITHIN 7 DAYS OF GRADING.
   - OCTOBER 1 TO APRIL 30 –– SOILS MUST BE STABILIZED WITHIN 2 DAYS OF GRADING.
   - STABILIZE SOILS AT THE END OF THE WORKDAY PRIOR TO A WEEKEND, HOLIDAY, OR PREDICTED RAIN EVENT.
16. WHERE SEEDING FOR TEMPORARY EROSION CONTROL IS REQUIRED, FAST GERMINATING GRASSES SHALL BE APPLIED AT AN APPROPRIATE RATE (EXAMPLE: ANNUAL OR PERENNIAL RYE APPLIED AT APPROXIMATELY 80 POUNDS PER ACRE).
17. WHERE STRAW MULCH IS REQUIRED FOR TEMPORARY EROSION CONTROL, IT SHALL BE APPLIED AT A MINIMUM THICKNESS OF 2".
18. ALL LOTS ADJOINING OR HAVING ANY NATIVE GROWTH PROTECTION EASEMENTS (NGPE) SHALL HAVE A 6' HIGH TEMPORARY CONSTRUCTION FENCE (CHAIN LINK WITH PIER BLOCKS) SEPARATING THE LOT (OR BUILDABLE PORTIONS OF THE LOT) FROM THE AREA RESTRICTED BY THE NGPE AND SHALL BE INSTALLED PRIOR TO ANY GRADING OR CLEARING AND REMAIN IN PLACE UNTIL THE PLANNING DEPARTMENT AUTHORIZES REMOVAL.
19. CLEARING LIMITS SHALL BE DELINEATED WITH A CLEARING CONTROL FENCE. THE CLEARING CONTROL FENCE SHALL CONSIST OF A 6–FT. HIGH CHAIN LINK FENCE ADJACENT THE DRIP LINE OF TREES TO BE SAVED, WETLAND OR STREAM BUFFERS, AND SENSITIVE SLOPES. CLEARING CONTROL FENCES ALONG WETLAND OR STREAM BUFFERS OR UPSLOPE OF SENSITIVE SLOPES SHALL BE ACCOMPANIED BY AN EROSION CONTROL FENCE. IF APPROVED BY THE CITY, A FOUR–FOOT HIGH ORANGE MESH CLEARING CONTROL FENCE MAY BE USED TO DELINEATE CLEARING LIMITS IN ALL OTHER AREAS.
20. OFF–SITE STREETS MUST BE KEPT CLEAN AT ALL TIMES. IF DIRT IS DEPOSITED ON THE PUBLIC STREET SYSTEM, THE STREET SHALL BE IMMEDIATELY CLEANED WITH POWER SWEEPER OR OTHER EQUIPMENT. ALL VEHICLES SHALL LEAVE THE SITE BY WAY OF THE CONSTRUCTION ENTRANCE AND SHALL BE CLEANED OF ALL DIRT THAT WOULD BE DEPOSITED ON THE PUBLIC STREETS.
21. ROCK FOR EROSION PROTECTION OF ROADWAY DITCHES, WHERE REQUIRED, MUST BE OF SOUND QUARRY ROCK, PLACED TO A DEPTH OF 1' AND MUST MEET THE FOLLOWING SPECIFICATIONS: 4"–8" ROCK/40%–70% PASSING; 2"–4" ROCK/30%–40% PASSING; AND 1"–2" ROCK/10%–20% PASSING. RECYCLED CONCRETE SHALL NOT BE USED FOR EROSION PROTECTION, INCLUDING CONSTRUCTION ENTRANCE OR TEMPORARY STABILIZATION ELSEWHERE ON THE SITE.
22. IF ANY PART(S) OF THE CLEARING LIMIT BOUNDARY OR TEMPORARY EROSION/SEDIMENTATION CONTROL PLAN IS/ARE DAMAGED, IT SHALL BE REPAIRED IMMEDIATELY.
23. ALL PROPERTIES ADJACENT TO THE PROJECT SITE SHALL BE PROTECTED FROM SEDIMENT DEPOSITION AND RUNOFF.
24. AT NO TIME SHALL MORE THAN 1' OF SEDIMENT BE ALLOWED TO ACCUMULATE WITHIN A CATCH BASIN. ALL CATCH BASINS AND CONVEYANCE LINES SHALL BE CLEANED IMMEDIATELY FOLLOWING REMOVAL OF EROSION CONTROL BMPS. THE CLEANING OPERATION SHALL NOT FLUSH SEDIMENT–LADEN WATER INTO THE DOWNSTREAM SYSTEM.
25. ANY PERMANENT RETENTION/DETENTION FACILITY USED AS A TEMPORARY SETTLING BASIN SHALL BE MODIFIED WITH THE NECESSARY EROSION CONTROL MEASURES AND SHALL PROVIDE ADEQUATE STORAGE CAPACITY. IF THE PERMANENT FACILITY IS TO FUNCTION ULTIMATELY AS AN INFILTRATION OR DISPERSION SYSTEM, THE FACILITY SHALL NOT BE USED AS A TEMPORARY SETTLING BASIN. NO UNDERGROUND DETENTION TANK, DETENTION VAULT, OR SYSTEM WHICH BACKS UNDER OR INTO A POND SHALL BE USED AS A TEMPORARY SETTLING BASIN.
26. ALL EROSION/SEDIMENTATION CONTROL PONDS WITH A DEAD STORAGE DEPTH EXCEEDING 6" MUST HAVE A PERIMETER FENCE WITH A MINIMUM HEIGHT OF 3'.
27. THE WASHED GRAVEL BACKFILL ADJACENT TO THE FILTER FABRIC FENCE SHALL BE REPLACED AND THE FILTER FABRIC CLEANED IF IT IS NONFUNCTIONAL BY EXCESSIVE SILT ACCUMULATION AS DETERMINED BY THE CITY OF KIRKLAND. ALSO, ALL INTERCEPTOR SWALES SHALL BE CLEANED IF SILT ACCUMULATION EXCEEDS ONE–QUARTER DEPTH.
28. PRIOR TO THE OCTOBER 1 OF EACH YEAR (THE BEGINNING OF THE WET SEASON), ALL DISTURBED AREAS SHALL BE REVIEWED TO IDENTIFY WHICH ONES CAN BE SEEDED IN PREPARATION FOR THE WINTER RAINS. THE IDENTIFIED DISTURBED AREA SHALL BE SEEDED WITHIN ONE WEEK AFTER OCTOBER 1. A SITE PLAN DEPICTING THE AREAS TO BE SEEDED AND THE AREAS TO REMAIN UNCOVERED SHALL BE SUBMITTED TO THE PUBLIC WORKS CONSTRUCTION INSPECTOR. THE INSPECTOR CAN REQUIRE SEEDING OF ADDITIONAL AREAS IN ORDER TO PROTECT SURFACE WATERS, ADJACENT PROPERTIES, OR DRAINAGE FACILITIES.
29. SEE SPECIAL PROVISION 2–06.3(3) FOR PROTECTION AND PREPARATION OF SUBGRADE AT ALL AREAS USED FOR INFILTRATION OR PERVIOUS PAVEMENT.
30. IF THE TEMPORARY CONSTRUCTION ENTRANCE OR ANY OTHER AREA WITH HEAVY VEHICLE LOADING IS LOCATED IN THE SAME AREA TO BE USED FOR INFILTRATION OR PERVIOUS PAVEMENT, 6" OF SEDIMENT BELOW THE GRAVEL SHALL BE REMOVED PRIOR TO INSTALLATION OF THE INFILTRATION FACILITY OR PERVIOUS PAVEMENT (TO REMOVE FINES ACCUMULATED DURING CONSTRUCTION).
31. ANY CATCH BASINS COLLECTING RUNOFF FROM THE SITE, WHETHER THEY ARE ON OR OFF THE SITE, SHALL HAVE ADEQUATE PROTECTION FROM SEDIMENT. CATCH BASINS DIRECTLY DOWNSTREAM OF THE CONSTRUCTION ENTRANCE OR ANY OTHER CATCH BASIN AS DETERMINED BY THE CITY INSPECTOR SHALL BE PROTECTED WITH A "STORM DRAIN PROTECTION INSERT" OR EQUIVALENT.
32. IF A SEDIMENT POND IS NOT PROPOSED, A BAKER TANK OR OTHER TEMPORARY GROUND AND/OR SURFACE WATER STORAGE TANK MAY BE REQUIRED DURING CONSTRUCTION, DEPENDING ON WEATHER CONDITIONS.
33. DO NOT FLUSH CONCRETE BY–PRODUCTS OR TRUCKS NEAR OR INTO THE STORM DRAINAGE SYSTEM. IF EXPOSED AGGREGATE IS FLUSHED INTO THE STORM SYSTEM, IT COULD MEAN RE–CLEANING THE ENTIRE DOWNSTREAM STORM SYSTEM, OR POSSIBLY RE–LAYING THE STORM LINE.
34. RECYCLED CONCRETE SHALL NOT BE STOCKPILED ON SITE, UNLESS FULLY COVERED WITH NO POTENTIAL FOR RELEASE OF RUNOFF.

CITY OF KIRKLAND STORM DRAINAGE PLAN NOTES (AS OF 01/30/2019)

1. A PRE–CONSTRUCTION CONFERENCE SHALL BE HELD PRIOR TO THE START OF CONSTRUCTION. THE CONTRACTOR SHALL BE RESPONSIBLE FOR SECURING ALL NECESSARY PERMITS PRIOR TO CONSTRUCTION.
2. BEFORE ANY CONSTRUCTION MAY OCCUR, THE CONTRACTOR SHALL HAVE PLANS WHICH HAVE BEEN SIGNED AND APPROVED BY THE CITY OF KIRKLAND PUBLIC WORKS DEPARTMENT, OBTAINED ALL CITY, COUNTY, STATE, FEDERAL AND OTHER REQUIRED PERMITS, AND HAVE POSTED ALL REQUIRED BONDS.
3. ALL STORM DRAINAGE IMPROVEMENTS SHALL BE DESIGNED AND CONSTRUCTED IN ACCORDANCE WITH THE LATEST EDITION OF THE CITY OF KIRKLAND PUBLIC WORKS PRE–APPROVED PLANS AND POLICIES AND THE STANDARD SPECIFICATIONS FOR ROAD. BRIDGE AND MUNICIPAL CONSTRUCTION, PREPARED BY WSDOT AND THE AMERICAN PUBLIC WORKS ASSOCIATION (APWA).
4. ANY DEVIATION FROM THE APPROVED PLANS WILL REQUIRE WRITTEN APPROVAL, ALL CHANGES SHALL BE SUBMITTED TO THE CITY.
5. A COPY OF THE APPROVED STORM WATER PLANS MUST BE ON THE JOB SITE WHENEVER CONSTRUCTION IS IN PROGRESS.
6. ALL DISTURBED AREAS SHALL BE SEEDED AND MULCHED OR SIMILARLY STABILIZED TO THE SATISFACTION OF THE CITY OF KIRKLAND DEPARTMENT OF PUBLIC WORKS FOR THE PREVENTION OF ON–SITE EROSION AFTER THE COMPLETION OF CONSTRUCTION.
7. MINIMUM COVER OVER STORM DRAINAGE PIPES IN ROW OR VEHICULAR PATH SHAFT BE 18 INCHES, UNLESS OTHER DESIGN IS APPROVED.
8. STEEL PIPE SHAFT HAVE ASPHALT TREATMENT #1 OR BETTER INSIDE AND OUTSIDE.
9. ALL CATCH BASINS SHALL BE TYPE I UNLESS OTHERWISE NOTED. CATCH BASINS WITH A DEPTH OF OVER FIVE FEET (5') TO THE PIPE INVERT SHALL BE A TYPE II CATCH BASIN. TYPE II CATCH BASINS EXCEEDING FIVE FEET (5') IN DEPTH SHALL HAVE A STANDARD LADDER INSTALLED.
10. ALL STORM DRAINAGE MAIN EXTENSIONS WITHIN THE PUBLIC RIGHT–OF–WAY OR IN EASEMENTS MUST BE STAKED FOR LINE AND GRADE PRIOR TO STARTING CONSTRUCTION.
11. ROCK FOR EROSION PROTECTION OF ROADWAY DITCHES, WHERE REQUIRED, MUST BE OF SOUND QUARRY ROCK, PLACED TO A DEPTH OF ONE FOOT (1') AND MUST MEET THE FOLLOWING SPECIFICATIONS: 4"–8" ROCK/40%–70% PASSING; 2"–4" ROCK/30%–40% PASSING; 2"–MINUS ROCK/10%–20% PASSING.RECYCLED CONCRETE SHALL NOT BE USED FOR EROSION PROTECTION, INCLUDING FOR CONSTRUCTION ENTRANCE OR TEMPORARY STABILIZATION ELSEWHERE ON SITE.
12. ALL PIPE, MANHOLES, CATCH BASINS, AND APPURTENANCES SHALL BE LAID ON A PROPERLY PREPARED FOUNDATION IN ACCORDANCE WITH THE CURRENT STATE OF WASHINGTON STANDARD SPECIFICATIONS FOR ROAD AND BRIDGE CONSTRUCTION (WSDOT). THIS SHALL INCLUDE NECESSARY LEVELING OF THE TRENCH BOTTOM OR THE TOP OF THE FOUNDATION MATERIAL AS WELL AS PLACEMENT AND COMPACTION OF REQUIRED BEDDING MATERIAL TO UNIFORM GRADE SO THAT THE ENTIRE LENGTH OF THE PIPE WILL BE SUPPORTED ON A UNIFORMLY DENSE, UNYIELDING BASE. IF THE NATIVE MATERIAL IN THE BOTTOM OF THE TRENCH MEETS THE REQUIREMENTS FOR "GRAVEL BACKFILL FOR PIPE BEDDING," THE FIRST LIFT OF PIPE BEDDING MAY BE OMITTED PROVIDED THE MATERIAL IN THE BOTTOM OF THE TRENCH IS LOOSENED, REGRADED, AND COMPACTED TO FORM A DENSE UNYIELDING BASE. ALL PIPE BEDDING SHALL BE APWA CLASS B, TYPE I, OR BETTER. PIPE SHALL NOT BE INSTALLED ON SOD, FROZEN EARTH, LARGE BOULDERS, OR ROCK. PIPE BEDDING FOR FLEXIBLE PIPES SHALL BE PEA GRAVEL TO THE SPRINGLINE OF THE PIPE.
13. CONSTRUCTION OF DEWATERING DISCHARGES SHALL ALWAYS MEET WATER QUALITY GUIDELINES LISTED IN COK POLICY E–1. SPECIFICALLY, DISCHARGES TO THE PUBLIC STORMWATER DRAINAGE SYSTEM MUST BE BELOW 25NTU, AND NOT CONSIDERED A PROHIBITED DISCHARGE (PER KMC 15.52.090). TEMPORARY DISCHARGES TO SANITARY SEWER REQUIRE PRIOR AUTHORIZATION AND PERMIT FROM KING COUNTY INDUSTRIAL WASTE PROGRAM (206–263–3000) AND NOTIFICATION TO THE PUBLIC WORKS CONSTRUCTION INSPECTOR.
14. ISSUANCE OF A BUILDING OR LAND SURFACE PLODIFICATION PERMIT BY THE CITY OF KIRKLAND DOES NOT RELIEVE THE OWNER OF THE CONTINUING LEGAL OBLIGATION AND/OR LIABILITY CONNECTED WITH STORM SURFACE WATER DISPOSITION. FURTHER, THE CITY OF KIRKLAND DOES NOT ACCEPT ANY OBLIGATION FOR THE PROPER FUNCTIONING AND MAINTENANCE OF THE SYSTEM DURING OR FOLLOWING CONSTRUCTION EXCEPT AS OUTLINED IN THE CITY OF KIRKLAND PUBLIC WORKS STANDARDS.
15. ALL TRENCH BACKFILL SHALL BE COMPACTED TO 95 PERCENT DENSITY IN ROADWAYS, ROADWAY SHOULDERS, ROADWAY PRISM AND DRIVEWAYS, AND 85 PERCENT DENSITY IN UNPAVED AREAS. ALL PIPE ZONE COMPACTION SHALL BE 95 PERCENT.
16. THE CONTRACTOR SHALL BE RESPONSIBLE FOR PROVIDING ADEQUATE SAFEGUARDS, SAFETY DEVICES, PROTECTIVE EQUIPMENT, CONFINED SPACE PROTECTION, FLAGGERS, AND ANY OTHER NEEDED ACTIONS TO PROTECT THE LIFE, HEALTH, AND SAFETY OF THE PUBLIC, AND TO PROTECT PROPERTY IN CONNECTION WITH THE PERFORMANCE OF WORK COVERED BY THE CONTRACT. ANY WORK WITHIN THE TRAVELED RIGHT–OF–WAY THAT MAY INTERRUPT NORMAL TRAFFIC FLOW SHALL REQUIRE A TRAFFIC CONTROL PLAN APPROVED BY THE CITY OF KIRKLAND. ALL SECTIONS OF THE WSDOT STANDARD SPECIFICATIONS, TRAFFIC CONTROL, AND THE MANUAL OF UNIFORM TRAFFIC CONTROL DEVICES (MUTCD) SHALL APPLY.
17. NO FINAL CUT OR FILL SLOPE SHALL EXCEED SLOPES OF TWO (2) HORIZONTAL TO ONE (1) VERTICAL WITHOUT STABILIZATION BY ROCKERY OR BY A STRUCTURAL RETAINING WALL.
18. ALL MANHOLE LADDERS SHALL BE FIRMLY ATTACHED AND EXTEND TO WITHIN 1' OF THE BOTTOM OF THE STRUCTURE.
19. APPROXIMATE LOCATIONS OF EXISTING UTILITIES HAVE BEEN OBTAINED FROM AVAILABLE RECORDS AND ARE SHOWN FOR CONVENIENCE. THE CONTRACTOR SHALL BE RESPONSIBLE FOR VERIFICATION OF EXISTING UTILITY LOCATIONS WHETHER OR NOT THESE UTILITIES ARE SHOWN ON THE PLANS. THE CONTRACTOR SHALL EXERCISE ALL CARE TO AVOID DAMAGE TO ANY UTILITY. IF CONFLICTS WITH EXISTING UTILITIES ARISE DURING CONSTRUCTION, THE CONTRACTOR SHALL NOTIFY THE CITY CONSTRUCTION INSPECTOR AND ANY CHANGES REQUIRED SHALL BE APPROVED BY THE DEVELOPMENT ENGINEER PRIOR TO COMMENCEMENT OF RELATED CONSTRUCTION ON THE PROJECT.
20. THE UNDERGROUND UTILITY LOCATION SERVICE SHALL BE CONTACTED FOR FIELD LOCATION OF EXISTING UTILITIES PRIOR TO ANY CONSTRUCTION. THE OWNER OR HIS REPRESENTATIVE SHALL BE CONTACTED IF A UTILITY CONFLICT EXISTS. FOR UTILITY LOCATION IN KING COUNTY, CALL 1–800–424–5555. THE CONTRACTOR IS RESPONSIBLE TO ENSURE THAT UTILITY LOCATES ARE MAINTAINED THROUGHOUT THE LIFE OF THE PROJECT.
21. THE CONTRACTOR SHALL VERIFY THE LOCATIONS, WIDTHS, THICKNESSES, AND ELEVATIONS OF ALL EXISTING PAVEMENTS AND STRUCTURES THAT ARE TO INTERFACE WITH NEW WORK. PROVIDE ALL TRIMMING, CUTTING, SAW CUTTING, GRADING, LEVELING, SLOPING, COATING, AND OTHER WORK, INCLUDING MATERIALS AS NECESSARY, TO CAUSE THE INTERFACE WITH EXISTING WORKS TO BE PROPER, ACCEPTABLE TO THE ENGINEER AND THE CITY OF KIRKLAND, COMPLETE IN PLACE AND READY TO USE.
22. ALL INLET, MANHOLE, AND CATCH BASIN FRAMES AND GRATES SHALL NOT BE ADJUSTED TO GRADE UNTIL IMMEDIATELY PRIOR TO FINAL PAVING. ALL CATCH BASIN GRATES SHALL BE SET 0.10' BELOW PAVEMENT LEVEL.
23. OPEN CUT ROAD CROSSINGS FOR UTILITY TRENCHES ON EXISTING TRAVELED ROADWAY SHALL BE BACKFILLED ONLY WITH 5/8" MINUS CRUSHED ROCK AND MECHANICALLY COMPACTED (UNLESS OTHERWISE APPROVED BY THE CITY). FOR STREETS CLASSIFIED AS ARTERIALS OR COLLECTORS, BACKFILL FOR CROSSINGS SHALL BE CDF. CUTS INTO THE EXISTING ASPHALT SHALL BE NEAT LINE CUT WITH SAW OR JACKHAMMER IN A CONTINUOUS LINE. A TEMPORARY COLD MIX PATCH MUST BE PLACED IMMEDIATELY AFTER BACKFILL AND COMPACTION. A PERMANENT HOT MIX PATCH SHALL BE PLACED WITHIN 30 DAYS AND SHALL BE A MINIMUM OF 1" THICKER THAN THE ORIGINAL ASPHALT WITH A MINIMUM THICKNESS OF 2". SEE STANDARD D.02.
24. ALL DAMAGES INCURRED TO PUBLIC AND/OR PRIVATE PROPERTY BY THE CONTRACTOR DURING THE COURSE OF CONSTRUCTION SHALL BE PROMPTLY REPAIRED TO THE SATISFACTION OF THE CITY CONSTRUCTION INSPECTOR BEFORE PROJECT APPROVAL AND/OR THE RELEASE OF THE PROJECT'S PERFORMANCE BOND.
25. GROUT ALL SEAMS AND OPENINGS IN ALL INLETS, CATCH BASINS, AND MANHOLES. JETSET GROUT IS NOT ALLOWED.
26. WHEN WIDENING AN EXISTING ROADWAY WHERE AN EXISTING TYPE I CATCH BASIN WILL REMAIN IN THE TRAVEL LANE, THE EXISTING FRAME AND COVER SHALL BE REPLACED WITH A ROUND, LOCKING FRAME AND COVER.
27. FOR OTHER THAN SINGLE–FAMILY DWELLINGS, ALL EXPOSED OR READILY EXPOSED INDOOR STORM DRAINAGE PIPING/PLUMBING SHALL BE LABELED WITH THE WORDS "STORM DRAIN" WITH MINIMUM 2 INCH HIGH LETTERS.
28. RECYCLED CONCRETE SHALL NOT BE USED AROUND STORMWATER FACILITIES.

INFILTRATION AND LID FACILITIES PROTECTION NOTES

1. REDIRECT SHEET FLOW, BLOCK DRAIN INLETS AND/OR CURB OPENINGS IN PAVEMENT AND INSTALL FLOW DIVERSION MEASURES TO PREVENT CONSTRUCTION SILT LADEN WATER AND DEBRIS FROM ENTERING EXCAVATIONS AND FINISH SURFACES FOR INFILTRATION PONDS AND POROUS PAVEMENTS
2. WHERE AMENDED SOILS, INFILTRATION PONDS, AND POROUS PAVEMENTS ARE INSTALLED, THESE AREAS MUST BE PROTECTED AT ALL TIMES FROM BEING OVER COMPACTED. REMEDIATE AND TILL SOIL IN ACCORDANCE WITH OWNER'S GEOTECHNICAL ENGINEER REPRESENTATIVE REQUIREMENTS AT NO ADDITIONAL COST TO OWNER IN ORDER TO RESTORE INFILTRATION.
3. INSTALL FLOW DIVERSION MEASURES OUTSIDE OF THE CRITICAL ROOT ZONE OF TREES TO BE PROTECTED. AT NO TIME SHALL CONSTRUCTION STORMWATER BE DIRECTED TO TREES TO BE PROTECTED. CONSTRUCTION STORMWATER SHALL NOT POND WITHIN A TREE'S CRITICAL ROOT ZONE.
4. INFILTRATION PERFORMANCE TESTING IS REQUIRED FOLLOWING SUBGRADE PREPARATION TO VERIFY DESIGN INFILTRATION RATES FOR THE INFILTRATION PONDS AND ASPHALT TRAIL BETWEEN STA 12+00 AND STA 14+85. SEE SPECIAL PROVISION SECTION 2–06.

EITA NOTES

AN AUTOCAD® CIVIL 3D® 2017 FILE (FOR THE SOLE PURPOSE OF 2D HORIZONTAL LAYOUT) WILL BE PROVIDED TO THE CONTRACTOR AT THE BEGINNING OF THE PROJECT'S CONSTRUCTION. THE AUTOCAD FILE WILL PROVIDE FOR HORIZONTAL LAYOUT OF STORM DRAINAGE INFRASTRUCTURE, PAVING (TRAIL, SIDEWALK, CURBS), GRADING CONTOURS IN LANDSCAPE AREAS, SPOT ELEVATIONS, AND LANDSCAPING SHOWN ON PLAN VIEW OF THE GRADING AND DRAINAGE AND RESTORATION PLANS. PRIOR TO RELEASE OF AUTOCAD FILE, CONTRACTOR WILL BE REQUIRED TO SIGN AN ELECTRONIC INFORMATION TRANSFER AGREEMENT (EITA) FORM FROM MIG/SVR. PLEASE SUBMIT REQUEST FOR MIG/SVR'S EITA FORM THROUGH THE CITY'S PROJECT CONTACT ESTABLISHED FOR THE JOB. THE CITY'S PROJECT CONTACT WILL THEN NOTIFY MIG/SVR'S PROJECT MANAGER FOR A COPY OF THE EITA FORM. AFTER MIG/SVR HAS RECEIVED THE SIGNED EITA FORM, ALLOW UP TO SEVEN (7) BUSINESS DAYS FOR PREPARATION OF THE FILE BY MIG/SVR. IF DISCREPANCIES ARE OBSERVED BETWEEN THE AUTOCAD FILE PROVIDED AND INFORMATION SHOWN ON THE HARD COPY OF THE CONSTRUCTION DOCUMENTS, NOTIFY PROJECT CONTACT BY SUBMITTING A RFI.

Know what's below. Call before you dig.

CITY OF KIRKLAND
DEPARTMENT OF PUBLIC WORKS
123 FIFTH AVENUE KIRKLAND, WA 98033
(425) 587-3800 www.kirklandwa.gov

NO.	DATE	BY	APPR.	REVISION
0	2019/12/06	NP	DR	ISSUE FOR BID

NATHAN ALAN POLANSKI — STATE OF WASHINGTON — 38880 — REGISTERED PROFESSIONAL ENGINEER — 12-5-19

COWI | MIG | SvR

DR — DESIGNED BY:	2019/12/06 DATE
JA — DRAWN BY:	2019/12/06 DATE
KG — CHECKED BY:	2019/12/06 DATE

CITY OF KIRKLAND
TOTEM LAKE PEDESTRIAN BRIDGE

EROSION/SEDIMENT CONTROL AND STORM DRAINAGE NOTES

SHEET: TLC – C –170
SCALE: AS SHOWN
FILENAME: TLPB_170_Notes.dwg

File: G:\15c\15094c TLPB\Current\TLPB_170_Notes.dwg Save Date: Dec 05, 2019 10:55 AM Saved By: NATHANP

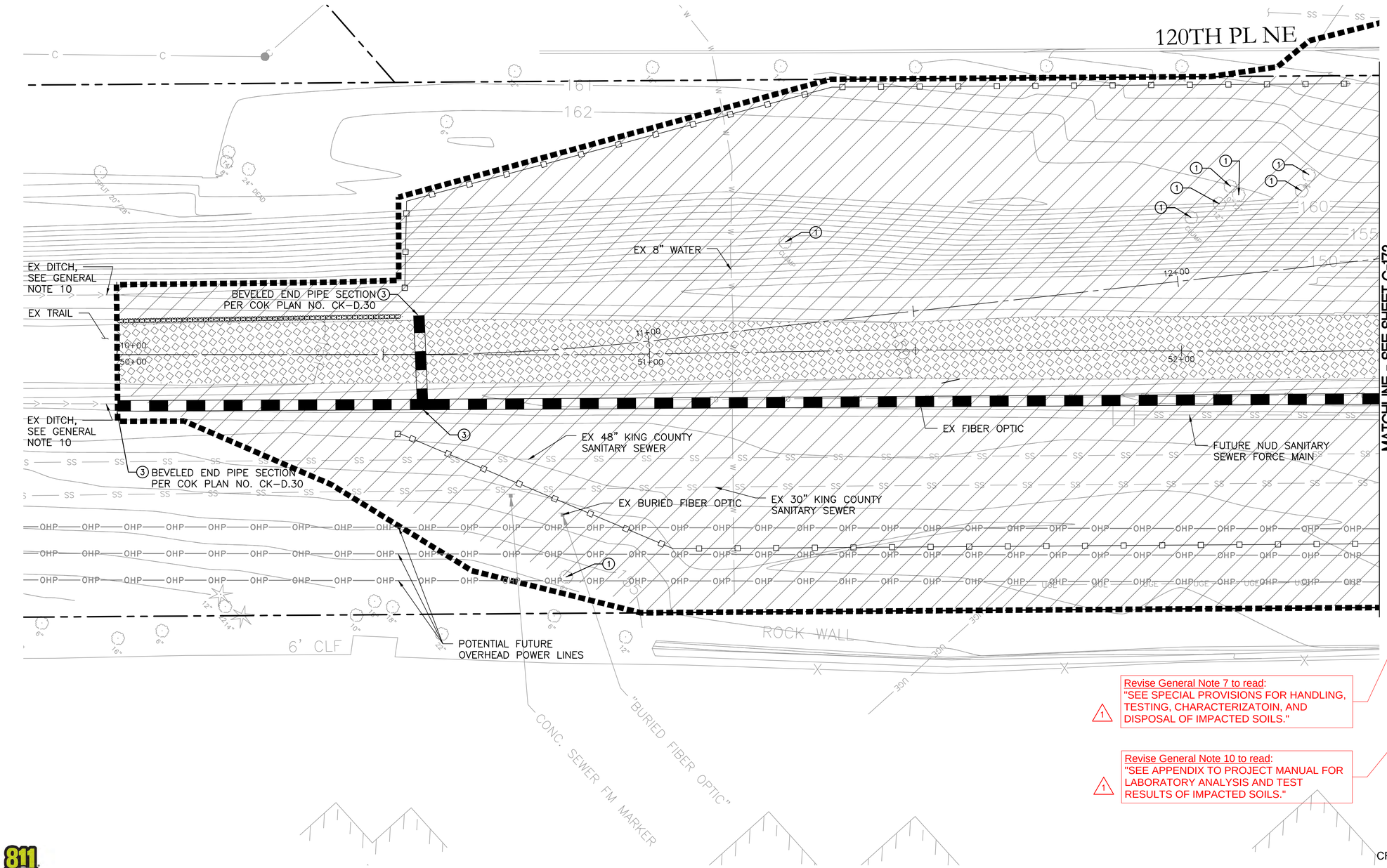

N

10' 5' 0 10' 20'

Scale In Feet

LEGEND

- RIGHT OF WAY LINE
- APPROXIMATE LIMITS OF WORK
- CLEAR & GRUB (SEE GENERAL NOTE 4)
- CLEAR & GRUB OUTSIDE LIMITS OF HIGH VISIBILITY SILT FENCE, SEE SPECIAL PROVISIONS
- REMOVE PAVEMENT
- REMOVE EXISTING GRAVEL SURFACING
- WATTLE (CK-E.10)
- HIGH VISIBILITY FENCE (WSDOT STD PLAN I-10.10-01)
- SILT FENCE (CK-E.03), UNLESS NOTED OTHERWISE
- TEMPORARY STORM DRAIN BYPASS
- FORCE MAIN / PUMPED STORMWATER

GENERAL NOTES

1. ALL UTILITIES DESCRIBED AS "FUTURE" ARE PART OF SEPARATE PROJECTS. THESE PLANS ASSUME ALL COMFORT INN BYPASS INFRASTRUCTURE IS INSTALLED PRIOR TO START OF CONSTRUCTION.
2. SEE SHEET C-170 FOR CITY OF KIRKLAND STANDARD EROSION/SEDIMENTATION CONTROL NOTES.
3. PROTECT EXISTING INFRASTRUCTURE, SITE FEATURES AND STRUCTURES NOT IDENTIFIED FOR REMOVAL.
4. INSTALL TEMPORARY SLOPE STABILIZATION (CK-E.06) WHERE SLOPE IS GREATER THAN 3H:1V.
5. NOT USED.
6. CONTRACTOR TO LOCATE AND PROTECT ALL EXISTING UTILITIES TO REMAIN.
7. SEE SPECIFICATIONS FOR HANDLING, CHARACTERIZATION, AND DISPOSAL OF POTENTIALLY IMPACTED SOILS.
8. CONFIRM STOCKPILING, LAYDOWN AREAS, AND ALL WORK WITHIN VICINITY OF KING COUNTY SANITARY SEWERS WITH ENGINEER PRIOR TO CONSTRUCTION.
9. REDIRECT DITCH FLOW AND SIZE TEMPORARY STORM DRAIN BYPASS TO CONVEY 100YR FLOW 13.9 CFS TO DOWNSTREAM STORM DRAIN SYSTEM.
10. SEE SPECIAL PROVISIONS AND HAZARDOUS MATERIALS REPORT IN PROJECT MANUAL APPENDIX FOR REQUIREMENTS FOR REMOVAL, HANDLING, AND DISPOSAL OF CONTAMINATED SOIL.

1 Revise General Note 7 to read: "SEE SPECIAL PROVISIONS FOR HANDLING, TESTING, CHARACTERIZATOIN, AND DISPOSAL OF IMPACTED SOILS."

1 Revise General Note 10 to read: "SEE APPENDIX TO PROJECT MANUAL FOR LABORATORY ANALYSIS AND TEST RESULTS OF IMPACTED SOILS."

CONSTRUCTION NOTES

1. REMOVE TREE
2. INLET PROTECTION (KC E.11)
3. TEMPORARY STORM DRAIN BYPASS, SEE GENERAL NOTE 9
4. REMOVE & SALVAGE EXISTING
5. REMOVE EXISTING

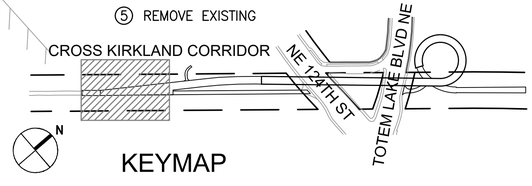

KEYMAP

Know what's below. Call before you dig.

CITY OF KIRKLAND
DEPARTMENT OF PUBLIC WORKS
123 FIFTH AVENUE KIRKLAND, WA 98033
(425) 587-3800 www.kirklandwa.gov

NO.	DATE	BY	APPR.	REVISION
1	2020/03/09	NP	ST	ADDENDUM 3
0	2019/12/06	NP	ST	ISSUE FOR BID

NATHAN ALAN POLANSKI, STATE OF WASHINGTON, REGISTERED PROFESSIONAL ENGINEER 43880, 12-5-19

COWI

MIG | SvR

ST	2019/12/06	DESIGNED BY: DATE
JA	2019/12/06	DRAWN BY: DATE
KG	2019/12/06	CHECKED BY: DATE

CITY OF KIRKLAND
TOTEM LAKE PEDESTRIAN BRIDGE

DEMOLITION AND EROSION CONTROL PLAN 1

SHEET: TLC – C –171

SCALE: AS SHOWN

FILENAME: TLPB_170_TESC-Demo.dwg

File: G:\15c\15094c TLPB\Current\TLPB_170_TESC-Demo.dwg Save Date: Dec 06, 2019 11:00 AM Saved By: JENNIFERA

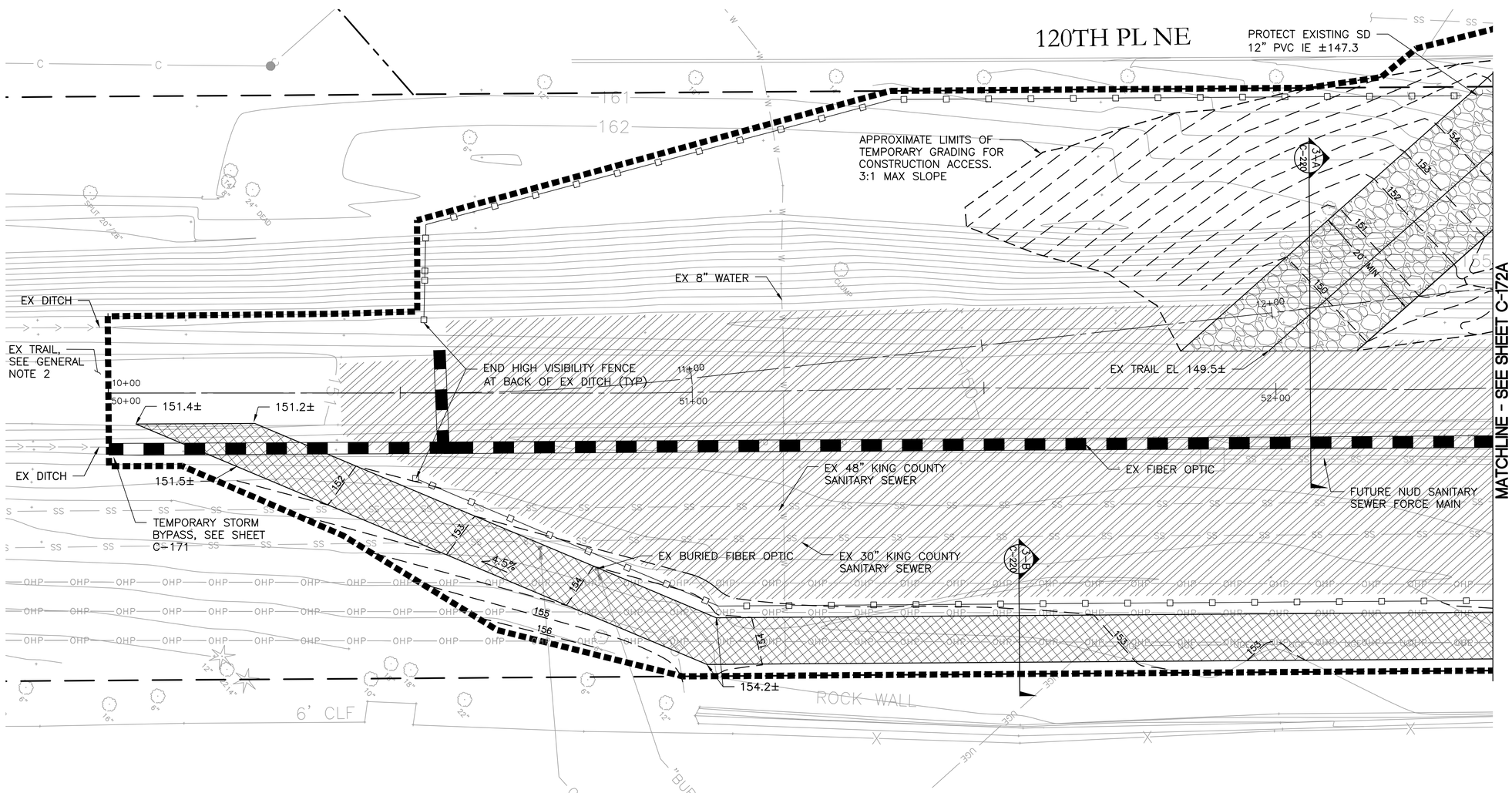

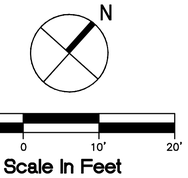

LEGEND

- RIGHT OF WAY LINE
- APPROXIMATE LIMITS OF WORK
- STABILIZED CONSTRUCTION ENTRANCE (CK-E.02) (SEE NOTE 2)
- TEMPORARY GRAVEL TRAIL PER 3-B / C-220
- QUARRY SPALLS FOR CONSTRUCTION LAYDOWN
- TEMPORARY STORM DRAIN BYPASS, SEE SHEETS C-171 TO C-173

GENERAL NOTES

1. SEE C-171 TO C-177 FOR DEMOLITION AND EROSION CONTROL PLANS.
2. CONTRACTOR TO COORDINATE CONSTRUCTION ENTRANCES AND EXITS WITH CITY OF KIRKLAND (SEE GENERAL NOTE 4). FOLLOWING CONSTRUCTION CONTRACTOR SHALL RESTORE DISTURBED AREAS OUTSIDE THE LIMITS OF WORK THAT ARE DISTURBED BY CONTRACTOR MEANS AND METHODS AND TEMPORARY CONSTRUCTION ACCESS INCLUDING BUT NOT LIMITED TO THE MEDIAN AND RECTANGULAR RAPID FLASHING BEACON (RRFB) AT 120TH AVE NE AND CRUSHED SURFACING FOR TRAIL ALONG THE CROSS KIRKLAND CORRIDOR.
3. PROVIDE TEMPORARY CHAIN LINK CONSTRUCTION FENCING TO SECURE THE WORK AREA AND MAINTAIN TEMPORARY TRAIL.
4. FOR AREAS OUTSIDE LIMITS OF WORK: AS A PART OF PROJECT TEMPORARY TRAFFIC CONTROL PROVIDE HIGH VISIBILITY FENCE, FLAGGERS, AND/OR OTHER TEMPORARY MEASURES TO CONTROL ACCESS TO THE CROSS KIRKLAND CORRIDOR ALONG TEMPORARY CONSTRUCTION ACCESS ROUTES FOR SAFETY OF PEOPLE WALKING AND BIKING ALONG TRAIL.

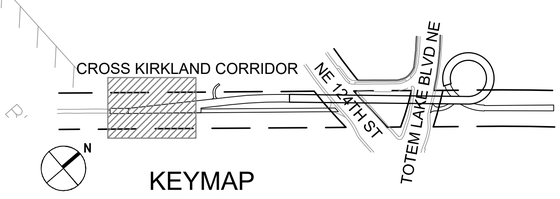

811 Know what's below. Call before you dig.

File: G:\15c\15094c TLPB\Current\TLPB_170A_TEMP ACCESS.dwg Save Date: Dec 06, 2019 10:57 AM Saved By: JENNIFERA

CITY OF KIRKLAND
DEPARTMENT OF PUBLIC WORKS
123 FIFTH AVENUE KIRKLAND, WA 98033
(425) 587-3800 www.kirklandwa.gov

NO.	DATE	BY	APPR.	REVISION
0	2019/12/06	NP	ST	ISSUE FOR BID

NATHAN ALAN POLANSKI — STATE OF WASHINGTON — 36880 — REGISTERED PROFESSIONAL ENGINEER — 12-5-19

COWI
MIG | SvR

ST 2019/12/06 — DESIGNED BY: DATE
JA 2019/12/06 — DRAWN BY: DATE
KG 2019/12/06 — CHECKED BY: DATE

CITY OF KIRKLAND
TOTEM LAKE PEDESTRIAN BRIDGE

CONSTRUCTION ACCESS AND
TEMPORARY TRAIL PLAN 1

SHEET: TLC-C-171A
SCALE: AS SHOWN
FILENAME: TLPB_170A_TEMP ACCESS.dwg

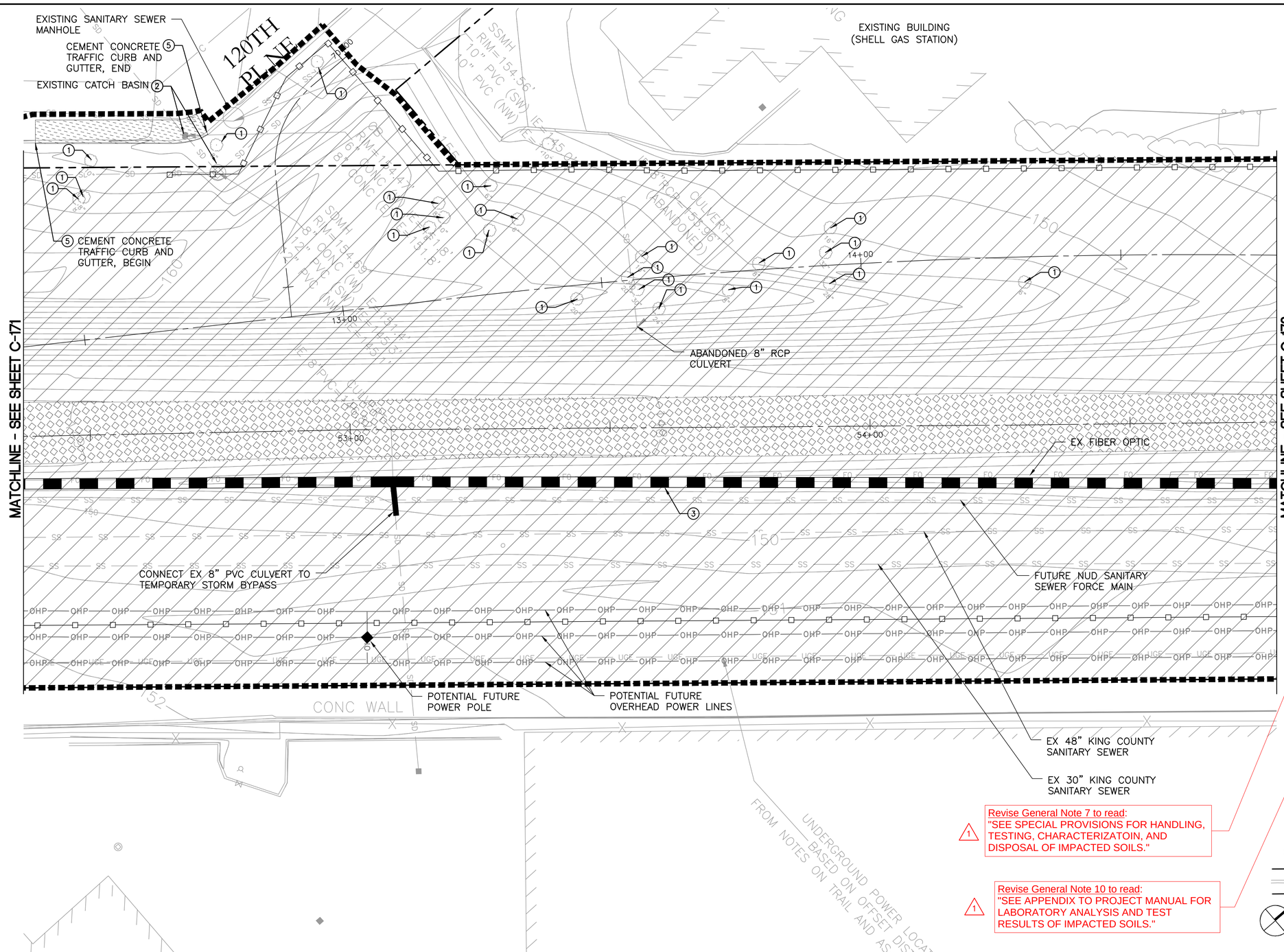

N

10' 5' 0 10' 20'

Scale In Feet

LEGEND

- RIGHT OF WAY LINE
- APPROXIMATE LIMITS OF WORK
- CLEAR & GRUB (SEE GENERAL NOTE 4)
- CLEAR & GRUB OUTSIDE LIMITS OF HIGH VISIBILITY SILT FENCE, SEE SPECIAL PROVISIONS
- REMOVE PAVEMENT
- REMOVE EXISTING GRAVEL SURFACING
- WATTLE (CK-E.10)
- HIGH VISIBILITY FENCE (WSDOT STD PLAN I-10.10-01)
- SILT FENCE (CK-E.03), UNLESS NOTED OTHERWISE
- TEMPORARY STORM DRAIN BYPASS
- FORCE MAIN / PUMPED STORMWATER

GENERAL NOTES

1. ALL UTILITIES DESCRIBED AS "FUTURE" ARE PART OF SEPARATE PROJECTS. THESE PLANS ASSUME ALL COMFORT INN BYPASS INFRASTRUCTURE IS INSTALLED PRIOR TO START OF CONSTRUCTION.
2. SEE SHEET C-170 FOR CITY OF KIRKLAND STANDARD EROSION/SEDIMENTATION CONTROL NOTES.
3. PROTECT EXISTING INFRASTRUCTURE, SITE FEATURES AND STRUCTURES NOT IDENTIFIED FOR REMOVAL.
4. INSTALL TEMPORARY SLOPE STABILIZATION (CK-E.06) WHERE SLOPE IS GREATER THAN 3H:1V.
5. NOT USED.
6. CONTRACTOR TO LOCATE AND PROTECT ALL EXISTING UTILITIES TO REMAIN.
7. SEE SPECIFICATIONS FOR HANDLING, CHARACTERIZATION, AND DISPOSAL OF POTENTIALLY IMPACTED SOILS.
8. CONFIRM STOCKPILING, LAYDOWN AREAS, AND ALL WORK WITHIN VICINITY OF KING COUNTY SANITARY SEWERS WITH ENGINEER PRIOR TO CONSTRUCTION.
9. REDIRECT DITCH FLOW AND SIZE TEMPORARY STORM DRAIN BYPASS TO CONVEY 100YR FLOW 13.9 CFS TO DOWNSTREAM STORM DRAIN SYSTEM.
10. SEE SPECIAL PROVISIONS AND HAZARDOUS MATERIALS REPORT IN PROJECT MANUAL APPENDIX FOR REQUIREMENTS FOR REMOVAL, HANDLING, AND DISPOSAL OF CONTAMINATED SOIL.

CONSTRUCTION NOTES

1. REMOVE TREE
2. INLET PROTECTION (KC E.11)
3. TEMPORARY STORM DRAIN BYPASS, SEE GENERAL NOTE 9
4. REMOVE & SALVAGE EXISTING
5. REMOVE EXISTING

1 Revise General Note 7 to read:
"SEE SPECIAL PROVISIONS FOR HANDLING, TESTING, CHARACTERIZATOIN, AND DISPOSAL OF IMPACTED SOILS."

1 Revise General Note 10 to read:
"SEE APPENDIX TO PROJECT MANUAL FOR LABORATORY ANALYSIS AND TEST RESULTS OF IMPACTED SOILS."

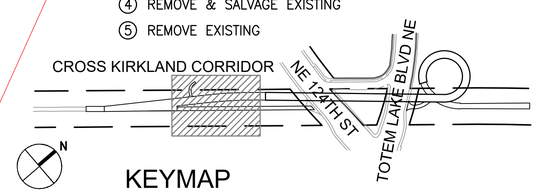

KEYMAP

811 Know what's below. Call before you dig.

File: G:\15c\15094c TLPB\Current\TLPB_170_TESC-Demo.dwg Save Date: Dec 06, 2019 11:00 AM Saved By: JENNIFERA

CITY OF KIRKLAND
DEPARTMENT OF PUBLIC WORKS
123 FIFTH AVENUE KIRKLAND, WA 98033
(425) 587-3800 www.kirklandwa.gov

NO.	DATE	BY	APPR.	REVISION
1	2020/03/09	NP	ST	ADDENDUM 3
0	2019/12/06	NP	ST	ISSUE FOR BID

NATHAN ALAN POLANSKI, STATE OF WASHINGTON, 48880, REGISTERED PROFESSIONAL ENGINEER, 12-5-19

COWI MIG SvR

ST	2019/12/06	DESIGNED BY: DATE
JA	2019/12/06	DRAWN BY: DATE
KG	2019/12/06	CHECKED BY: DATE

CITY OF KIRKLAND
TOTEM LAKE PEDESTRIAN BRIDGE

DEMOLITION AND EROSION CONTROL PLAN 2

SHEET: TLC – C –172
SCALE: AS SHOWN
FILENAME: TLPB_170_TESC-Demo.dwg

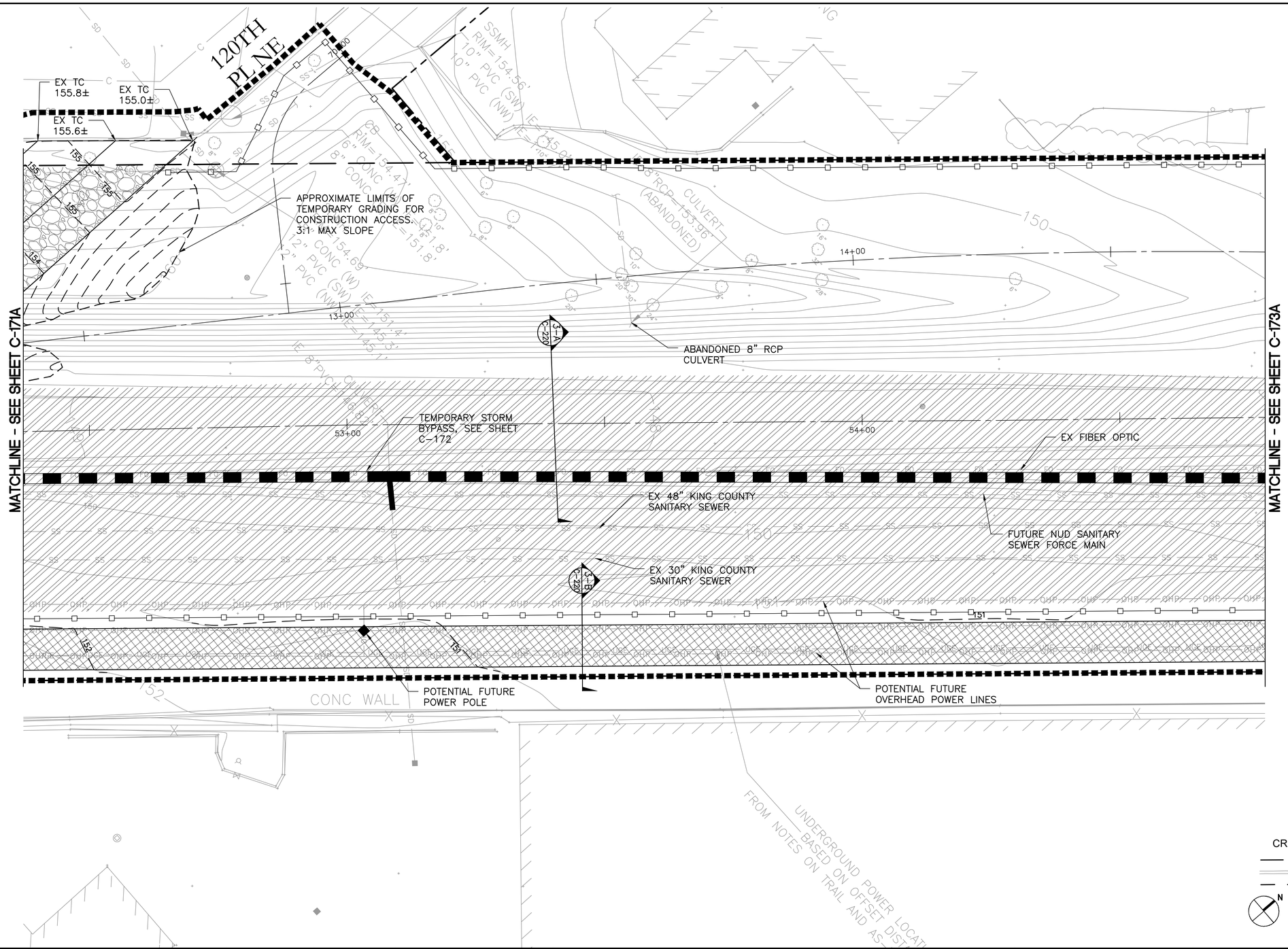

N

10' 5' 0 10' 20'

Scale In Feet

LEGEND

- RIGHT OF WAY LINE
- APPROXIMATE LIMITS OF WORK
- STABILIZED CONSTRUCTION ENTRANCE (CK-E.02) (SEE NOTE 2)
- TEMPORARY GRAVEL TRAIL PER 3-B C-220
- QUARRY SPALLS FOR CONSTRUCTION LAYDOWN
- TEMPORARY STORM DRAIN BYPASS, SEE SHEETS C-171 TO C-173

GENERAL NOTES

1. SEE C-171 TO C-177 FOR DEMOLITION AND EROSION CONTROL PLANS.
2. CONTRACTOR TO COORDINATE CONSTRUCTION ENTRANCES AND EXITS WITH CITY OF KIRKLAND (SEE GENERAL NOTE 4). FOLLOWING CONSTRUCTION CONTRACTOR SHALL RESTORE DISTURBED AREAS OUTSIDE THE LIMITS OF WORK THAT ARE DISTURBED BY CONTRACTOR MEANS AND METHODS AND TEMPORARY CONSTRUCTION ACCESS INCLUDING BUT NOT LIMITED TO THE MEDIAN AND RECTANGULAR RAPID FLASHING BEACON (RRFB) AT 120TH AVE NE AND CRUSHED SURFACING FOR TRAIL ALONG THE CROSS KIRKLAND CORRIDOR.
3. PROVIDE TEMPORARY CHAIN LINK CONSTRUCTION FENCING TO SECURE THE WORK AREA AND MAINTAIN TEMPORARY TRAIL.
4. FOR AREAS OUTSIDE LIMITS OF WORK: AS A PART OF PROJECT TEMPORARY TRAFFIC CONTROL PROVIDE HIGH VISIBILITY FENCE, FLAGGERS, AND/OR OTHER TEMPORARY MEASURES TO CONTROL ACCESS TO THE CROSS KIRKLAND CORRIDOR ALONG TEMPORARY CONSTRUCTION ACCESS ROUTES FOR SAFETY OF PEOPLE WALKING AND BIKING ALONG TRAIL.

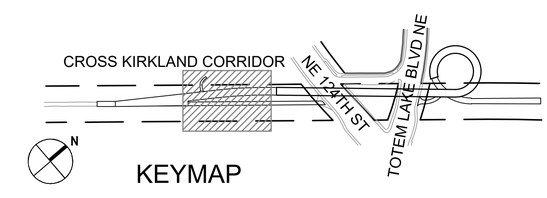

KEYMAP

811 Know what's below. Call before you dig.

File: G:\15c\15094c TLPB\Current\TLPB_170A_TEMP ACCESS.dwg Save Date: Dec 06, 2019 10:57 AM Saved By: JENNIFERA

CITY OF KIRKLAND
DEPARTMENT OF PUBLIC WORKS
123 FIFTH AVENUE KIRKLAND, WA 98033
(425) 587-3800 www.kirklandwa.gov

NO.	DATE	BY	APPR.	REVISION
0	2019/12/06	NP	ST	ISSUE FOR BID

NATHAN ALAN POLANSKI — STATE OF WASHINGTON — REGISTERED PROFESSIONAL ENGINEER — 12-5-19

COWI MIG SvR

ST 2019/12/06 DESIGNED BY: DATE
JA 2019/12/06 DRAWN BY: DATE
KG 2019/12/06 CHECKED BY: DATE

CITY OF KIRKLAND
TOTEM LAKE PEDESTRIAN BRIDGE

CONSTRUCTION ACCESS AND TEMPORARY TRAIL PLAN 2

SHEET: TLC-C-172A
SCALE: AS SHOWN
FILENAME: TLPB_170A_TEMP ACCESS.dwg

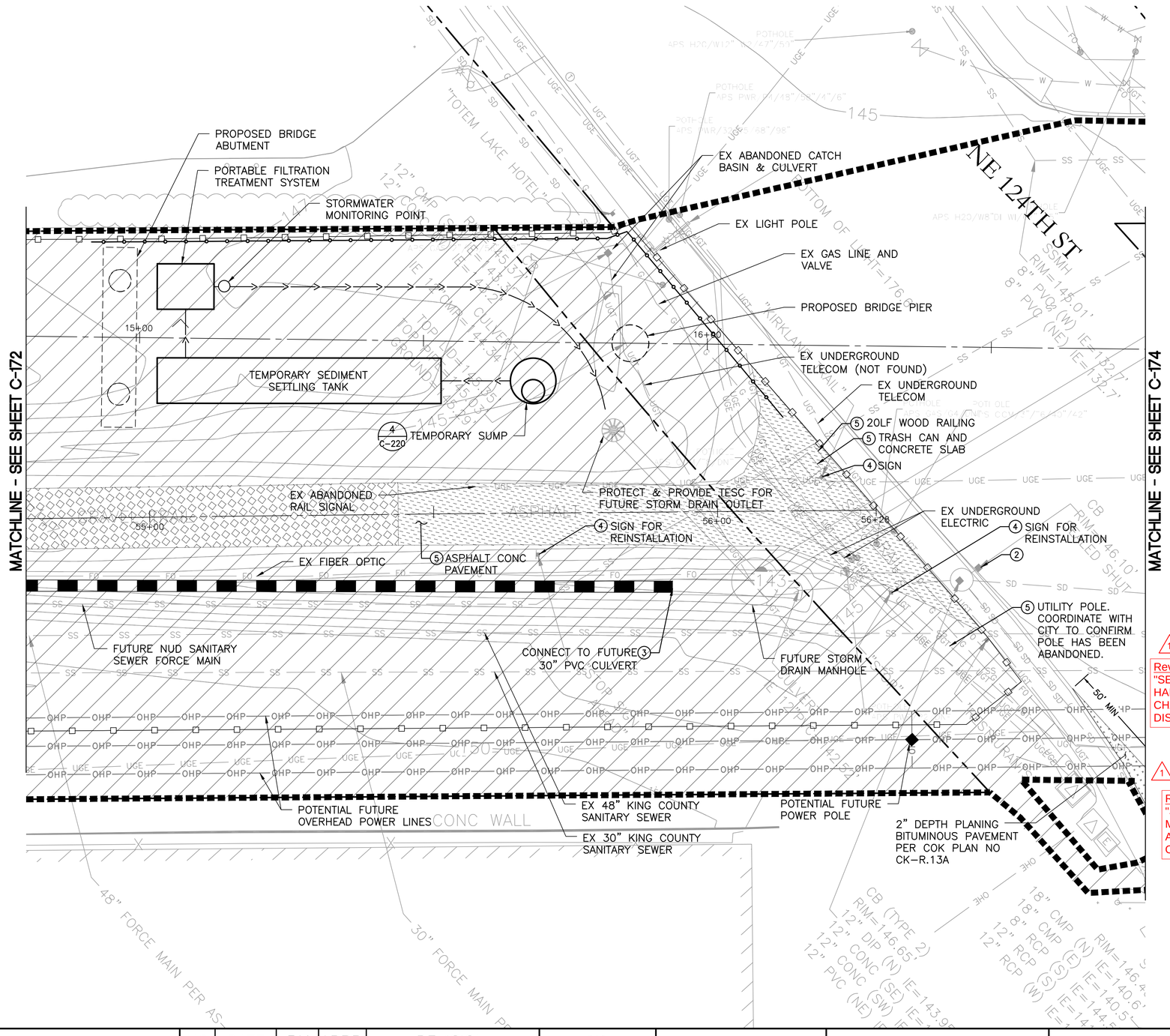

N

10' 5' 0 10' 20'

Scale In Feet

LEGEND

- RIGHT OF WAY LINE
- APPROXIMATE LIMITS OF WORK
- CLEAR & GRUB (SEE GENERAL NOTE 4)
- CLEAR & GRUB OUTSIDE LIMITS OF HIGH VISIBILITY SILT FENCE, SEE SPECIAL PROVISIONS
- REMOVE PAVEMENT
- REMOVE EXISTING GRAVEL SURFACING
- WATTLE (CK-E.10)
- HIGH VISIBILITY FENCE (WSDOT STD PLAN I-10.10-01)
- SILT FENCE (CK-E.03), UNLESS NOTED OTHERWISE
- TEMPORARY STORM DRAIN BYPASS
- FORCE MAIN / PUMPED STORMWATER

GENERAL NOTES

1. ALL UTILITIES DESCRIBED AS "FUTURE" ARE PART OF SEPARATE PROJECTS. THESE PLANS ASSUME ALL COMFORT INN BYPASS INFRASTRUCTURE IS INSTALLED PRIOR TO START OF CONSTRUCTION.
2. SEE SHEET C-170 FOR CITY OF KIRKLAND STANDARD EROSION/SEDIMENTATION CONTROL NOTES.
3. PROTECT EXISTING INFRASTRUCTURE, SITE FEATURES AND STRUCTURES NOT IDENTIFIED FOR REMOVAL.
4. INSTALL TEMPORARY SLOPE STABILIZATION (CK-E.06) WHERE SLOPE IS GREATER THAN 3H:1V.
5. NOT USED.
6. CONTRACTOR TO LOCATE AND PROTECT ALL EXISTING UTILITIES TO REMAIN.
7. SEE SPECIFICATIONS FOR HANDLING, CHARACTERIZATION, AND DISPOSAL OF POTENTIALLY IMPACTED SOILS.
8. CONFIRM STOCKPILING, LAYDOWN AREAS, AND ALL WORK WITHIN VICINITY OF KING COUNTY SANITARY SEWERS WITH ENGINEER PRIOR TO CONSTRUCTION.
9. REDIRECT DITCH FLOW AND SIZE TEMPORARY STORM DRAIN BYPASS TO CONVEY 100YR FLOW 13.9 CFS TO DOWNSTREAM STORM DRAIN SYSTEM.
10. SEE SPECIAL PROVISIONS AND HAZARDOUS MATERIALS REPORT IN PROJECT MANUAL APPENDIX FOR REQUIREMENTS FOR REMOVAL, HANDLING, AND DISPOSAL OF CONTAMINATED SOIL.

1 Revise General Note 7 to read: "SEE SPECIAL PROVISIONS FOR HANDLING, TESTING, CHARACTERIZATOIN, AND DISPOSAL OF IMPACTED SOILS."

1 Revise General Note 10 to read: "SEE APPENDIX TO PROJECT MANUAL FOR LABORATORY ANALYSIS AND TEST RESULTS OF IMPACTED SOILS."

CONSTRUCTION NOTES

1. REMOVE TREE
2. INLET PROTECTION (KC E.11)
3. TEMPORARY STORM DRAIN BYPASS, SEE GENERAL NOTE 9
4. REMOVE & SALVAGE EXISTING
5. REMOVE EXISTING

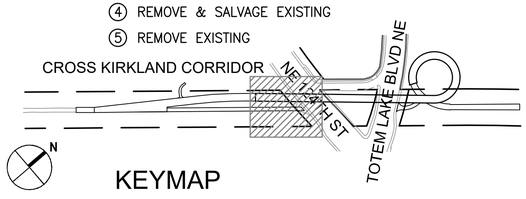

KEYMAP

Know what's below. Call before you dig.

CITY OF KIRKLAND
DEPARTMENT OF PUBLIC WORKS
123 FIFTH AVENUE KIRKLAND, WA 98033
(425) 587-3800 www.kirklandwa.gov

NO.	DATE	BY	APPR.	REVISION
1	2020/03/09	NP	ST	ADDENDUM 3
0	2019/12/06	NP	ST	ISSUE FOR BID

NATHAN ALAN POLANSKI — STATE OF WASHINGTON — REGISTERED PROFESSIONAL ENGINEER — 12-5-19

COWI MIG SvR

ST	2019/12/06	DESIGNED BY: DATE
JA	2019/12/06	DRAWN BY: DATE
KG	2019/12/06	CHECKED BY: DATE

CITY OF KIRKLAND
TOTEM LAKE PEDESTRIAN BRIDGE

DEMOLITION AND EROSION CONTROL PLAN 3

SHEET: TLC – C –173

SCALE: AS SHOWN

FILENAME: TLPB_170_TESC-Demo.dwg

File: G:\15c\15094c TLPB\Current\TLPB_170_TESC-Demo.dwg Save Date: Dec 06, 2019 11:00 AM Saved By: JENNIFERA

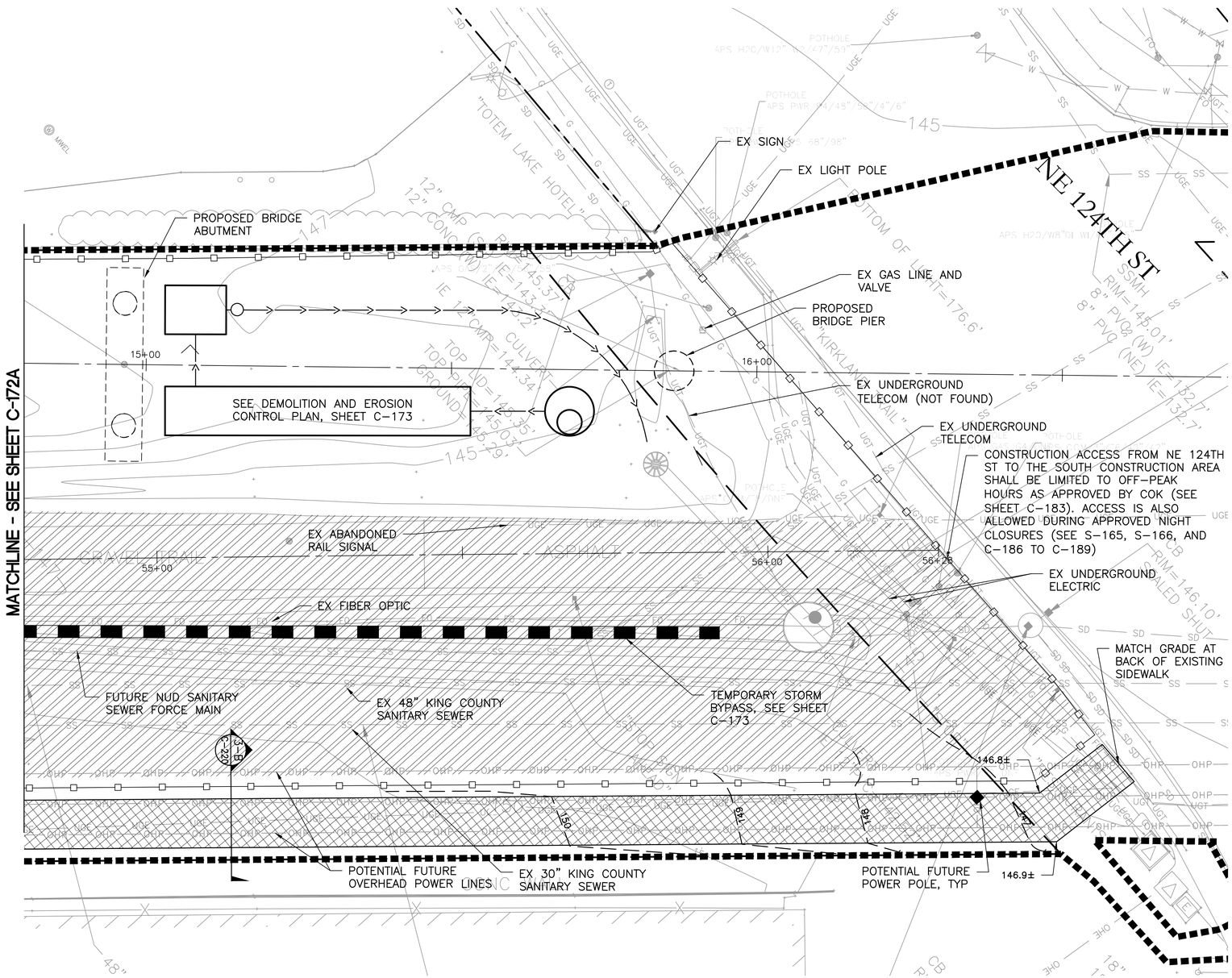

N

10' 5' 0 10' 20'

Scale In Feet

LEGEND

- RIGHT OF WAY LINE
- APPROXIMATE LIMITS OF WORK
- STABILIZED CONSTRUCTION ENTRANCE (CK-E.02) (SEE NOTE 2)
- TEMPORARY GRAVEL TRAIL PER 3-B / C-220
- QUARRY SPALLS FOR CONSTRUCTION LAYDOWN
- TEMPORARY STORM DRAIN BYPASS, SEE SHEETS C-171 TO C-173

GENERAL NOTES

1. SEE C-171 TO C-177 FOR DEMOLITION AND EROSION CONTROL PLANS.
2. CONTRACTOR TO COORDINATE CONSTRUCTION ENTRANCES AND EXITS WITH CITY OF KIRKLAND (SEE GENERAL NOTE 4). FOLLOWING CONSTRUCTION CONTRACTOR SHALL RESTORE DISTURBED AREAS OUTSIDE THE LIMITS OF WORK THAT ARE DISTURBED BY CONTRACTOR MEANS AND METHODS AND TEMPORARY CONSTRUCTION ACCESS INCLUDING BUT NOT LIMITED TO THE MEDIAN AND RECTANGULAR RAPID FLASHING BEACON (RRFB) AT 120TH AVE NE AND CRUSHED SURFACING FOR TRAIL ALONG THE CROSS KIRKLAND CORRIDOR.
3. PROVIDE TEMPORARY CHAIN LINK CONSTRUCTION FENCING TO SECURE THE WORK AREA AND MAINTAIN TEMPORARY TRAIL.
4. FOR AREAS OUTSIDE LIMITS OF WORK: AS A PART OF PROJECT TEMPORARY TRAFFIC CONTROL PROVIDE HIGH VISIBILITY FENCE, FLAGGERS, AND/OR OTHER TEMPORARY MEASURES TO CONTROL ACCESS TO THE CROSS KIRKLAND CORRIDOR ALONG TEMPORARY CONSTRUCTION ACCESS ROUTES FOR SAFETY OF PEOPLE WALKING AND BIKING ALONG TRAIL.

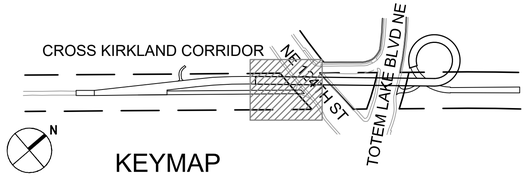

KEYMAP

811 Know what's below. Call before you dig.

File: G:\15c\15094c TLPB\Current\TLPB_170A_TEMP ACCESS.dwg Save Date: Dec 06, 2019 10:57 AM Saved By: JENNIFERA

CITY OF KIRKLAND WASHINGTON

CITY OF KIRKLAND
DEPARTMENT OF PUBLIC WORKS
123 FIFTH AVENUE KIRKLAND, WA 98033
(425) 587-3800 www.kirklandwa.gov

NO.	DATE	BY	APPR.	REVISION
0	2019/12/06	NP	ST	ISSUE FOR BID

NATHAN ALAN POLANSKI, STATE OF WASHINGTON, REGISTERED PROFESSIONAL ENGINEER, 12-5-19

COWI MIG SvR

ST 2019/12/06 DESIGNED BY: DATE
JA 2019/12/06 DRAWN BY: DATE
KG 2019/12/06 CHECKED BY: DATE

CITY OF KIRKLAND
TOTEM LAKE PEDESTRIAN BRIDGE

CONSTRUCTION ACCESS AND TEMPORARY TRAIL PLAN 3

SHEET: TLC-C-173A
SCALE: AS SHOWN
FILENAME: TLPB_170A_TEMP ACCESS.dwg

SURVEY NOTE:

1) EXISTING CONDITIONS SHOWN ALONG TOTEM LAKE BLVD NE (CURB ALIGNMENT, SIDEWALK, STRIPING AND DRAINAGE STRUCTURES) ARE BASED ON PROPOSED IMPROVEMENTS SHOWN IN THE BID SET FOR THE CITY'S TOTEM LAKE GATEWAY PROJECT (CIP NO. STC006050).

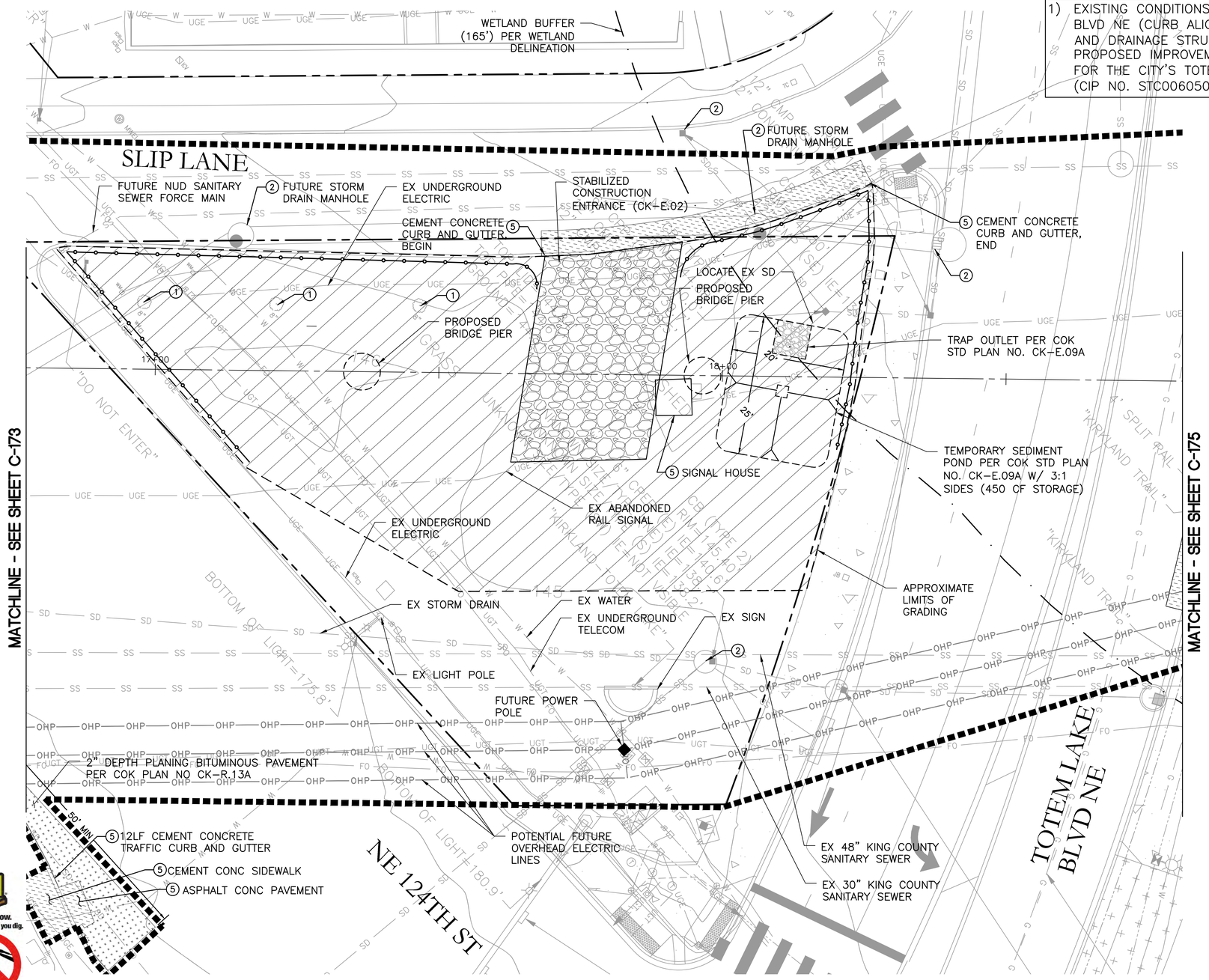

N

10' 5' 0 10' 20'

Scale In Feet

LEGEND

- RIGHT OF WAY LINE
- APPROXIMATE LIMITS OF WORK
- CLEAR & GRUB (SEE GENERAL NOTE 4)
- CLEAR & GRUB OUTSIDE LIMITS OF HIGH VISIBILITY SILT FENCE, SEE SPECIAL PROVISIONS
- REMOVE PAVEMENT
- REMOVE EXISTING GRAVEL SURFACING
- WATTLE (CK-E.10)
- HIGH VISIBILITY FENCE (WSDOT STD PLAN I-10.10-01)
- SILT FENCE (CK-E.03), UNLESS NOTED OTHERWISE
- TEMPORARY STORM DRAIN BYPASS
- FORCE MAIN / PUMPED STORMWATER

GENERAL NOTES

1. ALL UTILITIES DESCRIBED AS "FUTURE" ARE PART OF SEPARATE PROJECTS. THESE PLANS ASSUME ALL COMFORT INN BYPASS INFRASTRUCTURE IS INSTALLED PRIOR TO START OF CONSTRUCTION.
2. SEE SHEET C-170 FOR CITY OF KIRKLAND STANDARD EROSION/SEDIMENTATION CONTROL NOTES.
3. PROTECT EXISTING INFRASTRUCTURE, SITE FEATURES AND STRUCTURES NOT IDENTIFIED FOR REMOVAL.
4. INSTALL TEMPORARY SLOPE STABILIZATION (CK-E.06) WHERE SLOPE IS GREATER THAN 3H:1V.
5. NOT USED.
6. CONTRACTOR TO LOCATE AND PROTECT ALL EXISTING UTILITIES TO REMAIN.
7. SEE SPECIFICATIONS FOR HANDLING, CHARACTERIZATION, AND DISPOSAL OF POTENTIALLY IMPACTED SOILS.
8. CONFIRM STOCKPILING, LAYDOWN AREAS, AND ALL WORK WITHIN VICINITY OF KING COUNTY SANITARY SEWERS WITH ENGINEER PRIOR TO CONSTRUCTION.
9. REDIRECT DITCH FLOW AND SIZE TEMPORARY STORM DRAIN BYPASS TO CONVEY 100YR FLOW 13.9 CFS TO DOWNSTREAM STORM DRAIN SYSTEM.
10. SEE SPECIAL PROVISIONS AND HAZARDOUS MATERIALS REPORT IN PROJECT MANUAL APPENDIX FOR REQUIREMENTS FOR REMOVAL, HANDLING, AND DISPOSAL OF CONTAMINATED SOIL.

1 Revise General Note 7 to read: "SEE SPECIAL PROVISIONS FOR HANDLING, TESTING, CHARACTERIZATOIN, AND DISPOSAL OF IMPACTED SOILS."

1 Revise General Note 10 to read: "SEE APPENDIX TO PROJECT MANUAL FOR LABORATORY ANALYSIS AND TEST RESULTS OF IMPACTED SOILS."

CONSTRUCTION NOTES

1. REMOVE TREE
2. INLET PROTECTION (KC E.11)
3. TEMPORARY STORM DRAIN BYPASS, SEE GENERAL NOTE 9
4. REMOVE & SALVAGE EXISTING
5. REMOVE EXISTING

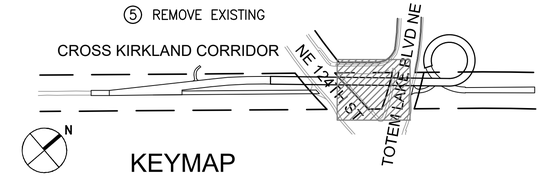

Know what's below. Call before you dig.

File: G:\15c\15094c TLPB\Current\TLPB_170_TESC-Demo.dwg Save Date: Dec 06, 2019 11:00 AM Saved By: JENNIFERA

CITY OF KIRKLAND
DEPARTMENT OF PUBLIC WORKS
123 FIFTH AVENUE KIRKLAND, WA 98033
(425) 587-3800 www.kirklandwa.gov

NO.	DATE	BY	APPR.	REVISION
1	2020/03/09	NP	ST	ADDENDUM 3
0	2019/12/06	NP	ST	ISSUE FOR BID

NATHAN ALAN POLANSKI, STATE OF WASHINGTON, REGISTERED PROFESSIONAL ENGINEER 38506 12-5-19

COWI MIG SvR

ST 2019/12/06 DESIGNED BY: DATE
JA 2019/12/06 DRAWN BY: DATE
KG 2019/12/06 CHECKED BY: DATE

CITY OF KIRKLAND
TOTEM LAKE PEDESTRIAN BRIDGE

DEMOLITION AND EROSION CONTROL PLAN 4

SHEET: TLC – C –174
SCALE: AS SHOWN
FILENAME: TLPB_170_TESC-Demo.dwg

MATCHLINE - SEE SHEET C-176

MATCHLINE - SEE SHEET C-174

MATCHLINE - SEE SHEET C-177

TOTEM LAKE BLVD NE

(2) FUTURE STORM DRAIN MANHOLE
EX 8" SANITARY SEWER
PROPOSED BRIDGE ABUTMENT
EX 14" SANITARY SEWER
SURVEYED WETLAND BOUNDARY
12" DEEP 6" BOTTOM WIDTH INTERCEPTOR SWALE W/ 3:1 SIDE SLOPE, TYP OF 2
PROPOSED BRIDGE PIER
250 LF HIGH VISIBILITY SILT FENCE
EX SEWER MAINTENANCE HOLE, PROTECT IN PLACE
EX 15" SANITARY SEWER
TEMPORARY SUMP (4) C-220
PROPOSED BRIDGE PIER
(5) ASPHALT PAVEMENT
(5) CEMENT CONCRETE TRAFFIC CURB AND GUTTER, END
PROPOSED BRIDGE PIER
TEMPORARY SEDIMENT SETTLING TANK
LOCATE EX GAS
PORTABLE FILTRATION TREATMENT SYSTEM
OVERHEAD POWER LINES SHALL REMAIN ENERGIZED AT ALL TIMES
(4) SIGN
PROPOSED BRIDGE PIER
STABILIZED CONSTRUCTION ENTRANCE (CK-E.02)
(4) SIGN FOR REINSTALLATION
EX SPLIT RAIL FENCE
(4) SIGN FOR REINSTALLATION
(4) SIGN
(5) 10LF WOOD RAILING
(5) ASPHALT CONC PAVEMENT
EX FIBER OPTIC
CONTRACTOR TO COORDINATE CONSTRUCTION ENTRANCES AND EXITS WITH CITY OF KIRKLAND
(5) CEMENT CONC SIDEWALK
(5) CEMENT CONCRETE TRAFFIC CURB AND GUTTER, BEGIN
CEMENT CONC SIDEWALK (5)
EX 30" KING COUNTY SANITARY SEWER
SEE GENERAL NOTE 8
CEMENT CONCRETE TRAFFIC CURB AND GUTTER, BEGIN (5)
POTENTIAL FUTURE OVERHEAD POWER LINES
STORMWATER MONITORING POINT
EX 48" KING COUNTY SANITARY SEWER
EX STORM DRAIN
3' SPLIT RAIL
3' SPLIT RAIL

19+00 20+00 23+00 24+00 25+00 25+25 60+00

N

10' 5' 0 10' 20'
Scale In Feet

LEGEND

- RIGHT OF WAY LINE
- APPROXIMATE LIMITS OF WORK
- CLEAR & GRUB (SEE GENERAL NOTE 4)
- CLEAR & GRUB OUTSIDE LIMITS OF HIGH VISIBILITY SILT FENCE, SEE SPECIAL PROVISIONS
- REMOVE PAVEMENT
- REMOVE EXISTING GRAVEL SURFACING
- WATTLE (CK-E.10)
- HIGH VISIBILITY FENCE (WSDOT STD PLAN I-10.10-01)
- SILT FENCE (CK-E.03), UNLESS NOTED OTHERWISE
- TEMPORARY STORM DRAIN BYPASS
- FORCE MAIN / PUMPED STORMWATER

GENERAL NOTES

1. ALL UTILITIES DESCRIBED AS "FUTURE" ARE PART OF SEPARATE PROJECTS. THESE PLANS ASSUME ALL COMFORT INN BYPASS INFRASTRUCTURE IS INSTALLED PRIOR TO START OF CONSTRUCTION.
2. SEE SHEET C-170 FOR CITY OF KIRKLAND STANDARD EROSION/SEDIMENTATION CONTROL NOTES.
3. PROTECT EXISTING INFRASTRUCTURE, SITE FEATURES AND STRUCTURES NOT IDENTIFIED FOR REMOVAL.
4. INSTALL TEMPORARY SLOPE STABILIZATION (CK-E.06) WHERE SLOPE IS GREATER THAN 3H:1V.
5. NOT USED.
6. CONTRACTOR TO LOCATE AND PROTECT ALL EXISTING UTILITIES TO REMAIN.
7. SEE SPECIFICATIONS FOR HANDLING, CHARACTERIZATION, AND DISPOSAL OF POTENTIALLY IMPACTED SOILS.
8. CONFIRM STOCKPILING, LAYDOWN AREAS, AND ALL WORK WITHIN VICINITY OF KING COUNTY SANITARY SEWERS WITH ENGINEER PRIOR TO CONSTRUCTION.
9. REDIRECT DITCH FLOW AND SIZE TEMPORARY STORM DRAIN BYPASS TO CONVEY 100YR FLOW 13.9 CFS TO DOWNSTREAM STORM DRAIN SYSTEM.
10. SEE SPECIAL PROVISIONS AND HAZARDOUS MATERIALS REPORT IN PROJECT MANUAL APPENDIX FOR REQUIREMENTS FOR REMOVAL, HANDLING, AND DISPOSAL OF CONTAMINATED SOIL.

CONSTRUCTION NOTES

1. REMOVE TREE
2. INLET PROTECTION (KC E.11)
3. TEMPORARY STORM DRAIN BYPASS, SEE GENERAL NOTE 9
4. REMOVE & SALVAGE EXISTING
5. REMOVE EXISTING

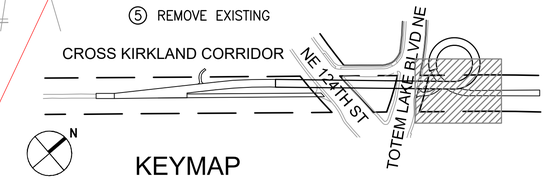

SURVEY NOTE:

1) EXISTING CONDITIONS SHOWN ALONG TOTEM LAKE BLVD NE (CURB ALIGNMENT, SIDEWALK, STRIPING AND DRAINAGE STRUCTURES) ARE BASED ON PROPOSED IMPROVEMENTS SHOWN IN THE BID SET FOR THE CITY'S TOTEM LAKE GATEWAY PROJECT (CIP NO. STC006050).

1 Revise General Note 7 to read: "SEE SPECIAL PROVISIONS FOR HANDLING, TESTING, CHARACTERIZATOIN, AND DISPOSAL OF IMPACTED SOILS."

1 Revise General Note 10 to read: "SEE APPENDIX TO PROJECT MANUAL FOR LABORATORY ANALYSIS AND TEST RESULTS OF IMPACTED SOILS."

811 Know what's below. Call before you dig.

CITY OF KIRKLAND
DEPARTMENT OF PUBLIC WORKS
123 FIFTH AVENUE KIRKLAND, WA 98033
(425) 587-3800 www.kirklandwa.gov

NO.	DATE	BY	APPR.	REVISION
1	2020/03/09	NP	ST	ADDENDUM 3
0	2019/12/06	NP	ST	ISSUE FOR BID

NATHAN ALAN POLANSKI, STATE OF WASHINGTON, REGISTERED PROFESSIONAL ENGINEER

COWI MIG SvR

ST	2019/12/06	DESIGNED BY: DATE
JA	2019/12/06	DRAWN BY: DATE
KG	2019/12/06	CHECKED BY: DATE

CITY OF KIRKLAND
TOTEM LAKE PEDESTRIAN BRIDGE

DEMOLITION AND EROSION CONTROL PLAN 5

SHEET: TLC – C –175
SCALE: AS SHOWN
FILENAME: TLPB_170_TESC-Demo.dwg

File: G:\15c\15094c TLPB\Current\TLPB_170_TESC-Demo.dwg Save Date: Dec 06, 2019 11:00 AM Saved By: JENNIFERA

SURVEY NOTE:

1) EXISTING CONDITIONS SHOWN ALONG TOTEM LAKE BLVD NE (CURB ALIGNMENT, SIDEWALK, STRIPING AND DRAINAGE STRUCTURES) ARE BASED ON PROPOSED IMPROVEMENTS SHOWN IN THE BID SET FOR THE CITY'S TOTEM LAKE GATEWAY PROJECT (CIP NO. STC006050).

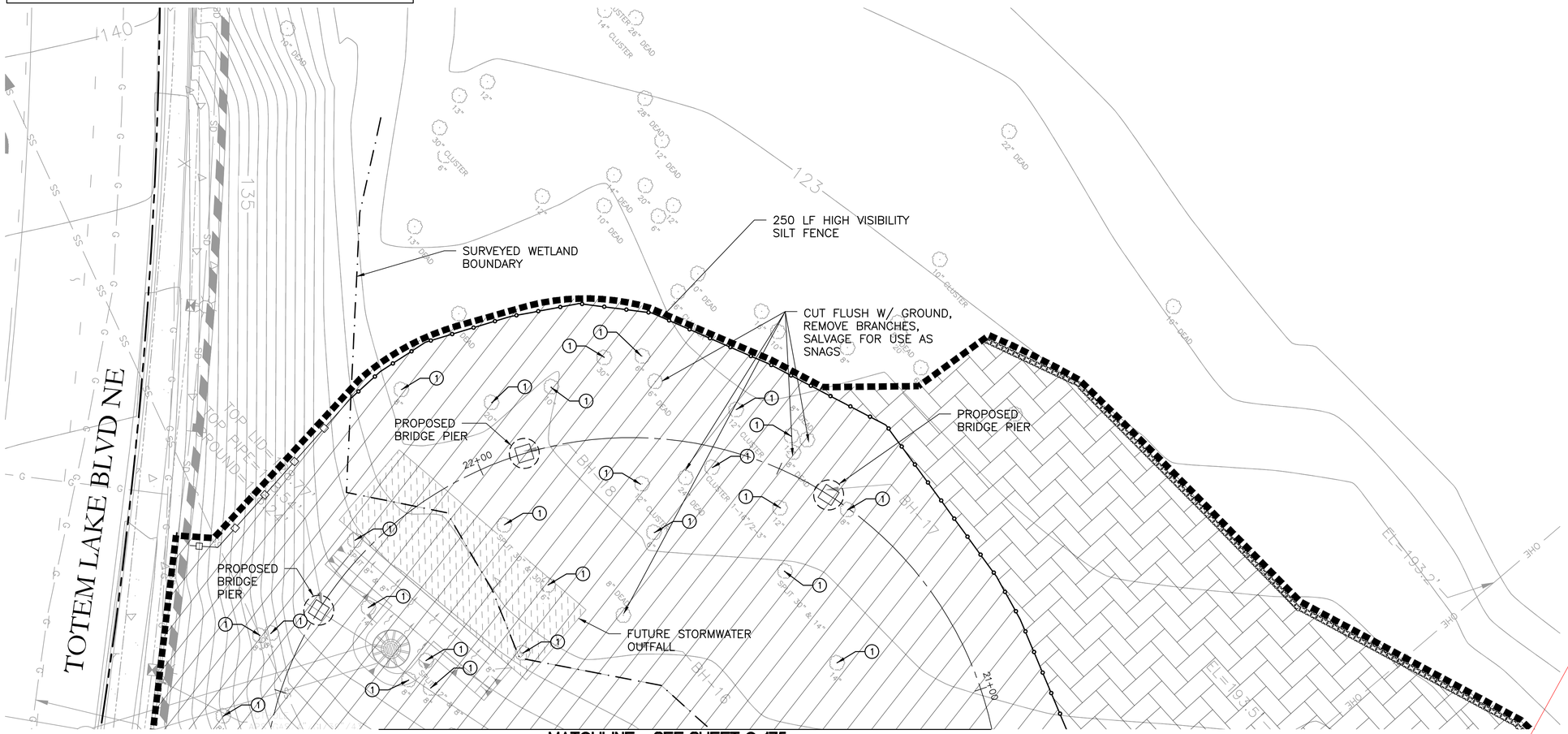

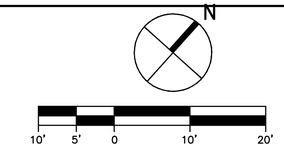

LEGEND

- RIGHT OF WAY LINE
- APPROXIMATE LIMITS OF WORK
- CLEAR & GRUB (SEE GENERAL NOTE 4)
- CLEAR & GRUB OUTSIDE LIMITS OF HIGH VISIBILITY SILT FENCE, SEE SPECIAL PROVISIONS
- REMOVE PAVEMENT
- REMOVE EXISTING GRAVEL SURFACING
- WATTLE (CK–E.10)
- HIGH VISIBILITY FENCE (WSDOT STD PLAN I–10.10–01)
- SILT FENCE (CK–E.03), UNLESS NOTED OTHERWISE
- TEMPORARY STORM DRAIN BYPASS
- FORCE MAIN / PUMPED STORMWATER

GENERAL NOTES

1. ALL UTILITIES DESCRIBED AS "FUTURE" ARE PART OF SEPARATE PROJECTS. THESE PLANS ASSUME ALL COMFORT INN BYPASS INFRASTRUCTURE IS INSTALLED PRIOR TO START OF CONSTRUCTION.
2. SEE SHEET C–170 FOR CITY OF KIRKLAND STANDARD EROSION/SEDIMENTATION CONTROL NOTES.
3. PROTECT EXISTING INFRASTRUCTURE, SITE FEATURES AND STRUCTURES NOT IDENTIFIED FOR REMOVAL.
4. INSTALL TEMPORARY SLOPE STABILIZATION (CK–E.06) WHERE SLOPE IS GREATER THAN 3H:1V.
5. NOT USED.
6. CONTRACTOR TO LOCATE AND PROTECT ALL EXISTING UTILITIES TO REMAIN.
7. SEE SPECIFICATIONS FOR HANDLING, CHARACTERIZATION, AND DISPOSAL OF POTENTIALLY IMPACTED SOILS.
8. CONFIRM STOCKPILING, LAYDOWN AREAS, AND ALL WORK WITHIN VICINITY OF KING COUNTY SANITARY SEWERS WITH ENGINEER PRIOR TO CONSTRUCTION.
9. REDIRECT DITCH FLOW AND SIZE TEMPORARY STORM DRAIN BYPASS TO CONVEY 100YR FLOW 13.9 CFS TO DOWNSTREAM STORM DRAIN SYSTEM.
10. SEE SPECIAL PROVISIONS AND HAZARDOUS MATERIALS REPORT IN PROJECT MANUAL APPENDIX FOR REQUIREMENTS FOR REMOVAL, HANDLING, AND DISPOSAL OF CONTAMINATED SOIL.

CONSTRUCTION NOTES

1. REMOVE TREE
2. INLET PROTECTION (KC E.11)
3. TEMPORARY STORM DRAIN BYPASS, SEE GENERAL NOTE 9
4. REMOVE & SALVAGE EXISTING
5. REMOVE EXISTING

1 Revise General Note 7 to read: "SEE SPECIAL PROVISIONS FOR HANDLING, TESTING, CHARACTERIZATOIN, AND DISPOSAL OF IMPACTED SOILS."

1 Revise General Note 10 to read: "SEE APPENDIX TO PROJECT MANUAL FOR LABORATORY ANALYSIS AND TEST RESULTS OF IMPACTED SOILS."

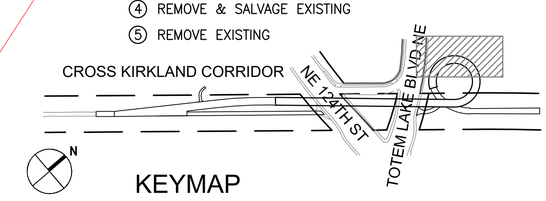

Know what's below. Call before you dig.

CITY OF KIRKLAND
DEPARTMENT OF PUBLIC WORKS
123 FIFTH AVENUE KIRKLAND, WA 98033
(425) 587-3800 www.kirklandwa.gov

NO.	DATE	BY	APPR.	REVISION
1	2020/03/09	NP	ST	ADDENDUM 3
0	2019/12/06	NP	ST	ISSUE FOR BID

NATHAN ALAN POLANSKI, STATE OF WASHINGTON, REGISTERED PROFESSIONAL ENGINEER, 12-5-19

COWI MIG SvR

ST 2019/12/06 DESIGNED BY: DATE
JA 2019/12/06 DRAWN BY: DATE
KG 2019/12/06 CHECKED BY: DATE

CITY OF KIRKLAND
TOTEM LAKE PEDESTRIAN BRIDGE

DEMOLITION AND EROSION CONTROL PLAN 6

SHEET: TLC – C –176
SCALE: AS SHOWN
FILENAME: TLPB_170_TESC–Demo.dwg

File: G:\15c\15094c TLPB\Current\TLPB_170_TESC–Demo.dwg Save Date: Dec 06, 2019 11:00 AM Saved By: JENNIFERA

SURVEY AND SHEET NOTES:

1) NO SURVEY NORTH OF TRAIL IMPROVEMENTS: ACTUAL LIMITS OF CLEARING AND GRUBBING TO BE COORDINATED WITH CITY. FOR PURPOSES OF BIDDING, THE AREAS SHOWN ARE INCLUDED IN THE 2.6 ACRES OF CLEARING AND GRUBBING.
2) NOTE SCALE CHANGE AT MATCHLINE ON THIS SHEET.
3) KING COUNTY SEWER MAINS SHOWN ON THIS PLAN ARE BEYOND SURVEY LIMITS AND BASED ON GIS INFORMATION. LOCATION SHOWN IS APPROXIMATE. SEE GENERAL NOTE 8.

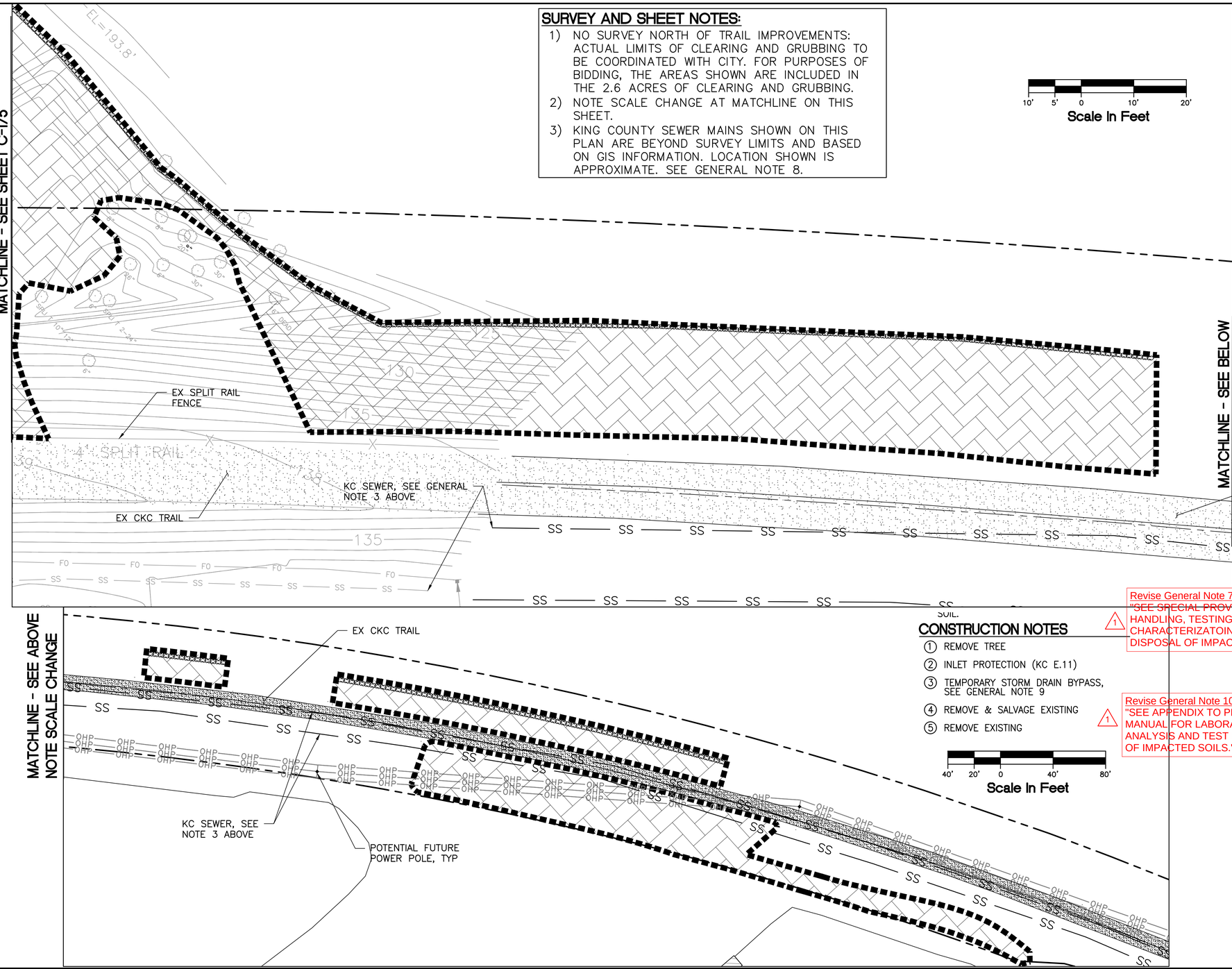

CONSTRUCTION NOTES

1. REMOVE TREE
2. INLET PROTECTION (KC E.11)
3. TEMPORARY STORM DRAIN BYPASS, SEE GENERAL NOTE 9
4. REMOVE & SALVAGE EXISTING
5. REMOVE EXISTING

Revise General Note 7 to read: "~~SEE SPECIAL PROVISIONS~~ FOR HANDLING, TESTING, CHARACTERIZATOIN, AND DISPOSAL OF IMPACTED SOILS." (1)

Revise General Note 10 to read: "SEE APPENDIX TO PROJECT MANUAL FOR LABORATORY ANALYSIS AND TEST RESULTS OF IMPACTED SOILS." (1)

N

LEGEND

- RIGHT OF WAY LINE
- APPROXIMATE LIMITS OF WORK
- CLEAR & GRUB (SEE GENERAL NOTE 4)
- CLEAR & GRUB OUTSIDE LIMITS OF HIGH VISIBILITY SILT FENCE, SEE SPECIAL PROVISIONS
- REMOVE PAVEMENT
- REMOVE EXISTING GRAVEL SURFACING
- WATTLE (CK-E.10)
- HIGH VISIBILITY FENCE (WSDOT STD PLAN I-10.10-01)
- SILT FENCE (CK-E.03), UNLESS NOTED OTHERWISE
- TEMPORARY STORM DRAIN BYPASS
- FORCE MAIN / PUMPED STORMWATER

GENERAL NOTES

1. ALL UTILITIES DESCRIBED AS "FUTURE" ARE PART OF SEPARATE PROJECTS. THESE PLANS ASSUME ALL COMFORT INN BYPASS INFRASTRUCTURE IS INSTALLED PRIOR TO START OF CONSTRUCTION.
2. SEE SHEET C-170 FOR CITY OF KIRKLAND STANDARD EROSION/SEDIMENTATION CONTROL NOTES.
3. PROTECT EXISTING INFRASTRUCTURE, SITE FEATURES AND STRUCTURES NOT IDENTIFIED FOR REMOVAL.
4. INSTALL TEMPORARY SLOPE STABILIZATION (CK-E.06) WHERE SLOPE IS GREATER THAN 3H:1V.
5. NOT USED.
6. CONTRACTOR TO LOCATE AND PROTECT ALL EXISTING UTILITIES TO REMAIN.
7. SEE SPECIFICATIONS FOR HANDLING, CHARACTERIZATION, AND DISPOSAL OF POTENTIALLY IMPACTED SOILS.
8. CONFIRM STOCKPILING, LAYDOWN AREAS, AND ALL WORK WITHIN VICINITY OF KING COUNTY SANITARY SEWERS WITH ENGINEER PRIOR TO CONSTRUCTION.
9. REDIRECT DITCH FLOW AND SIZE TEMPORARY STORM DRAIN BYPASS TO CONVEY 100YR FLOW 13.9 CFS TO DOWNSTREAM STORM DRAIN SYSTEM.
10. SEE SPECIAL PROVISIONS AND HAZARDOUS MATERIALS REPORT IN PROJECT MANUAL APPENDIX FOR REQUIREMENTS FOR REMOVAL, HANDLING, AND DISPOSAL OF CONTAMINATED SOIL.

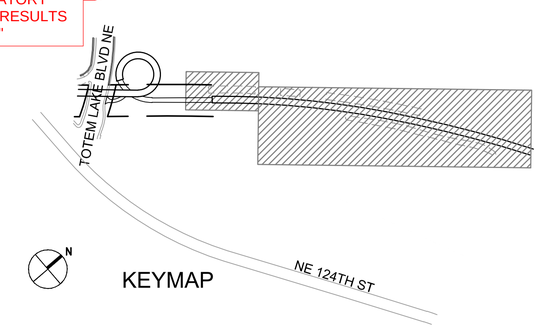

811 Know what's below. Call before you dig.

File: G:\15c\15094c TLPB\Current\TLPB_170_TESC-Demo.dwg Save Date: Dec 06, 2019 11:00 AM Saved By: JENNIFERA

CITY OF KIRKLAND
DEPARTMENT OF PUBLIC WORKS
123 FIFTH AVENUE KIRKLAND, WA 98033
(425) 587-3800 www.kirklandwa.gov

NO.	DATE	BY	APPR.	REVISION
1	2020/03/09	NP	ST	ADDENDUM 3
0	2019/12/06	NP	ST	ISSUE FOR BID

NATHAN ALAN POLANSKI, STATE OF WASHINGTON, REGISTERED PROFESSIONAL ENGINEER, 12-5-19

COWI
MIG | SvR

ST	2019/12/06	DESIGNED BY: DATE
JA	2019/12/06	DRAWN BY: DATE
KG	2019/12/06	CHECKED BY: DATE

CITY OF KIRKLAND
TOTEM LAKE PEDESTRIAN BRIDGE

DEMOLITION AND EROSION CONTROL PLAN 7

SHEET: TLC – C –177
SCALE: AS SHOWN
FILENAME: TLPB_170_TESC-Demo.dwg

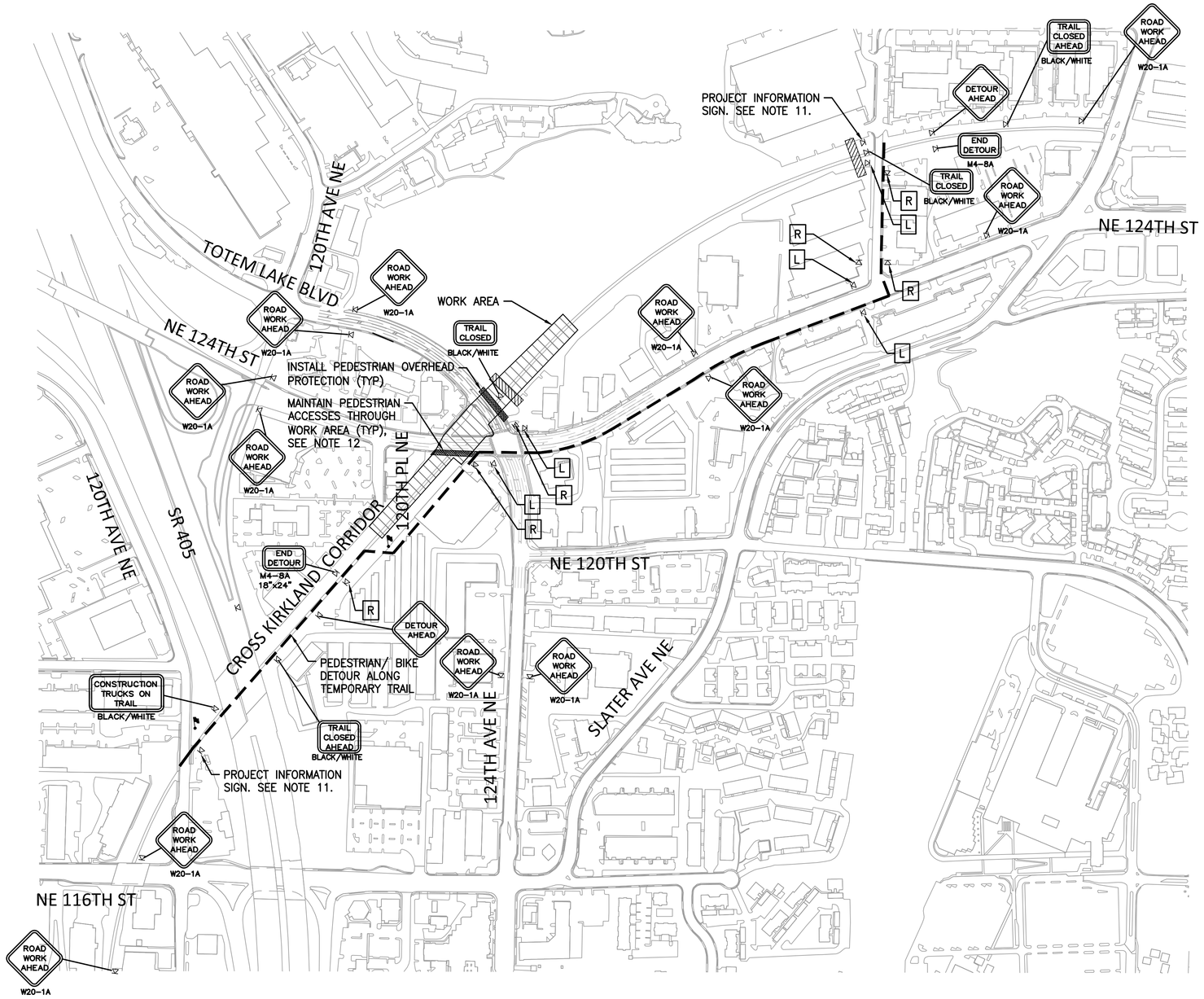

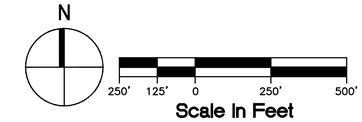

LEGEND

- FLAGGING STATION
- CHANNELIZING DEVICE
- TEMPORARY SIGN LOCATION
- WORK AREA
- TYPE 3 BARRICADE
- PEDESTRIAN AND BIKE DETOUR ROUTE
- R — M4-9AR, 30"x24", BLACK/ORANGE
- L — M4-9AL, 30"x24", BLACK/ORANGE

NOTES

1. SEE PROJECT SPECIFICATIONS FOR ADDITIONAL TRAFFIC CONTROL REQUIREMENTS INCLUDING ACCESS FOR USERS AND NIGHT TIME WORK REQUIREMENTS.
2. ALL SIGNS ARE BLACK ON ORANGE UNLESS OTHERWISE NOTED.
3. CONTRACTOR SHALL PROVIDE FLAGGERS AS NEEDED TO FACILITATE INGRESS AND EGRESS AT DRIVEWAYS.
4. CONTRACTOR SHALL PROVIDE FLAGGERS WHERE NEEDED FOR PEDESTRIANS.
5. FLAGGING STATIONS SHALL BE STAFFED ONLY WHEN FLAGGING IS REQUIRED.
6. PHASE CONSTRUCTION TO MAINTAIN A MINIMUM OF ONE VEHICULAR AND ONE PEDESTRIAN ACCESS POINT FOR EACH PROPERTY WITHIN WORK AREA LIMITS AT ALL TIMES.
7. DISTANCES MAY VARY AS APPROVED BY THE ENGINEER.
8. SIGN SPACING, CHANNELIZATION DEVICE SPACING, AND TAPER LENGTH TABLES PER WSDOT WORK ZONE TRAFFIC CONTROL PLANS TCP-1 – TCP-8.
9. ALL BIKE DETOUR ROUTES SHALL HAVE PAVED SURFACING.
10. FOR NIGHT TIME DETOURS, MAINTAIN PAVEMENTS NECESSARY FOR DETOUR TURNING MOVEMENTS.
11. COORDINATE WITH CITY FOR PREPARATION OF PROJECT SIGN FABRICATED BY CITY INSTALLED BY CONTRACTOR.
12. PROVIDE PEDESTRIAN ACCESS THROUGH TRAFFIC ISLAND BETWEEN NE 124TH ST AND TOTEM LAKE BLVD IF PEDESTRIAN ROUTES ON SOUTH SIDE OF NE 124TH ST OR NORTH SIDE OF TOTEM LAKE BLVD ARE CLOSED. CONTRACTOR SHALL COORDINATE TEMPORARY PEDESTRIAN CLOSURES WITH CITY FOR SAFE PEDESTRIANS CROSSING OF 124TH AVE NE AND TOTEM LAKE BLVD.

811 Know what's below. Call before you dig.

CITY OF KIRKLAND
DEPARTMENT OF PUBLIC WORKS
123 FIFTH AVENUE KIRKLAND, WA 98033
(425) 587-3800 www.kirklandwa.gov

NO.	DATE	BY	APPR.	REVISION
0	2019/12/06	NP	ST	ISSUE FOR BID

SAKARU TSUCHIYA — STATE OF WASHINGTON — 45278 — REGISTERED PROFESSIONAL ENGINEER — 12.5.19

COWI · MIG · SvR

ST	2019/12/06
DESIGNED BY:	DATE
JA	2019/12/06
DRAWN BY:	DATE
KG	2019/12/06
CHECKED BY:	DATE

CITY OF KIRKLAND
TOTEM LAKE PEDESTRIAN BRIDGE

TEMPORARY TRAFFIC CONTROL PLAN
DETOUR FOR PEDESTRIANS AND BIKES

SHEET: TLC – C –181
SCALE: AS SHOWN
FILENAME: TLPB_180_TRAFFIC-CNTRL.dwg

File: G:\15c\15094c TLPB\Current\TLPB_180_TRAFFIC-CNTRL.dwg Save Date: Dec 06, 2019 8:43 AM Saved By: JENNIFERA

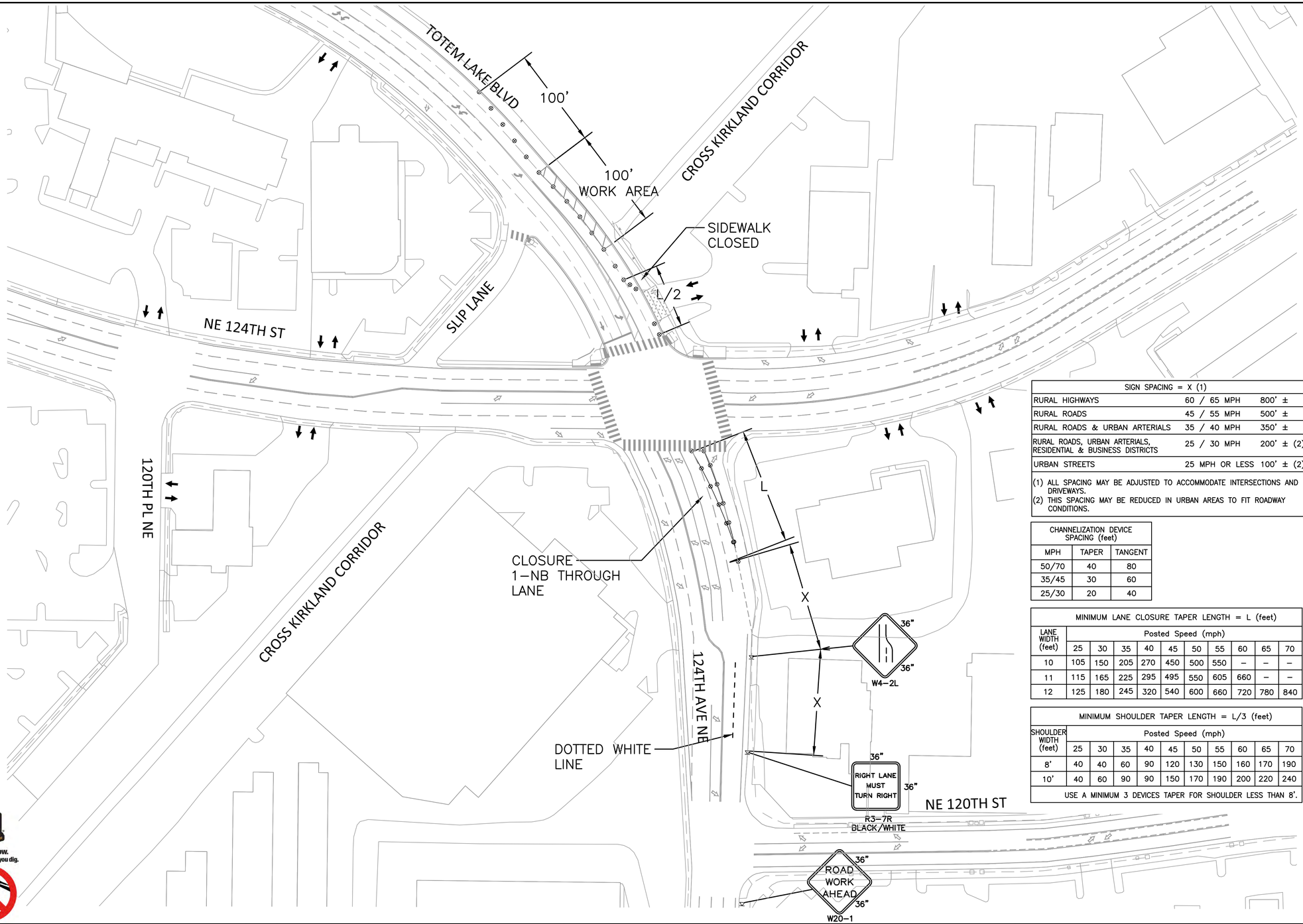

N

50' 25' 0 50' 100'

Scale In Feet

LEGEND

- FLAGGING STATION
- CHANNELIZING DEVICE
- TEMPORARY SIGN LOCATION
- WORK AREA
- TYPE 3 BARRICADE
- DRIVEWAY ACCESS

NOTES

1. SEE PROJECT SPECIFICATIONS FOR ADDITIONAL TRAFFIC CONTROL REQUIREMENTS INCLUDING ACCESS FOR USERS AND NIGHT TIME WORK REQUIREMENTS.
2. ALL SIGNS ARE BLACK ON ORANGE UNLESS OTHERWISE NOTED.
3. CONTRACTOR SHALL PROVIDE FLAGGERS AS NEEDED TO FACILITATE INGRESS AND EGRESS AT DRIVEWAYS.
4. CONTRACTOR SHALL PROVIDE FLAGGERS WHERE NEEDED FOR PEDESTRIANS.
5. FLAGGING STATIONS SHALL BE STAFFED ONLY WHEN FLAGGING IS REQUIRED.
6. PHASE CONSTRUCTION TO MAINTAIN A MINIMUM OF ONE VEHICULAR AND ONE PEDESTRIAN ACCESS POINT FOR EACH PROPERTY WITHIN WORK AREA LIMITS AT ALL TIMES.
7. DISTANCES MAY VARY AS APPROVED BY THE ENGINEER.
8. SIGN SPACING, CHANNELIZATION DEVICE SPACING, AND TAPER LENGTH TABLES PER WSDOT WORK ZONE TRAFFIC CONTROL PLANS TCP-1 – TCP-8.
9. ALL BIKE DETOUR ROUTES SHALL HAVE PAVED SURFACING.
10. FOR NIGHT TIME DETOURS, MAINTAIN PAVEMENTS NECESSARY FOR DETOUR TURNING MOVEMENTS.
11. SEE C-181 FOR PEDESTRIAN DETOUR ROUTES.

SIGN SPACING = X (1)		
RURAL HIGHWAYS	60 / 65 MPH	800' ±
RURAL ROADS	45 / 55 MPH	500' ±
RURAL ROADS & URBAN ARTERIALS	35 / 40 MPH	350' ±
RURAL ROADS, URBAN ARTERIALS, RESIDENTIAL & BUSINESS DISTRICTS	25 / 30 MPH	200' ± (2)
URBAN STREETS	25 MPH OR LESS	100' ± (2)

(1) ALL SPACING MAY BE ADJUSTED TO ACCOMMODATE INTERSECTIONS AND DRIVEWAYS.
(2) THIS SPACING MAY BE REDUCED IN URBAN AREAS TO FIT ROADWAY CONDITIONS.

CHANNELIZATION DEVICE SPACING (feet)		
MPH	TAPER	TANGENT
50/70	40	80
35/45	30	60
25/30	20	40

MINIMUM LANE CLOSURE TAPER LENGTH = L (feet)										
LANE WIDTH (feet)	Posted Speed (mph)									
	25	30	35	40	45	50	55	60	65	70
10	105	150	205	270	450	500	550	–	–	–
11	115	165	225	295	495	550	605	660	–	–
12	125	180	245	320	540	600	660	720	780	840

MINIMUM SHOULDER TAPER LENGTH = L/3 (feet)										
SHOULDER WIDTH (feet)	Posted Speed (mph)									
	25	30	35	40	45	50	55	60	65	70
8'	40	40	60	90	120	130	150	160	170	190
10'	40	60	90	90	150	170	190	200	220	240
USE A MINIMUM 3 DEVICES TAPER FOR SHOULDER LESS THAN 8'.										

Know what's below. Call before you dig.

CITY OF KIRKLAND
DEPARTMENT OF PUBLIC WORKS
123 FIFTH AVENUE KIRKLAND, WA 98033
(425) 587-3800 www.kirklandwa.gov

NO.	DATE	BY	APPR.	REVISION
0	2019/12/06	NP	ST	ISSUE FOR BID

SAKARU TSUCHIYA — STATE OF WASHINGTON — REGISTERED PROFESSIONAL ENGINEER — 12.5.19

COWI MIG SvR

ST 2019/12/06 DESIGNED BY: DATE
JA 2019/12/06 DRAWN BY: DATE
KG 2019/12/06 CHECKED BY: DATE

CITY OF KIRKLAND
TOTEM LAKE PEDESTRIAN BRIDGE
TEMPORARY TRAFFIC CONTROL PLAN
LANE CLOSURE ON TOTEM LAKE BLVD
(NORTH SIDE)

SHEET: TLC – C –182
SCALE: AS SHOWN
FILENAME: TLPB_180_TRAFFIC-CNTRL.dwg

File: G:\15c\15094c TLPB\Current\TLPB_180_TRAFFIC-CNTRL.dwg Save Date: Dec 06, 2019 8:43 AM Saved By: JENNIFERA

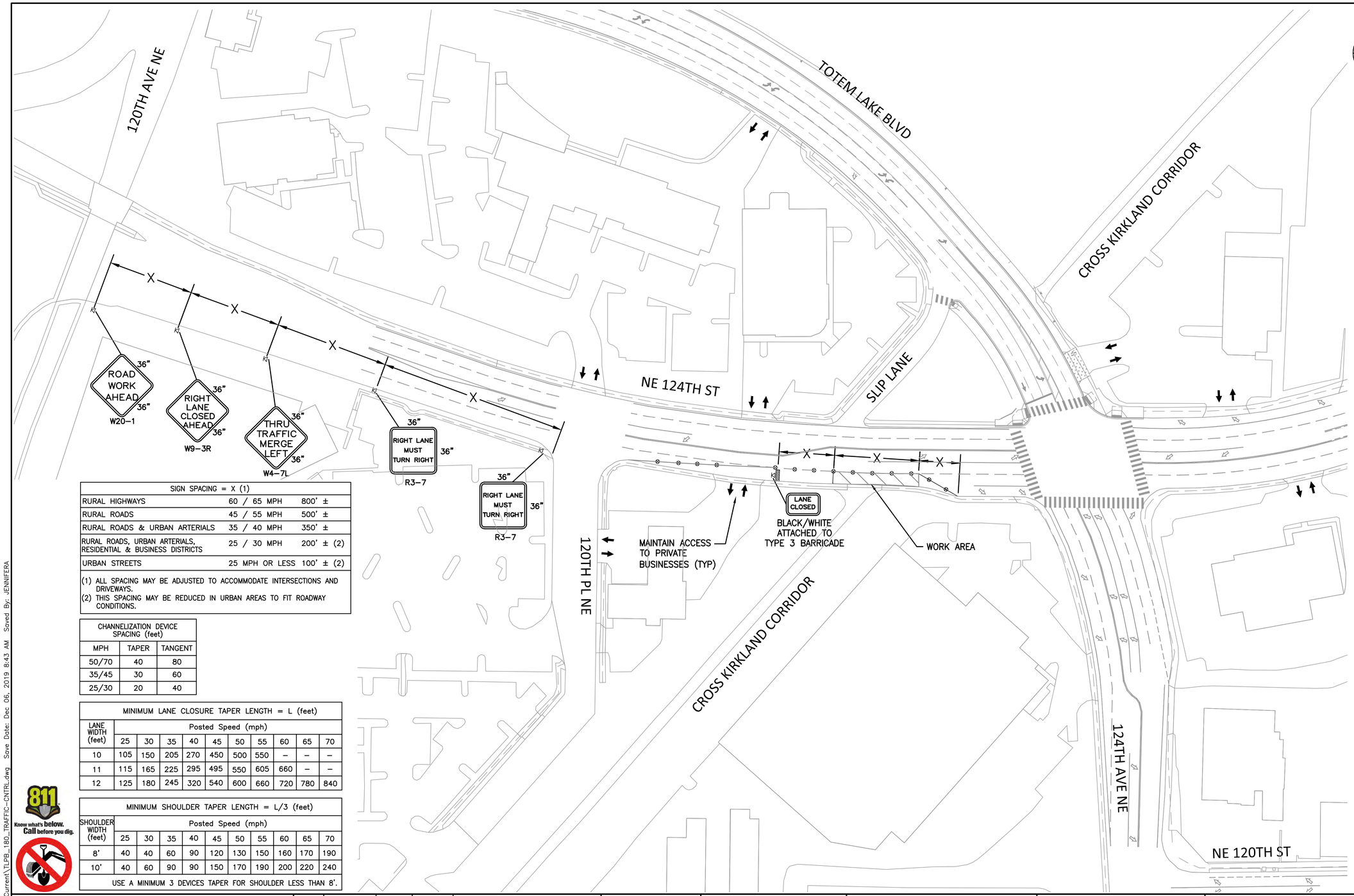

SIGN SPACING = X (1)		
RURAL HIGHWAYS	60 / 65 MPH	800' ±
RURAL ROADS	45 / 55 MPH	500' ±
RURAL ROADS & URBAN ARTERIALS	35 / 40 MPH	350' ±
RURAL ROADS, URBAN ARTERIALS, RESIDENTIAL & BUSINESS DISTRICTS	25 / 30 MPH	200' ± (2)
URBAN STREETS	25 MPH OR LESS	100' ± (2)

(1) ALL SPACING MAY BE ADJUSTED TO ACCOMMODATE INTERSECTIONS AND DRIVEWAYS.
(2) THIS SPACING MAY BE REDUCED IN URBAN AREAS TO FIT ROADWAY CONDITIONS.

CHANNELIZATION DEVICE SPACING (feet)		
MPH	TAPER	TANGENT
50/70	40	80
35/45	30	60
25/30	20	40

MINIMUM LANE CLOSURE TAPER LENGTH = L (feet)										
LANE WIDTH (feet)	Posted Speed (mph)									
	25	30	35	40	45	50	55	60	65	70
10	105	150	205	270	450	500	550	–	–	–
11	115	165	225	295	495	550	605	660	–	–
12	125	180	245	320	540	600	660	720	780	840

MINIMUM SHOULDER TAPER LENGTH = L/3 (feet)										
SHOULDER WIDTH (feet)	Posted Speed (mph)									
	25	30	35	40	45	50	55	60	65	70
8'	40	40	60	90	120	130	150	160	170	190
10'	40	60	90	90	150	170	190	200	220	240
USE A MINIMUM 3 DEVICES TAPER FOR SHOULDER LESS THAN 8'.										

LEGEND

- FLAGGING STATION
- CHANNELIZING DEVICE
- TEMPORARY SIGN LOCATION
- WORK AREA
- TYPE 3 BARRICADE
- DRIVEWAY ACCESS

NOTES

1. SEE PROJECT SPECIFICATIONS FOR ADDITIONAL TRAFFIC CONTROL REQUIREMENTS INCLUDING ACCESS FOR USERS AND NIGHT TIME WORK REQUIREMENTS.
2. ALL SIGNS ARE BLACK ON ORANGE UNLESS OTHERWISE NOTED.
3. CONTRACTOR SHALL PROVIDE FLAGGERS AS NEEDED TO FACILITATE INGRESS AND EGRESS AT DRIVEWAYS.
4. CONTRACTOR SHALL PROVIDE FLAGGERS WHERE NEEDED FOR PEDESTRIANS.
5. FLAGGING STATIONS SHALL BE STAFFED ONLY WHEN FLAGGING IS REQUIRED.
6. PHASE CONSTRUCTION TO MAINTAIN A MINIMUM OF ONE VEHICULAR AND ONE PEDESTRIAN ACCESS POINT FOR EACH PROPERTY WITHIN WORK AREA LIMITS AT ALL TIMES.
7. DISTANCES MAY VARY AS APPROVED BY THE ENGINEER.
8. SIGN SPACING, CHANNELIZATION DEVICE SPACING, AND TAPER LENGTH TABLES PER WSDOT WORK ZONE TRAFFIC CONTROL PLANS TCP–1 – TCP–8.
9. ALL BIKE DETOUR ROUTES SHALL HAVE PAVED SURFACING.
10. FOR NIGHT TIME DETOURS, MAINTAIN PAVEMENTS NECESSARY FOR DETOUR TURNING MOVEMENTS.
11. SEE C–181 FOR PEDESTRIAN DETOUR ROUTES.

811 Know what's below. Call before you dig.

CITY OF KIRKLAND
DEPARTMENT OF PUBLIC WORKS
123 FIFTH AVENUE KIRKLAND, WA 98033
(425) 587-3800 www.kirklandwa.gov

NO.	DATE	BY	APPR.	REVISION
0	2019/12/06	NP	ST	ISSUE FOR BID

SAKARU TSUCHIYA — STATE OF WASHINGTON — 45178 — REGISTERED PROFESSIONAL ENGINEER — 12.5.19

COWI MIG SvR

ST 2019/12/06 DESIGNED BY: DATE
JA 2019/12/06 DRAWN BY: DATE
KG 2019/12/06 CHECKED BY: DATE

CITY OF KIRKLAND
TOTEM LAKE PEDESTRIAN BRIDGE

TEMPORARY TRAFFIC CONTROL PLAN
LANE CLOSURE ON NE 124TH STREET
(SOUTH SIDE)

SHEET: TLC – C –183
SCALE: AS SHOWN
FILENAME: TLPB_180_TRAFFIC–CNTRL.dwg

File: G:\15c\15094c TLPB\Current\TLPB_180_TRAFFIC–CNTRL.dwg Save Date: Dec 06, 2019 8:43 AM Saved By: JENNIFERA

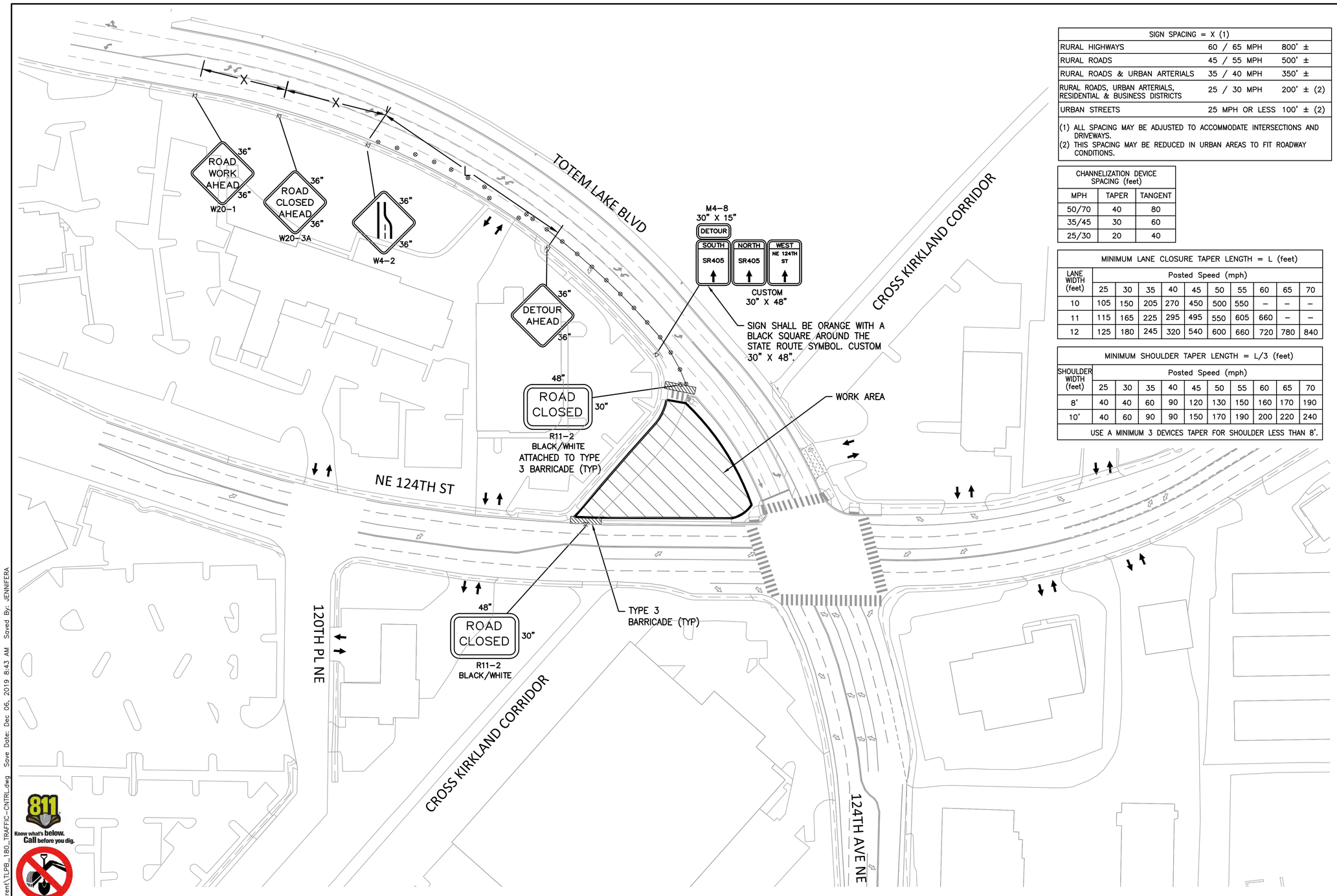

SIGN SPACING = X (1)		
RURAL HIGHWAYS	60 / 65 MPH	800' ±
RURAL ROADS	45 / 55 MPH	500' ±
RURAL ROADS & URBAN ARTERIALS	35 / 40 MPH	350' ±
RURAL ROADS, URBAN ARTERIALS, RESIDENTIAL & BUSINESS DISTRICTS	25 / 30 MPH	200' ± (2)
URBAN STREETS	25 MPH OR LESS	100' ± (2)

(1) ALL SPACING MAY BE ADJUSTED TO ACCOMMODATE INTERSECTIONS AND DRIVEWAYS.
(2) THIS SPACING MAY BE REDUCED IN URBAN AREAS TO FIT ROADWAY CONDITIONS.

CHANNELIZATION DEVICE SPACING (feet)		
MPH	TAPER	TANGENT
50/70	40	80
35/45	30	60
25/30	20	40

MINIMUM LANE CLOSURE TAPER LENGTH = L (feet)										
LANE WIDTH (feet)	Posted Speed (mph)									
	25	30	35	40	45	50	55	60	65	70
10	105	150	205	270	450	500	550	–	–	–
11	115	165	225	295	495	550	605	660	–	–
12	125	180	245	320	540	600	660	720	780	840

MINIMUM SHOULDER TAPER LENGTH = L/3 (feet)										
SHOULDER WIDTH (feet)	Posted Speed (mph)									
	25	30	35	40	45	50	55	60	65	70
8'	40	40	60	90	120	130	150	160	170	190
10'	40	60	90	90	150	170	190	200	220	240
USE A MINIMUM 3 DEVICES TAPER FOR SHOULDER LESS THAN 8'.										

N

50' 25' 0 50' 100'

Scale In Feet

LEGEND

- FLAGGING STATION
- CHANNELIZING DEVICE
- TEMPORARY SIGN LOCATION
- WORK AREA
- TYPE 3 BARRICADE
- DRIVEWAY ACCESS

NOTES

1. SEE PROJECT SPECIFICATIONS FOR ADDITIONAL TRAFFIC CONTROL REQUIREMENTS INCLUDING ACCESS FOR USERS AND NIGHT TIME WORK REQUIREMENTS.
2. ALL SIGNS ARE BLACK ON ORANGE UNLESS OTHERWISE NOTED.
3. CONTRACTOR SHALL PROVIDE FLAGGERS AS NEEDED TO FACILITATE INGRESS AND EGRESS AT DRIVEWAYS.
4. CONTRACTOR SHALL PROVIDE FLAGGERS WHERE NEEDED FOR PEDESTRIANS.
5. FLAGGING STATIONS SHALL BE STAFFED ONLY WHEN FLAGGING IS REQUIRED.
6. PHASE CONSTRUCTION TO MAINTAIN A MINIMUM OF ONE VEHICULAR AND ONE PEDESTRIAN ACCESS POINT FOR EACH PROPERTY WITHIN WORK AREA LIMITS AT ALL TIMES.
7. DISTANCES MAY VARY AS APPROVED BY THE ENGINEER.
8. SIGN SPACING, CHANNELIZATION DEVICE SPACING, AND TAPER LENGTH TABLES PER WSDOT WORK ZONE TRAFFIC CONTROL PLANS TCP-1 – TCP-8.
9. ALL BIKE DETOUR ROUTES SHALL HAVE PAVED SURFACING.
10. FOR NIGHT TIME DETOURS, MAINTAIN PAVEMENTS NECESSARY FOR DETOUR TURNING MOVEMENTS.
11. SEE C-185 FOR DETOUR.
12. SEE C-181 FOR PEDESTRIAN DETOUR ROUTES.

CITY OF KIRKLAND
DEPARTMENT OF PUBLIC WORKS
123 FIFTH AVENUE KIRKLAND, WA 98033
(425) 587-3800 www.kirklandwa.gov

NO.	DATE	BY	APPR.	REVISION
0	2019/12/06	NP	ST	ISSUE FOR BID

SAKARU TSUCHIA — STATE OF WASHINGTON — REGISTERED PROFESSIONAL ENGINEER — 12.5.19

COWI MIG SvR

ST 2019/12/06 DESIGNED BY: DATE
JA 2019/12/06 DRAWN BY: DATE
KG 2019/12/06 CHECKED BY: DATE

CITY OF KIRKLAND
TOTEM LAKE PEDESTRIAN BRIDGE

TEMPORARY TRAFFIC CONTROL PLAN
SLIP LANE CLOSURE FROM TOTEM LAKE BLVD TO NE 124TH ST

SHEET: TLC – C –184
SCALE: AS SHOWN
FILENAME: TLPB_180_TRAFFIC-CNTRL.dwg

File: G:\15c\15094c TLPB\Current\TLPB_180_TRAFFIC-CNTRL.dwg Save Date: Dec 06, 2019 8:43 AM Saved By: JENNIFERA

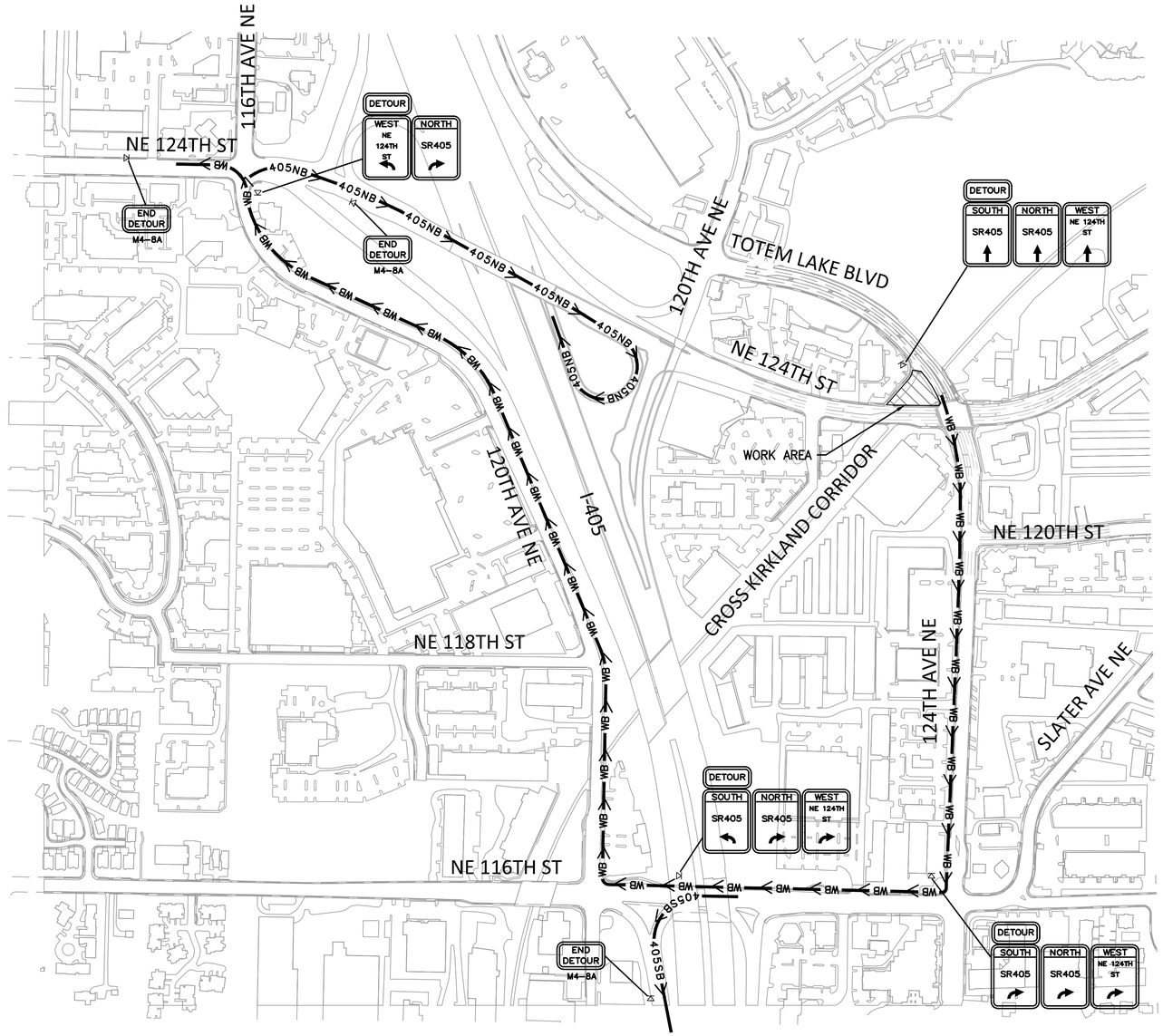

N

250' 125' 0 250' 500'

Scale In Feet

LEGEND

- FLAGGING STATION
- CHANNELIZING DEVICE
- TEMPORARY SIGN LOCATION
- WORK AREA
- TYPE 3 BARRICADE
- NB — NB TRAFFIC ON TOTEM LAKE BLVD
- SB — SB TRAFFIC ON TOTME LAKE BLVD
- EB — EB TRAFFIC ON NE 124TH ST
- WB — WB TRAFFIC ON NE 124TH ST
- 405NB — DETOUR FOR SR405 NB ON-RAMP
- 405SB — DETOUR FOR SR405 SB ON-RAMP
- A — W20-1 ROAD WORK AHEAD
- B — W20-3A ROAD CLOSED AHEAD
- C — W20-2A DETOUR AHEAD
- D — M4-8A END DETOUR

NOTES

1. SEE PROJECT SPECIFICATIONS FOR ADDITIONAL TRAFFIC CONTROL REQUIREMENTS INCLUDING ACCESS FOR USERS AND NIGHT TIME WORK REQUIREMENTS.
2. ALL SIGNS ARE BLACK ON ORANGE UNLESS OTHERWISE NOTED.
3. CONTRACTOR SHALL PROVIDE FLAGGERS AS NEEDED TO FACILITATE INGRESS AND EGRESS AT DRIVEWAYS.
4. CONTRACTOR SHALL PROVIDE FLAGGERS WHERE NEEDED FOR PEDESTRIANS.
5. FLAGGING STATIONS SHALL BE STAFFED ONLY WHEN FLAGGING IS REQUIRED.
6. PHASE CONSTRUCTION TO MAINTAIN A MINIMUM OF ONE VEHICULAR AND ONE PEDESTRIAN ACCESS POINT FOR EACH PROPERTY WITHIN WORK AREA LIMITS AT ALL TIMES.
7. DISTANCES MAY VARY AS APPROVED BY THE ENGINEER.
8. SIGN SPACING, CHANNELIZATION DEVICE SPACING, AND TAPER LENGTH TABLES PER WSDOT WORK ZONE TRAFFIC CONTROL PLANS TCP-1 – TCP-8.
9. ALL BIKE DETOUR ROUTES SHALL HAVE PAVED SURFACING.
10. FOR NIGHT TIME DETOURS, MAINTAIN PAVEMENTS NECESSARY FOR DETOUR TURNING MOVEMENTS.
11. SEE C-181 FOR PEDESTRIAN DETOUR ROUTES.

811 Know what's below. Call before you dig.

CITY OF KIRKLAND
DEPARTMENT OF PUBLIC WORKS
123 FIFTH AVENUE KIRKLAND, WA 98033
(425) 587-3800 www.kirklandwa.gov

NO.	DATE	BY	APPR.	REVISION
0	2019/12/06	NP	ST	ISSUE FOR BID

SAKARU TSUCHIYA — STATE OF WASHINGTON — REGISTERED PROFESSIONAL ENGINEER

COWI MIG SvR

ST	2019/12/06
DESIGNED BY:	DATE
JA	2019/12/06
DRAWN BY:	DATE
KG	2019/12/06
CHECKED BY:	DATE

CITY OF KIRKLAND
TOTEM LAKE PEDESTRIAN BRIDGE

TEMPORARY TRAFFIC CONTROL PLAN
DETOUR FOR SLIP LANE CLOSURE FROM
TOTEM LAKE BLVD TO NE 124TH ST

SHEET: TLC – C –185

SCALE: AS SHOWN

FILENAME: TLPB_180_TRAFFIC-CNTRL.dwg

File: G:\15c\15094c TLPB\Current\TLPB_180_TRAFFIC-CNTRL.dwg Save Date: Dec 06, 2019 8:43 AM Saved By: JENNIFERA

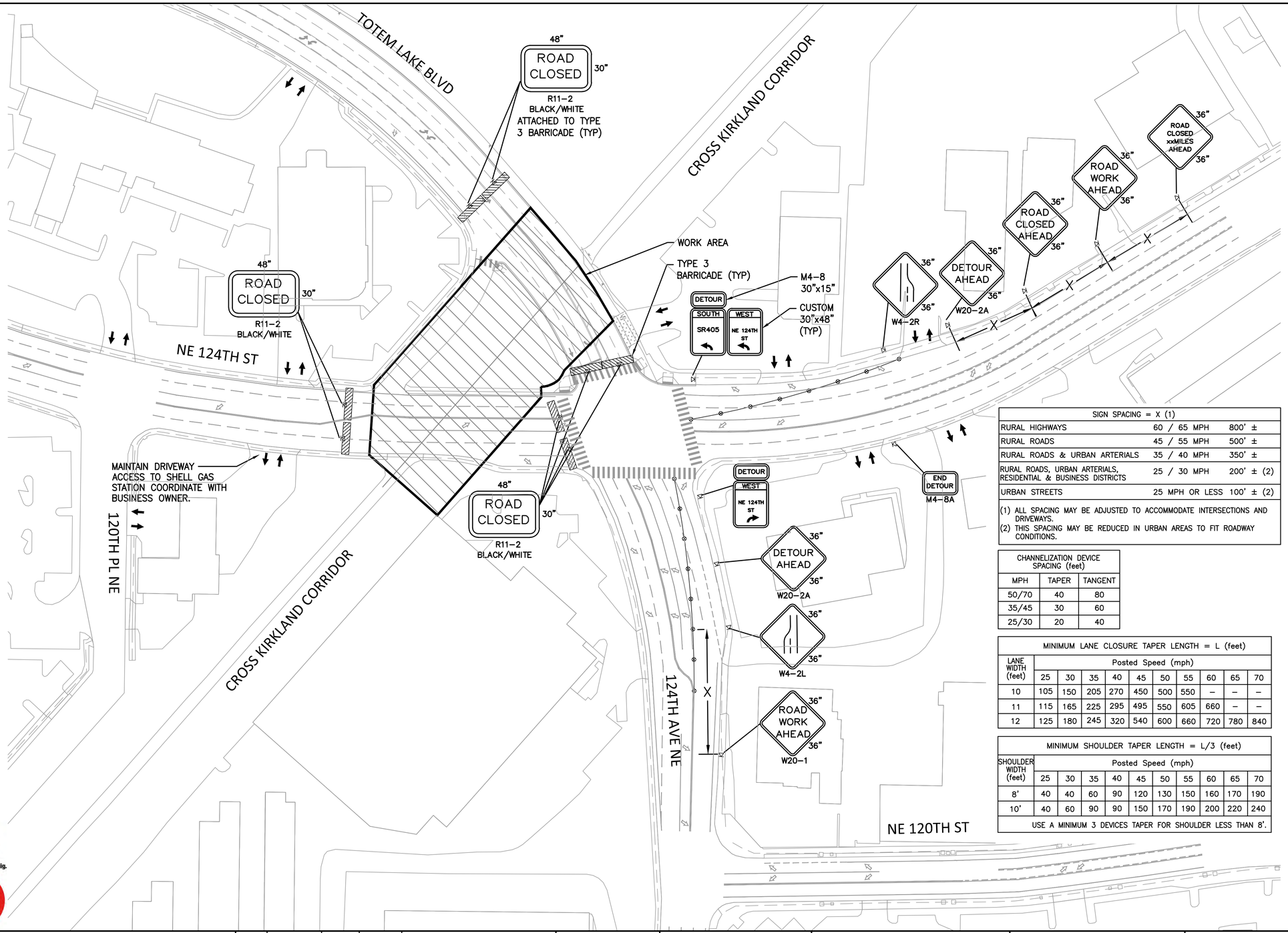

N

50' 25' 0 50' 100'

Scale In Feet

LEGEND

- FLAGGING STATION
- CHANNELIZING DEVICE
- TEMPORARY SIGN LOCATION
- WORK AREA
- TYPE 3 BARRICADE
- DRIVEWAY ACCESS

NOTES

1. SEE PROJECT SPECIFICATIONS FOR ADDITIONAL TRAFFIC CONTROL REQUIREMENTS INCLUDING ACCESS FOR USERS AND NIGHT TIME WORK REQUIREMENTS.
2. ALL SIGNS ARE BLACK ON ORANGE UNLESS OTHERWISE NOTED.
3. CONTRACTOR SHALL PROVIDE FLAGGERS AS NEEDED TO FACILITATE INGRESS AND EGRESS AT DRIVEWAYS.
4. CONTRACTOR SHALL PROVIDE FLAGGERS WHERE NEEDED FOR PEDESTRIANS.
5. FLAGGING STATIONS SHALL BE STAFFED ONLY WHEN FLAGGING IS REQUIRED.
6. PHASE CONSTRUCTION TO MAINTAIN A MINIMUM OF ONE VEHICULAR AND ONE PEDESTRIAN ACCESS POINT FOR EACH PROPERTY WITHIN WORK AREA LIMITS AT ALL TIMES.
7. DISTANCES MAY VARY AS APPROVED BY THE ENGINEER.
8. SIGN SPACING, CHANNELIZATION DEVICE SPACING, AND TAPER LENGTH TABLES PER WSDOT WORK ZONE TRAFFIC CONTROL PLANS TCP-1 – TCP-8.
9. ALL BIKE DETOUR ROUTES SHALL HAVE PAVED SURFACING.
10. FOR NIGHT TIME DETOURS, MAINTAIN PAVEMENTS NECESSARY FOR DETOUR TURNING MOVEMENTS.
11. SEE C-187 FOR DETOUR.
12. SEE C-181 FOR PEDESTRIAN DETOUR ROUTES.

SIGN SPACING = X (1)		
RURAL HIGHWAYS	60 / 65 MPH	800' ±
RURAL ROADS	45 / 55 MPH	500' ±
RURAL ROADS & URBAN ARTERIALS	35 / 40 MPH	350' ±
RURAL ROADS, URBAN ARTERIALS, RESIDENTIAL & BUSINESS DISTRICTS	25 / 30 MPH	200' ± (2)
URBAN STREETS	25 MPH OR LESS	100' ± (2)

(1) ALL SPACING MAY BE ADJUSTED TO ACCOMMODATE INTERSECTIONS AND DRIVEWAYS.
(2) THIS SPACING MAY BE REDUCED IN URBAN AREAS TO FIT ROADWAY CONDITIONS.

CHANNELIZATION DEVICE SPACING (feet)		
MPH	TAPER	TANGENT
50/70	40	80
35/45	30	60
25/30	20	40

MINIMUM LANE CLOSURE TAPER LENGTH = L (feet)										
LANE WIDTH (feet)	Posted Speed (mph)									
	25	30	35	40	45	50	55	60	65	70
10	105	150	205	270	450	500	550	–	–	–
11	115	165	225	295	495	550	605	660	–	–
12	125	180	245	320	540	600	660	720	780	840

MINIMUM SHOULDER TAPER LENGTH = L/3 (feet)										
SHOULDER WIDTH (feet)	Posted Speed (mph)									
	25	30	35	40	45	50	55	60	65	70
8'	40	40	60	90	120	130	150	160	170	190
10'	40	60	90	90	150	170	190	200	220	240
USE A MINIMUM 3 DEVICES TAPER FOR SHOULDER LESS THAN 8'.										

Know what's below. Call before you dig.

CITY OF KIRKLAND
DEPARTMENT OF PUBLIC WORKS
123 FIFTH AVENUE KIRKLAND, WA 98033
(425) 587-3800 www.kirklandwa.gov

NO.	DATE	BY	APPR.	REVISION
0	2019/12/06	NP	ST	ISSUE FOR BID

SAKARU TSUCHIKA — STATE OF WASHINGTON — REGISTERED PROFESSIONAL ENGINEER — 12.5.19

COWI MIG SvR

ST 2019/12/06 DESIGNED BY: DATE
JA 2019/12/06 DRAWN BY: DATE
KG 2019/12/06 CHECKED BY: DATE

CITY OF KIRKLAND
TOTEM LAKE PEDESTRIAN BRIDGE

TEMPORARY TRAFFIC CONTROL PLAN
NIGHT TIME CLOSURE OF TOTEM LAKE BLVD AND NE 124TH STREET

SHEET: TLC – C –186
SCALE: AS SHOWN
FILENAME: TLPB_180_TRAFFIC-CNTRL.dwg

File: G:\15c\15094c TLPB\Current\TLPB_180_TRAFFIC-CNTRL.dwg Save Date: Dec 06, 2019 8:43 AM Saved By: JENNIFERA

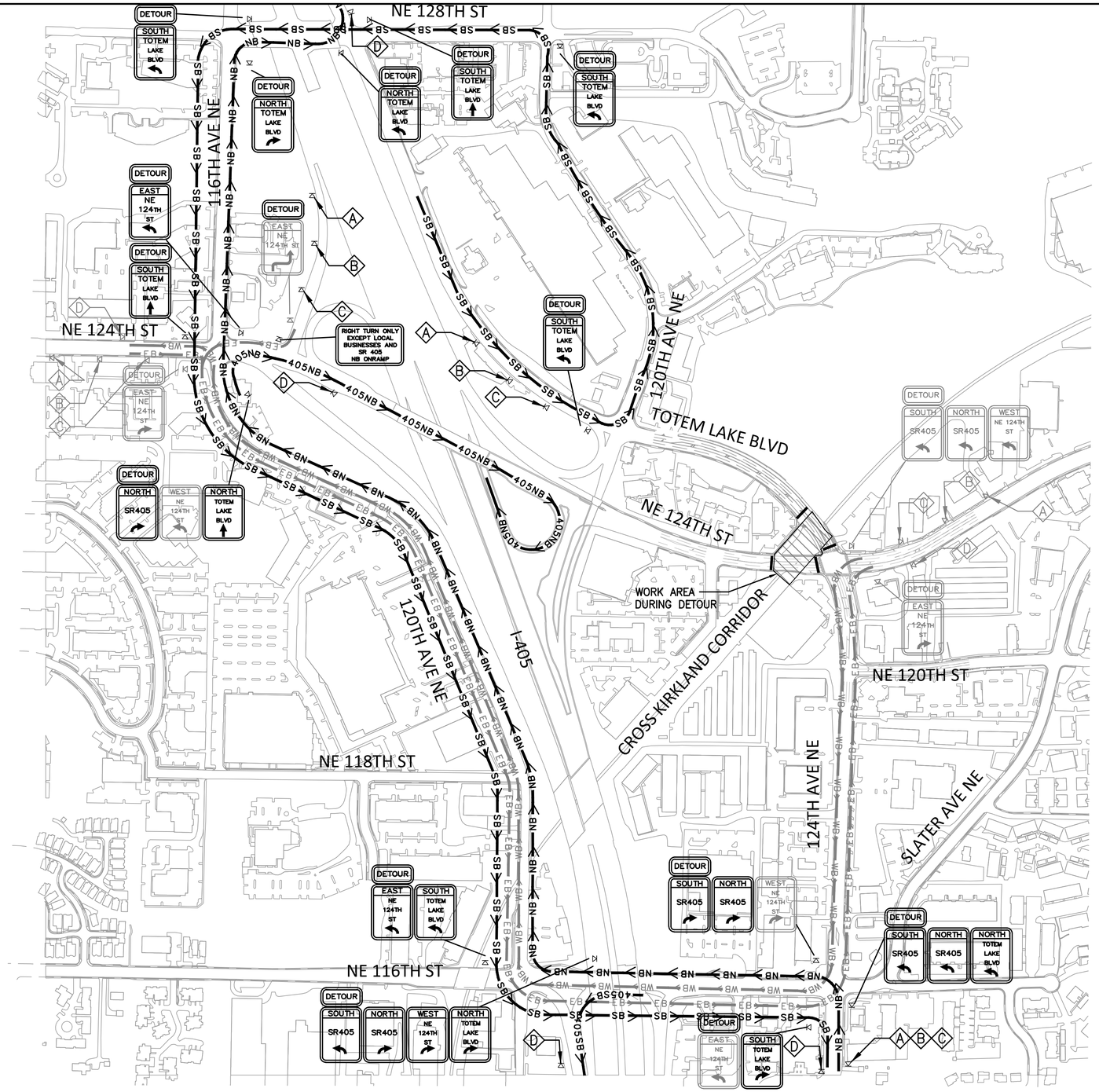

N

250' 125' 0 250' 500'

Scale In Feet

LEGEND

- FLAGGING STATION
- CHANNELIZING DEVICE
- TEMPORARY SIGN LOCATION
- WORK AREA
- TYPE 3 BARRICADE
- NB — NB TRAFFIC ON TOTEM LAKE BLVD
- SB — SB TRAFFIC ON TOTME LAKE BLVD
- EB — EB TRAFFIC ON NE 124TH ST
- WB — WB TRAFFIC ON NE 124TH ST
- 405NB — DETOUR FOR SR405 NB ON-RAMP
- 405SB — DETOUR FOR SR405 SB ON-RAMP
- A — W20-1 ROAD WORK AHEAD
- B — W20-3A ROAD CLOSED AHEAD
- C — W20-2A DETOUR AHEAD
- D — M4-8A END DETOUR

NOTES

1. SEE PROJECT SPECIFICATIONS FOR ADDITIONAL TRAFFIC CONTROL REQUIREMENTS INCLUDING ACCESS FOR USERS AND NIGHT TIME WORK REQUIREMENTS.
2. ALL SIGNS ARE BLACK ON ORANGE UNLESS OTHERWISE NOTED.
3. CONTRACTOR SHALL PROVIDE FLAGGERS AS NEEDED TO FACILITATE INGRESS AND EGRESS AT DRIVEWAYS.
4. CONTRACTOR SHALL PROVIDE FLAGGERS WHERE NEEDED FOR PEDESTRIANS.
5. FLAGGING STATIONS SHALL BE STAFFED ONLY WHEN FLAGGING IS REQUIRED.
6. PHASE CONSTRUCTION TO MAINTAIN A MINIMUM OF ONE VEHICULAR AND ONE PEDESTRIAN ACCESS POINT FOR EACH PROPERTY WITHIN WORK AREA LIMITS AT ALL TIMES.
7. DISTANCES MAY VARY AS APPROVED BY THE ENGINEER.
8. SIGN SPACING, CHANNELIZATION DEVICE SPACING, AND TAPER LENGTH TABLES PER WSDOT WORK ZONE TRAFFIC CONTROL PLANS TCP-1 – TCP-8.
9. ALL BIKE DETOUR ROUTES SHALL HAVE PAVED SURFACING.
10. FOR NIGHT TIME DETOURS, MAINTAIN PAVEMENTS NECESSARY FOR DETOUR TURNING MOVEMENTS.
11. SEE C-187B FOR NE 124TH ST DETOUR.
12. SEE C-181 FOR PEDESTRIAN DETOUR ROUTES.

811 Know what's below. Call before you dig.

CITY OF KIRKLAND
DEPARTMENT OF PUBLIC WORKS
123 FIFTH AVENUE KIRKLAND, WA 98033
(425) 587-3800 www.kirklandwa.gov

NO.	DATE	BY	APPR.	REVISION
0	2019/12/06	NP	ST	ISSUE FOR BID

SAKARU TSUCHIYA — STATE OF WASHINGTON — REGISTERED PROFESSIONAL ENGINEER

COWI MIG SvR

ST	2019/12/06	DESIGNED BY: DATE
JA	2019/12/06	DRAWN BY: DATE
KG	2019/12/06	CHECKED BY: DATE

CITY OF KIRKLAND
TOTEM LAKE PEDESTRIAN BRIDGE
TEMPORARY TRAFFIC CONTROL PLAN
DETOUR FOR NIGHT TIME CLOSURE OF TOTEM LAKE BLVD AND NE 124TH STREET
(DETOUR FOR TOTEM LAKE BLVD)

SHEET: TLC – C –187A

SCALE: AS SHOWN

FILENAME: TLPB_180_TRAFFIC-CNTRL.dwg

File: G:\15c\15094c TLPB\Current\TLPB_180_TRAFFIC-CNTRL.dwg Save Date: Dec 06, 2019 8:43 AM Saved By: JENNIFERA

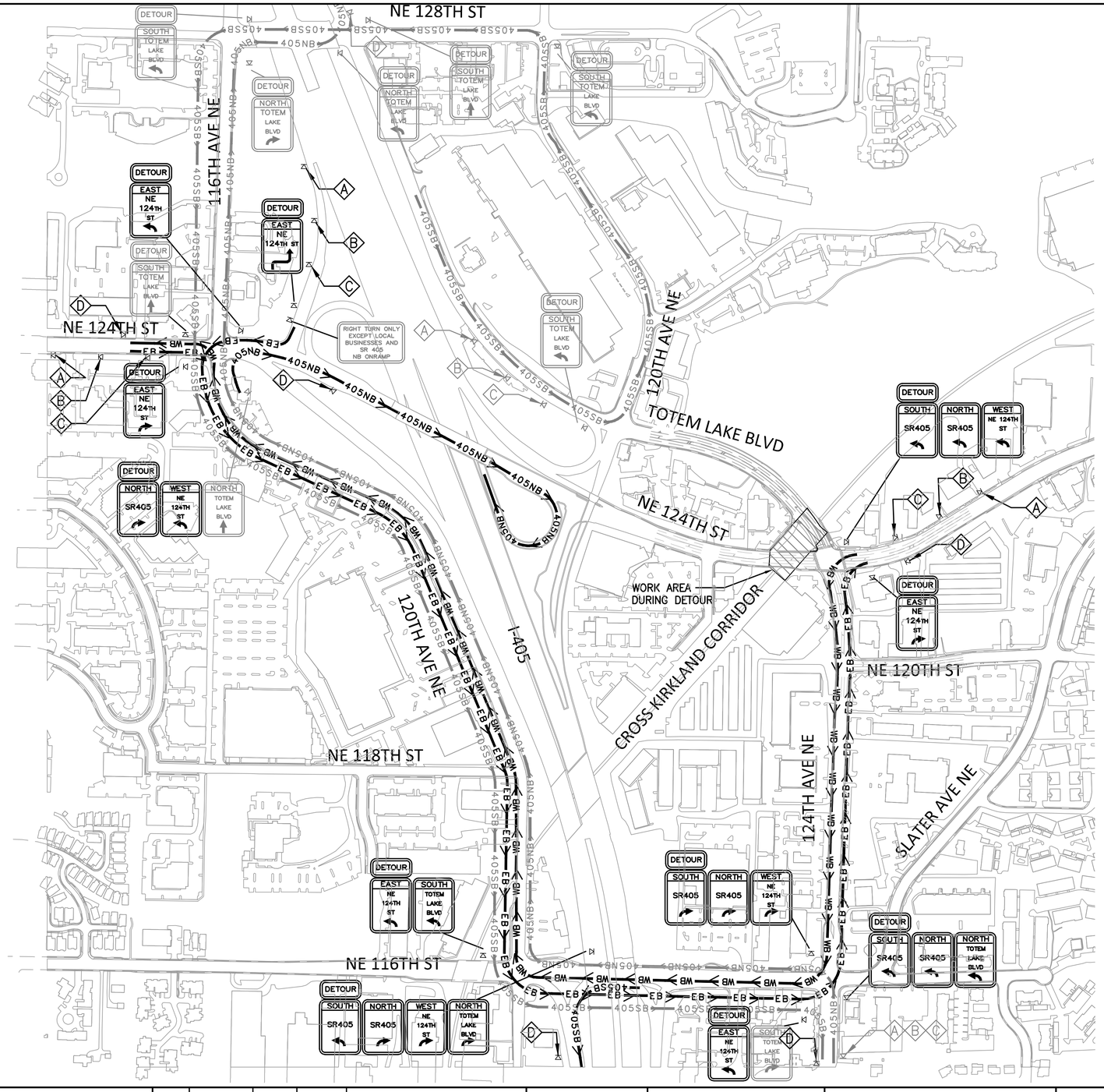

N

250' 125' 0 250' 500'

Scale In Feet

LEGEND

- FLAGGING STATION
- CHANNELIZING DEVICE
- TEMPORARY SIGN LOCATION
- WORK AREA
- TYPE 3 BARRICADE
- NB — NB TRAFFIC ON TOTEM LAKE BLVD
- SB — SB TRAFFIC ON TOTME LAKE BLVD
- EB — EB TRAFFIC ON NE 124TH ST
- WB — WB TRAFFIC ON NE 124TH ST
- 405NB — DETOUR FOR SR405 NB ON–RAMP
- 405SB — DETOUR FOR SR405 SB ON–RAMP
- A — W20–1 ROAD WORK AHEAD
- B — W20–3A ROAD CLOSED AHEAD
- C — W20–2A DETOUR AHEAD
- D — M4–8A END DETOUR

NOTES

1. SEE PROJECT SPECIFICATIONS FOR ADDITIONAL TRAFFIC CONTROL REQUIREMENTS INCLUDING ACCESS FOR USERS AND NIGHT TIME WORK REQUIREMENTS.
2. ALL SIGNS ARE BLACK ON ORANGE UNLESS OTHERWISE NOTED.
3. CONTRACTOR SHALL PROVIDE FLAGGERS AS NEEDED TO FACILITATE INGRESS AND EGRESS AT DRIVEWAYS.
4. CONTRACTOR SHALL PROVIDE FLAGGERS WHERE NEEDED FOR PEDESTRIANS.
5. FLAGGING STATIONS SHALL BE STAFFED ONLY WHEN FLAGGING IS REQUIRED.
6. PHASE CONSTRUCTION TO MAINTAIN A MINIMUM OF ONE VEHICULAR AND ONE PEDESTRIAN ACCESS POINT FOR EACH PROPERTY WITHIN WORK AREA LIMITS AT ALL TIMES.
7. DISTANCES MAY VARY AS APPROVED BY THE ENGINEER.
8. SIGN SPACING, CHANNELIZATION DEVICE SPACING, AND TAPER LENGTH TABLES PER WSDOT WORK ZONE TRAFFIC CONTROL PLANS TCP–1 – TCP–8.
9. ALL BIKE DETOUR ROUTES SHALL HAVE PAVED SURFACING.
10. FOR NIGHT TIME DETOURS, MAINTAIN PAVEMENTS NECESSARY FOR DETOUR TURNING MOVEMENTS.
11. SEE C–187A FOR TOTEM LAKE BLVD DETOUR.
12. SEE C–181 FOR PEDESTRIAN DETOUR ROUTES.

811 Know what's below. Call before you dig.

CITY OF KIRKLAND
DEPARTMENT OF PUBLIC WORKS
123 FIFTH AVENUE KIRKLAND, WA 98033
(425) 587-3800 www.kirklandwa.gov

NO.	DATE	BY	APPR.	REVISION
0	2019/12/06	NP	ST	ISSUE FOR BID

SAKARU TSUCHIYA — STATE OF WASHINGTON — REGISTERED PROFESSIONAL ENGINEER

COWI · MIG · SvR

ST	2019/12/06	DESIGNED BY: DATE
JA	2019/12/06	DRAWN BY: DATE
KG	2019/12/06	CHECKED BY: DATE

CITY OF KIRKLAND
TOTEM LAKE PEDESTRIAN BRIDGE
TEMPORARY TRAFFIC CONTROL PLAN
DETOUR FOR NIGHT TIME CLOSURE OF TOTEM LAKE BLVD AND NE 124TH STREET
(DETOUR FOR NE 124TH ST)

SHEET: TLC – C –187B
SCALE: AS SHOWN
FILENAME: TLPB_180_TRAFFIC–CNTRL.dwg

File: G:\15c\15094c TLPB\Current\TLPB_180_TRAFFIC–CNTRL.dwg Save Date: Dec 06, 2019 8:43 AM Saved By: JENNIFERA

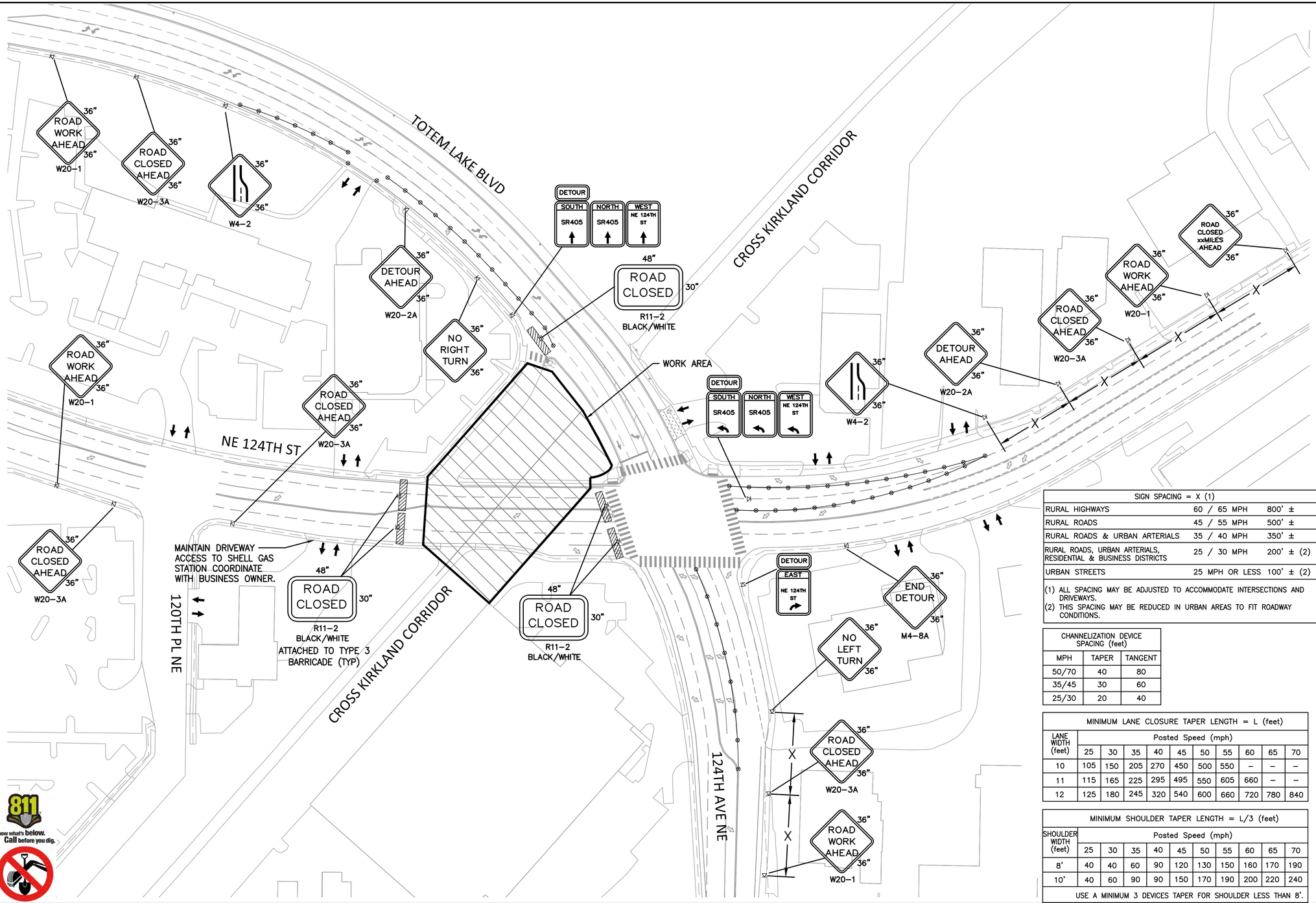

N

50' 25' 0 50' 100'

Scale In Feet

LEGEND

- FLAGGING STATION
- CHANNELIZING DEVICE
- TEMPORARY SIGN LOCATION
- WORK AREA
- TYPE 3 BARRICADE
- DRIVEWAY ACCESS

NOTES

1. SEE PROJECT SPECIFICATIONS FOR ADDITIONAL TRAFFIC CONTROL REQUIREMENTS INCLUDING ACCESS FOR USERS AND NIGHT TIME WORK REQUIREMENTS.
2. ALL SIGNS ARE BLACK ON ORANGE UNLESS OTHERWISE NOTED.
3. CONTRACTOR SHALL PROVIDE FLAGGERS AS NEEDED TO FACILITATE INGRESS AND EGRESS AT DRIVEWAYS.
4. CONTRACTOR SHALL PROVIDE FLAGGERS WHERE NEEDED FOR PEDESTRIANS.
5. FLAGGING STATIONS SHALL BE STAFFED ONLY WHEN FLAGGING IS REQUIRED.
6. PHASE CONSTRUCTION TO MAINTAIN A MINIMUM OF ONE VEHICULAR AND ONE PEDESTRIAN ACCESS POINT FOR EACH PROPERTY WITHIN WORK AREA LIMITS AT ALL TIMES.
7. DISTANCES MAY VARY AS APPROVED BY THE ENGINEER.
8. SIGN SPACING, CHANNELIZATION DEVICE SPACING, AND TAPER LENGTH TABLES PER WSDOT WORK ZONE TRAFFIC CONTROL PLANS TCP–1 – TCP–8.
9. ALL BIKE DETOUR ROUTES SHALL HAVE PAVED SURFACING.
10. FOR NIGHT TIME DETOURS, MAINTAIN PAVEMENTS NECESSARY FOR DETOUR TURNING MOVEMENTS.
11. SEE C–189 FOR DETOUR.
12. SEE C–181 FOR PEDESTRIAN DETOUR ROUTES.

SIGN SPACING = X (1)		
RURAL HIGHWAYS	60 / 65 MPH	800' ±
RURAL ROADS	45 / 55 MPH	500' ±
RURAL ROADS & URBAN ARTERIALS	35 / 40 MPH	350' ±
RURAL ROADS, URBAN ARTERIALS, RESIDENTIAL & BUSINESS DISTRICTS	25 / 30 MPH	200' ± (2)
URBAN STREETS	25 MPH OR LESS	100' ± (2)

(1) ALL SPACING MAY BE ADJUSTED TO ACCOMMODATE INTERSECTIONS AND DRIVEWAYS.
(2) THIS SPACING MAY BE REDUCED IN URBAN AREAS TO FIT ROADWAY CONDITIONS.

CHANNELIZATION DEVICE SPACING (feet)		
MPH	TAPER	TANGENT
50/70	40	80
35/45	30	60
25/30	20	40

MINIMUM LANE CLOSURE TAPER LENGTH = L (feet)										
LANE WIDTH (feet)	Posted Speed (mph)									
	25	30	35	40	45	50	55	60	65	70
10	105	150	205	270	450	500	550	–	–	–
11	115	165	225	295	495	550	605	660	–	–
12	125	180	245	320	540	600	660	720	780	840

MINIMUM SHOULDER TAPER LENGTH = L/3 (feet)										
SHOULDER WIDTH (feet)	Posted Speed (mph)									
	25	30	35	40	45	50	55	60	65	70
8'	40	40	60	90	120	130	150	160	170	190
10'	40	60	90	90	150	170	190	200	220	240

USE A MINIMUM 3 DEVICES TAPER FOR SHOULDER LESS THAN 8'.

CITY OF KIRKLAND
DEPARTMENT OF PUBLIC WORKS
123 FIFTH AVENUE KIRKLAND, WA 98033
(425) 587-3800 www.kirklandwa.gov

NO.	DATE	BY	APPR.	REVISION
0	2019/12/06	NP	ST	ISSUE FOR BID

SAKARU TSUCHIYA — STATE OF WASHINGTON — REGISTERED PROFESSIONAL ENGINEER

COWI

MIG | SvR

ST	2019/12/06	DESIGNED BY: DATE
JA	2019/12/06	DRAWN BY: DATE
KG	2019/12/06	CHECKED BY: DATE

CITY OF KIRKLAND
TOTEM LAKE PEDESTRIAN BRIDGE

TEMPORARY TRAFFIC CONTROL PLAN
NIGHT TIME CLOSURE OF
NE 124TH STREET

SHEET: TLC – C –188

SCALE: AS SHOWN

FILENAME: TLPB_180_TRAFFIC–CNTRL.dwg

File: G:\15c\15094c TLPB\Current\TLPB_180_TRAFFIC–CNTRL.dwg Save Date: Dec 06, 2019 8:43 AM Saved By: JENNIFERA

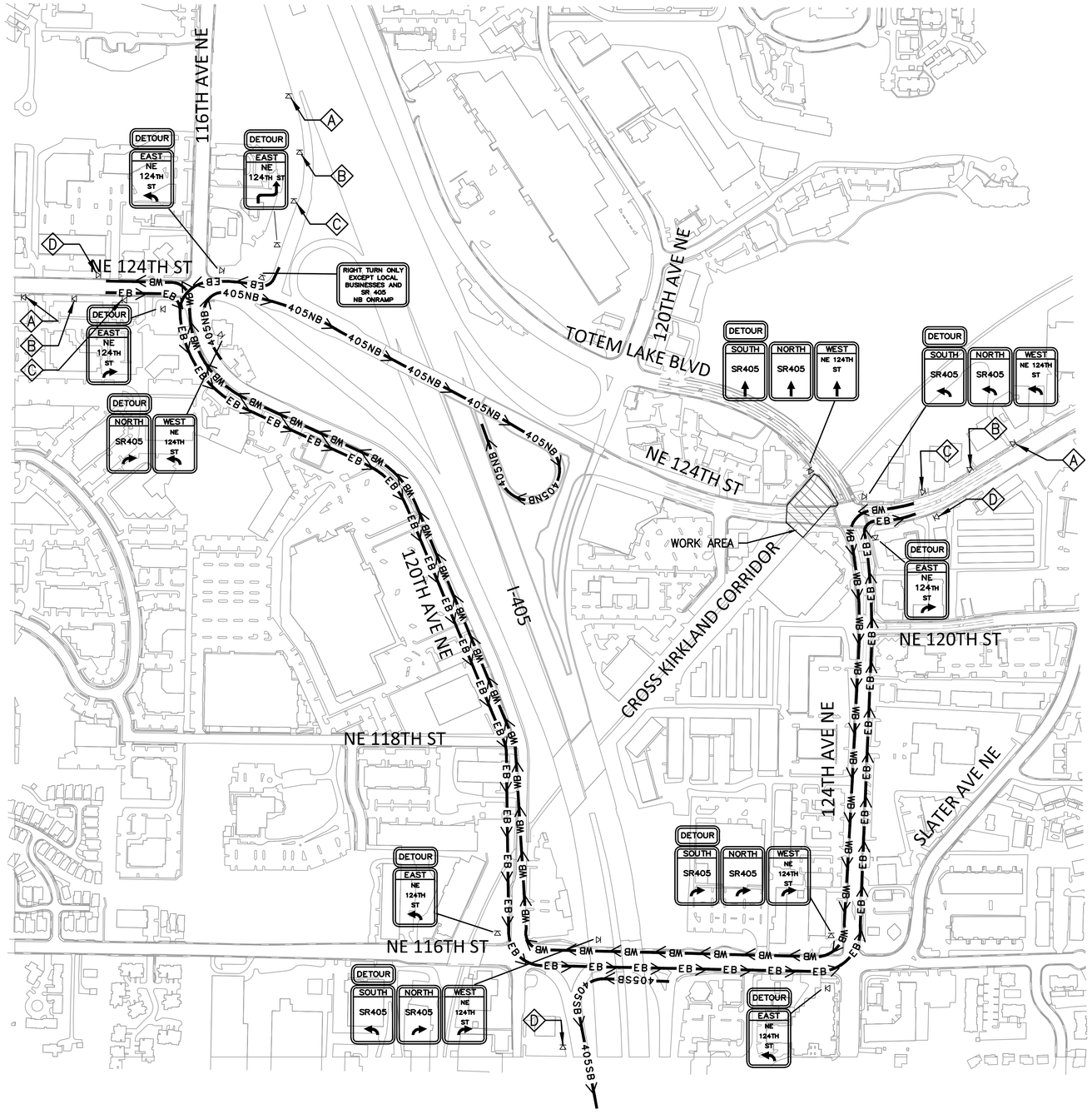

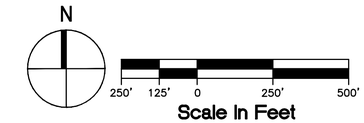

LEGEND

- FLAGGING STATION
- CHANNELIZING DEVICE
- TEMPORARY SIGN LOCATION
- WORK AREA
- TYPE 3 BARRICADE
- NB — NB TRAFFIC ON TOTEM LAKE BLVD
- SB — SB TRAFFIC ON TOTME LAKE BLVD
- EB — EB TRAFFIC ON NE 124TH ST
- WB — WB TRAFFIC ON NE 124TH ST
- 405NB — DETOUR FOR SR405 NB ON–RAMP
- 405SB — DETOUR FOR SR405 SB ON–RAMP
- A — W20–1 ROAD WORK AHEAD
- B — W20–3A ROAD CLOSED AHEAD
- C — W20–2A DETOUR AHEAD
- D — M4–8A END DETOUR

NOTES

1. SEE PROJECT SPECIFICATIONS FOR ADDITIONAL TRAFFIC CONTROL REQUIREMENTS INCLUDING ACCESS FOR USERS AND NIGHT TIME WORK REQUIREMENTS.
2. ALL SIGNS ARE BLACK ON ORANGE UNLESS OTHERWISE NOTED.
3. CONTRACTOR SHALL PROVIDE FLAGGERS AS NEEDED TO FACILITATE INGRESS AND EGRESS AT DRIVEWAYS.
4. CONTRACTOR SHALL PROVIDE FLAGGERS WHERE NEEDED FOR PEDESTRIANS.
5. FLAGGING STATIONS SHALL BE STAFFED ONLY WHEN FLAGGING IS REQUIRED.
6. PHASE CONSTRUCTION TO MAINTAIN A MINIMUM OF ONE VEHICULAR AND ONE PEDESTRIAN ACCESS POINT FOR EACH PROPERTY WITHIN WORK AREA LIMITS AT ALL TIMES.
7. DISTANCES MAY VARY AS APPROVED BY THE ENGINEER.
8. SIGN SPACING, CHANNELIZATION DEVICE SPACING, AND TAPER LENGTH TABLES PER WSDOT WORK ZONE TRAFFIC CONTROL PLANS TCP–1 – TCP–8.
9. ALL BIKE DETOUR ROUTES SHALL HAVE PAVED SURFACING.
10. FOR NIGHT TIME DETOURS, MAINTAIN PAVEMENTS NECESSARY FOR DETOUR TURNING MOVEMENTS.
11. SEE C–188 FOR TCP DETAIL NEAR WORK AREA.
12. SEE C–181 FOR PEDESTRIAN DETOUR ROUTES.

811 Know what's below. Call before you dig.

CITY OF KIRKLAND
DEPARTMENT OF PUBLIC WORKS
123 FIFTH AVENUE KIRKLAND, WA 98033
(425) 587-3800 www.kirklandwa.gov

NO.	DATE	BY	APPR.	REVISION
0	2019/12/06	NP	ST	ISSUE FOR BID

SAKARU TSUCHIYA — STATE OF WASHINGTON — REGISTERED PROFESSIONAL ENGINEER

COWI MIG SvR

ST — DESIGNED BY:	2019/12/06 DATE
JA — DRAWN BY:	2019/12/06 DATE
KG — CHECKED BY:	2019/12/06 DATE

CITY OF KIRKLAND
TOTEM LAKE PEDESTRIAN BRIDGE

TEMPORARY TRAFFIC CONTROL PLAN
DETOUR FOR NIGHT TIME CLOSURE OF
NE 124TH STREET

SHEET: TLC – C –189
SCALE: AS SHOWN
FILENAME: TLPB_180_TRAFFIC–CNTRL.dwg

File: G:\15c\15094c TLPB\Current\TLPB_180_TRAFFIC–CNTRL.dwg Save Date: Dec 06, 2019 8:43 AM Saved By: JENNIFERA

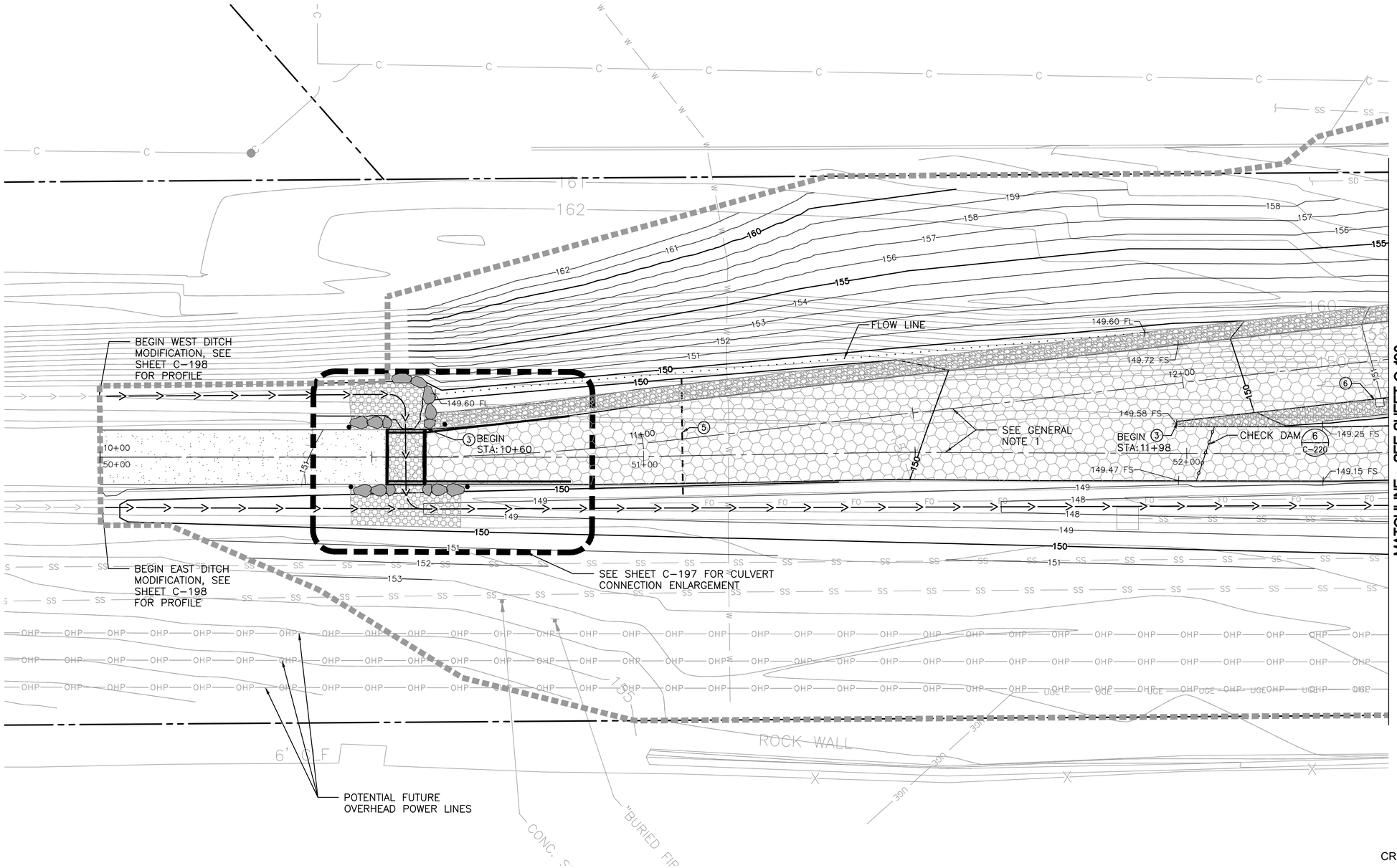

N

10' 5' 0 10' 20'

Scale In Feet

LEGEND

- PROPERTY LINE
- APPROXIMATE LIMITS OF WORK
- MSE WALL, SEE GENERAL NOTE 2
- RESTORED DITCH (1/3 C-221)
- INFILTRATION POND (4-6 C-221)
- STORM SEWER PIPE, TYPE AND SIZE PER PLANS
- POROUS ASPHALT TRAIL (2 C-220)
- CRUSHED SURFACING FOR TRAIL, 4" DEPTH
- GRAVEL SHOULDER (2 C-221)
- XXX.XX SPOT ELEVATION
- SWALE (1/4 C-221)
- FS/FL FINISHED SURFACE/FLOW LINE
- CONC/STEEL PIER, CONC ABUTMENT WALL, SEE STRUCTURAL PLANS
- MAJOR CONTOUR (5')
- MINOR CONTOUR (1')
- SPLIT RAIL FENCE (2 C-222)
- GUARDRAIL, SEE SHEET S-223
- REINFORCED LAWN SURFACING (7 C-220)

CONSTRUCTION NOTES

1. 1' GRAVEL SHOULDER
2. 2' GRAVEL SHOULDER
3. 3' GRAVEL SHOULDER
4. REINSTALL SIGN PER COK STD PLAN CK-R.43
5. INSTALL IRRIGATION SLEEVE PER L-210A/B, MAX SPACING 200'
6. LIGHT FOUNDATION/JUNCTION BOX, SEE ELECTRICAL
7. CRITICAL AREA SIGN ON SPLIT RAIL FENCE (1/2 C-222)

GENERAL NOTES

1. SEE S-103 TO S-107 FOR TRAIL ALIGNMENT DATA AND TYPICAL TRAIL SECTIONS.
2. SEE S-108 TO S-114 FOR MSE WALL PROFILE AND SECTIONS.

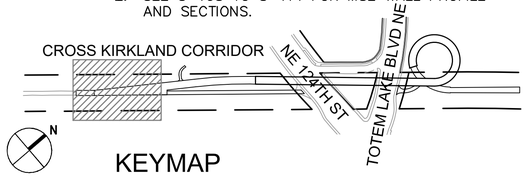

KEYMAP

CITY OF KIRKLAND
DEPARTMENT OF PUBLIC WORKS
123 FIFTH AVENUE KIRKLAND, WA 98033
(425) 587-3800 www.kirklandwa.gov

NO.	DATE	BY	APPR.	REVISION
0	2019/12/06	NP	DR	ISSUE FOR BID

NATHAN ALAN POLANSKI — STATE OF WASHINGTON — REGISTERED PROFESSIONAL ENGINEER — 12-5-19

COWI · MIG · SvR

DR	2019/12/06	DESIGNED BY: DATE
JA	2019/12/06	DRAWN BY: DATE
KG	2019/12/06	CHECKED BY: DATE

CITY OF KIRKLAND
TOTEM LAKE PEDESTRIAN BRIDGE

GRADING AND DRAINAGE PLAN 1

SHEET: TLC – C –191

SCALE: AS SHOWN

FILENAME: TLPB_190_GRADE-DRAIN.dwg

File: G:\15c\15094c TLPB\Current\TLPB_190_GRADE-DRAIN.dwg Save Date: Dec 06, 2019 9:54 AM Saved By: JENNIFERA

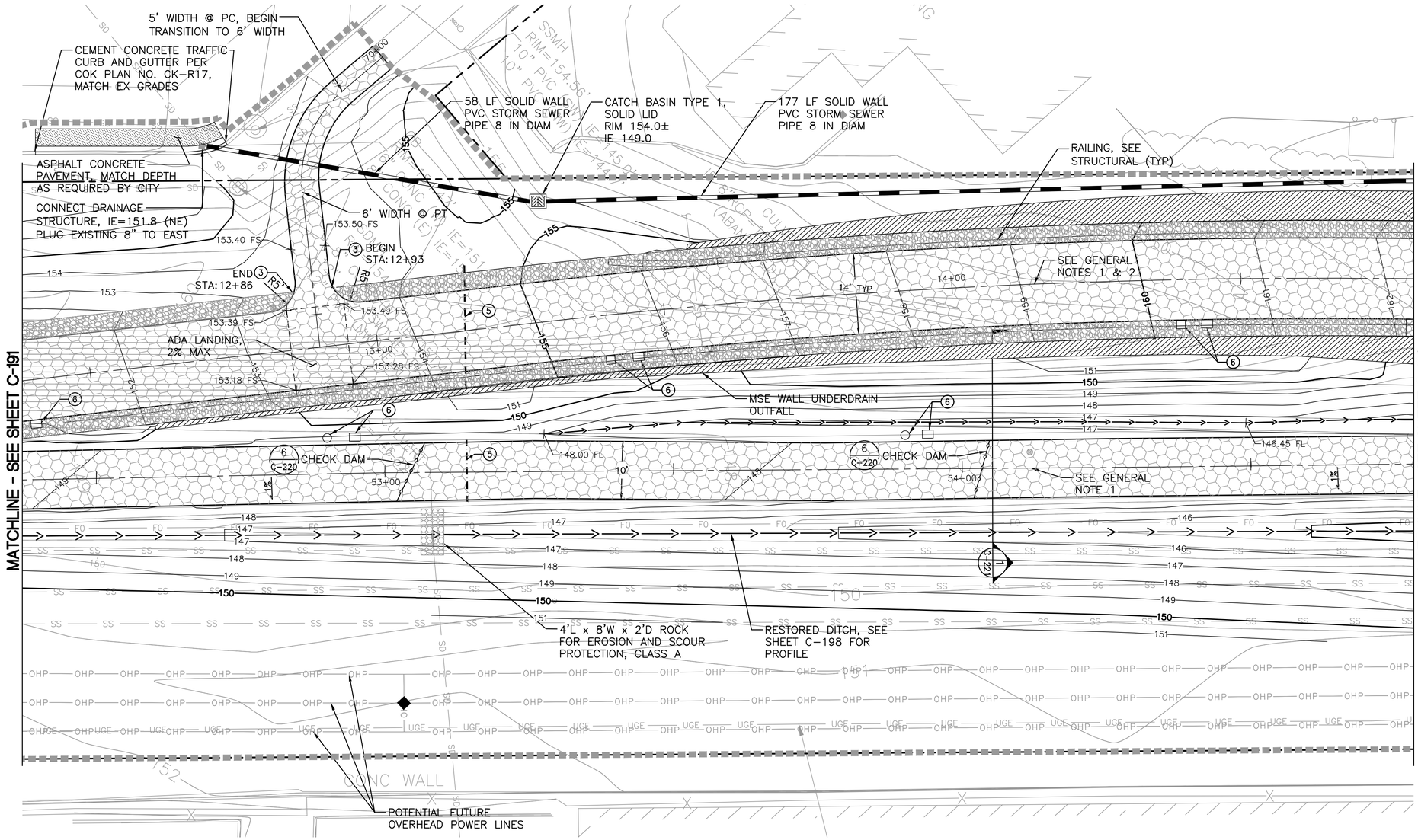

N

10' 5' 0 10' 20'

Scale In Feet

LEGEND

- PROPERTY LINE
- APPROXIMATE LIMITS OF WORK
- MSE WALL, SEE GENERAL NOTE 2
- RESTORED DITCH (1/3 C-221)
- INFILTRATION POND (4-6 C-221)
- STORM SEWER PIPE, TYPE AND SIZE PER PLANS
- POROUS ASPHALT TRAIL (2 C-220)
- CRUSHED SURFACING FOR TRAIL, 4" DEPTH
- GRAVEL SHOULDER (2 C-221)
- XXX.XX SPOT ELEVATION
- SWALE (1/4 C-221)
- FS/FL FINISHED SURFACE/FLOW LINE
- CONC/STEEL PIER, CONC ABUTMENT WALL, SEE STRUCTURAL PLANS
- MAJOR CONTOUR (5')
- MINOR CONTOUR (1')
- SPLIT RAIL FENCE (2 C-222)
- GUARDRAIL, SEE SHEET S-223
- REINFORCED LAWN SURFACING (7 C-220)

CONSTRUCTION NOTES

1. 1' GRAVEL SHOULDER
2. 2' GRAVEL SHOULDER
3. 3' GRAVEL SHOULDER
4. REINSTALL SIGN PER COK STD PLAN CK-R.43
5. INSTALL IRRIGATION SLEEVE PER L-210A/B, MAX SPACING 200'
6. LIGHT FOUNDATION/JUNCTION BOX, SEE ELECTRICAL
7. CRITICAL AREA SIGN ON SPLIT RAIL FENCE (1/2 C-222)

GENERAL NOTES

1. SEE S-103 TO S-107 FOR TRAIL ALIGNMENT DATA AND TYPICAL TRAIL SECTIONS.
2. SEE S-108 TO S-114 FOR MSE WALL PROFILE AND SECTIONS.

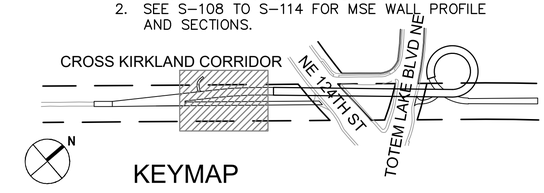

CITY OF KIRKLAND
DEPARTMENT OF PUBLIC WORKS
123 FIFTH AVENUE KIRKLAND, WA 98033
(425) 587-3800 www.kirklandwa.gov

NO.	DATE	BY	APPR.	REVISION
0	2019/12/06	NP	DR	ISSUE FOR BID

NATHAN ALAN POLANSKI, STATE OF WASHINGTON, REGISTERED PROFESSIONAL ENGINEER, 12-5-19

COWI MIG SvR

DR 2019/12/06 DESIGNED BY: DATE
JA 2019/12/06 DRAWN BY: DATE
KG 2019/12/06 CHECKED BY: DATE

CITY OF KIRKLAND
TOTEM LAKE PEDESTRIAN BRIDGE

GRADING AND DRAINAGE PLAN 2

SHEET: TLC – C –192
SCALE: AS SHOWN
FILENAME: TLPB_190_GRADE-DRAIN.dwg

File: G:\15c\15094c TLPB\Current\TLPB_190_GRADE-DRAIN.dwg Save Date: Dec 06, 2019 9:54 AM Saved By: JENNIFERA

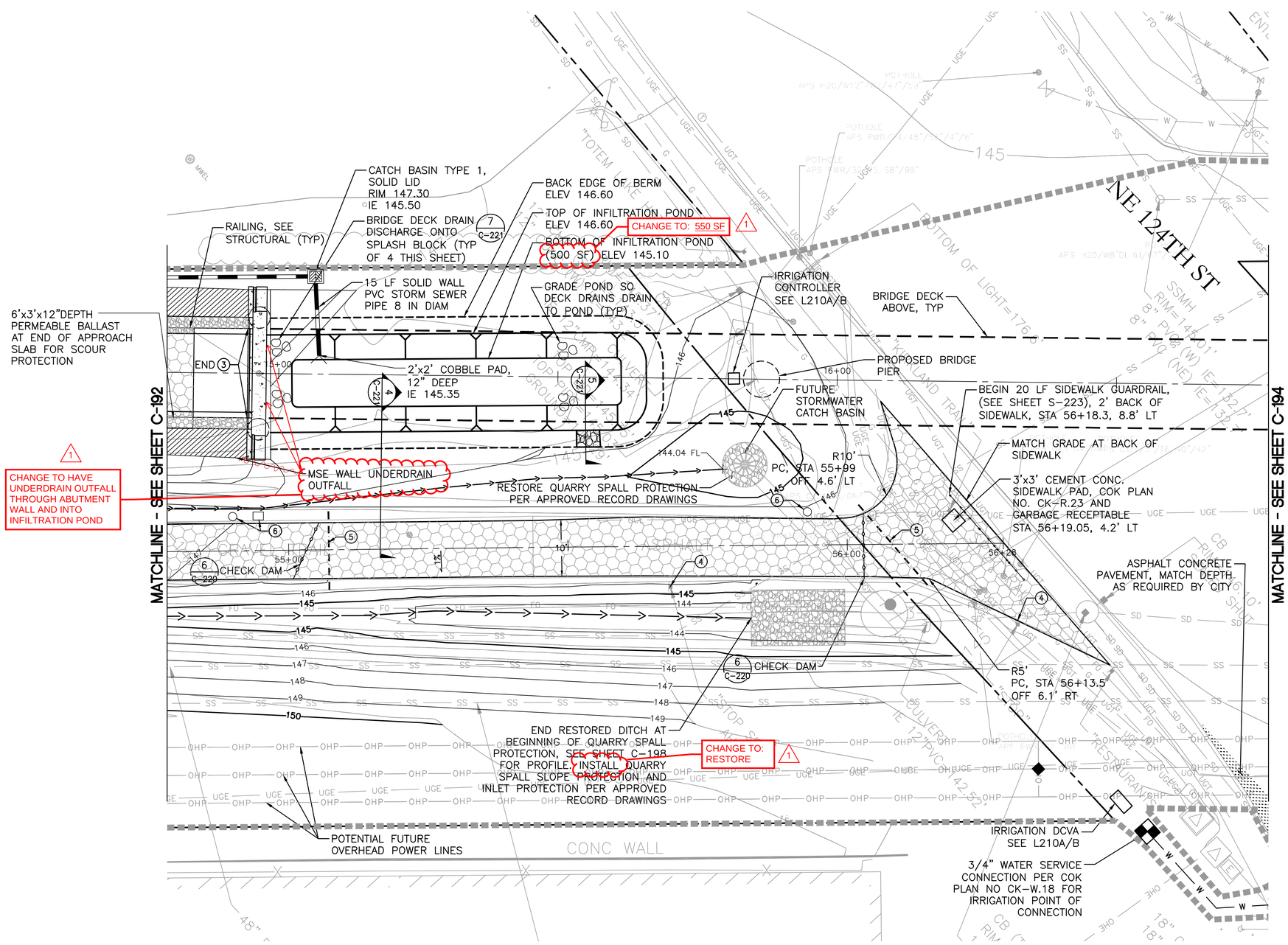

N

10' 5' 0 10' 20'

Scale In Feet

LEGEND

- PROPERTY LINE
- APPROXIMATE LIMITS OF WORK
- MSE WALL, SEE GENERAL NOTE 2
- RESTORED DITCH (1/3 C-221)
- INFILTRATION POND (4-6 C-221)
- STORM SEWER PIPE, TYPE AND SIZE PER PLANS
- POROUS ASPHALT TRAIL (2 C-220)
- CRUSHED SURFACING FOR TRAIL, 4" DEPTH
- GRAVEL SHOULDER (2 C-221)
- XXX.XX SPOT ELEVATION
- SWALE (1/4 C-221)
- FS/FL FINISHED SURFACE/FLOW LINE
- CONC/STEEL PIER, CONC ABUTMENT WALL, SEE STRUCTURAL PLANS
- MAJOR CONTOUR (5')
- MINOR CONTOUR (1')
- SPLIT RAIL FENCE (2 C-222)
- GUARDRAIL, SEE SHEET S-223
- REINFORCED LAWN SURFACING (7 C-220)

CONSTRUCTION NOTES

1. 1' GRAVEL SHOULDER
2. 2' GRAVEL SHOULDER
3. 3' GRAVEL SHOULDER
4. REINSTALL SIGN PER COK STD PLAN CK-R.43
5. INSTALL IRRIGATION SLEEVE PER L-210A/B, MAX SPACING 200'
6. LIGHT FOUNDATION/JUNCTION BOX, SEE ELECTRICAL
7. CRITICAL AREA SIGN ON SPLIT RAIL FENCE (1/2 C-222)

GENERAL NOTES

1. SEE S-103 TO S-107 FOR TRAIL ALIGNMENT DATA AND TYPICAL TRAIL SECTIONS.
2. SEE S-108 TO S-114 FOR MSE WALL PROFILE AND SECTIONS.

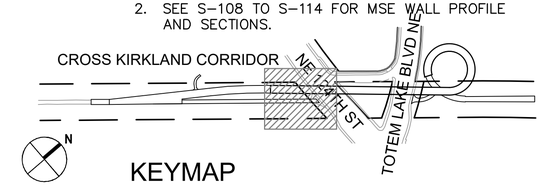

KEYMAP

CITY OF KIRKLAND
DEPARTMENT OF PUBLIC WORKS
123 FIFTH AVENUE KIRKLAND, WA 98033
(425) 587-3800 www.kirklandwa.gov

NO.	DATE	BY	APPR.	REVISION
1	2020/03/09	NP	DR	ADDENDUM 3
0	2019/12/06	NP	DR	ISSUE FOR BID

NATHAN ALAN POLANSKI — STATE OF WASHINGTON — REGISTERED PROFESSIONAL ENGINEER — 12-5-19

COWI

MIG | SvR

DR	2019/12/06	DESIGNED BY: DATE
JA	2019/12/06	DRAWN BY: DATE
KG	2019/12/06	CHECKED BY: DATE

CITY OF KIRKLAND
TOTEM LAKE PEDESTRIAN BRIDGE

GRADING AND DRAINAGE PLAN 3

SHEET: TLC – C –193

SCALE: AS SHOWN

FILENAME: TLPB_190_GRADE-DRAIN.dwg

File: G:\15c\15094c TLPB\Current\TLPB_190_GRADE-DRAIN.dwg Save Date: Dec 06, 2019 9:54 AM Saved By: JENNIFERA

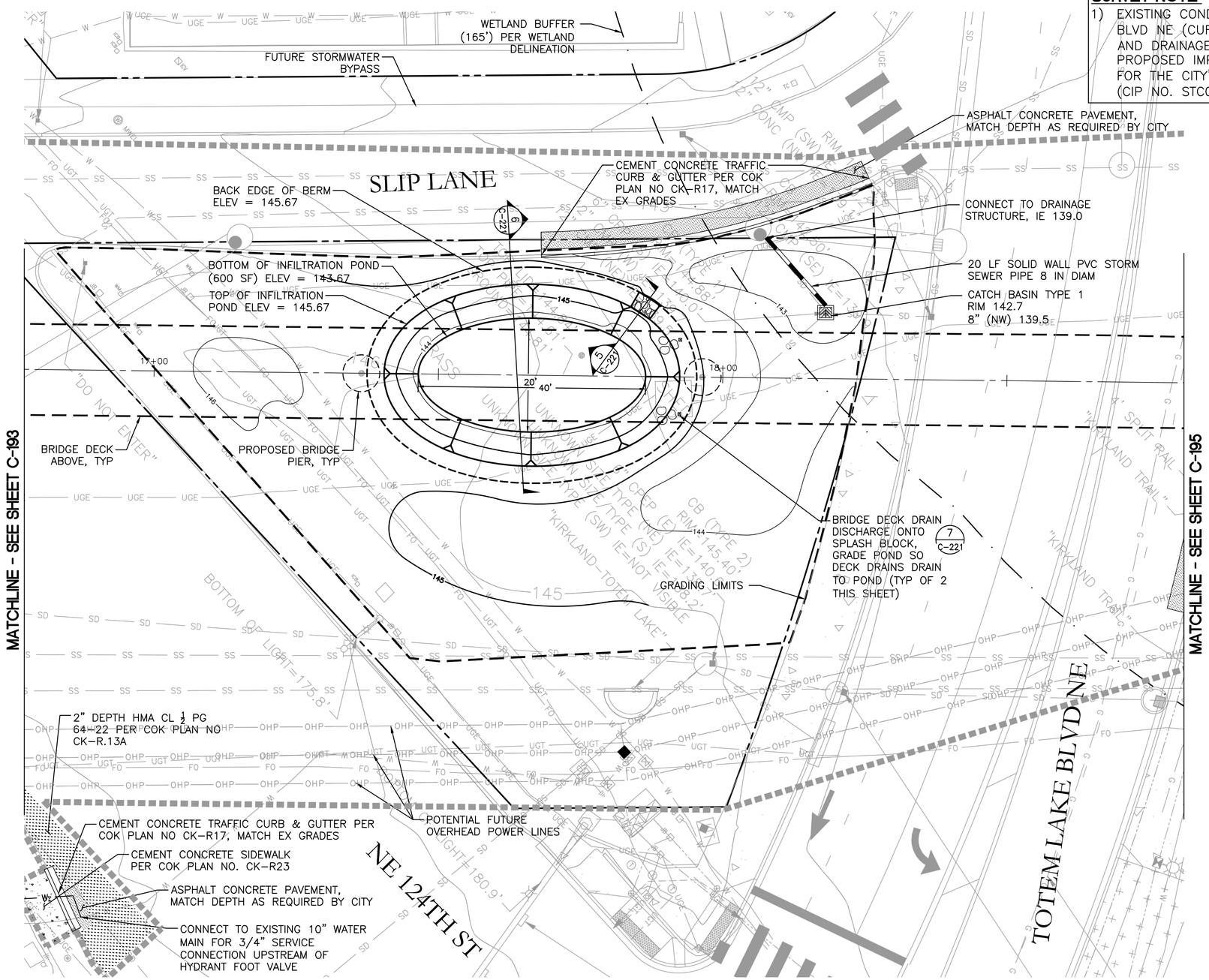

SURVEY NOTE:

1) EXISTING CONDITIONS SHOWN ALONG TOTEM LAKE BLVD NE (CURB ALIGNMENT, SIDEWALK, STRIPING AND DRAINAGE STRUCTURES) ARE BASED ON PROPOSED IMPROVEMENTS SHOWN IN THE BID SET FOR THE CITY'S TOTEM LAKE GATEWAY PROJECT (CIP NO. STC006050).

N

10' 5' 0 10' 20'
Scale In Feet

LEGEND

- PROPERTY LINE
- APPROXIMATE LIMITS OF WORK
- MSE WALL, SEE GENERAL NOTE 2
- RESTORED DITCH (1/3 C-221)
- INFILTRATION POND (4-6 C-221)
- STORM SEWER PIPE, TYPE AND SIZE PER PLANS
- POROUS ASPHALT TRAIL (2 C-220)
- CRUSHED SURFACING FOR TRAIL, 4" DEPTH
- GRAVEL SHOULDER (2 C-221)
- XXX.XX SPOT ELEVATION
- SWALE (1/4 C-221)
- FS/FL FINISHED SURFACE/FLOW LINE
- CONC/STEEL PIER, CONC ABUTMENT WALL, SEE STRUCTURAL PLANS
- MAJOR CONTOUR (5')
- MINOR CONTOUR (1')
- SPLIT RAIL FENCE (2 C-222)
- GUARDRAIL, SEE SHEET S-223
- REINFORCED LAWN SURFACING (7 C-220)

CONSTRUCTION NOTES

1. 1' GRAVEL SHOULDER
2. 2' GRAVEL SHOULDER
3. 3' GRAVEL SHOULDER
4. REINSTALL SIGN PER COK STD PLAN CK-R.43
5. INSTALL IRRIGATION SLEEVE PER L-210A/B, MAX SPACING 200'
6. LIGHT FOUNDATION/JUNCTION BOX, SEE ELECTRICAL
7. CRITICAL AREA SIGN ON SPLIT RAIL FENCE (1/2 C-222)

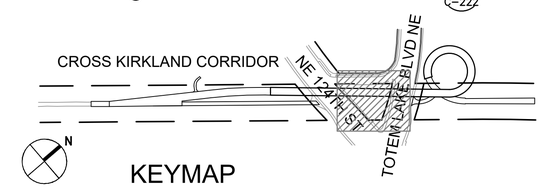

CITY OF KIRKLAND
DEPARTMENT OF PUBLIC WORKS
123 FIFTH AVENUE KIRKLAND, WA 98033
(425) 587-3800 www.kirklandwa.gov

NO.	DATE	BY	APPR.	REVISION
0	2019/12/06	NP	DR	ISSUE FOR BID

NATHAN ALAN POLANSKI, STATE OF WASHINGTON, REGISTERED PROFESSIONAL ENGINEER, 38500, 12-5-19

COWI
MIG | SvR

DR	2019/12/06	
DESIGNED BY:	DATE	
JA	2019/12/06	
DRAWN BY:	DATE	
KG	2019/12/06	
CHECKED BY:	DATE	

CITY OF KIRKLAND
TOTEM LAKE PEDESTRIAN BRIDGE

GRADING AND DRAINAGE PLAN 4

SHEET: TLC – C –194
SCALE: AS SHOWN
FILENAME: TLPB_190_GRADE-DRAIN.dwg

File: G:\15c\15094c TLPB\Current\TLPB_190_GRADE-DRAIN.dwg Save Date: Dec 06, 2019 9:54 AM Saved By: JENNIFERA

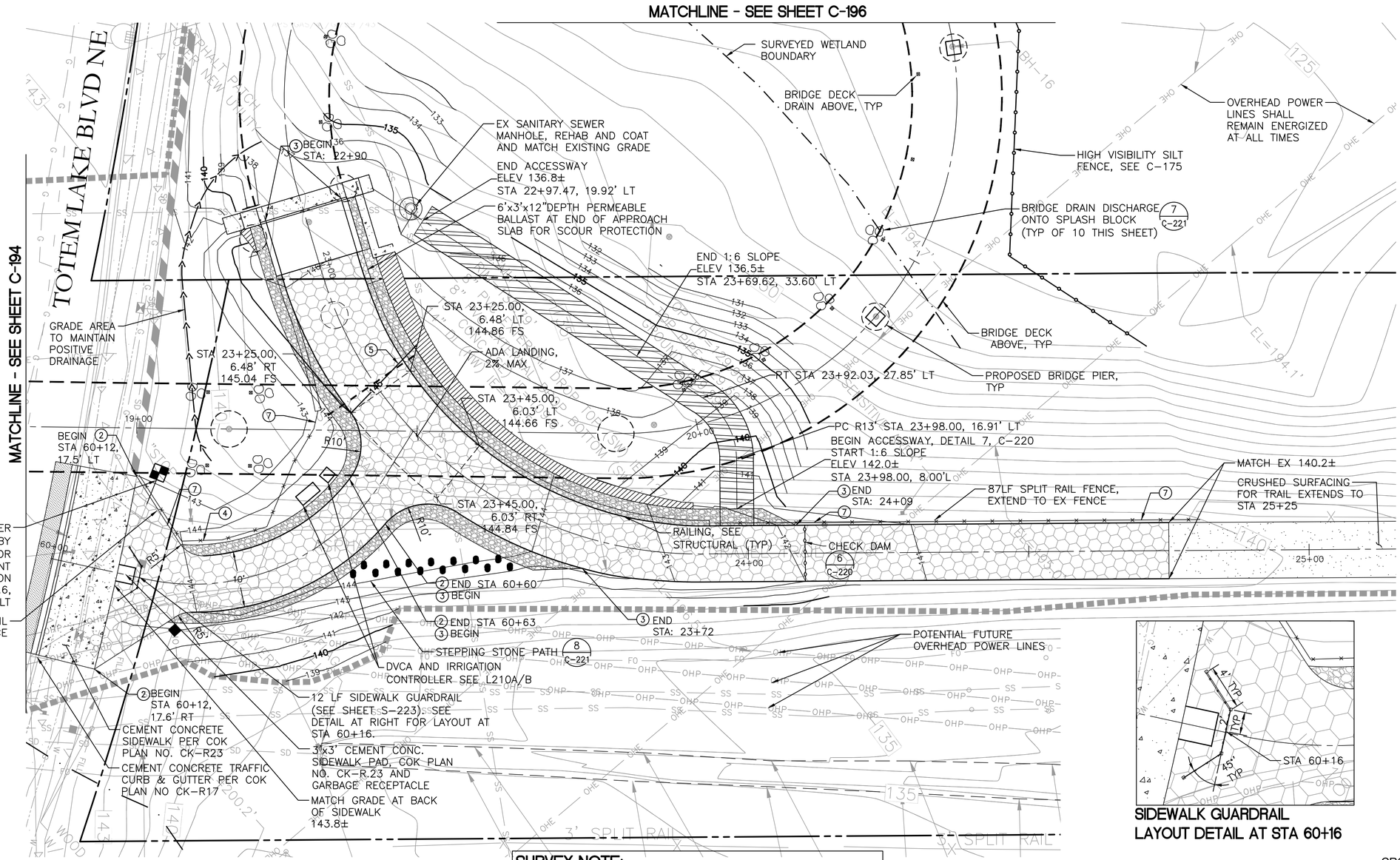

SIDEWALK GUARDRAIL LAYOUT DETAIL AT STA 60+16

N

10' 5' 0 10' 20'

Scale In Feet

LEGEND

- PROPERTY LINE
- APPROXIMATE LIMITS OF WORK
- MSE WALL, SEE GENERAL NOTE 2
- RESTORED DITCH (1/3 C-221)
- INFILTRATION POND (4-6 C-221)
- STORM SEWER PIPE, TYPE AND SIZE PER PLANS
- POROUS ASPHALT TRAIL (2 C-220)
- CRUSHED SURFACING FOR TRAIL, 4" DEPTH
- GRAVEL SHOULDER (2 C-221)
- XXX.XX SPOT ELEVATION
- SWALE (1/4 C-221)
- FS/FL FINISHED SURFACE/FLOW LINE
- CONC/STEEL PIER, CONC ABUTMENT WALL, SEE STRUCTURAL PLANS
- MAJOR CONTOUR (5')
- MINOR CONTOUR (1')
- SPLIT RAIL FENCE (2 C-222)
- GUARDRAIL, SEE SHEET S-223
- REINFORCED LAWN SURFACING (7 C-220)

CONSTRUCTION NOTES

1. 1' GRAVEL SHOULDER
2. 2' GRAVEL SHOULDER
3. 3' GRAVEL SHOULDER
4. REINSTALL SIGN PER COK STD PLAN CK-R.43
5. INSTALL IRRIGATION SLEEVE PER L-210A/B, MAX SPACING 200'
6. LIGHT FOUNDATION/JUNCTION BOX, SEE ELECTRICAL
7. CRITICAL AREA SIGN ON SPLIT RAIL FENCE (1/2 C-222)

SURVEY NOTE:

1) EXISTING CONDITIONS SHOWN ALONG TOTEM LAKE BLVD NE (CURB ALIGNMENT, SIDEWALK, STRIPING AND DRAINAGE STRUCTURES) ARE BASED ON PROPOSED IMPROVEMENTS SHOWN IN THE BID SET FOR THE CITY'S TOTEM LAKE GATEWAY PROJECT (CIP NO. STC006050).

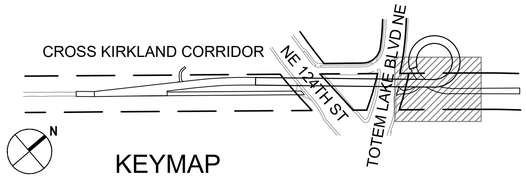

KEYMAP

CITY OF KIRKLAND
DEPARTMENT OF PUBLIC WORKS
123 FIFTH AVENUE KIRKLAND, WA 98033
(425) 587-3800 www.kirklandwa.gov

NO.	DATE	BY	APPR.	REVISION
0	2019/12/06	NP	DR	PERMIT UPDATES

NATHAN ALAN POLANSKI, STATE OF WASHINGTON, REGISTERED PROFESSIONAL ENGINEER, 12-5-19

COWI

MIG | SvR

DR	2019/12/06	DESIGNED BY: DATE
JA	2019/12/06	DRAWN BY: DATE
KG	2019/12/06	CHECKED BY: DATE

CITY OF KIRKLAND
TOTEM LAKE PEDESTRIAN BRIDGE

GRADING AND DRAINAGE PLAN 5

SHEET: TLC – C –195

SCALE: AS SHOWN

FILENAME: TLPB_190_GRADE-DRAIN.dwg

File: G:\15c\15094c TLPB\Current\TLPB_190_GRADE-DRAIN.dwg Save Date: Dec 06, 2019 9:54 AM Saved By: JENNIFERA

SURVEY NOTE:

1) EXISTING CONDITIONS SHOWN ALONG TOTEM LAKE BLVD NE (CURB ALIGNMENT, SIDEWALK, STRIPING AND DRAINAGE STRUCTURES) ARE BASED ON PROPOSED IMPROVEMENTS SHOWN IN THE BID SET FOR THE CITY'S TOTEM LAKE GATEWAY PROJECT (CIP NO. STC006050).

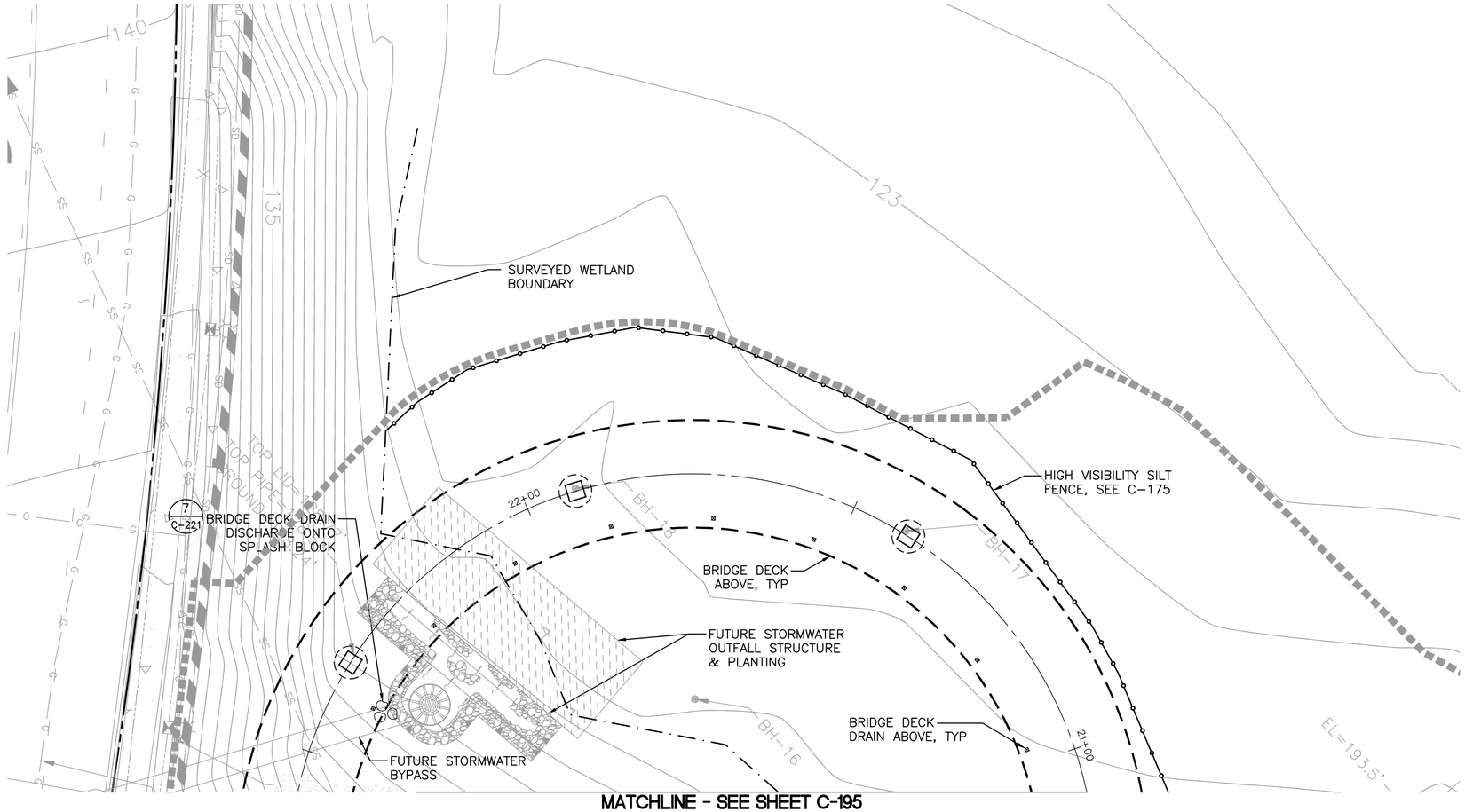

N

10' 5' 0 10' 20'

Scale In Feet

LEGEND

- PROPERTY LINE
- APPROXIMATE LIMITS OF WORK
- MSE WALL, SEE GENERAL NOTE 2
- RESTORED DITCH (1/3 C-221)
- INFILTRATION POND (4-6 C-221)
- STORM SEWER PIPE, TYPE AND SIZE PER PLANS
- POROUS ASPHALT TRAIL (2 C-220)
- CRUSHED SURFACING FOR TRAIL, 4" DEPTH
- GRAVEL SHOULDER (2 C-221)
- XXX.XX SPOT ELEVATION
- SWALE (1/4 C-221)
- FS/FL FINISHED SURFACE/FLOW LINE
- CONC/STEEL PIER, CONC ABUTMENT WALL, SEE STRUCTURAL PLANS
- MAJOR CONTOUR (5')
- MINOR CONTOUR (1')
- SPLIT RAIL FENCE (2 C-222)
- GUARDRAIL, SEE SHEET S-223
- REINFORCED LAWN SURFACING (7 C-220)

CONSTRUCTION NOTES

1. 1' GRAVEL SHOULDER
2. 2' GRAVEL SHOULDER
3. 3' GRAVEL SHOULDER
4. REINSTALL SIGN PER COK STD PLAN CK-R.43
5. INSTALL IRRIGATION SLEEVE PER L-210A/B, MAX SPACING 200'
6. LIGHT FOUNDATION/JUNCTION BOX, SEE ELECTRICAL
7. CRITICAL AREA SIGN ON SPLIT RAIL FENCE (1/2 C-222)

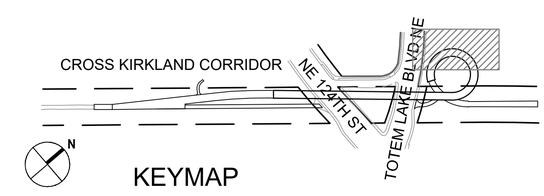

KEYMAP

CITY OF KIRKLAND
DEPARTMENT OF PUBLIC WORKS
123 FIFTH AVENUE KIRKLAND, WA 98033
(425) 587-3800 www.kirklandwa.gov

NO.	DATE	BY	APPR.	REVISION
0	2019/12/06	NP	DR	ISSUE FOR BID

NATHAN ALAN POLANSKI, STATE OF WASHINGTON, REGISTERED PROFESSIONAL ENGINEER, 45080, 12-5-19

COWI MIG SvR

DR 2019/12/06 DESIGNED BY: DATE
JA 2019/12/06 DRAWN BY: DATE
KG 2019/12/06 CHECKED BY: DATE

CITY OF KIRKLAND
TOTEM LAKE PEDESTRIAN BRIDGE

GRADING AND DRAINAGE PLAN 6

SHEET: TLC – C –196
SCALE: AS SHOWN
FILENAME: TLPB_190_GRADE-DRAIN.dwg

File: G:\15c\15094c TLPB\Current\TLPB_190_GRADE-DRAIN.dwg Save Date: Dec 06, 2019 9:54 AM Saved By: JENNIFERA

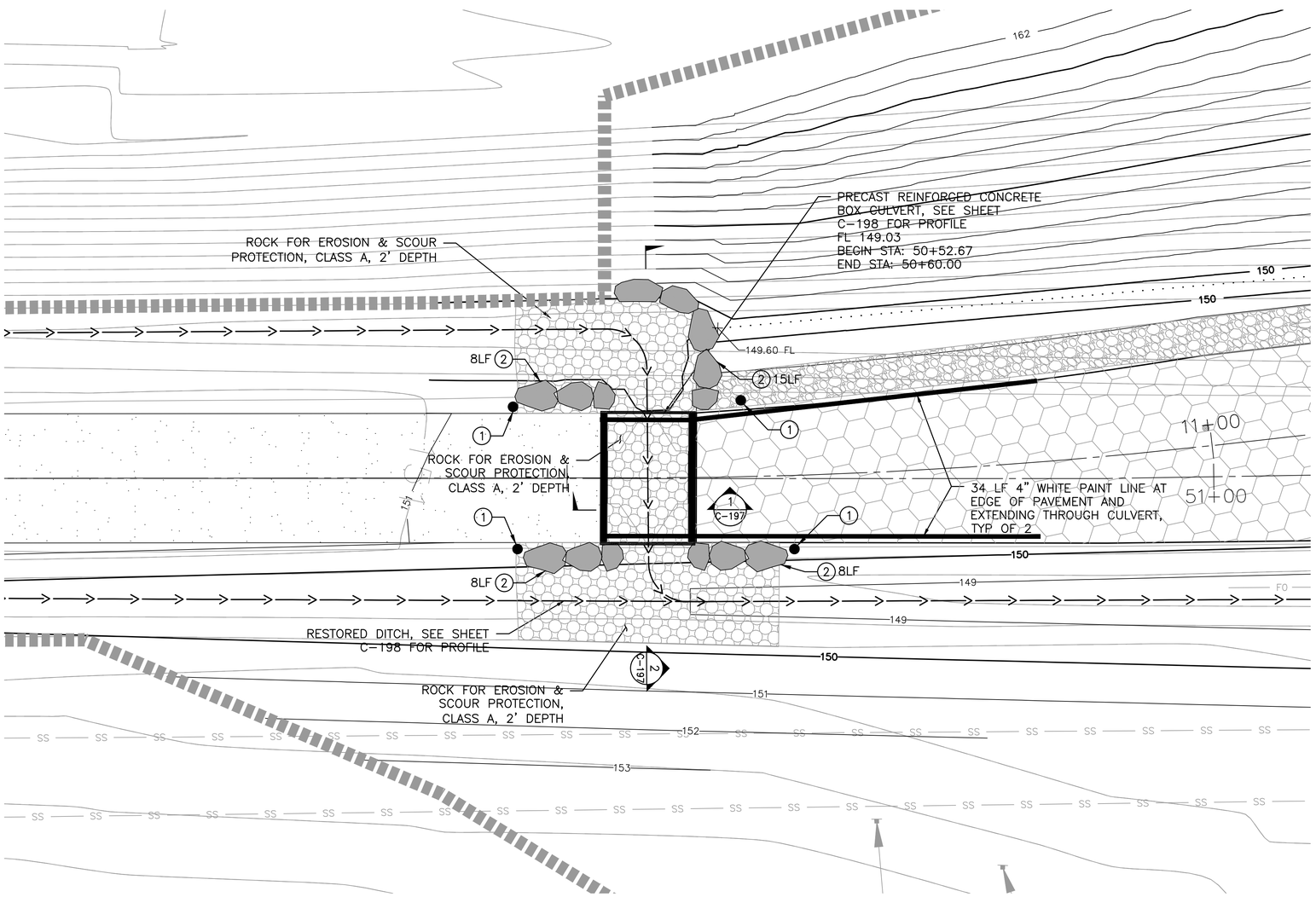

CONSTRUCTION NOTES

1. INSTALL FLEXIBLE GUIDE POST WITH TYPE WW REFLECTIVE SHEETING PER WSDOT STANDARD PLAN M-40.10-03. TOP OF POST SET 36" ABOVE TRAIL GRADE. LOCATE POST AT EDGE OF TRAIL 2' IN ADVANCE OF ROCKERY WALL
2. INSTALL ROCKERY WALL PER COK PLAN NO CK-R.52

NTS
Culvert Connection Enlargement 3

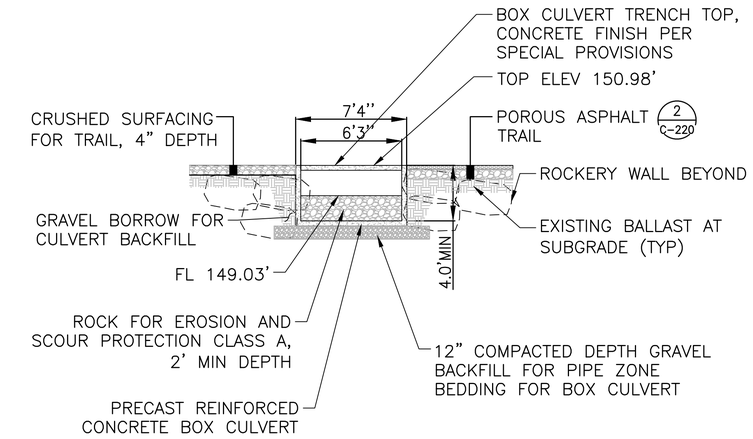

NTS
Box Culvert Section 1

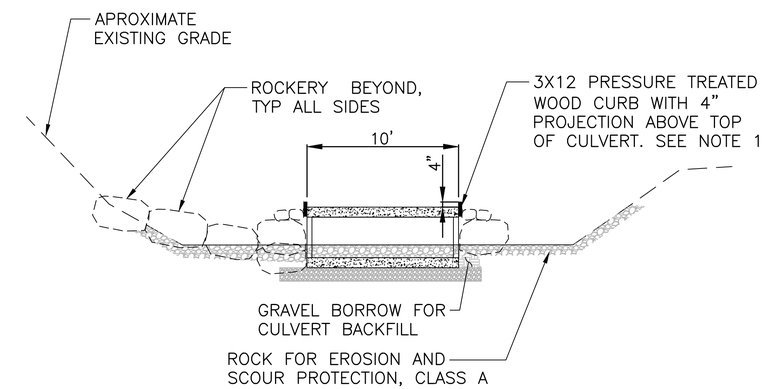

NOTE:

1. ATTACH PRESSURE TREATED WOOD CURB WITH 15-$\frac{1}{4}$" DIAMETER COATED CONCRETE SCREWS WITH STAGGERED 11"X3" PATTERN

NTS
Box Culvert Section 2

CITY OF KIRKLAND
DEPARTMENT OF PUBLIC WORKS
123 FIFTH AVENUE KIRKLAND, WA 98033
(425) 587-3800 www.kirklandwa.gov

NO.	DATE	BY	APPR.	REVISION
0	2019/12/06	NP	DR	ISSUE FOR BID

NATHAN ALAN POLANSKI — STATE OF WASHINGTON — REGISTERED PROFESSIONAL ENGINEER — 12-5-19

COWI MIG SvR

DR DESIGNED BY:	2019/12/06 DATE
JA DRAWN BY:	2019/12/06 DATE
KG CHECKED BY:	2019/12/06 DATE

CITY OF KIRKLAND
TOTEM LAKE PEDESTRIAN BRIDGE

WEST DITCH TO EAST DITCH CULVERT CONNECTION

SHEET: TLC – C –197
SCALE: AS SHOWN
FILENAME: TLPB_190_GRADE-DRAIN.dwg

File: G:\15c\15094c TLPB\Current\TLPB_190_GRADE-DRAIN.dwg Save Date: Dec 06, 2019 9:54 AM Saved By: JENNIFERA

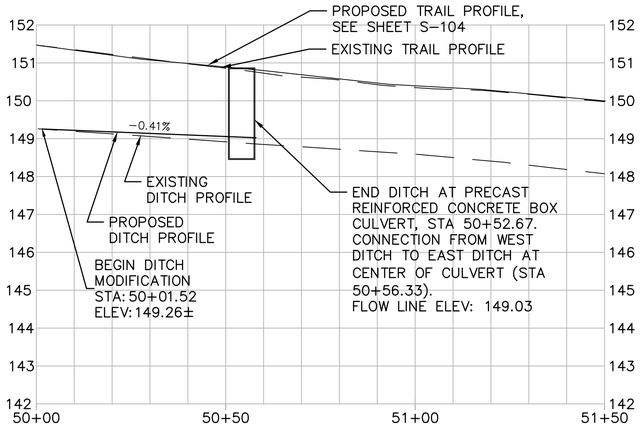

WEST DITCH PROFILE

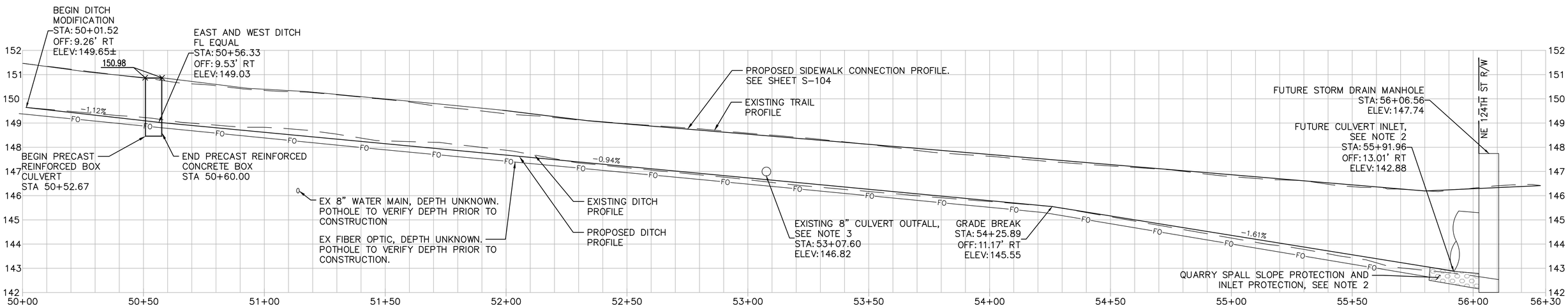

EAST DITCH AND SIDEWALK CONNECTION PROFILE

NOTES

1. SEE GRADING AND DRAINAGE PLANS, SHEETS C-191 TO C-197, FOR ADDITIONAL INFORMATION.
2. END RESTORED DITCH AT CULVERT INLET. INSTALL QUARRY SPALL SLOPE PROTECTION AND INLET PROTECTION PER APPROVED RECORD DRAWINGS
3. INSTALL 4'L x 8'W x 2'D PAD OF ROCK FOR EROSION AND SCOUR PROTECTION, CLASS A AT CULVERT OUTFALL

CITY OF KIRKLAND
DEPARTMENT OF PUBLIC WORKS
123 FIFTH AVENUE KIRKLAND, WA 98033
(425) 587-3800 www.kirklandwa.gov

NO.	DATE	BY	APPR.	REVISION
0	2019/12/06	NP	DR	ISSUE FOR BID

NATHAN ALAN POLANSKI — STATE OF WASHINGTON — REGISTERED PROFESSIONAL ENGINEER — 12-5-19

COWI
MIG | SvR

DR — DESIGNED BY:	2019/12/06 — DATE
JA — DRAWN BY:	2019/12/06 — DATE
KG — CHECKED BY:	2019/12/06 — DATE

CITY OF KIRKLAND
TOTEM LAKE PEDESTRIAN BRIDGE

PROFILE–SIDEWALK CONNECTION AND RESTORED EAST DITCH

SHEET: TLC – C –198
SCALE: AS SHOWN
FILENAME: TLPB_190_GRADE–DRAIN.dwg

File: G:\15c\15094c TLPB\Current\TLPB_190_GRADE-DRAIN.dwg Save Date: Dec 06, 2019 9:54 AM Saved By: JENNIFERA

RESTORATION PLANT SCHEDULE

DT=DROUGHT TOLERANT, NWN=NORTHWEST NATIVE, EG=EVERGREEN, S=FULL SUN TOLERANT, PS=PART SHADE TOLERANT

RESTORATION ENHANCEMENT

DT	NWN	EG	BOTANICAL NAME	COMMON NAME	SIZE / SPACING	QTY.	DETAIL	EXPOSURE	NOTES
WETLAND RESTORATION / ENHANCEMENT SHRUB MIX									
	NWN		LONICERA INVOLUCRATA	BLACK TWINBERRY	40 CU. IN. PLUG/ 5' O.C.	255	WSDOT STANDARD PLAN H-10.10-00	S, PS	INTERMIX SPECIES IN GROUPS OF 3-5 PLANTS EACH
	NWN		RUBUS SPECTABILIS	SALMONBERRY	40 CU. IN. PLUG/ 5' O.C.	255	WSDOT STANDARD PLAN H-10.10-00	S, PS	
	NWN		SYMPHORICARPOS ALBUS	SNOWBERRY	LIVE STAKES/ 5' O.C.	255	WSDOT STANDARD PLAN H-10.10-00	S, PS	
WETLAND RESTORATION GROUNDCOVER MIX									
	NWN	EG	ATHYRIUM FILIX-FEMINA	LADY FERN	4" POTS/ 1' O.C.	1670	WSDOT STANDARD PLAN H-10.10-00	PS	INTERMIX SPECIES IN GROUPS OF 3-5 PLANTS EACH
	NWN	EG	CAREX OBNUPTA	SLOUGH SEDGE	4" POTS/ 1' O.C.	1670	WSDOT STANDARD PLAN H-10.10-00	S, PS	
BUFFER RESTORATION / ENHANCEMENT SHRUB MIX									
	NWN		AMELANCHIER ALNIFOLIA	SERVICEBERRY	4" POTS/ 5' O.C.	511	WSDOT STANDARD PLAN H-10.10-00	S, PS	INTERMIX SPECIES IN GROUPS OF 3-5 PLANTS EACH
	NWN		LONICERA INVOLUCRATA	BLACK TWINBERRY	4" POTS/ 5' O.C.	511	WSDOT STANDARD PLAN H-10.10-00	S, PS	
	NWN		PHILADELPHUS LEWISII	MOCK ORANGE	4" POTS/ 5' O.C.	511	WSDOT STANDARD PLAN H-10.10-00	S, PS	
BUFFER RESTORATION GROUNDCOVER MIX									
	NWN		FRAGARIA CHILOENSIS	BEACH STRAWBERRY	4" POTS/ 2' O.C.	1385	WSDOT STANDARD PLAN H-10.10-00	S, PS	INTERMIX EQUALLY
	NWN	EG	POLYSTICHUM MUNITUM	SWORD FERN	2 GAL./ 3' O.C.	615	WSDOT STANDARD PLAN H-10.10-00	PS	
TREES									
	NWN		ACER CIRCINATUM	VINE MAPLE	5 GAL.	21	WSDOT STANDARD PLAN H-10.10-00		
	NWN		ALNUS RUBRA	RED ALDER	BARE ROOT 12-18"	47	WSDOT STANDARD PLAN H-10.10-00	S, PS	
					5 GAL.	15			
	NWN		CALOCEDRUS DECURRENS	INCENSE CEDAR	BARE ROOT 12-18"	40	WSDOT STANDARD PLAN H-10.15-00		
	NWN		SALIX LUCIDA	PACIFIC WILLOW	LIVE STAKES/ AS SHOWN	32	WSDOT STANDARD PLAN H-10.15-00	S	
	NWN	EG	THUJA PLICATA	WESTERN RED CEDAR	BARE ROOT 12-18"	13	WSDOT STANDARD PLAN H-10.10-00	S, PS	
					6' HT	15			

CORRIDOR PLANT SCHEDULE

DRAINAGE DITCH SEEDING MIX					SQUARE YARDS	398		
INFILTRATION AND DRAINAGE DITCH POND MIX : ZONE 1								
	NWN		CAREX STIPATA	SAWBREAK SEDGE	10 CU. IN. PLUGS/9" OC.	570	WSDOT STANDARD PLAN H-10.10-00	S, PS	INTERMIX SPECIES IN GROUPS OF 3-5 PLANTS EACH
DT	NWN		JUNCUS ENSIFOLIUS	DAGGERLEAF RUSH	10 CU. IN. PLUGS/9" OC.	570	WSDOT STANDARD PLAN H-10.10-00	S, PS	
	NWN		SCIRPUS MICROCARPUS	SMALL-FRUITED BALRUSH	10 CU. IN. PLUGS/9" OC.	570	WSDOT STANDARD PLAN H-10.10-00	S, PS	
INFILTRATION POND MIX : ZONE 2								
	NWN		CORNUS SERICEA 'KELSEYII'	KELSEY REDSTEM DOGWOOD	2 GAL./ 24" OC.	70	WSDOT STANDARD PLAN H-10.10-00	S, PS	INTERMIX SPECIES IN GROUPS OF 3-5 PLANTS EACH, PLANT ALL 2 GALLON DOGWOODS IN INFILTRATION POND.
					BARE ROOT 12"-15"/ 24" OC.	140			
DT	NWN		PENSTEMON SERRULATUS	CASCADE BEARD-TONGUE	4" POTS/ 24" O.C.	210	WSDOT STANDARD PLAN H-10.10-00	S, PS	
INFILTRATION POND MIX : ZONE 3								
DT	NWN		ACHILLEA MILLEFOLIUM	COMMON YARROW	4" POTS/ 18" O.C.	195	WSDOT STANDARD PLAN H-10.10-00	S, PS	INTERMIX SPECIES IN GROUPS OF 3-5 PLANTS EACH
DT	NWN	EG	MAHONIA REPENS	CREEPING OREGON HOLLY-GRAPE	4" POTS/ 18" O.C.	195	WSDOT STANDARD PLAN H-10.10-00	S, PS	
DT	NWN		PENSTEMON SERRULATUS	CASCADE BEARD-TONGUE	4" POTS/ 18" O.C.	195	WSDOT STANDARD PLAN H-10.10-00	S, PS	
SEEDED LAWN					SQUARE YARDS	777		
SOD INSTALLATION					SQUARE YARDS	665		
TRAIL EDGE SEDUM MIX								
DT	NWN	EG	SEDUM DIVERGENS	STONECROP	4" POTS/ 12" O.C.	1490	WSDOT STANDARD PLAN H-10.10-00	S, PS	INTERMIX EQUALLY
DT	NWN	EG	SEDUM OREGANUM	OREGON STONECROP	4" POTS/ 12" O.C.	1490	WSDOT STANDARD PLAN H-10.10-00	S	
	NWN		SYMPHORICARPOS ALBUS	SNOWBERRY	2 GAL.	14	WSDOT STANDARD PLAN H-10.10-00	S, PS	
TREES								
	NWN		ACER CIRCINATUM	VINE MAPLE	2 GAL	11	WSDOT STANDARD PLAN H-10.10-00		
	NWN		CALOCEDRUS DECURRENS	INCENSE CEDAR	2 GAL	6	WSDOT STANDARD PLAN H-10.10-00		
ARBORIST WOOD CHIP MULCH					SQUARE FEET	810		

NOTE

1. ALL PLANTINGS, OTHER THAN LAWNS, ARE BID AS PSIPE BASED UPON SIZES.

811 Know what's below. Call before you dig.

CITY OF KIRKLAND
DEPARTMENT OF PUBLIC WORKS
123 FIFTH AVENUE KIRKLAND, WA 98033
(425) 587-3800 www.kirklandwa.gov

NO.	DATE	BY	APPR.	REVISION
0	2019/12/06	DD	BM	ISSUE FOR BID

STATE OF WASHINGTON BRADLEY MARK MCKINNEY LANDSCAPE ARCHITECT 12/6/19

COWI MIG SvR

BM 2019/12/06 DESIGNED BY: DATE
DD 2019/12/06 DRAWN BY: DATE
MRS 2019/12/06 CHECKED BY: DATE

CITY OF KIRKLAND
TOTEM LAKE PEDESTRIAN BRIDGE

PLANT SCHEDULE

SHEET: TLC – L –200
SCALE:
FILENAME: TLPB_200_LANDSCAPE.dwg

File: G:\15c\15094c TLPB\Current\TLPB_200_LANDSCAPE.dwg Save Date: Dec 06, 2019 8:55 AM Saved By: JENNIFERA

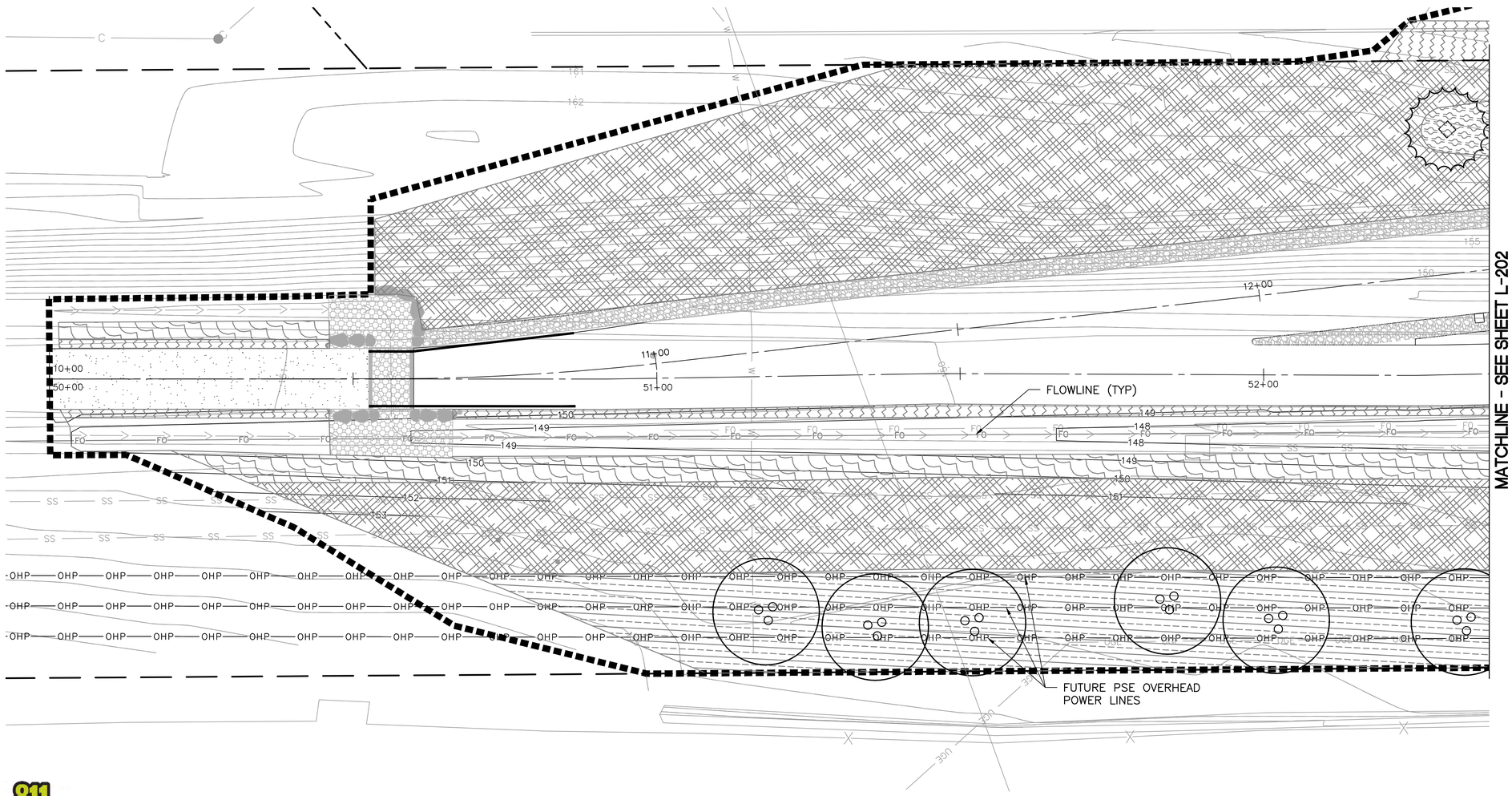

LEGEND

- PROPERTY LINE
- PROJECT LIMITS
- BRIDGE AND RAILING OVERHEAD, TYP
- RESTORED/ REPLACED SNAG
- MSE WALL, SEE SHEET L–208 FOR MSE WALL PLANTING LAYOUT
- ARBORIST WOOD CHIP MULCH
- ROCK FOR EROSION & SCOUR PROTECTION
- GRAVEL SHOULDER 2 / C–221

NOTES

1. INVASIVE PLANTS TO BE REMOVED TWICE FROM THE ENTIRE PROJECT SITE THROUGHOUT THE COURSE OF THE PROJECT:
   REMOVAL #1 SHALL OCCUR AT ONSET OF CONSTRUCTION, AND REMOVAL #2 PRIOR TO INSTALLING NEW PROJECT PLANTING.
2. DISPERSE SALVAGED LARGE WOODY DEBRIS AND INSTALL SALVAGED SNAGS WITHIN THE WETLAND AND WETLAND BUFFER PRIOR TO PLANT INSTALLATION. COORDINATE LOCATIONS WITH THE ENGINEER.
3. CONTRACTOR SHALL DESIGN AND PROVIDE IRRIGATION TO THESE AREAS. SEE SPECS. AND SHEETS L–210A AND L–210B FOR DESIGN BUILD IRRIGATION NOTES.
4. CONTRACTOR SHALL PROTECT POROUS ASPHALT PAVEMENT FROM DEBRIS AND SEDIMENT. SEE SPECIFICATIONS.

CORRIDOR UNDERSTORY PLANT SCHEDULE

SEE SHEET L-200 FOR THE PLANTING LEGEND

- WETLAND RESTORATION/ENHANCEMENT SHRUB MIX
- WETLAND RESTORATION GROUND COVER MIX
- BUFFER RESTORATION/ENHANCEMENT SHRUB MIX (SEE NOTE 3)
- BUFFER RESTORATION GROUND COVER MIX (SEE NOTE 3)
- DRAINAGE DITCH SEEDING MIX (SEE NOTE 3)
- INFILTRATION POND AND DRAINAGE DITCH MIX ZONE 1 (SEE NOTE 3)
- INFILTRATION POND MIX ZONE 2 (SEE NOTE 3)
- INFILTRATION MIX ZONE 3 (SEE NOTE 3)
- HYDROSEED LAWN (SEE NOTE 3)
- SOD LAWN (SEE NOTE 3)
- TRAIL EDGE SEDUM MIX (SEE NOTE 3)

N

10' 5' 0 10' 20'
Scale In Feet

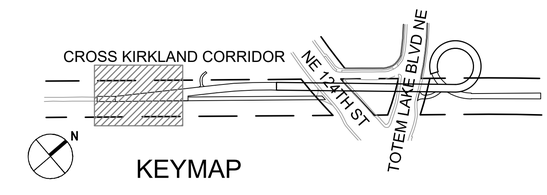

KEYMAP

Know what's below. Call before you dig.

CITY OF KIRKLAND
DEPARTMENT OF PUBLIC WORKS
123 FIFTH AVENUE KIRKLAND, WA 98033
(425) 587-3800 www.kirklandwa.gov

NO.	DATE	BY	APPR.	REVISION
0	2019/12/06	DD	BM	ISSUE FOR BID

STATE OF WASHINGTON BRIAN MARTIN LANDSCAPE ARCHITECT 12/6/19

COWI MIG SvR

BM	2019/12/06	DESIGNED BY: DATE
DD	2019/12/06	DRAWN BY: DATE
MRS	2019/12/06	CHECKED BY: DATE

CITY OF KIRKLAND
TOTEM LAKE PEDESTRIAN BRIDGE

CORRIDOR RESTORATION 1

SHEET: TLC – L –201
SCALE: AS SHOWN
FILENAME: TLPB_200_LANDSCAPE.dwg

File: G:\15c\15094c TLPB\Current\TLPB_200_LANDSCAPE.dwg Save Date: Dec 06, 2019 8:55 AM Saved By: JENNIFERA

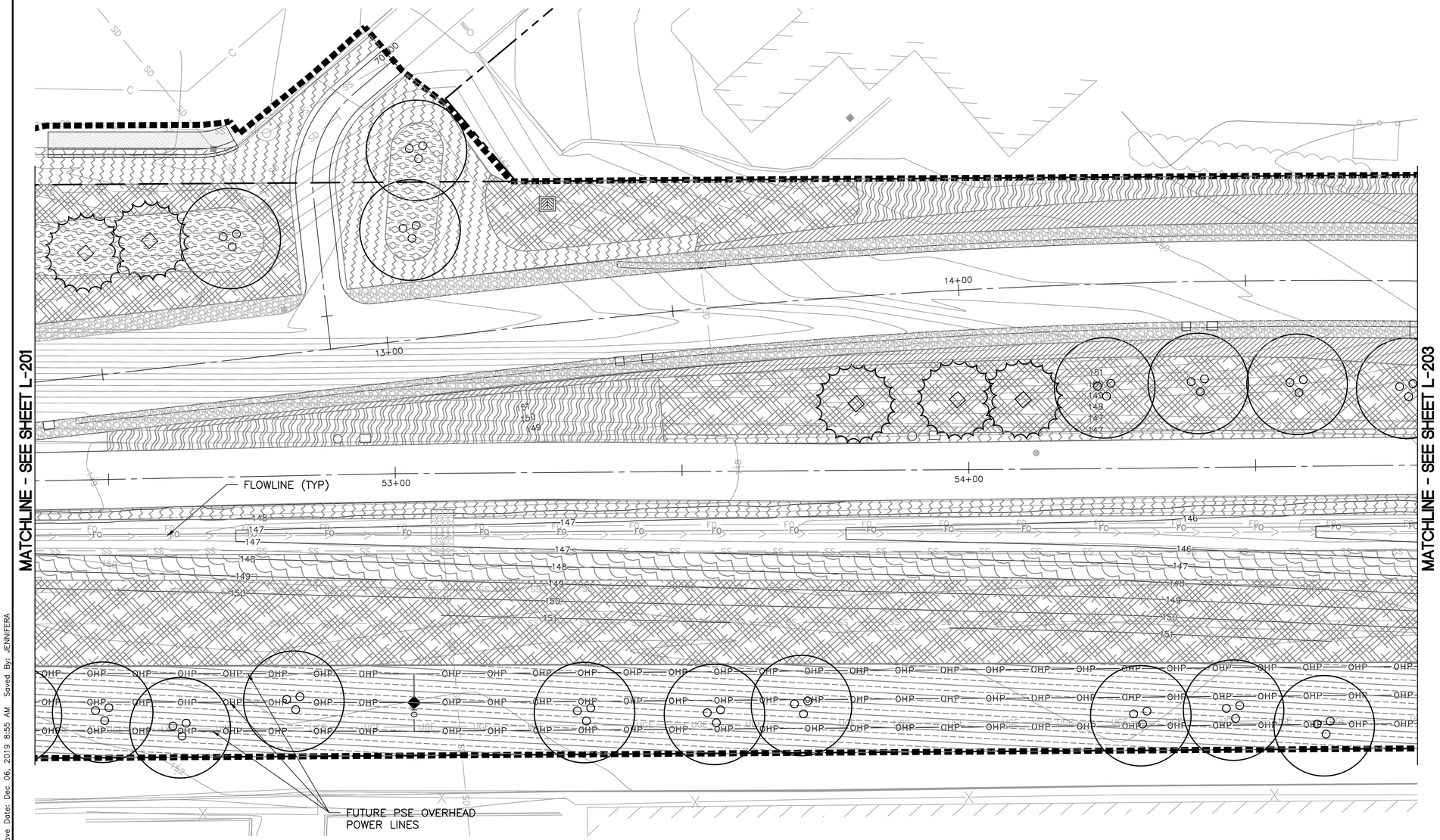

LEGEND

- PROPERTY LINE
- PROJECT LIMITS
- BRIDGE AND RAILING OVERHEAD, TYP
- RESTORED/ REPLACED SNAG
- MSE WALL, SEE SHEET L–208 FOR MSE WALL PLANTING LAYOUT
- ARBORIST WOOD CHIP MULCH
- ROCK FOR EROSION & SCOUR PROTECTION
- GRAVEL SHOULDER (2 / C–221)

NOTES

1. INVASIVE PLANTS TO BE REMOVED TWICE FROM THE ENTIRE PROJECT SITE THROUGHOUT THE COURSE OF THE PROJECT:
   REMOVAL #1 SHALL OCCUR AT ONSET OF CONSTRUCTION, AND REMOVAL #2 PRIOR TO INSTALLING NEW PROJECT PLANTING.
2. DISPERSE SALVAGED LARGE WOODY DEBRIS AND INSTALL SALVAGED SNAGS WITHIN THE WETLAND AND WETLAND BUFFER PRIOR TO PLANT INSTALLATION. COORDINATE LOCATIONS WITH THE ENGINEER.
3. CONTRACTOR SHALL DESIGN AND PROVIDE IRRIGATION TO THESE AREAS. SEE SPECS. AND SHEETS L–210A AND L–210B FOR DESIGN BUILD IRRIGATION NOTES.
4. CONTRACTOR SHALL PROTECT POROUS ASPHALT PAVEMENT FROM DEBRIS AND SEDIMENT. SEE SPECIFICATIONS.

CORRIDOR UNDERSTORY PLANT SCHEDULE

SEE SHEET L-200 FOR THE PLANTING LEGEND

- WETLAND RESTORATION/ENHANCEMENT SHRUB MIX
- WETLAND RESTORATION GROUND COVER MIX
- BUFFER RESTORATION/ENHANCEMENT SHRUB MIX (SEE NOTE 3)
- BUFFER RESTORATION GROUND COVER MIX (SEE NOTE 3)
- DRAINAGE DITCH SEEDING MIX (SEE NOTE 3)
- INFILTRATION POND AND DRAINAGE DITCH MIX ZONE 1 (SEE NOTE 3)
- INFILTRATION POND MIX ZONE 2 (SEE NOTE 3)
- INFILTRATION MIX ZONE 3 (SEE NOTE 3)
- HYDROSEED LAWN (SEE NOTE 3)
- SOD LAWN (SEE NOTE 3)
- TRAIL EDGE SEDUM MIX (SEE NOTE 3)

811 Know what's below. Call before you dig.

N

10' 5' 0 10' 20'
Scale In Feet

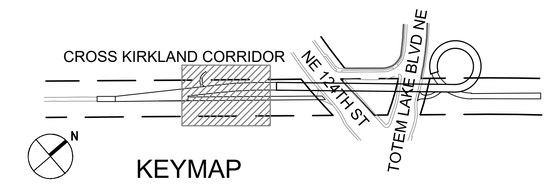

KEYMAP

CITY OF KIRKLAND
DEPARTMENT OF PUBLIC WORKS
123 FIFTH AVENUE KIRKLAND, WA 98033
(425) 587-3800 www.kirklandwa.gov

NO.	DATE	BY	APPR.	REVISION
0	2019/12/06	DD	BM	ISSUE FOR BID

STATE OF WASHINGTON BRIAN MARTIN LANDSCAPE ARCHITECT 12/6/19 EXP. 7/31/2021

COWI
MIG | SvR

BM	2019/12/06	DESIGNED BY: DATE
DD	2019/12/06	DRAWN BY: DATE
MRS	2019/12/06	CHECKED BY: DATE

CITY OF KIRKLAND
TOTEM LAKE PEDESTRIAN BRIDGE

CORRIDOR RESTORATION 2

SHEET: TLC – L –202
SCALE: AS SHOWN
FILENAME: TLPB_200_LANDSCAPE.dwg

File: G:\15c\15094c TLPB\Current\TLPB_200_LANDSCAPE.dwg Save Date: Dec 06, 2019 8:55 AM Saved By: JENNIFERA

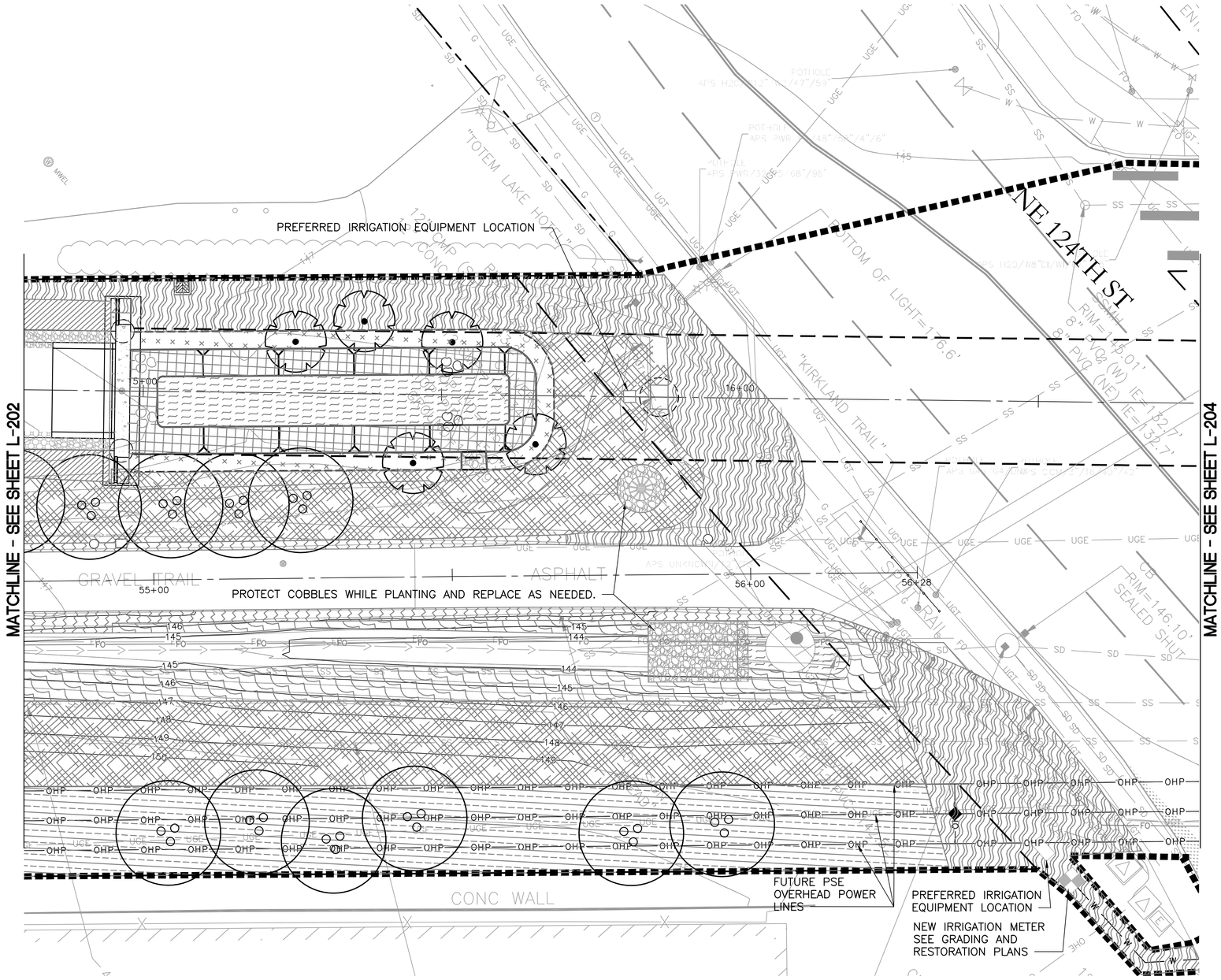

LEGEND

- PROPERTY LINE
- PROJECT LIMITS
- BRIDGE AND RAILING OVERHEAD, TYP
- RESTORED/ REPLACED SNAG
- MSE WALL, SEE SHEET L-208 FOR MSE WALL PLANTING LAYOUT
- ARBORIST WOOD CHIP MULCH
- ROCK FOR EROSION & SCOUR PROTECTION
- GRAVEL SHOULDER (2 / C-221)

NOTES

1. INVASIVE PLANTS TO BE REMOVED TWICE FROM THE ENTIRE PROJECT SITE THROUGHOUT THE COURSE OF THE PROJECT:
   REMOVAL #1 SHALL OCCUR AT ONSET OF CONSTRUCTION, AND REMOVAL #2 PRIOR TO INSTALLING NEW PROJECT PLANTING.
2. DISPERSE SALVAGED LARGE WOODY DEBRIS AND INSTALL SALVAGED SNAGS WITHIN THE WETLAND AND WETLAND BUFFER PRIOR TO PLANT INSTALLATION. COORDINATE LOCATIONS WITH THE ENGINEER.
3. CONTRACTOR SHALL DESIGN AND PROVIDE IRRIGATION TO THESE AREAS. SEE SPECS. AND SHEETS L-210A AND L-210B FOR DESIGN BUILD IRRIGATION NOTES.
4. CONTRACTOR SHALL PROTECT POROUS ASPHALT PAVEMENT FROM DEBRIS AND SEDIMENT. SEE SPECIFICATIONS.

CORRIDOR UNDERSTORY PLANT SCHEDULE

SEE SHEET L-200 FOR THE PLANTING LEGEND

- WETLAND RESTORATION/ENHANCEMENT SHRUB MIX
- WETLAND RESTORATION GROUND COVER MIX
- BUFFER RESTORATION/ENHANCEMENT SHRUB MIX (SEE NOTE 3)
- BUFFER RESTORATION GROUND COVER MIX (SEE NOTE 3)
- DRAINAGE DITCH SEEDING MIX (SEE NOTE 3)
- INFILTRATION POND AND DRAINAGE DITCH MIX ZONE 1 (SEE NOTE 3)
- INFILTRATION POND MIX ZONE 2 (SEE NOTE 3)
- INFILTRATION MIX ZONE 3 (SEE NOTE 3)
- HYDROSEED LAWN (SEE NOTE 3)
- SOD LAWN (SEE NOTE 3)
- TRAIL EDGE SEDUM MIX (SEE NOTE 3)

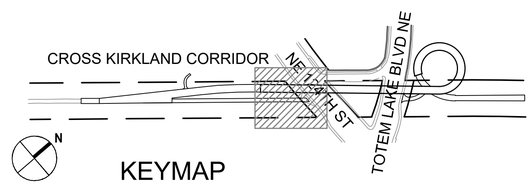

KEYMAP

N

10' 5' 0 10' 20'
Scale In Feet

Know what's below. Call before you dig.

CITY OF KIRKLAND
DEPARTMENT OF PUBLIC WORKS
123 FIFTH AVENUE KIRKLAND, WA 98033
(425) 587-3800 www.kirklandwa.gov

NO.	DATE	BY	APPR.	REVISION
0	2019/12/06	DD	BM	ISSUE FOR BID

STATE OF WASHINGTON BRIAN MARTIN 12/6/19 LANDSCAPE ARCHITECT

COWI MIG SvR

BM DESIGNED BY:	2019/12/06 DATE
DD DRAWN BY:	2019/12/06 DATE
MRS CHECKED BY:	2019/12/06 DATE

CITY OF KIRKLAND
TOTEM LAKE PEDESTRIAN BRIDGE

CORRIDOR RESTORATION 3

SHEET: TLC – L –203
SCALE: AS SHOWN
FILENAME: TLPB_200_LANDSCAPE.dwg

File: G:\15c\15094c TLPB\Current\TLPB_200_LANDSCAPE.dwg Save Date: Dec 06, 2019 8:55 AM Saved By: JENNIFERA

SURVEY NOTE:

1) EXISTING CONDITIONS SHOWN ALONG TOTEM LAKE BLVD NE (CURB ALIGNMENT, SIDEWALK, STRIPING AND DRAINAGE STRUCTURES) ARE BASED ON PROPOSED IMPROVEMENTS SHOWN IN THE BID SET FOR THE CITY'S TOTEM LAKE GATEWAY PROJECT (CIP NO. STC006050).

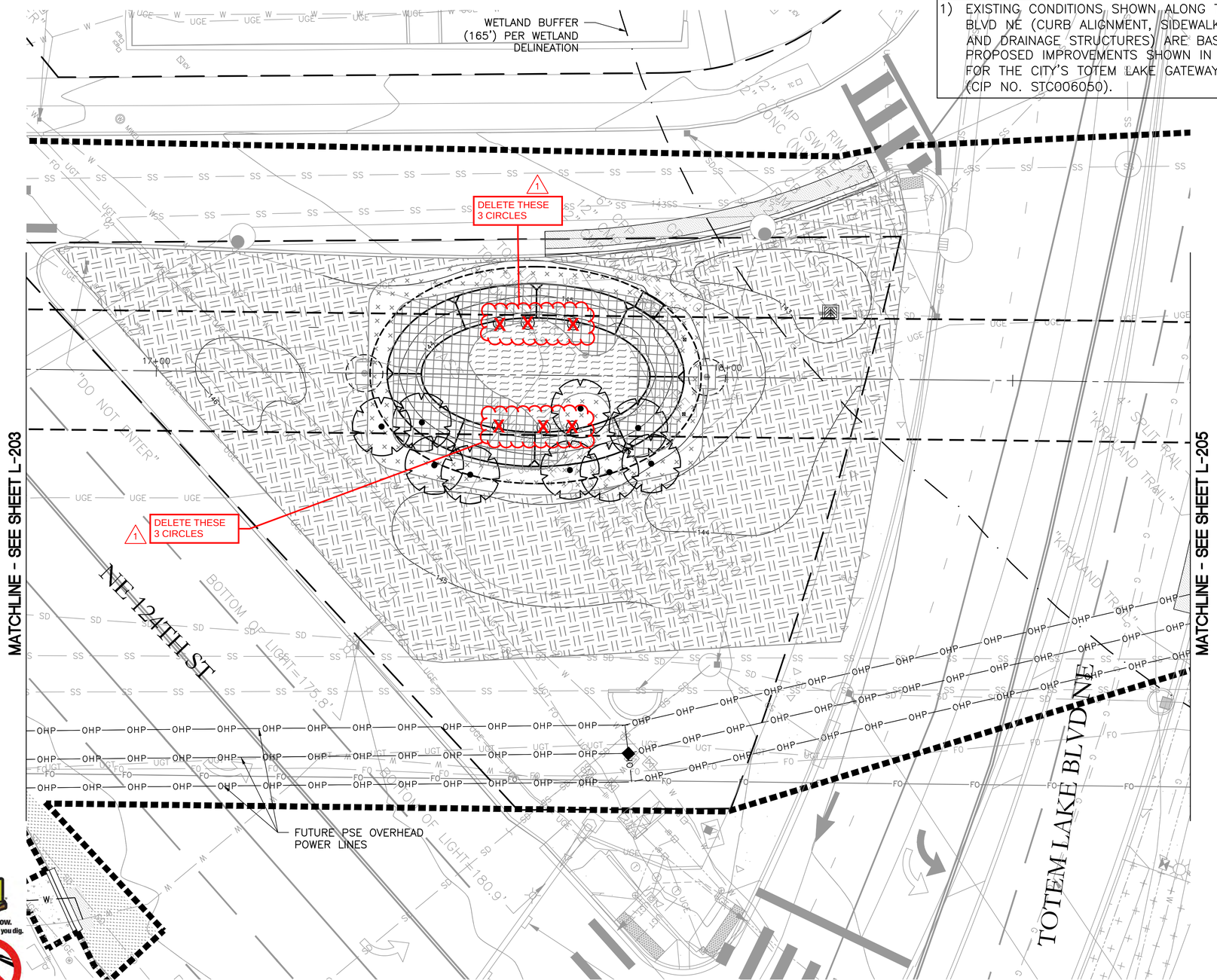

LEGEND

- PROPERTY LINE
- PROJECT LIMITS
- BRIDGE AND RAILING OVERHEAD, TYP
- RESTORED/ REPLACED SNAG
- MSE WALL, SEE SHEET L-208 FOR MSE WALL PLANTING LAYOUT
- ARBORIST WOOD CHIP MULCH
- ROCK FOR EROSION & SCOUR PROTECTION
- GRAVEL SHOULDER (2 / C-221)

NOTES

1. INVASIVE PLANTS TO BE REMOVED TWICE FROM THE ENTIRE PROJECT SITE THROUGHOUT THE COURSE OF THE PROJECT:
   REMOVAL #1 SHALL OCCUR AT ONSET OF CONSTRUCTION, AND REMOVAL #2 PRIOR TO INSTALLING NEW PROJECT PLANTING.
2. DISPERSE SALVAGED LARGE WOODY DEBRIS AND INSTALL SALVAGED SNAGS WITHIN THE WETLAND AND WETLAND BUFFER PRIOR TO PLANT INSTALLATION. COORDINATE LOCATIONS WITH THE ENGINEER.
3. CONTRACTOR SHALL DESIGN AND PROVIDE IRRIGATION TO THESE AREAS. SEE SPECS. AND SHEETS L-210A AND L-210B FOR DESIGN BUILD IRRIGATION NOTES.
4. CONTRACTOR SHALL PROTECT POROUS ASPHALT PAVEMENT FROM DEBRIS AND SEDIMENT. SEE SPECIFICATIONS.

CORRIDOR UNDERSTORY PLANT SCHEDULE

SEE SHEET L-200 FOR THE PLANTING LEGEND

- WETLAND RESTORATION/ENHANCEMENT SHRUB MIX
- WETLAND RESTORATION GROUND COVER MIX
- BUFFER RESTORATION/ENHANCEMENT SHRUB MIX (SEE NOTE 3)
- BUFFER RESTORATION GROUND COVER MIX (SEE NOTE 3)
- DRAINAGE DITCH SEEDING MIX (SEE NOTE 3)
- INFILTRATION POND AND DRAINAGE DITCH MIX ZONE 1 (SEE NOTE 3)
- INFILTRATION POND MIX ZONE 2 (SEE NOTE 3)
- INFILTRATION MIX ZONE 3 (SEE NOTE 3)
- HYDROSEED LAWN (SEE NOTE 3)
- SOD LAWN (SEE NOTE 3)
- TRAIL EDGE SEDUM MIX (SEE NOTE 3)

N

10' 5' 0 10' 20'
Scale In Feet

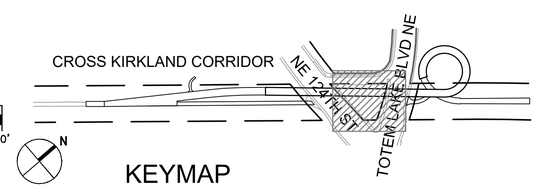

KEYMAP

811 Know what's below. Call before you dig.

File: G:\15c\15094c TLPB\Current\TLPB_200_LANDSCAPE.dwg Save Date: Dec 06, 2019 8:55 AM Saved By: JENNIFERA

CITY OF KIRKLAND
DEPARTMENT OF PUBLIC WORKS
123 FIFTH AVENUE KIRKLAND, WA 98033
(425) 587-3800 www.kirklandwa.gov

NO.	DATE	BY	APPR.	REVISION
1	2020/03/09	DD	BM	ADDENDUM 3
0	2019/12/06	DD	BM	ISSUE FOR BID

STATE OF WASHINGTON BRIAN MCMANUS LANDSCAPE ARCHITECT 12/6/19 EXP 7/18/2021

COWI MIG SvR

BM DESIGNED BY:	2019/12/06 DATE
DD DRAWN BY:	2019/12/06 DATE
MRS CHECKED BY:	2019/12/06 DATE

CITY OF KIRKLAND
TOTEM LAKE PEDESTRIAN BRIDGE

CORRIDOR RESTORATION 4

SHEET: TLC – L –204
SCALE: AS SHOWN
FILENAME: TLPB_200_LANDSCAPE.dwg

NOTES

1. INVASIVE PLANTS TO BE REMOVED TWICE FROM THE ENTIRE PROJECT SITE THROUGHOUT THE COURSE OF THE PROJECT:
   REMOVAL #1 SHALL OCCUR AT ONSET OF CONSTRUCTION, AND REMOVAL #2 PRIOR TO INSTALLING NEW PROJECT PLANTING.
2. DISPERSE SALVAGED LARGE WOODY DEBRIS AND INSTALL SALVAGED SNAGS WITHIN THE WETLAND AND WETLAND BUFFER PRIOR TO PLANT INSTALLATION. COORDINATE LOCATIONS WITH THE ENGINEER.
3. CONTRACTOR SHALL DESIGN AND PROVIDE IRRIGATION TO THESE AREAS. SEE SPECS. AND SHEETS L-210A AND L-210B FOR DESIGN BUILD IRRIGATION NOTES.
4. CONTRACTOR SHALL PROTECT POROUS ASPHALT PAVEMENT FROM DEBRIS AND SEDIMENT. SEE SPECIFICATIONS.

SURVEY NOTE:

1) EXISTING CONDITIONS SHOWN ALONG TOTEM LAKE BLVD NE (CURB ALIGNMENT, SIDEWALK, STRIPING AND DRAINAGE STRUCTURES) ARE BASED ON PROPOSED IMPROVEMENTS SHOWN IN THE BID SET FOR THE CITY'S TOTEM LAKE GATEWAY PROJECT (CIP NO. STC006050).

CORRIDOR UNDERSTORY PLANT SCHEDULE

SEE SHEET L-200 FOR THE PLANTING LEGEND

- WETLAND RESTORATION/ENHANCEMENT SHRUB MIX
- WETLAND RESTORATION GROUND COVER MIX
- BUFFER RESTORATION/ENHANCEMENT SHRUB MIX (SEE NOTE 3)
- BUFFER RESTORATION GROUND COVER MIX (SEE NOTE 3)
- DRAINAGE DITCH SEEDING MIX (SEE NOTE 3)
- INFILTRATION POND AND DRAINAGE DITCH MIX ZONE 1 (SEE NOTE 3)
- INFILTRATION POND MIX ZONE 2 (SEE NOTE 3)
- INFILTRATION MIX ZONE 3 (SEE NOTE 3)
- HYDROSEED LAWN (SEE NOTE 3)
- SOD LAWN (SEE NOTE 3)
- TRAIL EDGE SEDUM MIX (SEE NOTE 3)

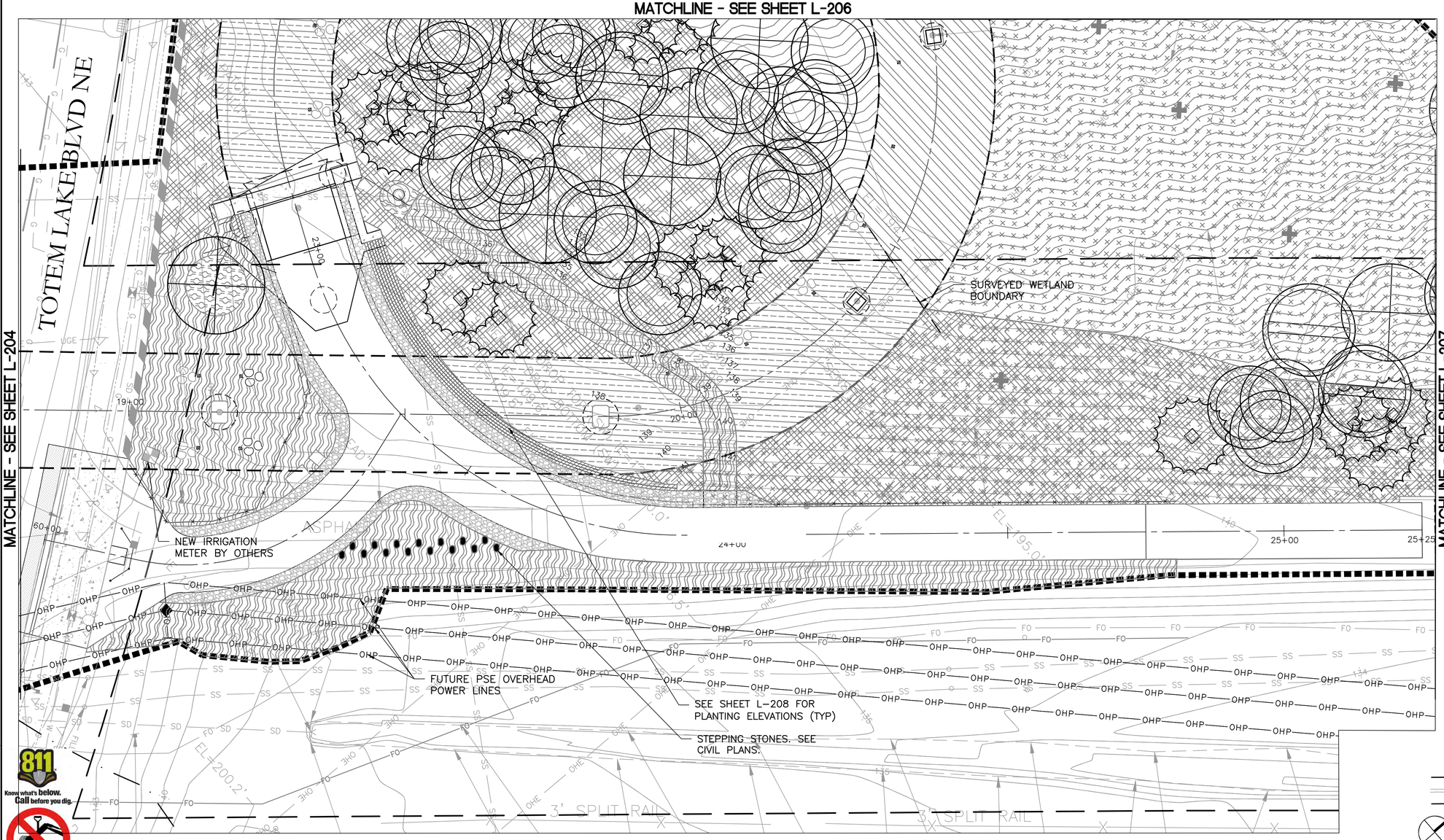

LEGEND

- PROPERTY LINE
- PROJECT LIMITS
- BRIDGE AND RAILING OVERHEAD, TYP
- RESTORED/ REPLACED SNAG
- MSE WALL, SEE SHEET L-208 FOR MSE WALL PLANTING LAYOUT
- ARBORIST WOOD CHIP MULCH
- ROCK FOR EROSION & SCOUR PROTECTION
- GRAVEL SHOULDER (2 / C-221)

N

10' 5' 0 10' 20'

Scale In Feet

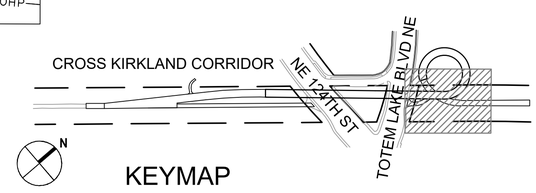

KEYMAP

811 Know what's below. Call before you dig.

File: G:\156c\15094c TLPB\Current\TLPB_200_LANDSCAPE.dwg Save Date: Dec 06, 2019 8:55 AM Saved By: JENNIFERA

CITY OF KIRKLAND WASHINGTON

CITY OF KIRKLAND
DEPARTMENT OF PUBLIC WORKS
123 FIFTH AVENUE KIRKLAND, WA 98033
(425) 587-3800 www.kirklandwa.gov

NO.	DATE	BY	APPR.	REVISION
0	2019/12/06	DD	BM	ISSUE FOR BID

STATE OF WASHINGTON BRADLEY MARK MARTIN LANDSCAPE ARCHITECT 12/6/19

COWI MIG SvR

BM	2019/12/06	DESIGNED BY: DATE
DD	2019/12/06	DRAWN BY: DATE
MRS	2019/12/06	CHECKED BY: DATE

CITY OF KIRKLAND
TOTEM LAKE PEDESTRIAN BRIDGE

CORRIDOR RESTORATION 5

SHEET: TLC – L –205

SCALE: AS SHOWN

FILENAME: TLPB_200_LANDSCAPE.dwg

SURVEY NOTE:

1) EXISTING CONDITIONS SHOWN ALONG TOTEM LAKE BLVD NE (CURB ALIGNMENT, SIDEWALK, STRIPING AND DRAINAGE STRUCTURES) ARE BASED ON PROPOSED IMPROVEMENTS SHOWN IN THE BID SET FOR THE CITY'S TOTEM LAKE GATEWAY PROJECT (CIP NO. STC006050).

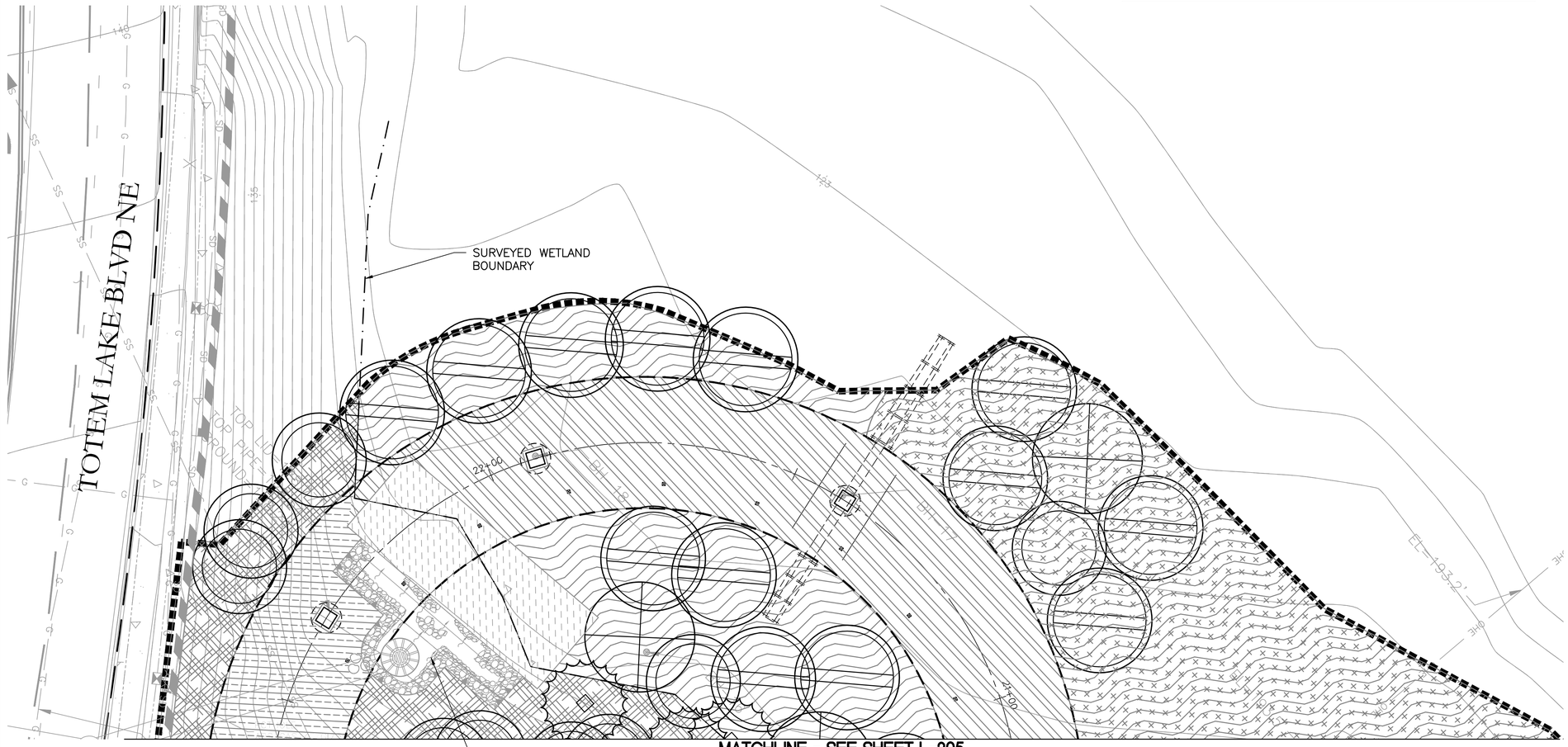

PROTECT COBBLES WHILE PLANTING AND REPLACE AS NEEDED.

LEGEND

- PROPERTY LINE
- PROJECT LIMITS
- BRIDGE AND RAILING OVERHEAD, TYP
- RESTORED/ REPLACED SNAG
- MSE WALL, SEE SHEET L-208 FOR MSE WALL PLANTING LAYOUT
- ARBORIST WOOD CHIP MULCH
- ROCK FOR EROSION & SCOUR PROTECTION
- GRAVEL SHOULDER (2 / L-221)

NOTES

1. INVASIVE PLANTS TO BE REMOVED TWICE FROM THE ENTIRE PROJECT SITE THROUGHOUT THE COURSE OF THE PROJECT:
   REMOVAL #1 SHALL OCCUR AT ONSET OF CONSTRUCTION, AND REMOVAL #2 PRIOR TO INSTALLING NEW PROJECT PLANTING.
2. DISPERSE SALVAGED LARGE WOODY DEBRIS AND INSTALL SALVAGED SNAGS WITHIN THE WETLAND AND WETLAND BUFFER PRIOR TO PLANT INSTALLATION. COORDINATE LOCATIONS WITH THE ENGINEER.
3. CONTRACTOR SHALL DESIGN AND PROVIDE IRRIGATION TO THESE AREAS. SEE SPECS. AND SHEETS L-210A AND L-210B FOR DESIGN BUILD IRRIGATION NOTES.
4. CONTRACTOR SHALL PROTECT POROUS ASPHALT PAVEMENT FROM DEBRIS AND SEDIMENT. SEE SPECIFICATIONS.

CORRIDOR UNDERSTORY PLANT SCHEDULE

SEE SHEET L-200 FOR THE PLANTING LEGEND

- WETLAND RESTORATION/ENHANCEMENT SHRUB MIX
- WETLAND RESTORATION GROUND COVER MIX
- BUFFER RESTORATION/ENHANCEMENT SHRUB MIX (SEE NOTE 3)
- BUFFER RESTORATION GROUND COVER MIX (SEE NOTE 3)
- DRAINAGE DITCH SEEDING MIX (SEE NOTE 3)
- INFILTRATION POND AND DRAINAGE DITCH MIX ZONE 1 (SEE NOTE 3)
- INFILTRATION POND MIX ZONE 2 (SEE NOTE 3)
- INFILTRATION MIX ZONE 3 (SEE NOTE 3)
- HYDROSEED LAWN (SEE NOTE 3)
- SOD LAWN (SEE NOTE 3)
- TRAIL EDGE SEDUM MIX (SEE NOTE 3)

N

10' 5' 0 10' 20'
Scale In Feet

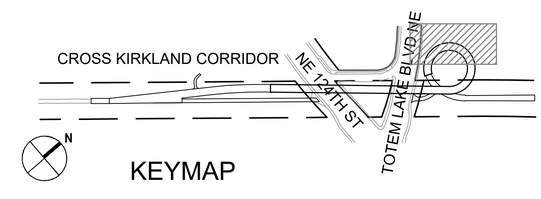

811 Know what's below. Call before you dig.

File: G:\15c\15094c TLPB\Current\TLPB_200_LANDSCAPE.dwg Save Date: Dec 06, 2019 8:55 AM Saved By: JENNIFERA

CITY OF KIRKLAND
DEPARTMENT OF PUBLIC WORKS
123 FIFTH AVENUE KIRKLAND, WA 98033
(425) 587-3800 www.kirklandwa.gov

NO.	DATE	BY	APPR.	REVISION
0	2019/12/06	DD	BM	ISSUE FOR BID

STATE OF WASHINGTON BRIAN MATTHEW MCMAHON NO. 21421 EXP. 7/18/2021 LANDSCAPE ARCHITECT 12/6/19

COWI MIG SvR

BM DESIGNED BY:	2019/12/06 DATE
DD DRAWN BY:	2019/12/06 DATE
MRS CHECKED BY:	2019/12/06 DATE

CITY OF KIRKLAND
TOTEM LAKE PEDESTRIAN BRIDGE

CORRIDOR RESTORATION 6

SHEET: TLC – L –206
SCALE: AS SHOWN
FILENAME: TLPB_200_LANDSCAPE.dwg

SURVEY AND SHEET NOTES:

1) NO SURVEY NORTH OF TRAIL IMPROVEMENTS; ACTUAL LIMITS OF CLEARING AND GRUBBING TO BE COORDINATED WITH CITY. FOR PURPOSES OF BIDDING, THE AREAS SHOWN ARE INCLUDED IN THE 2.6 ACRES OF CLEARING AND GRUBBING.
2) NOTE SCALE CHANGE FROM 10–SCALE TO 40–SCALE NORTH OF MATCHLINE
3) KING COUNTY SEWER MAINS SHOWN ON THIS PLAN ARE BEYOND SURVEY LIMITS AND BASED ON GIS INFORMATION. LOCATION SHOWN IS APPROXIMATE. SEE NOTE 8.

NOTES

1. INVASIVE PLANTS TO BE REMOVED TWICE FROM THE ENTIRE PROJECT SITE THROUGHOUT THE COURSE OF THE PROJECT:
   REMOVAL #1 SHALL OCCUR AT ONSET OF CONSTRUCTION, AND REMOVAL #2 PRIOR TO INSTALLING NEW PROJECT PLANTING.
2. DISPERSE SALVAGED LARGE WOODY DEBRIS AND INSTALL SALVAGED SNAGS WITHIN THE WETLAND AND WETLAND BUFFER PRIOR TO PLANT INSTALLATION. COORDINATE LOCATIONS WITH THE ENGINEER.
3. CONTRACTOR SHALL DESIGN AND PROVIDE IRRIGATION TO THESE AREAS. SEE SPECS. AND SHEETS L–210A AND L–210B FOR DESIGN BUILD IRRIGATION NOTES.
4. CONTRACTOR SHALL PROTECT POROUS ASPHALT PAVEMENT FROM DEBRIS AND SEDIMENT. SEE SPECIFICATIONS.

LEGEND

- PROPERTY LINE
- PROJECT LIMITS
- BRIDGE AND RAILING OVERHEAD, TYP
- RESTORED/ REPLACED SNAG
- MSE WALL, SEE SHEET L–208 FOR MSE WALL PLANTING LAYOUT
- ARBORIST WOOD CHIP MULCH

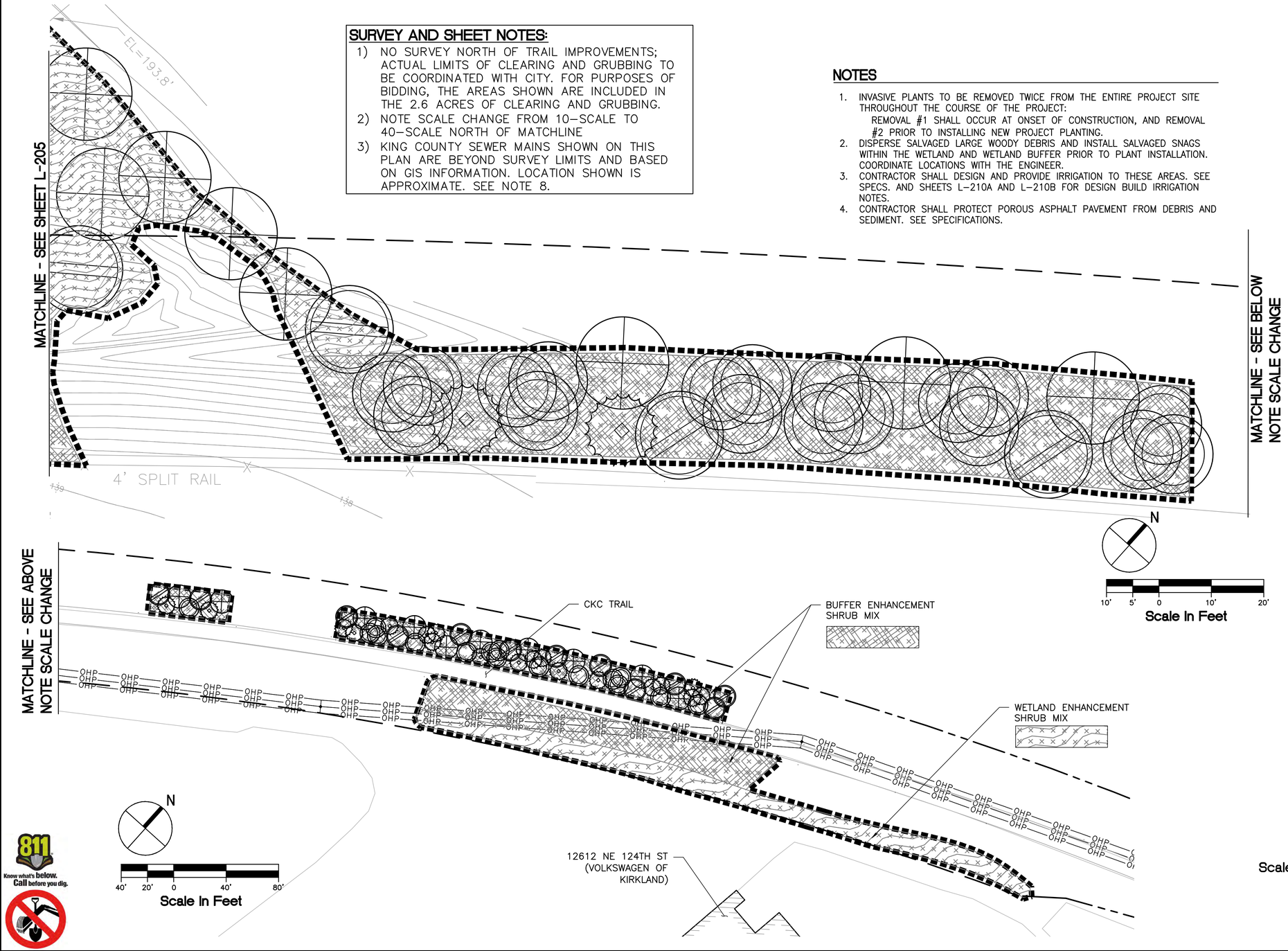

CORRIDOR UNDERSTORY PLANT SCHEDULE

SEE SHEET L-200 FOR THE PLANTING LEGEND

- WETLAND RESTORATION/ENHANCEMENT SHRUB MIX
- WETLAND RESTORATION GROUND COVER MIX
- BUFFER RESTORATION/ENHANCEMENT SHRUB MIX (SEE NOTE 3)
- BUFFER RESTORATION GROUND COVER MIX (SEE NOTE 3)
- DRAINAGE DITCH SEEDING MIX (SEE NOTE 3)
- INFILTRATION POND AND DRAINAGE DITCH MIX ZONE 1 (SEE NOTE 3)
- INFILTRATION POND MIX ZONE 2 (SEE NOTE 3)
- INFILTRATION MIX ZONE 3 (SEE NOTE 3)
- HYDROSEED LAWN (SEE NOTE 3)
- SOD LAWN (SEE NOTE 3)
- TRAIL EDGE SEDUM MIX (SEE NOTE 3)

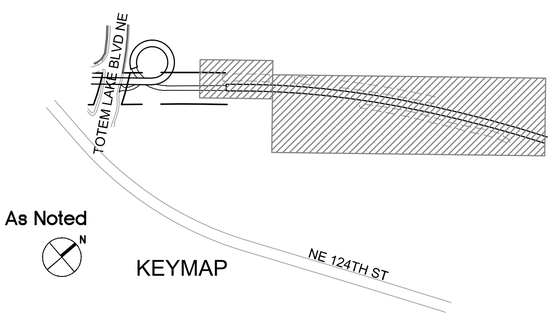

Scale As Noted

KEYMAP

811 Know what's below. Call before you dig.

CITY OF KIRKLAND
DEPARTMENT OF PUBLIC WORKS
123 FIFTH AVENUE KIRKLAND, WA 98033
(425) 587-3800 www.kirklandwa.gov

NO.	DATE	BY	APPR.	REVISION
0	2019/12/06	DD	BM	ISSUE FOR BID

STATE OF WASHINGTON BRIAN MAYNARD 12/6/19 LANDSCAPE ARCHITECT

COWI MIG SvR

BM	2019/12/06	DESIGNED BY: DATE
DD	2019/12/06	DRAWN BY: DATE
MRS	2019/12/06	CHECKED BY: DATE

CITY OF KIRKLAND
TOTEM LAKE PEDESTRIAN BRIDGE

CORRIDOR RESTORATION 7

SHEET: TLC – L –207

SCALE: AS SHOWN

FILENAME: TLPB_200_LANDSCAPE.dwg

File: G:\15c\15094c TLPB\Current\TLPB_200_LANDSCAPE.dwg Save Date: Dec 06, 2019 8:55 AM Saved By: JENNIFERA

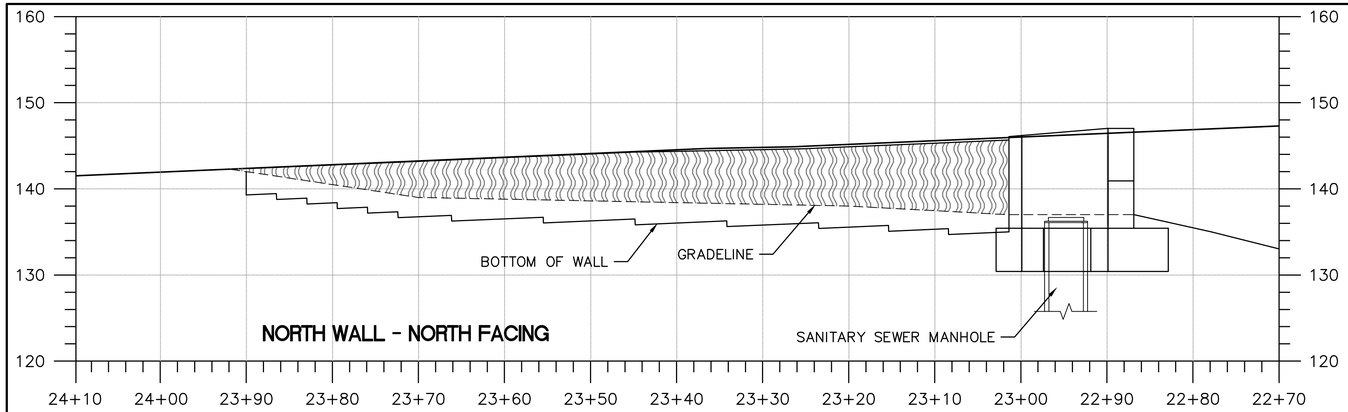

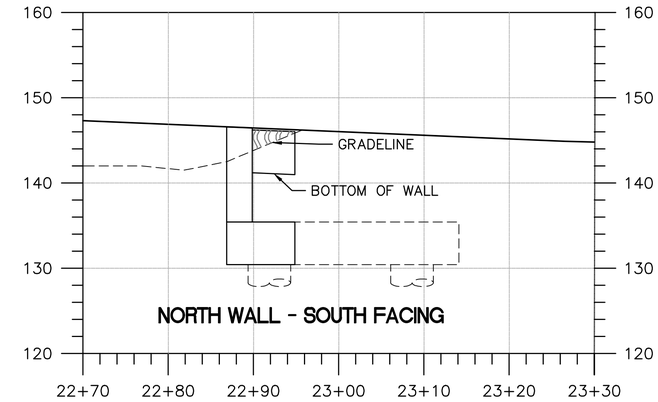

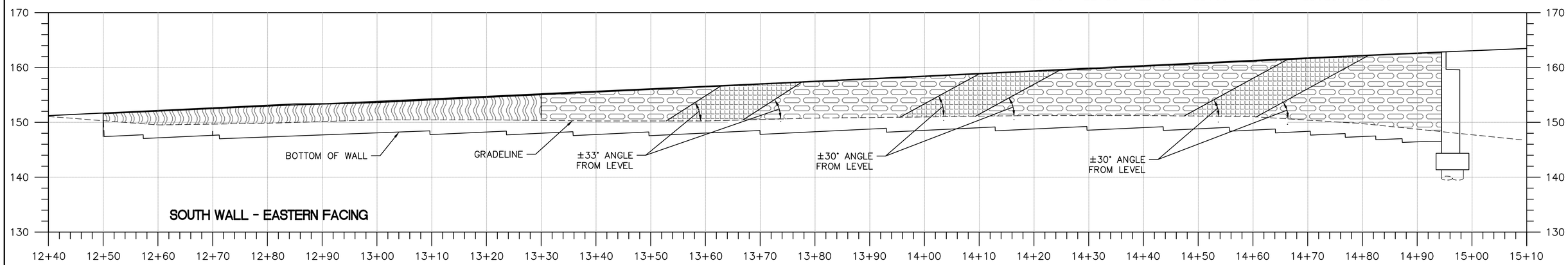

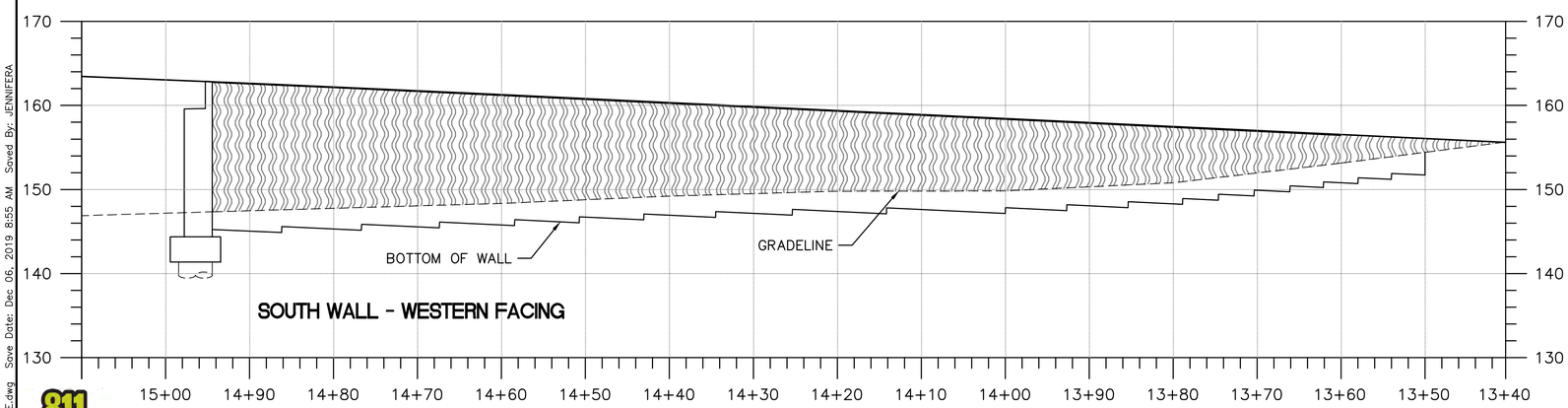

NOTES

1. IRRIGATION FOR WALLS SHALL CONFORM WITH SELECTED MSE WALL SYSTEM MANUFACTURER'S RECOMMENDATIONS. WHERE THE MSE WALL MANUFACTURER DOES NOT PROVIDE AN IRRIGATION RECOMMENDATION, THE DESIGN–BUILD IRRIGATION INSTALLER SHALL PROVIDE THE SYSTEM THAT BEST ENSURES THE PLANTS WILL ESTABLISH.

811 Know what's below. Call before you dig.

MSE WALL PLANT SCHEDULE

DT=DROUGHT TOLERANT, NWN=NORTHWEST NATIVE, EG=EVERGREEN, S=FULL SUN TOLERANT, PS=PART SHADE TOLERANT

				BOTANICAL NAME	COMMON NAME	SIZE / SPACING	QTY.	DETAIL	EXPOSURE / NOTES
	DT	NWN	EG	POLYSTICHUM MUNITUM	WESTERN SWORD FERN	4" POTS/ 18" O.C.	485	PER MSE WALL MANUFACTURERS STANDARD	S, PS
	DT	NWN	EG	OXAUS OREGANA	WOOD SORREL	4" POTS/ 12" O.C.	357	PER MSE WALL MANUFACTURERS STANDARD	
				SEEDED LAWN	SQUARE YARD		240		

10' 5' 0 10' 20'
Scale In Feet

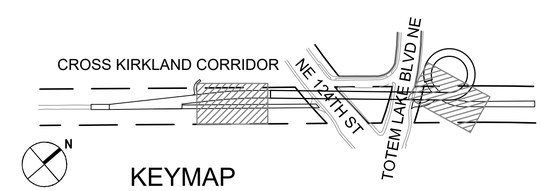

CITY OF KIRKLAND
DEPARTMENT OF PUBLIC WORKS
123 FIFTH AVENUE KIRKLAND, WA 98033
(425) 587-3800 www.kirklandwa.gov

NO.	DATE	BY	APPR.	REVISION
0	2019/12/06	DD	BM	ISSUE FOR BID

STATE OF WASHINGTON BRIAN MARTIN NOSKE LANDSCAPE ARCHITECT EXP. 7/18/2021 12/6/19

COWI MIG SvR

BM 2019/12/06 DESIGNED BY: DATE
DD 2019/12/06 DRAWN BY: DATE
MRS 2019/12/06 CHECKED BY: DATE

CITY OF KIRKLAND
TOTEM LAKE PEDESTRIAN BRIDGE

WALL PLANTING ELEVATION

SHEET: TLC – L –208
SCALE: AS SHOWN
FILENAME: TLPB_200_LANDSCAPE.dwg

File: G:\15c\15094c TLPB\Current\TLPB_200_LANDSCAPE.dwg Save Date: Dec 06, 2019 8:55 AM Saved By: JENNIFERA

IRRIGATION NOTES

1. DESIGN BUILD: PROVIDE DESIGN, LAYOUT, MATERIALS AND INSTALLATION OF A FULLY AUTOMATIC IRRIGATION SYSTEM TO PROVIDE FIXED–SPRAY/DRIP SPRINKLER AND/OR DRIP IRRIGATION TO ALL PLANTING AREAS THROUGHOUT THE PROJECT AREA, INCLUDING MSE WALLS. INCLUDE COMMISSIONING, AS–BUILT IRRIGATION SYSTEM DRAWINGS, WARRANTY AND ONE–YEAR MAINTENANCE. CONTRACTOR SHALL OBTAIN ENGINEER'S APPROVAL OF DESIGN, MANUFACTURER AND MATERIALS PRIOR TO INSTALLATION.

2. FURNISH AND INSTALL AUTOMATIC IRRIGATION SYSTEM IN CONFORMANCE WITH THE APPROVED DESIGN–BUILD DRAWINGS AND THESE NOTES, COMPLETE AND READY FOR USE. WORK CONSISTS OF FURNISHING ALL MATERIALS NECESSARY FOR A COMPLETE INSTALLATION, INCLUDING PIPE, PIPE SLEEVES, WIRE SLEEVES, FITTINGS, VALVES, VALVE BOXES, SWING JOINTS, SPRINKLER HEADS, TO TIE INTO THE EXISTING SYSTEM, AND ALL APPURTENANCES RELATED THERETO. INCLUDED SHALL BE ALL LABOR NECESSARY FOR INSTALLATION, INCLUDING TRENCHING, PLUMBING, BACK–FILLING, ELECTRICAL WORK, ADJUSTMENTS, TESTING, COMMISSIONING, AND ALL OTHER ITEMS OF LABOR NECESSARY FOR A SATISFACTORY OPERATING SYSTEM.

3. THE CONTRACTOR MUST BE A CURRENT WASHINGTON STATE LANDSCAPE INDUSTRY PROFESSIONAL AND HAVE PASSED THE CERTIFIED LANDSCAPE PROFESSIONAL (CLP) EXAM WITH A MINIMUM OF 5 YEARS' EXPERIENCE. THE IRRIGATION SYSTEM MUST BE INSTALLED UNDER THE DIRECT SUPERVISION OF A CERTIFIED IRRIGATION TECHNICIAN OR JOURNEY PLUMBER WITH AT LEAST 5 YEARS EXPERIENCE. ALL POTABLE WATER SYSTEM COMPONENTS SHALL BE INSTALLED BY A WASHINGTON STATE LICENSED PLUMBER AND ALL TESTING OF THE BACKFLOW PREVENTION EQUIPMENT SHALL BE DONE BY A WASHINGTON STATE CERTIFIED BACKFLOW ASSEMBLY TESTER (BAT). CONFIRM SYSTEM IS TESTED WITHIN 60 DAYS PRIOR TO INSTALLATION.

4. IRRIGATION FOR WALLS SHALL CONFORM WITH SELECTED MSE WALL SYSTEM MANUFACTURER'S RECOMMENDATIONS. WHERE THE MSE WALL MANUFACTURER DOES NOT PROVIDE AN IRRIGATION RECOMMENDATION, THE DESIGN–BUILD IRRIGATION INSTALLER SHALL PROVIDE THE SYSTEM THAT BEST ENSURES THE PLANTS WILL ESTABLISH.

5. IRRIGATION ZONE CONTROL SHALL BE AUTOMATIC OPERATION WITH CONTROLLER AND AUTOMATIC CONTROL VALVES.

   DELEGATED DESIGN: DESIGN 100 PERCENT COVERAGE IRRIGATION SYSTEM, INCLUDING CALCULATIONS USING PERFORMANCE REQUIREMENTS AND DESIGN CRITERIA INDICATED, BY A QUALIFIED CERTIFIED IRRIGATION DESIGNER OR LANDSCAPE ARCHITECT WITH DOCUMENTED 3 YEARS IRRIGATION DESIGN EXPERIENCE.

   MINIMUM WORKING PRESSURES: THE FOLLOWING ARE MINIMUM PRESSURE REQUIREMENTS FOR PIPING, VALVES, AND SPECIALTIES UNLESS OTHERWISE INDICATED:
   1. IRRIGATION MAIN PIPING: 200 PSIG (1380 KPA).
   2. CIRCUIT PIPING: 150 PSIG (1035 KPA).

6. SUBMIT THE FOLLOWING AT LEAST 21 WORKING DAYS PRIOR TO PERFORMING ANY WORK:
   1. COMPLETE MATERIALS LIST, INCLUDING MANUFACTURER CATALOG DATA AND FULL DESCRIPTIVE LITERATURE, INCLUDING CURRENT MANUFACTURER'S PRICE LIST. SUBMITTAL SHALL BE IN ONE COMPLETE PACKAGE, EXCEPT AS–BUILT DRAWINGS.
   2. INSTALLER QUALIFICATION DATA.
   3. IRRIGATION DESIGNER QUALIFICATIONS.
   4. IRRIGATION SYSTEM INSTALLATION SCHEDULE.
   5. SLEEVING PLAN THAT COORDINATES WITH ROAD, PAVING AND UTILITY WORK.
   6. IRRIGATION SYSTEM PLAN:
      A. IRRIGATION PLAN WILL BE DRAWN AT EITHER 1"=20' OR 1"=10' ON 22"X34" SHEETS. DENOTE TREE, SHRUB, GROUNDCOVER AND GRASS AREAS SEPARATELY. PLANS SHALL SHOW LOCATIONS OF EXISTING, NEW, AND FUTURE UNDERGROUND UTILITIES. DESIGN IRRIGATION SYSTEM TO AVOID OR MITIGATE UTILITY CONFLICTS.
      B. GROUP LIKE PLANT EXPOSURES TOGETHER IN ONE ZONE.
      C. GROUP PLANTS WITH SIMILAR WATER NEEDS TOGETHER IN A ZONE.
      D. EACH ZONE SHALL HAVE SIMILAR PRECIPITATION RATES AND SPRINKLERS/DRIP LINES WITHIN THE SAME FAMILY BY THE SAME MANUFACTURER.
      E. CONTROLLER CAN BE SET TO RUN 2 ZONES AT ONCE PROVIDED WATER REQUIREMENTS ARE SIMILAR.
      F. ELEVATION DIFFERENCES WITHIN A ZONE SHALL NOT EXCEED 6 FEET.
      G. ENSURE COMPLETE COVERAGE AND ADEQUATE PRESSURE FOR ALL HEADS. INCLUDE CALCULATIONS TO ENSURE FURTHEST HEAD HAS ADEQUATE PRESSURE TO FUNCTION.
      H. INCLUDE LOCATION, HOUSING AND ELECTRICAL CONNECTION (AS APPLICABLE) FOR CONTROLLERS. ENSURE ADEQUATE POWER.
      I. INCLUDE POINT OF CONNECTION DRAWING DOCUMENTING PRESSURE AND BACK FLOW PREVENTION.

7. IRRIGATION SYSTEM TYPICAL INSTALLATION DETAILS, TO INCLUDE MASTER VALVE AND FLOW SENSOR, GATE VALVE, REMOTE CONTROL VALVE, POP–UP ROTOR HEAD ASSEMBLY, POP–UP SPRAY HEAD ASSEMBLY, IRRIGATION PIPE TRENCH, AND OTHERS AS NECESSARY FOR PROPOSED SYSTEM. A CUSTOM DETAIL MAY BE REQUIRED TO RAISE AND PROTECT IRRIGATION SPRAY HEADS ALONG THE MSE WALL.

8. APPROPRIATE BACKFLOW DEVICES AND/OR PRESSURE REDUCING VALVES SHALL BE INSTALLED ACCORDING TO THE LATEST VERSION OF THE UNIFORM PLUMBING CODE AS ADOPTED BY THE CITY OF KIRKLAND BUILDING DEPARTMENT.

9. IRRIGATION SERVICE – THE CONTRACTOR SHALL UPSIZE AND CONNECT TO THE EXISTING WATER METER OR INSTALL A NEW WATER METER, AS APPROPRIATE, TO MEET THE DESIGN OF THE SYSTEM. THE SERVICE SHALL BE INSTALLED PER SPECIFICATIONS OUTLINED IN THE CURRENT EDITION OF THE PUBLIC WORKS DEPARTMENT'S PRE–APPROVED PLANS MANUAL. THE CONTRACTOR SHALL COORDINATE WITH THE CITY OF KIRKLAND PUBLIC WORKS DEPARTMENT FOR THE INSTALLATION OF THE WATER METER (FEES MAY APPLY).

10. PIPE, TUBING AND FITTING – ALL PIPE AND TUBING SHALL BE ¾" TO 1" SCHEDULE 40 PVC OR APPROVED EQUAL (ALL PIPING IN MEDIAN ISLANDS TO BE 1"). ALL PLASTIC FITTINGS SHALL BE SCHEDULE 80 PVC. ALL SLEEVING SHALL BE 2" SCHEDULE 40 PVC. 1" WATER SERVICE LINES SHALL USE ¾" METER UNLESS OTHERWISE APPROVED. USE TEFLON TAPE ON ALL THREADED FITTINGS, REGARDLESS OF PIPE TYPE.

11. POLYVINYL CHLORIDE PIPE, FITTINGS AND SLEEVING – SLEEVES REQUIRED FOR MAIN AND LATERAL LINES LOCATED UNDER PAVING SHALL BE SCHEDULE 80 PVC, WITH INNER DIAMETER OF SLEEVE EQUAL TO TWICE THE OUTSIDE DIAMETER OF INSERTED PIPE, AND MAXIMUM 1 INSERTED PIPE PER SLEEVE. ALL WIRING SHALL BE IN ITS OWN SEPARATE SCHEDULE 80 PVC SLEEVE, INDEPENDENT FROM THE PIPING SLEEVES. ALL PVC PIPE SHALL BE MARKED WITH THE MANUFACTURER'S NAME, CLASS OF PIPE AND NSF SEAL. IRRIGATION SLEEVES SHALL EXTEND A MINIMUM OF 2 FEET BEYOND THE LIMITS OF PAVEMENT.

12. AUTOMATIC CONTROLLER 1, SOUTH OF NE 124TH ST. SHALL BE A BATTERY OPERATED NELSON MODEL 8030 WITH ADAPTER FOR WEATHERMATIC. IF USING A FIXED CONTROLLER WITH A DESIGNATED POWER SOURCE SUPPLY, A WEATHERMATIC SMARTLINE CONTROLLER SHALL BE USED. A SLW 10 WEATHER STATION SHOULD ALSO BE INSTALLED. CONTROLLER SHALL BE OPERABLE AND FULLY FUNCTIONING PRIOR TO FINAL INSPECTION.

    AUTOMATIC CONTROLLER 2, NORTH OF TOTEM LAKE BLVD. NE SHALL BE A CALSENSE CS3000 CONTROLLER WITH WEATHER INTERFACE KIT CS3–W–KIT. CONTROLLER SHALL HAVE ENOUGH STATIONS TO MEET THE ZONES IN THE SYSTEM. MINIMUM CONTROLLER SIZE IS 8 STATIONS. USE CS38ST–KIT 8 STATION CARD PLUS TERMINAL AS REQUIRED. CONTROLLER SHALL INCLUDE ET GAGE, TIPPING RAIN BUCKET AND WIND GAGE. CONTROLLER SHALL INCLUDE A FLOW METER, SIZE BASED UPON DEMAND OF IRRIGATION SYSTEM PER MANUFACTURER'S RECOMMENDATIONS.

13. SPRINKLER HEADS – POP–UP SPRAY HEADS, IMPACT HEADS AND BUBBLERS SHALL BE HUNTER OR APPROVED EQUAL. ALL HEADS SHALL HAVE BUILT–IN PRESSURE REGULATING DEVICE, AND MATCHED PRECIPITATION RATE NOZZLES WITH ADJUSTING SCREWS. IF INSTALLED ALONG CURBING, HEADS SHALL BE FLUSH AND ADJACENT TO TOP OF CURB. NOZZLES SHALL BE MP ROTATORS, OR APPROVED EQUAL.

14. VALVE BOXES AND PROTECTIVE SLEEVES – VALVE BOXES FOR CONTROL VALVES SHALL BE CARSON 1419 BOX, WITH LOCKING LID OR APPROVED EQUAL. VALVE BOXES FOR DOUBLE CHECK VALVE ASSEMBLY SHALL BE CARSON 1324 WITH LOCKING LID, OR APPROVED EQUAL.

15. AUTOMATIC CONTROL VALVES – AUTOMATIC CONTROL VALVES SHALL BE WEATHERMATIC 2100 SERIES. A MANUAL CONTROL SHALL BE PROVIDED FOR OPERATION WITH OR WITHOUT THE CONTROL WIRING INSTALLED.

16. WIRING FOR AUTOMATIC CONTROL VALVES AND MASTER VALVES – AUTOMATIC CONTROL VALVE WIRES SHALL BE INSULATED SINGLE STRAND COPPER DESIGNED FOR 20 TO 50 VOLTS AND UL APPROVED AS TYPE U.F. (UNDERGROUND FEEDER). THE UL AND U.F. DESIGNATIONS SHALL BE CLEARLY MARKED OR INDENTED ON THE INSULATION JACKET OF THE WIRE.

    EXPANSION CURLS SHALL BE PROVIDED WITHIN 3 FEET OF EACH WIRE CONNECTION TO SOLENOID AND AT LEAST EVERY 300 FEET IN LENGTH OF CONTROL WIRE.

    COLOR CODED WIRES SHALL BE USED FOR ALL CONTROL WIRES AND THE FOLLOWING COLORS ARE THE ONLY COLORS THAT WILL BE ACCEPTED:
    POWER (OR LEAD–IN) – BLACK OR RED
    COMMON (OR NEUTRAL) – WHITE
    SPARES (SEE BELOW) – ORANGE

    ONE UNCONNECTED SPARE WIRE (COLOR ORANGE) FOR EACH 4 ZONES SHALL BE RUN FROM THE CONTROLLER THROUGH EACH INTERMEDIATE CONTROL VALVE BOX. PROVIDE AT LEAST A 24–INCH LONG, TIGHT LOOP FOR EACH WIRE IN EACH BOX. FOR CLARIFICATION; ZONES 1 THRU 4 REQUIRE ONE SPARE WIRE, ZONES 5 THRU 8 REQUIRE AN ADDITIONAL SPARE WIRE, AND SO ON. WHERE CONTROL VALVES RUN IN MULTIPLE DIRECTIONS FROM THE CONTROLLER, AT LEAST 1 SEPARATE SPARE WIRE SHALL BE RUN IN EACH DIRECTION. THE SPARE WIRE(S) SHALL ALWAYS BE INSTALLED TO THE FARTHEST VALVE(S) LOCATION(S) FROM THE CONTROLLER.

    THE MASTER VALVE SHALL BE INSTALLED WITH SEPARATE POWER AND COMMON WIRES WHICH SHALL BE DIFFERENT COLORS THAN THE OTHER CONTROL WIRES. A SPARE WIRE SHALL ALSO BE INSTALLED TO THE MASTER VALVE. THE FOLLOWING WIRE COLORS ARE THE ONLY COLORS THAT WILL BE ACCEPTED:
    POWER – BLUE
    COMMON – YELLOW
    SPARE – ORANGE

17. QUICK COUPLING EQUIPMENT – QUICK COUPLING EQUIPMENT SHALL BE RAINBIRD #44DLRC OR APPROVED EQUAL. PROVIDE 4 OPERATING KEYS. QUICK COUPLER VALVES SHALL BE LOCATED AS SHOWN ON THE CONTRACT DOCUMENTS OR AT APPROXIMATELY 200 FOOT INTERVALS, UNLESS OTHERWISE DIRECTED BY THE ENGINEER THROUGH THE DESIGN REVIEW PROCESS. ONE ADDITIONAL QUICK COUPLING VALVE SHALL BE INSTALLED AT THE POINT OF CONNECTION (POC) FOR USE OF COMPRESSED AIR FOR WINTERIZING THE SYSTEM. ALL QUICK COUPLING VALVES SHALL BE INSTALLED IN A 10–INCH DIAMETER VALVE BOX.

18. MANUAL VALVES – GATE VALVES (GV): (2–INCH O.D. AND SMALLER) SHALL BE FLANGED, IRON BODY, BRASS TRIMMED, RESILIENT DOUBLE DISC WEDGE, AND INTEGRAL TAPER SEATS WITH NON–RISING STEM AND SQUARE ACTUATOR. ALL GATE VALVES SHALL BE CLASS 150 WITH A MINIMUM 150 PSI – 300 WOG. GATE VALVES SHALL BE KENNEDY, MUELLER, OR HAMMOND, OR APPROVED EQUAL.

    LATERAL (SUB–MAIN) ISOLATION VALVES (LIV): (2–INCH O.D. THROUGH 3–INCH O.D.) SHALL BE 200 PSI RATED ANGLE GLOBE VALVES WITH INTEGRALLY RESTRAINED ENDS. ENDS SHALL BE MALE SWIVEL OR INTEGRALLY RESTRAINED PUSH ON GASKETED JOINT AS REQUIRED. COMPONENTS SHALL BE DUCTILE IRON, 316 STAINLESS STEEL, AND LOW ZINC BRONZE COMPLYING WITH ASTM A536, ASTM A276, ASTM B62–C83600 RESPECTIVELY OR EQUIVALENT. DUCTILE IRON SHALL BE FUSION BOND EPOXY COATED. GASKETED JOINTS SHALL BE SBR RUBBER AND COMPLY WITH ASTM F477. INTERNAL SEALS SHALL BE EPDM RUBBER. LATERAL (SUB–MAIN) ISOLATION VALVES SHALL BE HARCO, OR APPROVED EQUAL.

    MANUAL DRAIN (STOP & WASTE) VALVES: SHALL BE ALL BRONZE CONSTRUCTION, 175 PSI WATER WORKING PRESSURE, MUELLER ORISEAL MARK II, OR EQUAL. DRAIN VALVES (SPRAY SYSTEM) SHALL BE MUELLER MARK II ORISEAL H–10284, STOP AND WASTE, OR APPROVED EQUAL.

19. SWING JOINTS – PRE–FABRICATED SWING JOINTS, FOR IRRIGATION HEADS, SHALL BE TRIPLE SWING JOINTS, USING SCHEDULE 80 OR CLASS 315 PVC THREADED FITTINGS. SWING JOINTS SHALL CONSIST OF STREET ELLS, ELLS, AND NIPPLES FOR FULL ADJUSTABILITY. FITTINGS SHALL HAVE "O" RING SEALS. ALL PVC PIPES AND FITTINGS FOR SWING JOINTS SHALL CONFORM TO ALL REQUIREMENTS OF ASTM D3139. NO ADDITIONAL THREADED PVC NIPPLES OF ANY KIND ARE ALLOWED IN SWING JOINT FABRICATIONS. ALL SWING JOINTS SHALL BE THREADED INTO SCHEDULE 80 PVC TEES OR SCHEDULE 80 PVC 90–DEGREE ELLS THAT ARE GLUED INTO THE SCHEDULE 40 MAINLINE AND LATERAL PIPES.

20. BACKFILL MATERIALS – BACKFILL AROUND ALL IRRIGATION HEADS SHALL BE PER PLANS. FOR SUITABLE BEDDING MATERIAL AROUND ALL PIPES AND EQUIPMENT AS SHOWN ON THE DETAILS, USE NATIVE TOPSOIL WITH NO ROCKS OR OTHER DEBRIS MORE THAN 1 INCH DIAMETER, OR COMMON BUILDER'S SAND.

21. WORK AROUND EXISTING TREES – EXERCISE CARE WHEN EXCAVATING TRENCHES NEAR EXISTING TREES PER CONTRACT PLANS. ARBORIST REVIEW REQUIRED. WHERE ROOTS ARE 1–1/2 INCHES AND GREATER IN DIAMETER HAND EXCAVATE AND/OR AIR SPADE AND TUNNEL. WHEN LARGE ROOTS ARE EXPOSED, WRAP WITH HEAVY BURLAP FOR PROTECTION AND PREVENT EXCESSIVE DRYING. TRENCHES DUG BY MACHINES ADJACENT TO TREES HAVING ROOTS 2 INCHES AND LESS IN DIAMETER SHALL HAVE THE SIDES HAND TRIMMED MAKING A CLEAN CUT OF THE ROOTS. TRENCHES HAVING EXPOSED TREE ROOTS SHALL BE BACK–FILLED WITHIN 24 HOURS UNLESS ADEQUATELY PROTECTED WITH MOIST BURLAP OR CANVAS. MAINTAIN MOISTURE ON PROTECTIVE CLOTH UNTIL BACKFILLING.

22. TRENCHING – THE TOP 6 INCHES OF SOIL SHALL BE KEPT SEPARATE FROM SUBSOIL AND SHALL BE REPLACED AS THE TOP LAYER WHEN BACKFILLING IS CONDUCTED. TRENCHES SHALL BE EXCAVATED FOR ALL PIPE TO PROVIDE THE MINIMUM DEPTH OF COVER BELOW FINISH GRADE OF 18 INCHES MINIMUM FOR LIVE LINES (MAINS), AND 14 INCHES MINIMUM FOR LATERALS AND ALL OTHERS, NO WIDER AT ANY POINT THAN IS NECESSARY TO LAY THE PIPE OR INSTALL EQUIPMENT. TRENCHES SHALL BE EXCAVATED WITH VERTICAL SIDES. LOCATE OUTSIDE OF PAVED AREAS WHEREVER POSSIBLE. ALL PVC OR POLYETHYLENE PIPE INSTALLED UNDER AREAS TO BE PAVED SHALL BE PLACED IN IRRIGATION SLEEVES. TRENCH BOTTOM MUST BE FREE OF ROCKS OR SHARP–EDGED OBJECTS. MATERIALS UNSUITABLE FOR BEDDING OF PIPE TO BE REMOVED TO A DEPTH 4 INCHES BELOW TRENCH BOTTOM, AND REPLACED WITH SUITABLE BEDDING MATERIAL AS DIRECTED BY THE ENGINEER. SUITABLE BEDDING MATERIAL SHALL BE: EXCAVATED TRENCH MATERIAL, FREE FROM ROCKS, ROOTS, STICKS, DEBRIS OR OTHER SHARP OBJECTS OVER ONE INCH IN DIAMETER; OR SAND, AS REQUIRED. ALL TRENCHES MUST BE STRAIGHT, WITH APPROPRIATE PIPE FITTINGS USED TO ALLOW PIPE TO BE LAID WITHOUT UNDUE BENDING AND NOT HAVE ABRUPT CHANGES IN GRADE. THE USE OF AN UNDERGROUND VIBRATORY PLOW OR SIMILAR DEVICE TO PULL PIPE WILL NOT BE PERMITTED. PIPELINES SHOWN PARALLEL ON DRAWING MAY BE PLACED IN A COMMON TRENCH BUT SEPARATED BY AT LEAST 6 INCHES.

23. INSTALL PIPE, VALVES, HEADS, WIRING AND OTHER SYSTEM COMPONENTS PER APPROVED IRRIGATION SYSTEM PLAN AND DETAILS SUBMITTED PER THESE REQUIREMENTS, AND IN CONFORMANCE WITH APPLICABLE CODE.

24. BACKFILLING – BACKFILLING SHALL BE DONE WHEN PIPE IS NOT IN AN EXPANDED CONDITION DUE TO HEAT OR PRESSURE. WHILE BACKFILLING THE TRENCHES, FILL AND TAMP 4 INCHES BELOW AND 6 INCHES ABOVE THE PIPE AND FITTINGS WITH APPROVED SUITABLE BEDDING MATERIAL OR SAND AS REQUIRED. THE REMAINDER OF THE BACKFILL SHALL CONTAIN NO LUMPS OR ROCKS LARGER THAN THREE INCHES. IF NO SODDING IS REQUIRED, THE TOP 6 INCHES OF BACKFILL SHALL BE REPLACED BY TOPSOIL WHERE IT EXISTS (FREE OF ROCKS OVER ONE INCH, SUBSOIL OR TRASH) OR SELECTED FILL SOIL OR SAND IF SOIL CONDITIONS ARE ROCKY. ALL ROOTS, ROCKS

[redacted]

CITY OF KIRKLAND
DEPARTMENT OF PUBLIC WORKS
123 FIFTH AVENUE KIRKLAND, WA 98033
(425) 587-3800 www.kirklandwa.gov

NO.	DATE	BY	APPR.	REVISION
0	2019–12–06	DD	BM	ISSUE FOR BID

STATE OF WASHINGTON BRIAN R. MARTIN LANDSCAPE ARCHITECT 12/6/19

COWI MIG SvR

BM	2019/12/06	DESIGNED BY: DATE
DD	2019/12/06	DRAWN BY: DATE
MRS	2019/12/06	CHECKED BY: DATE

CITY OF KIRKLAND
TOTEM LAKE PEDESTRIAN BRIDGE

IRRIGATION NOTES 1

SHEET: TLC – L –210A
SCALE: AS SHOWN
FILENAME: TLPB_210_IRRIGATION.dwg

File: G:\15c\15094c TLPB\Current\TLPB_210_IRRIGATION.dwg Save Date: Dec 06, 2019 8:56 AM Saved By: JENNIFERA

IRRIGATION NOTES, CONTINUED

AND SURPLUS EXCAVATION SHALL BE REMOVED FROM THE SITE UNLESS OTHERWISE DIRECTED.

TRENCHES UNDER ROADS OR PAVED AREAS SHALL BE BACK–FILLED AND TAMPED WITH A MECHANICAL TAMPER IN SUCCESSIVE 6 INCH LIFTS. REPLACE PAVING TO THE SATISFACTION OF THE ENGINEER.

PRIOR TO COMPLETING BACKFILL, PLACE DETECTION TAPE 6 INCHES BELOW FINISHED GRADES AND DIRECTLY ABOVE THE INSTALLED LATERAL AND SUPPLY MAINS FOR FUTURE LINE DETECTION. PROVIDE EXTRA LENGTH TO CLEARLY EXPOSE ENDS IN THE VALVE BOXES. BEFORE COMPLETE BACK–FILLING, ALL UNDERGROUND APPURTENANCES INCLUDING RISERS, VALVES, DCVA, DRAIN VALVES, AND JOINTS MUST REMAIN EXPOSED SO THAT THEY CAN BE VIEWED DURING TESTING. IF, FOR ANY REASON, ANY PART OF THE SPRINKLER SYSTEM IS BACK–FILLED BEFORE APPROVED LOCATION, TESTING, OR INSPECTION IS AUTHORIZED, IT MUST BE COMPLETELY UNCOVERED AND EXPOSED UNTIL APPROVED FOR BACK–FILLING BY THE ENGINEER.

25. CLEAN–UP – UPON COMPLETION OF OPERATIONS AND PRIOR TO WATERING, CLEAN ALL ADJOINING AREAS SUCH AS PAVING, CURBS, AND LAWNS OF DEBRIS CAUSED BY THE WORK ON THIS PROJECT, OR ANY PART OF THIS PROJECT. ALL POROUS PAVEMENT SHALL BE VACUUMED CLEAN, AND ALL OTHER HARD SURFACED AREAS SHALL BE WASHED CLEAN. DAILY CLEAN UP SHALL BE REQUIRED ON ALL AREAS USED FOR CIRCULATION, PARKING, OR OTHER DAILY USE.

26. PRESSURE TESTING – PERFORM HYDROSTATIC TESTS ON SYSTEM AND DOCUMENT WITH PHOTOGRAPHS UNLESS THE ENGINEER IS AVAILABLE TO WITNESS THE TESTING. FURNISH NECESSARY PUMP, GAUGES AND ALL OTHER TEST EQUIPMENT.

    ALL PVC MAIN LINES WITH GATE (ISOLATION) VALVES INSTALLED AND CLOSED SHALL BE FLUSHED AND PRESSURE TESTED WITH ALL JOINTS EXPOSED TO 150 PSI UNTIL WATERTIGHT. MAXIMUM PSI LOSS IN A 30 MINUTE TEST PERIOD SHALL BE 5 PSI. ALL PVC LATERAL LINES WITH RISERS INSTALLED AND CAPPED SHALL BE FLUSHED AND PRESSURE TESTED AT 60 PSI WITH ALL JOINTS EXPOSED TO SERVICE LINE PRESSURE REQUIRED IN DESIGN FOR 30 MINUTES. IF THE SYSTEM REQUIRES A PUMP, THE SERVICE LINE PRESSURE TEST IS REQUIRED WITH THE PUMP IN OPERATION. MAXIMUM PSI LOSS ALLOWED SHALL BE 5 PSI.

    ALL GAUGES USED IN THE TESTING OF WATER PRESSURES SHALL BE CERTIFIED CORRECT BY AN INDEPENDENT TESTING LABORATORY IMMEDIATELY PRIOR TO USE ON THE PROJECT. AN INSPECTION REPORT SHALL BE MADE AND SUBMITTED AFTER THE COMPLETION OF TESTING.

27. RECORD DOCUMENTS – THE CONTRACTOR SHALL KEEP A CURRENT WORKING SET OF DRAWINGS WITH ALL "AS–BUILT" CHANGES OR ACTUAL CONDITIONS AS WORK PROCEEDS, TO BE SUBMITTED TO ENGINEER WITHIN 7 DAYS OF COMPLETION OF IRRIGATION SYSTEM INSTALLATION. ENGINEER MAY REQUEST TO REVIEW RECORDS DAILY. THE "AS–BUILT" PLANS SHALL BE REVIEWED AND ALL FEATURES EXPLAINED. THE "AS–BUILT" PLANS SHALL CONSIST OF RED–LINED CORRECTIONS, NOTES, COMMENTS, ETC. ON A CLEAN BOND PAPER COPY. ANY MAJOR DEVIATIONS FROM THE ORIGINAL DESIGN (AS PREVIOUSLY APPROVED) SHALL BE DOCUMENTED ON THE "AS–BUILTS" AND EXPLAINED AT THE SESSION. ALL CRITICAL DIMENSIONS SHALL BE SHOWN. THE ENGINEER SHALL REVIEW AND APPROVE THE "AS–BUILT" PLANS SUBMITTED BY THE CONTRACTOR, IF ENGINEER FINDS CONTRACTOR'S RECORDS TO BE INCOMPLETE THE CONTRACTOR IS RESPONSIBLE FOR OBTAINING REQUIRED AS BUILT DOCUMENTATION.

    SUBMIT DOCUMENTATION OF RESULTS FROM SYSTEM PRESSURE TESTING.

    SUBMIT RECORD DOCUMENTS, INCLUDING AS–BUILT DRAWINGS, PRODUCT INFORMATION, CONTROLLER CHART, WATERING SCHEDULE AND OPERATION AND MAINTENANCE GUIDELINES AFTER SYSTEM HAS BEEN INSTALLED, TESTED AND APPROVED BY ENGINEER.

IRRIGATION SYSTEM COMMISSIONING AND WARRANTY

1. COVERAGE TEST – BEFORE THE IRRIGATION SYSTEM WILL BE ACCEPTED, THE CONTRACTOR, IN THE PRESENCE OF THE ENGINEER, SHALL PERFORM A WATER COVERAGE TEST FOR EACH ZONE OF THE SYSTEM. TEST SHALL BE PERFORMED UNDER AUTOMATIC OPERATION. NOTIFY THE ENGINEER AT LEAST 5 WORKING DAYS IN ADVANCE OF COVERAGE TEST. NEVER PERFORM THIS OR ANY OTHER TESTING OF THE IRRIGATION SYSTEM EQUIPMENT USING POWER SUPPLIED BY A PORTABLE GENERATOR. THE CONTRACTOR SHALL BE RESPONSIBLE FOR CHANGING NOZZLES, ETC., AT THE DISCRETION OF ENGINEER, IN ORDER TO OBTAIN FULL COVERAGE WITH MINIMUM OVERSPRAY. THE CONTRACTOR WILL BE REQUIRED TO ADJUST AND/OR REPLACE NOZZLES, ETC. AS NECESSARY TO MEET THIS REQUIREMENT. PRIOR TO ARRIVAL OF THE ENGINEER, THE CONTRACTOR SHALL ACCOMPLISH THE FOLLOWING: COMPLETE ALL WORK INCLUDING BALANCING, ADJUSTING THE SYSTEM (PRESSURE REDUCING VALVES, FLOW ADJUSTMENT KEYS, NOZZLES, ETC.) TO PROVIDE OPTIMUM COVERAGE WITHOUT FOGGING.

2. FUNCTIONALITY TEST – A FUNCTIONALITY TEST OF THE CONTROL/ COMMUNICATION SYSTEMS SHALL BE PERFORMED AND DEMONSTRATE THAT ALL PARTS OF THE SYSTEM FUNCTION AS SPECIFIED OR INTENDED. THE FUNCTIONALITY TEST FOR EACH NEW SYSTEM SHALL CONSIST OF NOT LESS THAN 30 CALENDAR DAYS OF CONTINUOUS, SATISFACTORY OPERATION. ANY MATERIALS DETERMINED TO BE FAULTY AS PART OF THE INSTALLATION SHALL BE REPLACED OR CORRECTED BY THE CONTRACTOR AT THEIR EXPENSE IN A MANNER RESPECTIVE TO THE CONTRACT DOCUMENTS. IN THE EVENT OF A SYSTEM FAILURE DUE TO FAULTY INSTALLATION OR WORKMANSHIP, THE 30 DAY PERIOD WILL BE REPEATED UNTIL TESTING IS COMPLETE.

3. SYSTEM COMMISSIONING, OPERATION AND TRAINING – A TRAINING AND ORIENTATION SESSION IS REQUIRED. THE CONTRACTOR, THE IRRIGATION SUB–CONTRACTOR, THE ENGINEER, AND OTHER STAFF DEEMED NECESSARY BY OWNER SHALL BE PRESENT. THE DATE AND TIME OF THE SESSION SHALL BE SUBJECT TO THE APPROVAL OF THE ENGINEER.

    THE CONTRACTOR SHALL PROVIDE THE ENGINEER WITH THE NECESSARY KEYS AND/OR OTHER TOOLS NECESSARY TO OPERATE/DRAIN/ACTIVATE THE SYSTEM AND SPEND SUFFICIENT TIME WITH THE ENGINEER TO ENSURE THAT THE SYSTEM OPERATION/MAINTENANCE/WINTERIZING CAN CONTINUE AFTER DEPARTURE OF THE CONTRACTOR. THE CONTRACTOR SHALL PROVIDE 2 CONTROLLER REMOTES TO THE ENGINEER AT THIS STAGE.

    FOLLOWING DE–WINTERIZATION, CONTRACTOR TO MEET WITH THE OWNER'S MAINTENANCE REPRESENTATIVE WITH THE AS–BUILT AND CONTROLLER CHART AND WALK THE ENTIRE SIGHT REVIEWING OPERATIONS AND ANSWERING QUESTIONS.

4. A COMPLETE OPERATIONS AND MAINTENANCE (O&M) MANUAL SHALL BE PREPARED BY THE CONTRACTOR AND 2 COPIES OF THE MANUAL SHALL BE TURNED OVER TO THE OWNER AT THE FINAL INSPECTION. THE MANUALS SHALL CONSIST OF THREE RING BINDERS CONTAINING: (A) CATALOGS OF ALL MATERIALS USED; (B) COMPLETE PARTS LIST OF ALL MATERIALS; (C) A WRITTEN SUMMARY OF ALL OPERATIONS DATA INCLUDING SPRING START–UP AND WINTERIZATION TECHNIQUES, CONTROLLER PROGRAMMING, VALVE CLEANING, IRRIGATION ADJUSTMENTS, BACKFLOW PREVENTER OPERATION AND ANY OTHER INFORMATION REQUIRED TO OPERATE AND MAINTAIN SYSTEM; (D) TWO LOCAL DISTRIBUTORS; (E) THE CONTROLLER STATION TIMING SHALL BE SUBMITTED TO ENGINEER AND SET BY THE CONTRACTOR. SMALLER ZONES WITH SIMILAR CONDITIONS CAN BE OPERATED SIMULTANEOUSLY.

    PROVIDE CONTROLLER CHARTS AS FOLLOWS – THE RECORD DOCUMENTS SHALL BE APPROVED BY THE ENGINEER BEFORE CHARTS ARE PREPARED. THE CHART SHALL BE A REDUCTION OF THE ACTUAL RECORD DOCUMENTS PREPARED BY THE CONTRACTOR. PROVIDE ONE CONTROLLER CHART PER CONTROLLER. CONTROLLER CHART SHALL FIT IN BEHIND CONTROLLER DOOR. THE CHART SHALL BE A BOND COPY PRINT WITH A DIFFERENT PASTEL TRANSPARENT COLOR TO SHOW EACH SEPARATE ZONE. VERIFY THAT THE ZONE NUMBER AS SHOWN ON THE CONTROLLER CHART MATCHES THE NUMBER ON THE ACTUAL CONTROL VALVE IDENTIFICATION TAG. NUMBERING OF ZONES SHALL BE PER APPROVED PLANS. WHEN COMPLETED AND APPROVED, HERMETICALLY SEAL (LAMINATE) THE CHART BETWEEN TWO PIECES OF PLASTIC. THE CHARTS SHALL BE COMPLETED BEFORE THE PROJECT CAN BE CONSIDERED PHYSICALLY COMPLETE.

5. IRRIGATION SYSTEM WARRANTY AND WINTERIZATION – THE CONTRACTOR SHALL PROVIDE A ONE YEAR IRRIGATION WARRANTY AND BE RESPONSIBLE FOR ALL WORK SHOWING DEFECTS IN MATERIALS OR WORKMANSHIP, FOR A PERIOD OF ONE YEAR FROM DATE OF PHYSICAL COMPLETION OR ONE YEAR FROM DATE OF DE–WINTERIZATION, WHICHEVER IS LATEST. THE WARRANTY SHALL INCLUDE TRENCH RESTORATION OF PLANTED OR PAVED AREAS DUE TO SETTLEMENT AND RESETTING VALVE BOXES. RESTORATION SHALL OCCUR WITHIN TWO WEEKS OF NOTIFICATION. A FINAL SITE MEETING SCHEDULED BY THE CONTRACTOR WITH THE ENGINEER SHALL TAKE PLACE 11 MONTHS AFTER THE DATE OF SUBSTANTIAL COMPLETION OR DE–WINTERIZATION, WHICHEVER IS LATER. THE SYSTEM SHALL BE EXAMINED BY THE ENGINEER TO DETERMINE IF THE SYSTEM REQUIRES ALTERATIONS OR REPLACEMENTS.

    THE WARRANTY SHALL INCLUDE ONE COMPLETE WINTERIZATION AND ONE COMPLETE DE–WINTERIZATION OF THE IRRIGATION SYSTEM IN THE PRESENCE OF THE ENGINEER, OR OTHER DESIGNATED CITY STAFF.

CITY OF KIRKLAND
DEPARTMENT OF PUBLIC WORKS
123 FIFTH AVENUE KIRKLAND, WA 98033
(425) 587-3800 www.kirklandwa.gov

NO.	DATE	BY	APPR.	REVISION
0	2019/12/06	DD	BM	ISSUE FOR BID

STATE OF WASHINGTON BRADLEY MARK SWAN LICENSED LANDSCAPE ARCHITECT NO. 1254 EXP. 11/30/2021 12/6/19

COWI MIG SvR

BM	2019/12/06	DESIGNED BY: DATE
DD	2019/12/06	DRAWN BY: DATE
MRS	2019/12/06	CHECKED BY: DATE

CITY OF KIRKLAND
TOTEM LAKE PEDESTRIAN BRIDGE

IRRIGATION NOTES 2

SHEET: TLC – L –210B
SCALE: AS SHOWN
FILENAME: TLPB_210_IRRIGATION.dwg

File: G:\15c\15094c TLPB\Current\TLPB_210_IRRIGATION.dwg Save Date: Dec 06, 2019 8:56 AM Saved By: JENNIFERA

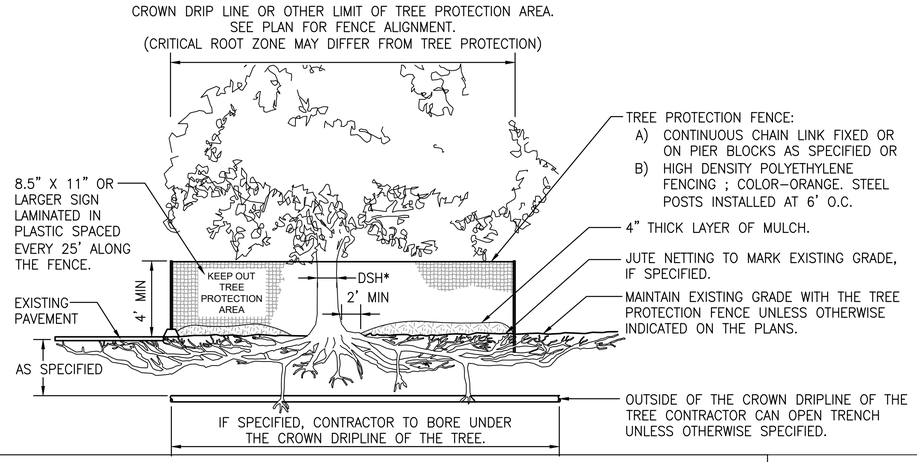

NOTES:

1. SEE GENERAL NOTES AND SPECIFICATIONS FOR ADDITIONAL TREE PROTECTION REQUIREMENTS.
2. SEE SPECIFICATIONS FOR WATERING REQUIREMENTS.
3. ALL PRUNING SHALL BE PERFORMED BY APPROVED ISA CERTIFIED ARBORIST.
4. NO EQUIPMENT SHALL OPERATE INSIDE THE PROTECTIVE ZONE FENCE AREA INCLUDING DURING FENCE INSTALLATION AND REMOVAL.
5. EQUIPMENT, TEMPORARY BUILDINGS, OR STORAGE SHALL NOT OCCUR WITHIN 10' OF TREE PROTECTION FENCE OR WITHIN SPECIFIED CRITICAL ROOT ZONE.
6. SEE SITE AND CIVIL PLANS FOR ANY MODIFICATIONS WITHIN THE TREE PROTECTION AREA.
7. DSH* – DIAMETER OF TRUNK AT STANDARD HEIGHT.

NTS

Tree Protection and Protection Fencing Detail 1

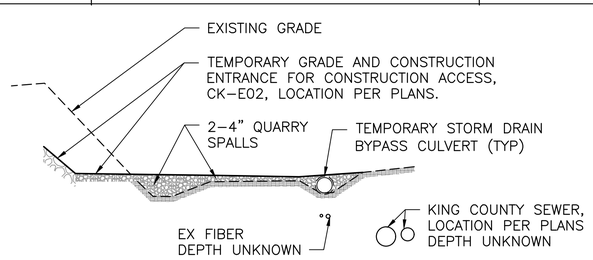

SECTION A – TEMPORARY LAYDOWN AND CONSTRUCTION ACCESS

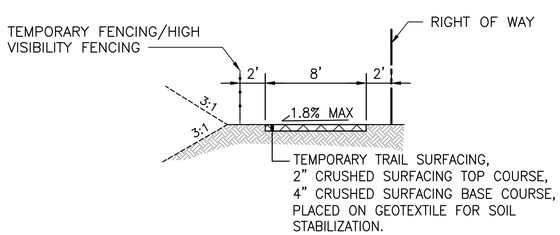

SECTION B – TEMPORARY TRAIL

NOTES: DEPTHS ARE COMPACTED DEPTHS.

NTS

Typical Section for Construction Access and Temporary Trail 3

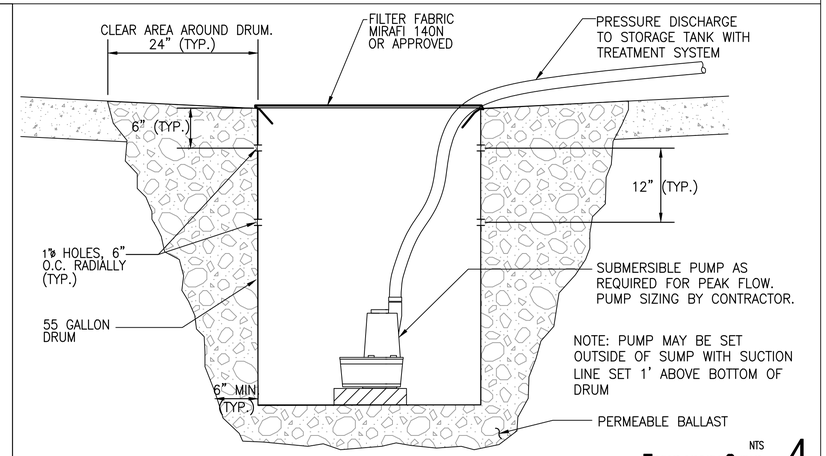

NTS

Temporary Sump 4

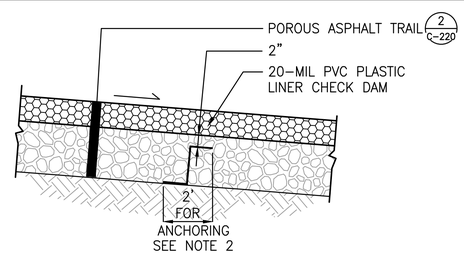

NOTE:
1. TOP OF PC CHECK DAM LINER IS SAME ACROSS LENGTH OF CHECK DAM.
2. EXTEND LINER AS NEEDED TO SECURE IN PLACE.
3. INSTALL CHECK DAMS 11' ON CENTER BETWEEN STATIONS 12+00 AND 14+85 AND STATIONS 23+00 AND 24+00. SEE PLANS FOR LOCATIONS OF CHECK DAM IN OTHER LOCATIONS

NTS

Porous Asphalt Check Dams 6

LAST REVISED:07/2017

NOTE:
CLOUDED ITEMS ARE MODIFICATIONS TO CITY STANDARD DETAIL CK–L.08

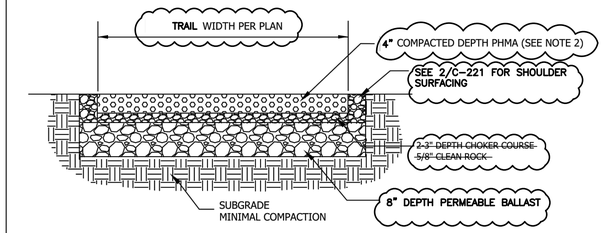

POROUS ASPHALT SECTION

NOT TO SCALE

NOTES:

1. SEE DRIVEWAY STANDARD PLANS CK-R.21 FOR JOINTING AND LAYOUT.
2. POROUS HOT MIX ASPHALT (PHMA) SHALL CONFORM TO ALL REQUIREMENTS BELOW:
   - PHMA PG 70-22 WITH MAXIMUM AGGREGATE OF 1/2"
   - ASPHALT CEMENT CONTENT 6% MINIMUM BY WEIGHT OF AGGREGATE
   - CONTAINING LESS THAN 3% FINES
3. ~~AGGREGATE FOR BASE COURSE SHALL BE CLEAN, ANGULAR DRAIN ROCK WITH ONLY 2% PASSING THE #100 SIEVE AND 5% PASSING THE #4 SIEVE; PERMEABLE BALLAST WSDOT 9-03.9(2).~~ **PERMEABLE BALLAST PER SPECIAL PROVISIONS.**
4. POROUS ASPHALT SHALL NOT BE POURED IN ADVERSE WEATHER CONDITIONS. SEE POLICY R-8, PLACING CONCRETE OR ASPHALT IN ADVERSE WEATHER CONDITIONS.
5. POROUS DRIVEWAY TO BE INSTALLED AFTER CONSTRUCTION OF HOUSE. AFTER INSTALLATION, PROTECT POROUS ASPHALT FROM LANDSCAPE AND OTHER CONSTRUCTION ACTIVITIES.
6. SUBGRADE IS TO BE COMPACTED TO THE MINIMUM NECESSARY FOR STRUCTURAL STABILITY, USING DUAL WHEEL SMALL MECHANICAL ROLLERS IN STATIC MODE. HEAVY EQUIPMENT OR TRUCK TRAFFIC IS NOT ALLOWED ON SUBGRADE. SCARIFY TOP 1/4" OF SURFACE PRIOR TO PLACEMENT OF GEOTEXTILE.
7. TO PREVENT COMPACTION, INSTALL THE AGGREGATE BASE IN THE FOLLOWING MANNER (BACK-DUMPING):
   -DUMP AGGREGATE BASE ONTO SUBGRADE FROM THE EDGE OF THE INSTALLATION, THEN PUSH IT OUT ONTO THE SUBGRADE.
   -DUMP SUBSEQUENT LOADS FROM ON TOP OF THE AGREGATE BASE AS THE INSTALLATION PROGRESSES.
8. POROUS ASPHALT IS TO BE TESTED PRIOR TO ACCEPTANCE. FOR DRIVEWAYS, THE TEST SHALL CONSIST OF DUMPING A 5 GALLON BUCKET OF WATER ONTO THE DRIVEWAY SURFACE. IF ANYTHING OTHER THAN A SCANT AMOUNT PUDDLES OR RUNS OFF THE SURFACE, ADDITIONAL TESTING IS NECESSARY PRIOR TO ACCEPTANCE.
9. SLOPE SHALL NOT EXCEED 5% FOR POROUS ASPHALT.
10. POROUS ASPHALT SHALL NOT CONTAIN MOTTLING OR SURFACE RAVELING.
11. NO HORIZONTAL GEOTEXTILE FABRIC UNLESS RECOMMENDED BY GEOTECHNICAL PROFESSIONAL DUE TO POOR SOIL STRENGTH. VERTICAL SEPARATION WITH GEOTECHNICAL FABRIC MAY BE REQUIRED PER ENGINEER DEPENDENT ON ADJACENT STRUCTURES.
12. **REFER TO 6/C–220 FOR POROUS ASPHALT CHECK DAMS**

CITY OF KIRKLAND
PLAN NO. CK– L.08
POROUS ASPHALT DETAIL

NTS

Porous Asphalt Trail 2

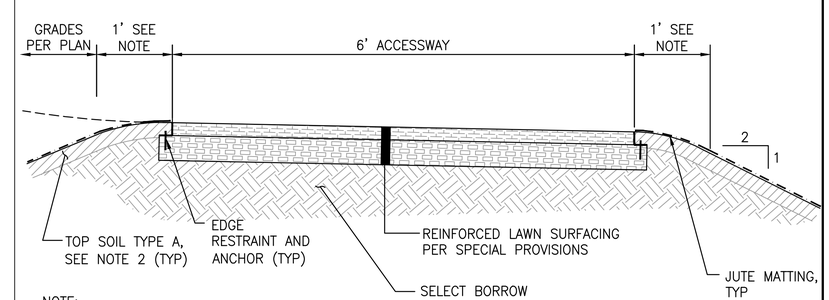

NOTE:
1. ALLOW 1–FOOT SHOULDER FOR GRADING TRANSITION TO ADJACENT SLOPE.
2. SEE SPECIAL PROVISIONS FOR SOIL DEPTH AND SUBGRADE PREPARATION.

NTS

Reinforced Lawn Surfacing For Accessway 7

Know what's below. Call before you dig.

CITY OF KIRKLAND
DEPARTMENT OF PUBLIC WORKS
123 FIFTH AVENUE KIRKLAND, WA 98033
(425) 587-3800 www.kirklandwa.gov

NO.	DATE	BY	APPR.	REVISION
0	2019/12/06	NP	DR	PERMIT UPDATES

NATHAN ALAN POLANSKI — STATE OF WASHINGTON — 48880 — REGISTERED PROFESSIONAL ENGINEER — 12-5-19

COWI
MIG | SvR

DR 2019/12/06 — DESIGNED BY: DATE
JA 2019/12/06 — DRAWN BY: DATE
KG 2019/12/06 — CHECKED BY: DATE

CITY OF KIRKLAND
TOTEM LAKE PEDESTRIAN BRIDGE

CIVIL DETAILS 1

SHEET: TLC – C –220
SCALE: AS SHOWN
FILENAME: TLPB_220_CIVIL DETAILS.dwg

File: G:\15c\15094c TLPB\Current\TLPB_220_CIVIL DETAILS.dwg Save Date: Dec 06, 2019 9:29 AM Saved By: JENNIFERA

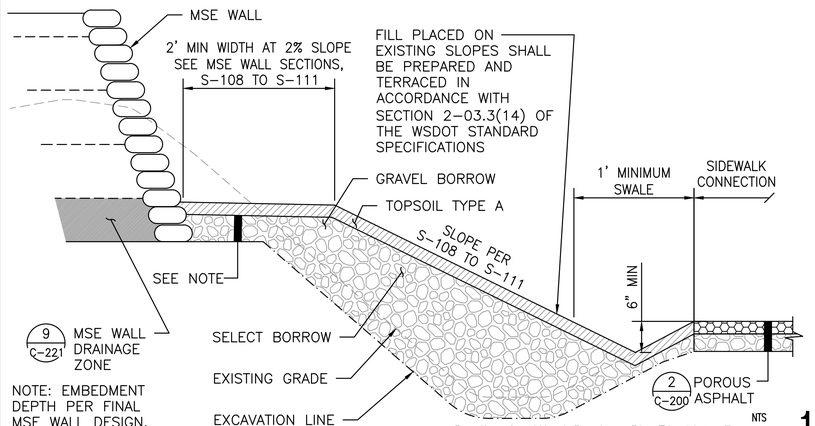

NTS

Section for West Swale - Sta 53+28 to 55+00 1

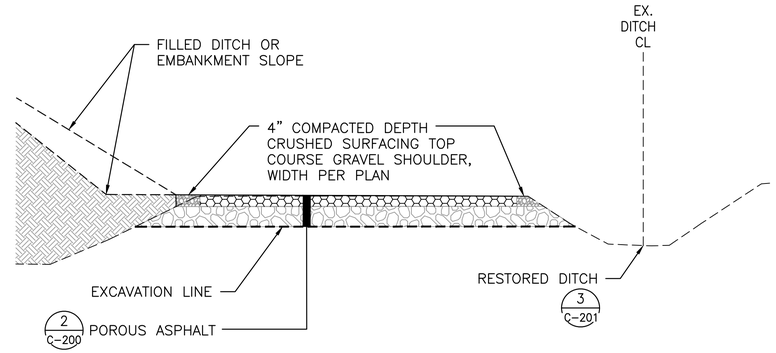

NTS

Trail Section 2

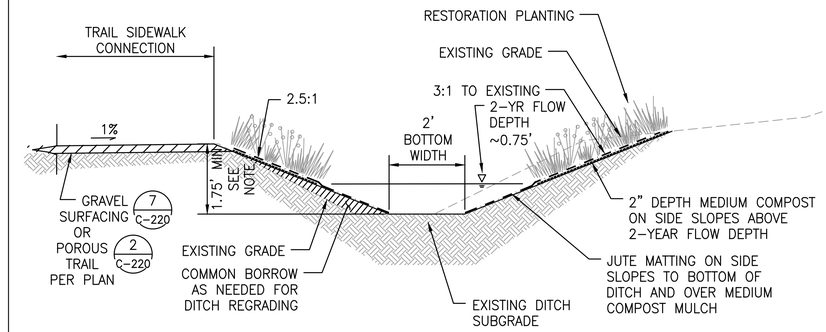

NOTE: MINIMUM DEPTH TO ALLOW FOR CONVEYANCE OF 100-YEAR FLOW WITH 5" FREEBOARD AND 25-YEAR FLOW WITH 6" MINIMUM FREEBOARD

NTS

Typical Section at Restored East Ditch 3

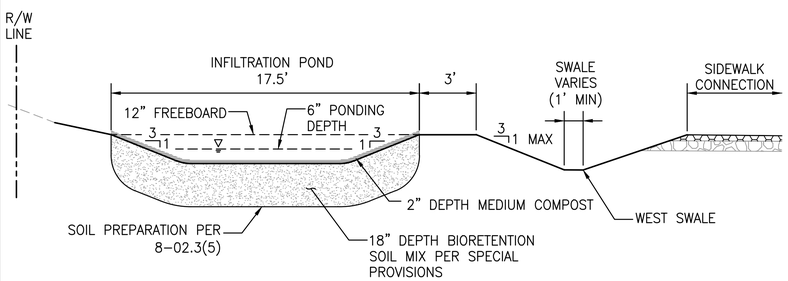

NTS

Infiltration Pond and West Swale From Sta 55+00 to End of Pond 4

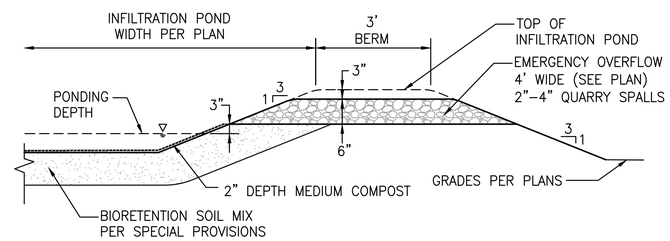

NTS

Infiltration Pond Emergency Overflow 5

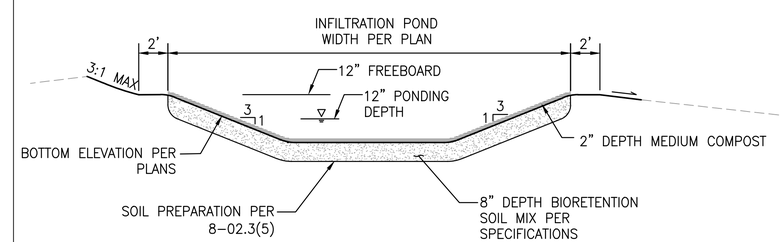

NTS

Infiltration Pond in Traffic Island 6

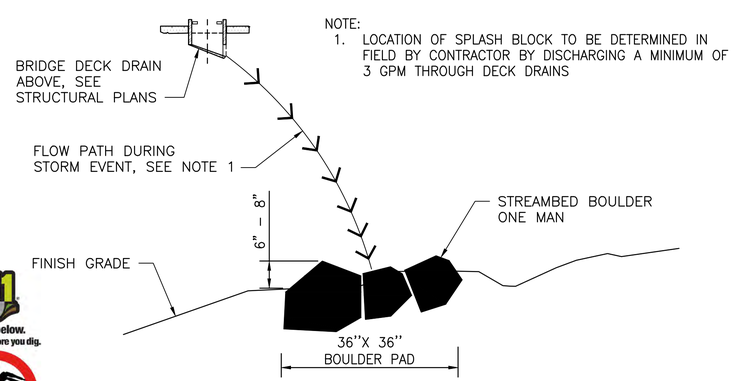

NOTE:
1. LOCATION OF SPLASH BLOCK TO BE DETERMINED IN FIELD BY CONTRACTOR BY DISCHARGING A MINIMUM OF 3 GPM THROUGH DECK DRAINS

NTS

Splash Block 7

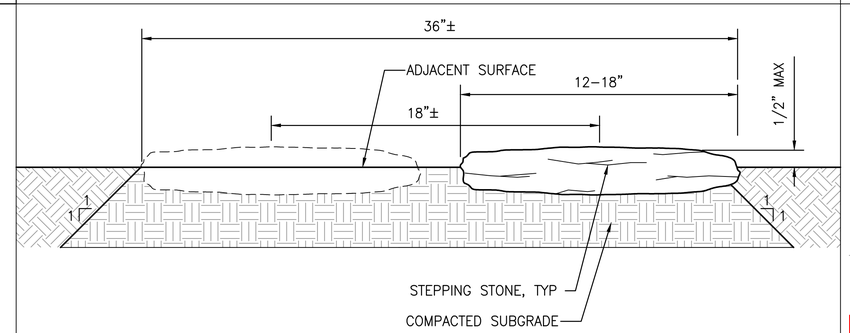

NOTES:
1. ADJUST PLACEMENT OF STONE SO THAT STEPPING SURFACE IS LEVEL.
2. PLACE STONES 4' ON CENTER IN EACH ROW.

NTS

Stepping Stone 8

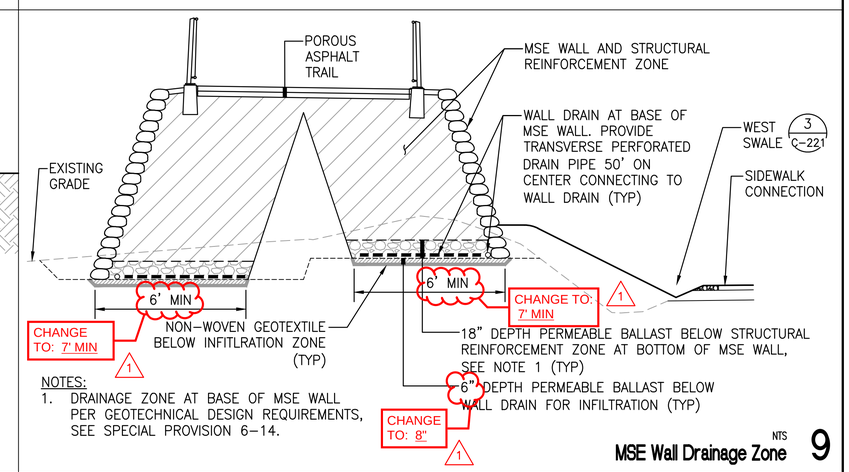

NOTES:
1. DRAINAGE ZONE AT BASE OF MSE WALL PER GEOTECHNICAL DESIGN REQUIREMENTS, SEE SPECIAL PROVISION 6-14.

NTS

MSE Wall Drainage Zone 9

811 Know what's below. Call before you dig.

CITY OF KIRKLAND
DEPARTMENT OF PUBLIC WORKS
123 FIFTH AVENUE KIRKLAND, WA 98033
(425) 587-3800 www.kirklandwa.gov

NO.	DATE	BY	APPR.	REVISION
1	2020/03/09	NP	DR	ADDENDUM 3
0	2019/12/06	NP	DR	ISSUE FOR BID

NATHAN ALAN POLANSKI — STATE OF WASHINGTON — 38860 — REGISTERED PROFESSIONAL ENGINEER — 12-5-19

COWI

MIG | SvR

DR	2019/12/06	DESIGNED BY: DATE
JA	2019/12/06	DRAWN BY: DATE
KG	2019/12/06	CHECKED BY: DATE

CITY OF KIRKLAND
TOTEM LAKE PEDESTRIAN BRIDGE

CIVIL DETAILS 2

SHEET: TLC – C –221
SCALE: AS SHOWN
FILENAME: TLPB_220_CIVIL DETAILS.dwg

File: G:\15c\15094c TLPB\Current\TLPB_220_CIVIL DETAILS.dwg Save Date: Dec 06, 2019 9:29 AM Saved By: JENNIFERA

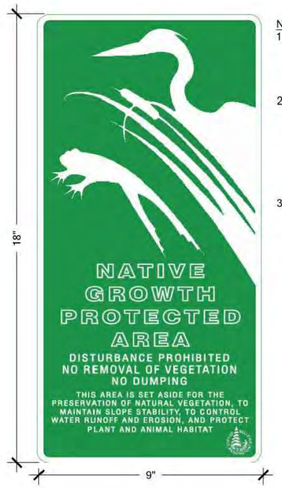

NOTES:
1. SIGNAGE TO APPEAR LIKE IMAGE AND SIZES NOTED ON THE LEFT WITH A GREEN BACKGROUND.
2. SIGN TO BE FABRICATED IN ALUMINUM, BY A CITY APPROVED VENDOR, SUCH AS REDMOND SIGNS, (425) 883-9944 OR EQUIVALENT MANUFACTURER.
3. SIGNAGE TO BE PLACED ON FENCING WHERE NOTED ON THE PLANS AND PER SPECIFICATIONS.

NTS
Critical Area Sign 1

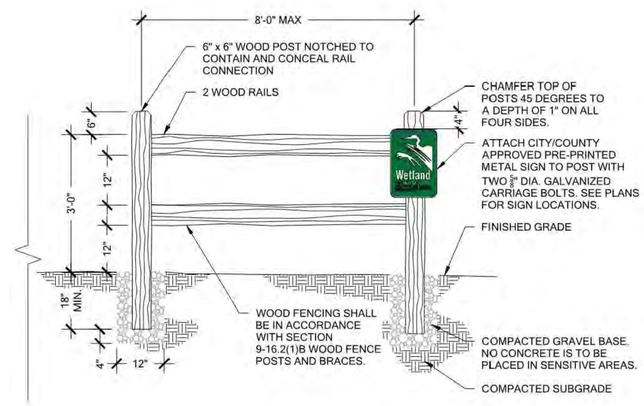

NOTES:
1. CENTER OF POST SHALL BE LOCATED 6" FROM THE EDGE OF SHOULDER (OR EDGE OF PATH WHEN NO SHOULDER IS PROVIDED) UNLESS SHOWN OTHERWISE IN PLANS.
2. SEE DETAIL 3, SHEET C–222 FOR POST SPACING AND MODIFICATION TO RAILS AT ACCESS PATH (STA 23+98 LT)

NTS
Split Rail Fencing With Critical Area Signs 2

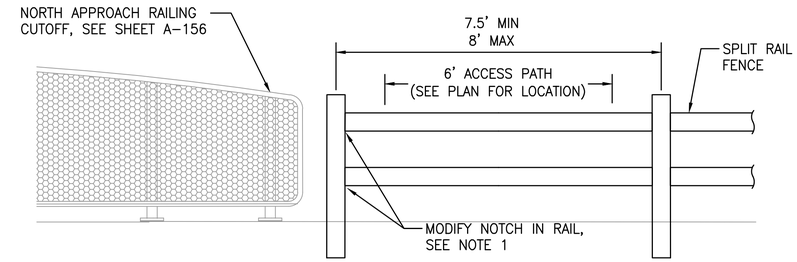

NOTE: COORDINATE WITH ENGINEER TO PROVIDE MODIFICATION TO NOTCH IN RAILS AT ACCESS PATH TO ALLOW RAILS TO BE TEMPORARILY REMOVED FOR MAINTENANCE ACCESS.

NTS
Split Rail Fence at Sta 23+98 3

NTS
Not Used 4

NTS
Not Used 5

NTS
Not Used 6

NTS
Not Used 7

CITY OF KIRKLAND
DEPARTMENT OF PUBLIC WORKS
123 FIFTH AVENUE KIRKLAND, WA 98033
(425) 587-3800 www.kirklandwa.gov

NO.	DATE	BY	APPR.	REVISION
0	2019/12/06	NP	DR	ISSUE FOR BID

NATHAN ALAN POLANSKI, STATE OF WASHINGTON, REGISTERED PROFESSIONAL ENGINEER, 12-5-19

COWI
MIG | SvR

DR 2019/12/06
DESIGNED BY: DATE
JA 2019/12/06
DRAWN BY: DATE
KG 2019/12/06
CHECKED BY: DATE

CITY OF KIRKLAND
TOTEM LAKE PEDESTRIAN BRIDGE

CIVIL DETAILS 3

SHEET: TLC – C –222
SCALE: AS SHOWN
FILENAME: TLPB_220_CIVIL DETAILS.dwg

File: G:\15c\15094c TLPB\Current\TLPB_220_CIVIL DETAILS.dwg Save Date: Dec 06, 2019 9:29 AM Saved By: JENNIFERA

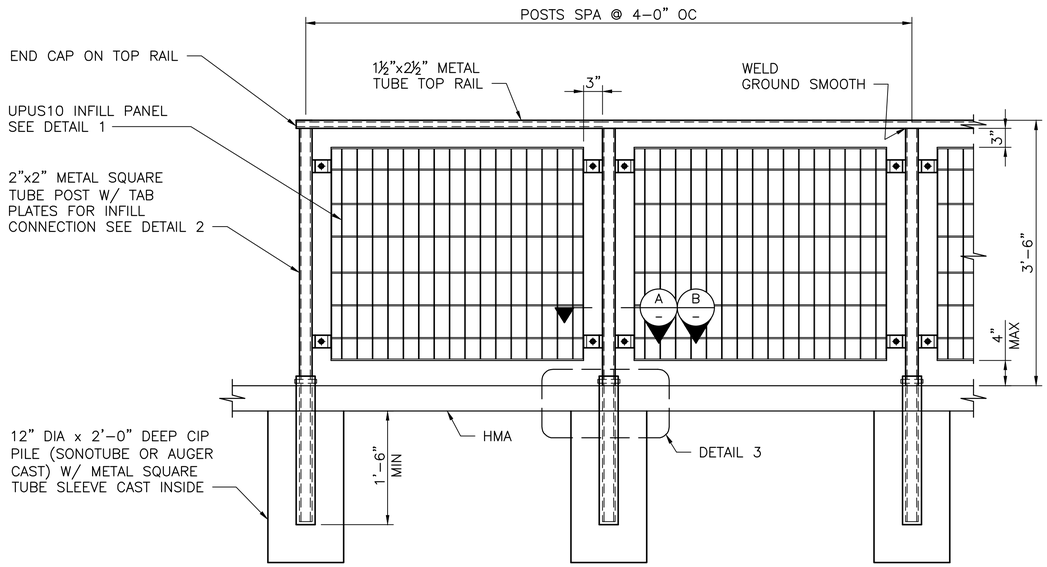

SIDEWALK GUARDRAIL DETAIL

SCALE: 1" = 1'–0"

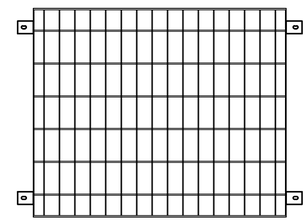

INFILL PANEL DETAIL (1)

SCALE: 1" = 1'–0"

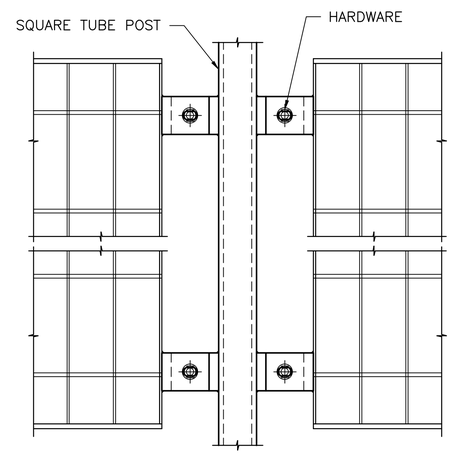

POST DETAIL (2)

SCALE: 3" = 1'–0"

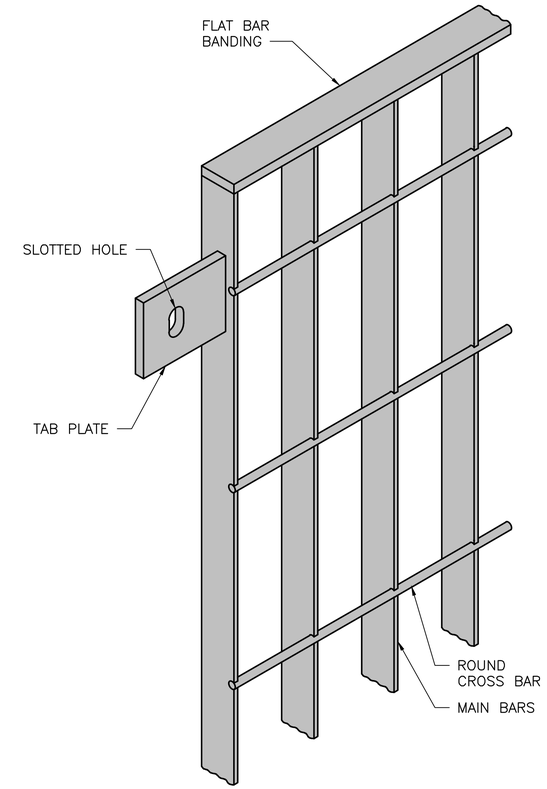

OPUS 10 INFILL PANEL

OPUS10
INFILL PANEL
10-V-ST-D

Presented By Grating Pacific
Southern California 800.521.4314
Northern California 800.491.7999
Washington 800.243.3939
Oregon 800.942.4041
Arizona 888.956.9201
www.CodaArchitectural.com

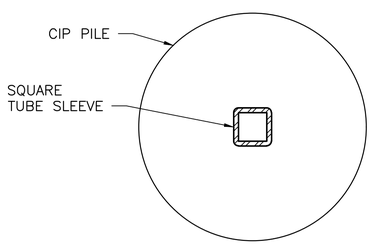

FOUNDATION PLAN

SCALE: 6" = 1'–0"

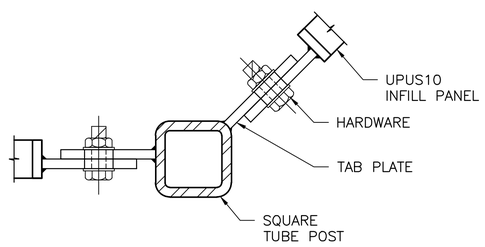

SECTION (A)

SCALE: 6" = 1'–0"
(AT TOTEM LAKE BLVD)

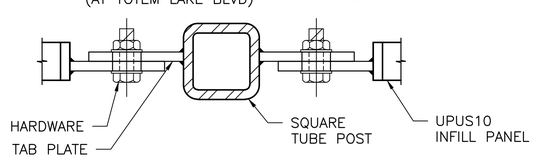

SECTION (B)

SCALE: 6" = 1'–0"
(AT NE 124TH ST)

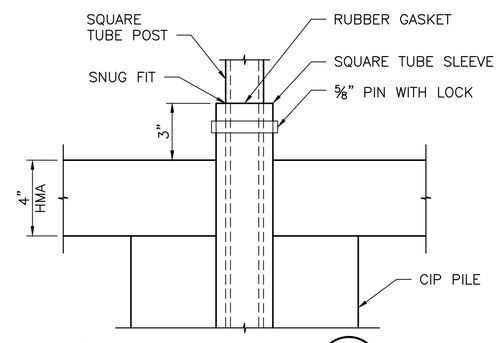

DETAIL (3)

SCALE: 3" = 1'–0"

NOTES:

1. SIDEWALK GUARDRAIL SHALL BE FABRICATED AND INSTALLED IN ACCORDANCE WITH MANUFACTURER SPECIFICATIONS. SEE SPECIAL PROVISIONS.
2. CIP PILE SHALL USE CONCRETE CLASS 3000.

CITY OF KIRKLAND
DEPARTMENT OF PUBLIC WORKS
123 FIFTH AVENUE KIRKLAND, WA 98033
(425) 587-3800 www.kirklandwa.gov

NO.	DATE	BY	APPR.	REVISION
0	2019/12/06	CHJS	MWBM	ISSUE FOR BID

MATTHEW D. BAUGHMAN — STATE OF WASHINGTON — 2019 DEC 06 — PROFESSIONAL ENGINEER

COWI

MWBM	2019/12/06
DESIGNED BY:	DATE
CHJS	2019/12/06
DRAWN BY:	DATE
ASIL	2019/12/06
CHECKED BY:	DATE

CITY OF KIRKLAND
TOTEM LAKE CONNECTION

SIDEWALK GUARDRAIL DETAILS

SHEET: TLC–S–223
SCALE: AS SHOWN
FILENAME: A088367–S–223.dwg

File: D:\projectwise\cow\d0301252\A088367–S–223.dwg Save Date: Nov 27, 2019 8:53 AM Saved By: CHJS

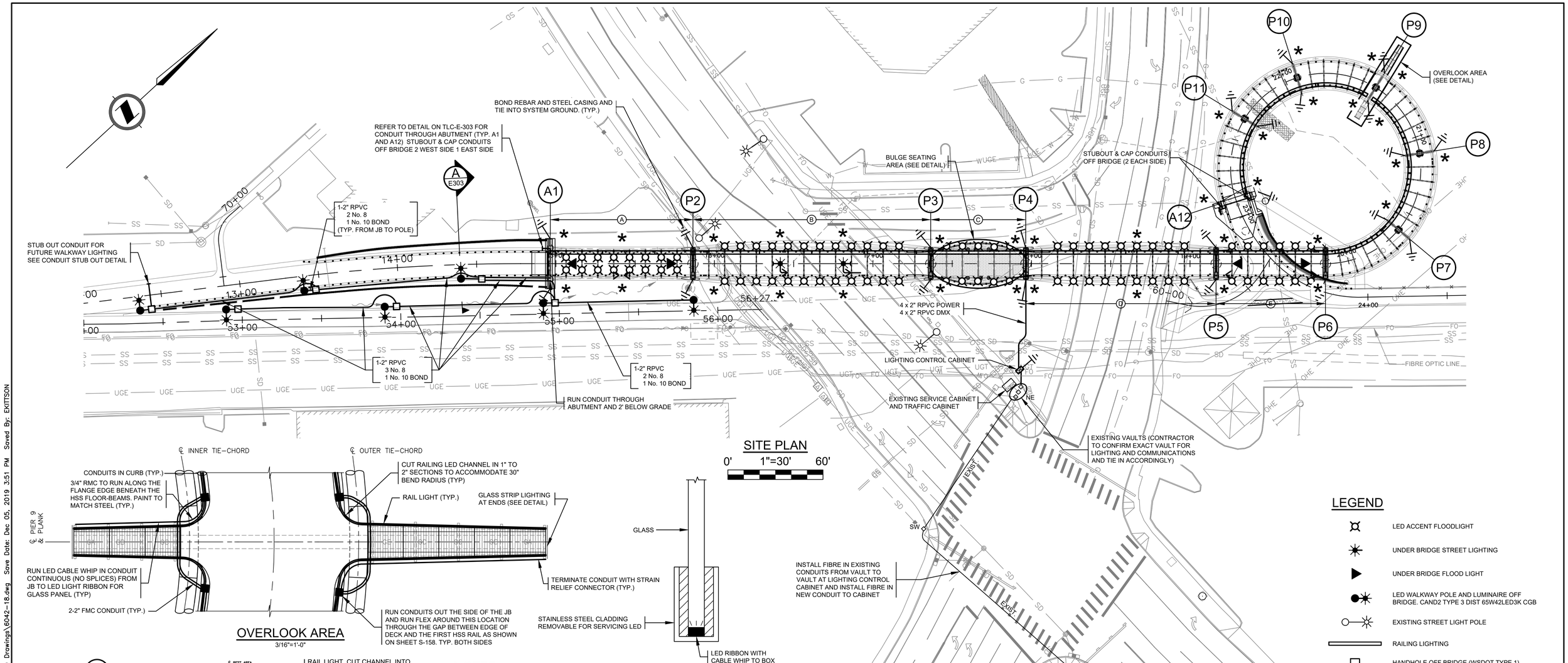

OVERLOOK AREA

3/16"=1'-0"

GLASS STRIP LIGHTING

N.T.S.

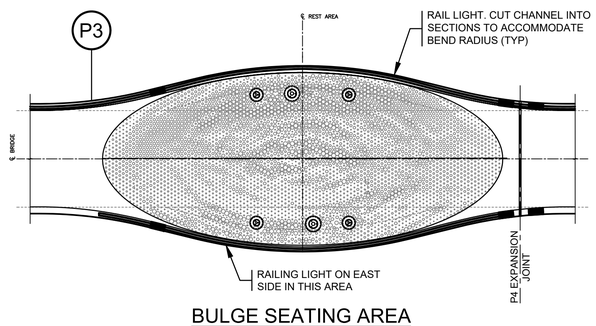

BULGE SEATING AREA

3/32"=1'-0"

NOTES:

1. REFER TO CONTRACT SPECIFICATIONS FOR FURTHER DETAILS.
2. PRIOR TO CONSTRUCTION THE CONTRACTOR SHALL OBTAIN AND PAY FOR ALL PERMITS RELATING TO THE WORK IN THIS CONTRACT, CONTACT THE VARIOUS AGENCIES INVOLVED RELATING TO THE ELECTRICAL WORK AND INCLUDE ALL INSPECTION AND OTHER FEES IN THE CONTRACT.
3. THE CONTRACTOR SHALL UNDERTAKE ALL WORK IN STRICT ACCORDANCE WITH THE NATIONAL ELECTRICAL CODE AND ANY WASHINGTON STATE WAC 296-45, "SAFETY STANDARDS FOR ELECTRICAL WORKERS" AND WAC 296-46, "LAWS, RULES & REGULATIONS FOR INSTALLING WIRES & EQUIPMENT".
4. ALL WORK SHALL BE PERFORMED AND SUPERVISED BY A REGISTERED ELECTRICAL CONTRACTOR.
5. REFER TO SPECIFICATIONS FOR PRODUCT REQUIREMENTS
6. CONTRACTOR SHALL PROVIDE O&M MANUALS IN PDF FORMAT.
7. ALL CAST IN PLACE AND SURFACE MOUNT CONDUITS SHALL BE GALVANZIED RIGID METAL CONDUIT (RMC).
8. CONFIRM EQUIPMENT COLOURS WITH CITY/ARCHITECT PRIOR TO ORDERING
9. USE OF DISSIMILAR METALS WHEN IN CONTACT WITH EACH OTHER IS NOT ALLOWED.
10. BOND ALL EXPOSED METAL (HANDRAILS & PLATFORMS) TO GROUND SYSTEM. GROUND WIRE SHALL BE MIN. No. 2 COPPER. USE UL LISTED GROUND CONNECTORS
11. ALL FLEX CONDUIT AND CABLE CONNECTORS SHALL BE STAINLESS STEEL (T&B TYPE) WITH GROUND LOCK NUT

LEGEND

- LED ACCENT FLOODLIGHT
- UNDER BRIDGE STREET LIGHTING
- UNDER BRIDGE FLOOD LIGHT
- LED WALKWAY POLE AND LUMINAIRE OFF BRIDGE. CAND2 TYPE 3 DIST 65W42LED3K CGB
- EXISTING STREET LIGHT POLE
- RAILING LIGHTING
- HANDHOLE OFF BRIDGE (WSDOT TYPE 1)
- JUNCTION BOX IN CURB
- UNDERGROUND CONDUIT AND CONDUCTORS OFF BRIDGE
- APPROXIMATE JB LOCATION IN CURB
- GROUND CONNECTION (TO STEEL PILES AT P2 TO P11 AND 3/4" X 10' GROUND RODS AT A1 AND A12)

CITY OF KIRKLAND
DEPARTMENT OF PUBLIC WORKS
123 FIFTH AVENUE KIRKLAND, WA 98033
(425) 587-3800 www.kirklandwa.gov

NO.	DATE	BY	APPR.	REVISION
0	2019/12/06	RF	MGDS	ISSUE FOR BID

COWI
DMD & Associates Ltd.
www.dmdeng.com
office@dmdeng.com

6042-18-1 OF 5

DON McLEAN 2019/12/06
DESIGNED BY: DATE
ROB FRASER 2019/12/06
DRAWN BY: DATE
DANIEL J. WONG 2019/12/06
CHECKED BY: DATE

CITY OF KIRKLAND
TOTEM LAKE CONNECTION

LIGHTING SITE PLAN

SHEET: TLC-E-300
SCALE: AS NOTED
FILENAME: 6042-18.dwg

File: P:\Projects\(Jobs 6000-6099)\6042-18 (ST - Totem Lake Bridge, Kirkland, WA)\CAD Drawings\6042-18.dwg Save Date: Dec 05, 2019 3:51 PM Saved By: EKITSON

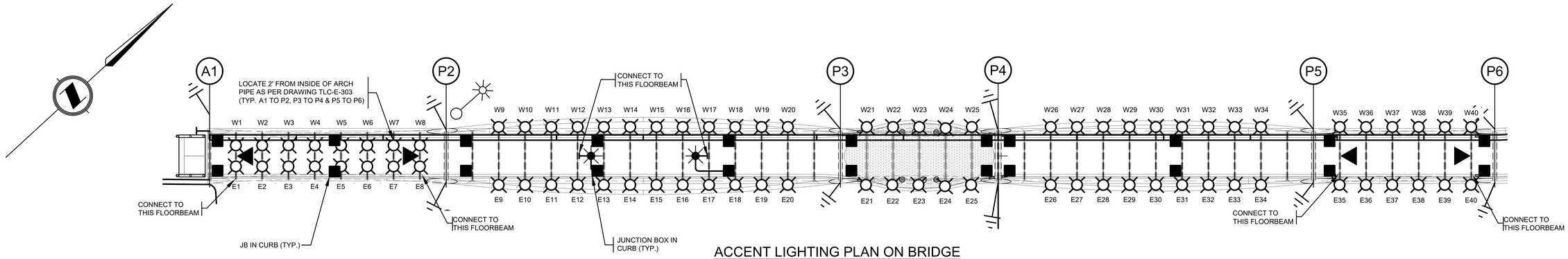

ACCENT LIGHTING PLAN ON BRIDGE

0' 1"=20' 40'

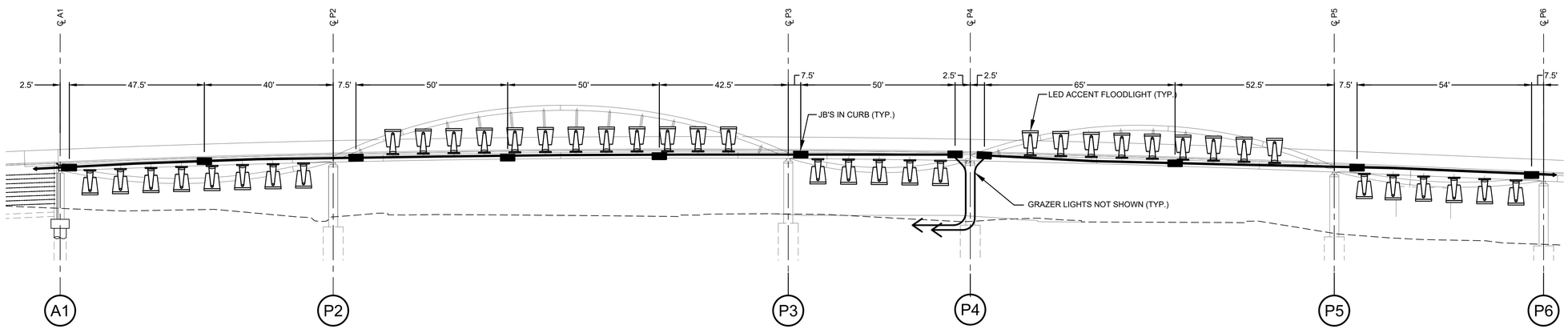

ACCENT LIGHTING ELEVATION ON BRIDGE

0' 1"=20' 40'

REFER TO TLC-E-300 FOR NOTES AND LEGEND

LIGHTING LOAD

SEE NOTE 1	BREAKER A					BREAKER B	
	HAND RAIL LIGHTING	GLASS STRIP LIGHTING	WALKWAY LIGHTING (OFF BRIDGE)	UNDER BRIDGE STREET LIGHTING	UNDER BRIDGE FLOOD LIGHTING	ACCENT FLOOD LIGHTING	GRAZER LIGHTING
WATT	1.4 W / ft	8	65	50	23	33	60
QUANTITY	894'	2	7	2	4	80	10
TOTAL POWER (WATT)	1252	16	455	100	92	2640	600

NOTE:
CONTRACTOR TO ENSURE ALL LOADS ARE BALANCED

NOTES:

1. WEST SIDE
   302' FROM A1 TO P4
   339' FROM P4 TO TIP OF INSIDE OVERLOOK AT P9
   142' FROM TIP OF INSIDE OVERLOOK AT P9 TO A12
   EAST SIDE
   61' FROM P3 TO P4
   50' BOTH SIDES OF P9 OVERLOOK
   894'

CITY OF KIRKLAND
DEPARTMENT OF PUBLIC WORKS
123 FIFTH AVENUE KIRKLAND, WA 98033
(425) 587-3800 www.kirklandwa.gov

NO.	DATE	BY	APPR.	REVISION
0	2019/12/06	RF	MGDS	ISSUE FOR BID

DANIEL J. WONG STATE OF WASHINGTON 40393 REGISTERED PROFESSIONAL ENGINEER EXPIRES 5/24/2019

COWI
DMD & Associates Ltd.
www.dmdeng.com
office@dmdeng.com

6042-18-2 OF 5

DON McLEAN	2019/12/06	DESIGNED BY: DATE
ROB FRASER	2019/12/06	DRAWN BY: DATE
DANIEL J. WONG	2019/12/06	CHECKED BY: DATE

CITY OF KIRKLAND
TOTEM LAKE CONNECTION

ACCENT LIGHTING DETAILS 1

SHEET: TLC-E-301
SCALE: 1"=20'
FILENAME: 6042-18.dwg

File: P:\Projects\(Jobs 6000-6099)\6042-18 (ST - Totem Lake Bridge, Kirkland, WA)\CAD Drawings\6042-18.dwg Save Date: Dec 05, 2019 3:51 PM Saved By: EKITSON

REFER TO TLC-E-300 FOR NOTES AND LEGEND

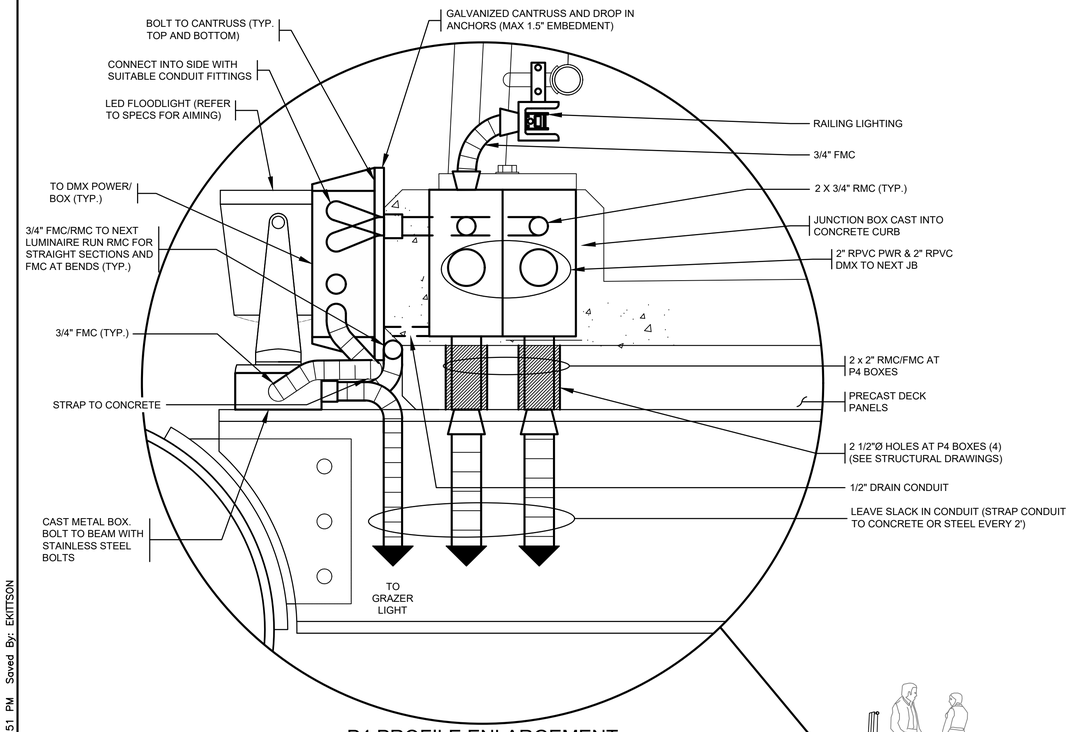

P4 PROFILE ENLARGEMENT

3"=1'0"

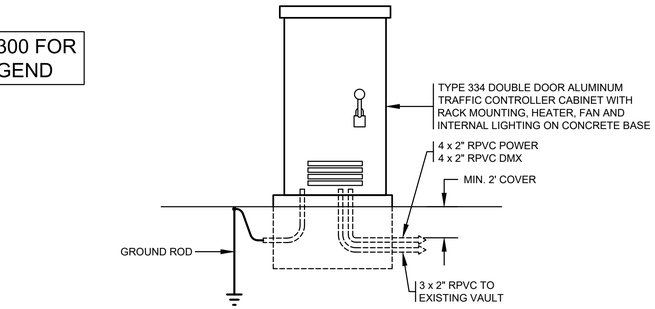

LIGHTING CONTROL CABINET

N.T.S.

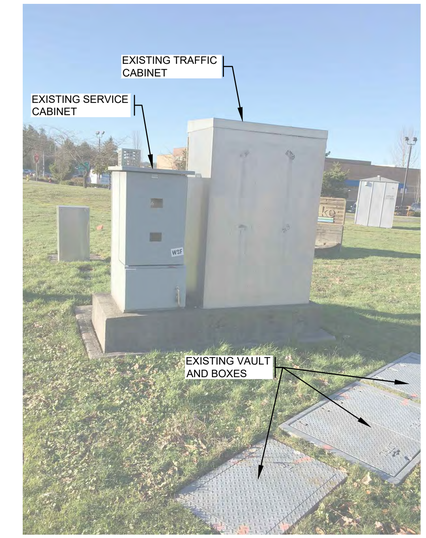

EXISTING SERVICE CABINET

NTS

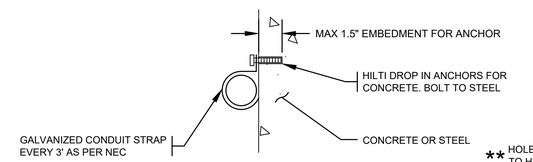

CONDUIT ATTACHMENT TO CONCRETE OR STEEL

N.T.S.

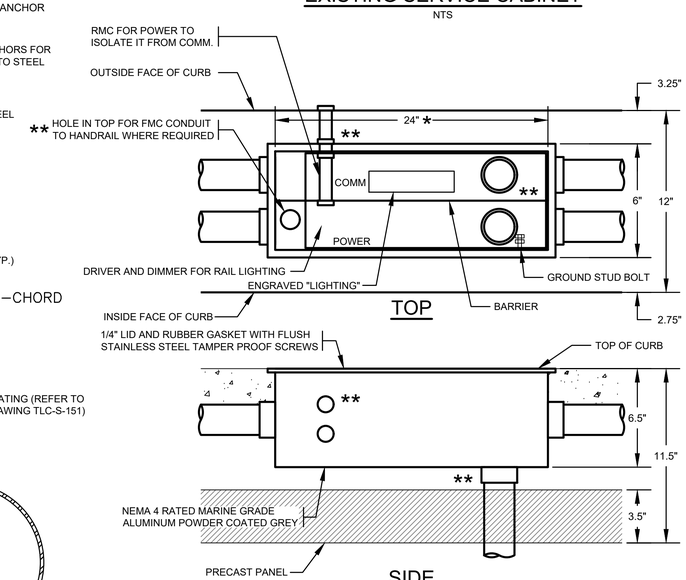

JUNCTION BOX DETAIL (CAST INTO CURB)

N.T.S.

* JUNCTION BOXES AT P9 ON INSIDE OF CURVE SHALL BE 18" TO ACCOMODATE HANDRAIL POSTS

** CAP ALL CONDUITS AND HOLES NOT USED

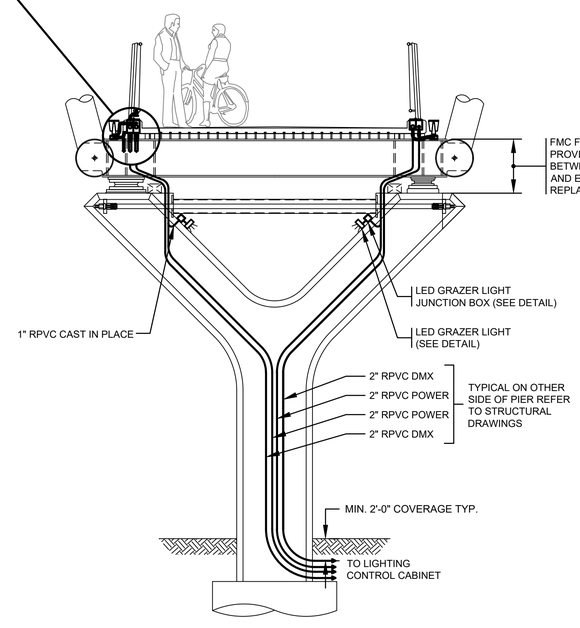

P4 DETAIL

1/4"=1'0"

DMX/POWER BOX MOUNTING

N.T.S.

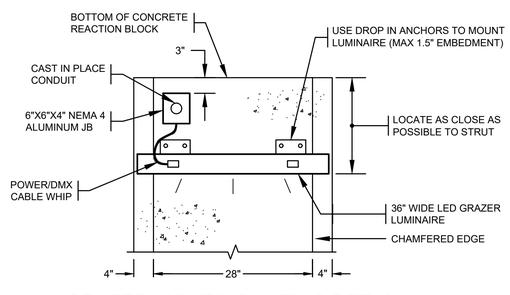

GRAZER LIGHT MOUNTING DETAIL

(AT P2 TO P6)

N.T.S.

CITY OF KIRKLAND
DEPARTMENT OF PUBLIC WORKS
123 FIFTH AVENUE KIRKLAND, WA 98033
(425) 587-3800 www.kirklandwa.gov

NO.	DATE	BY	APPR.	REVISION
0	2019/12/06	RF	MGDS	ISSUE FOR BID

DANIEL J. WONG — STATE OF WASHINGTON — 40089 — REGISTERED PROFESSIONAL ENGINEER — EXPIRES 2020

COWI

DMD & Associates Ltd.
www.dmdeng.com
office@dmdeng.com

6042-18-3 OF 5

DON McLEAN 2019/12/06
DESIGNED BY: DATE

ROB FRASER 2019/12/06
DRAWN BY: DATE

DANIEL J. WONG 2019/12/06
CHECKED BY: DATE

CITY OF KIRKLAND
TOTEM LAKE CONNECTION

ACCENT LIGHTING DETAILS 2

SHEET: TLC-E-302

SCALE: AS NOTED

FILENAME: 6042-18.dwg

File: P:\Projects\(Jobs 6000-6099)\6042-18 (GT - Totem Lake Bridge, Kirkland, WA)\CAD Drawings\6042-18.dwg Save Date: Dec 05, 2019 3:51 PM Saved By: EKITSON

NOTES:

1. INSTALL PHOTO ELECTRIC CELL (P.E.C.) ON LIGHTING CABINET. SEE CITY OF KIRKLAND INSPECTOR FOR PART NUMBERS OR EQUIVALENT. FACTORY INSTALLED P.E.C. IS NOT ACCEPTABLE.
2. THE ONLY CONNECTION MADE AT HAND HOLE IS THE POLE GROUNDING CONNECTION.
3. ALL PEDESTRIAN LIGHTS SHALL HAVE 1 SIGN BRACKET.

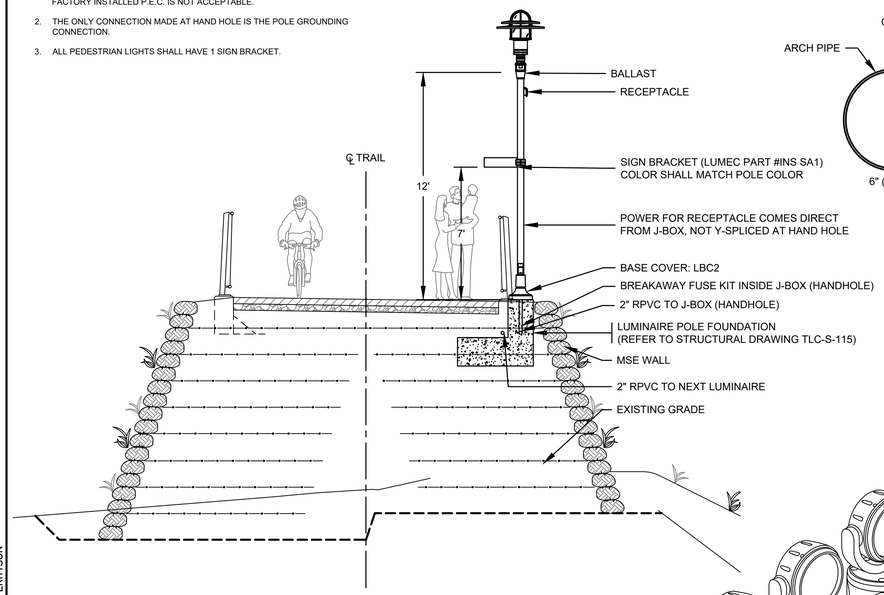

WALKWAY LIGHTING POLES - SECTION A

1/4"=1'0"

OTHER WALKWAY LIGHTING POLES SIMILAR

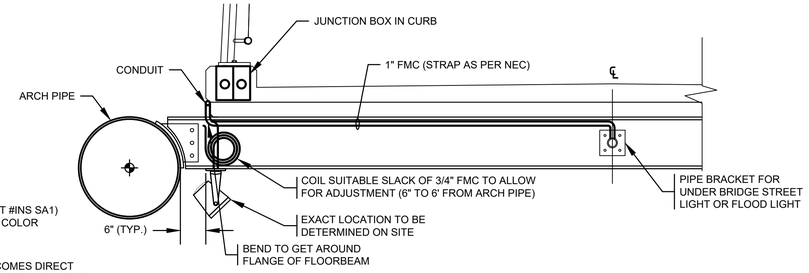

FLOOD LIGHT & STREET LIGHT CONDUIT FEED

N.T.S.

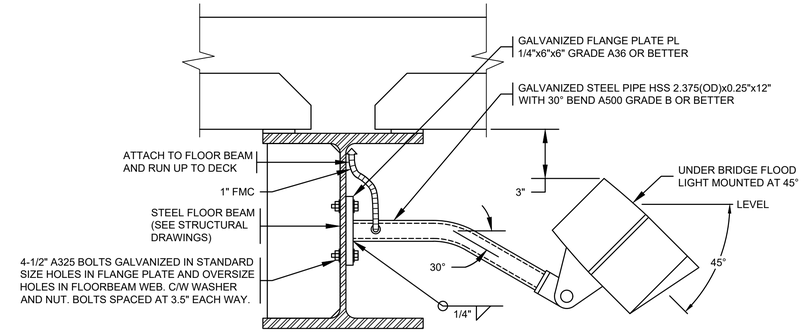

UNDER BRIDGE FLOOD LIGHT

N.T.S.

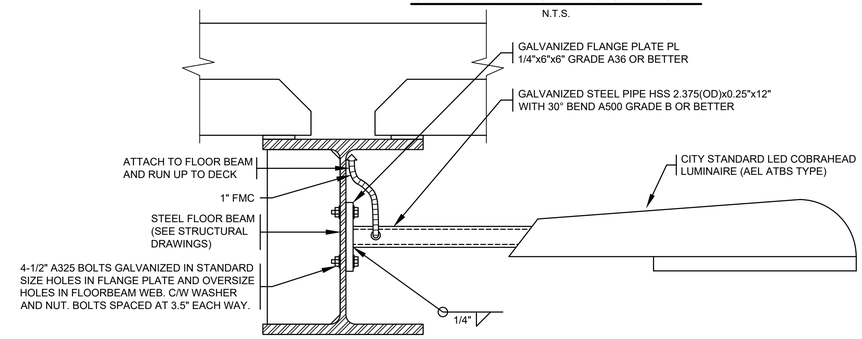

UNDER BRIDGE STREET LIGHT

N.T.S.

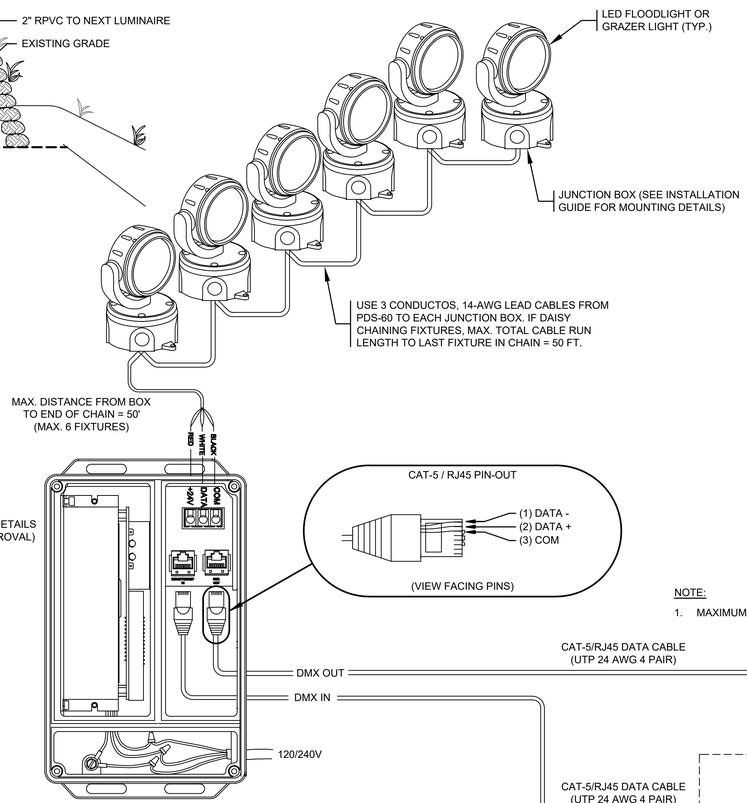

POWER/DMX SYSTEM WIRING DIAGRAM

N.T.S.

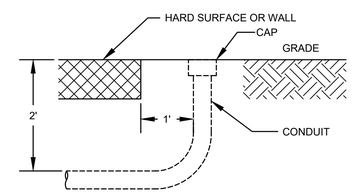

CONDUIT STUB OUT

N.T.S.

NOTE:

1. MAXIMUM NUMBER OF FIXTURES PER POWER/DMX BOX: 6

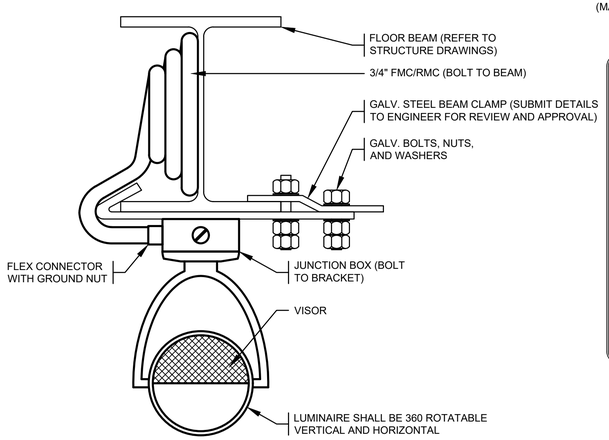

ADJUSTABLE SIDE BEAM CLAMP DETAIL

N.T.S.

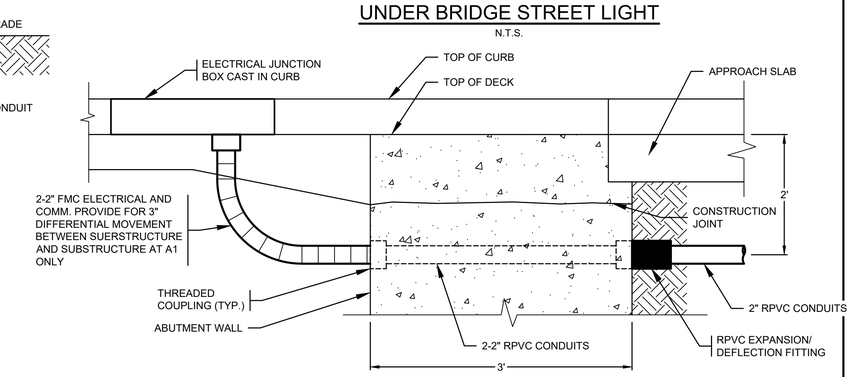

CONDUIT THROUGH ABUTMENT

N.T.S.

A12 SHOWN, A1 SIMILAR

REFER TO TLC-E-300 FOR NOTES AND LEGEND

CITY OF KIRKLAND
DEPARTMENT OF PUBLIC WORKS
123 FIFTH AVENUE KIRKLAND, WA 98033
(425) 587-3800 www.kirklandwa.gov

NO.	DATE	BY	APPR.	REVISION
0	2019/12/06	RF	MGDS	ISSUE FOR BID

COWI
DMD & Associates Ltd.
www.dmdeng.com
office@dmdeng.com

6042-18-4 OF 5

DON McLEAN 2019/12/06
DESIGNED BY: DATE

ROB FRASER 2019/12/06
DRAWN BY: DATE

DANIEL J. WONG 2019/12/06
CHECKED BY: DATE

CITY OF KIRKLAND
TOTEM LAKE CONNECTION

ACCENT LIGHTING DETAILS 3

SHEET: TLC-E-303

SCALE: AS NOTED

FILENAME: 6042-18.dwg

File: P:\Projects\(Jobs 6000-6099)\6042-18 (ST - Totem Lake Bridge, Kirkland, WA)\CAD Drawings\6042-18.dwg Save Date: Dec 05, 2019 3:51 PM Saved By: EKITSON

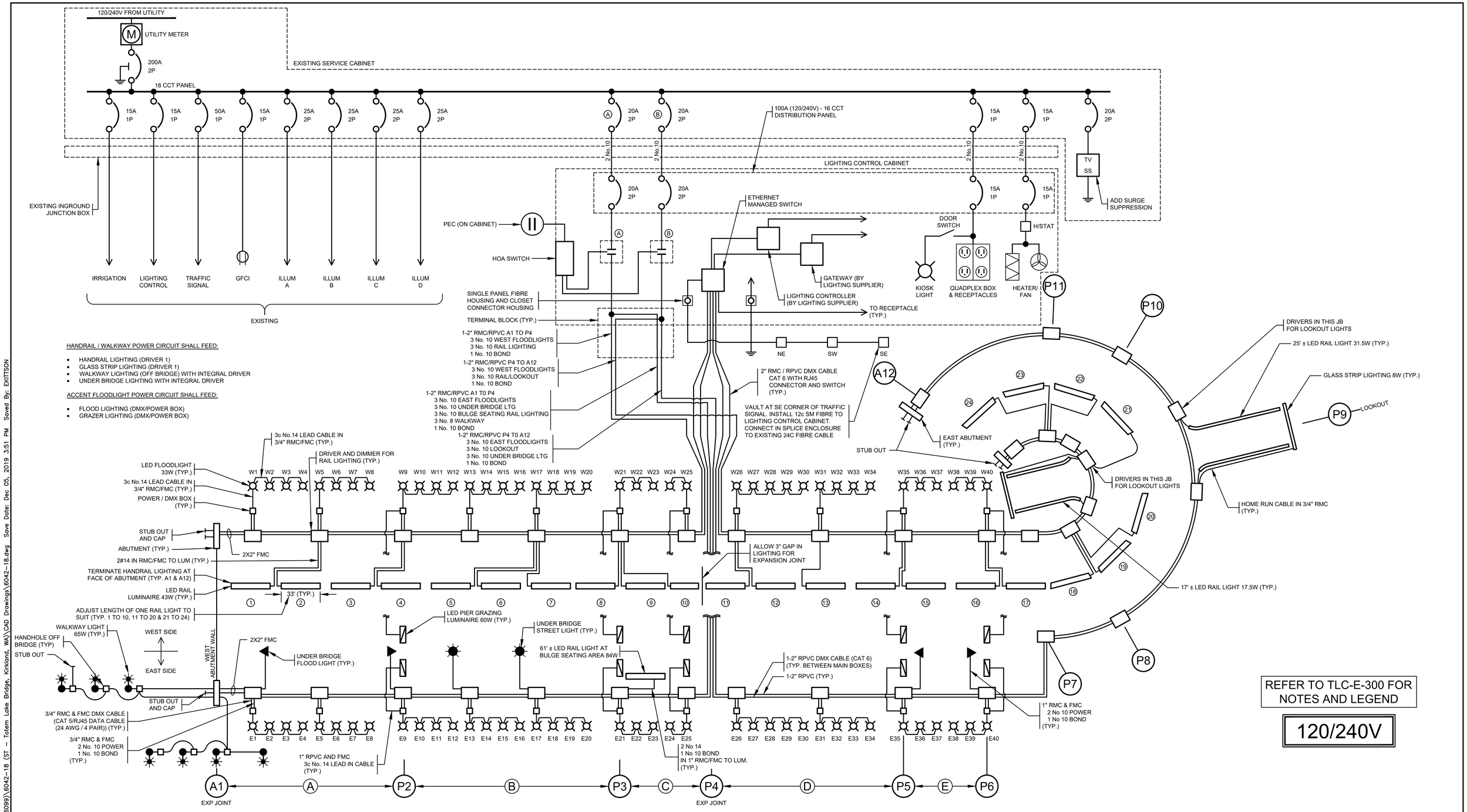

File: P:\Projects\(Jobs 6000-6099)\6042-18 (ST - Totem Lake Bridge, Kirkland, WA)\CAD Drawings\6042-18.dwg Save Date: Dec 05, 2019 3:51 PM Saved By: EKITSON

CITY OF KIRKLAND WASHINGTON

CITY OF KIRKLAND
DEPARTMENT OF PUBLIC WORKS
123 FIFTH AVENUE KIRKLAND, WA 98033
(425) 587-3800 www.kirklandwa.gov

NO.	DATE	BY	APPR.	REVISION
0	2019/12/06	RF	MGDS	ISSUE FOR BID

DANIEL J. WONG — STATE OF WASHINGTON — 50089 — REGISTERED PROFESSIONAL ENGINEER — EXPIRES: 12/30/20

COWI

DMD & Associates Ltd.
www.dmdeng.com
office@dmdeng.com

6042-18-5 OF 5

DON McLEAN	2019/12/06	DESIGNED BY: DATE
ROB FRASER	2019/12/06	DRAWN BY: DATE
DANIEL J. WONG	2019/12/06	CHECKED BY: DATE

CITY OF KIRKLAND
TOTEM LAKE CONNECTION

SINGLE LINE DIAGRAM

SHEET: TLC-E-304
SCALE: NTS
FILENAME: 6042-18.dwg

SOIL CLASSIFICATION CHART

MAJOR DIVISIONS			SYMBOLS GRAPH	SYMBOLS LETTER	TYPICAL DESCRIPTIONS
COARSE GRAINED SOILS	GRAVEL AND GRAVELLY SOILS	CLEAN GRAVELS (LITTLE OR NO FINES)		GW	WELL-GRADED GRAVELS, GRAVEL - SAND MIXTURES
				GP	POORLY-GRADED GRAVELS, GRAVEL - SAND MIXTURES
	MORE THAN 50% OF COARSE FRACTION RETAINED ON NO. 4 SIEVE	GRAVELS WITH FINES (APPRECIABLE AMOUNT OF FINES)		GM	SILTY GRAVELS, GRAVEL - SAND -SILT MIXTURES
				GC	CLAYEY GRAVELS, GRAVEL - SAND - CLAY MIXTURES
MORE THAN 50% RETAINED ON NO. 200 SIEVE	SAND AND SANDY SOILS	CLEAN SANDS (LITTLE OR NO FINES)		SW	WELL-GRADED SANDS, GRAVELLY SANDS
				SP	POORLY-GRADED SANDS, GRAVELLY SAND
	MORE THAN 50% OF COARSE FRACTION PASSING ON NO. 4 SIEVE	SANDS WITH FINES (APPRECIABLE AMOUNT OF FINES)		SM	SILTY SANDS, SAND - SILT MIXTURES
				SC	CLAYEY SANDS, SAND - CLAY MIXTURES
FINE GRAINED SOILS	SILTS AND CLAYS	LIQUID LIMIT LESS THAN 50		ML	INORGANIC SILTS, ROCK FLOUR, CLAYEY SILTS WITH SLIGHT PLASTICITY
				CL	INORGANIC CLAYS OF LOW TO MEDIUM PLASTICITY, GRAVELLY CLAYS, SANDY CLAYS, SILTY CLAYS, LEAN CLAYS
				OL	ORGANIC SILTS AND ORGANIC SILTY CLAYS OF LOW PLASTICITY
MORE THAN 50% PASSING NO. 200 SIEVE	SILTS AND CLAYS	LIQUID LIMIT GREATER THAN 50		MH	INORGANIC SILTS, MICACEOUS OR DIATOMACEOUS SILTY SOILS
				CH	INORGANIC CLAYS OF HIGH PLASTICITY
				OH	ORGANIC CLAYS AND SILTS OF MEDIUM TO HIGH PLASTICITY
HIGHLY ORGANIC SOILS				PT	PEAT, HUMUS, SWAMP SOILS WITH HIGH ORGANIC CONTENTS

NOTE: Multiple symbols are used to indicate borderline or dual soil classifications

Sampler Symbol Descriptions

- 2.4-inch I.D. split barrel
- Standard Penetration Test (SPT)
- Shelby tube
- Piston
- Direct-Push
- Bulk or grab
- Continuous Coring

Blowcount is recorded for driven samplers as the number of blows required to advance sampler 12 inches (or distance noted). See exploration log for hammer weight and drop.

"P" indicates sampler pushed using the weight of the drill rig.

"WOH" indicates sampler pushed using the weight of the hammer.

ADDITIONAL MATERIAL SYMBOLS

SYMBOLS GRAPH	SYMBOLS LETTER	TYPICAL DESCRIPTIONS
	AC	Asphalt Concrete
	CC	Cement Concrete
	CR	Crushed Rock/ Quarry Spalls
	SOD	Sod/Forest Duff
	TS	Topsoil

Groundwater Contact

- Measured groundwater level in exploration, well, or piezometer
- Measured free product in well or piezometer

Graphic Log Contact

- Distinct contact between soil strata
- Approximate contact between soil strata

Material Description Contact

- Contact between geologic units
- Contact between soil of the same geologic unit

Laboratory / Field Tests

%F	Percent fines
%G	Percent gravel
AL	Atterberg limits
CA	Chemical analysis
CP	Laboratory compaction test
CS	Consolidation test
DD	Dry density
DS	Direct shear
HA	Hydrometer analysis
MC	Moisture content
MD	Moisture content and dry density
Mohs	Mohs hardness scale
OC	Organic content
PM	Permeability or hydraulic conductivity
PI	Plasticity index
PP	Pocket penetrometer
SA	Sieve analysis
TX	Triaxial compression
UC	Unconfined compression
VS	Vane shear

Sheen Classification

NS	No Visible Sheen
SS	Slight Sheen
MS	Moderate Sheen
HS	Heavy Sheen

NOTE: The reader must refer to the discussion in the report text and the logs of explorations for a proper understanding of subsurface conditions. Descriptions on the logs apply only at the specific exploration locations and at the time the explorations were made; they are not warranted to be representative of subsurface conditions at other locations or times.

Key to Exploration Logs

GEOENGINEERS

Figure A-1

NOTES:

1. FOR BOREHOLE AND TEST PIT LOCATIONS SEE GEOTECHNICAL REPORT.
2. THIS BOREHOLE LOG IS ONLY A PORTION OF A REPORT PREPARED BY GEOENGINEERS "TOTEM LAKE CONNECTOR PHASE 2 GEOTECHNICAL ENGINEERING SERVICES" DATED OCTOBER 2018.

THIS DRAWING HAS BEEN PREPARED FOR THE TOTEM LAKE CONNECTOR PROJECT. COWI, GEOENGINEERS, THEIR EMPLOYEES, SUBCONSULTANTS OR AGENTS ACCEPT NO RESPONSIBILITY FOR ANY OTHER USE.

CITY OF KIRKLAND
DEPARTMENT OF PUBLIC WORKS
123 FIFTH AVENUE KIRKLAND, WA 98033
(425) 587-3800 www.kirklandwa.gov

NO.	DATE	BY	APPR.	REVISION
0	2019/12/06	CHJS	DCO	100% ISSUE FOR BID

DEBRA C. OVERBAY STATE OF WASHINGTON 29247 REGISTERED PROFESSIONAL ENGINEER

COWI GEOENGINEERS

D. OVERBAY 2019/12/06 DESIGNED BY: DATE
CHJS 2019/12/06 DRAWN BY: DATE
B. PSCHANDER 2019/12/06 CHECKED BY: DATE

CITY OF KIRKLAND
TOTEM LAKE CONNECTION

GEOTECHNICAL BOREHOLE KEY

SHEET: TLC–G–400
SCALE: AS SHOWN
FILENAME: A088367–G–400–421.dwg

File: D:\Projectwise\COWI\db301252\A088367-G-400-421.dwg Save Date: Nov 04, 2019 12:02 PM Saved By: CHJS

Start	End	Total Depth (ft)	71.5	Logged By	EF	Driller	Geologic Drill Exploration, Inc.	Drilling Method	Hollow-stem Auger
Drilled 1/30/2017	1/30/2017			Checked By	HRP				

Surface Elevation (ft) Vertical Datum	128.51 NAVD88	Hammer Data	Automatic 140 (lbs) / 30 (in) Drop	Drilling Equipment	Diedrich D-50 Track Rig
Easting (X) Northing (Y)	1309792.61 261723.77	System Datum	WA State Plane North NAD83 (feet)	See "Remarks" section for groundwater observed	

Notes:

Elevation (feet)	Depth (feet)	Interval	Recovered (in)	Blows/foot	Collected Sample	Sample Name / Testing	Graphic Log	Group Classification	MATERIAL DESCRIPTION	Moisture Content (%)	Fines Content (%)	REMARKS
	0							TS	6 inches topsoil			
								SM	Brown silty fine to medium sand with gravel and organic matter (loose, wet) (fill?)			
125		☒	10	7		1						
	5	☒	8	2		2 MC		SP-SM	Grayish brown fine to medium sand with silt (very loose to medium dense, wet)	24		Groundwater observed at 6 feet at time of drilling
120		☒	8	P		3						
	10	☒	8	P		4 SA				25	7	
115												
	15	☒	7	9		5			Grades to with occasional gravel			Added drilling mud to borehole
110												
	20	☒	10	18		6 MC				20		
105								SM	Grayish brown silty fine to coarse sand with gravel (dense, wet)			Driller noted gravel at 22 feet
	25	☒	18	43		7						
100								ML	Brown silt with sand (very stiff to hard, wet)			Driller noted easier drilling at 27 feet
	30	☒	18	27		8						
95								CL	Orange-brown lean clay with sand and gravel (hard, wet)			
	35											

Note: See Figure A-1 for explanation of symbols.
Coordinates Data Source: Horizontal approximated based on Survey by Alliance Geomatics.
Vertical approximated based on Survey by Alliance Geomatics.

Log of Boring B-1

GeoEngineers

Project: Totem Lake Connector
Project Location: Kirkland, Washington
Project Number: 0231-090-00

Figure A-2
Sheet 1 of 2

Elevation (feet)	Depth (feet)	Interval	Recovered (in)	Blows/foot	Collected Sample	Sample Name / Testing	Graphic Log	Group Classification	MATERIAL DESCRIPTION	Moisture Content (%)	Fines Content (%)	REMARKS
	35	☒	12	41		9 AL				24		AL (LL = 33; PI = 10)
90								CL	Gray lean clay with sand, gravel and cobbles (very stiff to hard, wet)			
	40	☒	10	31		10						
85												Auger refusal at 42½ feet; moved 3 feet to the north and drilled to 45 feet
	45	☒	18	48		11 MC				26		
80												
	50	☒	18	21		12						
75								SP	Gray fine to coarse sand with gravel and cobbles (dense to very dense, wet)			
	55	☒	12	39		13 SA				15	4	1 foot of heave
70												
	60	☒	10	86/11"		14						
65								SP-SM	Gray fine sand with silt and gravel (very dense, wet)			
	65	☒	12	60		15						
60								SP	Gray fine to medium sand with gravel (very dense, wet)			
	70	☒	10	70		16						

Log of Boring B-1 (continued)

GeoEngineers

Project: Totem Lake Connector
Project Location: Kirkland, Washington
Project Number: 0231-090-00

Figure A-2
Sheet 2 of 2

NOTES:

1. FOR BOREHOLE KEY SEE DRAWING TLC–G–400.
2. FOR BOREHOLE LOCATIONS SEE DRAWING TLC–S–102.
3. THIS BOREHOLE LOG IS ONLY A PORTION OF A REPORT PREPARED BY GEOENGINEERS "TOTEM LAKE CONNECTOR PHASE 2 GEOTECHNICAL ENGINEERING SERVICES" DATED OCTOBER 2018.

THIS DRAWING HAS BEEN PREPARED FOR THE TOTEM LAKE CONNECTOR PROJECT. COWI, GEOENGINEERS, THEIR EMPLOYEES, SUBCONSULTANTS OR AGENTS ACCEPT NO RESPONSIBILITY FOR ANY OTHER USE.

CITY OF KIRKLAND
DEPARTMENT OF PUBLIC WORKS
123 FIFTH AVENUE KIRKLAND, WA 98033
(425) 587-3800 www.kirklandwa.gov

NO.	DATE	BY	APPR.	REVISION
0	2019/12/06	CHJS	DCO	100% ISSUE FOR BID

DEBRA C. OVERBAY STATE OF WASHINGTON 29247 REGISTERED PROFESSIONAL ENGINEER 12/6/19

COWI
GeoEngineers

D. OVERBAY 2019/12/06 — DESIGNED BY: DATE
CHJS 2019/12/06 — DRAWN BY: DATE
B. PSCHANDER 2019/12/06 — CHECKED BY: DATE

CITY OF KIRKLAND
TOTEM LAKE CONNECTION

GEOTECHNICAL BOREHOLE 1

SHEET: TLC–G–401
SCALE: AS SHOWN
FILENAME: A088367–G–400–421.dwg

File: D:\Projectwise\COWI\d0301252\A088367-G-400-421.dwg Save Date: Nov 04, 2019 12:02 PM Saved By: CHJS

Drilled	Start 1/31/2017	End 1/31/2017	Total Depth (ft) 71	Logged By EF / Checked By HRP	Driller Geologic Drill Exploration, Inc.	Drilling Method Hollow-stem Auger

Hammer Data	Automatic 140 (lbs) / 30 (in) Drop	Drilling Equipment	Diedrich D-50 Track Rig
Surface Elevation (ft) / Vertical Datum	129.92 NAVD88	Top of Casing Elevation (ft)	129.69
Easting (X) / Northing (Y)	1309862.77 / 261727.90	Horizontal Datum	WA State Plane North NAD83 (feet)

DOE Well I.D.: BIK 733
A 2 (in) well was installed on 1/31/2017 to a depth of 20 (ft).

Groundwater Date Measured	Depth to Water (ft)	Elevation (ft)
1/8/2018	3.32	126.37

Notes: Monitoring well installed in separate boring drilled 5 feet to the southwest.
Groundwater seepage encountered at 6½ feet at time of drilling.

Elevation (feet)	Depth (feet)	Interval	Recovered (in)	Blows/foot	Collected Sample	Sample Name / Testing	Water Level	Graphic Log	Group Classification	MATERIAL DESCRIPTION	Moisture Content (%)	Fines Content (%)
	0								SP-SM	Brown fine to medium sand with occasional gravel (loose, wet)		
		X	8	5		1 MC	▼				20	
125	5	X	10	5		2						
		X	12	4		1						
120	10	X	10	13		4 SF			SP-SM	Brown fine to medium sand with silt (medium dense, wet)	26	9
									SP	Brown fine to medium sand with occasional gravel (loose to medium dense, wet)		
115	15	X	10	8		5				(1 foot of heave, added drilling mud to borehole)		
110	20	X	10	13		6						
105	25	X	12	8		7 MC			SM/ML	Gray silty fine to coarse sand and brown silt with sand, gravel and organic matter (loose/medium stiff, wet) (Driller noted gravel at 23 feet)	25	
100	30	X	6	23		8			GM	Orange-brown silty fine to coarse gravel with sand and cobbles (medium dense, wet)		
95	35											

WELL LOG

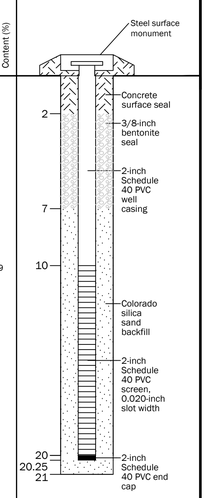

Note: See Figure A-1 for explanation of symbols.
Coordinates Data Source: Horizontal approximated based on Survey by Alliance Geomatics.
Vertical approximated based on Survey by Alliance Geomatics.

Log of Boring with Monitoring Well B-2

GEOENGINEERS

Project: Totem Lake Connector
Project Location: Kirkland, Washington
Project Number: 0231-090-00

Figure A-3
Sheet 1 of 2

Elevation (feet)	Depth (feet)	Interval	Recovered (in)	Blows/foot	Collected Sample	Sample Name / Testing	Water Level	Graphic Log	Group Classification	MATERIAL DESCRIPTION	Moisture Content (%)	Fines Content (%)
	35	X	18	19		9 AL			ML	Orange-brown silt with sand and gravel (very stiff, wet) AL (LL = 30; PI = 7) (Driller noted easier drilling at 36½ feet)	22	
90	40	X	10	22		10			GM	Orange-brown silty fine to coarse gravel with sand and cobbles (medium dense, wet)		
85	45	X	18	24		11			ML	Gray silt with sand and occasional gravel (very stiff, wet)		
80	50	X	12	32		12 MC			GM	Gray silty fine to coarse gravel with sand and cobbles (dense, wet) (Driller noted cobbles at 46 feet)	15	
75	55	X	18	88/11"		13 MC			SP	Gray fine to medium sand with gravel (very dense, wet) (Driller noted easier drilling at 54 feet)	12	
70	60	X	12	50/6"		14				(1-foot heave)		
65	65	X	11	50/5"		15						
60	70	X	10	50/4"		16						

WELL LOG

Log of Boring with Monitoring Well B-2 (continued)

GEOENGINEERS

Project: Totem Lake Connector
Project Location: Kirkland, Washington
Project Number: 0231-090-00

Figure A-3
Sheet 2 of 2

NOTES:

1. FOR BOREHOLE KEY SEE DRAWING TLC–G–400.
2. FOR BOREHOLE LOCATIONS SEE DRAWING TLC–S–102.
3. THIS BOREHOLE LOG IS ONLY A PORTION OF A REPORT PREPARED BY GEOENGINEERS "TOTEM LAKE CONNECTOR PHASE 2 GEOTECHNICAL ENGINEERING SERVICES" DATED OCTOBER 2018.

THIS DRAWING HAS BEEN PREPARED FOR THE TOTEM LAKE CONNECTOR PROJECT. COWI, GEOENGINEERS, THEIR EMPLOYEES, SUBCONSULTANTS OR AGENTS ACCEPT NO RESPONSIBILITY FOR ANY OTHER USE.

CITY OF KIRKLAND
DEPARTMENT OF PUBLIC WORKS
123 FIFTH AVENUE KIRKLAND, WA 98033
(425) 587-3800 www.kirklandwa.gov

NO.	DATE	BY	APPR.	REVISION
0	2019/12/06	CHJS	DCO	100% ISSUE FOR BID

DEBRA C. OVERBAY STATE OF WASHINGTON 29247 REGISTERED PROFESSIONAL ENGINEER

COWI
GEOENGINEERS

D. OVERBAY 2019/12/06 — DESIGNED BY: DATE
CHJS 2019/12/06 — DRAWN BY: DATE
B. PSCHANDER 2019/12/06 — CHECKED BY: DATE

CITY OF KIRKLAND
TOTEM LAKE CONNECTION

GEOTECHNICAL BOREHOLE 2

SHEET: TLC–G–402
SCALE: AS SHOWN
FILENAME: A088367–G–400–421.dwg

File: D:\Projectwise\COWI\d0301252\A088367-G-400-421.dwg Save Date: Nov 04, 2019 12:02 PM Saved By: CHJS

Start	End	Total Depth (ft)	61.5	Logged By	EF	Driller	Geologic Drill Exploration, Inc.	Drilling Method	Hollow-stem Auger
Drilled 1/30/2017	1/30/2017			Checked By	HRP				

Surface Elevation (ft) Vertical Datum	140.99 NAVD88	Hammer Data	Automatic 140 (lbs) / 30 (in) Drop	Drilling Equipment	Diedrich D-50 Track Rig
Easting (X) Northing (Y)	1309919.44 261714.16	System Datum	WA State Plane North NAD83 (feet)	See "Remarks" section for groundwater observed	

Notes:

Elevation (feet)	Depth (feet)	Interval	Recovered (in)	Blows/foot	Collected Sample	Sample Name / Testing	Graphic Log	Group Classification	MATERIAL DESCRIPTION	Moisture Content (%)	Fines Content (%)	REMARKS
	0							GP	Gray fine gravel with sand (medium dense, moist) (fill)			
140		X	4	8		1 / MC		SP-SM	Gray fine to medium sand with silt and gravel (loose, moist) (fill)	9		
135	5	X	10	11		2		SM	Grayish brown silty fine to medium sand with gravel (medium dense, moist) (fill)			
		X	12	3		3 / MC		SM	Reddish brown silty fine to medium sand with occasional gravel (very loose to loose, moist) (fill)	16	15	
130	10	X	10	2		4						
125	15	X	12	5		5 / MC			Grades to orange-brown	26		
								SP-SM	Brown fine to medium sand with silt (loose to medium dense, wet)			Groundwater observed at 17½ feet at time of drilling
120	20	X	13	10		6						
115	25	X	10	12		7						Added drilling mud to borehole
110	30							SM	Brown silty fine to medium sand with gravel (medium dense to dense, wet)	16		
		X	8	24		8 / MC						
	35											

Note: See Figure A-1 for explanation of symbols.
Coordinates Data Source: Horizontal approximated based on Survey by Alliance Geomatics.
Vertical approximated based on Survey by Alliance Geomatics.

Log of Boring B-3

GEOENGINEERS

Project: Totem Lake Connector
Project Location: Kirkland, Washington
Project Number: 0231-090-00

Figure A-4
Sheet 1 of 2

Elevation (feet)	Depth (feet)	Interval	Recovered (in)	Blows/foot	Collected Sample	Sample Name / Testing	Graphic Log	Group Classification	MATERIAL DESCRIPTION	Moisture Content (%)	Fines Content (%)	REMARKS
105	35	X	18	41		9		ML	Brown and gray sandy silt with gravel (hard, wet)			
100	40	X	10	16		10 / MC		CL	Brownish gray sandy clay with gravel (stiff to very stiff, wet)	18		
95	45	X	10	22		11 / MC		SC	Orange-brown clayey fine to coarse sand with gravel (medium dense, wet)	18		
90	50	X	10	25		12		GM	Orange-brown silty fine to coarse gravel with sand and cobbles (medium dense to dense, wet)			
85	55	X	12	28		13						
80	60	X	10	47		14						

Log of Boring B-3 (continued)

GEOENGINEERS

Project: Totem Lake Connector
Project Location: Kirkland, Washington
Project Number: 0231-090-00

Figure A-4
Sheet 2 of 2

NOTES:

1. FOR BOREHOLE KEY SEE DRAWING TLC–G–400.
2. FOR BOREHOLE LOCATIONS SEE DRAWING TLC–S–102.
3. THIS BOREHOLE LOG IS ONLY A PORTION OF A REPORT PREPARED BY GEOENGINEERS "TOTEM LAKE CONNECTOR PHASE 2 GEOTECHNICAL ENGINEERING SERVICES" DATED OCTOBER 2018.

THIS DRAWING HAS BEEN PREPARED FOR THE TOTEM LAKE CONNECTOR PROJECT. COWI, GEOENGINEERS, THEIR EMPLOYEES, SUBCONSULTANTS OR AGENTS ACCEPT NO RESPONSIBILITY FOR ANY OTHER USE.

CITY OF KIRKLAND
DEPARTMENT OF PUBLIC WORKS
123 FIFTH AVENUE KIRKLAND, WA 98033
(425) 587-3800 www.kirklandwa.gov

NO.	DATE	BY	APPR.	REVISION
0	2019/12/06	CHJS	DCO	100% ISSUE FOR BID

DEBRA C. OVERBAY STATE OF WASHINGTON 29247 REGISTERED PROFESSIONAL ENGINEER

COWI
GEOENGINEERS

D. OVERBAY	2019/12/06	DESIGNED BY: DATE
CHJS	2019/12/06	DRAWN BY: DATE
B. PSCHANDER	2019/12/06	CHECKED BY: DATE

CITY OF KIRKLAND
TOTEM LAKE CONNECTION

GEOTECHNICAL BOREHOLE 3

SHEET: TLC–G–403
SCALE: AS SHOWN
FILENAME: A088367–G–400–421.dwg

File: D:\Projectwise\COWI\dt301252\A088367–G–400–421.dwg Save Date: Nov 04, 2019 12:02 PM Saved By: CHJS
Date: 2/13/18 PlanP:/0/0231/090/00/GINT/0231090000.GPJ IBLibrary:/Library/GEOENGINEERS_DP_STD_US_JUNE_2017.GLB/GEB_GEOTECH_STANDARD_LP_NO_GW

Drilled	Start 2/1/2017	End 2/1/2017	Total Depth (ft) 66.5	Logged By EF / Checked By HRP	Driller Geologic Drill Exploration, Inc.	Drilling Method Hollow-stem Auger

Hammer Data	Automatic 140 (lbs) / 30 (in) Drop	Drilling Equipment	Diedrich D-50 Track Rig
Surface Elevation (ft) / Vertical Datum	144.48 NAVD88	Top of Casing Elevation (ft)	144.61
Easting (X) / Northing (Y)	1309737.29 / 261545.15	Horizontal Datum	WA State Plane North NAD83 (feet)

DOE Well I.D.: BIK 734
A 2 (in) well was installed on 2/1/2017 to a depth of 25 (ft).

Groundwater Date Measured	Depth to Water (ft)	Elevation (ft)
1/8/2018	14.94	129.67

Notes: Monitoring well installed in separate boring drilled 5 feet to the south.
Groundwater seepage encountered at 18 feet at time of drilling.

Elevation (feet)	Depth (feet)	Interval	Recovered (in)	Blows/foot	Collected Sample	Sample Name / Testing	Water Level	Graphic Log	Group Classification	MATERIAL DESCRIPTION	Moisture Content (%)	Fines Content (%)
	0								TS	6 inches topsoil		
									SM	Brown silty fine to medium sand with gravel and cobbles (loose to medium dense, moist) (fill)	15	
140		☒	14	10		1 MC						
	5	☒	12	6		2						
		☒	12	5		3 MC			SM	Reddish brown silty fine to medium sand (loose to medium dense, moist)	15	16
135	10	☒	10	12		4						
130									GC	Brown clayey fine to coarse gravel with sand and cobbles (medium dense to dense, wet)	11	
	15	☒	8	14		5 MC	▼					
125	20	☒	5	40		6				(Added drilling mud to borehole)		
120									ML	Brown silt with sand and occasional gravel (stiff, wet)		
	25	☒	18	13		7 AL				AL (LL = 47; PI = 16)	30	
115	30	☒	10	32		8			GM	Brown silty fine to coarse gravel with sand and cobbles (dense, wet)		
										(Driller noted cobbles at 32 feet)		
110	35								CL	Gray clay with sand (stiff, wet)		

WELL LOG

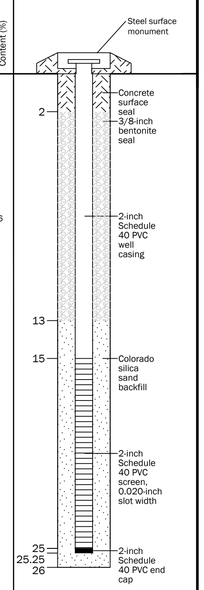

Note: See Figure A-1 for explanation of symbols.
Coordinates Data Source: Horizontal approximated based on Survey by Alliance Geomatics.
Vertical approximated based on Survey by Alliance Geomatics.

Log of Boring with Monitoring Well B-4

GEOENGINEERS

Project: Totem Lake Connector
Project Location: Kirkland, Washington
Project Number: 0231-090-00

Figure A-5
Sheet 1 of 2

Elevation (feet)	Depth (feet)	Interval	Recovered (in)	Blows/foot	Collected Sample	Sample Name / Testing	Water Level	Graphic Log	Group Classification	MATERIAL DESCRIPTION	Moisture Content (%)	Fines Content (%)
	35	☒	18	11		9 MC					26	
105									GC	Brown clayey fine to coarse gravel with sand and cobbles (dense, wet)		
	40	☒	10	35		10 MC					19	
100									ML	Gray silt with sand (very stiff, wet)		
	45	☒	18	19		11						
95	50	☒	6	27		12						
									GC	Brown clayey fine to coarse gravel with sand and cobbles (very dense, wet)		
90	55	☒	10	50/6"		13 MC					9	
									SM	Gray silty fine sand with gravel (very dense, wet)		
85	60	☒	18	95		14						
80	65	☒	10	85/11"		15						

WELL LOG

Log of Boring with Monitoring Well B-4 (continued)

GEOENGINEERS

Project: Totem Lake Connector
Project Location: Kirkland, Washington
Project Number: 0231-090-00

Figure A-5
Sheet 2 of 2

NOTES:

1. FOR BOREHOLE KEY SEE DRAWING TLC–G–400.
2. FOR BOREHOLE LOCATIONS SEE DRAWING TLC–S–102.
3. THIS BOREHOLE LOG IS ONLY A PORTION OF A REPORT PREPARED BY GEOENGINEERS "TOTEM LAKE CONNECTOR PHASE 2 GEOTECHNICAL ENGINEERING SERVICES" DATED OCTOBER 2018.

THIS DRAWING HAS BEEN PREPARED FOR THE TOTEM LAKE CONNECTOR PROJECT. COWI, GEOENGINEERS, THEIR EMPLOYEES, SUBCONSULTANTS OR AGENTS ACCEPT NO RESPONSIBILITY FOR ANY OTHER USE.

CITY OF KIRKLAND
DEPARTMENT OF PUBLIC WORKS
123 FIFTH AVENUE KIRKLAND, WA 98033
(425) 587-3800 www.kirklandwa.gov

NO.	DATE	BY	APPR.	REVISION
0	2019/12/06	CHJS	DCO	100% ISSUE FOR BID

DEBRA C. OVERBAY STATE OF WASHINGTON 29247 REGISTERED PROFESSIONAL ENGINEER

COWI
GEOENGINEERS

D. OVERBAY	2019/12/06	DESIGNED BY: DATE
CHJS	2019/12/06	DRAWN BY: DATE
B. PSCHANDER	2019/12/06	CHECKED BY: DATE

CITY OF KIRKLAND
TOTEM LAKE CONNECTION

GEOTECHNICAL BOREHOLE 4

SHEET: TLC–G–404
SCALE: AS SHOWN
FILENAME: A088367–G–400–421.dwg

File: D:\Projectwise\COWI\dt301252\A088367-G-400-421.dwg Save Date: Nov 04, 2019 12:02 PM Saved By: CHJS
Date: 3/13/18 Path: P:\0231\090\GIS\MT\0231090000.gdb\BLdata\Drawn\GEOENGINEERS_DP_STD_US_JUNE_2017_DLB\GEB_GEOTECH_WELL_NF
Date: 3/13/18 Path: P:\0231\090\GIS\MT\0231090000.gdb\BLdata\Drawn\GEOENGINEERS_DP_STD_US_JUNE_2017_DLB\GEB_GEOTECH_WELL_NF

Drilled	Start 2/2/2017	End 2/2/2017	Total Depth (ft) 31.5	Logged By EF / Checked By HRP	Driller Geologic Drill Exploration, Inc.	Drilling Method Hollow-stem Auger
Surface Elevation (ft) 146.73	Vertical Datum NAVD88		Hammer Data Automatic 140 (lbs) / 30 (in) Drop		Drilling Equipment Diedrich D-50 Track Rig	
Easting (X) 1309590.63	Northing (Y) 261338.47		System Datum WA State Plane North NAD83 (feet)		See "Remarks" section for groundwater observed	

Notes:

Elevation (feet)	Depth (feet)	Interval	Recovered (in)	Blows/foot	Collected Sample	Sample Name / Testing	Graphic Log	Group Classification	MATERIAL DESCRIPTION	Moisture Content (%)	Fines Content (%)	REMARKS
	0							GP	Gray fine gravel with sand (medium dense, moist) (fill)			
145								SM	Brown silty fine to medium sand (medium dense, moist)			
			18	12		1 MC				15		
	5		12	26		2						
140								CL	Light gray lean clay with sand (stiff, moist)			
			18	14		3 MC				25		
	10		6	20		4 AL		ML	Light brown silt with sand and occasional gravel (very stiff, wet)	26		AL (LL = 45; PI = 14)
135												Groundwater observed at 12½ at time of drilling
								SC	Brown clayey fine to coarse sand with gravel (dense, wet)			
	15		7	34		5 MC				16		
130								ML	Gray sandy silt (very stiff, wet)			
	20		14	23		6						
125								CL	Gray clay with sand and occasional gravel (stiff, wet)			
	25		12	9		7						
120								CL	Gray sandy clay with gravel (hard, wet)			Driller noted gravel at 27 feet
	30		12	62		8 MC				19		

Note: See Figure A-1 for explanation of symbols.
Coordinates Data Source: Horizontal approximated based on Survey by Alliance Geomatics.
Vertical approximated based on Survey by Alliance Geomatics.

Log of Boring B-5

GEOENGINEERS

Project: Totem Lake Connector
Project Location: Kirkland, Washington
Project Number: 0231-090-00

Figure A-6
Sheet 1 of 1

Date:3/13/18 Page:P:\0\0231\090\GINT\0231090GDT.GPJ DBLibrary:Library\GEOENGINEERS_OF_PTD_US_JUNE_2017.GLB/GEB_LEGTECH_STANDARD_OF_NO_SW

NOTES:

1. FOR BOREHOLE KEY SEE DRAWING TLC–G–400.
2. FOR BOREHOLE LOCATIONS SEE DRAWING TLC–S–102.
3. THIS BOREHOLE LOG IS ONLY A PORTION OF A REPORT PREPARED BY GEOENGINEERS "TOTEM LAKE CONNECTOR PHASE 2 GEOTECHNICAL ENGINEERING SERVICES" DATED OCTOBER 2018.

THIS DRAWING HAS BEEN PREPARED FOR THE TOTEM LAKE CONNECTOR PROJECT. COWI, GEOENGINEERS, THEIR EMPLOYEES, SUBCONSULTANTS OR AGENTS ACCEPT NO RESPONSIBILITY FOR ANY OTHER USE.

CITY OF KIRKLAND
DEPARTMENT OF PUBLIC WORKS
123 FIFTH AVENUE KIRKLAND, WA 98033
(425) 587-3800 www.kirklandwa.gov

NO.	DATE	BY	APPR.	REVISION
0	2019/12/06	CHJS	DCO	100% ISSUE FOR BID

DEBRA C. OVERBAY STATE OF WASHINGTON 29247 REGISTERED PROFESSIONAL ENGINEER 12/6/19

COWI
GEOENGINEERS

D. OVERBAY 2019/12/06 DESIGNED BY: DATE
CHJS 2019/12/06 DRAWN BY: DATE
B. PSCHANDER 2019/12/06 CHECKED BY: DATE

CITY OF KIRKLAND
TOTEM LAKE CONNECTION

GEOTECHNICAL BOREHOLE 5

SHEET: TLC–G–405
SCALE: AS SHOWN
FILENAME: A088367–G–400–421.dwg

File: D:\Projectwise\COWI\d0301252\A088367-G-400-421.dwg Save Date: Nov 04, 2019 12:02 PM Saved By: CHJS

Start	End	Total Depth (ft)	81	Logged By MWB	Checked By HRP	Driller Geologic Drill Exploration, Inc.	Drilling Method Hollow-stem Auger
Drilled 10/16/2017	10/16/2017						

Surface Elevation (ft)	139.54	Hammer Data	Automatic 140 (lbs) / 30 (in) Drop	Drilling Equipment	Diedrich D-50 Track Rig
Vertical Datum	NAVD88				
Easting (X)	1309835.71	System Datum	WA State Plane North NAD83 (feet)	See "Remarks" section for groundwater observed	
Northing (Y)	261646.62				

Notes:

Elevation (feet)	Depth (feet)	Interval	Recovered (in)	Blows/foot	Collected Sample	Sample Name / Testing	Graphic Log	Group Classification	MATERIAL DESCRIPTION	Sheen	Headspace Vapor (ppm)	REMARKS
	0							TS	6 inches topsoil			
		☒	12	7		1 SA		SM	Brown silty fine to medium sand with gravel and occasional roots (loose, moist) (fill)	NS	<1	SA (MC = 10%; %F = 23)
135	5	☒	10	10		2 CA		SM	Orange-brown silty fine to medium sand with organic matter (loose, moist)	NS	<1	
		☒	10	10		3 MC		SP-SM	Tan fine to medium sand with silt and trace organic matter (loose, moist)	NS	<1	MC = 5%
130	10	☒	14	11		4 CA		SP	Tan fine to medium sand (medium dense, moist)	NS	<1	
125	15	☒	18	10		5 %F		SP-SM	Light brown fine to medium sand with silt (loose to medium dense, wet)	NS	<1	Groundwater observed at 14½ feet at time of drilling MC = 24%; %F = 8
120	20	☒	16	18		6				NS	<1	Driller added mud to borehole
115	25	☒	12	16		7		CL	Orange-brown and gray lean clay with sand and gravel (stiff to very stiff, wet)			
110	30	☒	18	21		8 AL						AL (MC = 20%; LL = 31; PI = 9)
105	35											

Note: See Figure A-1 for explanation of symbols.
Coordinates Data Source: Horizontal approximated based on Survey by Alliance Geomatics.
Vertical approximated based on Survey by Alliance Geomatics.

Log of Boring B-13

GEOENGINEERS

Project: Totem Lake Connector
Project Location: Kirkland, Washington
Project Number: 0231-090-01

Figure A-14
Sheet 1 of 3

Elevation (feet)	Depth (feet)	Interval	Recovered (in)	Blows/foot	Collected Sample	Sample Name / Testing	Graphic Log	Group Classification	MATERIAL DESCRIPTION	Sheen	Headspace Vapor (ppm)	REMARKS
	35	☒	18	20		9						
100	40	☒	14	17		10						
95	45	☒	18	22		11						
90	50	☒	18	55		12 MC		SM	Gray silty fine to medium sand with gravel and cobbles (very dense, wet)			MC = 21%
85	55	☒	17	85/11"		13		SP-SM	Gray fine to medium sand with silt and gravel (very dense, wet)			2 feet of heave
80	60	☒	17	85/11"		14 %F						3 feet of heave MC = 14%; %F = 10
75	65	☒	17	50/5"		15		SP	Gray fine to medium sand with occasional gravel (very dense, wet)			
70	70	☒	17	80/11"		16		SP	Gray fine to medium sand with gravel (very dense, wet)			
65	75	☒	18	38		17						

Log of Boring B-13 (continued)

GEOENGINEERS

Project: Totem Lake Connector
Project Location: Kirkland, Washington
Project Number: 0231-090-01

Figure A-14
Sheet 2 of 3

Elevation (feet)	Depth (feet)	Interval	Recovered (in)	Blows/foot	Collected Sample	Sample Name / Testing	Graphic Log	Group Classification	MATERIAL DESCRIPTION	Sheen	Headspace Vapor (ppm)	REMARKS
60	80	☒	12	50/6"		18						

Log of Boring B-13 (continued)

GEOENGINEERS

Project: Totem Lake Connector
Project Location: Kirkland, Washington
Project Number: 0231-090-01

Figure A-14
Sheet 3 of 3

NOTES:

1. FOR BOREHOLE KEY SEE DRAWING TLC–G–400.
2. FOR BOREHOLE LOCATIONS SEE DRAWING TLC–S–102.
3. THIS BOREHOLE LOG IS ONLY A PORTION OF A REPORT PREPARED BY GEOENGINEERS "TOTEM LAKE CONNECTOR PHASE 2 GEOTECHNICAL ENGINEERING SERVICES" DATED OCTOBER 2018.

THIS DRAWING HAS BEEN PREPARED FOR THE TOTEM LAKE CONNECTOR PROJECT. COWI, GEOENGINEERS, THEIR EMPLOYEES, SUBCONSULTANTS OR AGENTS ACCEPT NO RESPONSIBILITY FOR ANY OTHER USE.

CITY OF KIRKLAND
DEPARTMENT OF PUBLIC WORKS
123 FIFTH AVENUE KIRKLAND, WA 98033
(425) 587-3800 www.kirklandwa.gov

NO.	DATE	BY	APPR.	REVISION
0	2019/12/06	CHJS	DCO	100% ISSUE FOR BID

DEBRA C. OVERBAY STATE OF WASHINGTON 29247 REGISTERED PROFESSIONAL ENGINEER

COWI
GEOENGINEERS

D. OVERBAY	2019/12/06	DESIGNED BY: DATE
CHJS	2019/12/06	DRAWN BY: DATE
B. PSCHANDER	2019/12/06	CHECKED BY: DATE

CITY OF KIRKLAND
TOTEM LAKE CONNECTION

GEOTECHNICAL BOREHOLE 13

SHEET: TLC–G–413
SCALE: AS SHOWN
FILENAME: A088367–G–400–421.dwg

File: D:\Projectwise\COWI\d0301252\A088367-G-400-421.dwg Save Date: Nov 04, 2019 12:02 PM Saved By: CHJS

Drilled	Start 2/2/2017	End 2/2/2017	Total Depth (ft) 21.5	Logged By EF / Checked By HRP	Driller Geologic Drill Exploration, Inc.	Drilling Method Hollow-stem Auger
Surface Elevation (ft) 147.61	Vertical Datum NAVD88		Hammer Data Automatic 140 (lbs) / 30 (in) Drop		Drilling Equipment Diedrich D-50 Track Rig	
Easting (X) 1309517.75	Northing (Y) 261256.19		System Datum WA State Plane North NAD83 (feet)		See "Remarks" section for groundwater observed	

Notes:

Elevation (feet)	Depth (feet)	Interval	Recovered (in)	Blows/foot	Collected Sample	Sample Name / Testing	Graphic Log	Group Classification	MATERIAL DESCRIPTION	Moisture Content (%)	Fines Content (%)	REMARKS
	0							GP	Fine gravel with sand (medium dense, moist) (fill)			
145			18	29		1		ML	Gray silt with sand (very stiff, moist)			
	5		18	48		2 MC		ML	Gray silt with lenses of peat (hard, moist)	38		
140			18	32		3		ML	Gray sandy silt (very stiff to hard, moist to wet)			
	10		18	35		4						Groundwater observed at 11½ feet at time of drilling
135								SM	Gray silty fine sand (dense, wet)			
	15		18	41		5 MC				23		
130								ML	Gray sandy silt (hard, wet)			
	20		18	55		6						

Note: See Figure A-1 for explanation of symbols.
Coordinates Data Source: Horizontal approximated based on Survey by Alliance Geomatics.
Vertical approximated based on Survey by Alliance Geomatics.

Date:3-13-18 Plan:P:\0231\0231090\data\0231090XG.gpj DB:Library\GEOENGINEERS_OF_STD_US_JUNE_2017.GLB\GEB_GEOTECH_STANDARD_TP_NO_DN

Log of Boring B-6

GEOENGINEERS

Project: Totem Lake Connector
Project Location: Kirkland, Washington
Project Number: 0231-090-00

Figure A-7
Sheet 1 of 1

NOTES:

1. FOR BOREHOLE KEY SEE DRAWING TLC–G–400.
2. FOR BOREHOLE LOCATIONS SEE DRAWING TLC–S–102.
3. THIS BOREHOLE LOG IS ONLY A PORTION OF A REPORT PREPARED BY GEOENGINEERS "TOTEM LAKE CONNECTOR PHASE 2 GEOTECHNICAL ENGINEERING SERVICES" DATED OCTOBER 2018.

THIS DRAWING HAS BEEN PREPARED FOR THE TOTEM LAKE CONNECTOR PROJECT. COWI, GEOENGINEERS, THEIR EMPLOYEES, SUBCONSULTANTS OR AGENTS ACCEPT NO RESPONSIBILITY FOR ANY OTHER USE.

CITY OF KIRKLAND
DEPARTMENT OF PUBLIC WORKS
123 FIFTH AVENUE KIRKLAND, WA 98033
(425) 587-3800 www.kirklandwa.gov

NO.	DATE	BY	APPR.	REVISION
0	2019/12/06	CHJS	DCO	100% ISSUE FOR BID

DEBRA C. OVERBAY STATE OF WASHINGTON 29247 REGISTERED PROFESSIONAL ENGINEER 12/6/19

COWI
GEOENGINEERS

D. OVERBAY 2019/12/06 DESIGNED BY: DATE
CHJS 2019/12/06 DRAWN BY: DATE
B. PSCHANDER 2019/12/06 CHECKED BY: DATE

CITY OF KIRKLAND
TOTEM LAKE CONNECTION

GEOTECHNICAL BOREHOLE 6

SHEET: TLC–G–406
SCALE: AS SHOWN
FILENAME: A088367–G–400–421.dwg

File: D:\Projectwise\COWI\d0301252\A088367-G-400-421.dwg Save Date: Nov 04, 2019 12:02 PM Saved By: CHJS

Drilled	Start 2/2/2017	End 2/2/2017	Total Depth (ft) 21.5	Logged By EF / Checked By HRP	Driller Geologic Drill Exploration, Inc.	Drilling Method Hollow-stem Auger
Surface Elevation (ft) 150.47	Vertical Datum NAVD88		Hammer Data Automatic 140 (lbs) / 30 (in) Drop		Drilling Equipment Diedrich D-50 Track Rig	
Easting (X) 1309310.13	Northing (Y) 261022.93		System Datum WA State Plane North NAD83 (feet)		See "Remarks" section for groundwater observed	
Notes:						

Elevation (feet)	Depth (feet)	Interval	Recovered (in)	Blows/foot	Collected Sample	Sample Name / Testing	Graphic Log	Group Classification	MATERIAL DESCRIPTION	Moisture Content (%)	Fines Content (%)	REMARKS
150	0							GP	Gray fine gravel with sand (medium dense, moist) (fill)			
								GM	Brown silty fine to coarse gravel with sand (medium dense, moist) (fill)			
			16	36		1 MC		SM	Gray silty fine to coarse sand with gravel (dense, moist) (fill)	8		
145	5		10	16		2		ML/PT	Gray sandy silt with gravel and occasional thin lenses of peat (stiff to hard, moist)			
			18	21		3 MC				31		
140	10		18	39		4 MC			Becomes wet	61		Groundwater observed at 12½ feet at time of drilling
135	15		18	50		5						
								ML	Gray sandy silt (hard, wet)			
130	20		18	48		6						

Note: See Figure A-1 for explanation of symbols.
Coordinates Data Source: Horizontal approximated based on Survey by Alliance Geomatics.
Vertical approximated based on Survey by Alliance Geomatics.

Log of Boring B-7

GeoEngineers

Project: Totem Lake Connector
Project Location: Kirkland, Washington
Project Number: 0231-090-00

Figure A-8
Sheet 1 of 1

Date:3-13-18 Plot:P:\0\0231\090\dwg\ant\0231090G.dwg DB:\new\Library\GEOENGINEERS_GF_STD_US_JUNE_2017.GLB GEOENGINEERS_GEOTECH_STANDARD_1_8_NO_DW

NOTES:

1. FOR BOREHOLE KEY SEE DRAWING TLC–G–400.
2. FOR BOREHOLE LOCATIONS SEE DRAWING TLC–S–102.
3. THIS BOREHOLE LOG IS ONLY A PORTION OF A REPORT PREPARED BY GEOENGINEERS "TOTEM LAKE CONNECTOR PHASE 2 GEOTECHNICAL ENGINEERING SERVICES" DATED OCTOBER 2018.

THIS DRAWING HAS BEEN PREPARED FOR THE TOTEM LAKE CONNECTOR PROJECT. COWI, GEOENGINEERS, THEIR EMPLOYEES, SUBCONSULTANTS OR AGENTS ACCEPT NO RESPONSIBILITY FOR ANY OTHER USE.

CITY OF KIRKLAND
DEPARTMENT OF PUBLIC WORKS
123 FIFTH AVENUE KIRKLAND, WA 98033
(425) 587-3800 www.kirklandwa.gov

NO.	DATE	BY	APPR.	REVISION
0	2019/12/06	CHJS	DCO	100% ISSUE FOR BID

DEBRA C. OVERBAY STATE OF WASHINGTON 29247 REGISTERED PROFESSIONAL ENGINEER 12/6/19

COWI
GeoEngineers

D. OVERBAY 2019/12/06 DESIGNED BY: DATE
CHJS 2019/12/06 DRAWN BY: DATE
B. PSCHANDER 2019/12/06 CHECKED BY: DATE

CITY OF KIRKLAND
TOTEM LAKE CONNECTION

GEOTECHNICAL BOREHOLE 7

SHEET: TLC–G–407
SCALE: AS SHOWN
FILENAME: A088367–G–400–421.dwg

File: D:\Projectwise\COWI\d0301252\A088367-G-400-421.dwg Save Date: Nov 04, 2019 12:02 PM Saved By: CHJS

Start	End	Total Depth (ft)	51	Logged By MWB / Checked By HRP	Driller Geologic Drill Exploration, Inc.	Drilling Method Hollow-stem Auger
Drilled 10/11/2017	10/11/2017					

Surface Elevation (ft) / Vertical Datum	159.51 NAVD88	Hammer Data	Automatic 140 (lbs) / 30 (in) Drop
Drilling Equipment	Diedrich D-50 Track Rig		
Easting (X) / Northing (Y)	1309411.42 / 261175.51	System Datum	WA State Plane North NAD83 (feet)
See "Remarks" section for groundwater observed			

Notes:

Elevation (feet)	Depth (feet)	Interval	Recovered (in)	Blows/foot	Collected Sample	Sample Name / Testing	Graphic Log	Group Classification	MATERIAL DESCRIPTION	Moisture Content (%)	Fines Content (%)	REMARKS
	0							TS	6 inches topsoil			
								SM	Brown silty fine to medium sand with gravel and roots (medium dense, moist)			
			10	24		1						
155	5		12	27		2 MC		SM	Orange-brown silty fine to medium sand with gravel (medium dense, moist)	7		
			12	25		3		SM	Light brownish gray silty fine to medium sand with occasional gravel (medium dense, moist)			
150	10		8	28		4		SM	Grayish brown silty fine to coarse sand (medium dense, moist)			
145	15		18	26		5 MC		ML	Gray sandy silt with gravel and thin lenses of peat (very stiff, moist)	24		
140	20		18	52		6			Becomes wet and hard			Groundwater observed at 20 feet at time of drilling
135	25		18	43		7		ML	Gray sandy silt (hard, wet)			
130	30		18	39		8						
125	35											

Note: See Figure A-1 for explanation of symbols.
Coordinates Data Source: Horizontal approximated based on Survey by Alliance Geomatics.
Vertical approximated based on Survey by Alliance Geomatics.

Log of Boring B-8

GEOENGINEERS

Project: Totem Lake Connector
Project Location: Kirkland, Washington
Project Number: 0231-090-01

Figure A-9
Sheet 1 of 2

Elevation (feet)	Depth (feet)	Interval	Recovered (in)	Blows/foot	Collected Sample	Sample Name / Testing	Graphic Log	Group Classification	MATERIAL DESCRIPTION	Moisture Content (%)	Fines Content (%)	REMARKS
	35		18	42		9						
120	40		18	48		10						
115	45		18	46		11		CL	Gray sandy lean clay with gravel (hard, wet)			
110	50		9	50/3"		12						

Log of Boring B-8 (continued)

GEOENGINEERS

Project: Totem Lake Connector
Project Location: Kirkland, Washington
Project Number: 0231-090-01

Figure A-9
Sheet 2 of 2

NOTES:

1. FOR BOREHOLE KEY SEE DRAWING TLC–G–400.
2. FOR BOREHOLE LOCATIONS SEE DRAWING TLC–S–102.
3. THIS BOREHOLE LOG IS ONLY A PORTION OF A REPORT PREPARED BY GEOENGINEERS "TOTEM LAKE CONNECTOR PHASE 2 GEOTECHNICAL ENGINEERING SERVICES" DATED OCTOBER 2018.

THIS DRAWING HAS BEEN PREPARED FOR THE TOTEM LAKE CONNECTOR PROJECT. COWI, GEOENGINEERS, THEIR EMPLOYEES, SUBCONSULTANTS OR AGENTS ACCEPT NO RESPONSIBILITY FOR ANY OTHER USE.

CITY OF KIRKLAND
DEPARTMENT OF PUBLIC WORKS
123 FIFTH AVENUE KIRKLAND, WA 98033
(425) 587-3800 www.kirklandwa.gov

NO.	DATE	BY	APPR.	REVISION
0	2019/12/06	CHJS	DCO	100% ISSUE FOR BID

DEBRA C. OVERBAY STATE OF WASHINGTON 29247 REGISTERED PROFESSIONAL ENGINEER

COWI
GEOENGINEERS

D. OVERBAY 2019/12/06 — DESIGNED BY: DATE
CHJS 2019/12/06 — DRAWN BY: DATE
B. PSCHANDER 2019/12/06 — CHECKED BY: DATE

CITY OF KIRKLAND
TOTEM LAKE CONNECTION

GEOTECHNICAL BOREHOLE 8

SHEET: TLC–G–408
SCALE: AS SHOWN
FILENAME: A088367–G–400–421.dwg

File: D:\Projectwise\COWI\d0301252\A088367-G-400-421.dwg Save Date: Nov 04, 2019 12:02 PM Saved By: CHJS
Date:2/13/18 Plan:P:\0\0230\090\data\0231090L1.gpj DB:Library:\Library\GEOENGINEERS_OF_STD_US_JUNE_2017.GLB;

Start	End	Total Depth (ft)	61.5	Logged By	MWB	Driller	Geologic Drill Exploration, Inc.	Drilling Method	Hollow-stem Auger
Drilled 10/10/2017	10/10/2017			Checked By	HRP				

Surface Elevation (ft) Vertical Datum	148.06 NAVD88	Hammer Data	Automatic 140 (lbs) / 30 (in) Drop	Drilling Equipment	Diedrich D-50 Track Rig
Easting (X) Northing (Y)	1309551.07 261337.75	System Datum	WA State Plane North NAD83 (feet)	See "Remarks" section for groundwater observed	

Notes:

Elevation (feet)	Depth (feet)	Interval	Recovered (in)	Blows/foot	Collected Sample	Sample Name / Testing	Graphic Log	Group Classification	MATERIAL DESCRIPTION	Sheen	Headspace Vapor (ppm)	REMARKS
	0							TS	6 inches topsoil			
145		☒	10	14		1 SA		SM	Tan silty fine to medium sand with organic matter (medium dense, moist)	NS	<1	SA (MC = 6%; %F = 16)
	5	☒	10	21		2 CA		SM	Tan silty fine to medium sand (medium dense, moist)	NS	<1	
140		☒	12	34		3		SM	Orange-brown silty fine to medium sand with gravel (dense, moist)	NS	<1	
	10	☒	14	53		4 SA				NS	<1	SA (MC = 11%; %F = 41)
135												
	15	☒	12	15		5 AL_CA		ML	Light gray silt (stiff, wet)	NS	<1	AL (MC = 31%; LL = 34; PI = 9) Groundwater osbserved at 16½ feet at time of drilling
130												
	20	☒	12	32		6 MC		CL	Dark gray and brown sandy lean clay with organic matter (very stiff to hard, wet)	NS	<1	MC = 27%
125												
	25	☒	18	47		7		ML	Gray sandy silt (hard, wet)			
120												
	30	☒	18	63		8 SA		SP-SM	Gray fine to coarse sand with silt, gravel and occasional cobbles (very dense, wet)			SA (MC = 11%; %F=7)
115												
	35							SM				

Note: See Figure A-1 for explanation of symbols.
Coordinates Data Source: Horizontal approximated based on Survey by Alliance Geomatics.
Vertical approximated based on Survey by Alliance Geomatics.

Log of Boring B-9

GEOENGINEERS

Project: Totem Lake Connector
Project Location: Kirkland, Washington
Project Number: 0231-090-01

Figure A-10
Sheet 1 of 2

Elevation (feet)	Depth (feet)	Interval	Recovered (in)	Blows/foot	Collected Sample	Sample Name / Testing	Graphic Log	Group Classification	MATERIAL DESCRIPTION	Sheen	Headspace Vapor (ppm)	REMARKS
	35	☒	10	50/4"		9		SM	Grayish brown silty fine to medium sand with gravel (very dense, wet)			
110												
	40	☒	9	50/3"		10		SP-SM	Gray fine to medium sand with silt and gravel (very dense, wet)			
105												
	45	☒	16	50/4"		11						
100												
	50	☒	18	5*		12		SP	Gray fine to medium sand with gravel (very dense, wet)			2 feet of heave *Blow count understated due to heave
95												
	55	☒	10	50/4"		13		SM	Gray silty fine to medium sand with gravel (very dense, wet)			
90												
	60	☒	18	65		14		SP-SM	Gray fine to medium sand with silt and occasional gravel (very dense, wet)			

Log of Boring B-9 (continued)

GEOENGINEERS

Project: Totem Lake Connector
Project Location: Kirkland, Washington
Project Number: 0231-090-01

Figure A-10
Sheet 2 of 2

NOTES:

1. FOR BOREHOLE KEY SEE DRAWING TLC–G–400.
2. FOR BOREHOLE LOCATIONS SEE DRAWING TLC–S–102.
3. THIS BOREHOLE LOG IS ONLY A PORTION OF A REPORT PREPARED BY GEOENGINEERS "TOTEM LAKE CONNECTOR PHASE 2 GEOTECHNICAL ENGINEERING SERVICES" DATED OCTOBER 2018.

THIS DRAWING HAS BEEN PREPARED FOR THE TOTEM LAKE CONNECTOR PROJECT. COWI, GEOENGINEERS, THEIR EMPLOYEES, SUBCONSULTANTS OR AGENTS ACCEPT NO RESPONSIBILITY FOR ANY OTHER USE.

CITY OF KIRKLAND
DEPARTMENT OF PUBLIC WORKS
123 FIFTH AVENUE KIRKLAND, WA 98033
(425) 587-3800 www.kirklandwa.gov

NO.	DATE	BY	APPR.	REVISION
0	2019/12/06	CHJS	DCO	100% ISSUE FOR BID

DEBRA C. OVERBAY STATE OF WASHINGTON 29247 REGISTERED PROFESSIONAL ENGINEER

COWI
GEOENGINEERS

D. OVERBAY	2019/12/06	DESIGNED BY: DATE
CHJS	2019/12/06	DRAWN BY: DATE
B. PSCHANDER	2019/12/06	CHECKED BY: DATE

CITY OF KIRKLAND
TOTEM LAKE CONNECTION

GEOTECHNICAL BOREHOLE 9

SHEET: TLC–G–409
SCALE: AS SHOWN
FILENAME: A088367–G–400–421.dwg

File: D:\Projectwise\COWI\dt301252\A088367-G-400-421.dwg Save Date: Nov 04, 2019 12:02 PM Saved By: CHJS
Date: 3/13/18 PlanP:0/0/0/0/0/0/0/0/GINT\0231090001.GPJ PBLibrary\Library\GEOENGINEERS_GP_STD_US_JUNE_2017_GLB

Drilled	Start 10/10/2017	End 10/10/2017	Total Depth (ft) 66.5	Logged By MWB / Checked By HRP	Driller Geologic Drill Exploration, Inc.	Drilling Method Hollow-stem Auger

Hammer Data	Automatic 140 (lbs) / 30 (in) Drop	Drilling Equipment	Diedrich D-50 Track Rig
Surface Elevation (ft) / Vertical Datum	144.94 NAVD88	Top of Casing Elevation (ft)	145.03
Easting (X) / Northing (Y)	1309611.46 / 261403.03	Horizontal Datum	WA State Plane North NAD83 (feet)

DOE Well I.D.: BKP202
A 2 (in) well was installed on 10/10/2017 to a depth of 30 (ft). Well was developed on 10/10/2017.

Groundwater Date Measured	Depth to Water (ft)	Elevation (ft)
1/8/2018	9.96	135.07

Notes: Groundwater seepage encountered at 19 feet at time of drilling.

FIELD DATA

Depth (feet)	Elevation (feet)	Interval	Recovered (in)	Blows/foot	Collected Sample	Sample Name / Testing	Water Level	Graphic Log	Group Classification	MATERIAL DESCRIPTION	Sheen	Headspace Vapor (ppm)
0									TS	6 inches topsoil		
			6	5		1			SP-SM	Dark orange-brown fine to medium sand with silt and trace organic matter (loose, moist) (fill?)	NS	0.0
5	140		18	5		2 CA, SA			SM	Brown silty fine to medium sand (loose, moist) SA (MC = 14%; %F = 21)	SS	0.0
			8	11		3					SS	0.5
10	135		8	5		4 AL	▼		CL	Tan and brown lean clay with sand (medium stiff, moist) AL (MC = 31%; LL = 48; PI = 21)	NS	0.0
15	130		8	10		5				Becomes stiff and wet	NS	0.0
20	125		18	20		6 CA					NS	0.0
25	120		18	28		7 %F			SC	Brown clayey fine sand (medium dense, wet) (MC = 25%; %F = 32)		
30	115		18	23		8			CL	Gray sandy clay (very stiff, wet)		
35	110								CL	Gray lean clay with sand (very stiff, wet)		

WELL LOG

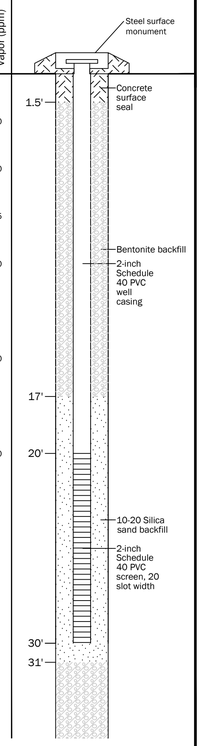

Note: See Figure A-1 for explanation of symbols.
Coordinates Data Source: Horizontal approximated based on Survey by Alliance Geomatics.
Vertical approximated based on Survey by Alliance Geomatics.

Log of Monitoring Well B-10

GEOENGINEERS

Project: Totem Lake Connector
Project Location: Kirkland, Washington
Project Number: 0231-090-01

Figure A-11
Sheet 1 of 2

FIELD DATA

Depth (feet)	Elevation (feet)	Interval	Recovered (in)	Blows/foot	Collected Sample	Sample Name / Testing	Water Level	Graphic Log	Group Classification	MATERIAL DESCRIPTION	Sheen	Headspace Vapor (ppm)
35			8	20		9 AL				AL (MC = 25%; LL = 38; PI = 15)		
40	105		18	50/5"		10			SM	Brownish gray silty fine to medium sand with gravel (very dense, wet)		
45	100		3	50/3"		11						
50	95		18	56		12 MC			ML	Gray silt with sand and occasional gravel (hard, wet) (MC = 23%)		
55	90		18	69		13						
60	85		18	57		14			CL	Gray sandy lean clay with occasional gravel (hard, wet)		
			17	85/11"		15						
65	80								SM	Gray silty fine to medium sand with occasional gravel (very dense, wet)		
										66.5'		

WELL LOG

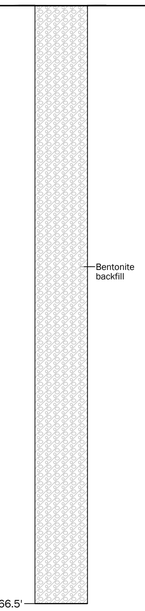

Log of Monitoring Well B-10 (continued)

GEOENGINEERS

Project: Totem Lake Connector
Project Location: Kirkland, Washington
Project Number: 0231-090-01

Figure A-11
Sheet 2 of 2

NOTES:

1. FOR BOREHOLE KEY SEE DRAWING TLC–G–400.
2. FOR BOREHOLE LOCATIONS SEE DRAWING TLC–S–102.
3. THIS BOREHOLE LOG IS ONLY A PORTION OF A REPORT PREPARED BY GEOENGINEERS "TOTEM LAKE CONNECTOR PHASE 2 GEOTECHNICAL ENGINEERING SERVICES" DATED OCTOBER 2018.

THIS DRAWING HAS BEEN PREPARED FOR THE TOTEM LAKE CONNECTOR PROJECT. COWI, GEOENGINEERS, THEIR EMPLOYEES, SUBCONSULTANTS OR AGENTS ACCEPT NO RESPONSIBILITY FOR ANY OTHER USE.

CITY OF KIRKLAND
DEPARTMENT OF PUBLIC WORKS
123 FIFTH AVENUE KIRKLAND, WA 98033
(425) 587-3800 www.kirklandwa.gov

NO.	DATE	BY	APPR.	REVISION
0	2019/12/06	CHJS	DCO	100% ISSUE FOR BID

DEBRA C. OVERBAY, STATE OF WASHINGTON, 29247, REGISTERED PROFESSIONAL ENGINEER

COWI
GEOENGINEERS

D. OVERBAY	DESIGNED BY:	2019/12/06 DATE
CHJS	DRAWN BY:	2019/12/06 DATE
B. PSCHANDER	CHECKED BY:	2019/12/06 DATE

CITY OF KIRKLAND
TOTEM LAKE CONNECTION

GEOTECHNICAL BOREHOLE 10

SHEET: TLC–G–410
SCALE: AS SHOWN
FILENAME: A088367–G–400–421.dwg

File: D:\Projectwise\COWI\dt301252\A088367-G-400-421.dwg Save Date: Nov 04, 2019 12:02 PM Saved By: CHJS
Date:3/13/18 PlanP:/0/0231/090/GINT/0231090001.GPJ PBLibrary:Library/GEOENGINEERS_OF_STD_US_JUNE_2017.GLB/GEO_ENVIRONMENTAL_WELL

Start	End	Total Depth (ft)	71.5	Logged By MWB	Checked By HRP	Driller Geologic Drill Exploration, Inc.	Drilling Method Hollow-stem Auger
Drilled 10/9/2017	10/9/2017						

Surface Elevation (ft) Vertical Datum	144.99 NAVD88	Hammer Data	Automatic 140 (lbs) / 30 (in) Drop
Drilling Equipment	Diedrich D-50 Track Rig		
Easting (X) Northing (Y)	1309713.74 261514.27	System Datum	WA State Plane North NAD83 (feet)
See "Remarks" section for groundwater observed			

Notes:

Elevation (feet)	Depth (feet)	Interval	Recovered (in)	Blows/foot	Collected Sample	Sample Name / Testing	Graphic Log	Group Classification	MATERIAL DESCRIPTION	Sheen	Headspace Vapor (ppm)	REMARKS
	0							SOD	6 inches sod and topsoil			
			3	50/3"*		1		SM	Light brown silty fine sand with gravel and organic matter (loose, moist) (fill)	NS	<1	*Blow count not representative, driving on rock
140	5		14	9		2 CA, MC		SM	Dark brown silty fine to medium sand with gravel (loose, moist)	NS	<1	MC = 10%
			5	4		3		SM	Dark orange-brown silty fine to medium sand with gravel (loose to medium dense, moist)	NS	<1	
135	10		6	15		4 CA				NS	<1	
130	15		6	16		5 MC		SC	Brown clayey fine to medium sand with gravel and occasional cobbles (medium dense, wet)	NS	<1	MC = 10%
125	20		2	19		6		ML	Orange-brown and tan silt with sand and gravel (stiff, wet)	NS	<1	Groundwater observed at 20½ feet at time of drilling
120	25		14	19		7 AL						AL (MC = 28%; LL = 39; PI = 12)
115	30		12	44		8			Becomes hard			
110	35							CL	Gray sandy lean clay with gravel (very stiff, wet)			

Note: See Figure A-1 for explanation of symbols.
Coordinates Data Source: Horizontal approximated based on Survey by Alliance Geomatics.
Vertical approximated based on Survey by Alliance Geomatics.

Log of Boring B-11

GEOENGINEERS

Project: Totem Lake Connector
Project Location: Kirkland, Washington
Project Number: 0231-090-01

Figure A-12
Sheet 1 of 2

Elevation (feet)	Depth (feet)	Interval	Recovered (in)	Blows/foot	Collected Sample	Sample Name / Testing	Graphic Log	Group Classification	MATERIAL DESCRIPTION	Sheen	Headspace Vapor (ppm)	REMARKS
	35		12	26		9						
105	40		18	24		10 MC		ML	Gray silt (very stiff, wet)			MC = 24%
100	45		16	60		11			Becomes hard			
95	50		18	47		12						
90	55		18	32		13 MC		ML	Gray sandy silt with occasional gravel (hard, wet)			MC = 15%
85	60		18	60		14		SM	Brownish gray silty fine sand with occasional gravel (very dense, wet)			
80	65		18	50/5"		15 SA		SP-SM	Gray fine to medium sand with silt and occasional gravel (very dense, wet)			2 feet of heave SA (MC = 16%; %F = 8)
75	70		18	50/5"		16						3 feet of heave

Log of Boring B-11 (continued)

GEOENGINEERS

Project: Totem Lake Connector
Project Location: Kirkland, Washington
Project Number: 0231-090-01

Figure A-12
Sheet 2 of 2

NOTES:

1. FOR BOREHOLE KEY SEE DRAWING TLC–G–400.
2. FOR BOREHOLE LOCATIONS SEE DRAWING TLC–S–102.
3. THIS BOREHOLE LOG IS ONLY A PORTION OF A REPORT PREPARED BY GEOENGINEERS "TOTEM LAKE CONNECTOR PHASE 2 GEOTECHNICAL ENGINEERING SERVICES" DATED OCTOBER 2018.

THIS DRAWING HAS BEEN PREPARED FOR THE TOTEM LAKE CONNECTOR PROJECT. COWI, GEOENGINEERS, THEIR EMPLOYEES, SUBCONSULTANTS OR AGENTS ACCEPT NO RESPONSIBILITY FOR ANY OTHER USE.

CITY OF KIRKLAND
DEPARTMENT OF PUBLIC WORKS
123 FIFTH AVENUE KIRKLAND, WA 98033
(425) 587-3800 www.kirklandwa.gov

NO.	DATE	BY	APPR.	REVISION
0	2019/12/06	CHJS	DCO	100% ISSUE FOR BID

DEBRA C. OVERBAY STATE OF WASHINGTON 29247 REGISTERED PROFESSIONAL ENGINEER 12/6/19

COWI
GEOENGINEERS

D. OVERBAY 2019/12/06 DESIGNED BY: DATE
CHJS 2019/12/06 DRAWN BY: DATE
B. PSCHANDER 2019/12/06 CHECKED BY: DATE

CITY OF KIRKLAND
TOTEM LAKE CONNECTION

GEOTECHNICAL BOREHOLE 11

SHEET: TLC–G–411
SCALE: AS SHOWN
FILENAME: A088367–G–400–421.dwg

File: D:\Projectwise\COWI\d0301252\A088367–G–400–421.dwg Save Date: Nov 04, 2019 12:02 PM Saved By: CHJS

Start	End	Total Depth (ft)	71.5	Logged By MWB	Checked By HRP	Driller Geologic Drill Exploration, Inc.	Drilling Method Hollow-stem Auger
Drilled 10/9/2017	10/9/2017						

Surface Elevation (ft) Vertical Datum	143.37 NAVD88	Hammer Data	Automatic 140 (lbs) / 30 (in) Drop
Drilling Equipment	Diedrich D-50 Track Rig		
Easting (X) Northing (Y)	1309754.33 261558.39	System Datum	WA State Plane North NAD83 (feet)
See "Remarks" section for groundwater observed			

Notes:

Elevation (feet)	Depth (feet)	Interval	Recovered (in)	Blows/foot	Collected Sample	Sample Name / Testing	Graphic Log	Group Classification	MATERIAL DESCRIPTION	Sheen	Headspace Vapor (ppm)	REMARKS
	0							SOD	6 inches sod and topsoil			
140		☒	16	14		1 SA		SM	Dark orange-brown silty fine to medium sand with gravel (medium dense, moist) (fill)	NS	<1	SA (MC = 12%; %F = 35)
	5	☒	12	6		2 CA			Becomes loose	NS	<1	
135		☒	10	9		3 MC		SM	Light brown silty fine to medium sand (loose, moist)	NS	<1	MC = 17%
	10	☒	14	12		4 SA		SP-SM	Light brown fine to medium sand with silt (medium dense, moist)	NS	<1	SA (MC = 6%; %F = 7)
130												
	15	☒	12	6		5 CA		CL	Light orange-brown sandy lean clay with gravel (medium stiff, wet)	NS	<1	
125												Groundwater observed at 17½ feet at time of drilling
	20	☒	8	16		6			Becomes stiff	NS	<1	
120												
	25	☒	16	19		7 AL		ML	Light brown and gray silt with sand and occasional gravel (very stiff, wet)			AL (MC = 28%; LL = 37; PI = 10)
115												
	30	☒	10	34		8 SA		GP-GC	Orange-brown fine to coarse gravel with clay, sand and cobbles (dense, wet)			SA (MC = 10%; %F = 9)
110												
	35											

Note: See Figure A-1 for explanation of symbols.
Coordinates Data Source: Horizontal approximated based on Survey by Alliance Geomatics.
Vertical approximated based on Survey by Alliance Geomatics.

Log of Boring B-12

GEOENGINEERS

Project: Totem Lake Connector
Project Location: Kirkland, Washington
Project Number: 0231-090-01

Figure A-13
Sheet 1 of 2

Elevation (feet)	Depth (feet)	Interval	Recovered (in)	Blows/foot	Collected Sample	Sample Name / Testing	Graphic Log	Group Classification	MATERIAL DESCRIPTION	Sheen	Headspace Vapor (ppm)	REMARKS
105	35	☒	12	28		9		CL	Orange-brown sandy lean clay with gravel (very stiff, wet)			
	40	☒	18	23		10						
100								SC	Orange-brown clayey fine to medium sand with gravel and cobbles (medium dense, wet)			
	45	☒	18	24		11						
95								ML	Gray sandy silt (hard, wet)			
	50	☒	3	50/3"		12 MC						MC = 16%
90												
	55	☒	17	50/5"		13						
85								SM	Gray silty fine sand (very dense, wet)			
	60	☒	17	85/11"		14						
80								SP-SM	Gray fine to medium sand with silt, occasional gravel and lenses of silty fine sand (very dense, wet)			
	65	☒	17	90/11"		15						2 feet of heave
75												
	70	☒	18	34*		16						*Blow count not representative due to heave

Log of Boring B-12 (continued)

GEOENGINEERS

Project: Totem Lake Connector
Project Location: Kirkland, Washington
Project Number: 0231-090-01

Figure A-13
Sheet 2 of 2

NOTES:

1. FOR BOREHOLE KEY SEE DRAWING TLC–G–400.
2. FOR BOREHOLE LOCATIONS SEE DRAWING TLC–S–102.
3. THIS BOREHOLE LOG IS ONLY A PORTION OF A REPORT PREPARED BY GEOENGINEERS "TOTEM LAKE CONNECTOR PHASE 2 GEOTECHNICAL ENGINEERING SERVICES" DATED OCTOBER 2018.

THIS DRAWING HAS BEEN PREPARED FOR THE TOTEM LAKE CONNECTOR PROJECT. COWI, GEOENGINEERS, THEIR EMPLOYEES, SUBCONSULTANTS OR AGENTS ACCEPT NO RESPONSIBILITY FOR ANY OTHER USE.

CITY OF KIRKLAND
DEPARTMENT OF PUBLIC WORKS
123 FIFTH AVENUE KIRKLAND, WA 98033
(425) 587-3800 www.kirklandwa.gov

NO.	DATE	BY	APPR.	REVISION
0	2019/12/06	CHJS	DCO	100% ISSUE FOR BID

DEBRA C. OVERBAY STATE OF WASHINGTON 29247 REGISTERED PROFESSIONAL ENGINEER 12/6/19

COWI
GEOENGINEERS

D. OVERBAY 2019/12/06 DESIGNED BY: DATE
CHJS 2019/12/06 DRAWN BY: DATE
B. PSCHANDER 2019/12/06 CHECKED BY: DATE

CITY OF KIRKLAND
TOTEM LAKE CONNECTION

GEOTECHNICAL BOREHOLE 12

SHEET: TLC–G–412
SCALE: AS SHOWN
FILENAME: A088367–G–400–421.dwg

File: D:\Projectwise\COWI\d0301252\A088367–G–400–421.dwg Save Date: Nov 04, 2019 12:02 PM Saved By: CHJS
Date:2/13/18 Path:P:0/0231090/GINT/0231090.GPJ DB:Library/Library/GEOENGINEERS_OF_STD_US_JUNE_2017.GLB/GEB_ENVIRONMENTAL_STANDARD_NO_GW

Start	End	Total Depth (ft)	81.5	Logged By MWB	Checked By HRP	Driller Geologic Drill Exploration, Inc.	Drilling Method Hollow-stem Auger
Drilled 10/16/2017	10/16/2017						

Surface Elevation (ft)	135.8	Hammer Data	Automatic 140 (lbs) / 30 (in) Drop	Drilling Equipment	Diedrich D-50 Track Rig
Vertical Datum	NAVD88				
Easting (X)	1309885.87	System Datum	WA State Plane North NAD83 (feet)	See "Remarks" section for groundwater observed	
Northing (Y)	261703.44				

Notes:

Elevation (feet)	Depth (feet)	Interval	Recovered (in)	Blows/foot	Collected Sample	Sample Name / Testing	Graphic Log	Group Classification	MATERIAL DESCRIPTION	Sheen	Headspace Vapor (ppm)	REMARKS
135	0							TS	6 inches topsoil			
								SM	Dark orange-brown silty fine to medium sand with gravel and organic matter (very loose, moist) (fill)			
		☒	8	2		1 %F				NS	<1	MC = 11%; %F = 9
130	5	☒	14	6		2 CA				NS	<1	
								SP-SM	Brown fine to medium sand with silt and occasional gravel (loose to medium dense, moist)			
		☒	8	3		3				NS	<1	
125	10	☒	12	8		4 CA				NS	<1	
									Becomes wet			Groundwater observed at 12 feet at time of drilling
120	15	☒	18	14		5 MC				NS	<1	Driller added mud to borehole MC = 24%
115	20	☒	18	4		6 SA						SA (MC = 25%; %F = 8)
								SC	Orange-brown clayey fine to medium sand with gravel (medium dense, wet)			
110	25	☒	16	11		7						
								ML	Gray silt with sand and occasional gravel (stiff to very stiff, wet)			
105	30	☒	10	19		8 AL						AL (MC = 36%; LL = 42; PI = 12)
	35											

Note: See Figure A-1 for explanation of symbols.
Coordinates Data Source: Horizontal approximated based on Survey by Alliance Geomatics.
Vertical approximated based on Survey by Alliance Geomatics.

Log of Boring B-14

GeoEngineers

Project: Totem Lake Connector
Project Location: Kirkland, Washington
Project Number: 0231-090-01

Figure A-15
Sheet 1 of 3

Elevation (feet)	Depth (feet)	Interval	Recovered (in)	Blows/foot	Collected Sample	Sample Name / Testing	Graphic Log	Group Classification	MATERIAL DESCRIPTION	Sheen	Headspace Vapor (ppm)	REMARKS
100	35	☒	18	13		9						
95	40	☒	14	30		10 MC		CL	Orange-brown sandy lean clay with gravel (very stiff, wet)			MC = 22%
90	45	☒	18	38		11						
85	50	☒	8	24		12		CL	Gray sandy lean clay with gravel (very stiff, wet)			
80	55	☒	11	50/5"		13			Becomes hard			
75	60	☒	18	34		14						
70	65	☒	16	90/2"		15 MC		SM	Gray silty fine to medium sand with gravel and cobbles (very dense, wet)			MC = 12%
65	70	☒	12	86/		16		SP	Gray fine to medium sand with gravel (very dense, wet)			
60	75	☒	17	50/5"		17						1 foot of heave

Log of Boring B-14 (continued)

GeoEngineers

Project: Totem Lake Connector
Project Location: Kirkland, Washington
Project Number: 0231-090-01

Figure A-15
Sheet 2 of 3

Elevation (feet)	Depth (feet)	Interval	Recovered (in)	Blows/foot	Collected Sample	Sample Name / Testing	Graphic Log	Group Classification	MATERIAL DESCRIPTION	Sheen	Headspace Vapor (ppm)	REMARKS
55	80	☒	17	85/11"		18						1 foot of heave

Log of Boring B-14 (continued)

GeoEngineers

Project: Totem Lake Connector
Project Location: Kirkland, Washington
Project Number: 0231-090-01

Figure A-15
Sheet 3 of 3

NOTES:

1. FOR BOREHOLE KEY SEE DRAWING TLC–G–400.
2. FOR BOREHOLE LOCATIONS SEE DRAWING TLC–S–102.
3. THIS BOREHOLE LOG IS ONLY A PORTION OF A REPORT PREPARED BY GEOENGINEERS "TOTEM LAKE CONNECTOR PHASE 2 GEOTECHNICAL ENGINEERING SERVICES" DATED OCTOBER 2018.

THIS DRAWING HAS BEEN PREPARED FOR THE TOTEM LAKE CONNECTOR PROJECT. COWI, GEOENGINEERS, THEIR EMPLOYEES, SUBCONSULTANTS OR AGENTS ACCEPT NO RESPONSIBILITY FOR ANY OTHER USE.

CITY OF KIRKLAND
DEPARTMENT OF PUBLIC WORKS
123 FIFTH AVENUE KIRKLAND, WA 98033
(425) 587-3800 www.kirklandwa.gov

NO.	DATE	BY	APPR.	REVISION
0	2019/12/06	CHJS	DCO	100% ISSUE FOR BID

DEBRA C. OVERBAY STATE OF WASHINGTON 29247 REGISTERED PROFESSIONAL ENGINEER 12/06/19

COWI
GeoEngineers

D. OVERBAY	2019/12/06	DESIGNED BY: DATE
CHJS	2019/12/06	DRAWN BY: DATE
B. PSCHANDER	2019/12/06	CHECKED BY: DATE

CITY OF KIRKLAND
TOTEM LAKE CONNECTION

GEOTECHNICAL BOREHOLE 14

SHEET: TLC–G–414
SCALE: AS SHOWN
FILENAME: A088367–G–400–421.dwg

File: D:\Projectwise\COWI\d0301252\A088367-G-400-421.dwg Save Date: Nov 04, 2019 12:02 PM Saved By: CHJS
Date:3/13/18 Pen:P:\0231090\DWT\0231090L1.DPI DBLibrary:\library\GEOENGINEERS_DF_STD_US_JUNE_2017.GLB/GEB_ENVIRONMENTAL_STANDARD_NO_GW

Start	End	Total Depth (ft)	81	Logged By	MWB	Checked By	HRP	Driller	Geologic Drill Exploration, Inc.	Drilling Method	Hollow-stem Auger
Drilled 10/17/2017	10/17/2017										

Surface Elevation (ft) Vertical Datum	127.21 NAVD88	Hammer Data	Automatic 140 (lbs) / 30 (in) Drop	Drilling Equipment	Diedrich D-50 Track Rig
Easting (X) Northing (Y)	1309898.00 261745.80	System Datum	WA State Plane North NAD83 (feet)	See "Remarks" section for groundwater observed	

Notes:

Elevation (feet)	Depth (feet)	Interval	Recovered (in)	Blows/foot	Collected Sample	Sample Name / Testing	Graphic Log	Group Classification	MATERIAL DESCRIPTION	Moisture Content (%)	Fines Content (%)	REMARKS
	0							TS	6 inches topsoil			
125			12	3		1		SM	Dark brown silty fine to medium sand with gravel and organic matter (very loose, wet) (fill)			
	5		14	1		2		SM	Grayish brown silty fine to medium sand with occasional gravel (very loose to loose, wet)			Groundwater observed at 4½ feet at time of drilling Driller added mud to borehole
120			18	10		3 / MC		SP	Brownish gray fine to medium sand (loose, wet)	28	5	
	10		12	7		4						
115												
	15		10	8		5						
110												
	20		16	11		6			Becomes medium dense			
105												
	25		12	21		7		SM	Orange-brown silty fine to medium sand with gravel (medium dense, wet)			
100												
	30		18	10		8 / AL		CL	Gray lean clay with sand and gravel (stiff to very stiff, wet)	21		AL (LL = 38; PI = 14)
95												
	35											

Note: See Figure A-1 for explanation of symbols.
Coordinates Data Source: Horizontal approximated based on Survey by Alliance Geomatics.
Vertical approximated based on Survey by Alliance Geomatics.

Log of Boring B-15

GeoEngineers

Project: Totem Lake Connector
Project Location: Kirkland, Washington
Project Number: 0231-090-01

Figure A-16
Sheet 1 of 3

Elevation (feet)	Depth (feet)	Interval	Recovered (in)	Blows/foot	Collected Sample	Sample Name / Testing	Graphic Log	Group Classification	MATERIAL DESCRIPTION	Moisture Content (%)	Fines Content (%)	REMARKS
	35		2	19		9						
90												
	40		18	23		10						
85												
	45		18	18		11 / MC		ML	Gray silt with sand (very stiff, wet)	31		
80												
	50		18	63		12		ML	Gray silt with thin lenses of peat (hard, wet)			
75												
	55		18	36		13						
70												
	60		12	77		14 / MC		GC	Orange-brown clayey fine to coarse gravel with sand and cobbles (very dense, wet)	15		
65												
	65		12	71		15 / MC		SM	Gray silty fine to medium sand with gravel and cobbles (very dense, wet)	15		
60												
	70		16	76		16		SP-SM	Gray fine to medium sand with gravel (very dense, wet)			2 feet of heave
55												
	75		12	64		17						

Log of Boring B-15 (continued)

GeoEngineers

Project: Totem Lake Connector
Project Location: Kirkland, Washington
Project Number: 0231-090-01

Figure A-16
Sheet 2 of 3

Elevation (feet)	Depth (feet)	Interval	Recovered (in)	Blows/foot	Collected Sample	Sample Name / Testing	Graphic Log	Group Classification	MATERIAL DESCRIPTION	Moisture Content (%)	Fines Content (%)	REMARKS
80												
	80		10	50/4"		18		CL	Gray sandy lean clay with gravel (hard, wet)			

Log of Boring B-15 (continued)

GeoEngineers

Project: Totem Lake Connector
Project Location: Kirkland, Washington
Project Number: 0231-090-01

Figure A-16
Sheet 3 of 3

NOTES:

1. FOR BOREHOLE KEY SEE DRAWING TLC–G–400.
2. FOR BOREHOLE LOCATIONS SEE DRAWING TLC–S–102.
3. THIS BOREHOLE LOG IS ONLY A PORTION OF A REPORT PREPARED BY GEOENGINEERS "TOTEM LAKE CONNECTOR PHASE 2 GEOTECHNICAL ENGINEERING SERVICES" DATED OCTOBER 2018.

THIS DRAWING HAS BEEN PREPARED FOR THE TOTEM LAKE CONNECTOR PROJECT. COWI, GEOENGINEERS, THEIR EMPLOYEES, SUBCONSULTANTS OR AGENTS ACCEPT NO RESPONSIBILITY FOR ANY OTHER USE.

CITY OF KIRKLAND
DEPARTMENT OF PUBLIC WORKS
123 FIFTH AVENUE KIRKLAND, WA 98033
(425) 587-3800 www.kirklandwa.gov

NO.	DATE	BY	APPR.	REVISION
0	2019/12/06	CHJS	DCO	100% ISSUE FOR BID

DEBRA C. OVERBAY STATE OF WASHINGTON 29247 REGISTERED PROFESSIONAL ENGINEER

COWI
GeoEngineers

D. OVERBAY	2019/12/06	DESIGNED BY: DATE
CHJS	2019/12/06	DRAWN BY: DATE
B. PSCHANDER	2019/12/06	CHECKED BY: DATE

CITY OF KIRKLAND
TOTEM LAKE CONNECTION

GEOTECHNICAL BOREHOLE 15

SHEET: TLC–G–415
SCALE: AS SHOWN
FILENAME: A088367–G–400–421.dwg

File: D:\Projectwise\COWI\d0301252\A088367-G-400-421.dwg Save Date: Nov 04, 2019 12:02 PM Saved By: CHJS

Start Drilled 7/25/2018	End 7/25/2018	Total Depth (ft) 81	Logged By EAW Checked By HRP	Driller Geologic Drill Exploration, Inc.	Drilling Method Hollow-stem Auger
Surface Elevation (ft) Vertical Datum	125.25 NAVD88	Hammer Data	Automatic 140 (lbs) / 30 (in) Drop	Drilling Equipment	Diedrich D-50 Track Rig
Easting (X) Northing (Y)	1309871.36 261788.14	System Datum	WA State Plane North NAD83 (feet)	See "Remarks" section for groundwater observed	

Notes:

Elevation (feet)	Depth (feet)	Interval	Recovered (in)	Blows/foot	Collected Sample	Sample Name / Testing	Graphic Log	Group Classification	MATERIAL DESCRIPTION	Moisture Content (%)	Fines Content (%)	REMARKS
125	0							TS	10 inches topsoil			
		☒	12	P		1 / MC		ML	Dark brown sandy silt with trace organic matter (very soft, wet)	36		Groundwater observed at 1 foot at time of drilling
120	5	☒	12	3		2		SP-SM	Gray-brown fine to medium sand with silt (very loose to loose, wet)			
		☒	14	8		3 / SA				26	10	
115	10	☒	16	7		4						Driller added mud to borehole
		☒	12	10		5 / SA				25	11	
110	15	☒	12	8		6						1 foot of heave
105	20	☒	12	7		7 / SA		SW-SM	Gray-brown fine to coarse sand with silt and gravel (loose, wet)	21	10	
100	25	☒	16	12		8 / MC		MH	Dark gray elastic silt with sand and trace wood fragments (stiff, wet)	22		
									Grades to hard			
95	30	☒	12	39		9 / MC, AL				45		AL (LL=52; PI=17)
									Grades to very stiff			
	35											

Note: See Figure A-1 for explanation of symbols.
Coordinates Data Source: Horizontal approximated based on Survey by Alliance Geomatics.
Vertical approximated based on Survey by Alliance Geomatics.

Log of Boring B-16

GEOENGINEERS

Project: Totem Lake Connector
Project Location: Kirkland, Washington
Project Number: 0231-090-01

Figure A-17
Sheet 1 of 3

Elevation (feet)	Depth (feet)	Interval	Recovered (in)	Blows/foot	Collected Sample	Sample Name / Testing	Graphic Log	Group Classification	MATERIAL DESCRIPTION	Moisture Content (%)	Fines Content (%)	REMARKS
90	35	☒	18	20		10 / MC				22		
85	40	☒	16	21		11 / MC		ML	Gray and brown sandy silt with gravel and trace organic matter (very stiff, wet)	28		
80	45	☒	18	30		12 / MC, AL		ML	Gray silt with sand (very stiff, wet)	28		AL (non-plastic)
75	50	☒	18	27		13						
70	55	☒	18	22		14 / MC		CL	Gray sandy clay with gravel (very stiff, wet)	30		
65	60	☒	10	22		15 / MC		GP-GM	Gray fine to coarse gravel with silt, sand, cobbles and trace organic matter (medium dense, wet)	10		
60	65	☒	12	50/4"		16 / SA		SP-SM	Gray fine to coarse sand with silt, gravel and cobbles (very dense, wet)	8	7	1 foot of heave
55	70	☒	10	50/6"		17						1 foot of heave
50	75	☒	12	80		18 / MC		ML	Gray silt with sand (hard, wet)	15		1 foot of heave

Log of Boring B-16 (continued)

GEOENGINEERS

Project: Totem Lake Connector
Project Location: Kirkland, Washington
Project Number: 0231-090-01

Figure A-17
Sheet 2 of 3

Elevation (feet)	Depth (feet)	Interval	Recovered (in)	Blows/foot	Collected Sample	Sample Name / Testing	Graphic Log	Group Classification	MATERIAL DESCRIPTION	Moisture Content (%)	Fines Content (%)	REMARKS
								SM	Gray silty fine sand (very dense, wet)			
75	80	☒	11	50/5"		19 / MC				17		1 foot of heave

Log of Boring B-16 (continued)

GEOENGINEERS

Project: Totem Lake Connector
Project Location: Kirkland, Washington
Project Number: 0231-090-01

Figure A-17
Sheet 3 of 3

NOTES:

1. FOR BOREHOLE KEY SEE DRAWING TLC–G–400.
2. FOR BOREHOLE LOCATIONS SEE DRAWING TLC–S–102.
3. THIS BOREHOLE LOG IS ONLY A PORTION OF A REPORT PREPARED BY GEOENGINEERS "TOTEM LAKE CONNECTOR PHASE 2 GEOTECHNICAL ENGINEERING SERVICES" DATED OCTOBER 2018.

THIS DRAWING HAS BEEN PREPARED FOR THE TOTEM LAKE CONNECTOR PROJECT. COWI, GEOENGINEERS, THEIR EMPLOYEES, SUBCONSULTANTS OR AGENTS ACCEPT NO RESPONSIBILITY FOR ANY OTHER USE.

CITY OF KIRKLAND
DEPARTMENT OF PUBLIC WORKS
123 FIFTH AVENUE KIRKLAND, WA 98033
(425) 587-3800 www.kirklandwa.gov

NO.	DATE	BY	APPR.	REVISION
0	2019/12/06	CHJS	DCO	100% ISSUE FOR BID

DEBRA C. OVERBAY, STATE OF WASHINGTON, 29247, REGISTERED PROFESSIONAL ENGINEER

COWI
GEOENGINEERS

D. OVERBAY	2019/12/06	DESIGNED BY / DATE
CHJS	2019/12/06	DRAWN BY / DATE
B. PSCHANDER	2019/12/06	CHECKED BY / DATE

CITY OF KIRKLAND
TOTEM LAKE CONNECTION

GEOTECHNICAL BOREHOLE 16

SHEET: TLC–G–416
SCALE: AS SHOWN
FILENAME: A088367–G–400–421.dwg

File: D:\Projectwise\COWI\dt301252\A088367-G-400-421.dwg Save Date: Nov 04, 2019 12:02 PM Saved By: CHJS
Date:11/26/18 Path:P:\0\0231090\GINT\023109001.GPJ DBLibrary:Library:GEOENGINEERS_OF_STD_US_JUNE_2017.GLB/GEB_GEOTECH_STANDARD_SF_NO_GW

Start Drilled 7/23/2018	End 7/23/2018	Total Depth (ft) 80.5	Logged By EAW Checked By HRP	Driller Geologic Drill Exploration, Inc.	Drilling Method Hollow-stem Auger
Surface Elevation (ft) 124.4 Vertical Datum NAVD88			Hammer Data Automatic 140 (lbs) / 30 (in) Drop	Drilling Equipment Diedrich D-50 Track Rig	
Easting (X) 1309821.39 Northing (Y) 261796.19			System Datum WA State Plane North NAD83 (feet)	See "Remarks" section for groundwater observed	
Notes:					

Elevation (feet)	Depth (feet)	Interval	Recovered (in)	Blows/foot	Collected Sample	Sample Name / Testing	Graphic Log	Group Classification	MATERIAL DESCRIPTION	Moisture Content (%)	Fines Content (%)	REMARKS
	0							TS	6 inches topsoil			
								ML	Gray silt with sand and organic matter (stiff, wet)	26		Groundwater observed at 1 foot at time of drilling
120		☒	16	9		1 MC						
	5	☒	18	3		2 SA		SM	Dark gray silty fine to medium sand with lenses of silt (very loose, wet)	34	14	
		☒	18	16		3		SM	Gray silty fine to medium sand with trace organic matter (medium dense, wet)			Driller added mud to borehole
115	10	☒	12	7		4 AL		SP-SM	Gray-brown fine to medium sand with silt (loose, wet)	25	11	
		☒	13	9		5						
110	15	☒	14	9		6 AL				24	10	
105	20	☒	18	7		7			Grades with occasional gravel			
100	25	☒	18	13		8 SA		SW-SM	Light brown fine to coarse sand with silt and gravel (medium dense, wet)	17	8	
95								ML	Gray silt with sand and gravel (very stiff, wet)			
	30	☒	12	28		9 MC				24		
90								ML	Gray silt with sand (hard, wet)			
	35											

Note: See Figure A-1 for explanation of symbols.
Coordinates Data Source: Horizontal approximated based on Survey by Alliance Geomatics.
Vertical approximated based on Survey by Alliance Geomatics.

Log of Boring B-17

GEOENGINEERS

Project: Totem Lake Connector
Project Location: Kirkland, Washington
Project Number: 0231-090-01

Figure A-18
Sheet 1 of 3

Elevation (feet)	Depth (feet)	Interval	Recovered (in)	Blows/foot	Collected Sample	Sample Name / Testing	Graphic Log	Group Classification	MATERIAL DESCRIPTION	Moisture Content (%)	Fines Content (%)	REMARKS
	35	☒	18	33		10						
85	40	☒	10	34		11 MC, AL		CL	Gray lean clay with occasional gravel (very stiff to hard, wet)	28		AL (LL-31; PI-9)
80	45	☒	12	26		12						
75	50	☒	0	23		13						
70	55	☒	12	23		14 MC				29		
65	60	☒	12	50/6"		15 MC		SP	Gray fine sand with occasional gravel (dense, wet)	19		1 foot of heave
60	65	☒	18	75		16 SA		SM	Gray silty fine to coarse sand with gravel and cobbles (very dense, wet)	13	24	6 inches of heave
55	70	☒	14	78		17		SP	Gray fine to medium sand with gravel (very dense, wet)			
50	75	☒	11	70/5"		18 MC		SM	Gray silty fine to medium sand with gravel (very dense, wet)	14		

Log of Boring B-17 (continued)

GEOENGINEERS

Project: Totem Lake Connector
Project Location: Kirkland, Washington
Project Number: 0231-090-01

Figure A-18
Sheet 2 of 3

Elevation (feet)	Depth (feet)	Interval	Recovered (in)	Blows/foot	Collected Sample	Sample Name / Testing	Graphic Log	Group Classification	MATERIAL DESCRIPTION	Moisture Content (%)	Fines Content (%)	REMARKS
45	80	☒	5	100/5"		19						

Log of Boring B-17 (continued)

GEOENGINEERS

Project: Totem Lake Connector
Project Location: Kirkland, Washington
Project Number: 0231-090-01

Figure A-18
Sheet 3 of 3

NOTES:

1. FOR BOREHOLE KEY SEE DRAWING TLC–G–400.
2. FOR BOREHOLE LOCATIONS SEE DRAWING TLC–S–102.
3. THIS BOREHOLE LOG IS ONLY A PORTION OF A REPORT PREPARED BY GEOENGINEERS "TOTEM LAKE CONNECTOR PHASE 2 GEOTECHNICAL ENGINEERING SERVICES" DATED OCTOBER 2018.

THIS DRAWING HAS BEEN PREPARED FOR THE TOTEM LAKE CONNECTOR PROJECT. COWI, GEOENGINEERS, THEIR EMPLOYEES, SUBCONSULTANTS OR AGENTS ACCEPT NO RESPONSIBILITY FOR ANY OTHER USE.

CITY OF KIRKLAND
DEPARTMENT OF PUBLIC WORKS
123 FIFTH AVENUE KIRKLAND, WA 98033
(425) 587-3800 www.kirklandwa.gov

NO.	DATE	BY	APPR.	REVISION
0	2019/12/06	CHJS	DCO	100% ISSUE FOR BID

DEBRA C. OVERBAY STATE OF WASHINGTON 29247 REGISTERED PROFESSIONAL ENGINEER 12/11/19

COWI
GEOENGINEERS

D. OVERBAY	2019/12/06	DESIGNED BY: DATE
CHJS	2019/12/06	DRAWN BY: DATE
B. PSCHANDER	2019/12/06	CHECKED BY: DATE

CITY OF KIRKLAND
TOTEM LAKE CONNECTION

GEOTECHNICAL BOREHOLE 17

SHEET: TLC–G–417
SCALE: AS SHOWN
FILENAME: A088367–G–400–421.dwg

File: D:\Projectwise\COWI\d0301252\A088367-G-400-421.dwg Save Date: Nov 04, 2019 12:02 PM Saved By: CHJS
Date:11/26/18 Path:P:\0231090\GINT\0231090.GPJ DBLibrary:Library:GEOENGINEERS_DF_STD_US_JUNE_2017.GLB/GEIB_GEOTECH_STANDARD_IUF_NO_GW

Start Drilled 7/24/2018	End 7/24/2018	Total Depth (ft) 81	Logged By EAW Checked By HRP	Driller Geologic Drill Exploration, Inc.	Drilling Method Hollow-stem Auger
Surface Elevation (ft) 124.77 Vertical Datum NAVD88			Hammer Data Automatic 140 (lbs) / 30 (in) Drop	Drilling Equipment Diedrich D-50 Track Rig	
Easting (X) 1309783.85 Northing (Y) 261763.93			System Datum WA State Plane North NAD83 (feet)	See "Remarks" section for groundwater observed	
Notes:					

Elevation (feet)	Depth (feet)	Interval	Recovered (in)	Blows/foot	Collected Sample	Sample Name / Testing	Graphic Log	Group Classification	MATERIAL DESCRIPTION	Moisture Content (%)	Fines Content (%)	REMARKS
	0							TS	10 inches of topsoil			
								ML	Gray sandy silt with organic matter (very soft, wet)			Groundwater observed at 1 foot at time of drilling
		☒	12	12		1		SP-SM	Gray-brown fine to medium sand with silt (medium dense, wet)			
120	5	☒	12	10		2 MC				25		
		☒	14	12		3 SA				24	6	
115	10	☒	10	10		4			Grades to loose			Driller added mud to borehole
		☒	8	5		5 SA				7		
110	15	☒	8	4		6			Grades with occasional wood fragments			
								SP-SM	Brown medium to coarse sand with silt and gravel (medium dense, wet)			
105	20	☒	12	10		7 SA				18	10	
100	25	☒	10	17		8 MC		GC	Brown clayey fine to coarse gravel with sand and cobbles (medium dense, wet)	11		
95	30	☒	14	25		9 SA, AL		GM	Brown silty fine to coarse gravel with sand and cobbles (medium dense, wet)	21	29	AL (LL=40; PI=13)
90	35											

Note: See Figure A-1 for explanation of symbols.
Coordinates Data Source: Horizontal approximated based on Survey by Alliance Geomatics.
Vertical approximated based on Survey by Alliance Geomatics.

Log of Boring B-18

GEOENGINEERS

Project: Totem Lake Connector
Project Location: Kirkland, Washington
Project Number: 0231-090-01

Figure A-19
Sheet 1 of 3

Elevation (feet)	Depth (feet)	Interval	Recovered (in)	Blows/foot	Collected Sample	Sample Name / Testing	Graphic Log	Group Classification	MATERIAL DESCRIPTION	Moisture Content (%)	Fines Content (%)	REMARKS
85	35	☒	6	24		10						
								ML	Gray silt with sand and gravel (very stiff, wet)			
80	40	☒	12	26		11 MC, %F; AL				31	78	AL (LL-34; PI=10)
75	45	☒	18	29		12 MC				19		
								ML	Gray silt with lenses of organic matter (very stiff, wet)			
70	50	☒	18	21		13						
								SP-SM	Gray-brown fine to medium sand with silt, gravel and cobbles (medium dense, wet)			
65	55	☒	18	23		14						
								SP-SM	Gray fine to medium sand with silt and gravel (dense, wet)			
60	60	☒	12	65		15 SA				12	7	
55	65	☒	9	50/3"		16			Grades to very dense			
50	70	☒	12	50/6"		17 MC				9		2 feet of heave
								ML	Gray silt (hard, wet)			
45	75	☒	10	50/4"		18						

Log of Boring B-18 (continued)

GEOENGINEERS

Project: Totem Lake Connector
Project Location: Kirkland, Washington
Project Number: 0231-090-01

Figure A-19
Sheet 2 of 3

Elevation (feet)	Depth (feet)	Interval	Recovered (in)	Blows/foot	Collected Sample	Sample Name / Testing	Graphic Log	Group Classification	MATERIAL DESCRIPTION	Moisture Content (%)	Fines Content (%)	REMARKS
45	80	☒	10	50/5"		19			Grades with sand and gravel			

Log of Boring B-18 (continued)

GEOENGINEERS

Project: Totem Lake Connector
Project Location: Kirkland, Washington
Project Number: 0231-090-01

Figure A-19
Sheet 3 of 3

NOTES:

1. FOR BOREHOLE KEY SEE DRAWING TLC–G–400.
2. FOR BOREHOLE LOCATIONS SEE DRAWING TLC–S–102.
3. THIS BOREHOLE LOG IS ONLY A PORTION OF A REPORT PREPARED BY GEOENGINEERS "TOTEM LAKE CONNECTOR PHASE 2 GEOTECHNICAL ENGINEERING SERVICES" DATED OCTOBER 2018.

THIS DRAWING HAS BEEN PREPARED FOR THE TOTEM LAKE CONNECTOR PROJECT. COWI, GEOENGINEERS, THEIR EMPLOYEES, SUBCONSULTANTS OR AGENTS ACCEPT NO RESPONSIBILITY FOR ANY OTHER USE.

CITY OF KIRKLAND
DEPARTMENT OF PUBLIC WORKS
123 FIFTH AVENUE KIRKLAND, WA 98033
(425) 587-3800 www.kirklandwa.gov

NO.	DATE	BY	APPR.	REVISION
0	2019/12/06	CHJS	DCO	100% ISSUE FOR BID

DEBRA C. OVERBAY STATE OF WASHINGTON 29247 REGISTERED PROFESSIONAL ENGINEER

COWI
GEOENGINEERS

D. OVERBAY 2019/12/06
DESIGNED BY: DATE

CHJS 2019/12/06
DRAWN BY: DATE

B. PSCHANDER 2019/12/06
CHECKED BY: DATE

CITY OF KIRKLAND
TOTEM LAKE CONNECTION

GEOTECHNICAL BOREHOLE 18

SHEET: TLC–G–418
SCALE: AS SHOWN
FILENAME: A088367–G–400–421.dwg

File: D:\Projectwise\COWI\dt301252\A088367-G-400-421.dwg Save Date: Nov 04, 2019 12:02 PM Saved By: CHJS

Drilled	Start 10/11/2017	End 10/11/2017	Total Depth (ft) 71.25	Logged By MWB	Checked By HRP	Driller Geologic Drill Exploration, Inc.	Drilling Method Hollow-stem Auger

Hammer Data	Automatic 140 (lbs) / 30 (in) Drop	Drilling Equipment	Diedrich D-50 Track Rig
Surface Elevation (ft)	129.01	Top of Casing Elevation (ft)	128.54
Vertical Datum	NAVD88		
Easting (X)	1309780.43	Horizontal Datum	WA State Plane North NAD83 (feet)
Northing (Y)	261722.72		

DOE Well I.D.: BKP203
A 2 (in) well was installed on 10/11/2017 to a depth of 25 (ft). Well was developed on 10/11/2017.

Groundwater Date Measured	Depth to Water (ft)	Elevation (ft)
1/8/2018	2.33	126.21

Notes: Monitoring well installed to 25 feet in separate boring drilled 2 feet to the south.
Groundwater seepage encountered at 4½ feet at time of drilling.

FIELD DATA

Depth (feet)	Interval	Recovered (in)	Blows/foot	Collected Sample	Sample Name Testing	Water Level	Graphic Log	Group Classification	MATERIAL DESCRIPTION	Moisture Content (%)	Fines Content (%)
0								TS	6 inches topsoil		
								SM	Brown silty fine to medium sand with gravel and organic matter (loose, wet) (fill)		
5		4	5		1						
		6	2		2						
		12	3		3			SP-SM	Grayish brown fine to medium sand with silt (very loose, wet)		
10		18	2		4 SA					24	9
15		18	15		5				Becomes medium dense (2 feet of heave, driller added mud to borehole)		
20		18	17		6						
								SC	Brown clayey fine to coarse sand with gravel and cobbles (dense, wet)		
25		12	31		7 MC					23	
								ML	Brown and gray sandy silt with gravel (very stiff, wet)		
30		16	21		8 AL				AL (LL = 28; PI = 5)	22	
35											

WELL LOG

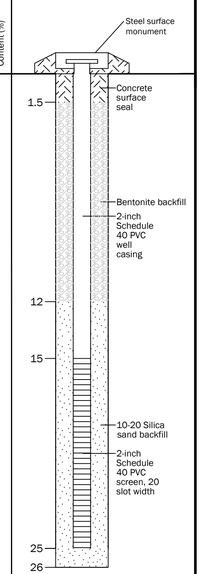

Note: See Figure A-1 for explanation of symbols.
Coordinates Data Source: Horizontal approximated based on Survey by Alliance Geomatics.
Vertical approximated based on Survey by Alliance Geomatics.

Log of Monitoring Well B-19

GEOENGINEERS

Project: Totem Lake Connector
Project Location: Kirkland, Washington
Project Number: 0231-090-01

Figure A-20
Sheet 1 of 2

FIELD DATA

Depth (feet)	Interval	Recovered (in)	Blows/foot	Collected Sample	Sample Name Testing	Water Level	Graphic Log	Group Classification	MATERIAL DESCRIPTION	Moisture Content (%)	Fines Content (%)
35		8	30		9						
40		18	30		10				Grades with lenses of organic matter		
45		16	25		11						
								ML	Gray silt (hard, wet)		
50		18	34		12 MC					29	
								SP-SM	Gray fine to medium sand with silt, gravel and cobbles (dense to very dense, wet)		
55		11	95/11"		13 MC					10	
									Driller added mud to borehole		
60		16	85/10"		14 SA					14	10
								SP	Gray fine to medium sand with gravel (very dense, wet)		
65		15	90/9"		15				(15 feet of heave)		
70		4	92/8"		16						

WELL LOG

Log of Monitoring Well B-19 (continued)

GEOENGINEERS

Project: Totem Lake Connector
Project Location: Kirkland, Washington
Project Number: 0231-090-01

Figure A-20
Sheet 2 of 2

NOTES:

1. FOR BOREHOLE KEY SEE DRAWING TLC–G–400.
2. FOR BOREHOLE LOCATIONS SEE DRAWING TLC–S–102.
3. THIS BOREHOLE LOG IS ONLY A PORTION OF A REPORT PREPARED BY GEOENGINEERS "TOTEM LAKE CONNECTOR PHASE 2 GEOTECHNICAL ENGINEERING SERVICES" DATED OCTOBER 2018.

THIS DRAWING HAS BEEN PREPARED FOR THE TOTEM LAKE CONNECTOR PROJECT. COWI, GEOENGINEERS, THEIR EMPLOYEES, SUBCONSULTANTS OR AGENTS ACCEPT NO RESPONSIBILITY FOR ANY OTHER USE.

CITY OF KIRKLAND
DEPARTMENT OF PUBLIC WORKS
123 FIFTH AVENUE KIRKLAND, WA 98033
(425) 587-3800 www.kirklandwa.gov

NO.	DATE	BY	APPR.	REVISION
0	2019/12/06	CHJS	DCO	100% ISSUE FOR BID

DEBRA C. OVERBAY STATE OF WASHINGTON 29247 REGISTERED PROFESSIONAL ENGINEER 12/6/19

COWI
GEOENGINEERS

D. OVERBAY	2019/12/06	DESIGNED BY: DATE
CHJS	2019/12/06	DRAWN BY: DATE
B. PSCHANDER	2019/12/06	CHECKED BY: DATE

CITY OF KIRKLAND
TOTEM LAKE CONNECTION

GEOTECHNICAL BOREHOLE 19

SHEET: TLC–G–419
SCALE: AS SHOWN
FILENAME: A088367–G–400–421.dwg

File: D:\Projectwise\COWI\dt301252\A088367-G-400-421.dwg Save Date: Nov 04, 2019 12:02 PM Saved By: CHJS
Date:3/13/18 PlotPt:0/0/0/

Start	End	Total Depth (ft)	81	Logged By	MWB	Checked By	HRP	Driller	Geologic Drill Exploration, Inc.	Drilling Method	Hollow-stem Auger
Drilled 10/12/2017	10/12/2017										

Surface Elevation (ft)	137.16	Hammer Data	Automatic 140 (lbs) / 30 (in) Drop	Drilling Equipment	Diedrich D-50 Track Rig
Vertical Datum	NAVD88				
Easting (X)	1309817.80	System Datum	WA State Plane North NAD83 (feet)	See "Remarks" section for groundwater observed	
Northing (Y)	261681.91				

Notes:

Elevation (feet)	Depth (feet)	Interval	Recovered (in)	Blows/foot	Collected Sample	Sample Name / Testing	Graphic Log	Group Classification	MATERIAL DESCRIPTION	Moisture Content (%)	Fines Content (%)	REMARKS
	0							TS	6 inches topsoil			
135		☒	3	19		1		SM	Dark brown silty fine to medium sand with gravel and organic matter (medium dense, moist) (fill)			
	5	☒	12	5		2		SM	Light orange-brown silty fine sand with gravel and organic matter (loose to medium dense, moist)			
130		☒	10	17		3						
	10	☒	10	25		4						
125								SP-SM	Brown fine to medium sand with silt and occasional gravel (medium dense, wet)			
	15	☒	18	12		5				22	6	Groundwater observed at 13½ feet at time of drilling Driller added mud to borehole
120												
	20	☒	18	16		6						
115								CL	Brown and gray sandy fine lean clay with gravel (stiff to very stiff, wet)			
	25	☒	17	16		7 MC				10		
110												
	30	☒	3	16		8 MC				10		
105												
								ML	Light orange-brown and gray silt with sand and gravel (very stiff, wet)			
	35											

Note: See Figure A-1 for explanation of symbols.
Coordinates Data Source: Horizontal approximated based on Survey by Alliance Geomatics.
Vertical approximated based on Survey by Alliance Geomatics.

Log of Boring B-20

GeoEngineers

Project: Totem Lake Connector
Project Location: Kirkland, Washington
Project Number: 0231-090-01

Figure A-21
Sheet 1 of 3

Elevation (feet)	Depth (feet)	Interval	Recovered (in)	Blows/foot	Collected Sample	Sample Name / Testing	Graphic Log	Group Classification	MATERIAL DESCRIPTION	Moisture Content (%)	Fines Content (%)	REMARKS
100	35	☒	10	31		9 AL				28		AL (LL = 29; PI = 1)
	40	☒	18	27		10 MC				21		
95								CL	Gray lean clay with sand and occasional gravel (very stiff, wet)			
	45	☒	18	19		11						
90								CL	Orange-brown sandy lean clay with gravel (very stiff, wet)			
	50	☒	12	30		12						
85								SM	Brownish gray silty fine to medium sand with gravel and cobbles (very dense, wet)			
	55	☒	6	50/6"		13 MC				12		
80												
	60	☒	12	50/6"		14						2 feet of heave
75								SP-SM	Gray fine to medium sand with silt, gravel and occasional cobbles (very dense, wet)			
	65	☒	17	50/5"		15 SA				14	8	2 feet of heave
70												
	70	☒	16	50/4"		16						
65												
	75	☒	18	61		17						2 feet of heave

Log of Boring B-20 (continued)

GeoEngineers

Project: Totem Lake Connector
Project Location: Kirkland, Washington
Project Number: 0231-090-01

Figure A-21
Sheet 2 of 3

Elevation (feet)	Depth (feet)	Interval	Recovered (in)	Blows/foot	Collected Sample	Sample Name / Testing	Graphic Log	Group Classification	MATERIAL DESCRIPTION	Moisture Content (%)	Fines Content (%)	REMARKS
80												
	80	☒	12	50/6"		18						

Log of Boring B-20 (continued)

GeoEngineers

Project: Totem Lake Connector
Project Location: Kirkland, Washington
Project Number: 0231-090-01

Figure A-21
Sheet 3 of 3

NOTES:

1. FOR BOREHOLE KEY SEE DRAWING TLC–G–400.
2. FOR BOREHOLE LOCATIONS SEE DRAWING TLC–S–102.
3. THIS BOREHOLE LOG IS ONLY A PORTION OF A REPORT PREPARED BY GEOENGINEERS "TOTEM LAKE CONNECTOR PHASE 2 GEOTECHNICAL ENGINEERING SERVICES" DATED OCTOBER 2018.

THIS DRAWING HAS BEEN PREPARED FOR THE TOTEM LAKE CONNECTOR PROJECT. COWI, GEOENGINEERS, THEIR EMPLOYEES, SUBCONSULTANTS OR AGENTS ACCEPT NO RESPONSIBILITY FOR ANY OTHER USE.

CITY OF KIRKLAND
DEPARTMENT OF PUBLIC WORKS
123 FIFTH AVENUE KIRKLAND, WA 98033
(425) 587-3800 www.kirklandwa.gov

NO.	DATE	BY	APPR.	REVISION
0	2019/12/06	CHJS	DCO	100% ISSUE FOR BID

DEBRA C. OVERBAY STATE OF WASHINGTON 29247 REGISTERED PROFESSIONAL ENGINEER

COWI
GeoEngineers

D. OVERBAY	2019/12/06	DESIGNED BY: DATE
CHJS	2019/12/06	DRAWN BY: DATE
B. PSCHANDER	2019/12/06	CHECKED BY: DATE

CITY OF KIRKLAND
TOTEM LAKE CONNECTION

GEOTECHNICAL BOREHOLE 20

SHEET: TLC–G–420
SCALE: AS SHOWN
FILENAME: A088367–G–400–421.dwg

File: D:\Projectwise\COW\d0301252\A088367-G-400-421.dwg Save Date: Nov 04, 2019 12:02 PM Saved By: CHJS

Date Excavated 11/7/2017	Total Depth (ft) 9.5	Logged By CRG Checked By HRP	Excavator Kelly's Excavating, Inc. Equipment Komatsu 140 Backhoe	See "Remarks" section for groundwater observed See "Remarks" section for caving observed
Surface Elevation (ft) 147.5 Vertical Datum NAVD88		Easting (X) 1309571 Northing (Y) 261354		Coordinate System WA State Plane North Horizontal Datum NAD83 (feet)

Elevation (feet)	Depth (feet)	Sample Name / Testing	Graphic Log	Group Classification	MATERIAL DESCRIPTION	Moisture Content (%)	Fines Content (%)	REMARKS
147				TS	Topsoil 12 inches thick			
	1			SP-SM	Brown fine to medium sand with silt and occasional organic matter (loose, moist)			
146								
	2							
145								
	3							
144								
	4	1 SA OC				9	11	Caving observed at 4 to 7 feet below ground surface OC = 1%; CEC
143								
	5							
142								
	6	2						Groundwater seepage observed at 6 feet below ground surface following infiltration test
141								
	7							
140								
	8	3		ML	Light brown and orange-brown silt with sand and gravel (stiff, moist to wet)			
139								
	9	4						
138								

Test pit initially excavated to 4 feet for infiltration test; test pit completed at 9½ feet below ground surface following infiltration test

Notes: See Figure A-1 for explanation of symbols.
The depths on the test pit logs are based on an average of measurements across the test pit and should be considered accurate to ½ foot.
Coordinates Data Source: Horizontal approximated based on topographic map. Vertical approximated based on topographic map.

Log of Test Pit TP-1

GeoEngineers

Project: Totem Lake Connector
Project Location: Kirkland, Washington
Project Number: 0231-090-01

Figure A-22
Sheet 1 of 1

Date Excavated 11/8/2017	Total Depth (ft) 9.5	Logged By CRG Checked By HRP	Excavator Kelly's Excavating, Inc. Equipment Komatsu 140 Backhoe	Groundwater not observed Caving not observed
Surface Elevation (ft) 145 Vertical Datum NAVD88		Easting (X) 1309728 Northing (Y) 261533		Coordinate System WA State Plane North Horizontal Datum NAD83 (feet)

Elevation (feet)	Depth (feet)	Sample Name / Testing	Graphic Log	Group Classification	MATERIAL DESCRIPTION	Moisture Content (%)	Fines Content (%)	REMARKS
				SOD	6 inches sod and topsoil			
				TS				
144	1			SM	Brown silty fine to medium sand with gravel and asphalt fragments (loose, moist) (fill)			
143	2							
142	3				Asphalt debris at 3 feet			
141	4	1 SA OC				8	16	OC = 2%; CEC
140	5			ML	Brown silt with sand and gravel (stiff, moist)			
139	6	2		SM	Dark orange-brown silty fine to medium sand with organic matter (medium dense, moist)			
138	7							
137	8	3						
136	9	4		ML	Brownish gray silt with sand (stiff, moist)			

Test pit initially excavated to 4 feet for infiltration test; test pit completed at 9½ feet below ground surface following infiltration test

Notes: See Figure A-1 for explanation of symbols.
The depths on the test pit logs are based on an average of measurements across the test pit and should be considered accurate to ½ foot.
Coordinates Data Source: Horizontal approximated based on topographic map. Vertical approximated based on topographic map.

Log of Test Pit TP-2

GeoEngineers

Project: Totem Lake Connector
Project Location: Kirkland, Washington
Project Number: 0231-090-01

Figure A-23
Sheet 1 of 1

NOTES:

1. FOR BOREHOLE KEY SEE DRAWING TLC–G–400.
2. FOR TEST PIT LOCATIONS SEE GEOTECHNICAL REPORT.
3. THIS BOREHOLE LOG IS ONLY A PORTION OF A REPORT PREPARED BY GEOENGINEERS "TOTEM LAKE CONNECTOR PHASE 2 GEOTECHNICAL ENGINEERING SERVICES" DATED OCTOBER 2018.

THIS DRAWING HAS BEEN PREPARED FOR THE TOTEM LAKE CONNECTOR PROJECT. COWI, GEOENGINEERS, THEIR EMPLOYEES, SUBCONSULTANTS OR AGENTS ACCEPT NO RESPONSIBILITY FOR ANY OTHER USE.

CITY OF KIRKLAND
DEPARTMENT OF PUBLIC WORKS
123 FIFTH AVENUE KIRKLAND, WA 98033
(425) 587-3800 www.kirklandwa.gov

NO.	DATE	BY	APPR.	REVISION
0	2019/12/06	CHJS	DCO	100% ISSUE FOR BID

DEBRA C. OVERBAY STATE OF WASHINGTON 29247 REGISTERED PROFESSIONAL ENGINEER

COWI
GeoEngineers

D. OVERBAY 2019/12/06 — DESIGNED BY: DATE
CHJS 2019/12/06 — DRAWN BY: DATE
B. PSCHANDER 2019/12/06 — CHECKED BY: DATE

CITY OF KIRKLAND
TOTEM LAKE CONNECTION

GEOTECHNICAL TEST PITS

SHEET: TLC–G–421
SCALE: AS SHOWN
FILENAME: A088367–G–400–421.dwg

File: D:\Projectwise\COWI\dt301252\A088367-G-400-421.dwg Save Date: Nov 04, 2019 12:02 PM Saved By: CHJS