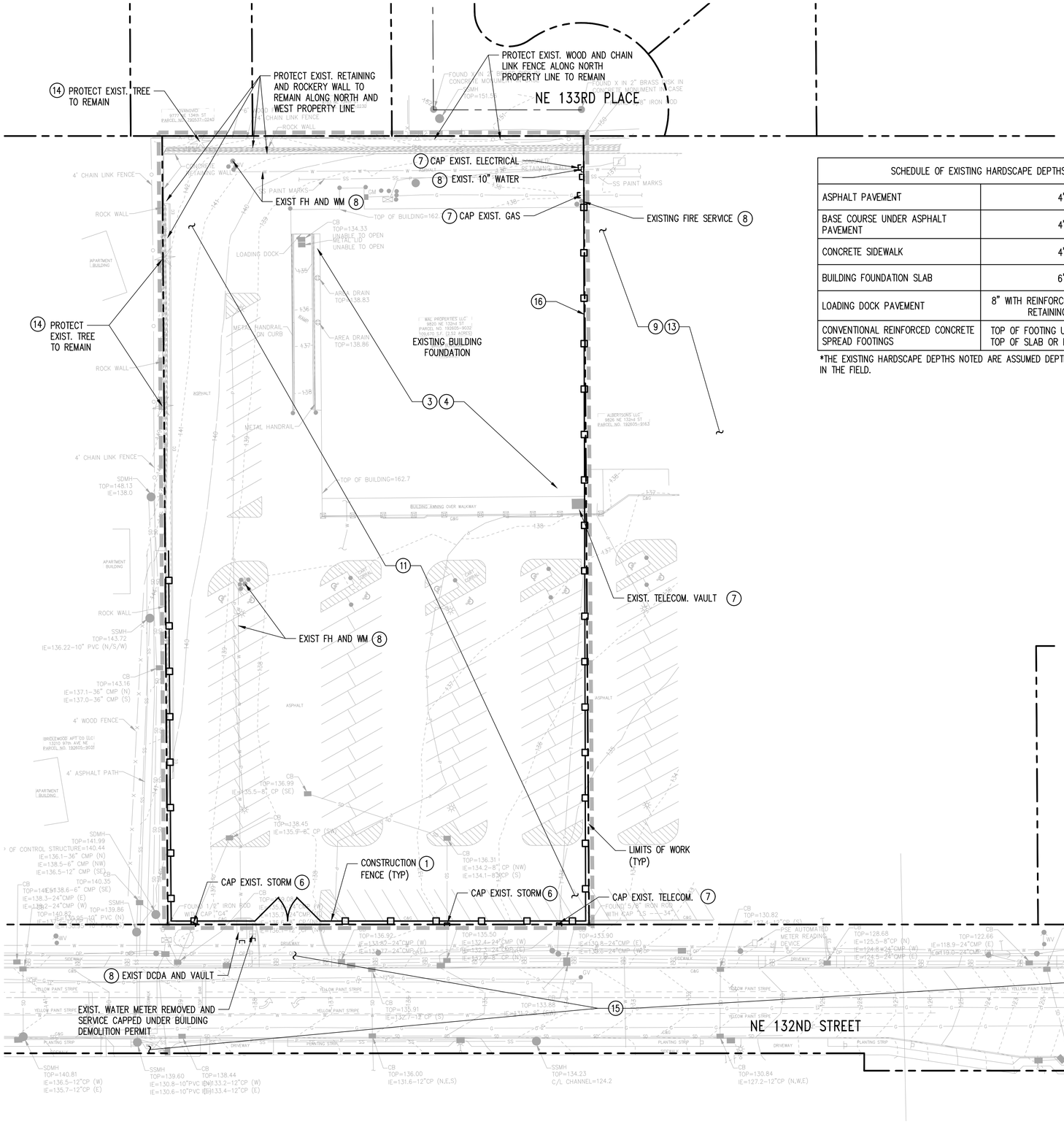

SCHEDULE OF EXISTING HARDSCAPE DEPTHS*	
ASPHALT PAVEMENT	4"
BASE COURSE UNDER ASPHALT PAVEMENT	4"
CONCRETE SIDEWALK	4"
BUILDING FOUNDATION SLAB	6"
LOADING DOCK PAVEMENT	8" WITH REINFORCED CONCRETE AT RETAINING WALLS
CONVENTIONAL REINFORCED CONCRETE SPREAD FOOTINGS	TOP OF FOOTING UP TO 30" BELOW TOP OF SLAB OR PAVING ELEMENTS

*THE EXISTING HARDSCAPE DEPTHS NOTED ARE ASSUMED DEPTHS AND MAY VARY IN THE FIELD.

DEMOLITION NOTES:

1. EXISTING SITE CONSTRUCTION FENCE WILL BE REMOVED BY OWNER PRIOR TO NOTICE TO PROCEED. CONTRACTOR SHALL INSTALL AND FIELD LOCATE CONSTRUCTION FENCING AND SIGNAGE AND TAKE NECESSARY PRECAUTIONS TO PREVENT UNAUTHORIZED ACCESS INTO THE DEMOLITION AREA.

2. CONTRACTOR SHALL FIELD VERIFY THE LOCATION OF ALL UTILITIES PRIOR TO DEMOLITION OR CONSTRUCTION ACTIVITIES.

3. EXISTING BUILDING DEMOLISHED, UNDER SEPARATE PERMIT.

4. CONTRACTOR SHALL DEMOLISH EXISTING BUILDING FOUNDATION AND OBTAIN NECESSARY PERMITS FOR DEMOLITION ACTIVITIES. SEE SCHEDULE OF EXISTING HARDSCAPE DEPTHS FOR FOUNDATION DEPTH.

5. CONTRACTOR SHALL OBTAIN AND PAY FOR NECESSARY PERMITS TO EXECUTE DEMOLITION, INCLUDING PERMIT TO USE PUBLIC WATER SUPPLY FOR DUST SUPPRESSION.

6. CONTRACTOR SHALL CAP EXISTING STORM SERVICE TO MEET CITY OF KIRKLAND STANDARDS AND SPECIFICATIONS.

7. CONTRACTOR SHALL COORDINATE WITH ELECTRICAL, GAS AND TELECOMMUNICATIONS UTILITY OWNER'S TO RETIRE AND REMOVE EXISTING SERVICES PRIOR TO DEMOLITION.

8. EXISTING PRIVATE FIRE HYDRANT AND APPURTENCES, AND METERS SHALL BE RETIRED UNDER SEPARATE NUD PERMIT. SEE NUD WATER AND SEWER PERMIT PLANS FOR DEMOLTION

9. CONTRACTOR SHALL PROTECT AND MAINTAIN UNINTERRUPTED UTILITY SERVICE TO NEIGHBORING PROPERTIES AND BUILDINGS DURING DEMOLITION AND CONSTRUCTION ACTIVITIES. CONTRACTOR SHALL COORDINATE INTERIM MEASURES WITH AFFECTED PARTIES.

10. SURFACE AND BELOW GRADE IMPROVEMENTS TO REMAIN SHALL BE REPLACED/ REPAIRED AT CONTRACTOR'S EXPENSE IF DAMAGED DURING DEMOLITION AND CONSTRUCTION ACTIVITIES.

11. EXISTING ABOVE AND BELOW GRADE SURFACE IMPROVEMENTS AND UTILITIES WITHIN THE PROPERTY ARE TO BE DEMOLISHED, UNLESS OTHERWISE NOTED. SEE SCHEDULE OF EXISTING HARDSCAPE DEPTHS.

12. CONTRACTOR SHALL PROTECT EXISTING MONUMENTS/PROPERTY CORNER STAKES ON ADJACENT PROPERTIES AND RIGHT-OF-WAY, AND SHALL REPLACE TO CITY AND STATE STANDARDS IF DISTURBED.

13. CONTRACTOR SHALL PROTECT ADJACENT BUILDINGS, AND MAINTAIN PEDESTRIAN AND VEHICULAR ACCESS TO ADJACENT PROPERTIES DURING DEMOLITION AND CONSTRUCTION.

14. CONTRACTOR SHALL PROVIDE TREE PROTECTION PER COK PRE-APPROVED PLAN CK-R.49 FOR EXISTING TREES TO REMAIN. SEE LANDSCAPE PLANS FOR ADDITIONAL TREE PROTECTION DETAILS AND REQUIREMENTS

15. SEE TRAFFIC SIGNAL PLANS AND SHEETS C8.0-C8.3 FOR RIGHT OF WAY FRONTAGE IMPROVEMENTS LIMITS OF WORK AND DEMOLITION.

16. CONTRACTOR SHALL PROTECT EXISTING GOODWILL WALL AND FOOTING TO REMAIN THAT IS ADJACENT TO THE RITE-AID FOUNDATION ALONG EAST PROPERTY LINE. CONTRACTOR SHALL SURVEY AND DOCUMENT EXISTING CONDITION OF GOODWILL WALL AND MONITOR FOR MOVEMENT DURING DEMOLTION AND CONSTRUCTION ACTIVITIES.

LEGEND

- PROPERTY LINE/ ROW LINE
- CONSTRUCTION FENCE
- LIMITS OF WORK

Call 811 two business days before you dig

TCA
ARCHITECTURE + PLANNING + DESIGN
6211 ROOSEVELT WAY NORTHEAST
SEATTLE, WA 98115
tel: (206) 522-3830
fax: (206) 522-2456

kpff
1601 5th Avenue, Suite 1600
Seattle, WA 98101
206.622.5822
www.kpff.com

JEREMY S. FRIEDLIS, STATE OF WASHINGTON, 39847, REGISTERED PROFESSIONAL ENGINEER
8/10/2020

BID SET

No.	Description	Date:
2	ADDENDUM # 2	8/10/20

Project Title:

FIRE STATION 24
City of Kirkland
Kirkland, Washington

Sheet Title:

DEMOLITION PLAN

Scale: AS NOTED
Project No. : 1700011
Date : JULY 21, 2020

Sheet Number :

2 **C2.0**

Z:\1700001-1700999\1700011 (Kirkland Fire Sta 24)\CADD\Design\CD\C2.DWG-24 DEMO.dwg
Aug 10, 2020 - 11:09am CharlieC

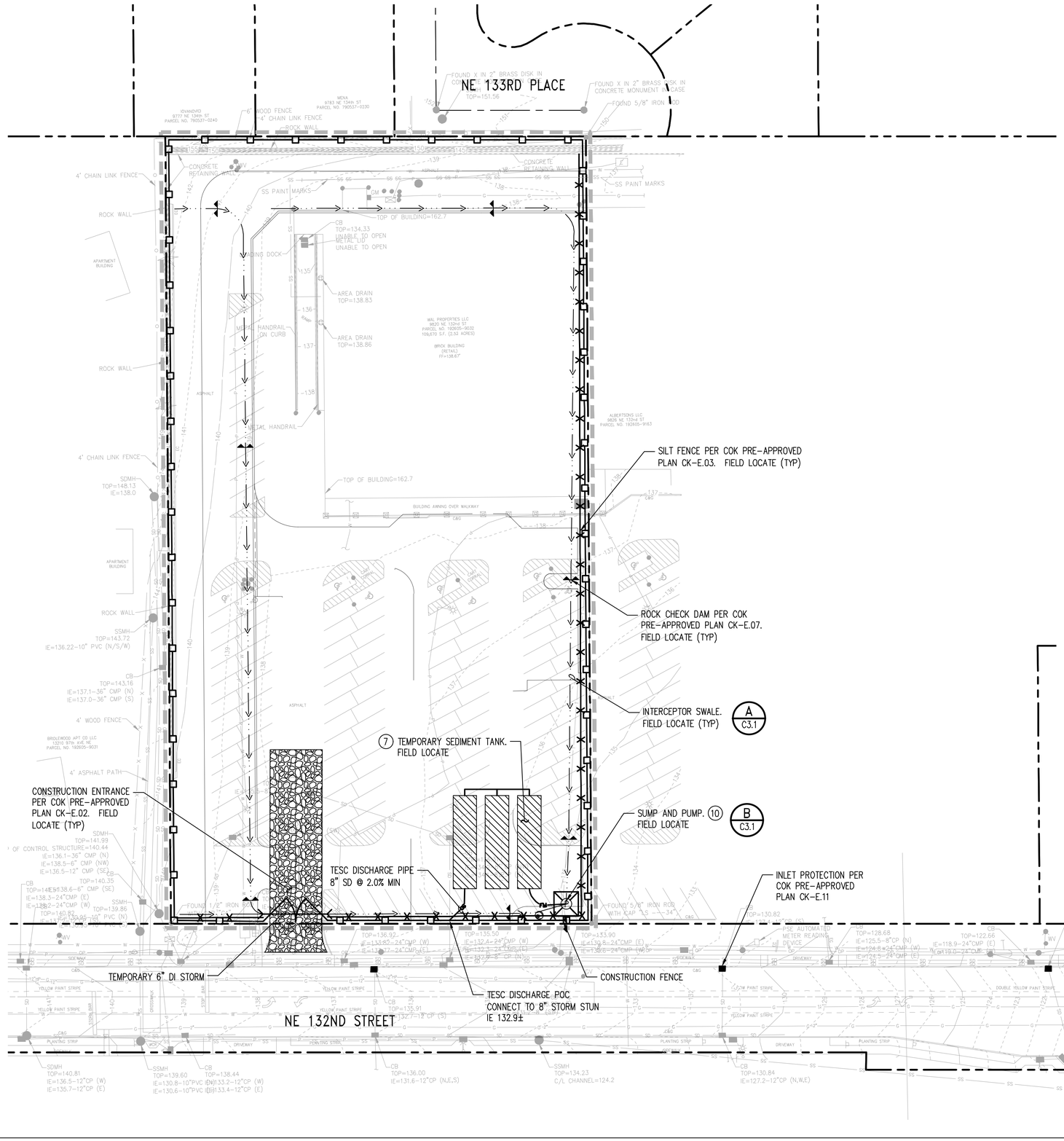

TESC NOTES:

1. THE CONTRACTOR SHALL PROVIDE AND MAINTAIN TEMPORARY EROSION CONTROL AND SEDIMENT COLLECTION FACILITIES TO ENSURE THAT SEDIMENT-LADEN WATER DOES NOT ENTER THE NATURAL OR PUBLIC DRAINAGE SYSTEM PER COK STD SPECS SECTION 8-01. AS CONSTRUCTION PROGRESSES AND UNEXPECTED (SEASONAL) CONDITIONS DICTATE, ADDITIONAL CONTROL FACILITIES MAY BE REQUIRED. DURING THE COURSE OF CONSTRUCTION IT SHALL BE THE OBLIGATION AND RESPONSIBILITY OF THE CONTRACTOR TO ADDRESS ANY NEW CONDITIONS THAT MAY BE CREATED BY THE CONTRACTOR'S ACTIVITIES AND TO PROVIDE ADDITIONAL FACILITIES THAT MAY BE NEEDED TO PROTECT ADJACENT PROPERTIES.

2. CONTRACTOR SHALL PROVIDE CONSTRUCTION FENCING, SCREENING, SIGNAGE, AND BARRIERS TO PREVENT UNAUTHORIZED ACCESS INTO CONSTRUCTION AREA.

3. NO TEMPORARY DISCHARGES TO SANITARY SEWER ARE PROPOSED FOR THIS PROJECT. ANY FUTURE WASTEWATER DISCHARGES TO THE SANITARY SEWER MUST BE APPROVED BY THE CITY OF KIRKLAND AND NORTHSHORE UTILITY DISTRICT, AND MUST DISCHARGE TO A PRIVATE SIDE SEWER ON SITE, TO BE IDENTIFIED IN THE FIELD.

4. ANY SITE DEWATERING (E.G. GROUNDWATER) MUST BE DISCHARGED TO THE PUBLIC DRAINAGE SYSTEM VIA THE STORM DRAIN POINT OF DISCHARGE.

5. THE CONTRACTOR SHALL PROVIDE TEMPORARY VEHICULAR AND PEDESTRIAN TRAFFIC CONTROL TO ROUTE TRAFFIC AROUND THE PROJECT SIDE, AS REQUIRED. CONTRACTOR SHALL MAINTAIN FIRE ACCESS TO ALL BUILDINGS AND PROJECT AREA.

6. CONTRACTOR SHALL COORDINATE WITH THE CITY OF KIRKLAND PRIOR TO DISCHARGING CONSTRUCTION WATER FROM THIS SITE. CONTRACTOR IS RESPONSIBLE FOR OBTAINING DISCHARGE AUTHORIZATION LETTER AND SIDE SEWER PERMIT FOR TEMPORARY DEWATERING, AS REQUIRED BY THE CITY. SIDE SEWER PERMIT FOR TEMPORARY DEWATERING SHALL BE OBTAINED PRIOR TO DRAINAGE PERMIT APPROVAL.

7. FIELD LOCATE SEDIMENT TANK (BAKER TANK OR APPROVED EQUAL). THE SEDIMENT TANK (53,229 GALLON TOTAL CAPACITY) SHOWN IS BASED ON THE 2 YEAR 24-HOUR DESIGN STORM PEAK VOLUME FOR A DISTURBED SITE AREA OF 2.52 ACRES WITHIN THE LIMITS OF CONSTRUCTION. THE CONTRACTOR IS RESPONSIBLE FOR ADDING ADDITIONAL SEDIMENT TANKS SHOULD THE DISTURBED AREA INCREASE. CONTRACTOR SHALL MONITOR DISCHARGE FLOW AND WATER QUALITY OF DISCHARGE INTO THE COK STORM DRAINAGE MAIN AND INCLUDE FILTERS WITHIN THE BAKER TANKS AS REQUIRED TO MEET THE CITY OF KIRKLAND AND WASHINGTON STATE DEPARTMENT OF ECOLOGY TURBIDITY DISCHARGE REQUIREMENTS.

8. A CERTIFIED EROSION AND SEDIMENT CONTROL LEAD SHALL BE PRESENT ON-SITE OR BE ON-CALL AT ALL TIMES.

9. THE CONTRACTOR SHALL LOCATE AND PROVIDE A CONCRETE WASHOUT FACILITY IN ACCORDANCE WITH THE CITY OF KIRKLAND REQUIREMENTS. WASHOUT FACILITY SHALL NOT BE LOCATED IN AN AREA THAT RECEIVES SURFACE WATER RUNOFF AND SHALL NOT BE LOCATED WITHIN 50 FEET OF A DITCH OR CONNECTION TO THE STORM DRAIN SYSTEM.

10. PUMP LOCATION SHOWN FOR REFERENCE ONLY. CONTRACTOR SHALL SIZE AND FIELD LOCATE PUMP.

11. PRIOR TO CONSTRUCTION CONTRACTOR SHALL COORDINATE WITH THE CITY OF KIRKLAND TO TRANSFER WASHINGTON STATE DEPARTMENT OF ECOLOGY NOTICE OF INTENT PERMIT COVERAGE TO THE CONTRACTOR AND CONTRACTOR SHALL BE RESPONSIBLE FOR ALL FEES TO TRANSFER PERMIT.

LEGEND

- PROPERTY LINE/ ROW LINE
- CONSTRUCTION FENCE
- SILT FENCE
- FORCE MAIN
- LIMITS OF WORK
- SEDIMENT TANK
- STABILIZED CONSTRUCTION ENTRANCE
- SUMP AND PUMP
- INTERCEPTOR SWALE
- TRIANGULAR SILT DIKE
- STORM INLET PROTECTION

Call 811 two business days before you dig

TCA
ARCHITECTURE + PLANNING + DESIGN
6211 ROOSEVELT WAY NORTHEAST
SEATTLE, WA 98115
tel: (206) 522-3830
fax: (206) 522-2456

kpff
1601 5th Avenue, Suite 1600
Seattle, WA 98101
206.622.5822
www.kpff.com

JEREMY S. FRIEDS, STATE OF WASHINGTON, 35847, REGISTERED PROFESSIONAL ENGINEER
8/10/2020

BID SET

No.	Description	Date:
2	ADDENDUM # 2	8/10/20

Project Title:

FIRE STATION 24
City of Kirkland
Kirkland, Washington

Sheet Title:

TESC PLAN

Scale: **AS NOTED**
Project No. **1700011**
Date : **JULY 21, 2020**

Sheet Number :
2
C3.0

Z:\1700001-1700999\1700011 (Kirkland Fire Sta 24)\CADD\Design\C3\C3.0-KFS-24 ESC.dwg
Aug 10, 2020 - 10:56am teresad

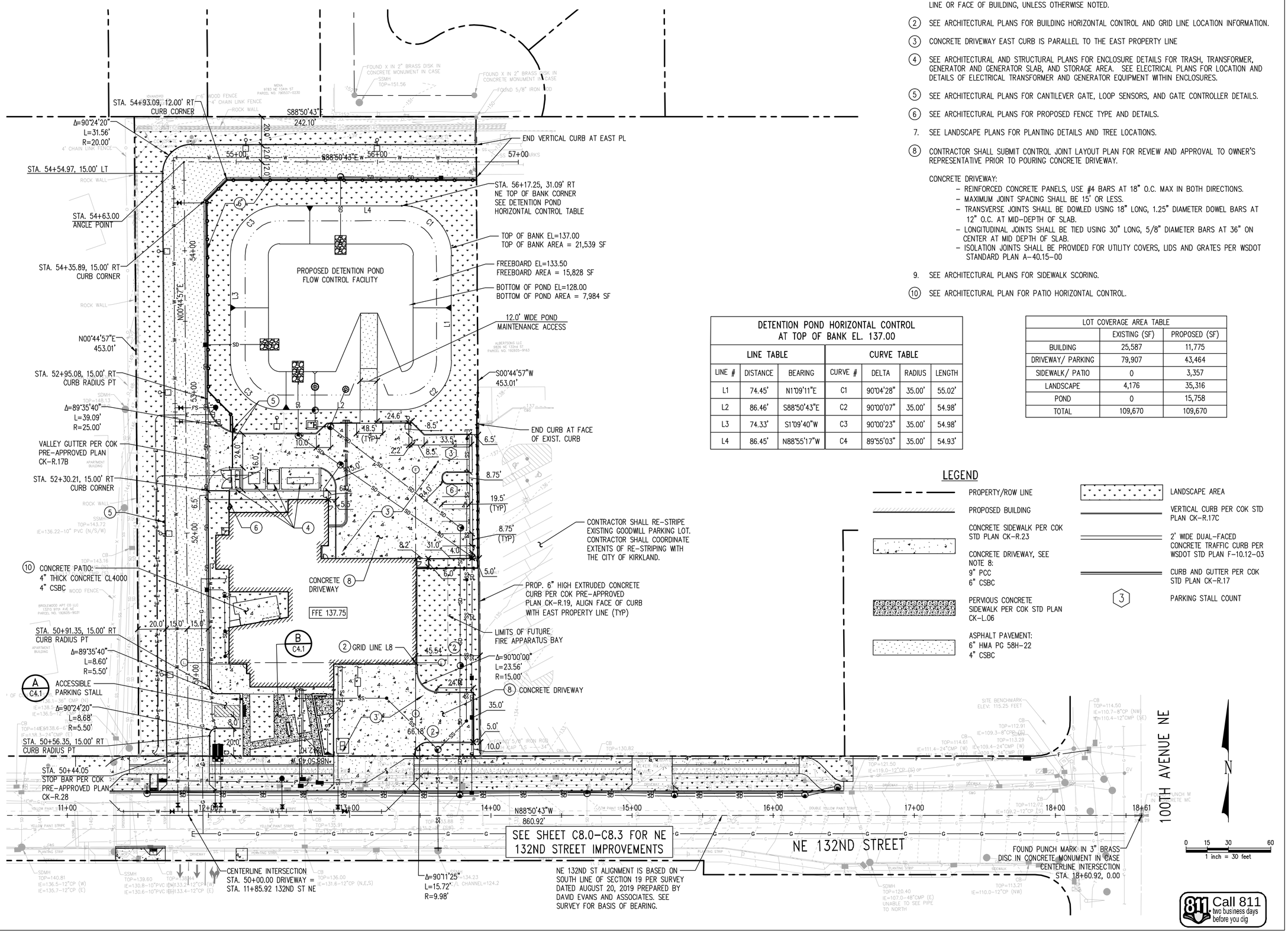

HORIZONTAL CONTROL AND PAVING NOTES:

1. ALL DIMENSIONS ARE TO THE FACE OF CURB, EDGE OF PAVEMENT, CENTERLINE ALIGNMENT, PROPERTY LINE OR FACE OF BUILDING, UNLESS OTHERWISE NOTED.
2. SEE ARCHITECTURAL PLANS FOR BUILDING HORIZONTAL CONTROL AND GRID LINE LOCATION INFORMATION.
3. CONCRETE DRIVEWAY EAST CURB IS PARALLEL TO THE EAST PROPERTY LINE
4. SEE ARCHITECTURAL AND STRUCTURAL PLANS FOR ENCLOSURE DETAILS FOR TRASH, TRANSFORMER, GENERATOR AND GENERATOR SLAB, AND STORAGE AREA. SEE ELECTRICAL PLANS FOR LOCATION AND DETAILS OF ELECTRICAL TRANSFORMER AND GENERATOR EQUIPMENT WITHIN ENCLOSURES.
5. SEE ARCHITECTURAL PLANS FOR CANTILEVER GATE, LOOP SENSORS, AND GATE CONTROLLER DETAILS.
6. SEE ARCHITECTURAL PLANS FOR PROPOSED FENCE TYPE AND DETAILS.
7. SEE LANDSCAPE PLANS FOR PLANTING DETAILS AND TREE LOCATIONS.
8. CONTRACTOR SHALL SUBMIT CONTROL JOINT LAYOUT PLAN FOR REVIEW AND APPROVAL TO OWNER'S REPRESENTATIVE PRIOR TO POURING CONCRETE DRIVEWAY.

   CONCRETE DRIVEWAY:
   - REINFORCED CONCRETE PANELS, USE #4 BARS AT 18" O.C. MAX IN BOTH DIRECTIONS.
   - MAXIMUM JOINT SPACING SHALL BE 15' OR LESS.
   - TRANSVERSE JOINTS SHALL BE DOWLED USING 18" LONG, 1.25" DIAMETER DOWEL BARS AT 12" O.C. AT MID-DEPTH OF SLAB.
   - LONGITUDINAL JOINTS SHALL BE TIED USING 30" LONG, 5/8" DIAMETER BARS AT 36" ON CENTER AT MID DEPTH OF SLAB.
   - ISOLATION JOINTS SHALL BE PROVIDED FOR UTILITY COVERS, LIDS AND GRATES PER WSDOT STANDARD PLAN A-40.15-00
9. SEE ARCHITECTURAL PLANS FOR SIDEWALK SCORING.
10. SEE ARCHITECTURAL PLAN FOR PATIO HORIZONTAL CONTROL.

DETENTION POND HORIZONTAL CONTROL AT TOP OF BANK EL. 137.00

LINE TABLE			CURVE TABLE			
LINE #	DISTANCE	BEARING	CURVE #	DELTA	RADIUS	LENGTH
L1	74.45'	N1°09'11"E	C1	90°04'28"	35.00'	55.02'
L2	86.46'	S88°50'43"E	C2	90°00'07"	35.00'	54.98'
L3	74.33'	S1°09'40"W	C3	90°00'23"	35.00'	54.98'
L4	86.45'	N88°55'17"W	C4	89°55'03"	35.00'	54.93'

LOT COVERAGE AREA TABLE

	EXISTING (SF)	PROPOSED (SF)
BUILDING	25,587	11,775
DRIVEWAY/ PARKING	79,907	43,464
SIDEWALK/ PATIO	0	3,357
LANDSCAPE	4,176	35,316
POND	0	15,758
TOTAL	109,670	109,670

LEGEND

- PROPERTY/ROW LINE
- PROPOSED BUILDING
- CONCRETE SIDEWALK PER COK STD PLAN CK-R.23
- CONCRETE DRIVEWAY, SEE NOTE 8: 9" PCC 6" CSBC
- PERVIOUS CONCRETE SIDEWALK PER COK STD PLAN CK-L.06
- ASPHALT PAVEMENT: 6" HMA PG 58H-22 4" CSBC
- LANDSCAPE AREA
- VERTICAL CURB PER COK STD PLAN CK-R.17C
- 2' WIDE DUAL-FACED CONCRETE TRAFFIC CURB PER WSDOT STD PLAN F-10.12-03
- CURB AND GUTTER PER COK STD PLAN CK-R.17
- (3) PARKING STALL COUNT

TCA
ARCHITECTURE + PLANNING + DESIGN
6211 ROOSEVELT WAY NORTHEAST
SEATTLE, WA 98115
tel: (206) 522-3830
fax: (206) 522-2456

kpff
1601 5th Avenue, Suite 1600
Seattle, WA 98101
206.622.5822
www.kpff.com

JEREMY S. FRIEDS STATE OF WASHINGTON 50847 REGISTERED PROFESSIONAL ENGINEER
8/10/2020

BID SET

No.	Description	Date:
2	ADDENDUM # 2	8/10/20

Project Title:

FIRE STATION 24
City of Kirkland
Kirkland, Washington

Sheet Title:

HORIZONTAL CONTROL AND PAVING PLAN

Scale: AS NOTED
Project No. 1700011
Date : JULY 21, 2020

Sheet Number :

2 **C4.0**

Z:\1700001-1700999\1700011 (Kirkland Fire Sta 24)\CADD\Design\C0\C4.0KFS-24 HC.dwg
Aug 10, 2020 - 10:57am teresad

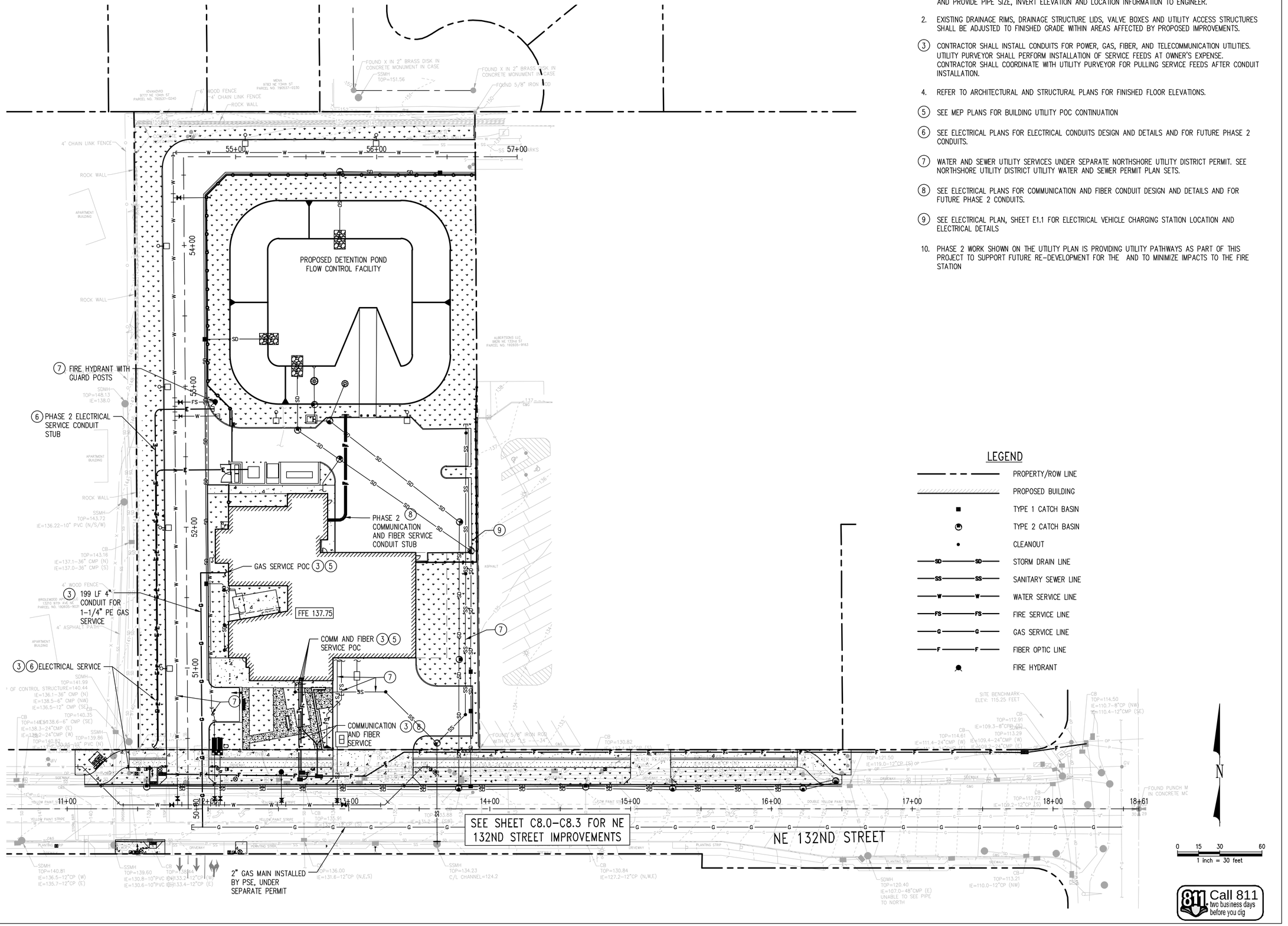

UTILITY NOTES:

1. PRIOR TO ANY SITE CONSTRUCTION CONTRACTOR SHALL POT HOLE UTILITIES AT POINTS OF CONNECTION AND PROVIDE PIPE SIZE, INVERT ELEVATION AND LOCATION INFORMATION TO ENGINEER.
2. EXISTING DRAINAGE RIMS, DRAINAGE STRUCTURE LIDS, VALVE BOXES AND UTILITY ACCESS STRUCTURES SHALL BE ADJUSTED TO FINISHED GRADE WITHIN AREAS AFFECTED BY PROPOSED IMPROVEMENTS.
3. CONTRACTOR SHALL INSTALL CONDUITS FOR POWER, GAS, FIBER, AND TELECOMMUNICATION UTILITIES. UTILITY PURVEYOR SHALL PERFORM INSTALLATION OF SERVICE FEEDS AT OWNER'S EXPENSE. CONTRACTOR SHALL COORDINATE WITH UTILITY PURVEYOR FOR PULLING SERVICE FEEDS AFTER CONDUIT INSTALLATION.
4. REFER TO ARCHITECTURAL AND STRUCTURAL PLANS FOR FINISHED FLOOR ELEVATIONS.
5. SEE MEP PLANS FOR BUILDING UTILITY POC CONTINUATION
6. SEE ELECTRICAL PLANS FOR ELECTRICAL CONDUITS DESIGN AND DETAILS AND FOR FUTURE PHASE 2 CONDUITS.
7. WATER AND SEWER UTILITY SERVICES UNDER SEPARATE NORTHSHORE UTILITY DISTRICT PERMIT. SEE NORTHSHORE UTILITY DISTRICT UTILITY WATER AND SEWER PERMIT PLAN SETS.
8. SEE ELECTRICAL PLANS FOR COMMUNICATION AND FIBER CONDUIT DESIGN AND DETAILS AND FOR FUTURE PHASE 2 CONDUITS.
9. SEE ELECTRICAL PLAN, SHEET E1.1 FOR ELECTRICAL VEHICLE CHARGING STATION LOCATION AND ELECTRICAL DETAILS
10. PHASE 2 WORK SHOWN ON THE UTILITY PLAN IS PROVIDING UTILITY PATHWAYS AS PART OF THIS PROJECT TO SUPPORT FUTURE RE-DEVELOPMENT FOR THE AND TO MINIMIZE IMPACTS TO THE FIRE STATION

LEGEND

- PROPERTY/ROW LINE
- PROPOSED BUILDING
- TYPE 1 CATCH BASIN
- TYPE 2 CATCH BASIN
- CLEANOUT
- SD — STORM DRAIN LINE
- SS — SANITARY SEWER LINE
- W — WATER SERVICE LINE
- FS — FIRE SERVICE LINE
- G — GAS SERVICE LINE
- F — FIBER OPTIC LINE
- FIRE HYDRANT

Call 811 two business days before you dig

TCA
ARCHITECTURE + PLANNING + DESIGN
6211 ROOSEVELT WAY NORTHEAST
SEATTLE, WA 98115
tel: (206) 522-3830
fax: (206) 522-2456

kpff
1601 5th Avenue, Suite 1600
Seattle, WA 98101
206.622.5822
www.kpff.com

JEREMY S. FERRIS
STATE OF WASHINGTON
50847
REGISTERED PROFESSIONAL ENGINEER
8/10/2020

BID SET

No.	Description	Date:
2	ADDENDUM # 2	8/10/20

Project Title:

FIRE STATION 24

City of Kirkland
Kirkland, Washington

Sheet Title:

UTILITY PLAN

Scale: AS NOTED
Project No. 1700011
Date : JULY 21, 2020

Sheet Number :

2

C5.0

Z:\1700001-1700999\1700011 (Kirkland Fire Sta 24)\CADD\Design\C0\C5.0KFS-24 UT.dwg
Aug 10, 2020 - 10:57am teresad

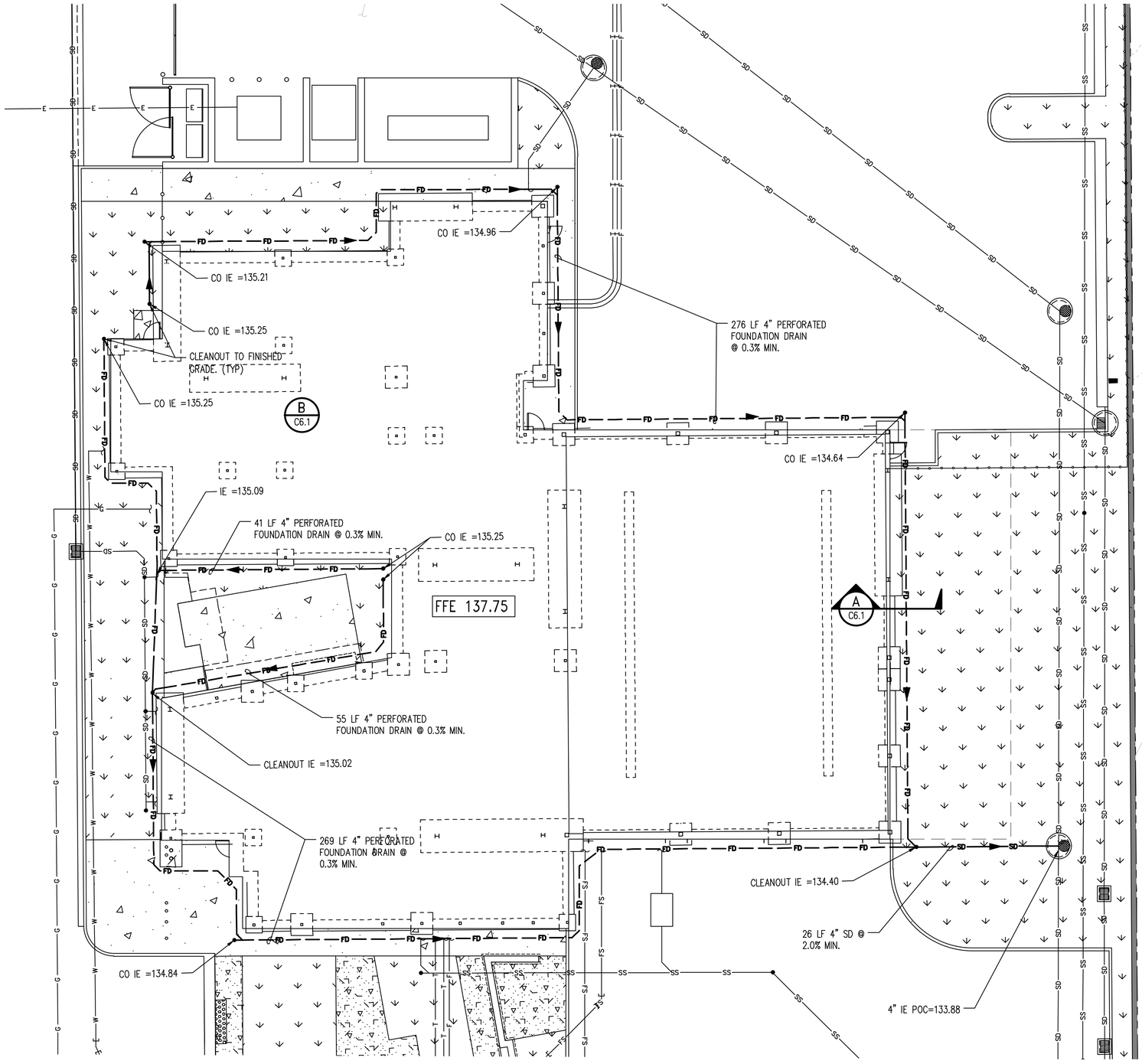

FOUNDATION DRAINAGE NOTES:

1. PRIOR TO CONSTRUCTION, CONTRACTOR SHALL VERIFY LOCATION, SIZE AND ELEVATION OF EXISTING UTILITY POINT CONNECTIONS.
2. FINISHED FLOOR ELEVATIONS SHOWN FOR REFERENCE ONLY. SEE ARCHITECTURAL AND STRUCTURAL PLANS FOR FINISHED FLOOR ELEVATIONS.
3. FOUNDATION AND FOOTING SHOWN FOR REFERENCE ONLY. SEE STRUCTURAL PLANS FOR DESIGN AND DETAILS.
4. CLEANOUTS SHALL BE INSTALLED TO FINISHED GRADE.
5. CONTRACTOR SHALL NOT CONNECT ROOF DRAIN LINES TO FOUNDATION DRAINS.
6. FOUNDATION DRAINS SHALL HAVE DIRECT CONNECTION TO STORM OUTFALL PIPE.

LEGEND

- PROPERTY/ROW LINE
- CONCRETE PAVEMENT
- PERVIOUS CONCRETE PAVEMENT
- LANDSCAPE AREA
- CURB LINE
- SD — STORM DRAIN LINE
- FD — PERFORATED FOUNDATION DRAIN LINE
- CLEANOUT
- FLOW DIRECTION

N

0 5 10 20
1 inch = 10 feet

Call 811 two business days before you dig

TCA
ARCHITECTURE + PLANNING + DESIGN
6211 ROOSEVELT WAY NORTHEAST
SEATTLE, WA 98115
tel: (206) 522-3830
fax: (206) 522-2456

kpff
1601 5th Avenue, Suite 1600
Seattle, WA 98101
206.622.5822
www.kpff.com

JEREMY S. FERRIS
STATE OF WASHINGTON
50847
REGISTERED PROFESSIONAL ENGINEER
8/10/2020

BID SET

No.	Description	Date:
2	ADDENDUM # 2	8/10/20

Project Title:

FIRE STATION 24
City of Kirkland
Kirkland, Washington

Sheet Title:

FOUNDATION DRAINAGE PLAN

Scale: **AS NOTED**
Project No. **1700011**
Date : **JULY 21, 2020**

Sheet Number :
2
C6.0

Z:\1700001-1700999\1700011 (Kirkland Fire Sta 24)\CADD\Design\CD\C6.0KFS-24 FD.dwg
Aug 10, 2020 - 10:57am teressad

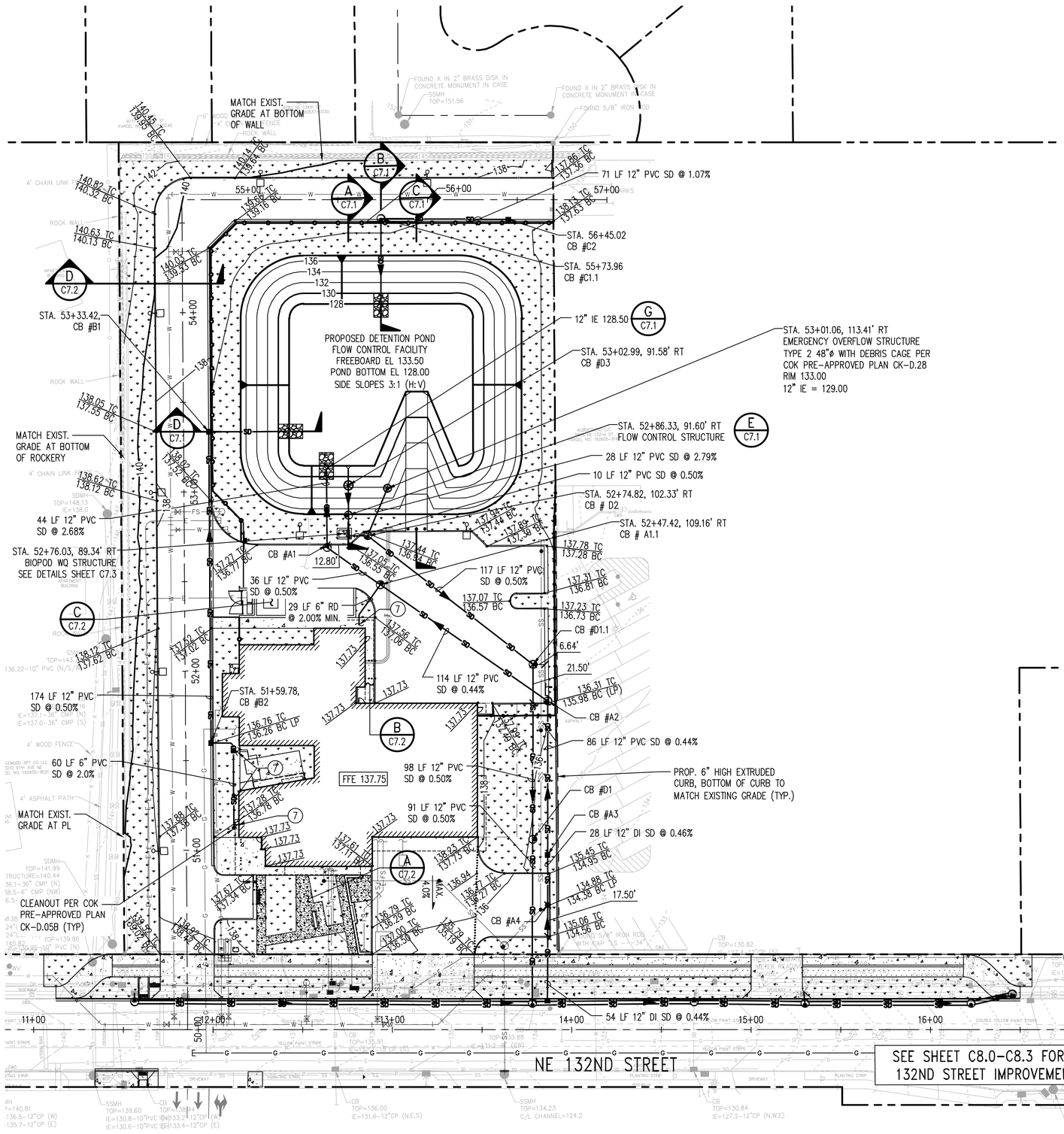

GRADING AND DRAINAGE NOTES:

1. CONTRACTOR SHALL INSTALL CATCH BASINS AT LOW POINTS, AS INDICATED ON THIS PLAN SHEET. FOR CATCH BASINS ADJACENT TO CURBS, CONTRACTOR SHALL ALIGN EDGE OF VANED GRATE TO BE FLUSH WITH ADJACENT BOTTOM OF CURB.
2. ALL DIMENSIONS ARE TO THE FACE OF CURB, EDGE OF PAVEMENT, CENTERLINE ALIGNMENT, PROPERTY LINE OR FACE OF BUILDING, UNLESS OTHERWISE NOTED. DIMENSIONS TO DRAINAGE STRUCTURES ARE TO THE CENTER OF STRUCTURE.
3. SIDEWALK CROSS SLOPES SHALL NOT EXCEED 2.0%.
4. CATCH BASIN AND MANHOLES SHALL BE PER COK STANDARD PLAN CK-D.07 (TYPE 1) AND CK-D.09 (TYPE 2). CATCH BASIN PRECAST COVER, STEPS, HANDHOLDS, AND LADDERS SHALL BE PER COK STANDARD PLAN CK-D.12
5. CATCH BASIN VANED GRATE AND FRAME SHALL BE PER COK STANDARD PLAN CK-D.12 AND CK-D.16A.
6. STORM DRAIN PIPES SHALL BE SOLID WALL PVC SDR35 OR DUCTILE IRON CL50.
7. SEE MEP PLANS FOR BUILDING ROOF DRAIN POC CONTINUATION
8. DIMENSION AND STATIONING FOR DRAINAGE STRUCTURES ARE TO CENTER OF STRUCTURE, UNLESS OTHERWISE NOTED.

DRAINAGE STRUCTURE TABLE

ID	TYPE	COVER	RIM ELEV	NORTH IE	SOUTH IE	EAST IE	WEST IE
A1	TYPE 2, 48"ø	VANED GRATE	136.41	129.68	–	129.68	–
A1.1	TYPE 2, 48"ø	SOLID ROUND	136.95	–	130.36	129.86	129.86
A2	TYPE 2, 48"ø	VANED GRATE	135.98	–	130.36	–	130.36
A3	TYPE 1	VANED GRATE	135.09	130.74	130.74	–	–
A4	TYPE 1	VANED GRATE	134.38	130.87	130.87	–	–
B1	TYPE 1	VANED GRATE	136.95	–	131.24	131.24	–
B2	TYPE 1	VANED GRATE	136.26	132.11	–	132.61	–
C1.1	TYPE 2, 48"ø	VANED GRATE	137.99	–	131.84	131.84	–
C2	TYPE 1	VANED GRATE	136.75	–	–	–	132.60
D1	TYPE 2, 48"ø	SOLID ROUND	135.87	122.29	122.29	–	133.38
D1.1	TYPE 2, 48"ø	SOLID ROUND	136.59	–	122.78	–	122.78
D2	TYPE 2, 48"ø	SOLID ROUND	136.79	128.22	123.37	–	123.37
D3	TYPE 2, 48"ø	DEBRIS CAGE	132.50	128.45	128.45	–	–

LEGEND

- PROPERTY/ROW LINE
- PROPOSED BUILDING
- TOP OF BIORETENTION
- TYPE 1 CATCH BASIN
- TYPE 2 CATCH BASIN
- CLEANOUT PER COK STD PLAN CK-D.05B
- SD — STORM DRAIN LINE
- SS — SANITARY SEWER LINE
- W — WATER SERVICE LINE
- FS — FIRE SERVICE LINE
- G — GAS SERVICE LINE

Call 811 two business days before you dig

TCA
ARCHITECTURE + PLANNING + DESIGN
6211 ROOSEVELT WAY NORTHEAST
SEATTLE, WA 98115
tel: (206) 522-3830
fax: (206) 522-2456

kpff
1601 5th Avenue, Suite 1600
Seattle, WA 98101
206.622.5822
www.kpff.com

JEREMY S. FERRIS STATE OF WASHINGTON 39847 REGISTERED PROFESSIONAL ENGINEER
8/10/2020

BID SET

No.	Description	Date:
2	ADDENDUM # 2	8/10/20

Project Title:

FIRE STATION 24
City of Kirkland
Kirkland, Washington

Sheet Title:

GRADING AND DRAINAGE PLAN

Scale: **AS NOTED**
Project No. : **1700011**
Date : **JULY 21, 2020**

Sheet Number :

2 **C7.0**

Z:\1700001-1700999\1700011 (Kirkland Fire Sta 24)\CADD\Design\C0\C7.0KFS-24 GD.dwg
Aug 10, 2020 - 10:57am teresad

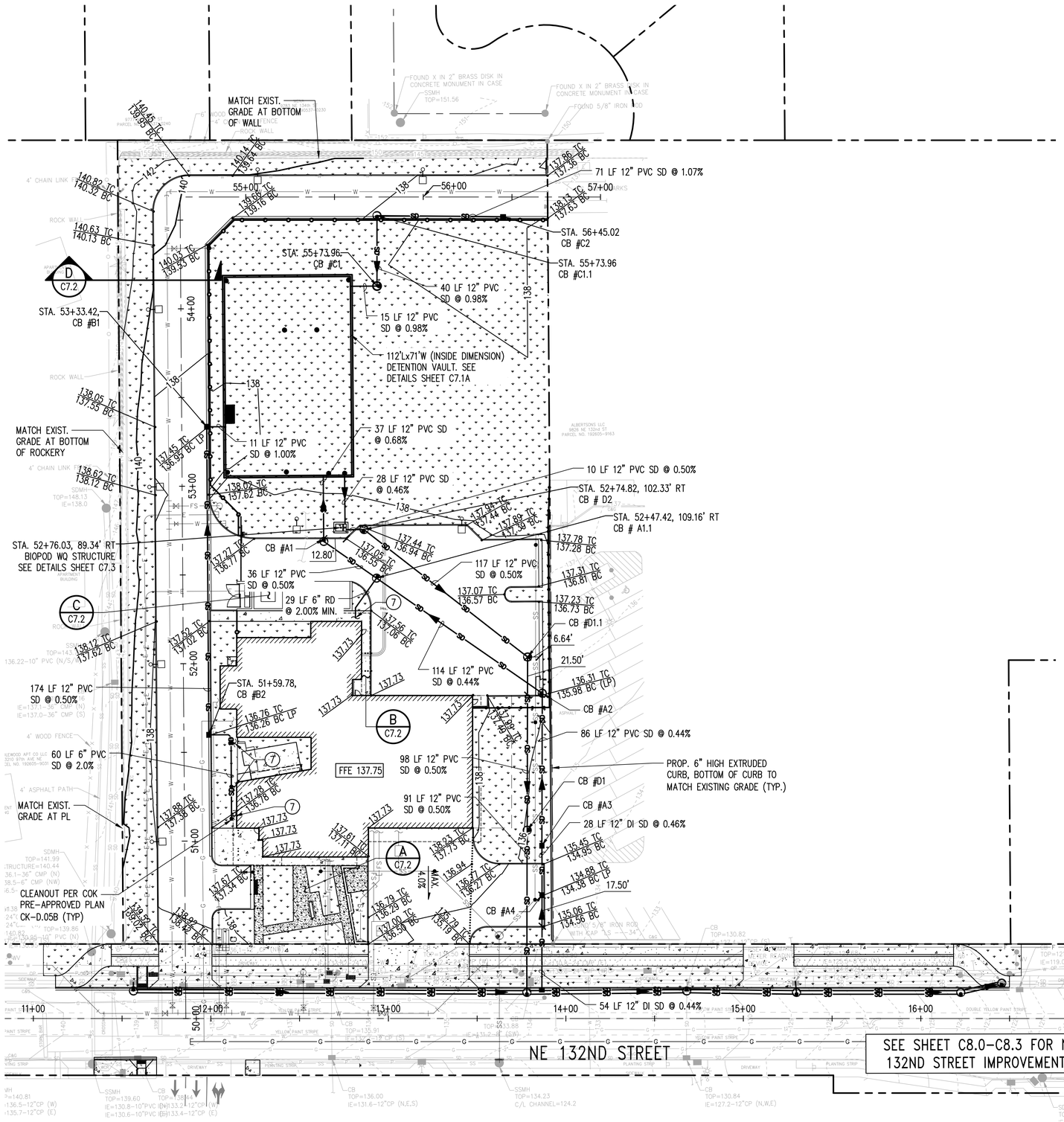

GRADING AND DRAINAGE NOTES:

1. CONTRACTOR SHALL INSTALL CATCH BASINS AT LOW POINTS, AS INDICATED ON THIS PLAN SHEET. FOR CATCH BASINS ADJACENT TO CURBS, CONTRACTOR SHALL ALIGN EDGE OF VANED GRATE TO BE FLUSH WITH ADJACENT BOTTOM OF CURB.
2. ALL DIMENSIONS ARE TO THE FACE OF CURB, EDGE OF PAVEMENT, CENTERLINE ALIGNMENT, PROPERTY LINE OR FACE OF BUILDING, UNLESS OTHERWISE NOTED. DIMENSIONS TO DRAINAGE STRUCTURES ARE TO THE CENTER OF STRUCTURE.
3. SIDEWALK CROSS SLOPES SHALL NOT EXCEED 2.0%.
4. CATCH BASIN AND MANHOLES SHALL BE PER COK STANDARD PLAN CK-D.07 (TYPE 1) AND CK-D.09 (TYPE 2). CATCH BASIN PRECAST COVER, STEPS, HANDHOLDS, AND LADDERS SHALL BE PER COK STANDARD PLAN CK-D.12
5. CATCH BASIN VANED GRATE AND FRAME SHALL BE PER COK STANDARD PLAN CK-D.12 AND CK-D.16A.
6. STORM DRAIN PIPES SHALL BE SOLID WALL PVC SDR35 OR DUCTILE IRON CL50 PER PLAN.
7. SEE MEP PLANS FOR BUILDING ROOF DRAIN POC CONTINUATION
8. DIMENSION AND STATIONING FOR DRAINAGE STRUCTURES ARE TO CENTER OF STRUCTURE, UNLESS OTHERWISE NOTED.

DRAINAGE STRUCTURE TABLE

ID	TYPE	COVER	RIM ELEV	NORTH IE	SOUTH IE	EAST IE	WEST IE
A1	TYPE 2, 48"ø	VANED GRATE	136.41	129.68	–	129.68	–
A1.1	TYPE 2, 48"ø	SOLID ROUND	136.95	–	130.36	129.86	129.86
A2	TYPE 2, 48"ø	VANED GRATE	135.98	–	130.36	–	130.36
A3	TYPE 1	VANED GRATE	135.09	130.74	130.74	–	–
A4	TYPE 1	VANED GRATE	134.38	130.87	130.87	–	–
B1	TYPE 1	VANED GRATE	136.95	–	131.24	131.24	–
B2	TYPE 1	VANED GRATE	136.26	132.11	–	132.61	–
C1	TYPE 2, 48"ø	SOLID ROUND	138.17	130.96	–	–	130.96
C1.1	TYPE 2, 48"ø	VANED GRATE	137.99	–	131.84	131.84	–
C2	TYPE 1	VANED GRATE	136.75	–	–	–	132.60
D1	TYPE 2, 48"ø	SOLID ROUND	135.87	122.29	122.29	–	133.38
D1.1	TYPE 2, 48"ø	SOLID ROUND	136.59	–	122.78	–	122.78
D2	TYPE 2, 48"ø	SOLID ROUND	136.79	–	123.37	–	123.37

LEGEND

- PROPERTY/ROW LINE
- PROPOSED BUILDING
- TYPE 1 CATCH BASIN
- TYPE 2 CATCH BASIN
- CLEANOUT PER COK STD PLAN CK-D.05B
- STORM DRAIN LINE
- SANITARY SEWER LINE
- WATER SERVICE LINE
- FIRE SERVICE LINE
- GAS SERVICE LINE
- GRADE BREAK LINE

Call 811 two business days before you dig

TCA
ARCHITECTURE + PLANNING + DESIGN
6211 ROOSEVELT WAY NORTHEAST
SEATTLE, WA 98115
tel: (206) 522-3830
fax: (206) 522-2456

kpff
1601 5th Avenue, Suite 1600
Seattle, WA 98101
206.622.5822
www.kpff.com

8/10/2020
BID SET

No.	Description	Date:
2	ADDENDUM # 2	8/10/20

Project Title:

FIRE STATION 24
City of Kirkland
Kirkland, Washington

Sheet Title:
GRADING AND DRAINAGE PLAN - BID ALTERNATE DETENTION VAULT

Scale: AS NOTED
Project No. : 1700011
Date : JULY 21, 2020

Sheet Number :
2
C7.0A

Z:\1700001-1700999\1700011 (Kirkland Fire Sta 24)\CADD\Design\C0\C7.0KFS-24 GD.dwg
Aug 10, 2020 - 10:57am teresad

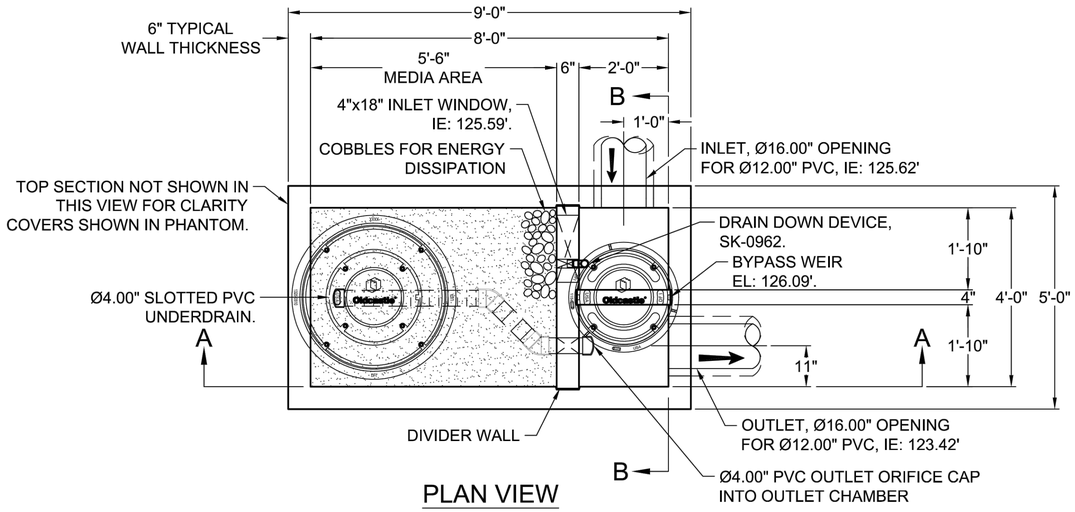

PLAN VIEW

SITE SPECIFIC DATA				
Structure ID				
Model Size				BPU-48IB
Orientation (Left or Right)				LEFT
Treatment Flow Rate (cfs)				0.033
Peak Flow Rate (cfs)				0.862
Rim Elevation				137.10
Pipe Data	Pipe Location (Front or Side)	Pipe Size	Pipe Type	Invert Elevation
Inlet	FRONT	12"	PER PLAN	125.62
Outlet	SIDE	12"	PER PLAN	123.42
Notes:				
TREATMENT FLOW RATE BASED ON 2-YR RELEASE RATE DOWNSTREAM OF DETENTION FACILITY				

NOTES:

1. PRIOR TO CONSTRUCTION, CONTRACTOR SHALL PROVIDE SUBMITTAL OF BIOPOD BIOFILTER VAULT STRUCTURE FROM OLDCASTLE INFRASTRUCTURE TO ENGINEER FOR REVIEW AND APPROVAL. INFORMATION SHOWN ON THIS PLAN IS INTENDED TO DOCUMENT WATER QUALITY DESIGN FLOW RATE, INLET AND OUTLET PIPE SIZE, TYPE AND INVERT ELEVATIONS AND RIM ELEVATIONS.
2. BIOPOD BIOFILTER SHALL BE DESIGNED FOR OUTRIGGER LOADS.
3. CONTRACTOR SHALL INSTALL BIOPOD BIOFILTER PER MANUFACTURER REQUIREMENTS AND SPECIFICATIONS.

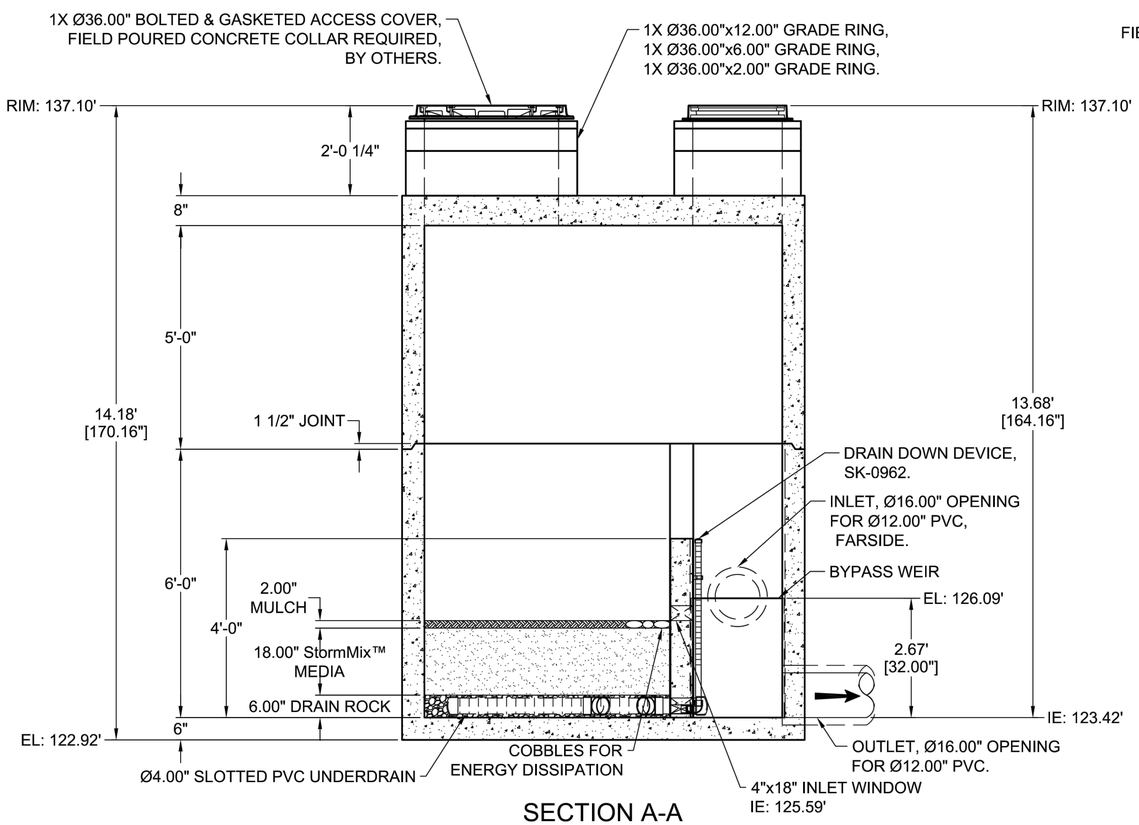

SECTION A-A

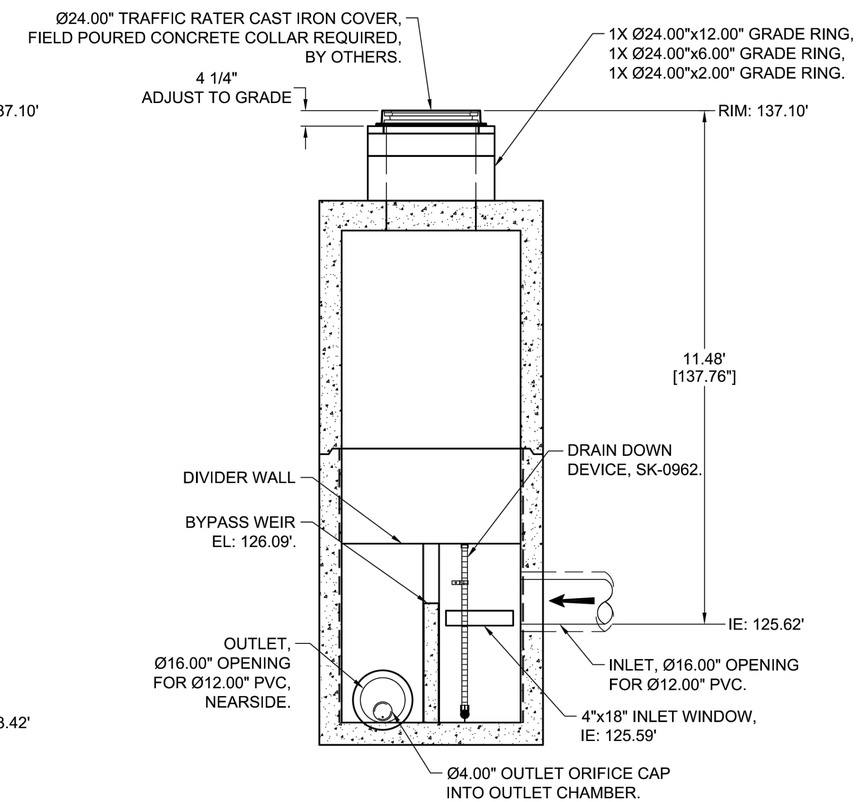

SECTION B-B

WATER QUALITY TREATMENT BIOPOD BIOFILTER DETAIL

NTS

B
C7.0

PROPRIETARY DRAINAGE INFRASTRUCTURE NOTE: THIS SHEET IS PROVIDED FOR CONFIRMATION OF CONSISTENCY WITH DESIGN ONLY. MANUFACTURER IS SOLELY RESPONSIBLE FOR THEIR PRODUCT AND SPECIFICATIONS

Call 811 two business days before you dig

TCA
ARCHITECTURE + PLANNING + DESIGN
6211 ROOSEVELT WAY NORTHEAST
SEATTLE, WA 98115
tel: (206) 522-3830
fax: (206) 522-2456

kpff
1601 5th Avenue, Suite 1600
Seattle, WA 98101
206.622.5822
www.kpff.com

8/10/2020

BID SET

No.	Description	Date:
2	ADDENDUM # 2	8/10/20

Project Title:

FIRE STATION 24

City of Kirkland
Kirkland, Washington

Sheet Title:

WATER QUALITY TREATMENT DETAIL - BIOPOD BIOFILTER

Scale: AS NOTED

Project No. : 1700011

Date : JULY 21, 2020

Sheet Number :

2

C7.3

Z:\1700001-1700999\1700011 (Kirkland Fire Sta 24)\CADD\Design\CD\C7.2KFS-24 GD DET.dwg
Aug 10, 2020 - 10:57am teresad

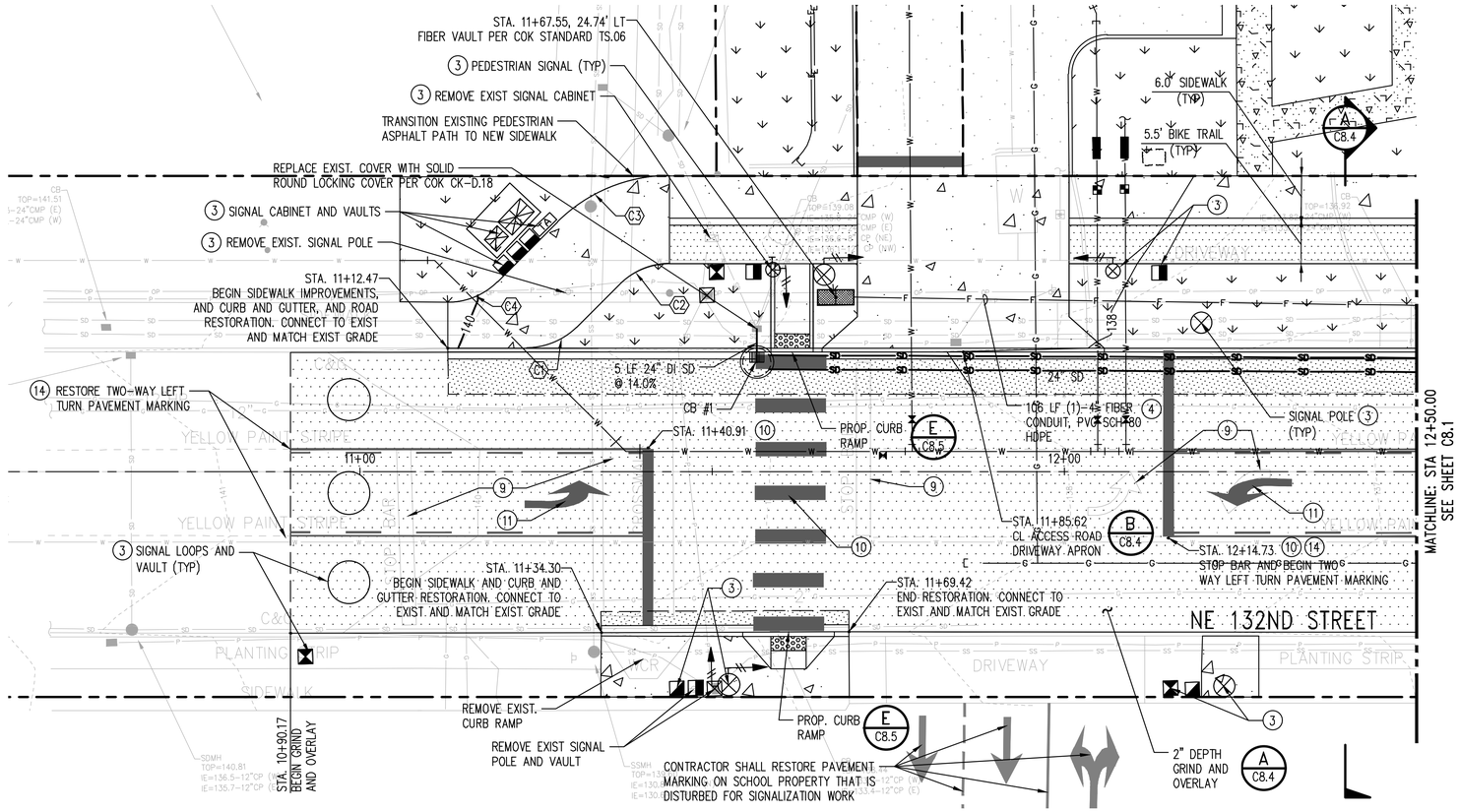

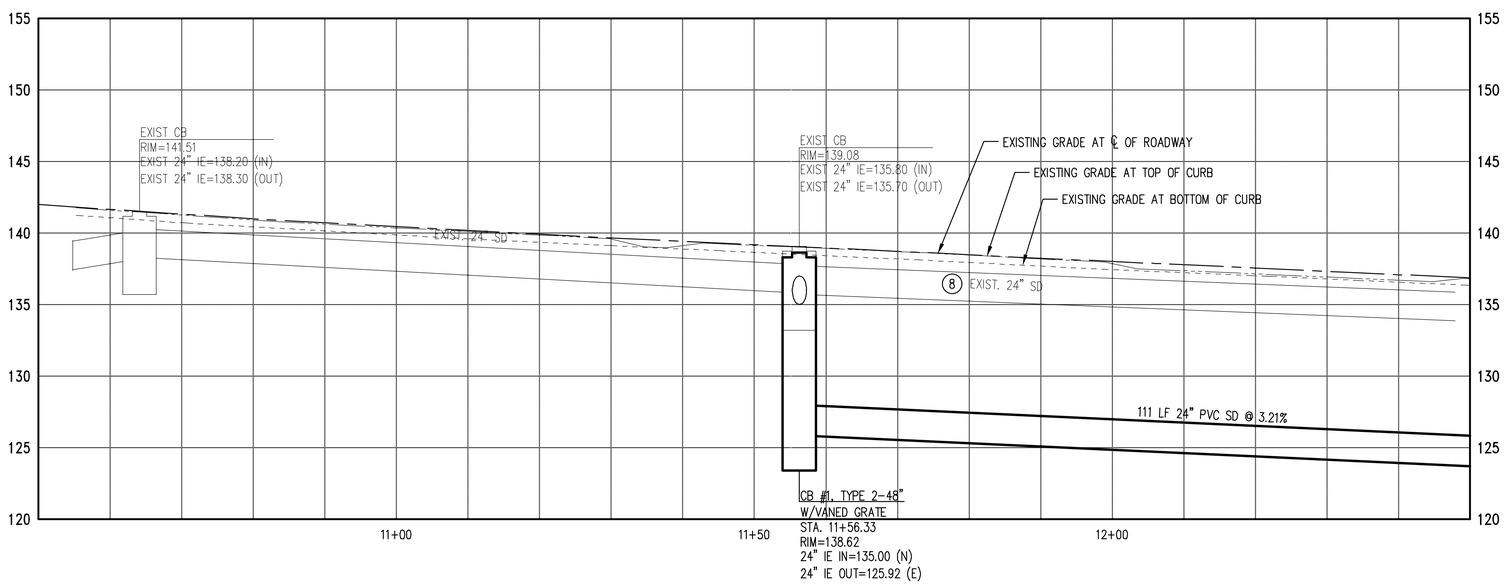

CONSTRUCTION NOTES:

1. CONTRACTOR SHALL LOCATE ALL EXISTING UTILITIES PRIOR TO CONSTRUCTION.
2. EXISTING BELOW AND ABOVE GRADE UTILITIES SHALL REMAIN UNLESS OTHERWISE NOTED. ANY UTILITIES DAMAGED THAT ARE INTENDED TO REMAIN SHALL BE RESTORED AT THE CONTRACTOR'S EXPENSE.
3. SEE SIGNAL PLANS FOR SIGNAL INFRASTRUCTURE DETAILS, CONDUITS, AND SIGNAGE. COORDINATE FINAL LOCATIONS IN THE FIELD WITH CITY OF KIRKLAND AND TRAFFIC ENGINEER.
4. CONTRACTOR SHALL INSTALL VAULTS AND CONDUITS FOR FIBER AND TELECOMMUNICATION UTILITIES. UTILITY PURVEYOR SHALL PERFORM INSTALLATION OF SERVICE FEEDS AT OWNER'S EXPENSE. CONTRACTOR SHALL COORDINATE WITH UTILITY PURVEYOR FOR PULLING SERVICE FEEDS AFTER CONDUIT INSTALLATION.
5. UTILITY VAULT COVERS LOCATED WITHIN PAVEMENT AREAS SHALL BE TRAFFIC RATED.
6. EXISTING UTILITY STRUCTURE LIDS AND COVERS SHALL BE ADJUSTED TO MATCH FINISHED GRADES.
7. CONTRACTOR SHALL RESTORE EXISTING RIGHT OF WAY IMPROVEMENTS DAMAGED DURING CONSTRUCTION OF PROPOSED UTILITIES IN THE RIGHT OF WAY BEYOND LIMITS OF PROJECT FRONTAGE.
8. REMOVE EXISTING CATCH BASIN. PLUG AND ABANDON EXISTING STORM MAIN AND FILL WITH CEMENT PER COK STANDARDS. CONTRACTOR SHALL COORDINATE REMOVAL OF EXISTING STORM MAIN FOR INSTALLATION OF PROPOSED SIGNAL AND UTILITY INFRASTRUCTURE.
9. REMOVE EXISTING STOP BAR AND TURN ARROW PAVEMENT MARKINGS.
10. STOP BAR AND CROSS WALK PER COK STANDARD PLAN CK-R.28.
11. LEFT TURN ARROW PER COK STANDARD PLAN CK-R.30. COORDINATE FINAL LOCATIONS IN THE FIELD WITH CITY OF KIRKLAND AND TRAFFIC ENGINEER.
12. STORM DRAIN PIPES IN PUBLIC RIGHT OF WAY SHALL BE DUCTILE IRON CL50 OR SOLID WALL PVC SDR35. KOR-N-SEAL BOOT WITH CORRUGATED PIPE ADAPTER OR APPROVED EQUAL SHALL BE REQUIRED FOR NEW PIPE CONNECTIONS TO DRAINAGE STRUCTURES.
13. PIPE ABANDONMENT SHALL BE LOCATED OUTSIDE OF STRUCTURE TO ELIMINATE PIPE PROTRUSION.
14. TWO-WAY LEFT TURN PAVEMENT MARKING AND DOUBLE YELLOW CENTER PAVEMENT MARKING PER COK PRE-APPROVED PLAN CK-R.31

CURVE DATA TABLE - 1

RADIUS	ANGLE	LENGTH
10.3'	43°36'10"	7.83'
PC 11+23.65, 17.54' LT	EL	139.71'
1/2 POINT	EL	139.73'
PT 11+30.72, 20.45' LT	EL	139.75' EG

CURVE DATA TABLE - 2

RADIUS	ANGLE	LENGTH
10.0	44°53'06"	7.83'
PC 11+36.88, 26.58' LT	EL	139.50'
1/2 POINT	EL	139.64'
PT 11+43.94, 29.50' LT	EL	139.78'

CURVE DATA TABLE - 3

RADIUS	ANGLE	LENGTH
22.6'	44°43'29"	17.62'
PC 11+43.93, 42.00' LT	EL	139.72' EG
1/2 POINT	EL	139.97 EG
PT 11+28.06, 35.44' LT	EL	140.00' EG

CURVE DATA TABLE - 4

RADIUS	ANGLE	LENGTH
9.9'	45°25'19"	7.85
PC 11+19.52, 26.93' LT	EL	139.90'
1/2 POINT	EL	139.96'
PT 11+12.47, 24.02' LT	EL	140.13' EG

LEGEND

- PROPERTY/ROW LINE
- TYPE 1 CATCH BASIN
- TYPE 2 CATCH BASIN
- CLEANOUT
- STORM DRAIN LINE
- SANITARY SEWER LINE
- WATER SERVICE LINE
- FIRE SERVICE LINE
- GAS SERVICE LINE
- CONCRETE PAVEMENT
- ASPHALT PAVEMENT
- GRIND AND OVERLAY
- BIKE TRAIL
- LANDSCAPE AREA
- CURB AND CUTTER PER COK STD PLAN CK-R17
- SAWCUT

N

0 5 10 20
1 inch = 10 ft. HORZ

0 2.5 5 10
1 inch = 5 ft. VERT

Call 811 two business days before you dig

TCA
ARCHITECTURE + PLANNING + DESIGN
6211 ROOSEVELT WAY NORTHEAST
SEATTLE, WA 98115
tel: (206) 522-3830
fax: (206) 522-2456

kpff
1601 5th Avenue, Suite 1600
Seattle, WA 98101
206.622.5822
www.kpff.com

JEREMY S. FERRIS, STATE OF WASHINGTON, 35847, REGISTERED PROFESSIONAL ENGINEER
8/10/2020

BID SET

No.	Description	Date:
2	ADDENDUM # 2	8/10/20

Project Title:

FIRE STATION 24
City of Kirkland
Kirkland, Washington

Sheet Title:

NE 132ND STREET PLAN & PROFILE

Scale: **AS NOTED**
Project No. : **1700011**
Date : **JULY 21, 2020**
Sheet Number :

2 **C8.0**

Z:\1700001-1700999\1700011 (Kirkland Fire Sta 24)\CADD\Design\CD\C8.0KFS-24 PF.dwg
Aug 10, 2020 - 10:58am tereson

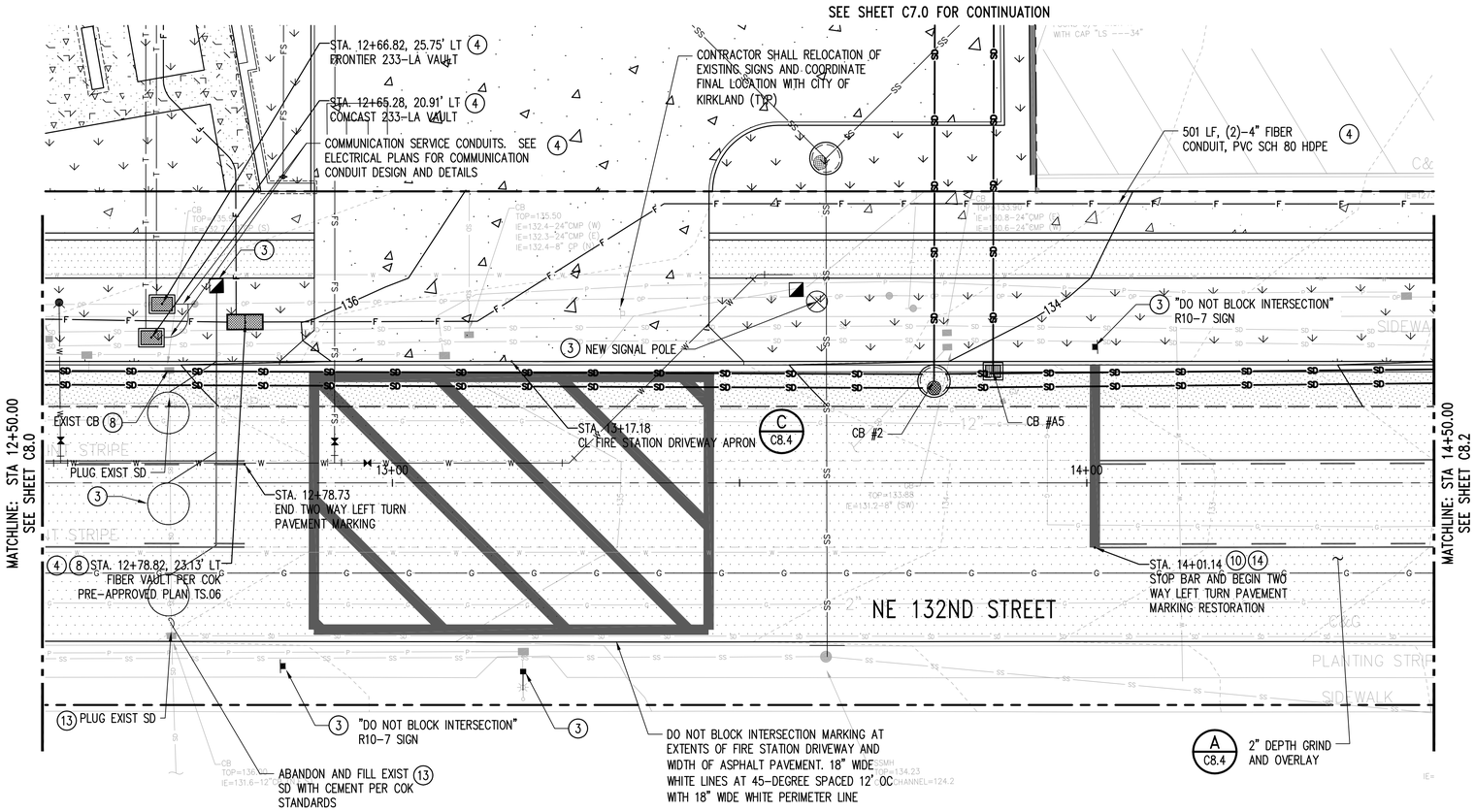

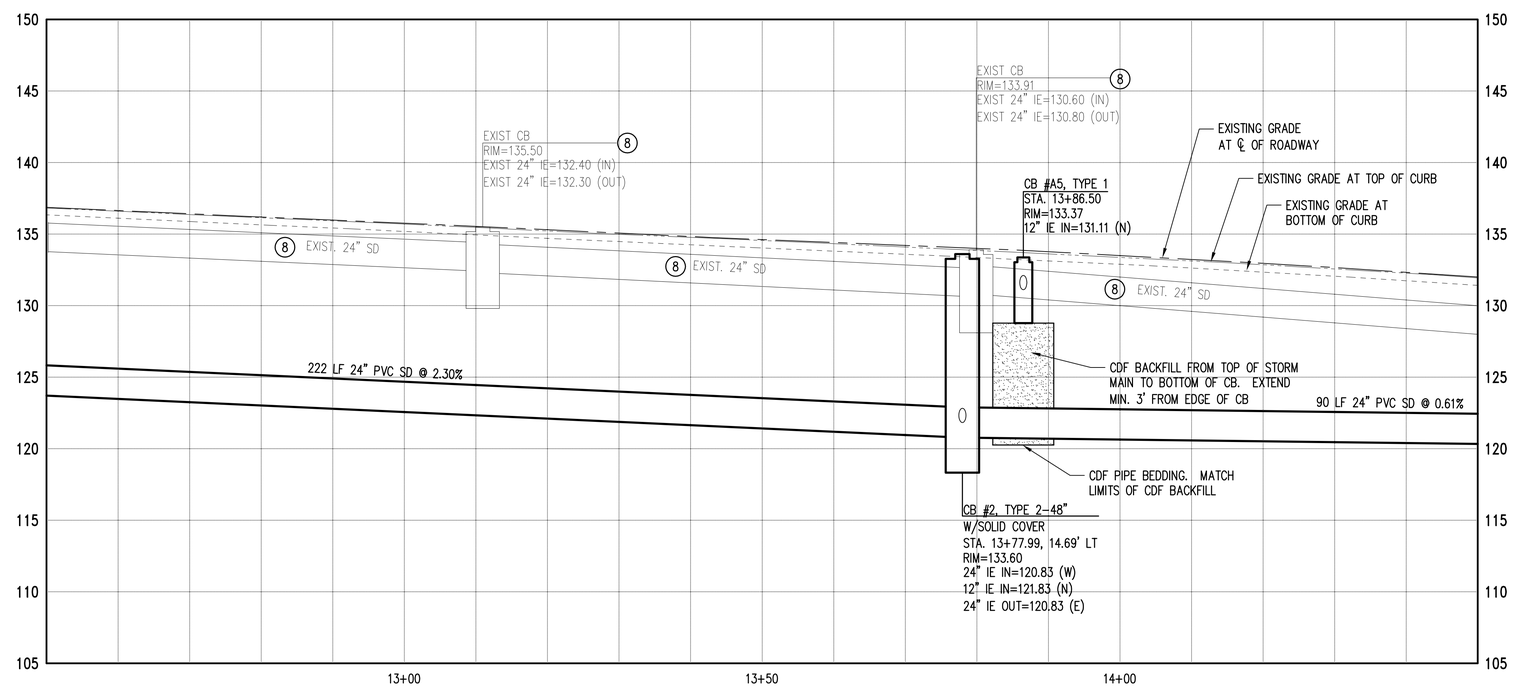

CONSTRUCTION NOTES:

1. CONTRACTOR SHALL LOCATE ALL EXISTING UTILITIES PRIOR TO CONSTRUCTION.
2. EXISTING BELOW AND ABOVE GRADE UTILITIES SHALL REMAIN UNLESS OTHERWISE NOTED. ANY UTILITIES DAMAGED THAT ARE INTENDED TO REMAIN SHALL BE RESTORED AT THE CONTRACTOR'S EXPENSE.

(3) SEE SIGNAL PLANS FOR SIGNAL INFRASTRUCTURE DETAILS, CONDUITS, AND SIGNAGE. COORDINATE FINAL LOCATIONS IN THE FIELD WITH CITY OF KIRKLAND AND TRAFFIC ENGINEER.

(4) CONTRACTOR SHALL INSTALL VAULTS AND CONDUITS FOR FIBER AND TELECOMMUNICATION UTILITIES. UTILITY PURVEYOR SHALL PERFORM INSTALLATION OF SERVICE FEEDS AT OWNER'S EXPENSE. CONTRACTOR SHALL COORDINATE WITH UTILITY PURVEYOR FOR PULLING SERVICE FEEDS AFTER CONDUIT INSTALLATION.

(5) UTILITY VAULT COVERS LOCATED WITHIN PAVEMENT AREAS SHALL BE TRAFFIC RATED.

6. EXISTING UTILITY STRUCTURE LIDS AND COVERS SHALL BE ADJUSTED TO MATCH FINISHED GRADES.

(7) CONTRACTOR SHALL RESTORE EXISTING RIGHT OF WAY IMPROVEMENTS DAMAGED DURING CONSTRUCTION OF PROPOSED UTILITIES IN THE RIGHT OF WAY BEYOND LIMITS OF PROJECT FRONTAGE.

(8) REMOVE EXISTING CATCH BASIN. PLUG AND ABANDON EXISTING STORM MAIN AND FILL WITH CEMENT PER COK STANDARDS. CONTRACTOR SHALL COORDINATE REMOVAL OF EXISTING STORM MAIN FOR INSTALLATION OF PROPOSED SIGNAL AND UTILITY INFRASTRUCTURE.

(9) REMOVE EXISTING STOP BAR AND TURN ARROW PAVEMENT MARKINGS.

(10) STOP BAR AND CROSS WALK PER COK STANDARD PLAN CK-R.28.

(11) LEFT TURN ARROW PER COK STANDARD PLAN CK-R.30. COORDINATE FINAL LOCATIONS IN THE FIELD WITH CITY OF KIRKLAND AND TRAFFIC ENGINEER.

12. STORM DRAIN PIPES IN PUBLIC RIGHT OF WAY SHALL BE DUCTILE IRON CL50 OR SOLID WALL PVC SDR35. KOR-N-SEAL BOOT WITH CORRUGATED PIPE ADAPTER OR APPROVED EQUAL SHALL BE REQUIRED FOR NEW PIPE CONNECTIONS TO DRAINAGE STRUCTURES.

(13) PIPE ABANDONMENT SHALL BE LOCATED OUTSIDE OF STRUCTURE TO ELIMINATE PIPE PROTRUSION.

(14) TWO-WAY LEFT TURN PAVEMENT MARKING AND DOUBLE YELLOW CENTER PAVEMENT MARKING PER COK PRE-APPROVED PLAN CK-R.31

N

0 5 10 20
1 inch = 10 ft. HORZ
0 2.5 5 10
1 inch = 5 ft. VERT

811 Call 811 two business days before you dig

TCA
ARCHITECTURE + PLANNING + DESIGN
6211 ROOSEVELT WAY NORTHEAST
SEATTLE, WA 98115
tel: (206) 522-3830
fax: (206) 522-2456

kpff
1601 5th Avenue, Suite 1600
Seattle, WA 98101
206.622.5822
www.kpff.com

8/10/2020
BID SET

No.	Description	Date:
2	ADDENDUM # 2	8/10/20

Project Title:

FIRE STATION 24
City of Kirkland
Kirkland, Washington

Sheet Title:

NE 132ND STREET PLAN & PROFILE

Scale: **AS NOTED**
Project No. : **1700011**
Date : **JULY 21, 2020**

Sheet Number :
2
C8.1

Z:\1700001-1700999\1700011 (Kirkland Fire Sta 24)\CADD\Design\CD\C8.0KFS-24 PP.dwg
Aug 10, 2020 - 11:45am CharlieC

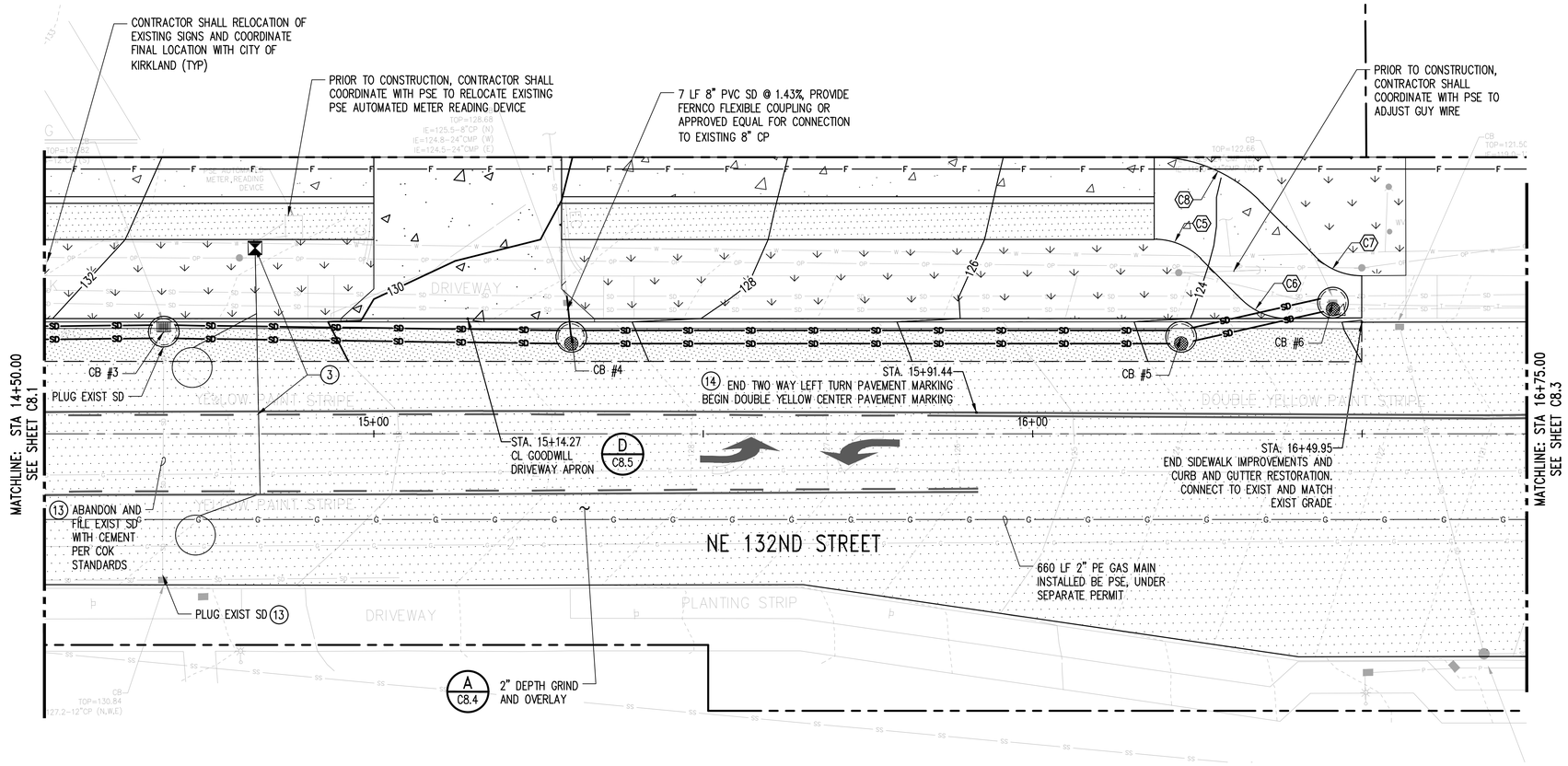

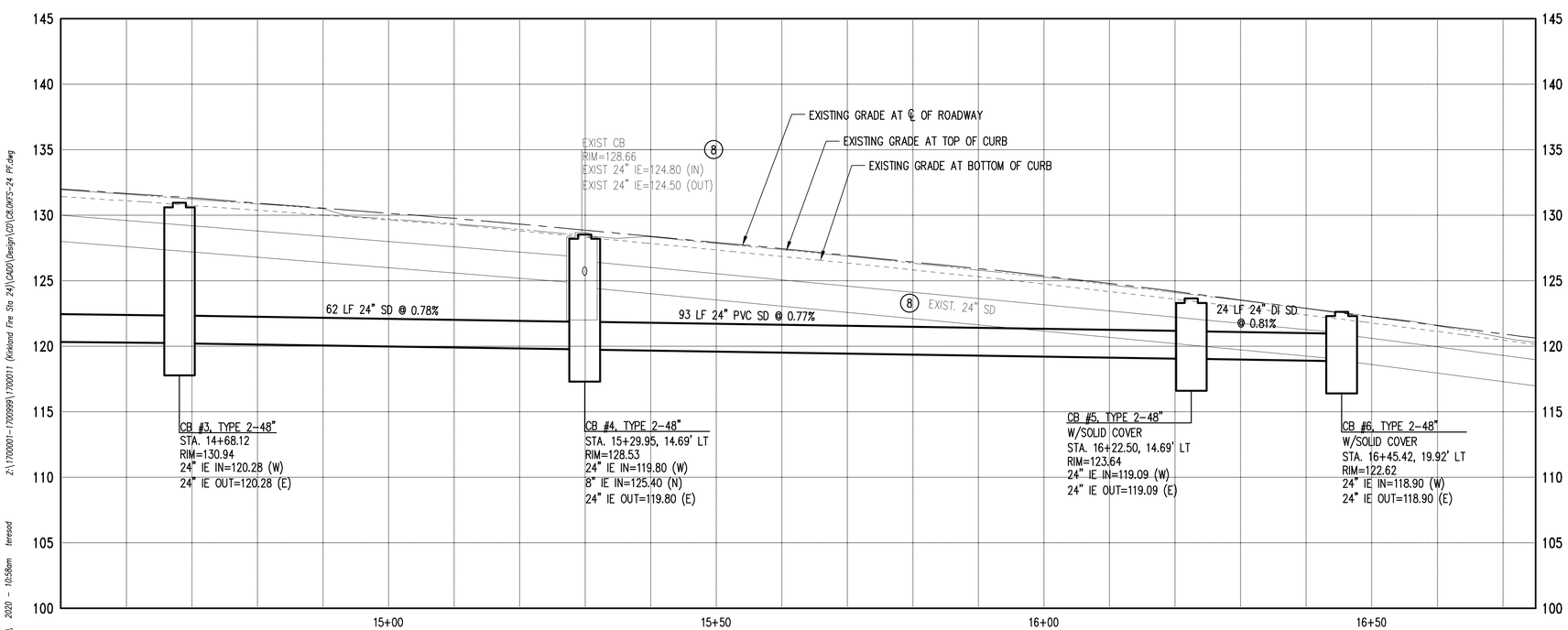

CONSTRUCTION NOTES:

1. CONTRACTOR SHALL LOCATE ALL EXISTING UTILITIES PRIOR TO CONSTRUCTION.
2. EXISTING BELOW AND ABOVE GRADE UTILITIES SHALL REMAIN UNLESS OTHERWISE NOTED. ANY UTILITIES DAMAGED THAT ARE INTENDED TO REMAIN SHALL BE RESTORED AT THE CONTRACTOR'S EXPENSE.

(3) SEE SIGNAL PLANS FOR SIGNAL INFRASTRUCTURE DETAILS, CONDUITS, AND SIGNAGE. COORDINATE FINAL LOCATIONS IN THE FIELD WITH CITY OF KIRKLAND AND TRAFFIC ENGINEER.

(4) CONTRACTOR SHALL INSTALL VAULTS AND CONDUITS FOR FIBER AND TELECOMMUNICATION UTILITIES. UTILITY PURVEYOR SHALL PERFORM INSTALLATION OF SERVICE FEEDS AT OWNER'S EXPENSE. CONTRACTOR SHALL COORDINATE WITH UTILITY PURVEYOR FOR PULLING SERVICE FEEDS AFTER CONDUIT INSTALLATION.

(5) UTILITY VAULT COVERS LOCATED WITHIN PAVEMENT AREAS SHALL BE TRAFFIC RATED.

6. EXISTING UTILITY STRUCTURE LIDS AND COVERS SHALL BE ADJUSTED TO MATCH FINISHED GRADES.

(7) CONTRACTOR SHALL RESTORE EXISTING RIGHT OF WAY IMPROVEMENTS DAMAGED DURING CONSTRUCTION OF PROPOSED UTILITIES IN THE RIGHT OF WAY BEYOND LIMITS OF PROJECT FRONTAGE.

(8) REMOVE EXISTING CATCH BASIN. PLUG AND ABANDON EXISTING STORM MAIN AND FILL WITH CEMENT PER COK STANDARDS. CONTRACTOR SHALL COORDINATE REMOVAL OF EXISTING STORM MAIN FOR INSTALLATION OF PROPOSED SIGNAL AND UTILITY INFRASTRUCTURE.

(9) REMOVE EXISTING STOP BAR AND TURN ARROW PAVEMENT MARKINGS.

(10) STOP BAR AND CROSS WALK PER COK STANDARD PLAN CK-R.28.

(11) LEFT TURN ARROW PER COK STANDARD PLAN CK-R.30. COORDINATE FINAL LOCATIONS IN THE FIELD WITH CITY OF KIRKLAND AND TRAFFIC ENGINEER.

12. STORM DRAIN PIPES IN PUBLIC RIGHT OF WAY SHALL BE DUCTILE IRON CL50 OR SOLID WALL PVC SDR35. KOR-N-SEAL BOOT WITH CORRUGATED PIPE ADAPTER OR APPROVED EQUAL SHALL BE REQUIRED FOR NEW PIPE CONNECTIONS TO DRAINAGE STRUCTURES.

(13) PIPE ABANDONMENT SHALL BE LOCATED OUTSIDE OF STRUCTURE TO ELIMINATE PIPE PROTRUSION.

(14) TWO-WAY LEFT TURN PAVEMENT MARKING AND DOUBLE YELLOW CENTER PAVEMENT MARKING PER COK PRE-APPROVED PLAN CK-R.31

CURVE DATA TABLE – (5)

RADIUS	ANGLE	LENGTH
10.0'	44°53'05"	7.83'
PC 16+18.45, 29.50' LT	EL	124.43'
1/2 POINT	EL	124.27'
PT 16+25.51, 26.58' LT	EL	124.11'

CURVE DATA TABLE – (6)

RADIUS	ANGLE	LENGTH
10.0'	45°00'53"	7.86'
PC 16+31.69, 20.42' LT	EL	123.52'
1/2 POINT	EL	123.31'
PT 16+37.47, 17.50' LT	EL	123.10'

CURVE DATA TABLE – (7)

RADIUS	ANGLE	LENGTH
10.0'	44°59'41"	7.85'
PC 16+49.95, 24.00' LT	EL	122.52' EG
1/2 POINT	EL	122.74'
PT 16+41.74, 27.31' LT	EL	122.95'

CURVE DATA TABLE – (8)

RADIUS	ANGLE	LENGTH
22.5'	44°52'28"	17.63'
PC 16+34.33, 35.44' LT	EL	123.62'
1/2 POINT	EL	124.11'
PT 16+18.45, 42.00' LT	EL	124.60' EG

N

0 5 10 20
1 inch = 10 ft. HORZ
0 2.5 5 10
1 inch = 5 ft. VERT

Call 811 two business days before you dig

TCA
ARCHITECTURE + PLANNING + DESIGN
6211 ROOSEVELT WAY NORTHEAST
SEATTLE, WA 98115
tel: (206) 522-3830
fax: (206) 522-2456

kpff
1601 5th Avenue, Suite 1600
Seattle, WA 98101
206.622.5822
www.kpff.com

8/10/2020
BID SET

No.	Description	Date:
2	ADDENDUM # 2	8/10/20

Project Title:

FIRE STATION 24
City of Kirkland
Kirkland, Washington

Sheet Title:

NE 132ND STREET PLAN & PROFILE

Scale: AS NOTED
Project No. : 1700011
Date : JULY 21, 2020

Sheet Number :
2
C8.2

Z:\1700001-1700999\1700011 (Kirkland Fire Sta 24)\CADD\Design\C2D\C8.0KFS-24 PP.dwg
Aug 10, 2020 - 10:58am teresad

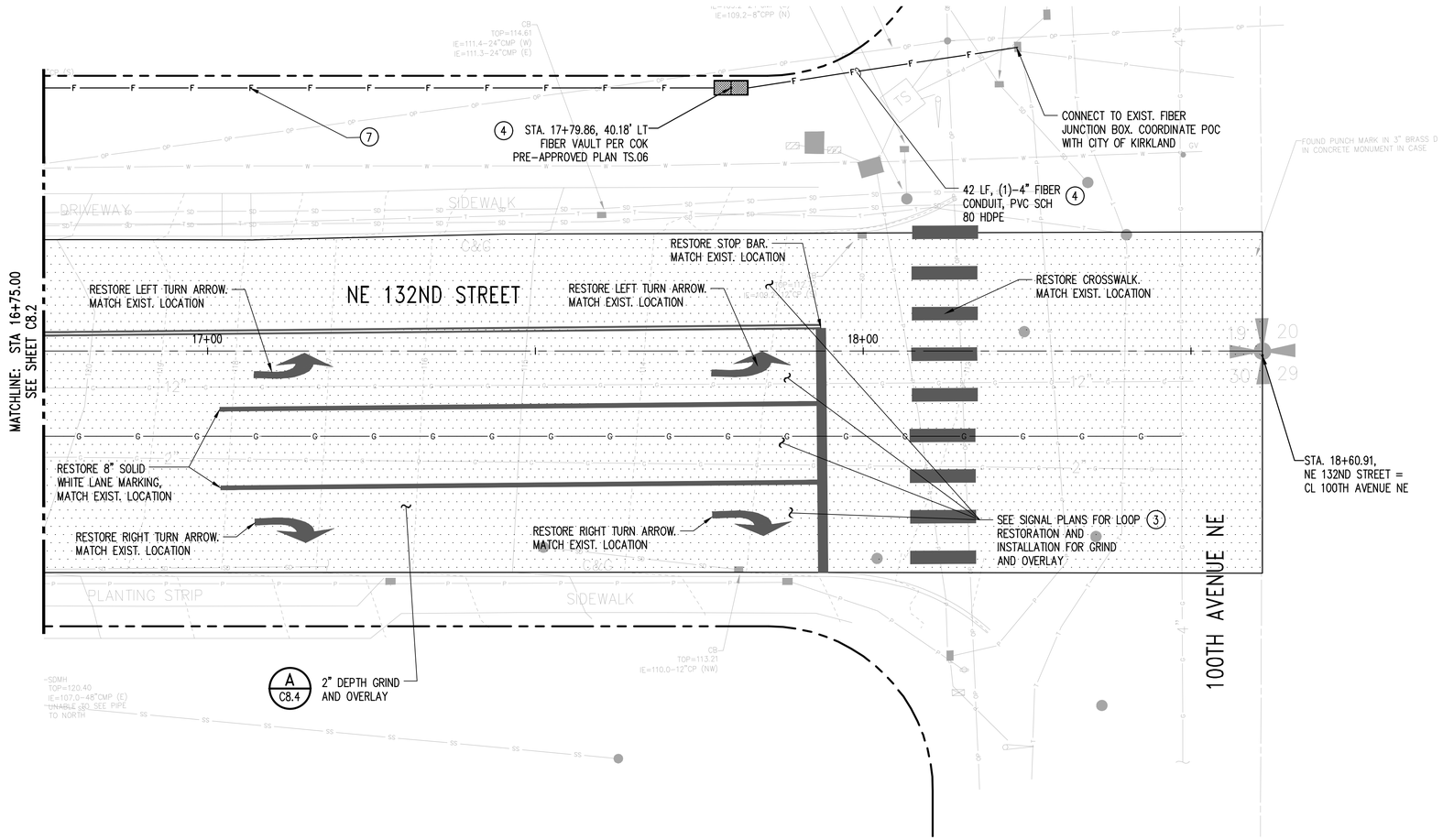

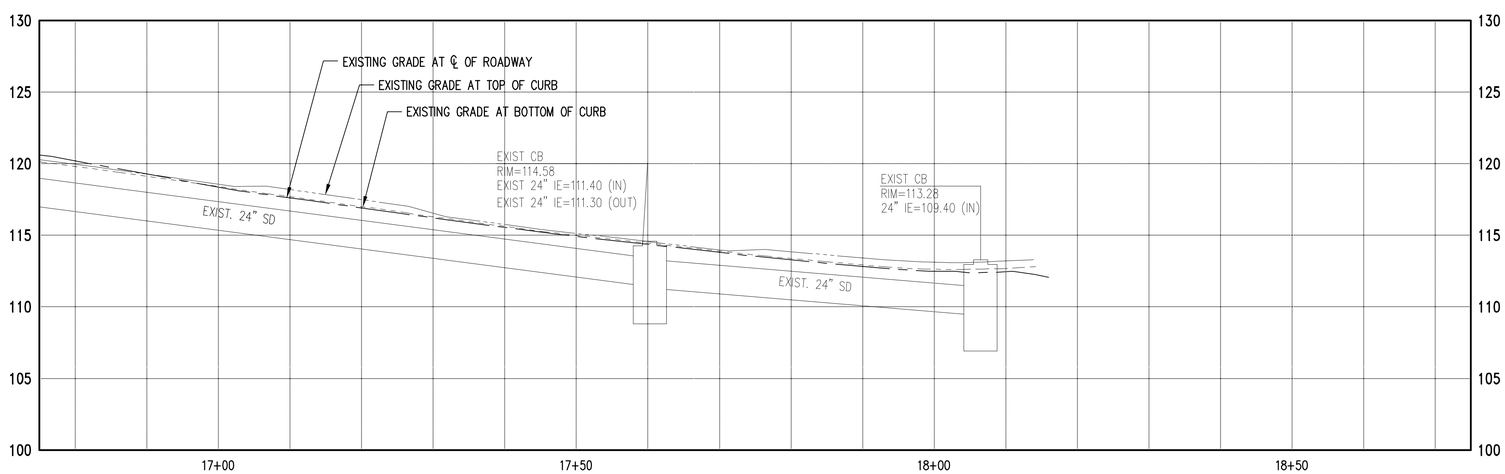

CONSTRUCTION NOTES:

1. CONTRACTOR SHALL LOCATE ALL EXISTING UTILITIES PRIOR TO CONSTRUCTION.
2. EXISTING BELOW AND ABOVE GRADE UTILITIES SHALL REMAIN UNLESS OTHERWISE NOTED. ANY UTILITIES DAMAGED THAT ARE INTENDED TO REMAIN SHALL BE RESTORED AT THE CONTRACTOR'S EXPENSE.

(3) SEE SIGNAL PLANS FOR SIGNAL INFRASTRUCTURE DETAILS, CONDUITS, AND SIGNAGE. COORDINATE FINAL LOCATIONS IN THE FIELD WITH CITY OF KIRKLAND AND TRAFFIC ENGINEER.

(4) CONTRACTOR SHALL INSTALL VAULTS AND CONDUITS FOR FIBER AND TELECOMMUNICATION UTILITIES. UTILITY PURVEYOR SHALL PERFORM INSTALLATION OF SERVICE FEEDS AT OWNER'S EXPENSE. CONTRACTOR SHALL COORDINATE WITH UTILITY PURVEYOR FOR PULLING SERVICE FEEDS AFTER CONDUIT INSTALLATION.

(5) UTILITY VAULT COVERS LOCATED WITHIN PAVEMENT AREAS SHALL BE TRAFFIC RATED.

6. EXISTING UTILITY STRUCTURE LIDS AND COVERS SHALL BE ADJUSTED TO MATCH FINISHED GRADES.

(7) CONTRACTOR SHALL RESTORE EXISTING RIGHT OF WAY IMPROVEMENTS DAMAGED DURING CONSTRUCTION OF PROPOSED UTILITIES IN THE RIGHT OF WAY BEYOND LIMITS OF PROJECT FRONTAGE.

(8) REMOVE EXISTING CATCH BASIN. PLUG AND ABANDON EXISTING STORM MAIN AND FILL WITH CEMENT PER COK STANDARDS. CONTRACTOR SHALL COORDINATE REMOVAL OF EXISTING STORM MAIN FOR INSTALLATION OF PROPOSED SIGNAL AND UTILITY INFRASTRUCTURE.

(9) REMOVE EXISTING STOP BAR AND TURN ARROW PAVEMENT MARKINGS.

(10) STOP BAR AND CROSS WALK PER COK STANDARD PLAN CK-R.28.

(11) LEFT TURN ARROW PER COK STANDARD PLAN CK-R.30. COORDINATE FINAL LOCATIONS IN THE FIELD WITH CITY OF KIRKLAND AND TRAFFIC ENGINEER.

12. STORM DRAIN PIPES IN PUBLIC RIGHT OF WAY SHALL BE DUCTILE IRON CL50 OR SOLID WALL PVC SDR35. KOR-N-SEAL BOOT WITH CORRUGATED PIPE ADAPTER OR APPROVED EQUAL SHALL BE REQUIRED FOR NEW PIPE CONNECTIONS TO DRAINAGE STRUCTURES.

(13) PIPE ABANDONMENT SHALL BE LOCATED OUTSIDE OF STRUCTURE TO ELIMINATE PIPE PROTRUSION.

(14) TWO-WAY LEFT TURN PAVEMENT MARKING AND DOUBLE YELLOW CENTER PAVEMENT MARKING PER COK PRE-APPROVED PLAN CK-R.31

N

0 5 10 20
1 inch = 10 ft. HORZ
0 2.5 5 10
1 inch = 5 ft. VERT

Call 811 two business days before you dig

TCA
ARCHITECTURE + PLANNING + DESIGN
6211 ROOSEVELT WAY NORTHEAST
SEATTLE, WA 98115
tel: (206) 522-3830
fax: (206) 522-2456

kpff
1601 5th Avenue, Suite 1600
Seattle, WA 98101
206.622.5822
www.kpff.com

JEREMY S. FRIEDLIS, STATE OF WASHINGTON, 39847, REGISTERED PROFESSIONAL ENGINEER
8/10/2020

BID SET

No.	Description	Date:
2	ADDENDUM # 2	8/10/20

Project Title:

FIRE STATION 24
City of Kirkland
Kirkland, Washington

Sheet Title:

NE 132ND STREET PLAN & PROFILE

Scale: AS NOTED
Project No. 1700011
Date : JULY 21, 2020

Sheet Number :
2
C8.3

Aug 10, 2020 - 10:58am teresad Z:\1700001-1700999\1700011 (Kirkland Fire Sta 24)\CADD\Design\CD\C8.0KFS-24 PP.dwg

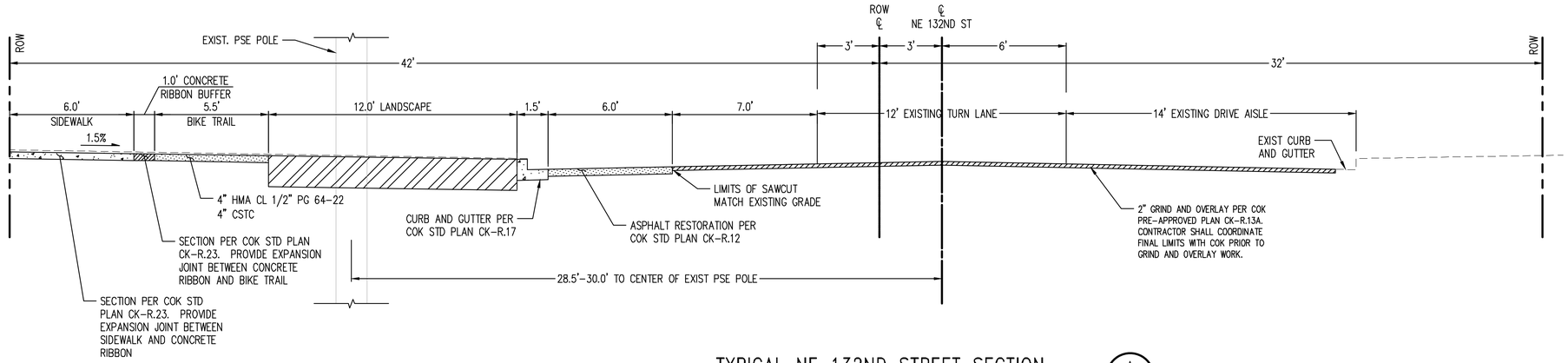

TYPICAL NE 132ND STREET SECTION (A / C8.0–C8.3)

SCALE: 1" = 3'

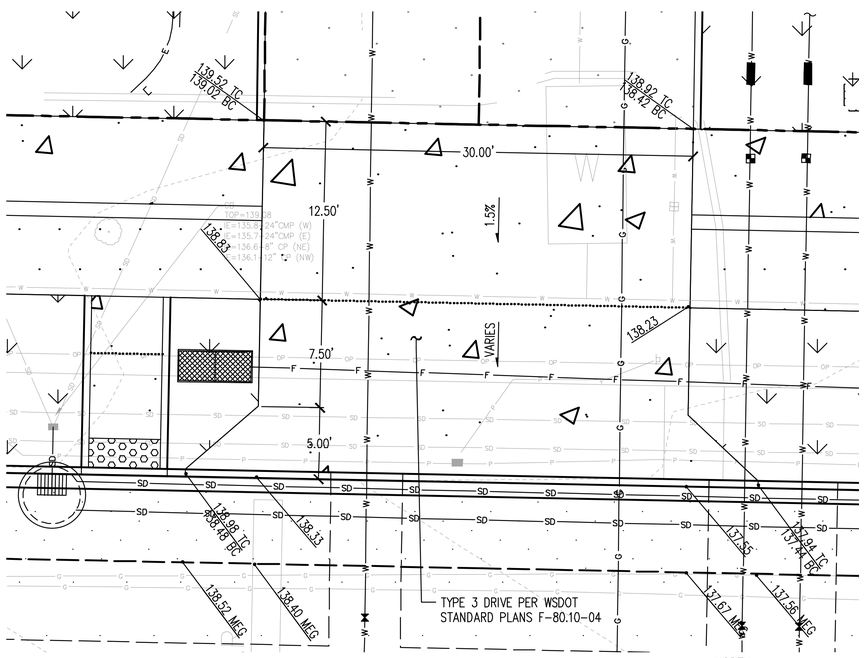

ACCESS ROAD DRIVEWAY APRON (B / C8.0)

1" = 5'

NORTH

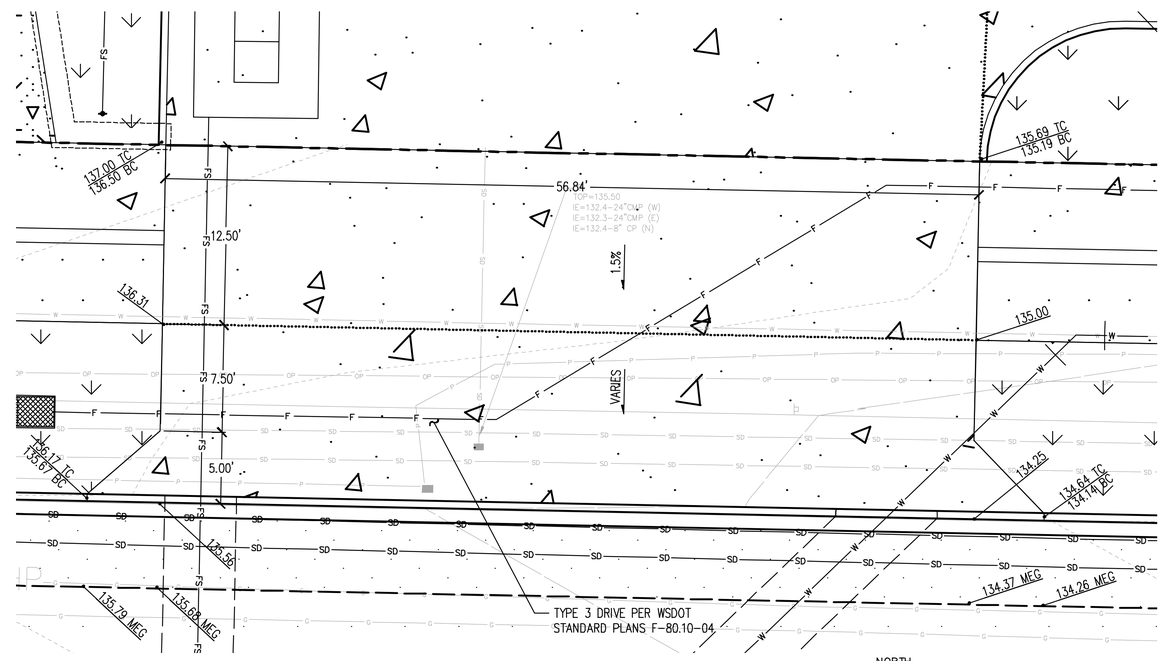

FIRE STATION DRIVEWAY APRON (C / C8.1)

1" = 5'

NORTH

Call 811 two business days before you dig

TCA ARCHITECTURE + PLANNING + DESIGN
6211 ROOSEVELT WAY NORTHEAST
SEATTLE, WA 98115
tel: (206) 522-3830
fax: (206) 522-2456

kpff
1601 5th Avenue, Suite 1600
Seattle, WA 98101
206.622.5822
www.kpff.com

JEREMY S. FERRIS, STATE OF WASHINGTON, 39847, REGISTERED PROFESSIONAL ENGINEER

8/10/2020

BID SET

No.	Description	Date:
2	ADDENDUM # 2	8/10/20

Project Title:

FIRE STATION 24

City of Kirkland
Kirkland, Washington

Sheet Title:

NE 132ND STREET SECTION AND DETAILS

Scale: **AS NOTED**

Project No. **1700011**

Date : **JULY 21, 2020**

Sheet Number :

2 **C8.4**

Z:\1700001-1700999\1700011 (Kirkland Fire Sta 24)\CADD\Design\C20\C8.4KS-24 XSECT.dwg

Aug 10, 2020 – 10:58am teresad

SECTION 19, TOWNSHIP 26N, RANGE 5E

FIRE STATION 24

NORTHSHORE UTILITY DISTRICT

WATER PLAN

9824 NE 132ND STREET

KIRKLAND, WA 98034

SURVEY INFORMATION
SURVEY BY: DAVID EVANS AND ASSOCIATES, INC.
DATED: AUGUST 30, 2019

BASIS OF BEARING
THE SOUTHEAST LINE OF SECTION 19 AS BEING NORTH 88° 50'43" WEST PER ZEE LANE SHORT PLAT A.F.# 20150723900005.

VERTICAL DATUM
ELEVATIONS SHOWN HEREON ARE GEOID-DERIVED NAVD88, GEOID 12B SEPARATIONS WERE APPLIED TO SOLVED ELLIPSOID HEIGHTS.

SITE BENCHMARK: CITY OF KIRKLAND CONTROL POINT NO. 133, LOCATED IN THE NORTHWEST QUADRANT OF THE INTERSECTION OF NE 100TH AVE AND NE 132ND ST, ELEVATION: 115.25 U.S. SURVEY FEET

HORIZONTAL CONTROL SHALL BE NAD '83/'91
VERTICAL CONTROL SHALL BE NAVD '88

PROJECT TEAM

OWNER
CITY OF KIRKLAND
123 5TH AVENUE
KIRKLAND, WA 98033
ANNEKE DAVIS, PE
(425) 587-3828
adavis@kirklandwa.gov

CIVIL ENGINEER
KPFF CONSULTING ENGINEERS
1601 FIFTH AVENUE, SUITE 1600
SEATTLE, WA 98101
(206) 622-5822
TOM JONES
tom.jones@kpff.com

ARCHITECT
TCA ARCHITECTURE PLANNING
6211 ROOSEVELT WAY NE
SEATTLE, WA 98115
(206) 522-3830
FOREST HOOKER
forest@tca-inc.com

SURVEYOR
DAVID EVANS AND ASSOCIATES INC.
1620 W MARINE VIEW DRIVE
EVERETT, WA 98201
(425) 405-1513
GIL LAAS, PLS
gjla@deainc.com

GEOTECHNICAL
HWA GEOSCIENCES INC
21312 30TH DRIVE SE, SUITE 110
BOTHLL, WA 98021
(425) 774-0106
BRYAN HAWKINS, PE
bhawkins@hwageo.com

LANDSCAPE
AHBL INC
1206 6TH AVENUE, SUITE 1620
SEATTLE, WA 98101
(206) 267-2425
MEREDITH SESSIONS
msessions@ahbl.com

SERVICE PROVIDERS:

WATER
NORTHSHORE UTILITY DISTRICT
6830 NE 185TH STREET
KENMORE, WA 98028
(425) 398-4400

SEWER
NORTHSHORE UTILITY DISTRICT
6830 NE 185TH STREET
KENMORE, WA 98028
(425) 398-4400

STORM
CITY OF KIRKLAND
123 5TH AVENUE
KIRKLAND, WA 98033
(425) 587-3800

POWER
PUGET SOUND ENERGY
10885 NE 47TH STREET, SUITE 1200
PO BOX 97034
BELLEVUE, WA 98009
(425) 454-6363
(888) 225-5773

GAS
PUGET SOUND ENERGY
10885 NE 47TH STREET, SUITE 1200
PO BOX 97034
BELLEVUE, WA 98009
(425) 454-6363
(888) 225-5773

SURVEY LEGEND

FOUND IRON ROD AS NOTED	●	GUY ANCHOR	←
FOUND MONUMENT AS NOTED		UTILITY POLE	
WATER TONE LINE		WATER VALVE	WV
SANITARY SEWER LINE		WATER METER	WM
OVERHEAD UTILITY LINE		GAS METER	GM
POWER TONE LINE		FIRE HYDRANT	
GAS TONE LINE		CURB & GUTTER	C&G
TELEPHONE TONE LINE		EXTRUDED CURB	EC
TRAFFIC SIGNAL BOX	TS	EXTRUDED CURB	
ELECTRICAL BOX	E	ELECTRICAL TRANSFORMER	
WATER VAULT	W	BOLLARD	●
ELECTRIC GROUND ROD	●	MAILBOX	
STORM DRAIN MANHOLE	D	FIRE DEPARTMENT CONNECTION	
SEWER MANHOLE	S	AREA DRAIN	
CATCH BASIN		AREA LIGHT	
SIGN		CONIFEROUS TREE	
STREET LIGHT			

CONTRACTOR IS ALERTED TO THE FACT THAT WORK WILL BE ACCOMPLISHED AROUND ACTIVE PSE GAS AND ENERGIZED ELECTRICAL FACILITIES THAT ARE SERVING EXISTING CUSTOMERS. CONTRACTOR SHALL COORDINATE WITH PSE TO DETERMINE WHICH FACILITIES ARE ACTIVE AND ENERGIZED AND SHALL IMPLEMENT SAFETY PROCEDURES PER PSE REQUIREMENTS. CONTRACTOR SHALL COORDINATE WITH PSE TO ENSURE THAT FACILITIES ARE IN PLACE TO MAINTAIN SERVICE TO CUSTOMERS THROUGHOUT CONSTRUCTION.

SHEET INDEX	
SHEET NO	SHEET TITLE
W1.0	COVER SHEET AND NOTES
W2.0	WATER PLAN

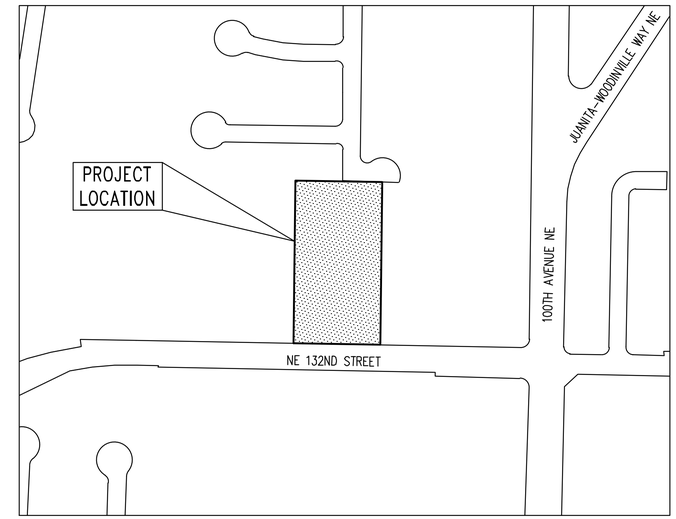

VICINITY MAP
SCALE: 1" = 200'±
NORTH

GENERAL CONSTRUCTION NOTES

1. ALL WORK SHALL CONFORM TO THE CURRENT EDITION OF NORTHSHORE UTILITY DISTRICT STANDARD PLANS AND SPECIFICATIONS, CURRENT EDITION OF CITY OF KIRKLAND PRE-APPROVED PLANS AND THE CURRENT EDITION OF WSDOT STANDARD SPECIFICATIONS. A COPY OF THESE DOCUMENTS SHALL BE ON SITE DURING CONSTRUCTION.
2. A COPY OF THE APPROVED PLAN MUST BE ON SITE WHENEVER CONSTRUCTION IS IN PROGRESS.
3. ERRORS AND OMISSIONS ON THE PERMITTED PLANS MUST BE CORRECTED BY THE ENGINEER AND APPROVED BY THE CITY OF KIRKLAND.
4. ALL PERMITS REQUIRED FOR WORK MUST BE OBTAINED PRIOR TO THE START OF CONSTRUCTION.
5. PRIOR TO THE START OF CONSTRUCTION , THE CONTRACTOR SHALL SCHEDULE AND ATTEND A PRECONSTRUCTION MEETING WITH THE CITY OF KIRKLAND AND NORTHSHORE UTILITY DISTRICT.
6. ALL DAMAGE TO CITY INFRASTRUCTURE CAUSED BY THE CONSTRUCTION SHALL BE IMMEDIATELY REPORTED AND REPAIRED AS REQUIRED BY THE CITY OF KIRKLAND.
7. DATUM: NAVD 88.
8. SURVEYING AND STAKING OF ALL IMPROVEMENTS SHALL BE COMPLETED PRIOR TO CONSTRUCTION.
9. THE CONTRACTOR SHALL BE RESPONSIBLE FOR REFERENCING AND REPLACING ALL MONUMENTS THAT MAY BE DISTURBED, DESTROYED OR REMOVED BY THE PROJECT AND SHALL FILE AN APPLICATION FOR PERMIT TO REMOVE OR DESTROY A SURVEY MONUMENT WITH THE WASHINGTON STATE DEPARTMENT OF NATURAL RESOURCES, PURSUANT TO RCW 58.24.040(8).
10. THE CONTRACTOR SHALL LOCATE AND PROTECT ALL CASTINGS AND UTILITIES DURING CONSTRUCTION.
11. THE CONTRACTOR SHALL CONTACT THE UNDERGROUND UTILITIES LOCATOR SERVICE (1-800-424-5555) AT LEAST 48 HOURS PRIOR TO CONSTRUCTION.
12. IT IS THE SOLE RESPONSIBILITY OF THE CONTRACTOR TO VERIFY THE ACCURACY OF ALL UTILITY LOCATIONS SHOWN AND TO FURTHER DISCOVER AND AVOID ANY OTHER UTILITIES NOT SHOWN WHICH MAY BE AFFECTED BY THE IMPLEMENTATION OF THIS PLAN.
13. THE CONTRACTOR SHALL ADJUST ALL EXISTING MANHOLE RIMS, DRAINAGE STRUCTURE LIDS, VALVE BOXES, AND UTILITY ACCESS STRUCTURES TO FINISH GRADE WITHIN AREAS AFFECTED BY THE PROPOSED IMPROVEMENTS.
14. THE CONTRACTOR SHALL PROVIDE FOR ALL TESTING AS REQUIRED BY PROJECT OWNER.
15. INSPECTION AND ACCEPTANCE OF ALL WORK SHALL BE DONE BY REPRESENTATIVES OF OWNER. IT SHALL BE THE CONTRACTOR'S RESPONSIBILITY TO COORDINATE AND SCHEDULE APPROPRIATE INSPECTIONS ALLOWING FOR PROPER ADVANCE NOTICE. THE OWNER MAY REQUIRE REMOVAL AND RECONSTRUCTION OF ANY ITEMS PLACED THAT DO NOT MEET STANDARDS AND SPECIFICATIONS OR THAT WERE CONSTRUCTED WITHOUT APPROPRIATE INSPECTIONS.
16. THE CONTRACTOR SHALL PROVIDE A PLAN FOR STORMWATER AND EROSION CONTROL AND INSTALL, MAINTAIN AND REMOVE TEMPORARY FACILITIES FOR CONSTRUCTION ACTIVITIES. AS CONSTRUCTION PROGRESSES AND CONDITIONS DICTATE, ADDITIONAL CONTROL FACILITIES MAY BE REQUIRED. DURING THE COURSE OF CONSTRUCTION IT SHALL BE THE OBLIGATION AND RESPONSIBILITY OF THE CONTRACTOR TO ADDRESS ANY NEW CONDITIONS THAT MAY BE CREATED BY THE CONTRACTOR'S ACTIVITIES AND TO PROVIDE ADDITIONAL FACILITIES THAT MAY BE NEEDED TO PROTECT ADJACENT PROPERTIES.
17. ALL TRAFFIC CONTROL SHALL BE IN ACCORDANCE WITH THE CITY OF KIRKLAND STANDARDS. AN APPROVED TRAFFIC CONTROL PLAN WILL BE REQUIRED FOR ALL ARTERIAL STREETS PRIOR TO BEGINNING CONSTRUCTION.
18. ALL WORK PERFORMED BY UTILITY PURVEYORS TO REPAIR, REMOVE OR RELOCATE EXISTING UTILITIES SHALL BE DONE AT THE CONTRACTOR'S EXPENSE.
19. CARE SHALL BE EXERCISED WHEN EXCAVATING OR REMOVING PAVEMENT NEAR EXISTING CHARGED WATER MAINS. CAST IRON WATER MAINS ARE KNOWN TO BE SENSITIVE TO EXCESSIVE VIBRATION. COORDINATE PROTECTION METHODS WITH NORTHSHORE UTILITY DISTRICT.

NORTHSHORE UTILITY DISTRICT WATER GENERAL NOTES

1. ALL WORK AND MATERIALS SHALL BE IN ACCORDANCE WITH THE DEVELOPER EXTENSION AGREEMENT, THE STANDARD SPECIFICATIONS AND THE STANDARD DETAILS OF NORTHSHORE UTILITY DISTRICT.

UTILITY LOCATES:
2. THE APPROXIMATE LOCATIONS OF EXISTING UTILITIES ARE SHOWN ON PLANS AND PROFILES FOR CONVENIENCE. THE CONTRACTOR SHALL BE RESPONSIBLE FOR VERIFICATION OF UTILITY LOCATIONS SHOWN AND FOR DISCOVERY OF POSSIBLE ADDITIONAL UTILITIES NOT SHOWN ON PLANS.
3. IT SHALL BE THE RESPONSIBILITY OF THE CONTRACTOR TO HAVE LOCATED,BY APPROPRIATE UTILITY DISTRICTS OR COMPANIES, ALL UNDERGROUND UTILITIES PRIOR TO BEGINNING CONSTRUCTION.
4. FOR UTILITY LOCATES IN KING COUNTY, CALL 1-800-424-5555 PRIOR TO DIGGING.

PERMITS:
5. THE DEVELOPER IS RESPONSIBLE FOR OBTAINING ALL REGULATORY PERMITS EXCEPT THE RIGHT-OF-WAY PERMIT, WHICH NORTHSHORE UTILITY DISTRICT OBTAINS.
6. ALL WORK IN RIGHTS-OF-WAY SHALL BE IN ACCORDANCE WITH THE REQUIREMENTS OF THE PERMITTING AGENCY.

PRE-CON:
7. A PRE-CONSTRUCTION CONFERENCE SHALL BE HELD AT NORTHSHORE UTILITY DISTRICTS OFFICE PRIOR TO THE START OF CONSTRUCTION. DISTRICT STAFF WILL NOTIFY THE APPROPRIATE AGENCIES OR REPRESENTATIVES.

SURVEYING:
8. PRIOR TO CONSTRUCTING ANY WATER MAINS, THE STREET CENTERLINES OF THE DEVELOPMENT, CENTER OF CUL-DE-SACS, ALL WATERLINE EASEMENTS AND ALL LOT CORNERS SHALL BE STAKED. THE MAXIMUM STATIONING INTERVAL WILL BE 50 FEET WITH THE STATION NUMBER ON EACH STAKE.
9. HORIZONTAL CONTROL DATA SHALL BE NAD 83/91. VERTICAL CONTROL SHALL BE NAVD-88 DATUM.
10. AT THE CONCLUSION OF CONSTRUCTION, THE DEVELOPER'S REGISTERED PROFESSIONAL SURVEYOR SHALL PREPARE A DRAWING BASED ON THE SURVEYED LOCATION OF ALL APPURTENANCES INSTALLED, INCLUDING BUT NOT LIMITED TO, WATER MAIN, METER BOXES, BLOWOFFS, VALVES BOXES, HYDRANTS AND BENDS. THE DISTRICT WILL PROVIDE LOCATES TO ASSIST THE SURVEYOR IN LOCATING THE WATER MAIN BETWEEN APPURTENANCES AND LOCATING THE BENDS. THE DRAWING SHALL BE PROVIDED TO THE DISTRICT IN AUTOCAD FORMAT, R 2000 OR NEWER. IN ADDITION, ALL WATER EASEMENTS SHALL BE STAKED AND FLAGGED AT THEIR INTERSECTION WITH PROPERTY LINES AND AT 25-FOOT STATIONS ALONG THE EASEMENT LINES.

CONSTRUCTION:
11. THE WATER MAIN SHALL BE PLACED AS SHOWN ON PLAN.
12. A MINIMUM TEN(10) FOOT HORIZONTAL SEPARATION MUST BE MAINTAINED BETWEEN THE SANITARY SEWER LINE AND THE WATER MAIN.
13. A FIVE(5) FOOT HORIZONTAL SEPARATION SHALL BE MAINTAINED BETWEEN ALL WATER FACILITIES AND UNDERGROUND POWER AND TELEPHONE FACILITIES, UNLESS OTHERWISE APPROVED BY THE DISTRICT.
14. DISTRICT VALVES SHALL ONLY BE OPERATED BY DISTRICT PERSONNEL.

MATERIALS:
15. ALL WATER MAIN PIPING SHALL BE DUCTILE-IRON MINIMUM THICKNESS CLASS 52, CEMENT-MORTAR LINED AND TYTON JOINT WITH RESTRAINED JOINT GASKETS. ALL WATER MAIN PIPING TO MEET THE REQUIREMENTS OF AWWA C-151.
16. ALL WATER MAIN FITTINGS SHALL BE CEMENT-MORTAR LINED AND SHALL BE INSTALLED WITH MEGA-LUG RESTRAINED JOINT AND MEET THE REQUIREMENTS OF AWWA C-153.
17. POLYETHYLENE ENCASEMENT TO MEET THE AWWA STANDARD C-105. ANY TEARS OR OPENINGS MADE FOR SERVICES OR TAPS SHALL BE REPAIRED WITH AN ADHESIVE TAPE.
18. ALL WATER MAIN PIPES AND SERVICES SHALL BE INSTALLED WITH A 14 (FOURTEEN) GAUGE, CONTINUOUS, SOLID-CORE, NEOPRENE COATED LOCATING WIRE. ANY CONNECTIONS OR SPLICES SHALL BE MADE WITH SPLIT-BOLT WIRE CONNECTORS.

PLACEMENT:
19. FIRE HYDRANT LOCATIONS TO BE APPROVED BY THE FIRE MARSHAL OF JURISDICTION.
20. WATER SERVICE LINE AND METER LOCATIONS WILL BE COORDINATED WITH THE DEVELOPER'S ENGINEER AFTER A THOROUGH REVIEW OF ALL UTILITY FACILITIES.
    - 20.1. THE METER LOCATION SHALL BE WITHIN THREE (3) FEET OF THE PROPERTY LINE THAT IS PERPENDICULAR TO THE RIGHT-OF-WAY AND WITHIN ONE(1) FOOT OF THE EDGE OF PROPERTY ON THE RIGHT-OF-WAY SIDE UNLESS OTHERWISE APPROVED IN WRITING BY THE DISTRICT.
    - 20.2. AFTER INSTALLATION OF THE METER AND BOX, A 2X4 BOARD PAINTED WHITE WITH "WATER SERVICE" STENCILED ONTO IT WILL BE DRIVEN INTO THE GROUND BEHIND THE METER BOX.

Call 811 two business days before you dig

TCA
ARCHITECTURE + PLANNING + DESIGN
6211 ROOSEVELT WAY NORTHEAST
SEATTLE, WA 98115
tel: (206) 522-3830
fax: (206) 522-2456

kpff
1601 5th Avenue, Suite 1600
Seattle, WA 98101
206.622.5822
www.kpff.com

JEREMY S. FERRIS
STATE OF WASHINGTON
50847
REGISTERED PROFESSIONAL ENGINEER
8/10/2020

BID SET

No.	Description	Date:
2	ADDENDUM # 2	8/10/20

Project Title:

FIRE STATION 24
City of Kirkland
Kirkland, Washington

Sheet Title:

COVER SHEET AND NOTES

Scale: AS NOTED
Project No. : 1700011
Date : JULY 21, 2020

Sheet Number :
2
W1.0

Z:\1700001-1700999\1700011 (Kirkland Fire Sta 24)\CADD\Design\CD\W1.0 FS24 CVR.dwg
Aug 10, 2020 - 10:58am tereson

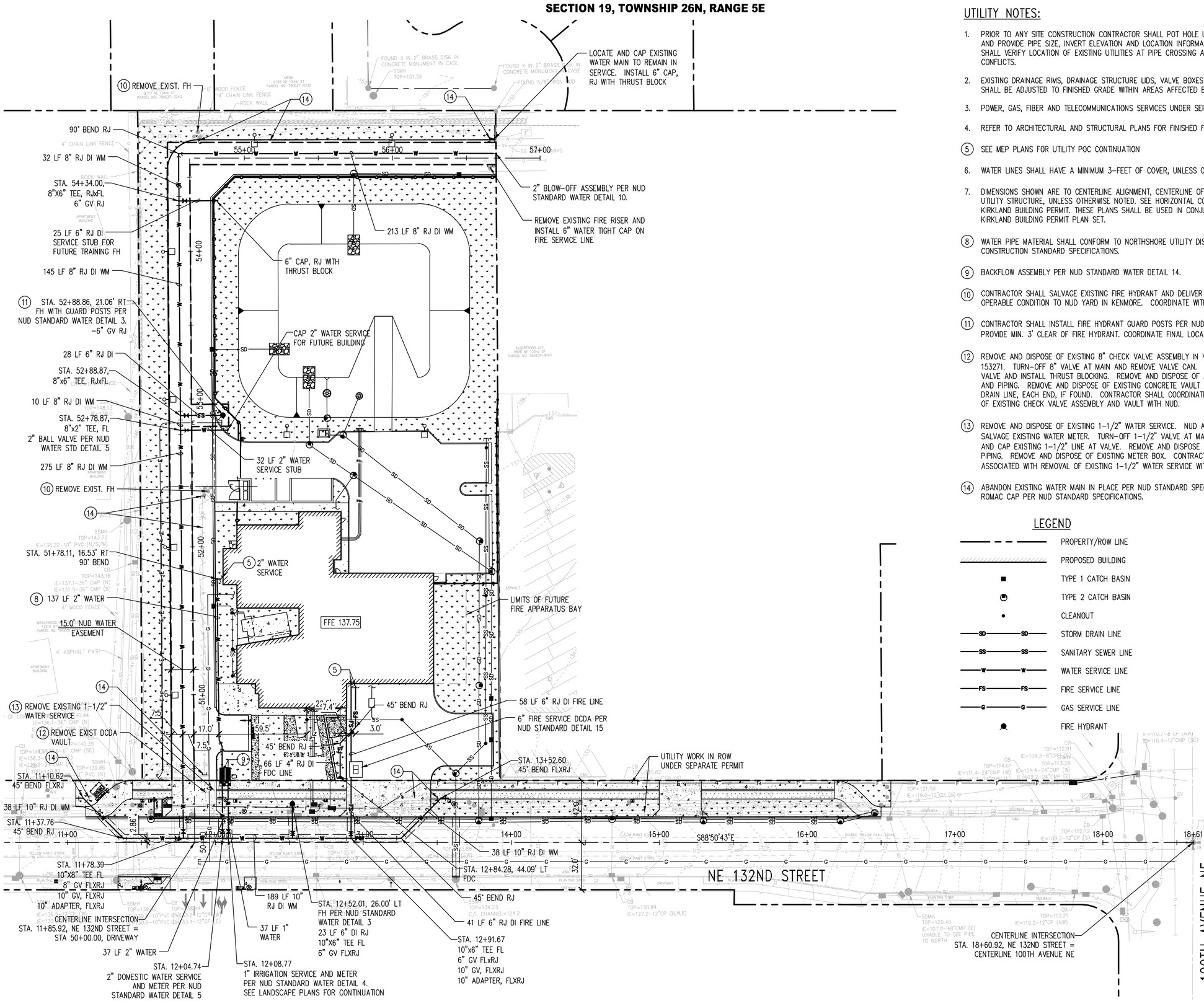

UTILITY NOTES:

1. PRIOR TO ANY SITE CONSTRUCTION CONTRACTOR SHALL POT HOLE UTILITIES AT POINTS OF CONNECTION AND PROVIDE PIPE SIZE, INVERT ELEVATION AND LOCATION INFORMATION TO ENGINEER. CONTRACTOR SHALL VERIFY LOCATION OF EXISTING UTILITIES AT PIPE CROSSING AND NOTIFY ENGINEER OF ANY CONFLICTS.
2. EXISTING DRAINAGE RIMS, DRAINAGE STRUCTURE LIDS, VALVE BOXES AND UTILITY ACCESS STRUCTURES SHALL BE ADJUSTED TO FINISHED GRADE WITHIN AREAS AFFECTED BY PROPOSED IMPROVEMENTS.
3. POWER, GAS, FIBER AND TELECOMMUNICATIONS SERVICES UNDER SEPARATE PERMIT.
4. REFER TO ARCHITECTURAL AND STRUCTURAL PLANS FOR FINISHED FLOOR ELEVATIONS.

(5) SEE MEP PLANS FOR UTILITY POC CONTINUATION

6. WATER LINES SHALL HAVE A MINIMUM 3-FEET OF COVER, UNLESS OTHERWISE NOTED.
7. DIMENSIONS SHOWN ARE TO CENTERLINE ALIGNMENT, CENTERLINE OF UTILITY LINES OR CENTER OF UTILITY STRUCTURE, UNLESS OTHERWISE NOTED. SEE HORIZONTAL CONTROL PLAN UNDER CITY OF KIRKLAND BUILDING PERMIT. THESE PLANS SHALL BE USED IN CONJUNCTION WITH THE CITY OF KIRKLAND BUILDING PERMIT PLAN SET.

(8) WATER PIPE MATERIAL SHALL CONFORM TO NORTHSHORE UTILITY DISTRICT (NUD) MATERIALS OF CONSTRUCTION STANDARD SPECIFICATIONS.

(9) BACKFLOW ASSEMBLY PER NUD STANDARD WATER DETAIL 14.

(10) CONTRACTOR SHALL SALVAGE EXISTING FIRE HYDRANT AND DELIVER SALVAGED HYDRANT IN CLEAN AND OPERABLE CONDITION TO NUD YARD IN KENMORE. COORDINATE WITH NUD FOR DELIVERY.

(11) CONTRACTOR SHALL INSTALL FIRE HYDRANT GUARD POSTS PER NUD STANDARD SPECIFICATIONS TO PROVIDE MIN. 3' CLEAR OF FIRE HYDRANT. COORDINATE FINAL LOCATION IN THE FIELD WITH NUD.

(12) REMOVE AND DISPOSE OF EXISTING 8" CHECK VALVE ASSEMBLY IN VAULT. NUD ACCOUNT NUMBER 153271. TURN-OFF 8" VALVE AT MAIN AND REMOVE VALVE CAN. CAP OR PLUG EXISTING 8" LINE AT VALVE AND INSTALL THRUST BLOCKING. REMOVE AND DISPOSE OF ALL INTERNAL VAULT EQUIPMENT AND PIPING. REMOVE AND DISPOSE OF EXISTING CONCRETE VAULT AND LID. CAP OR PLUG EXISTING DRAIN LINE, EACH END, IF FOUND. CONTRACTOR SHALL COORDINATE WORK ASSOCIATED WITH REMOVAL OF EXISTING CHECK VALVE ASSEMBLY AND VAULT WITH NUD.

(13) REMOVE AND DISPOSE OF EXISTING 1-1/2" WATER SERVICE. NUD ACCOUNT NUMBER 153270. HUD TO SALVAGE EXISTING WATER METER. TURN-OFF 1-1/2" VALVE AT MAIN AND REMOVE VALVE CAN. CUT AND CAP EXISTING 1-1/2" LINE AT VALVE. REMOVE AND DISPOSE OF ALL INTERNAL EQUIPMENT AND PIPING. REMOVE AND DISPOSE OF EXISTING METER BOX. CONTRACTOR SHALL COORDINATE WORK ASSOCIATED WITH REMOVAL OF EXISTING 1-1/2" WATER SERVICE WITH NUD.

(14) ABANDON EXISTING WATER MAIN IN PLACE PER NUD STANDARD SPECIFICATIONS INSTALL WATERTIGHT ROMAC CAP PER NUD STANDARD SPECIFICATIONS.

LEGEND

- PROPERTY/ROW LINE
- PROPOSED BUILDING
- TYPE 1 CATCH BASIN
- TYPE 2 CATCH BASIN
- CLEANOUT
- SD — SD STORM DRAIN LINE
- SS — SS SANITARY SEWER LINE
- W — W WATER SERVICE LINE
- FS — FS FIRE SERVICE LINE
- G — G GAS SERVICE LINE
- FIRE HYDRANT

Call 811 two business days before you dig

TCA
ARCHITECTURE + PLANNING + DESIGN
6211 ROOSEVELT WAY NORTHEAST
SEATTLE, WA 98115
tel: (206) 522-3830
fax: (206) 522-2456

kpff
1601 5th Avenue, Suite 1600
Seattle, WA 98101
206.622.5822
www.kpff.com

JEREMY S. FRIEDS, STATE OF WASHINGTON, 35847, REGISTERED PROFESSIONAL ENGINEER
8/10/2020

BID SET

No.	Description	Date:
2	ADDENDUM # 2	8/10/20

Project Title:

FIRE STATION 24
City of Kirkland
Kirkland, Washington

Sheet Title:

WATER UTILITY PLAN

Scale: AS NOTED
Project No. 1700011
Date : JULY 21, 2020

Sheet Number :

W2.0

Z:\1700001-1700999\1700011 (Kirkland Fire Sta 24)\CADD\Design\CD\W2.0KFS24- UT.dwg
Aug 10, 2020 - 10:58am teressad

SECTION 19, TOWNSHIP 26N, RANGE 5E

FIRE STATION 24

NORTHSHORE UTILITY DISTRICT

SEWER PLAN

9824 NE 132ND STREET

KIRKLAND, WA 98034

SURVEY INFORMATION
SURVEY BY: DAVID EVANS AND ASSOCIATES, INC.
DATED: AUGUST 30, 2019

BASIS OF BEARING
THE SOUTHEAST LINE OF SECTION 19 AS BEING NORTH 88° 50'43" WEST PER ZEE LANE SHORT PLAT A.F.# 20150723900005.

VERTICAL DATUM
ELEVATIONS SHOWN HEREON ARE GEOID-DERIVED NAVD88, GEOID 12B SEPARATIONS WERE APPLIED TO SOLVED ELLIPSOID HEIGHTS.

SITE BENCHMARK: CITY OF KIRKLAND CONTROL POINT NO. 133, LOCATED IN THE NORTHWEST QUADRANT OF THE INTERSECTION OF NE 100TH AVE AND NE 132ND ST, ELEVATION: 115.25 U.S. SURVEY FEET

HORIZONTAL CONTROL SHALL BE NAD '83/'91
VERTICAL CONTROL SHALL BE NAVD '88

PROJECT TEAM

OWNER
CITY OF KIRKLAND
123 5TH AVENUE
KIRKLAND, WA 98033
ANNEKE DAVIS, PE
(425) 587-3828
adavis@kirklandwa.gov

CIVIL ENGINEER
KPFF CONSULTING ENGINEERS
1601 FIFTH AVENUE, SUITE 1600
SEATTLE, WA 98101
(206) 622-5822
TOM JONES
tom.jones@kpff.com

ARCHITECT
TCA ARCHITECTURE PLANNING
6211 ROOSEVELT WAY NE
SEATTLE, WA 98115
(206) 522-3830
FOREST HOOKER
forest@tca-inc.com

SURVEYOR
DAVID EVANS AND ASSOCIATES INC.
1620 W MARINE VIEW DRIVE
EVERETT, WA 98201
(425) 405-1513
GIL LAAS, PLS
gjla@deainc.com

GEOTECHNICAL
HWA GEOSCIENCES INC
21312 30TH DRIVE SE, SUITE 110
BOTHLL, WA 98021
(425) 774-0106
BRYAN HAWKINS, PE
bhawkins@hwageo.com

LANDSCAPE
AHBL INC
1206 6TH AVENUE, SUITE 1620
SEATTLE, WA 98101
(206) 267-2425
MEREDITH SESSIONS
msessions@ahbl.com

SERVICE PROVIDERS:

WATER
NORTHSHORE UTILITY DISTRICT
6830 NE 185TH STREET
KENMORE, WA 98028
(425) 398-4400

SEWER
NORTHSHORE UTILITY DISTRICT
6830 NE 185TH STREET
KENMORE, WA 98028
(425) 398-4400

STORM
CITY OF KIRKLAND
123 5TH AVENUE
KIRKLAND, WA 98033
(425) 587-3800

POWER
PUGET SOUND ENERGY
10885 NE 47TH STREET, SUITE 1200
PO BOX 97034
BELLEVUE, WA 98009
(425) 454-6363
(888) 225-5773

GAS
PUGET SOUND ENERGY
10885 NE 47TH STREET, SUITE 1200
PO BOX 97034
BELLEVUE, WA 98009
(425) 454-6363
(888) 225-5773

SURVEY LEGEND

FOUND IRON ROD AS NOTED	●	GUY ANCHOR	←
FOUND MONUMENT AS NOTED		UTILITY POLE	
WATER TONE LINE		WATER VALVE	WV
SANITARY SEWER LINE		WATER METER	WM
OVERHEAD UTILITY LINE		GAS METER	GM
POWER TONE LINE		FIRE HYDRANT	
GAS TONE LINE		CURB & GUTTER	C&G
TELEPHONE TONE LINE		EXTRUDED CURB	EC
TRAFFIC SIGNAL BOX	TS	EXTRUDED CURB	
ELECTRICAL BOX	E	ELECTRICAL TRANSFORMER	
WATER VAULT	W	BOLLARD	●
ELECTRIC GROUND ROD	●	MAILBOX	
STORM DRAIN MANHOLE	D	FIRE DEPARTMENT CONNECTION	
SEWER MANHOLE	S	AREA DRAIN	
CATCH BASIN		AREA LIGHT	
SIGN		CONIFEROUS TREE	
STREET LIGHT			

CONTRACTOR IS ALERTED TO THE FACT THAT WORK WILL BE ACCOMPLISHED AROUND ACTIVE PSE GAS AND ENERGIZED ELECTRICAL FACILITIES THAT ARE SERVING EXISTING CUSTOMERS. CONTRACTOR SHALL COORDINATE WITH PSE TO DETERMINE WHICH FACILITIES ARE ACTIVE AND ENERGIZED AND SHALL IMPLEMENT SAFETY PROCEDURES PER PSE REQUIREMENTS. CONTRACTOR SHALL COORDINATE WITH PSE TO ENSURE THAT FACILITIES ARE IN PLACE TO MAINTAIN SERVICE TO CUSTOMERS THROUGHOUT CONSTRUCTION.

SHEET INDEX	
SHEET NO	SHEET TITLE
S1.0	COVER SHEET AND NOTES
S2.0	SEWER UTILITY PLAN AND PROFILE

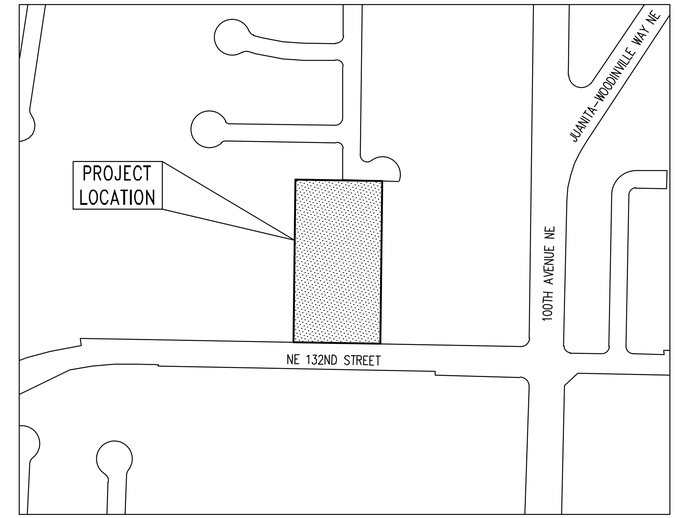

VICINITY MAP
SCALE: 1" = 200'±
NORTH

GENERAL CONSTRUCTION NOTES

1. ALL WORK SHALL CONFORM TO THE CURRENT EDITION OF NORTHSHORE UTILITY DISTRICT STANDARD PLANS AND SPECIFICATIONS, CURRENT EDITION OF CITY OF KIRKLAND PRE-APPROVED PLANS AND THE CURRENT EDITION OF WSDOT STANDARD SPECIFICATIONS. A COPY OF THESE DOCUMENTS SHALL BE ON SITE DURING CONSTRUCTION.
2. A COPY OF THE APPROVED PLAN MUST BE ON SITE WHENEVER CONSTRUCTION IS IN PROGRESS.
3. ERRORS AND OMISSIONS ON THE PERMITTED PLANS MUST BE CORRECTED BY THE ENGINEER AND APPROVED BY THE CITY OF KIRKLAND.
4. ALL PERMITS REQUIRED FOR WORK MUST BE OBTAINED PRIOR TO THE START OF CONSTRUCTION.
5. PRIOR TO THE START OF CONSTRUCTION , THE CONTRACTOR SHALL SCHEDULE AND ATTEND A PRECONSTRUCTION MEETING WITH THE CITY OF KIRKLAND AND NORTHSHORE UTILITY DISTRICT.
6. ALL DAMAGE TO CITY INFRASTRUCTURE CAUSED BY THE CONSTRUCTION SHALL BE IMMEDIATELY REPORTED AND REPAIRED AS REQUIRED BY THE CITY OF KIRKLAND.
7. DATUM: NAVD 88.
8. SURVEYING AND STAKING OF ALL IMPROVEMENTS SHALL BE COMPLETED PRIOR TO CONSTRUCTION.
9. THE CONTRACTOR SHALL BE RESPONSIBLE FOR REFERENCING AND REPLACING ALL MONUMENTS THAT MAY BE DISTURBED, DESTROYED OR REMOVED BY THE PROJECT AND SHALL FILE AN APPLICATION FOR PERMIT TO REMOVE OR DESTROY A SURVEY MONUMENT WITH THE WASHINGTON STATE DEPARTMENT OF NATURAL RESOURCES, PURSUANT TO RCW 58.24.040(8).
10. THE CONTRACTOR SHALL LOCATE AND PROTECT ALL CASTINGS AND UTILITIES DURING CONSTRUCTION.
11. THE CONTRACTOR SHALL CONTACT THE UNDERGROUND UTILITIES LOCATOR SERVICE (1-800-424-5555) AT LEAST 48 HOURS PRIOR TO CONSTRUCTION.
12. IT IS THE SOLE RESPONSIBILITY OF THE CONTRACTOR TO VERIFY THE ACCURACY OF ALL UTILITY LOCATIONS SHOWN AND TO FURTHER DISCOVER AND AVOID ANY OTHER UTILITIES NOT SHOWN WHICH MAY BE AFFECTED BY THE IMPLEMENTATION OF THIS PLAN.
13. THE CONTRACTOR SHALL ADJUST ALL EXISTING MANHOLE RIMS, DRAINAGE STRUCTURE LIDS, VALVE BOXES, AND UTILITY ACCESS STRUCTURES TO FINISH GRADE WITHIN AREAS AFFECTED BY THE PROPOSED IMPROVEMENTS.
14. THE CONTRACTOR SHALL PROVIDE FOR ALL TESTING AS REQUIRED BY PROJECT OWNER.
15. INSPECTION AND ACCEPTANCE OF ALL WORK SHALL BE DONE BY REPRESENTATIVES OF OWNER. IT SHALL BE THE CONTRACTOR'S RESPONSIBILITY TO COORDINATE AND SCHEDULE APPROPRIATE INSPECTIONS ALLOWING FOR PROPER ADVANCE NOTICE. THE OWNER MAY REQUIRE REMOVAL AND RECONSTRUCTION OF ANY ITEMS PLACED THAT DO NOT MEET STANDARDS AND SPECIFICATIONS OR THAT WERE CONSTRUCTED WITHOUT APPROPRIATE INSPECTIONS.
16. THE CONTRACTOR SHALL PROVIDE A PLAN FOR STORMWATER AND EROSION CONTROL AND INSTALL, MAINTAIN AND REMOVE TEMPORARY FACILITIES FOR CONSTRUCTION ACTIVITIES. AS CONSTRUCTION PROGRESSES AND CONDITIONS DICTATE, ADDITIONAL CONTROL FACILITIES MAY BE REQUIRED. DURING THE COURSE OF CONSTRUCTION IT SHALL BE THE OBLIGATION AND RESPONSIBILITY OF THE CONTRACTOR TO ADDRESS ANY NEW CONDITIONS THAT MAY BE CREATED BY THE CONTRACTOR'S ACTIVITIES AND TO PROVIDE ADDITIONAL FACILITIES THAT MAY BE NEEDED TO PROTECT ADJACENT PROPERTIES.
17. ALL TRAFFIC CONTROL SHALL BE IN ACCORDANCE WITH THE CITY OF KIRKLAND STANDARDS. AN APPROVED TRAFFIC CONTROL PLAN WILL BE REQUIRED FOR ALL ARTERIAL STREETS PRIOR TO BEGINNING CONSTRUCTION.
18. ALL WORK PERFORMED BY UTILITY PURVEYORS TO REPAIR, REMOVE OR RELOCATE EXISTING UTILITIES SHALL BE DONE AT THE CONTRACTOR'S EXPENSE.
19. CARE SHALL BE EXERCISED WHEN EXCAVATING OR REMOVING PAVEMENT NEAR EXISTING CHARGED WATER MAINS. CAST IRON WATER MAINS ARE KNOWN TO BE SENSITIVE TO EXCESSIVE VIBRATION. COORDINATE PROTECTION METHODS WITH NORTHSHORE UTILITY DISTRICT.

NORTHSHORE UTILITY DISTRICT SEWER GENERAL NOTES

1. ALL WORK AND MATERIALS SHALL BE IN ACCORDANCE WITH THE DEVELOPER EXTENSION AGREEMENT, THE STANDARD SPECIFICATIONS, STANDARD DETAILS OF NORTHSHORE UTILITY DISTRICT.

UTILITY LOCATES:
2. THE APPROXIMATE LOCATIONS OF EXISTING UTILITIES ARE SHOWN ON PLANS AND PROFILES FOR CONVENIENCE. THE CONTRACTOR SHALL BE RESPONSIBLE FOR VERIFICATION OF UTILITY LOCATIONS SHOWN AND FOR DISCOVERY OF POSSIBLE ADDITIONAL UTILITIES NOT SHOWN ON PLANS.
3. IT SHALL BE THE RESPONSIBILITY OF THE CONTRACTOR TO HAVE LOCATED, BY APPROPRIATE UTILITY DISTRICTS OR COMPANIES, ALL UNDERGROUND UTILITIES PRIOR TO BEGINNING CONSTRUCTION.
4. FOR UTILITY LOCATES IN KING COUNTY, CALL 1-800-424-5555 PRIOR TO DIGGING.

PERMITS:
5. THE DEVELOPER IS RESPONSIBLE FOR OBTAINING ALL REGULATORY PERMITS EXCEPT THE RIGHT-OF-WAY PERMIT, WHICH NORTHSHORE UTILITY DISTRICT OBTAINS.
6. ALL WORK IN RIGHTS-OF-WAY SHALL BE IN ACCORDANCE WITH THE REQUIREMENTS OF THE PERMITTING AGENCY.

PRE-CON:
7. A PRE-CONSTRUCTION CONFERENCE SHALL BE HELD AT NORTHSHORE UTILITY DISTRICTS OFFICE PRIOR TO THE START OF CONSTRUCTION. DISTRICT STAFF WILL NOTIFY THE APPROPRIATE AGENCIES OR REPRESENTATIVES.

SURVEYING:
8. PRIOR TO CONSTRUCTING ANY SEWER MAINS, THE STREET CENTERLINES OF THE DEVELOPMENT, CENTER OF CUL-DE-SACS, ALL SEWER LINE EASEMENTS AND ALL LOT CORNERS SHALL BE STAKED. THE MAXIMUM STATIONING INTERVAL SHALL BE 50 FEET WITH THE STATION NUMBER ON EACH STAKE.
9. HORIZONTAL CONTROL DATA SHALL BE NAD '83/91. VERTICAL CONTROL SHALL BE NAVD-88 DATUM.
10. AT THE CONCLUSION OF CONSTRUCTION, THE DEVELOPER'S REGISTERED PROFESSIONAL SURVEYOR SHALL PREPARE A DRAWING BASED ON THE SURVEYED LOCATION OF ALL AT-GRADE APPURTENANCES INSTALLED, INCLUDING BUT NOT LIMITED TO, LOCATION OF EXISTING MANHOLES INCLUDING RIM & ALL INVERT ELEVATIONS AND NEW MANHOLE LOCATIONS INCLUDING RIM & ALL INVERT ELEVATIONS. THE DRAWING SHALL BE PROVIDED TO THE DISTRICT IN AUTOCAD FORMAT, R 2000 OR NEWER. IN ADDITION, ALL SEWER EASEMENTS SHALL BE STAKED AND FLAGGED AT THEIR INTERSECTION WITH PROPERTY LINES AND AT 25 FOOT STATIONS ALONG THE EASEMENT LINES.

CONSTRUCTION:
11. THE SEWER MAIN SHALL BE PLACED FIVE (5) FEET SOUTH OR WEST FROM THE CENTERLINE OF ROADWAY,UNLESS OTHERWISE SHOWN ON THE PLAN.
12. A MINIMUM TEN (10) FOOT HORIZONTAL SEPARATION MUST BE MAINTAINED BETWEEN THE SANITARY SEWER LINE AND THE WATER MAIN.
13. AFTER TRENCH BACKFILL AND COMPACTION, PVC SANITARY SEWER MAINS SHALL BE TESTED FOR DEFLECTION AS SPECIFIED IN SECTION 7-17.3(2)G OF THE WASHINGTON STATE DEPARTMENT OF TRANSPORTATION'S STANDARD SPECIFICATIONS FOR ROAD, BRIDGE AND MUNICIPAL CONSTRUCTION. TEST OBSERVATION AND INSPECTION BY NORTHSHORE UTILITY DISTRICT.
14. WHENEVER SANITARY SEWER CROSSES BELOW A WATER MAIN, THE SEWER SHALL BE LAID AT SUCH AN ELEVATION THAT THE TOP OF THE SEWER LINE IS AT LEAST EIGHTEEN (18) INCHES BELOW THE BOTTOM OF THE WATER MAIN.
15. ALL MANHOLES SHALL HAVE A MINIMUM DROP OF ONE-TENTH (0.10) FOOT AND FIVETENTHS (0.50) FOOT MAXIMUM DROP BETWEEN INVERT IN AND INVERT OUT.
16. MANHOLES IN THE PUBLIC RIGHT-OF-WAY SHALL BE A MINIMUM OF EIGHT(8) FEET IN DEPTH OR PER APPROVED PLANS.
17. MANHOLES NOT IN PAVED PUBLIC RIGHT-OF-WAY TO HAVE LOCKING LIDS AND ALL FRAMES SHALL BE LOCKING TYPE PER THE STANDARD DETAILS.
18. FOR PIPE SLOPES GREATER THAN 20%, RESTRAINED-JOINT DUCTILE IRON PIPE SHALL BE USED FOR EVERY JOINT.
19. SIDE SEWER STUBS SHALL HAVE A MINIMUM OF TWO(2) PERCENT SLOPE AND MAXIMUM OF FORTY-FIVE (45) DEGREE SLOPE. STUBS SHALL BE 6" MINIMUM DIAMETER. FOR ALL STUBS LESS THAN EIGHT(8) FEET IN DEPTH: INSTALL A THREE(3) INCH WIDE GREEN METALLIC DETECTOR TAPE 12" ABOVE THE PIPE, THE ENTIRE LENGTH OF THE STUB CONTINUING UP THE 2X4 SIDE SEWER MARKER POST. IDENTIFICATION ON THE TAPE SHALL INCLUDE THE WORDS "SANITARY SEWER".

MATERIALS:
20. SANITARY SEWER PIPE LESS THAN EIGHTEEN (18) FEET IN DEPTH AND LESS THAN 20% SLOPE SHALL BE PVC CONFORMING TO ASTM D-3034, SDR-35 AND SHALL BE BEDDED WITH CLEAN, GRANULAR MANUFACTURED PEA GRAVEL FROM 4" UNDER TO 6" OVER THE PIPE. SANITARY SEWER PIPE EIGHTEEN (18) FEET DEEP AND GREATER, OR ON A SLOPE OF 20% OR MORE, SHALL BE DUCTILE-IRON MINIMUM THICKNESS CLASS 52, CEMENT-MORTAR LINED AND TYTON JOINT. ALL DUCTILE-IRON PIPE MUST MEET THE REQUIREMENTS OF AWWA C-151.
21. HIGH-DENSITY POLYETHYLENE (HDPE) SHALL BE SDR-11 MINIMUM.

Call 811 two business days before you dig

TCA
ARCHITECTURE + PLANNING + DESIGN
6211 ROOSEVELT WAY NORTHEAST
SEATTLE, WA 98115
tel: (206) 522-3830
fax: (206) 522-2456

kpff
1601 5th Avenue, Suite 1600
Seattle, WA 98101
206.622.5822
www.kpff.com

JEREMY S. FERRIS
STATE OF WASHINGTON
50847
REGISTERED PROFESSIONAL ENGINEER
8/10/2020

BID SET

No.	Description	Date:
2	ADDENDUM # 2	8/10/20

Project Title:

FIRE STATION 24
City of Kirkland
Kirkland, Washington

Sheet Title:

COVER SHEET AND NOTES

Scale: AS NOTED
Project No. 1700011
Date : JULY 21, 2020

Sheet Number :
2
S1.0

Aug 10, 2020 - 10:28am teresad Z:\1700001-1700999\1700011 (Kirkland Fire Sta 24)\CADD\Design\CD\S1.0 FS24 CVR.dwg

SECTION 19, TOWNSHIP 26N, RANGE 5E

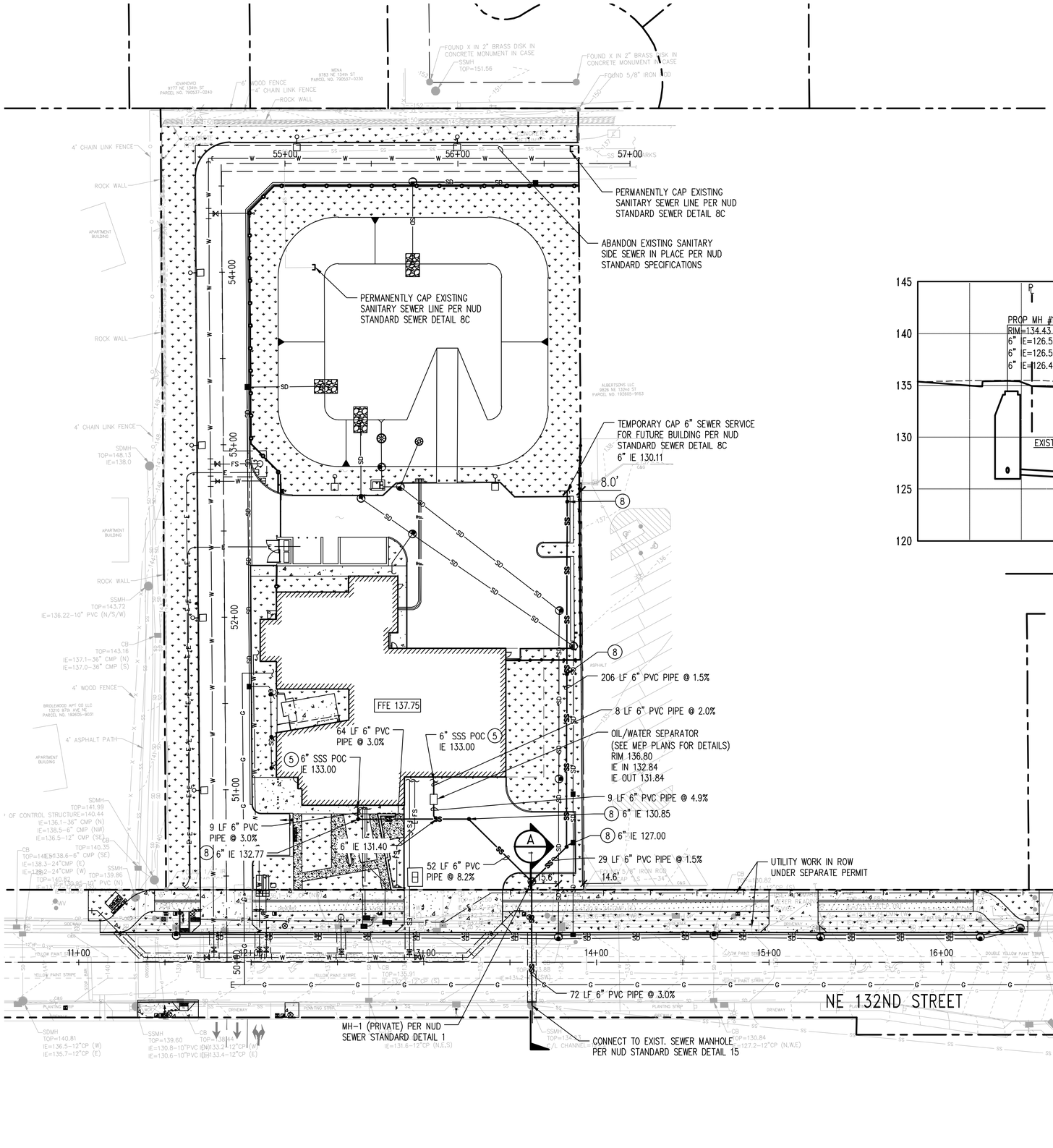

UTILITY NOTES:

1. PRIOR TO ANY SITE CONSTRUCTION CONTRACTOR SHALL POT HOLE UTILITIES AT POINTS OF CONNECTION AND PROVIDE PIPE SIZE, INVERT ELEVATION AND LOCATION INFORMATION TO ENGINEER. CONTRACTOR SHALL VERIFY LOCATION OF EXISTING UTILITIES AT PIPE CROSSING AND NOTIFY ENGINEER OF ANY CONFLICTS.
2. EXISTING DRAINAGE RIMS, DRAINAGE STRUCTURE LIDS, VALVE BOXES AND UTILITY ACCESS STRUCTURES SHALL BE ADJUSTED TO FINISHED GRADE WITHIN AREAS AFFECTED BY PROPOSED IMPROVEMENTS.
3. POWER, GAS, FIBER AND TELECOMMUNICATIONS SERVICES UNDER SEPARATE PERMIT.
4. REFER TO ARCHITECTURAL AND STRUCTURAL PLANS FOR FINISHED FLOOR ELEVATIONS.

(5) SEE MEP PLANS FOR UTILITY POC CONTINUATION

6. SANITARY SERVICE LINES SHALL HAVE A MINIMUM 2-FEET OF COVER, UNLESS OTHERWISE NOTED.
7. DIMENSIONS SHOWN ARE TO CENTERLINE ALIGNMENT, CENTERLINE OF UTILITY LINES OR CENTER OF UTILITY STRUCTURE, UNLESS OTHERWISE NOTED.

(8) SEWER CLEANOUT PER NUD STANDARD SEWER DETAIL 9. SEWER CLEANOUTS SHALL BE LOCATED EVERY 100 FEET PER NUD STANDARDS.

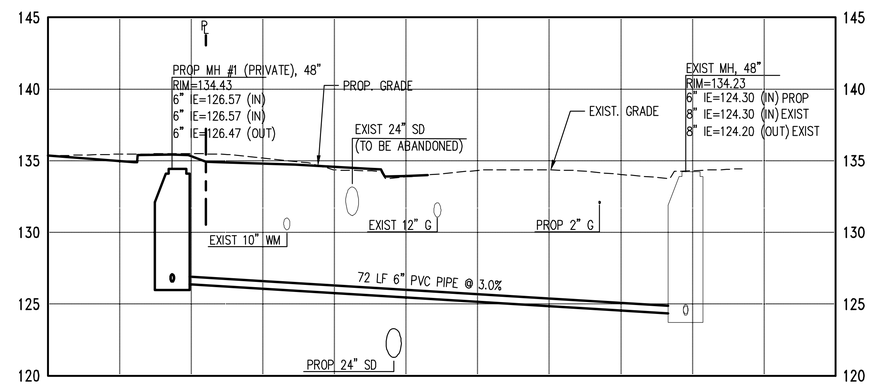

SANITARY SEWER PROFILE (A)

SCALE: 1" = 10' HORIZ, 1" = 5" VERT.

LEGEND

- PROPERTY/ROW LINE
- PROPOSED BUILDING
- TYPE 1 CATCH BASIN
- TYPE 2 CATCH BASIN
- CLEANOUT
- SD — STORM DRAIN LINE
- SS — SANITARY SEWER LINE
- W — WATER SERVICE LINE
- FS — FIRE SERVICE LINE
- G — GAS SERVICE LINE

0 15 30 60

1 inch = 30 feet

Call 811 two business days before you dig

TCA
ARCHITECTURE + PLANNING + DESIGN
6211 ROOSEVELT WAY NORTHEAST
SEATTLE, WA 98115
tel: (206) 522-3830
fax: (206) 522-2456

kpff
1601 5th Avenue, Suite 1600
Seattle, WA 98101
206.622.5822
www.kpff.com

8/10/2020

BID SET

No.	Description	Date:
2	ADDENDUM # 2	8/10/20

Project Title:

FIRE STATION 24

City of Kirkland
Kirkland, Washington

Sheet Title:

SEWER UTILITY PLAN AND PROFILE

Scale: AS NOTED

Project No. 1700011

Date : JULY 21, 2020

Sheet Number : 2

S2.0

Z:\1700001-1700999\1700011 (Kirkland Fire Sta 24)\CADD\Design\CD\S2.0 FS24-PP.dwg

Aug 10, 2020 - 10:58am teresad