CITY OF KIRKLAND

CEDAR CREEK CULVERT REPLACEMENT PROJECT

JOB NO. 11-20-PW CIP No. CSD0124

ADDENDUM NO. 1

TO THE PLANS, SPECIFICATIONS, PROPOSAL AND CONTRACT

Issued This Date:	Thursday, March 26, 2020
Bid Opening:	**April 7, 2020 @ 10:00 AM**
Place of Opening:	Kirkland City Hall, Council Chambers

Notice to All Plan holders:
This Addendum No. 1, containing the following revisions, additions, deletions, and/or clarifications is hereby made part of the Plan and Contract Documents for the above-named project. Bidders shall take this Addendum into consideration when preparing and submitting their bids and it shall be attached to the Contract Documents.

Contractors shall acknowledge receipt of this Addendum in the place provided on Proposal page P6. Failure to do so may disqualify the Bidder from consideration of its bid.

All other requirements of the contract documents remain in effect.

CONTRACT DOCUMENTS:

Item 1:
Location: Invitation to Bid
Description: To allow maximum flexibility for City Staff to respond to bidder questions. The City will allow contractors to submit questions via email to the following recipients.

Aparna Khanal: Akhanal@kirklandwa.gov

Debbie Cook: Debbie.Cook@rockpmservices.com

Item 2:
Location: Prevailing Wage Rates, Appendix A through E
Description: Delete Appendix cover sheets and replace with the attached Prevailing Wage Rates and Appendices.

Sincerely,

Debbie Cook, P.E.,
Project Manager

Rod Steitzer, P.E.
Capital Projects Supervisor

PREVAILING WAGE RATES

City of Kirkland

****

Overtime Codes

Overtime calculations are based on the hourly rate actually paid to the worker. On public works projects, the hourly rate must be not less than the prevailing rate of wage minus the hourly rate of the cost of fringe benefits actually provided for the worker.

1. ALL HOURS WORKED IN EXCESS OF EIGHT (8) HOURS PER DAY OR FORTY (40) HOURS PER WEEK SHALL BE PAID AT ONE AND ONE-HALF TIMES THE HOURLY RATE OF WAGE.

B. All hours worked on Saturdays shall be paid at one and one-half times the hourly rate of wage. All hours worked on Sundays and holidays shall be paid at double the hourly rate of wage.

C. The first two (2) hours after eight (8) regular hours Monday through Friday and the first ten (10) hours on Saturday shall be paid at one and one-half times the hourly rate of wage. All other overtime hours and all hours worked on Sundays and holidays shall be paid at double the hourly rate of wage.

D. The first two (2) hours before or after a five-eight (8) hour workweek day or a four-ten (10) hour workweek day and the first eight (8) hours worked the next day after either workweek shall be paid at one and one-half times the hourly rate of wage. All additional hours worked and all worked on Sundays and holidays shall be paid at double the hourly rate of wage.

E. The first two (2) hours after eight (8) regular hours Monday through Friday and the first eight (8) hours on Saturday shall be paid at one and one-half times the hourly rate of wage. All other hours worked Monday through Saturday, and all hours worked on Sundays and holidays shall be paid at double the hourly rate of wage.

F. The first two (2) hours after eight (8) regular hours Monday through Friday and the first ten (10) hours on Saturday shall be paid at one and one-half times the hourly rate of wage. All other overtime hours worked, except Labor Day, shall be paid at double the hourly rate of wage. All hours worked on Labor Day shall be paid at three times the hourly rate of wage.

G. The first ten (10) hours worked on Saturdays and the first ten (10) hours worked on a fifth calendar weekday in a four-ten hour schedule, shall be paid at one and one-half times the hourly rate of wage. All hours worked in excess of ten (10) hours per day Monday through Saturday and all hours worked on Sundays and holidays shall be paid at double the hourly rate of wage.

H. All hours worked on Saturdays (except makeup days if work is lost due to inclement weather conditions or equipment breakdown) shall be paid at one and one-half times the hourly rate of wage. All hours worked Monday through Saturday over twelve (12) hours and all hours worked on Sundays and holidays shall be paid at double the hourly rate of wage.

I. All hours worked on Sundays and holidays shall also be paid at double the hourly rate of wage.

J. The first two (2) hours after eight (8) regular hours Monday through Friday and the first ten (10) hours on Saturday shall be paid at one and one-half times the hourly rate of wage. All hours worked over ten (10) hours Monday through Saturday, Sundays and holidays shall be paid at double the hourly rate of wage.

K. All hours worked on Saturdays and Sundays shall be paid at one and one-half times the hourly rate of wage. All hours worked on holidays shall be paid at double the hourly rate of wage.

M. All hours worked on Saturdays (except makeup days if work is lost due to inclement weather conditions) shall be paid at one and one-half times the hourly rate of wage. All hours worked on Sundays and holidays shall be paid at double the hourly rate of wage.

N. All hours worked on Saturdays (except makeup days) shall be paid at one and one-half times the hourly rate of wage. All hours worked on Sundays and holidays shall be paid at double the hourly rate of wage.

Overtime Codes Continued

1. O. The first ten (10) hours worked on Saturday shall be paid at one and one-half times the hourly rate of wage. All hours worked on Sundays, holidays and after twelve (12) hours, Monday through Friday and after ten (10) hours on Saturday shall be paid at double the hourly rate of wage.

P. All hours worked on Saturdays (except makeup days if circumstances warrant) and Sundays shall be paid at one and one-half times the hourly rate of wage. All hours worked on holidays shall be paid at double the hourly rate of wage.

Q. The first two (2) hours after eight (8) regular hours Monday through Friday and up to ten (10) hours worked on Saturdays shall be paid at one and one-half times the hourly rate of wage. All hours worked in excess of ten (10) hours per day Monday through Saturday and all hours worked on Sundays and holidays (except Christmas day) shall be paid at double the hourly rate of wage. All hours worked on Christmas day shall be paid at two and one-half times the hourly rate of wage.

R. All hours worked on Sundays and holidays shall be paid at two times the hourly rate of wage.

S. The first two (2) hours after eight (8) regular hours Monday through Friday and the first eight (8) hours on Saturday shall be paid at one and one-half times the hourly rate of wage. All hours worked on holidays and all other overtime hours worked, except Labor Day, shall be paid at double the hourly rate of wage. All hours worked on Labor Day shall be paid at three times the hourly rate of wage.

U. All hours worked on Saturdays shall be paid at one and one-half times the hourly rate of wage. All hours worked on Sundays and holidays (except Labor Day) shall be paid at two times the hourly rate of wage. All hours worked on Labor Day shall be paid at three times the hourly rate of wage.

V. All hours worked on Sundays and holidays (except Thanksgiving Day and Christmas day) shall be paid at one and one-half times the hourly rate of wage. All hours worked on Thanksgiving Day and Christmas day shall be paid at double the hourly rate of wage.

W. All hours worked on Saturdays and Sundays (except make-up days due to conditions beyond the control of the employer)) shall be paid at one and one-half times the hourly rate of wage. All hours worked on holidays shall be paid at double the hourly rate of wage.

X. The first four (4) hours after eight (8) regular hours Monday through Friday and the first twelve (12) hours on Saturday shall be paid at one and one-half times the hourly rate of wage. All hours worked over twelve (12) hours Monday through Saturday, Sundays and holidays shall be paid at double the hourly rate of wage. When holiday falls on Saturday or Sunday, the day before Saturday, Friday, and the day after Sunday, Monday, shall be considered the holiday and all work performed shall be paid at double the hourly rate of wage.

Y. All hours worked outside the hours of 5:00 am and 5:00 pm (or such other hours as may be agreed upon by any employer and the employee) and all hours worked in excess of eight (8) hours per day (10 hours per day for a 4 x 10 workweek) and on Saturdays and holidays (except labor day) shall be paid at one and one-half times the hourly rate of wage. (except for employees who are absent from work without prior approval on a scheduled workday during the workweek shall be paid at the straight-time rate until they have worked 8 hours in a day (10 in a 4 x 10 workweek) or 40 hours during that workweek.) All hours worked Monday through Saturday over twelve (12) hours and all hours worked on Sundays and Labor Day shall be paid at double the hourly rate of wage.

Z. All hours worked on Saturdays and Sundays shall be paid at one and one-half times the hourly rate of wage. All hours worked on holidays shall be paid the straight time rate of pay in addition to holiday pay.

Overtime Codes Continued

2. ALL HOURS WORKED IN EXCESS OF EIGHT (8) HOURS PER DAY OR FORTY (40) HOURS PER WEEK SHALL BE PAID AT ONE AND ONE-HALF TIMES THE HOURLY RATE OF WAGE.

   B. All hours worked on holidays shall be paid at one and one-half times the hourly rate of wage.

   C. All hours worked on Sundays shall be paid at one and one-half times the hourly rate of wage. All hours worked on holidays shall be paid at two times the hourly rate of wage.

   F. The first eight (8) hours worked on holidays shall be paid at the straight hourly rate of wage in addition to the holiday pay. All hours worked in excess of eight (8) hours on holidays shall be paid at double the hourly rate of wage.

   G. All hours worked on Sunday shall be paid at two times the hourly rate of wage. All hours worked on paid holidays shall be paid at two and one-half times the hourly rate of wage including holiday pay.

   H. All hours worked on Sunday shall be paid at two times the hourly rate of wage. All hours worked on holidays shall be paid at one and one-half times the hourly rate of wage.

   O. All hours worked on Sundays and holidays shall be paid at one and one-half times the hourly rate of wage.

   R. All hours worked on Sundays and holidays and all hours worked over sixty (60) in one week shall be paid at double the hourly rate of wage.

   U. All hours worked on Saturdays shall be paid at one and one-half times the hourly rate of wage. All hours worked over 12 hours in a day or on Sundays and holidays shall be paid at double the hourly rate of wage.

   W. The first two (2) hours after eight (8) regular hours Monday through Friday and the first eight (8) hours on Saturday shall be paid at one and one-half times the hourly rate of wage. All other hours worked Monday through Saturday, and all hours worked on Sundays and holidays shall be paid at double the hourly rate of wage. On a four-day, ten-hour weekly schedule, either Monday thru Thursday or Tuesday thru Friday schedule, all hours worked after ten shall be paid at double the hourly rate of wage. The first eight (8) hours worked on the fifth day shall be paid at one and one-half times the hourly rate of wage. All other hours worked on the fifth, sixth, and seventh days and on holidays shall be paid at double the hourly rate of wage.

3. ALL HOURS WORKED IN EXCESS OF EIGHT (8) HOURS PER DAY OR FORTY (40) HOURS PER WEEK SHALL BE PAID AT ONE AND ONE-HALF TIMES THE HOURLY RATE OF WAGE.

   A. Work performed in excess of eight (8) hours of straight time per day, or ten (10) hours of straight time per day when four ten (10) hour shifts are established, or forty (40) hours of straight time per week, Monday through Friday, or outside the normal shift, and all work on Saturdays shall be paid at time and one-half the straight time rate. Hours worked over twelve hours (12) in a single shift and all work performed after 6:00 pm Saturday to 6:00 am Monday and holidays shall be paid at double the straight time rate of pay. Any shift starting between the hours of 6:00 pm and midnight shall receive an additional one dollar ($1.00) per hour for all hours worked that shift. The employer shall have the sole discretion to assign overtime work to employees. Primary consideration for overtime work shall be given to employees regularly assigned to the work to be performed on overtime situations. After an employee has worked eight (8) hours at an applicable overtime rate, all additional hours shall be at the applicable overtime rate until such time as the employee has had a break of eight (8) hours or more.

   C. Work performed in excess of eight (8) hours of straight time per day, or ten (10) hours of straight time per day when four ten (10) hour shifts are established, or forty (40) hours of straight time per week, Monday through Friday, or outside the normal shift, and all work on Saturdays shall be paid at one and one-half times the hourly rate of wage. All work performed after 6:00 pm Saturday to 5:00 am Monday and Holidays shall be paid at double the hourly rate of wage. After an employee has worked eight (8) hours at an applicable overtime rate, all additional hours shall be at the applicable overtime rate until such time as the employee has had a break of eight (8) hours or more.

Overtime Codes Continued

3. E. All hours worked Sundays and holidays shall be paid at double the hourly rate of wage. Each week, once 40 hours of straight time work is achieved, then any hours worked over 10 hours per day Monday through Saturday shall be paid at double the hourly wage rate.

F. All hours worked on Saturday shall be paid at one and one-half times the hourly rate of wage. All hours worked on Sunday shall be paid at two times the hourly rate of wage. All hours worked on paid holidays shall be paid at two and one-half times the hourly rate of wage including holiday pay.

H. All work performed on Sundays between March 16th and October 14th and all Holidays shall be compensated for at two (2) times the regular rate of pay. Work performed on Sundays between October 15th and March 15th shall be compensated at one and one half (1-1/2) times the regular rate of pay.

J. All hours worked between the hours of 10:00 pm and 5:00 am, Monday through Friday, and all hours worked on Saturdays shall be paid at a one and one-half times the hourly rate of wage. All hours worked on Sundays and holidays shall be paid at double the hourly rate of wage.

K. Work performed in excess of eight (8) hours of straight time per day, or ten (10) hours of straight time per day when four ten (10) hour shifts are established, or forty (40) hours of straight time per week, Monday through Friday, or outside the normal 5 am to 6pm shift, and all work on Saturdays shall be paid at one and one-half times the hourly rate of wage. All work performed after 6:00 pm Saturday to 5:00 am Monday and Holidays, and all hours worked in excess of twelve (12) hours in a single shift shall be paid at double the hourly rate of wage.

After an employee has worked eight (8) hours at an applicable overtime rate, all additional hours shall be at the applicable overtime rate until such time as the employee has had a break of eight (8) hours or more. When an employee returns to work without at least eight (8) hours time off since their previous shift, all such time shall be a continuation of shift and paid at the applicable overtime rate until he/she shall have the eight (8) hours rest period.

4. ALL HOURS WORKED IN EXCESS OF EIGHT (8) HOURS PER DAY OR FORTY (40) HOURS PER WEEK SHALL BE PAID AT ONE AND ONE-HALF TIMES THE HOURLY RATE OF WAGE.

A. All hours worked in excess of eight (8) hours per day or forty (40) hours per week shall be paid at double the hourly rate of wage. All hours worked on Saturdays, Sundays and holidays shall be paid at double the hourly rate of wage.

B. All hours worked over twelve (12) hours per day and all hours worked on holidays shall be paid at double the hourly rate of wage.

C. On Monday through Friday, the first four (4) hours of overtime after eight (8) hours of straight time work shall be paid at one and one half (1-1/2) times the straight time rate of pay, unless a four (4) day ten (10) hour workweek has been established. On a four (4) day ten (10) hour workweek scheduled Monday through Thursday, or Tuesday through Friday, the first two (2) hours of overtime after ten (10) hours of straight time work shall be paid at one and one half (1-1/2) times the straight time rate of pay. On Saturday, the first twelve (12) hours of work shall be paid at one and one half (1-1/2) times the straight time rate of pay, except that if the job is down on Monday through Friday due to weather conditions or other conditions outside the control of the employer, the first ten (10) hours on Saturday may be worked at the straight time rate of pay. All hours worked over twelve (12) hours in a day and all hours worked on Sunday and Holidays shall be paid at two (2) times the straight time rate of pay.

Overtime Codes Continued

4. D. All hours worked in excess of eight (8) hours per day or forty (40) hours per week shall be paid at double the hourly rate of wage. All hours worked on Saturday, Sundays and holidays shall be paid at double the hourly rate of pay. Rates include all members of the assigned crew.

EXCEPTION:
On all multipole structures and steel transmission lines, switching stations, regulating, capacitor stations, generating plants, industrial plants, associated installations and substations, except those substations whose primary function is to feed a distribution system, will be paid overtime under the following rates:

The first two (2) hours after eight (8) regular hours Monday through Friday of overtime on a regular workday, shall be paid at one and one-half times the hourly rate of wage. All hours in excess of ten (10) hours will be at two (2) times the hourly rate of wage. The first eight (8) hours worked on Saturday will be paid at one and one-half (1-1/2) times the hourly rate of wage. All hours worked in excess of eight (8) hours on Saturday, and all hours worked on Sundays and holidays will be at the double the hourly rate of wage.

All overtime eligible hours performed on the above described work that is energized, shall be paid at the double the hourly rate of wage.

E. The first two (2) hours after eight (8) regular hours Monday through Friday and the first eight (8) hours on Saturday shall be paid at one and one-half times the hourly rate of wage. All other hours worked Monday through Saturday, and all hours worked on Sundays and holidays shall be paid at double the hourly rate of wage.

On a four-day, ten-hour weekly schedule, either Monday thru Thursday or Tuesday thru Friday schedule, all hours worked after ten shall be paid at double the hourly rate of wage. The Monday or Friday not utilized in the normal four-day, ten hour work week, and Saturday shall be paid at one and one half (1½) times the regular shift rate for the first eight (8) hours. All other hours worked Monday through Saturday, and all hours worked on Sundays and holidays shall be paid at double the hourly rate of wage.

F. All hours worked between the hours of 6:00 pm and 6:00 am, Monday through Saturday, shall be paid at a premium rate of 20% over the hourly rate of wage. All hours worked on Sundays shall be paid at one and one-half times the hourly rate of wage. All hours worked on holidays shall be paid at double the hourly rate of wage.

G. All hours worked on Saturdays shall be paid at one and one-half times the hourly rate of wage. All hours worked Monday through Saturday over twelve (12) hours and all hours worked on Sundays and holidays shall be paid at double the hourly rate of wage.

H. The first two (2) hours after eight (8) regular hours Monday through Friday and the first eight (8) hours on Saturday shall be paid at one and one-half times the hourly rate of wage. All other overtime hours worked, except Labor Day, and all hours on Sunday shall be paid at double the hourly rate of wage. All hours worked on Labor Day shall be paid at three times the hourly rate of wage.

I. The First eight (8) hours worked on Saturdays shall be paid at one and one-half times the hourly rate of wage. All hours worked in excess of eight (8) per day on Saturdays shall be paid at double the hourly rate of wage. All hours worked on Sundays and holidays shall be paid at double the hourly rate of wage.

J. The first eight (8) hours worked on a Saturday shall be paid at one and one-half times the hourly rate of wage. All hours worked in excess of eight (8) hours on a Saturday shall be paid at double the hourly rate of wage. All hours worked over twelve (12) in a day, and all hours worked on Sundays and Holidays shall be paid at double the hourly rate of wage.

K. All hours worked on a Saturday shall be paid at one and one-half times the hourly rate of wage, so long as Saturday is the sixth consecutive day worked. All hours worked over twelve (12) in a day Monday through Saturday, and all hours worked on Sundays and Holidays shall be paid at double the hourly rate of wage.

Overtime Codes Continued

4. L. The first twelve (12) hours worked on a Saturday shall be paid at one and one-half times the hourly rate of wage. All hours worked on a Saturday in excess of twelve (12) hours shall be paid at double the hourly rate of pay. All hours worked over twelve (12) in a day Monday through Friday, and all hours worked on Sundays shall be paid at double the hourly rate of wage. All hours worked on a holiday shall be paid at one and one-half times the hourly rate of wage, except that all hours worked on Labor Day shall be paid at double the hourly rate of pay.

M. All hours worked on Sunday and Holidays shall be paid at double the hourly rate. Any employee reporting to work less than nine (9) hours from their previous quitting time shall be paid for such time at time and one-half times the hourly rate.

N. All hours worked on Saturdays shall be paid at one and one-half times the hourly rate of wage. All hours worked on Sundays and holidays, and all work performed between the hours of midnight (12:00 AM) and eight AM (8:00 AM) every day shall be paid at double the hourly rate of wage.

O. All hours worked between midnight Friday to midnight Sunday shall be paid at one and one-half the hourly rate of wage. After an employee has worked in excess of eight (8) continuous hours in any one or more calendar days, all additional hours shall be at the applicable overtime rate until such time as the employee has had a break of six (6) hours or more. All hours worked on Holidays shall be paid at double the hourly rate of wage.

P. All hours worked on Holidays shall be paid at one and one-half times the hourly rate of wage.

Q. The first four (4) hours after eight (8) regular hours Monday through Friday and the first eight (8) hours on Saturday shall be paid at one and one-half times the hourly rate of wage. All hours worked over twelve (12) hours Monday through Saturday shall be paid at double the hourly rate. All hours worked on Sundays and holidays shall be paid at double the hourly rate of wage.

R. All hours worked on Saturdays shall be paid at one and one-half times the hourly rate of wage, so long as Saturday is the sixth consecutive day worked. All hours worked on Sundays and holidays shall be paid at double the hourly rate of wage.

S. All hours worked on Saturdays and Holidays shall be paid at one and one-half times the hourly rate of wage. All hours worked on Sundays shall be paid at double the hourly rate of wage.

T. The first two (2) hours of overtime for hours worked Monday-Friday shall be paid at one and one-half times the hourly rate of wage. All hours worked in excess of ten (10) hours per day shall be paid at double the hourly rate of wage. All hours worked on Sundays and holidays shall be paid at double the hourly rate of wage. For work on Saturday which is scheduled prior to the end of shift on Friday, the first six (6) hours work shall be paid at one and one-half times the hourly rate of wage, and all hours over (6) shall be paid double the hourly rate of wage. For work on Saturday which was assigned following the close of shift on Friday, all work shall be paid at double the hourly rate of wage.

U. The first four (4) hours after eight (8) regular hours Monday through Friday and the first twelve (12) hours on Saturday shall be paid at one and one-half times the hourly rate of wage. (Except on makeup days if work is lost due to inclement weather, then the first eight (8) hours on Saturday may be paid the regular rate.) All hours worked over twelve (12) hours Monday through Saturday, and all hours worked on Sundays and holidays shall be paid at double the hourly rate of wage.

Overtime Codes Continued

4. V. Work performed in excess of ten (10) hours of straight time per day when four ten (10) hour shifts are established or outside the normal shift (5 am to 6pm), and all work on Saturdays, except for make-up days shall be paid at time and one-half (1 ½) the straight time rate.

In the event the job is down due to weather conditions, then Saturday may, be worked as a voluntary make-up day at the straight time rate. However, Saturday shall not be utilized as a make-up day when a holiday falls on Friday. All work performed on Sundays and holidays and work in excess of twelve (12) hours per day shall be paid at double (2x) the straight time rate of pay.

After an employee has worked eight (8) hours at an applicable overtime rate, all additional hours shall be at the applicable overtime rate until such time as the employee has had a break of eight (8) hours.

When an employee returns to work without a break of eight (8) hours since their previous shift, all such time shall be a continuation of shift and paid at the applicable overtime rate until such time as the employee has had a break of eight (8) hours.

W. All hours worked on Saturdays (except makeup days if work is lost due to inclement weather conditions) shall be paid at one and one-half times the hourly rate of wage. All hours worked on Sundays and holidays shall be paid at double the hourly rate of wage.

When an employee returns to work without at least eight (8) hours time off since their previous shift, all such time shall be a continuation of shift and paid at the applicable overtime rate until such time as the employee has had a break of eight (8) hours.

X. All hours worked on Saturdays shall be paid at one and one-half times the hourly rate of wage. All hours worked on Sundays and holidays shall be paid at double the hourly rate of wage. Work performed outside the normal shift of 6 am to 6pm shall be paid at one and one-half the straight time rate, (except for special shifts or three shift operations). All work performed on Sundays and holidays shall be paid at double the hourly rate of wage. Shifts may be established when considered necessary by the Employer.

The Employer may establish shifts consisting of eight (8) or ten (10) hours of work (subject to WAC 296-127-022), that shall constitute a normal forty (40) hour work week. The Employer can change from a 5-eight to a 4-ten hour schedule or back to the other. All hours of work on these shifts shall be paid for at the straight time hourly rate. Work performed in excess of eight hours (or ten hours per day (subject to WAC 296-127-022) shall be paid at one and one-half the straight time rate.

When due to conditions beyond the control of the Employer, or when contract specifications require that work can only be performed outside the regular day shift, then by mutual agreement a special shift may be worked at the straight time rate, eight (8) hours work for eight (8) hours pay. The starting time shall be arranged to fit such conditions of work.

When an employee returns to work without at a break of eight (8) hours since their previous shift, all such time shall be a continuation of shift and paid at the applicable overtime rate until such time as the employee has had a break of eight (8) hours.

Overtime Codes Continued

4. Y. Work performed in excess of eight (8) hours of straight time per day, or ten (10) hours of straight time per day when four ten (10) hour shifts are established, or forty (40) hours of straight time per week, Monday through Friday, or outside the normal shift, and all work on Saturdays shall be paid at time and one-half the straight time rate. All work performed after 6:00 pm Saturday to 6:00 am Monday and holidays shall be paid at double the straight time rate of pay.

   Any shift starting between the hours of 6:00 pm and midnight shall receive an additional one dollar ($1.00) per hour for all hours worked that shift.

   After an employee has worked eight (8) hours at an applicable overtime rate, all additional hours shall be at the applicable overtime rate until such time as the employee has had a break of eight (8) hours or more.

Holiday Codes

5. A. Holidays: New Year's Day, Memorial Day, Independence Day, Labor Day, Thanksgiving Day, Friday after Thanksgiving Day, and Christmas Day (7).

   B. Holidays: New Year's Day, Memorial Day, Independence Day, Labor Day, Thanksgiving Day, Friday after Thanksgiving Day, the day before Christmas, and Christmas Day (8).

   C. Holidays: New Year's Day, Presidents' Day, Memorial Day, Independence Day, Labor Day, Thanksgiving Day, the Friday after Thanksgiving Day, And Christmas Day (8).

   D. Holidays: New Year's Day, Memorial Day, Independence Day, Labor Day, Thanksgiving Day, the Friday and Saturday after Thanksgiving Day, And Christmas Day (8).

   H. Holidays: New Year's Day, Memorial Day, Independence Day, Thanksgiving Day, the Day after Thanksgiving Day, And Christmas (6).

   I. Holidays: New Year's Day, Memorial Day, Independence Day, Labor Day, Thanksgiving Day, and Christmas Day (6).

   J. Holidays: New Year's Day, Memorial Day, Independence Day, Thanksgiving Day, Friday after Thanksgiving Day, Christmas Eve Day, And Christmas Day (7).

   K. Holidays: New Year's Day, Presidents' Day, Memorial Day, Independence Day, Labor Day, Thanksgiving Day, Friday After Thanksgiving Day, The Day Before Christmas, And Christmas Day (9).

   L. Holidays: New Year's Day, Martin Luther King Jr. Day, Memorial Day, Independence Day, Labor Day, Thanksgiving Day, Friday after Thanksgiving Day, And Christmas Day (8).

   N. Holidays: New Year's Day, Presidents' Day, Memorial Day, Independence Day, Labor Day, Veterans' Day, Thanksgiving Day, The Friday After Thanksgiving Day, And Christmas Day (9).

   P. Holidays: New Year's Day, Memorial Day, Independence Day, Labor Day, Thanksgiving Day, Friday And Saturday After Thanksgiving Day, The Day Before Christmas, And Christmas Day (9). If A Holiday Falls On Sunday, The Following Monday Shall Be Considered As A Holiday.

   Q. Paid Holidays: New Year's Day, Memorial Day, Independence Day, Labor Day, Thanksgiving Day, and Christmas Day (6).

Holiday Codes Continued

5. R. Paid Holidays: New Year's Day, Memorial Day, Independence Day, Labor Day, Thanksgiving Day, Day After Thanksgiving Day, One-Half Day Before Christmas Day, And Christmas Day. (7 1/2).

S. Paid Holidays: New Year's Day, Presidents' Day, Memorial Day, Independence Day, Labor Day, Thanksgiving Day, And Christmas Day (7).

T. Paid Holidays: New Year's Day, Washington's Birthday, Memorial Day, Independence Day, Labor Day, Thanksgiving Day, The Friday After Thanksgiving Day, Christmas Day, And The Day Before Or After Christmas (9).

Z. Holidays: New Year's Day, Memorial Day, Independence Day, Labor Day, Veterans Day, Thanksgiving Day, the Friday after Thanksgiving Day, And Christmas Day (8).

6. A. Paid Holidays: New Year's Day, Presidents' Day, Memorial Day, Independence Day, Labor Day, Thanksgiving Day, the Friday after Thanksgiving Day, And Christmas Day (8).

E. Paid Holidays: New Year's Day, Day Before Or After New Year's Day, Presidents Day, Memorial Day, Independence Day, Labor Day, Thanksgiving Day, the Friday after Thanksgiving Day, Christmas Day, and a Half-Day On Christmas Eve Day. (9 1/2).

G. Paid Holidays: New Year's Day, Martin Luther King Jr. Day, Presidents' Day, Memorial Day, Independence Day, Labor Day, Veterans' Day, Thanksgiving Day, the Friday after Thanksgiving Day, Christmas Day, and Christmas Eve Day (11).

H. Paid Holidays: New Year's Day, New Year's Eve Day, Memorial Day, Independence Day, Labor Day, Thanksgiving Day, Friday After Thanksgiving Day, Christmas Day, The Day After Christmas, And A Floating Holiday (10).

I. Paid Holidays: New Year's Day, Memorial Day, Independence Day, Labor Day, Thanksgiving Day, Friday After Thanksgiving Day, And Christmas Day (7).

T. Paid Holidays: New Year's Day, Presidents' Day, Memorial Day, Independence Day, Labor Day, Thanksgiving Day, The Friday After Thanksgiving Day, The Last Working Day Before Christmas Day, And Christmas Day (9).

Z. Holidays: New Year's Day, Memorial Day, Independence Day, Labor Day, Thanksgiving Day, Friday after Thanksgiving Day, And Christmas Day (7). If a holiday falls on Saturday, the preceding Friday shall be considered as the holiday. If a holiday falls on Sunday, the following Monday shall be considered as the holiday.

7. A. Holidays: New Year's Day, Memorial Day, Independence Day, Labor Day, Thanksgiving Day, the Friday and Saturday after Thanksgiving Day, And Christmas Day (8). Any Holiday Which Falls On A Sunday Shall Be Observed As A Holiday On The Following Monday. If any of the listed holidays falls on a Saturday, the preceding Friday shall be a regular work day.

B. Holidays: New Year's Day, Memorial Day, Independence Day, Labor Day, Thanksgiving Day, the Friday and Saturday after Thanksgiving Day, And Christmas Day (8). Any holiday which falls on a Sunday shall be observed as a holiday on the following Monday. Any holiday which falls on a Saturday shall be observed as a holiday on the preceding Friday.

C. Holidays: New Year's Day, Martin Luther King Jr. Day, Memorial Day, Independence Day, Labor Day, Thanksgiving Day, the Friday after Thanksgiving Day, And Christmas Day (8). Any holiday which falls on a Sunday shall be observed as a holiday on the following Monday. Any holiday which falls on a Saturday shall be observed as a holiday on the preceding Friday.

Holiday Codes Continued

7. D. Paid Holidays: New Year's Day, Memorial Day, Independence Day, Labor Day, Veteran's Day, Thanksgiving Day, the Friday after Thanksgiving Day, And Christmas Day (8). Unpaid Holidays: President's Day. Any paid holiday which falls on a Sunday shall be observed as a holiday on the following Monday. Any paid holiday which falls on a Saturday shall be observed as a holiday on the preceding Friday.

E. Holidays: New Year's Day, Memorial Day, Independence Day, Labor Day, Thanksgiving Day, the Friday after Thanksgiving Day, And Christmas Day (7). Any holiday which falls on a Sunday shall be observed as a holiday on the following Monday. Any holiday which falls on a Saturday shall be observed as a holiday on the preceding Friday.

F. Holidays: New Year's Day, Memorial Day, Independence Day, Labor Day, Thanksgiving Day, the Friday after Thanksgiving Day, the last working day before Christmas day and Christmas day (8). Any holiday which falls on a Sunday shall be observed as a holiday on the following Monday. Any holiday which falls on a Saturday shall be observed as a holiday on the preceding Friday.

G. Holidays: New Year's Day, Memorial Day, Independence Day, Labor Day, Thanksgiving Day, and Christmas Day (6). Any holiday which falls on a Sunday shall be observed as a holiday on the following Monday.

H. Holidays: New Year's Day, Martin Luther King Jr. Day, Independence Day, Memorial Day, Labor Day, Thanksgiving Day, the Friday after Thanksgiving Day, the Last Working Day before Christmas Day and Christmas Day (9). Any holiday which falls on a Sunday shall be observed as a holiday on the following Monday. Any holiday which falls on a Saturday shall be observed as a holiday on the preceding Friday.

I. Holidays: New Year's Day, President's Day, Independence Day, Memorial Day, Labor Day, Thanksgiving Day, The Friday After Thanksgiving Day, The Day Before Christmas Day And Christmas Day (9). Any holiday which falls on a Sunday shall be observed as a holiday on the following Monday. Any holiday which falls on a Saturday shall be observed as a holiday on the preceding Friday.

J. Holidays: New Year's Day, Independence Day, Memorial Day, Labor Day, Thanksgiving Day and Christmas Day (6). Any holiday which falls on a Sunday shall be observed as a holiday on the following Monday. Any holiday which falls on a Saturday shall be observed as a holiday on the preceding Friday.

K. Holidays: New Year's Day, Memorial Day, Independence Day, Thanksgiving Day, the Friday and Saturday after Thanksgiving Day, And Christmas Day (8). Any holiday which falls on a Sunday shall be observed as a holiday on the following Monday. Any holiday which falls on a Saturday shall be observed as a holiday on the preceding Friday.

L. Holidays: New Year's Day, Memorial Day, Labor Day, Independence Day, Thanksgiving Day, the Last Work Day before Christmas Day, And Christmas Day (7). Any holiday which falls on a Sunday shall be observed as a holiday on the following Monday. Any holiday which falls on a Saturday shall be observed as a holiday on the preceding Friday.

M. Paid Holidays: New Year's Day, The Day after or before New Year's Day, President's Day, Memorial Day, Independence Day, Labor Day, Thanksgiving Day, the Friday after Thanksgiving Day, Christmas Day, And the Day after or before Christmas Day (10). Any holiday which falls on a Sunday shall be observed as a holiday on the following Monday. Any holiday which falls on a Saturday shall be observed as a holiday on the preceding Friday.

N. Holidays: New Year's Day, Memorial Day, Independence Day, Labor Day, Thanksgiving Day, the Friday after Thanksgiving Day, And Christmas Day (7). Any holiday which falls on a Sunday shall be observed as a holiday on the following Monday. When Christmas falls on a Saturday, the preceding Friday shall be observed as a holiday.

P. Holidays: New Year's Day, Memorial Day, Independence Day, Labor Day, Thanksgiving Day, Friday after Thanksgiving Day, And Christmas Day (7). Any holiday which falls on a Sunday shall be observed as a holiday on the following Monday.

Holiday Codes Continued

7. Q. Holidays: New Year's Day, Memorial Day, Independence Day, Labor Day, Thanksgiving Day, the Friday after Thanksgiving Day, the Last Working Day before Christmas Day and Christmas Day (8). Any holiday which falls on a Sunday shall be observed as a holiday on the following Monday. If any of the listed holidays falls on a Saturday, the preceding Friday shall be a regular work day.

R. Paid Holidays: New Year's Day, the day after or before New Year's Day, President's Day, Memorial Day, Independence Day, Labor Day, Thanksgiving Day, the Friday after Thanksgiving Day, Christmas Day, and the day after or before Christmas Day (10). If any of the listed holidays fall on Saturday, the preceding Friday shall be observed as the holiday. If any of the listed holidays falls on a Sunday, the day observed by the Nation shall be considered a holiday and compensated accordingly.

S. Paid Holidays: New Year's Day, Memorial Day, Independence Day, Labor Day, Thanksgiving Day, Friday after Thanksgiving Day, Christmas Day, the Day after Christmas, and A Floating Holiday (9). If any of the listed holidays falls on a Sunday, the day observed by the Nation shall be considered a holiday and compensated accordingly.

T. Paid Holidays: New Year's Day, the Day after or before New Year's Day, President's Day, Memorial Day, Independence Day, Labor Day, Thanksgiving Day, the Friday after Thanksgiving Day, Christmas Day, and The Day after or before Christmas Day. (10). If any of the listed holidays falls on a Sunday, the day observed by the Nation shall be considered a holiday and compensated accordingly. Any holiday which falls on a Saturday shall be observed as a holiday on the preceding Friday.

V. Holidays: New Year's Day, President's Birthday, Memorial Day, Independence Day, Labor Day, Thanksgiving Day, the Friday after Thanksgiving Day, Christmas Day, the day before or after Christmas, and the day before or after New Year's Day. If any of the above listed holidays falls on a Sunday, the day observed by the Nation shall be considered a holiday and compensated accordingly.

W. Holidays: New Year's Day, Day After New Year's, Memorial Day, Independence Day, Labor Day, Thanksgiving Day, the Friday after Thanksgiving Day, Christmas Eve Day, Christmas Day, the day after Christmas, the day before New Year's Day, and a Floating Holiday.

X. Holidays: New Year's Day, Day before or after New Year's Day, Presidents' Day, Memorial Day, Independence Day, Labor Day, Thanksgiving Day, the Friday after Thanksgiving Day, Christmas Day, and the day before or after Christmas day. If a holiday falls on a Saturday or on a Friday that is the normal day off, then the holiday will be taken on the last normal workday. If the holiday falls on a Monday that is the normal day off or on a Sunday, then the holiday will be taken on the next normal workday.

Y. Holidays: New Year's Day, Presidents' Day, Memorial Day, Independence Day, Labor Day, Thanksgiving Day, the Friday after Thanksgiving Day, and Christmas Day. (8) If the holiday falls on a Sunday, then the day observed by the federal government shall be considered a holiday and compensated accordingly.

Z. Holidays: New Year's Day, President's Day, Independence Day, Memorial Day, Labor Day, Thanksgiving Day, The Friday After Thanksgiving Day, And Christmas Day (8). Any holiday which falls on a Sunday shall be observed as a holiday on the following Monday. Any holiday which falls on a Saturday shall be observed as a holiday on the preceding Friday.

15. A. Holidays: New Year's Day, Memorial Day, Independence Day, Labor Day, Thanksgiving Day, the Friday after Thanksgiving Day, the day before Christmas Day and Christmas Day. (8) Any holiday which falls on a Sunday shall be observed as a holiday on the following Monday.

B. Holidays: New Year's Day, Martin Luther King Jr. Day, President's Day, Memorial Day, Independence Day, Labor Day, Veteran's Day, Thanksgiving Day, and Christmas Day. (9)

C. Holidays: New Year's Day, Memorial Day, Independence Day, Labor Day, Thanksgiving Day, the Friday after Thanksgiving Day, the day before Christmas Day and Christmas Day. (8)

Holiday Codes Continued

15. D. Holidays: New Year's Day, Presidents' Day, Memorial Day, Independence Day, Labor Day, Thanksgiving Day, Friday after Thanksgiving Day, Christmas Day, and the day after Christmas.

E. Holidays: the day before New Years's Day, New Year's Day, Martin Luther King, Jr. Day, Presidents' Day, Memorial Day, Independence Day, Labor Day, Veteran's Day, Thanksgiving Day, Friday after Thanksgiving Day, the day before Christmas, and Christmas Day. (12)

Note Codes

8. D. Workers working with supplied air on hazmat projects receive an additional $1.00 per hour.

L. Workers on hazmat projects receive additional hourly premiums as follows -Level A: $0.75, Level B: $0.50, And Level C: $0.25.

M. Workers on hazmat projects receive additional hourly premiums as follows: Levels A & B: $1.00, Levels C & D: $0.50.

N. Workers on hazmat projects receive additional hourly premiums as follows -Level A: $1.00, Level B: $0.75, Level C: $0.50, And Level D: $0.25.

P. Workers on hazmat projects receive additional hourly premiums as follows -Class A Suit: $2.00, Class B Suit: $1.50, Class C Suit: $1.00, And Class D Suit $0.50.

Q. The highest pressure registered on the gauge for an accumulated time of more than fifteen (15) minutes during the shift shall be used in determining the scale paid.

S. Effective August 31, 2012 – A Traffic Control Supervisor shall be present on the project whenever flagging or spotting or other traffic control labor is being utilized. Flaggers and Spotters shall be posted where shown on approved Traffic Control Plans or where directed by the Engineer. All flaggers and spotters shall possess a current flagging card issued by the State of Washington, Oregon, Montana, or Idaho. This classification is only effective on or after August 31, 2012.

T. Effective August 31, 2012 – A Traffic Control Laborer performs the setup, maintenance and removal of all temporary traffic control devices and construction signs necessary to control vehicular, bicycle, and pedestrian traffic during construction operations. Flaggers and Spotters shall be posted where shown on approved Traffic Control Plans or where directed by the Engineer. All flaggers and spotters shall possess a current flagging card issued by the State of Washington, Oregon, Montana, or Idaho. This classification is only effective on or after August 31, 2012.

U. Workers on hazmat projects receive additional hourly premiums as follows – Class A Suit: $2.00, Class B Suit: $1.50, And Class C Suit: $1.00. Workers performing underground work receive an additional $0.40 per hour for any and all work performed underground, including operating, servicing and repairing of equipment. The premium for underground work shall be paid for the entire shift worked. Workers who work suspended by a rope or cable receive an additional $0.50 per hour. The premium for work suspended shall be paid for the entire shift worked. Workers who do "pioneer" work (break open a cut, build road, etc.) more than one hundred fifty (150) feet above grade elevation receive an additional $0.50 per hour.

Note Codes Continued

8. V. In addition to the hourly wage and fringe benefits, the following depth and enclosure premiums shall be paid. The premiums are to be calculated for the maximum depth and distance into an enclosure that a diver reaches in a day. The premiums are to be paid one time for the day and are not used in calculating overtime pay.

Depth premiums apply to depths of fifty feet or more. Over 50' to 100' - $2.00 per foot for each foot over 50 feet. Over 101' to 150' - $3.00 per foot for each foot over 101 feet. Over 151' to 220' - $4.00 per foot for each foot over 220 feet. Over 221' - $5.00 per foot for each foot over 221 feet.

Enclosure premiums apply when divers enter enclosures (such as pipes or tunnels) where there is no vertical ascent and is measured by the distance travelled from the entrance. 25’ to 300’ - $1.00 per foot from entrance. 300’ to 600’ - $1.50 per foot beginning at 300’. Over 600’ - $2.00 per foot beginning at 600’.

W. Meter Installers work on single phase 120/240V self-contained residential meters. The Lineman/Groundmen rates would apply to meters not fitting this description.

X. Workers on hazmat projects receive additional hourly premiums as follows - Class A Suit: $2.00, Class B Suit: $1.50, Class C Suit: $1.00, and Class D Suit: $0.50. Special Shift Premium: Basic hourly rate plus $2.00 per hour.

When due to conditions beyond the control of the Employer or when an owner (not acting as the contractor), a government agency or the contract specifications requires that work can only be performed outside the normal 5 am to 6pm shift, then the special shift premium will be applied to the basic hourly rate. When an employee works on a special shift, they shall be paid a special shift premium for each hour worked unless they are in OT or Double-time status. (For example, the special shift premium does not waive the overtime requirements for work performed on Saturday or Sunday.)

Y. Tide Work: When employees are called out between the hours of 6:00 p.m. and 6:00 a.m. to work on tide work (work located in the tide plane) all time worked shall be at one and one-half times the hourly rate of pay.

Swinging Stage/Boatswains Chair: Employees working on a swinging state or boatswains chair or under conditions that require them to be tied off to allow their hands to be free shall receive seventy-five cents ($0.75) per hour above the classification rate.

Z. Workers working with supplied air on hazmat projects receive an additional $1.00 per hour.

Special Shift Premium: Basic hourly rate plus $2.00 per hour. When due to conditions beyond the control of the Employer or when an owner (not acting as a contractor), a government agency or the contract specifications require that more than (4) hours of a special shift can only be performed outside the normal 6 am to 6pm shift, then the special shift premium will be applied to the basic straight time for the entire shift. When an employee works on a special shift, they will be paid a special shift premium for each hour worked unless they are in overtime or double-time status. (For example, the special shift premium does not waive the overtime requirements for work performed on Saturday or Sunday.)

Note Codes Continued

9. A. Workers working with supplied air on hazmat projects receive an additional $1.00 per hour.

Special Shift Premium: Basic hourly rate plus $2.00 per hour. When due to conditions beyond the control of the Employer or when an owner (not acting as the contractor), a government agency or the contract specifications require that more than four (4) hours of a special shift can only be performed outside the normal 6 am to 6pm shift, then the special shift premium will be applied to the basic straight time for the entire shift. When an employee works on a special shift, they shall be paid a special shift premium for each hour worked unless they are in overtime or double-time status. (For example, the special shift premium does not waive the overtime requirements for work performed on Saturday or Sunday.)

Certified Crane Operator Premium: Crane operators requiring certifications shall be paid $0.50 per hour above their classification rate.

Boom Pay Premium: All cranes including tower shall be paid as follows based on boom length:

(A) – 130’ to 199’ – $0.50 per hour over their classification rate.
(B) – 200’ to 299’ – $0.80 per hour over their classification rate.
(C) – 300’ and over – $1.00 per hour over their classification rate.

B. The highest pressure registered on the gauge for an accumulated time of more than fifteen (15) minutes during the shift shall be used in determining the scale paid.

Tide Work: When employees are called out between the hours of 6:00 p.m. and 6:00 a.m. to work on tide work (work located in the tide plane) all time worked shall be at one and one-half times the hourly rate of pay. Swinging Stage/Boatswains Chair: Employees working on a swinging stage or boatswains chair or under conditions that require them to be tied off to allow their hands to be free shall receive seventy-five cents ($0.75) per hour above the classification rate.

C. Tide Work: When employees are called out between the hours of 6:00 p.m. and 6:00 a.m. to work on tide work (work located in the tide plane) all time worked shall be at one and one-half times the hourly rate of pay. Swinging Stage/Boatswains Chair: Employees working on a swinging stage or boatswains chair or under conditions that require them to be tied off to allow their hands to be free shall receive seventy-five cents ($0.75) per hour above the classification rate.

Effective August 31, 2012 – A Traffic Control Supervisor shall be present on the project whenever flagging or spotting or other traffic control labor is being utilized. A Traffic Control Laborer performs the setup, maintenance and removal of all temporary traffic control devices and construction signs necessary to control vehicular, bicycle, and pedestrian traffic during construction operations. Flaggers and Spotters shall be posted where shown on approved Traffic Control Plans or where directed by the Engineer. All flaggers and spotters shall possess a current flagging card issued by the State of Washington, Oregon, Montana, or Idaho. These classifications are only effective on or after August 31, 2012.

D. Industrial Painter wages are required for painting within industrial facilities such as treatment plants, pipelines, towers, dams, bridges, power generation facilities and manufacturing facilities such as chemical plants, etc., or anywhere abrasive blasting is necessary to prepare surfaces, or hazardous materials encapsulation is required.

E. Heavy Construction includes construction, repair, alteration or additions to the production, fabrication or manufacturing portions of industrial or manufacturing plants, hydroelectric or nuclear power plants and atomic reactor construction. Workers on hazmat projects receive additional hourly premiums as follows -Level A: $1.00, Level B: $0.75, Level C: $0.50, And Level D: $0.25.

State of Washington
Department of Labor & Industries

Prevailing Wage Section - Telephone 360-902-5335
PO Box 44540, Olympia, WA 98504-4540

Washington State Prevailing Wage

The PREVAILING WAGES listed here include both the hourly wage rate and the hourly rate of fringe benefits. On public works projects, worker's wage and benefit rates must add to not less than this total. A brief description of overtime calculation requirements are provided on the Benefit Code Key.

Journey Level Prevailing Wage Rates for the Effective Date: 3/12/2020

County	Trade	Job Classification	Wage	Holiday	Overtime	Note	*Risk Class
King	Asbestos Abatement Workers	Journey Level	$50.86	5D	1H		View
King	Boilermakers	Journey Level	$69.29	5N	1C		View
King	Brick Mason	Journey Level	$58.82	5A	1M		View
King	Brick Mason	Pointer-Caulker-Cleaner	$58.82	5A	1M		View
King	Building Service Employees	Janitor	$25.58	5S	2F		View
King	Building Service Employees	Traveling Waxer/Shampooer	$26.03	5S	2F		View
King	Building Service Employees	Window Cleaner (Non-Scaffold)	$29.33	5S	2F		View
King	Building Service Employees	Window Cleaner (Scaffold)	$30.33	5S	2F		View
King	Cabinet Makers (In Shop)	Journey Level	$22.74		1		View
King	Carpenters	Acoustical Worker	$62.44	7A	4C		View
King	Carpenters	Carpenter	$62.44	7A	4C		View
King	Carpenters	Carpenters on Stationary Tools	$62.57	7A	4C		View
King	Carpenters	Creosoted Material	$62.54	7A	4C		View
King	Carpenters	Floor Finisher	$62.44	7A	4C		View
King	Carpenters	Floor Layer	$62.44	7A	4C		View
King	Carpenters	Scaffold Erector	$62.44	7A	4C		View
King	Cement Masons	Application of all Composition Mastic	$62.97	7A	4U		View
King	Cement Masons	Application of all Epoxy Material	$62.47	7A	4U		View
King	Cement Masons	Application of all Plastic Material	$62.97	7A	4U		View
King	Cement Masons	Application of Sealing Compound	$62.47	7A	4U		View
King	Cement Masons	Application of Underlayment	$62.97	7A	4U		View
King	Cement Masons	Building General	$62.47	7A	4U		View
King	Cement Masons	Composition or Kalman Floors	$62.97	7A	4U		View
King	Cement Masons	Concrete Paving	$62.47	7A	4U		View
King	Cement Masons	Curb & Gutter Machine	$62.97	7A	4U		View
King	Cement Masons	Curb & Gutter, Sidewalks	$62.47	7A	4U		View
King	Cement Masons	Curing Concrete	$62.47	7A	4U		View

King	Cement Masons	Finish Colored Concrete	$62.97	7A	4U		View
King	Cement Masons	Floor Grinding	$62.97	7A	4U		View
King	Cement Masons	Floor Grinding/Polisher	$62.47	7A	4U		View
King	Cement Masons	Green Concrete Saw, self-powered	$62.97	7A	4U		View
King	Cement Masons	Grouting of all Plates	$62.47	7A	4U		View
King	Cement Masons	Grouting of all Tilt-up Panels	$62.47	7A	4U		View
King	Cement Masons	Gunite Nozzleman	$62.97	7A	4U		View
King	Cement Masons	Hand Powered Grinder	$62.97	7A	4U		View
King	Cement Masons	Journey Level	$62.47	7A	4U		View
King	Cement Masons	Patching Concrete	$62.47	7A	4U		View
King	Cement Masons	Pneumatic Power Tools	$62.97	7A	4U		View
King	Cement Masons	Power Chipping & Brushing	$62.97	7A	4U		View
King	Cement Masons	Sand Blasting Architectural Finish	$62.97	7A	4U		View
King	Cement Masons	Screed & Rodding Machine	$62.97	7A	4U		View
King	Cement Masons	Spackling or Skim Coat Concrete	$62.47	7A	4U		View
King	Cement Masons	Troweling Machine Operator	$62.97	7A	4U		View
King	Cement Masons	Troweling Machine Operator on Colored Slabs	$62.97	7A	4U		View
King	Cement Masons	Tunnel Workers	$62.97	7A	4U		View
King	Divers & Tenders	Bell/Vehicle or Submersible Operator (Not Under Pressure)	$116.20	7A	4C		View
King	Divers & Tenders	Dive Supervisor/Master	$79.23	7A	4C		View
King	Divers & Tenders	Diver	$116.20	7A	4C	8V	View
King	Divers & Tenders	Diver On Standby	$74.23	7A	4C		View
King	Divers & Tenders	Diver Tender	$67.31	7A	4C		View
King	Divers & Tenders	Manifold Operator	$67.31	7A	4C		View
King	Divers & Tenders	Manifold Operator Mixed Gas	$72.31	7A	4C		View
King	Divers & Tenders	Remote Operated Vehicle Operator/Technician	$67.31	7A	4C		View
King	Divers & Tenders	Remote Operated Vehicle Tender	$62.69	7A	4C		View
King	Dredge Workers	Assistant Engineer	$56.44	5D	3F		View
King	Dredge Workers	Assistant Mate (Deckhand)	$56.00	5D	3F		View
King	Dredge Workers	Boatmen	$56.44	5D	3F		View
King	Dredge Workers	Engineer Welder	$57.51	5D	3F		View
King	Dredge Workers	Leverman, Hydraulic	$58.67	5D	3F		View
King	Dredge Workers	Mates	$56.44	5D	3F		View
King	Dredge Workers	Oiler	$56.00	5D	3F		View
King	Drywall Applicator	Journey Level	$62.44	5D	1H		View
King	Drywall Tapers	Journey Level	$62.81	5P	1E		View
King	Electrical Fixture Maintenance Workers	Journey Level	$31.99	5L	1E		View
King	Electricians - Inside	Cable Splicer	$87.22	7C	4E		View
King	Electricians - Inside	Cable Splicer (tunnel)	$93.74	7C	4E		View
King	Electricians - Inside	Certified Welder	$84.26	7C	4E		View

King	Electricians - Inside	Certified Welder (tunnel)	$90.47	7C	4E		View
King	Electricians - Inside	Construction Stock Person	$43.18	7C	4E		View
King	Electricians - Inside	Journey Level	$81.30	7C	4E		View
King	Electricians - Inside	Journey Level (tunnel)	$87.22	7C	4E		View
King	Electricians - Motor Shop	Journey Level	$47.53	5A	1B		View
King	Electricians - Powerline Construction	Cable Splicer	$82.39	5A	4D		View
King	Electricians - Powerline Construction	Certified Line Welder	$75.64	5A	4D		View
King	Electricians - Powerline Construction	Groundperson	$49.17	5A	4D		View
King	Electricians - Powerline Construction	Heavy Line Equipment Operator	$75.64	5A	4D		View
King	Electricians - Powerline Construction	Journey Level Lineperson	$75.64	5A	4D		View
King	Electricians - Powerline Construction	Line Equipment Operator	$64.54	5A	4D		View
King	Electricians - Powerline Construction	Meter Installer	$49.17	5A	4D	8W	View
King	Electricians - Powerline Construction	Pole Sprayer	$75.64	5A	4D		View
King	Electricians - Powerline Construction	Powderperson	$56.49	5A	4D		View
King	Electronic Technicians	Journey Level	$53.57	7E	1E		View
King	Elevator Constructors	Mechanic	$97.31	7D	4A		View
King	Elevator Constructors	Mechanic In Charge	$105.06	7D	4A		View
King	Fabricated Precast Concrete Products	All Classifications - In-Factory Work Only	$18.25	5B	1R		View
King	Fence Erectors	Fence Erector	$43.11	7A	4V	8Y	View
King	Fence Erectors	Fence Laborer	$43.11	7A	4V	8Y	View
King	Flaggers	Journey Level	$43.11	7A	4V	8Y	View
King	Glaziers	Journey Level	$66.51	7L	1Y		View
King	Heat & Frost Insulators And Asbestos Workers	Journeyman	$76.61	5J	4H		View
King	Heating Equipment Mechanics	Journey Level	$85.88	7F	1E		View
King	Hod Carriers & Mason Tenders	Journey Level	$52.44	7A	4V	8Y	View
King	Industrial Power Vacuum Cleaner	Journey Level	$13.50		1		View
King	Inland Boatmen	Boat Operator	$61.41	5B	1K		View
King	Inland Boatmen	Cook	$56.48	5B	1K		View
King	Inland Boatmen	Deckhand	$57.48	5B	1K		View
King	Inland Boatmen	Deckhand Engineer	$58.81	5B	1K		View
King	Inland Boatmen	Launch Operator	$58.89	5B	1K		View
King	Inland Boatmen	Mate	$57.31	5B	1K		View
King	Inspection/Cleaning/Sealing Of Sewer & Water Systems By Remote Control	Cleaner Operator, Foamer Operator	$31.49		1		View
King	Inspection/Cleaning/Sealing Of Sewer & Water Systems By Remote Control	Grout Truck Operator	$13.50		1		View

King	Inspection/Cleaning/Sealing Of Sewer & Water Systems By Remote Control	Head Operator	$24.91		1		View
King	Inspection/Cleaning/Sealing Of Sewer & Water Systems By Remote Control	Technician	$19.33		1		View
King	Inspection/Cleaning/Sealing Of Sewer & Water Systems By Remote Control	Tv Truck Operator	$20.45		1		View
King	Insulation Applicators	Journey Level	$62.44	7A	4C		View
King	Ironworkers	Journeyman	$73.73	7N	1O		View
King	Laborers	Air, Gas Or Electric Vibrating Screed	$50.86	7A	4V	8Y	View
King	Laborers	Airtrac Drill Operator	$52.44	7A	4V	8Y	View
King	Laborers	Ballast Regular Machine	$50.86	7A	4V	8Y	View
King	Laborers	Batch Weighman	$43.11	7A	4V	8Y	View
King	Laborers	Brick Pavers	$50.86	7A	4V	8Y	View
King	Laborers	Brush Cutter	$50.86	7A	4V	8Y	View
King	Laborers	Brush Hog Feeder	$50.86	7A	4V	8Y	View
King	Laborers	Burner	$50.86	7A	4V	8Y	View
King	Laborers	Caisson Worker	$52.44	7A	4V	8Y	View
King	Laborers	Carpenter Tender	$50.86	7A	4V	8Y	View
King	Laborers	Cement Dumper-paving	$51.80	7A	4V	8Y	View
King	Laborers	Cement Finisher Tender	$50.86	7A	4V	8Y	View
King	Laborers	Change House Or Dry Shack	$50.86	7A	4V	8Y	View
King	Laborers	Chipping Gun (30 Lbs. And Over)	$51.80	7A	4V	8Y	View
King	Laborers	Chipping Gun (Under 30 Lbs.)	$50.86	7A	4V	8Y	View
King	Laborers	Choker Setter	$50.86	7A	4V	8Y	View
King	Laborers	Chuck Tender	$50.86	7A	4V	8Y	View
King	Laborers	Clary Power Spreader	$51.80	7A	4V	8Y	View
King	Laborers	Clean-up Laborer	$50.86	7A	4V	8Y	View
King	Laborers	Concrete Dumper/Chute Operator	$51.80	7A	4V	8Y	View
King	Laborers	Concrete Form Stripper	$50.86	7A	4V	8Y	View
King	Laborers	Concrete Placement Crew	$51.80	7A	4V	8Y	View
King	Laborers	Concrete Saw Operator/Core Driller	$51.80	7A	4V	8Y	View
King	Laborers	Crusher Feeder	$43.11	7A	4V	8Y	View
King	Laborers	Curing Laborer	$50.86	7A	4V	8Y	View
King	Laborers	Demolition: Wrecking & Moving (Incl. Charred Material)	$50.86	7A	4V	8Y	View
King	Laborers	Ditch Digger	$50.86	7A	4V	8Y	View
King	Laborers	Diver	$52.44	7A	4V	8Y	View
King	Laborers	Drill Operator (Hydraulic, Diamond)	$51.80	7A	4V	8Y	View
King	Laborers	Dry Stack Walls	$50.86	7A	4V	8Y	View
King	Laborers	Dump Person	$50.86	7A	4V	8Y	View
King	Laborers	Epoxy Technician	$50.86	7A	4V	8Y	View

King	Laborers	Erosion Control Worker	$50.86	7A	4V	8Y	View
King	Laborers	Faller & Bucker Chain Saw	$51.80	7A	4V	8Y	View
King	Laborers	Fine Graders	$50.86	7A	4V	8Y	View
King	Laborers	Firewatch	$43.11	7A	4V	8Y	View
King	Laborers	Form Setter	$50.86	7A	4V	8Y	View
King	Laborers	Gabian Basket Builders	$50.86	7A	4V	8Y	View
King	Laborers	General Laborer	$50.86	7A	4V	8Y	View
King	Laborers	Grade Checker & Transit Person	$52.44	7A	4V	8Y	View
King	Laborers	Grinders	$50.86	7A	4V	8Y	View
King	Laborers	Grout Machine Tender	$50.86	7A	4V	8Y	View
King	Laborers	Groutmen (Pressure) Including Post Tension Beams	$51.80	7A	4V	8Y	View
King	Laborers	Guardrail Erector	$50.86	7A	4V	8Y	View
King	Laborers	Hazardous Waste Worker (Level A)	$52.44	7A	4V	8Y	View
King	Laborers	Hazardous Waste Worker (Level B)	$51.80	7A	4V	8Y	View
King	Laborers	Hazardous Waste Worker (Level C)	$50.86	7A	4V	8Y	View
King	Laborers	High Scaler	$52.44	7A	4V	8Y	View
King	Laborers	Jackhammer	$51.80	7A	4V	8Y	View
King	Laborers	Laserbeam Operator	$51.80	7A	4V	8Y	View
King	Laborers	Maintenance Person	$50.86	7A	4V	8Y	View
King	Laborers	Manhole Builder-Mudman	$51.80	7A	4V	8Y	View
King	Laborers	Material Yard Person	$50.86	7A	4V	8Y	View
King	Laborers	Motorman-Dinky Locomotive	$51.80	7A	4V	8Y	View
King	Laborers	Nozzleman (Concrete Pump, Green Cutter When Using Combination Of High Pressure Air & Water On Concrete & Rock, Sandblast, Gunite, Shotcrete, Water Blaster, Vacuum Blaster)	$51.80	7A	4V	8Y	View
King	Laborers	Pavement Breaker	$51.80	7A	4V	8Y	View
King	Laborers	Pilot Car	$43.11	7A	4V	8Y	View
King	Laborers	Pipe Layer Lead	$52.44	7A	4V	8Y	View
King	Laborers	Pipe Layer/Tailor	$51.80	7A	4V	8Y	View
King	Laborers	Pipe Pot Tender	$51.80	7A	4V	8Y	View
King	Laborers	Pipe Reliner	$51.80	7A	4V	8Y	View
King	Laborers	Pipe Wrapper	$51.80	7A	4V	8Y	View
King	Laborers	Pot Tender	$50.86	7A	4V	8Y	View
King	Laborers	Powderman	$52.44	7A	4V	8Y	View
King	Laborers	Powderman's Helper	$50.86	7A	4V	8Y	View
King	Laborers	Power Jacks	$51.80	7A	4V	8Y	View
King	Laborers	Railroad Spike Puller - Power	$51.80	7A	4V	8Y	View
King	Laborers	Raker - Asphalt	$52.44	7A	4V	8Y	View
King	Laborers	Re-timberman	$52.44	7A	4V	8Y	View
King	Laborers	Remote Equipment Operator	$51.80	7A	4V	8Y	View
King	Laborers	Rigger/Signal Person	$51.80	7A	4V	8Y	View

King	Laborers	Rip Rap Person	$50.86	7A	4V	8Y	View
King	Laborers	Rivet Buster	$51.80	7A	4V	8Y	View
King	Laborers	Rodder	$51.80	7A	4V	8Y	View
King	Laborers	Scaffold Erector	$50.86	7A	4V	8Y	View
King	Laborers	Scale Person	$50.86	7A	4V	8Y	View
King	Laborers	Sloper (Over 20")	$51.80	7A	4V	8Y	View
King	Laborers	Sloper Sprayer	$50.86	7A	4V	8Y	View
King	Laborers	Spreader (Concrete)	$51.80	7A	4V	8Y	View
King	Laborers	Stake Hopper	$50.86	7A	4V	8Y	View
King	Laborers	Stock Piler	$50.86	7A	4V	8Y	View
King	Laborers	Swinging Stage/Boatswain Chair	$43.11	7A	4V	8Y	View
King	Laborers	Tamper & Similar Electric, Air & Gas Operated Tools	$51.80	7A	4V	8Y	View
King	Laborers	Tamper (Multiple & Self-propelled)	$51.80	7A	4V	8Y	View
King	Laborers	Timber Person - Sewer (Lagger, Shorer & Cribber)	$51.80	7A	4V	8Y	View
King	Laborers	Toolroom Person (at Jobsite)	$50.86	7A	4V	8Y	View
King	Laborers	Topper	$50.86	7A	4V	8Y	View
King	Laborers	Track Laborer	$50.86	7A	4V	8Y	View
King	Laborers	Track Liner (Power)	$51.80	7A	4V	8Y	View
King	Laborers	Traffic Control Laborer	$46.10	7A	4V	9C	View
King	Laborers	Traffic Control Supervisor	$46.10	7A	4V	9C	View
King	Laborers	Truck Spotter	$50.86	7A	4V	8Y	View
King	Laborers	Tugger Operator	$51.80	7A	4V	8Y	View
King	Laborers	Tunnel Work-Compressed Air Worker 0-30 psi	$120.61	7A	4V	9B	View
King	Laborers	Tunnel Work-Compressed Air Worker 30.01-44.00 psi	$125.64	7A	4V	9B	View
King	Laborers	Tunnel Work-Compressed Air Worker 44.01-54.00 psi	$129.32	7A	4V	9B	View
King	Laborers	Tunnel Work-Compressed Air Worker 54.01-60.00 psi	$135.02	7A	4V	9B	View
King	Laborers	Tunnel Work-Compressed Air Worker 60.01-64.00 psi	$137.14	7A	4V	9B	View
King	Laborers	Tunnel Work-Compressed Air Worker 64.01-68.00 psi	$142.24	7A	4V	9B	View
King	Laborers	Tunnel Work-Compressed Air Worker 68.01-70.00 psi	$144.14	7A	4V	9B	View
King	Laborers	Tunnel Work-Compressed Air Worker 70.01-72.00 psi	$146.14	7A	4V	9B	View
King	Laborers	Tunnel Work-Compressed Air Worker 72.01-74.00 psi	$148.14	7A	4V	9B	View
King	Laborers	Tunnel Work-Guage and Lock Tender	$52.54	7A	4V	8Y	View
King	Laborers	Tunnel Work-Miner	$52.54	7A	4V	8Y	View
King	Laborers	Vibrator	$51.80	7A	4V	8Y	View
King	Laborers	Vinyl Seamer	$50.86	7A	4V	8Y	View
King	Laborers	Watchman	$39.18	7A	4V	8Y	View

King	Laborers	Welder	$51.80	7A	4V	8Y	View
King	Laborers	Well Point Laborer	$51.80	7A	4V	8Y	View
King	Laborers	Window Washer/Cleaner	$39.18	7A	4V	8Y	View
King	Laborers - Underground Sewer & Water	General Laborer & Topman	$50.86	7A	4V	8Y	View
King	Laborers - Underground Sewer & Water	Pipe Layer	$51.80	7A	4V	8Y	View
King	Landscape Construction	Landscape Construction/Landscaping Or Planting Laborers	$39.18	7A	4V	8Y	View
King	Landscape Construction	Landscape Operator	$68.02	7A	3K	8X	View
King	Landscape Maintenance	Groundskeeper	$17.87		1		View
King	Lathers	Journey Level	$62.44	5D	1H		View
King	Marble Setters	Journey Level	$58.82	5A	1M		View
King	Metal Fabrication (In Shop)	Fitter	$15.86		1		View
King	Metal Fabrication (In Shop)	Laborer	$13.50		1		View
King	Metal Fabrication (In Shop)	Machine Operator	$13.50		1		View
King	Metal Fabrication (In Shop)	Painter	$13.50		1		View
King	Metal Fabrication (In Shop)	Welder	$15.48		1		View
King	Millwright	Journey Level	$63.94	7A	4C		View
King	Modular Buildings	Cabinet Assembly	$13.50		1		View
King	Modular Buildings	Electrician	$13.50		1		View
King	Modular Buildings	Equipment Maintenance	$13.50		1		View
King	Modular Buildings	Plumber	$13.50		1		View
King	Modular Buildings	Production Worker	$13.50		1		View
King	Modular Buildings	Tool Maintenance	$13.50		1		View
King	Modular Buildings	Utility Person	$13.50		1		View
King	Modular Buildings	Welder	$13.50		1		View
King	Painters	Journey Level	$43.40	6Z	2B		View
King	Pile Driver	Crew Tender	$67.31	7A	4C		View
King	Pile Driver	Crew Tender/Technician	$67.31	7A	4C		View
King	Pile Driver	Hyperbaric Worker - Compressed Air Worker 0-30.00 PSI	$77.93	7A	4C		View
King	Pile Driver	Hyperbaric Worker - Compressed Air Worker 30.01 - 44.00 PSI	$82.93	7A	4C		View
King	Pile Driver	Hyperbaric Worker - Compressed Air Worker 44.01 - 54.00 PSI	$86.93	7A	4C		View
King	Pile Driver	Hyperbaric Worker - Compressed Air Worker 54.01 - 60.00 PSI	$91.93	7A	4C		View
King	Pile Driver	Hyperbaric Worker - Compressed Air Worker 60.01 - 64.00 PSI	$94.43	7A	4C		View
King	Pile Driver	Hyperbaric Worker - Compressed Air Worker 64.01 - 68.00 PSI	$99.43	7A	4C		View
King	Pile Driver	Hyperbaric Worker -	$101.43	7A	4C		View

		Compressed Air Worker 68.01 - 70.00 PSI					
King	Pile Driver	Hyperbaric Worker - Compressed Air Worker 70.01 - 72.00 PSI	$103.43	7A	4C		View
King	Pile Driver	Hyperbaric Worker - Compressed Air Worker 72.01 - 74.00 PSI	$105.43	7A	4C		View
King	Pile Driver	Journey Level	$62.69	7A	4C		View
King	Plasterers	Journey Level	$59.42	7Q	1R		View
King	Playground & Park Equipment Installers	Journey Level	$13.50		1		View
King	Plumbers & Pipefitters	Journey Level	$89.19	6Z	1G		View
King	Power Equipment Operators	Asphalt Plant Operators	$69.16	7A	3K	8X	View
King	Power Equipment Operators	Assistant Engineer	$65.05	7A	3K	8X	View
King	Power Equipment Operators	Barrier Machine (zipper)	$68.55	7A	3K	8X	View
King	Power Equipment Operators	Batch Plant Operator: concrete	$68.55	7A	3K	8X	View
King	Power Equipment Operators	Bobcat	$65.05	7A	3K	8X	View
King	Power Equipment Operators	Brokk - Remote Demolition Equipment	$65.05	7A	3K	8X	View
King	Power Equipment Operators	Brooms	$65.05	7A	3K	8X	View
King	Power Equipment Operators	Bump Cutter	$68.55	7A	3K	8X	View
King	Power Equipment Operators	Cableways	$69.16	7A	3K	8X	View
King	Power Equipment Operators	Chipper	$68.55	7A	3K	8X	View
King	Power Equipment Operators	Compressor	$65.05	7A	3K	8X	View
King	Power Equipment Operators	Concrete Finish Machine - Laser Screed	$65.05	7A	3K	8X	View
King	Power Equipment Operators	Concrete Pump - Mounted Or Trailer High Pressure Line Pump, Pump High Pressure	$68.02	7A	3K	8X	View
King	Power Equipment Operators	Concrete Pump: Truck Mount With Boom Attachment Over 42 M	$69.16	7A	3K	8X	View
King	Power Equipment Operators	Concrete Pump: Truck Mount With Boom Attachment Up To 42m	$68.55	7A	3K	8X	View
King	Power Equipment Operators	Conveyors	$68.02	7A	3K	8X	View
King	Power Equipment Operators	Cranes friction: 200 tons and over	$71.26	7A	3K	8X	View
King	Power Equipment Operators	Cranes: 100 tons through 199 tons, or 150' of boom (including jib with attachments)	$69.85	7A	3K	8X	View
King	Power Equipment Operators	Cranes: 20 Tons Through 44 Tons With Attachments	$68.55	7A	3K	8X	View
King	Power Equipment Operators	Cranes: 200 tons- 299 tons, or 250' of boom including jib with attachments	$70.57	7A	3K	8X	View
King	Power Equipment Operators	Cranes: 300 tons and over or 300' of boom including jib with attachments	$71.26	7A	3K	8X	View
King	Power Equipment Operators	Cranes: 45 Tons Through 99	$69.16	7A	3K	8X	View

		Tons, Under 150' Of Boom (including Jib With Attachments)					
King	Power Equipment Operators	Cranes: A-frame - 10 Tons And Under	$65.05	7A	3K	8X	View
King	Power Equipment Operators	Cranes: Friction cranes through 199 tons	$70.57	7A	3K	8X	View
King	Power Equipment Operators	Cranes: through 19 tons with attachments, A-frame over 10 tons	$68.02	7A	3K	8X	View
King	Power Equipment Operators	Crusher	$68.55	7A	3K	8X	View
King	Power Equipment Operators	Deck Engineer/Deck Winches (power)	$68.55	7A	3K	8X	View
King	Power Equipment Operators	Derricks, On Building Work	$69.16	7A	3K	8X	View
King	Power Equipment Operators	Dozers D-9 & Under	$68.02	7A	3K	8X	View
King	Power Equipment Operators	Drill Oilers: Auger Type, Truck Or Crane Mount	$68.02	7A	3K	8X	View
King	Power Equipment Operators	Drilling Machine	$69.85	7A	3K	8X	View
King	Power Equipment Operators	Elevator And Man-lift: Permanent And Shaft Type	$65.05	7A	3K	8X	View
King	Power Equipment Operators	Finishing Machine, Bidwell And Gamaco & Similar Equipment	$68.55	7A	3K	8X	View
King	Power Equipment Operators	Forklift: 3000 Lbs And Over With Attachments	$68.02	7A	3K	8X	View
King	Power Equipment Operators	Forklifts: Under 3000 Lbs. With Attachments	$65.05	7A	3K	8X	View
King	Power Equipment Operators	Grade Engineer: Using Blue Prints, Cut Sheets, Etc	$68.55	7A	3K	8X	View
King	Power Equipment Operators	Gradechecker/Stakeman	$65.05	7A	3K	8X	View
King	Power Equipment Operators	Guardrail Punch	$68.55	7A	3K	8X	View
King	Power Equipment Operators	Hard Tail End Dump Articulating Off- Road Equipment 45 Yards. & Over	$69.16	7A	3K	8X	View
King	Power Equipment Operators	Hard Tail End Dump Articulating Off-road Equipment Under 45 Yards	$68.55	7A	3K	8X	View
King	Power Equipment Operators	Horizontal/Directional Drill Locator	$68.02	7A	3K	8X	View
King	Power Equipment Operators	Horizontal/Directional Drill Operator	$68.55	7A	3K	8X	View
King	Power Equipment Operators	Hydralifts/Boom Trucks Over 10 Tons	$68.02	7A	3K	8X	View
King	Power Equipment Operators	Hydralifts/Boom Trucks, 10 Tons And Under	$65.05	7A	3K	8X	View
King	Power Equipment Operators	Loader, Overhead 8 Yards. & Over	$69.85	7A	3K	8X	View
King	Power Equipment Operators	Loader, Overhead, 6 Yards. But Not Including 8 Yards	$69.16	7A	3K	8X	View
King	Power Equipment Operators	Loaders, Overhead Under 6 Yards	$68.55	7A	3K	8X	View
King	Power Equipment Operators	Loaders, Plant Feed	$68.55	7A	3K	8X	View
King	Power Equipment Operators	Loaders: Elevating Type Belt	$68.02	7A	3K	8X	View

King	Power Equipment Operators	Locomotives, All	$68.55	7A	3K	8X	View
King	Power Equipment Operators	Material Transfer Device	$68.55	7A	3K	8X	View
King	Power Equipment Operators	Mechanics, All (leadmen - $0.50 Per Hour Over Mechanic)	$69.85	7A	3K	8X	View
King	Power Equipment Operators	Motor Patrol Graders	$69.16	7A	3K	8X	View
King	Power Equipment Operators	Mucking Machine, Mole, Tunnel Drill, Boring, Road Header And/or Shield	$69.16	7A	3K	8X	View
King	Power Equipment Operators	Oil Distributors, Blower Distribution & Mulch Seeding Operator	$65.05	7A	3K	8X	View
King	Power Equipment Operators	Outside Hoists (Elevators And Manlifts), Air Tuggers, Strato	$68.02	7A	3K	8X	View
King	Power Equipment Operators	Overhead, Bridge Type Crane: 20 Tons Through 44 Tons	$68.55	7A	3K	8X	View
King	Power Equipment Operators	Overhead, Bridge Type: 100 Tons And Over	$69.85	7A	3K	8X	View
King	Power Equipment Operators	Overhead, Bridge Type: 45 Tons Through 99 Tons	$69.16	7A	3K	8X	View
King	Power Equipment Operators	Pavement Breaker	$65.05	7A	3K	8X	View
King	Power Equipment Operators	Pile Driver (other Than Crane Mount)	$68.55	7A	3K	8X	View
King	Power Equipment Operators	Plant Oiler - Asphalt, Crusher	$68.02	7A	3K	8X	View
King	Power Equipment Operators	Posthole Digger, Mechanical	$65.05	7A	3K	8X	View
King	Power Equipment Operators	Power Plant	$65.05	7A	3K	8X	View
King	Power Equipment Operators	Pumps - Water	$65.05	7A	3K	8X	View
King	Power Equipment Operators	Quad 9, Hd 41, D10 And Over	$69.16	7A	3K	8X	View
King	Power Equipment Operators	Quick Tower - No Cab, Under 100 Feet In Height Based To Boom	$65.05	7A	3K	8X	View
King	Power Equipment Operators	Remote Control Operator On Rubber Tired Earth Moving Equipment	$69.16	7A	3K	8X	View
King	Power Equipment Operators	Rigger and Bellman	$65.05	7A	3K	8X	View
King	Power Equipment Operators	Rigger/Signal Person, Bellman (Certified)	$68.02	7A	3K	8X	View
King	Power Equipment Operators	Rollagon	$69.16	7A	3K	8X	View
King	Power Equipment Operators	Roller, Other Than Plant Mix	$65.05	7A	3K	8X	View
King	Power Equipment Operators	Roller, Plant Mix Or Multi-lift Materials	$68.02	7A	3K	8X	View
King	Power Equipment Operators	Roto-mill, Roto-grinder	$68.55	7A	3K	8X	View
King	Power Equipment Operators	Saws - Concrete	$68.02	7A	3K	8X	View
King	Power Equipment Operators	Scraper, Self Propelled Under 45 Yards	$68.55	7A	3K	8X	View
King	Power Equipment Operators	Scrapers - Concrete & Carry All	$68.02	7A	3K	8X	View
King	Power Equipment Operators	Scrapers, Self-propelled: 45 Yards And Over	$69.16	7A	3K	8X	View
King	Power Equipment Operators	Service Engineers - Equipment	$68.02	7A	3K	8X	View
King	Power Equipment Operators	Shotcrete/Gunite Equipment	$65.05	7A	3K	8X	View
King	Power Equipment Operators	Shovel, Excavator, Backhoe, Tractors Under 15 Metric Tons	$68.02	7A	3K	8X	View

King	Power Equipment Operators	Shovel, Excavator, Backhoe: Over 30 Metric Tons To 50 Metric Tons	$69.16	7A	3K	8X	View
King	Power Equipment Operators	Shovel, Excavator, Backhoes, Tractors: 15 To 30 Metric Tons	$68.55	7A	3K	8X	View
King	Power Equipment Operators	Shovel, Excavator, Backhoes: Over 50 Metric Tons To 90 Metric Tons	$69.85	7A	3K	8X	View
King	Power Equipment Operators	Shovel, Excavator, Backhoes: Over 90 Metric Tons	$70.57	7A	3K	8X	View
King	Power Equipment Operators	Slipform Pavers	$69.16	7A	3K	8X	View
King	Power Equipment Operators	Spreader, Topsider & Screedman	$69.16	7A	3K	8X	View
King	Power Equipment Operators	Subgrader Trimmer	$68.55	7A	3K	8X	View
King	Power Equipment Operators	Tower Bucket Elevators	$68.02	7A	3K	8X	View
King	Power Equipment Operators	Tower Crane Up To 175' In Height Base To Boom	$69.85	7A	3K	8X	View
King	Power Equipment Operators	Tower Crane: over 175’ through 250’ in height, base to boom	$70.57	7A	3K	8X	View
King	Power Equipment Operators	Tower Cranes: over 250' in height from base to boom	$71.26	7A	3K	8X	View
King	Power Equipment Operators	Transporters, All Track Or Truck Type	$69.16	7A	3K	8X	View
King	Power Equipment Operators	Trenching Machines	$68.02	7A	3K	8X	View
King	Power Equipment Operators	Truck Crane Oiler/driver - 100 Tons And Over	$68.55	7A	3K	8X	View
King	Power Equipment Operators	Truck Crane Oiler/Driver Under 100 Tons	$68.02	7A	3K	8X	View
King	Power Equipment Operators	Truck Mount Portable Conveyor	$68.55	7A	3K	8X	View
King	Power Equipment Operators	Welder	$69.16	7A	3K	8X	View
King	Power Equipment Operators	Wheel Tractors, Farmall Type	$65.05	7A	3K	8X	View
King	Power Equipment Operators	Yo Yo Pay Dozer	$68.55	7A	3K	8X	View
King	Power Equipment Operators-Underground Sewer & Water	Asphalt Plant Operators	$69.16	7A	3K	8X	View
King	Power Equipment Operators-Underground Sewer & Water	Assistant Engineer	$65.05	7A	3K	8X	View
King	Power Equipment Operators-Underground Sewer & Water	Barrier Machine (zipper)	$68.55	7A	3K	8X	View
King	Power Equipment Operators-Underground Sewer & Water	Batch Plant Operator, Concrete	$68.55	7A	3K	8X	View
King	Power Equipment Operators-Underground Sewer & Water	Bobcat	$65.05	7A	3K	8X	View
King	Power Equipment Operators-Underground Sewer & Water	Brokk - Remote Demolition Equipment	$65.05	7A	3K	8X	View
King	Power Equipment Operators-Underground Sewer & Water	Brooms	$65.05	7A	3K	8X	View
King	Power Equipment Operators-Underground Sewer & Water	Bump Cutter	$68.55	7A	3K	8X	View
King	Power Equipment Operators-Underground Sewer & Water	Cableways	$69.16	7A	3K	8X	View
King	Power Equipment Operators-	Chipper	$68.55	7A	3K	8X	View

	Underground Sewer & Water						
King	Power Equipment Operators-Underground Sewer & Water	Compressor	$65.05	7A	3K	8X	View
King	Power Equipment Operators-Underground Sewer & Water	Concrete Finish Machine - Laser Screed	$65.05	7A	3K	8X	View
King	Power Equipment Operators-Underground Sewer & Water	Concrete Pump - Mounted Or Trailer High Pressure Line Pump, Pump High Pressure	$68.02	7A	3K	8X	View
King	Power Equipment Operators-Underground Sewer & Water	Concrete Pump: Truck Mount With Boom Attachment Over 42 M	$69.16	7A	3K	8X	View
King	Power Equipment Operators-Underground Sewer & Water	Concrete Pump: Truck Mount With Boom Attachment Up To 42m	$68.55	7A	3K	8X	View
King	Power Equipment Operators-Underground Sewer & Water	Conveyors	$68.02	7A	3K	8X	View
King	Power Equipment Operators-Underground Sewer & Water	Cranes friction: 200 tons and over	$71.26	7A	3K	8X	View
King	Power Equipment Operators-Underground Sewer & Water	Cranes: 100 tons through 199 tons, or 150' of boom (including jib with attachments)	$69.85	7A	3K	8X	View
King	Power Equipment Operators-Underground Sewer & Water	Cranes: 20 Tons Through 44 Tons With Attachments	$68.55	7A	3K	8X	View
King	Power Equipment Operators-Underground Sewer & Water	Cranes: 200 tons- 299 tons, or 250' of boom including jib with attachments	$70.57	7A	3K	8X	View
King	Power Equipment Operators-Underground Sewer & Water	Cranes: 300 tons and over or 300' of boom including jib with attachments	$71.26	7A	3K	8X	View
King	Power Equipment Operators-Underground Sewer & Water	Cranes: 45 Tons Through 99 Tons, Under 150' Of Boom (including Jib With Attachments)	$69.16	7A	3K	8X	View
King	Power Equipment Operators-Underground Sewer & Water	Cranes: A-frame - 10 Tons And Under	$65.05	7A	3K	8X	View
King	Power Equipment Operators-Underground Sewer & Water	Cranes: Friction cranes through 199 tons	$70.57	7A	3K	8X	View
King	Power Equipment Operators-Underground Sewer & Water	Cranes: through 19 tons with attachments, A-frame over 10 tons	$68.02	7A	3K	8X	View
King	Power Equipment Operators-Underground Sewer & Water	Crusher	$68.55	7A	3K	8X	View
King	Power Equipment Operators-Underground Sewer & Water	Deck Engineer/Deck Winches (power)	$68.55	7A	3K	8X	View
King	Power Equipment Operators-Underground Sewer & Water	Derricks, On Building Work	$69.16	7A	3K	8X	View
King	Power Equipment Operators-Underground Sewer & Water	Dozers D-9 & Under	$68.02	7A	3K	8X	View
King	Power Equipment Operators-Underground Sewer & Water	Drill Oilers: Auger Type, Truck Or Crane Mount	$68.02	7A	3K	8X	View
King	Power Equipment Operators-Underground Sewer & Water	Drilling Machine	$69.85	7A	3K	8X	View
King	Power Equipment Operators-	Elevator And Man-lift:	$65.05	7A	3K	8X	View

	Underground Sewer & Water	Permanent And Shaft Type					
King	Power Equipment Operators-Underground Sewer & Water	Finishing Machine, Bidwell And Gamaco & Similar Equipment	$68.55	7A	3K	8X	View
King	Power Equipment Operators-Underground Sewer & Water	Forklift: 3000 Lbs And Over With Attachments	$68.02	7A	3K	8X	View
King	Power Equipment Operators-Underground Sewer & Water	Forklifts: Under 3000 Lbs. With Attachments	$65.05	7A	3K	8X	View
King	Power Equipment Operators-Underground Sewer & Water	Grade Engineer: Using Blue Prints, Cut Sheets, Etc	$68.55	7A	3K	8X	View
King	Power Equipment Operators-Underground Sewer & Water	Gradechecker/Stakeman	$65.05	7A	3K	8X	View
King	Power Equipment Operators-Underground Sewer & Water	Guardrail Punch	$68.55	7A	3K	8X	View
King	Power Equipment Operators-Underground Sewer & Water	Hard Tail End Dump Articulating Off- Road Equipment 45 Yards. & Over	$69.16	7A	3K	8X	View
King	Power Equipment Operators-Underground Sewer & Water	Hard Tail End Dump Articulating Off-road Equipment Under 45 Yards	$68.55	7A	3K	8X	View
King	Power Equipment Operators-Underground Sewer & Water	Horizontal/Directional Drill Locator	$68.02	7A	3K	8X	View
King	Power Equipment Operators-Underground Sewer & Water	Horizontal/Directional Drill Operator	$68.55	7A	3K	8X	View
King	Power Equipment Operators-Underground Sewer & Water	Hydralifts/Boom Trucks Over 10 Tons	$68.02	7A	3K	8X	View
King	Power Equipment Operators-Underground Sewer & Water	Hydralifts/Boom Trucks, 10 Tons And Under	$65.05	7A	3K	8X	View
King	Power Equipment Operators-Underground Sewer & Water	Loader, Overhead 8 Yards. & Over	$69.85	7A	3K	8X	View
King	Power Equipment Operators-Underground Sewer & Water	Loader, Overhead, 6 Yards. But Not Including 8 Yards	$69.16	7A	3K	8X	View
King	Power Equipment Operators-Underground Sewer & Water	Loaders, Overhead Under 6 Yards	$68.55	7A	3K	8X	View
King	Power Equipment Operators-Underground Sewer & Water	Loaders, Plant Feed	$68.55	7A	3K	8X	View
King	Power Equipment Operators-Underground Sewer & Water	Loaders: Elevating Type Belt	$68.02	7A	3K	8X	View
King	Power Equipment Operators-Underground Sewer & Water	Locomotives, All	$68.55	7A	3K	8X	View
King	Power Equipment Operators-Underground Sewer & Water	Material Transfer Device	$68.55	7A	3K	8X	View
King	Power Equipment Operators-Underground Sewer & Water	Mechanics, All (leadmen - $0.50 Per Hour Over Mechanic)	$69.85	7A	3K	8X	View
King	Power Equipment Operators-Underground Sewer & Water	Motor Patrol Graders	$69.16	7A	3K	8X	View
King	Power Equipment Operators-Underground Sewer & Water	Mucking Machine, Mole, Tunnel Drill, Boring, Road Header And/or Shield	$69.16	7A	3K	8X	View
King	Power Equipment Operators-Underground Sewer & Water	Oil Distributors, Blower Distribution & Mulch Seeding Operator	$65.05	7A	3K	8X	View
King	Power Equipment Operators-Underground Sewer & Water	Outside Hoists (Elevators And Manlifts), Air Tuggers, Strato	$68.02	7A	3K	8X	View

King	Power Equipment Operators-Underground Sewer & Water	Overhead, Bridge Type Crane: 20 Tons Through 44 Tons	$68.55	7A	3K	8X	View
King	Power Equipment Operators-Underground Sewer & Water	Overhead, Bridge Type: 100 Tons And Over	$69.85	7A	3K	8X	View
King	Power Equipment Operators-Underground Sewer & Water	Overhead, Bridge Type: 45 Tons Through 99 Tons	$69.16	7A	3K	8X	View
King	Power Equipment Operators-Underground Sewer & Water	Pavement Breaker	$65.05	7A	3K	8X	View
King	Power Equipment Operators-Underground Sewer & Water	Pile Driver (other Than Crane Mount)	$68.55	7A	3K	8X	View
King	Power Equipment Operators-Underground Sewer & Water	Plant Oiler - Asphalt, Crusher	$68.02	7A	3K	8X	View
King	Power Equipment Operators-Underground Sewer & Water	Posthole Digger, Mechanical	$65.05	7A	3K	8X	View
King	Power Equipment Operators-Underground Sewer & Water	Power Plant	$65.05	7A	3K	8X	View
King	Power Equipment Operators-Underground Sewer & Water	Pumps - Water	$65.05	7A	3K	8X	View
King	Power Equipment Operators-Underground Sewer & Water	Quad 9, Hd 41, D10 And Over	$69.16	7A	3K	8X	View
King	Power Equipment Operators-Underground Sewer & Water	Quick Tower - No Cab, Under 100 Feet In Height Based To Boom	$65.05	7A	3K	8X	View
King	Power Equipment Operators-Underground Sewer & Water	Remote Control Operator On Rubber Tired Earth Moving Equipment	$69.16	7A	3K	8X	View
King	Power Equipment Operators-Underground Sewer & Water	Rigger and Bellman	$65.05	7A	3K	8X	View
King	Power Equipment Operators-Underground Sewer & Water	Rigger/Signal Person, Bellman (Certified)	$68.02	7A	3K	8X	View
King	Power Equipment Operators-Underground Sewer & Water	Rollagon	$69.16	7A	3K	8X	View
King	Power Equipment Operators-Underground Sewer & Water	Roller, Other Than Plant Mix	$65.05	7A	3K	8X	View
King	Power Equipment Operators-Underground Sewer & Water	Roller, Plant Mix Or Multi-lift Materials	$68.02	7A	3K	8X	View
King	Power Equipment Operators-Underground Sewer & Water	Roto-mill, Roto-grinder	$68.55	7A	3K	8X	View
King	Power Equipment Operators-Underground Sewer & Water	Saws - Concrete	$68.02	7A	3K	8X	View
King	Power Equipment Operators-Underground Sewer & Water	Scraper, Self Propelled Under 45 Yards	$68.55	7A	3K	8X	View
King	Power Equipment Operators-Underground Sewer & Water	Scrapers - Concrete & Carry All	$68.02	7A	3K	8X	View
King	Power Equipment Operators-Underground Sewer & Water	Scrapers, Self-propelled: 45 Yards And Over	$69.16	7A	3K	8X	View
King	Power Equipment Operators-Underground Sewer & Water	Service Engineers - Equipment	$68.02	7A	3K	8X	View
King	Power Equipment Operators-Underground Sewer & Water	Shotcrete/Gunite Equipment	$65.05	7A	3K	8X	View
King	Power Equipment Operators-Underground Sewer & Water	Shovel, Excavator, Backhoe, Tractors Under 15 Metric Tons	$68.02	7A	3K	8X	View
King	Power Equipment Operators-	Shovel, Excavator, Backhoe:	$69.16	7A	3K	8X	View

	Underground Sewer & Water	Over 30 Metric Tons To 50 Metric Tons					
King	Power Equipment Operators-Underground Sewer & Water	Shovel, Excavator, Backhoes, Tractors: 15 To 30 Metric Tons	$68.55	7A	3K	8X	View
King	Power Equipment Operators-Underground Sewer & Water	Shovel, Excavator, Backhoes: Over 50 Metric Tons To 90 Metric Tons	$69.85	7A	3K	8X	View
King	Power Equipment Operators-Underground Sewer & Water	Shovel, Excavator, Backhoes: Over 90 Metric Tons	$70.57	7A	3K	8X	View
King	Power Equipment Operators-Underground Sewer & Water	Slipform Pavers	$69.16	7A	3K	8X	View
King	Power Equipment Operators-Underground Sewer & Water	Spreader, Topsider & Screedman	$69.16	7A	3K	8X	View
King	Power Equipment Operators-Underground Sewer & Water	Subgrader Trimmer	$68.55	7A	3K	8X	View
King	Power Equipment Operators-Underground Sewer & Water	Tower Bucket Elevators	$68.02	7A	3K	8X	View
King	Power Equipment Operators-Underground Sewer & Water	Tower Crane Up To 175' In Height Base To Boom	$69.85	7A	3K	8X	View
King	Power Equipment Operators-Underground Sewer & Water	Tower Crane: over 175’ through 250’ in height, base to boom	$70.57	7A	3K	8X	View
King	Power Equipment Operators-Underground Sewer & Water	Tower Cranes: over 250' in height from base to boom	$71.26	7A	3K	8X	View
King	Power Equipment Operators-Underground Sewer & Water	Transporters, All Track Or Truck Type	$69.16	7A	3K	8X	View
King	Power Equipment Operators-Underground Sewer & Water	Trenching Machines	$68.02	7A	3K	8X	View
King	Power Equipment Operators-Underground Sewer & Water	Truck Crane Oiler/driver - 100 Tons And Over	$68.55	7A	3K	8X	View
King	Power Equipment Operators-Underground Sewer & Water	Truck Crane Oiler/Driver Under 100 Tons	$68.02	7A	3K	8X	View
King	Power Equipment Operators-Underground Sewer & Water	Truck Mount Portable Conveyor	$68.55	7A	3K	8X	View
King	Power Equipment Operators-Underground Sewer & Water	Welder	$69.16	7A	3K	8X	View
King	Power Equipment Operators-Underground Sewer & Water	Wheel Tractors, Farmall Type	$65.05	7A	3K	8X	View
King	Power Equipment Operators-Underground Sewer & Water	Yo Yo Pay Dozer	$68.55	7A	3K	8X	View
King	Power Line Clearance Tree Trimmers	Journey Level In Charge	$53.10	5A	4A		View
King	Power Line Clearance Tree Trimmers	Spray Person	$50.40	5A	4A		View
King	Power Line Clearance Tree Trimmers	Tree Equipment Operator	$53.10	5A	4A		View
King	Power Line Clearance Tree Trimmers	Tree Trimmer	$47.48	5A	4A		View
King	Power Line Clearance Tree Trimmers	Tree Trimmer Groundperson	$36.10	5A	4A		View
King	Refrigeration & Air Conditioning Mechanics	Journey Level	$84.01	6Z	1G		View
King	Residential Brick Mason	Journey Level	$58.82	5A	1M		View

King	Residential Carpenters	Journey Level	$32.06		1		View
King	Residential Cement Masons	Journey Level	$29.25		1		View
King	Residential Drywall Applicators	Journey Level	$46.43	7A	4C		View
King	Residential Drywall Tapers	Journey Level	$47.04	5P	1E		View
King	Residential Electricians	Journey Level	$36.01		1		View
King	Residential Glaziers	Journey Level	$45.90	7L	1H		View
King	Residential Insulation Applicators	Journey Level	$29.87		1		View
King	Residential Laborers	Journey Level	$26.18		1		View
King	Residential Marble Setters	Journey Level	$27.38		1		View
King	Residential Painters	Journey Level	$27.80		1		View
King	Residential Plumbers & Pipefitters	Journey Level	$39.43		1		View
King	Residential Refrigeration & Air Conditioning Mechanics	Journey Level	$54.12	5A	1G		View
King	Residential Sheet Metal Workers	Journey Level (Field or Shop)	$51.89	7F	1R		View
King	Residential Soft Floor Layers	Journey Level	$51.07	5A	3J		View
King	Residential Sprinkler Fitters (Fire Protection)	Journey Level	$50.89	5C	2R		View
King	Residential Stone Masons	Journey Level	$58.82	5A	1M		View
King	Residential Terrazzo Workers	Journey Level	$54.06	5A	1M		View
King	Residential Terrazzo/Tile Finishers	Journey Level	$24.39		1		View
King	Residential Tile Setters	Journey Level	$21.04		1		View
King	Roofers	Journey Level	$55.02	5A	3H		View
King	Roofers	Using Irritable Bituminous Materials	$58.02	5A	3H		View
King	Sheet Metal Workers	Journey Level (Field or Shop)	$85.88	7F	1E		View
King	Shipbuilding & Ship Repair	New Construction Boilermaker	$36.36	7V	1		View
King	Shipbuilding & Ship Repair	New Construction Carpenter	$36.36	7V	1		View
King	Shipbuilding & Ship Repair	New Construction Crane Operator	$36.36	7V	1		View
King	Shipbuilding & Ship Repair	New Construction Electrician	$36.36	7V	1		View
King	Shipbuilding & Ship Repair	New Construction Heat & Frost Insulator	$76.61	5J	4H		View
King	Shipbuilding & Ship Repair	New Construction Laborer	$36.36	7V	1		View
King	Shipbuilding & Ship Repair	New Construction Machinist	$36.36	7V	1		View
King	Shipbuilding & Ship Repair	New Construction Operating Engineer	$36.36	7V	1		View
King	Shipbuilding & Ship Repair	New Construction Painter	$36.36	7V	1		View
King	Shipbuilding & Ship Repair	New Construction Pipefitter	$36.36	7V	1		View
King	Shipbuilding & Ship Repair	New Construction Rigger	$36.36	7V	1		View
King	Shipbuilding & Ship Repair	New Construction Sheet Metal	$36.36	7V	1		View
King	Shipbuilding & Ship Repair	New Construction Shipfitter	$36.36	7V	1		View
King	Shipbuilding & Ship Repair	New Construction Warehouse/Teamster	$36.36	7V	1		View
King	Shipbuilding & Ship Repair	New Construction Welder / Burner	$36.36	7V	1		View

King	Shipbuilding & Ship Repair	Ship Repair Boilermaker	$46.15	7X	4J		View
King	Shipbuilding & Ship Repair	Ship Repair Carpenter	$44.95	7X	4J		View
King	Shipbuilding & Ship Repair	Ship Repair Crane Operator	$45.06	7Y	4K		View
King	Shipbuilding & Ship Repair	Ship Repair Electrician	$46.22	7X	4J		View
King	Shipbuilding & Ship Repair	Ship Repair Heat & Frost Insulator	$76.61	5J	4H		View
King	Shipbuilding & Ship Repair	Ship Repair Laborer	$46.15	7X	4J		View
King	Shipbuilding & Ship Repair	Ship Repair Machinist	$46.15	7X	4J		View
King	Shipbuilding & Ship Repair	Ship Repair Operating Engineer	$45.06	7Y	4K		View
King	Shipbuilding & Ship Repair	Ship Repair Painter	$46.15	7X	4J		View
King	Shipbuilding & Ship Repair	Ship Repair Pipefitter	$46.15	7X	4J		View
King	Shipbuilding & Ship Repair	Ship Repair Rigger	$46.15	7X	4J		View
King	Shipbuilding & Ship Repair	Ship Repair Sheet Metal	$46.15	7X	4J		View
King	Shipbuilding & Ship Repair	Ship Repair Shipwright	$44.95	7X	4J		View
King	Shipbuilding & Ship Repair	Ship Repair Warehouse / Teamster	$45.06	7Y	4K		View
King	Sign Makers & Installers (Electrical)	Journey Level	$49.44	0	1		View
King	Sign Makers & Installers (Non-Electrical)	Journey Level	$31.96	0	1		View
King	Soft Floor Layers	Journey Level	$51.07	5A	3J		View
King	Solar Controls For Windows	Journey Level	$13.50		1		View
King	Sprinkler Fitters (Fire Protection)	Journey Level	$82.39	5C	1X		View
King	Stage Rigging Mechanics (Non Structural)	Journey Level	$13.50		1		View
King	Stone Masons	Journey Level	$58.82	5A	1M		View
King	Street And Parking Lot Sweeper Workers	Journey Level	$19.09		1		View
King	Surveyors	Assistant Construction Site Surveyor	$68.02	7A	3K	8X	View
King	Surveyors	Chainman	$65.05	7A	3K	8X	View
King	Surveyors	Construction Site Surveyor	$69.16	7A	3K	8X	View
King	Telecommunication Technicians	Journey Level	$53.57	7E	1E		View
King	Telephone Line Construction - Outside	Cable Splicer	$41.81	5A	2B		View
King	Telephone Line Construction - Outside	Hole Digger/Ground Person	$23.53	5A	2B		View
King	Telephone Line Construction - Outside	Installer (Repairer)	$40.09	5A	2B		View
King	Telephone Line Construction - Outside	Special Aparatus Installer I	$41.81	5A	2B		View
King	Telephone Line Construction - Outside	Special Apparatus Installer II	$40.99	5A	2B		View
King	Telephone Line Construction - Outside	Telephone Equipment Operator (Heavy)	$41.81	5A	2B		View
King	Telephone Line Construction - Outside	Telephone Equipment Operator (Light)	$38.92	5A	2B		View
King	Telephone Line Construction - Outside	Telephone Lineperson	$38.92	5A	2B		View

King	Telephone Line Construction - Outside	Television Groundperson	$22.32	5A	2B		View
King	Telephone Line Construction - Outside	Television Lineperson/Installer	$29.60	5A	2B		View
King	Telephone Line Construction - Outside	Television System Technician	$35.20	5A	2B		View
King	Telephone Line Construction - Outside	Television Technician	$31.67	5A	2B		View
King	Telephone Line Construction - Outside	Tree Trimmer	$38.92	5A	2B		View
King	Terrazzo Workers	Journey Level	$54.06	5A	1M		View
King	Tile Setters	Journey Level	$54.06	5A	1M		View
King	Tile, Marble & Terrazzo Finishers	Finisher	$44.89	5A	1B		View
King	Traffic Control Stripers	Journey Level	$47.68	7A	1K		View
King	Truck Drivers	Asphalt Mix Over 16 Yards	$61.59	5D	4Y	8L	View
King	Truck Drivers	Asphalt Mix To 16 Yards	$60.75	5D	4Y	8L	View
King	Truck Drivers	Dump Truck	$60.75	5D	4Y	8L	View
King	Truck Drivers	Dump Truck & Trailer	$61.59	5D	4Y	8L	View
King	Truck Drivers	Other Trucks	$61.59	5D	4Y	8L	View
King	Truck Drivers - Ready Mix	Transit Mix	$61.59	5D	4Y	8L	View
King	Well Drillers & Irrigation Pump Installers	Irrigation Pump Installer	$17.71		1		View
King	Well Drillers & Irrigation Pump Installers	Oiler	$13.50		1		View
King	Well Drillers & Irrigation Pump Installers	Well Driller	$18.00		1		View

Washington State Department of Labor and Industries
Policy Statement
(Regarding the Production of "Standard" or "Non-standard" Items)

Below is the department's (State L&I's) list of criteria to be used in determining whether a prefabricated item is "standard" or "non-standard". For items not appearing on WSDOT's predetermined list, these criteria shall be used by the Contractor (and the Contractor's subcontractors, agents to subcontractors, suppliers, manufacturers, and fabricators) to determine coverage under RCW 39.12. The production, in the State of Washington, of non-standard items is covered by RCW 39.12, and the production of standard items is not. The production of any item outside the State of Washington is not covered by RCW 39.12.

1. Is the item fabricated for a public works project? If not, it is not subject to RCW 39.12. If it is, go to question 2.

2. Is the item fabricated on the public works jobsite? If it is, the work is covered under RCW 39.12. If not, go to question 3.

3. Is the item fabricated in an assembly/fabrication plant set up for, and dedicated primarily to, the public works project? If it is, the work is covered by RCW 39.12. If not, go to question 4.

4. Does the item require any assembly, cutting, modification or other fabrication by the supplier? If not, the work is not covered by RCW 39.12. If yes, go to question 5.

5. Is the prefabricated item intended for the public works project typically an inventory item which could reasonably be sold on the general market? If not, the work is covered by RCW 39.12. If yes, go to question 6.

6. Does the specific prefabricated item, generally defined as standard, have any unusual characteristics such as shape, type of material, strength requirements, finish, etc? If yes, the work is covered under RCW 39.12.

Any firm with questions regarding the policy, WSDOT's Predetermined List, or for determinations of covered and non-covered workers shall be directed to State L&I at (360) 902-5330.

WSDOT's
Predetermined List for
Suppliers - Manufactures - Fabricator

Below is a list of potentially prefabricated items, originally furnished by WSDOT to Washington State Department of Labor and Industries, that may be considered non-standard and therefore covered by the prevailing wage law, RCW 39.12. Items marked with an X in the "YES" column should be considered to be non-standard and therefore covered by RCW 39.12. Items marked with an X in the "NO" column should be considered to be standard and therefore not covered. Of course, exceptions to this general list may occur, and in that case shall be evaluated according to the criteria described in State and L&I's policy statement.

	ITEM DESCRIPTION	YES	NO
1.	Metal rectangular frames, solid metal covers, herringbone grates, and bi-directional vaned grates for Catch Basin Types 1, 1L, 1P, and 2 and Concrete Inlets. See Std. Plans		X
2.	Metal circular frames (rings) and covers, circular grates, and prefabricated ladders for Manhole Types 1, 2, and 3, Drywell Types 1, 2, and 3 and Catch Basin Type 2. See Std. Plans		X
3.	Prefabricated steel grate supports and welded grates, metal frames and dual vaned grates, and Type 1, 2, and 3 structural tubing grates for Drop Inlets. See Std. Plans.		X
4.	Concrete Pipe - Plain Concrete pipe and reinforced concrete pipe Class 2 to 5 sizes smaller than 60 inch diameter.		X
5.	Concrete Pipe - Plain Concrete pipe and reinforced concrete pipe Class 2 to 5 sizes larger than 60 inch diameter.		X
6.	Corrugated Steel Pipe - Steel lock seam corrugated pipe for culverts and storm sewers, sizes 30 inch to 120 inches in diameter. May also be treated, 1 thru 5.		X
7.	Corrugated Aluminum Pipe - Aluminum lock seam corrugated pipe for culverts and storm sewers, sizes 30 inch to 120 inches in diameter. May also be treated, #5.		X

	ITEM DESCRIPTION	YES	NO
8.	Anchor Bolts & Nuts - Anchor Bolts and Nuts, for mounting sign structures, luminaries and other items, shall be made from commercial bolt stock. See Contract Plans and Std. Plans for size and material type.		X
9.	Aluminum Pedestrian Handrail - Pedestrian handrail conforming to the type and material specifications set forth in the contract plans. Welding of aluminum shall be in accordance with Section 9-28.14(3).	X	
10.	Major Structural Steel Fabrication - Fabrication of major steel items such as trusses, beams, girders, etc., for bridges.	X	
11.	Minor Structural Steel Fabrication - Fabrication of minor steel Items such as special hangers, brackets, access doors for structures, access ladders for irrigation boxes, bridge expansion joint systems, etc., involving welding, cutting, punching and/or boring of holes. See Contact Plans for item description and shop drawings.	X	
12.	Aluminum Bridge Railing Type BP - Metal bridge railing conforming to the type and material specifications set forth in the Contract Plans. Welding of aluminum shall be in accordance with Section 9-28.14(3).		X
13.	Concrete Piling--Precast-Prestressed concrete piling for use as 55 and 70 ton concrete piling. Concrete to conform to Section 9-19.1 of Std. Spec..	X	
14.	Precast Manhole Types 1, 2, and 3 with cones, adjustment sections and flat top slabs. See Std. Plans.		X
15.	Precast Drywell Types 1, 2, and with cones and adjustment Sections. See Std. Plans.		X
16.	Precast Catch Basin - Catch Basin type 1, 1L, 1P, and 2 With adjustment sections. See Std. Plans.		X

	ITEM DESCRIPTION	YES	NO
17.	Precast Concrete Inlet - with adjustment sections, See Std. Plans		X
18.	Precast Drop Inlet Type 1 and 2 with metal grate supports. See Std. Plans.		X
19.	Precast Grate Inlet Type 2 with extension and top units. See Std. Plans		X
20.	Metal frames, vaned grates, and hoods for Combination Inlets. See Std. Plans		X
21.	Precast Concrete Utility Vaults - Precast Concrete utility vaults of various sizes. Used for in ground storage of utility facilities and controls. See Contract Plans for size and construction requirements. Shop drawings are to be provided for approval prior to casting		X
22.	Vault Risers - For use with Valve Vaults and Utilities X Vaults.		X
23.	Valve Vault - For use with underground utilities. See Contract Plans for details.		X
24.	Precast Concrete Barrier - Precast Concrete Barrier for use as new barrier or may also be used as Temporary Concrete Barrier. Only new state approved barrier may be used as permanent barrier.		X
25.	Reinforced Earth Wall Panels – Reinforced Earth Wall Panels in size and shape as shown in the Plans. Fabrication plant has annual approval for methods and materials to be used. See Shop Drawing. Fabrication at other locations may be approved, after facilities inspection, contact HQ. Lab.	X	
26.	Precast Concrete Walls - Precast Concrete Walls - tilt-up wall panel in size and shape as shown in Plans. Fabrication plant has annual approval for methods and materials to be used	X	

	ITEM DESCRIPTION	YES	NO
27.	Precast Railroad Crossings - Concrete Crossing Structure Slabs.	X	
28.	12, 18 and 26 inch Standard Precast Prestressed Girder – Standard Precast Prestressed Girder for use in structures. Fabricator plant has annual approval of methods and materials to be used. Shop Drawing to be provided for approval prior to casting girders. See Std. Spec. Section 6-02.3(25)A	X	
29.	Prestressed Concrete Girder Series 4-14 - Prestressed Concrete Girders for use in structures. Fabricator plant has annual approval of methods and materials to be used. Shop Drawing to be provided for approval prior to casting girders. See Std. Spec. Section 6-02.3(25)A .	X	
30.	Prestressed Tri-Beam Girder - Prestressed Tri-Beam Girders for use in structures. Fabricator plant has annual approval of methods and materials to be used. Shop Drawing to be provided for approval prior to casting girders. See Std. Spec. Section 6-02.3(25)A	X	
31.	Prestressed Precast Hollow-Core Slab – Precast Prestressed Hollow-core slab for use in structures. Fabricator plant has annual approval of methods and materials to be used. Shop Drawing to be provided for approval prior to casting girders. See Std. Spec. Section 6-02.3(25)A.	X	
32.	Prestressed-Bulb Tee Girder - Bulb Tee Prestressed Girder for use in structures. Fabricator plant has annual approval of methods and materials to be used. Shop Drawing to be provided for approval prior to casting girders. See Std. Spec. Section 6-02.3(25)A	X	
33.	Monument Case and Cover See Std. Plan.		X

	ITEM DESCRIPTION	YES	NO
34.	Cantilever Sign Structure - Cantilever Sign Structure fabricated from steel tubing meeting AASHTO-M-183. See Std. Plans, and Contract Plans for details. The steel structure shall be galvanized after fabrication in accordance with AASHTO-M-111.	X	
35.	Mono-tube Sign Structures - Mono-tube Sign Bridge fabricated to details shown in the Plans. Shop drawings for approval are required prior to fabrication.	X	
36.	Steel Sign Bridges - Steel Sign Bridges fabricated from steel tubing meeting AASHTO-M-138 for Aluminum Alloys. See Std. Plans, and Contract Plans for details. The steel structure shall be galvanized after fabrication in accordance with AASHTO-M-111.	X	
37.	Steel Sign Post - Fabricated Steel Sign Posts as detailed in Std Plans. Shop drawings for approval are to be provided prior to fabrication		X
38.	Light Standard-Prestressed - Spun, prestressed, hollow concrete poles.	X	
39.	Light Standards - Lighting Standards for use on highway illumination systems, poles to be fabricated to conform with methods and materials as specified on Std. Plans. See Specia Provisions for pre-approved drawings.	X	
40.	Traffic Signal Standards - Traffic Signal Standards for use on highway and/or street signal systems. Standards to be fabricated to conform with methods and material as specified on Std. Plans. See Special Provisions for pre-approved drawings	X	
41.	Precast Concrete Sloped Mountable Curb (Single and DualFaced) See Std. Plans.		X

	ITEM DESCRIPTION	YES	NO
42.	Traffic Signs - Prior to approval of a Fabricator of Traffic Signs, the sources of the following materials must be submitted and approved for reflective sheeting, legend material, and aluminum sheeting. **NOTE:** *** Fabrication inspection required. Only signs tagged "Fabrication Approved" by WSDOT Sign Fabrication Inspector to be installed	X	X
		Custom Message	Std Signing Message
43.	Cutting & bending reinforcing steel		X
44.	Guardrail components	X	X
		Custom End Sec	Standard Sec
45.	Aggregates/Concrete mixes	Covered by WAC 296-127-018	
46.	Asphalt	Covered by WAC 296-127-018	
47.	Fiber fabrics		X
48.	Electrical wiring/components		X
49.	treated or untreated timber pile		X
50.	Girder pads (elastomeric bearing)	X	
51.	Standard Dimension lumber		X
52.	Irrigation components		X

ITEM DESCRIPTION	YES	NO
53. Fencing materials		X
54. Guide Posts		X
55. Traffic Buttons		X
56. Epoxy		X
57. Cribbing		X
58. Water distribution materials		X
59. Steel "H" piles		X
60. Steel pipe for concrete pile casings		X
61. Steel pile tips, standard		X
62. Steel pile tips, custom	X	

Prefabricated items specifically produced for public works projects that are prefabricated in a county other than the county wherein the public works project is to be completed, the wage for the offsite prefabrication shall be the applicable prevailing wage for the county in which the actual prefabrication takes place.

It is the manufacturer of the prefabricated product to verify that the correct county wage rates are applied to work they perform.

See RCW 39.12.010
(The definition of "locality" in RCW 39.12.010(2) contains the phrase "wherein the physical work is being performed." The department interprets this phrase to mean the actual work site.

WSDOT's List of State Occupations not applicable to Heavy and Highway Construction Projects

This project is subject to the state hourly minimum rates for wages and fringe benefits in the contract provisions, as provided by the state Department of Labor and Industries.
The following list of occupations, is comprised of those occupations that are not normally used in the construction of heavy and highway projects.
When considering job classifications for use and / or payment when bidding on, or building heavy and highway construction projects for, or administered by WSDOT, these Occupations will be excepted from the included "Washington State Prevailing Wage Rates For Public Work Contracts" documents.

- Building Service Employees
- Electrical Fixture Maintenance Workers
- Electricians - Motor Shop
- Heating Equipment Mechanics
- Industrial Engine and Machine Mechanics
- Industrial Power Vacuum Cleaners
- Inspection, Cleaning, Sealing of Water Systems by Remote Control
- Laborers - Underground Sewer & Water
- Machinists (Hydroelectric Site Work)
- Modular Buildings
- Playground & Park Equipment Installers
- Power Equipment Operators - Underground Sewer & Water
- Residential *** ALL ASSOCIATED RATES ***
- Sign Makers and Installers (Non-Electrical)
- Sign Makers and Installers (Electrical)
- Stage Rigging Mechanics (Non Structural)

The following occupations may be used only as outlined in the preceding text concerning "WSDOT's list for Suppliers - Manufacturers - Fabricators"

- Fabricated Precast Concrete Products
- Metal Fabrication (In Shop)

Definitions for the Scope of Work for prevailing wages may be found at the Washington State Department of Labor and Industries web site and in WAC Chapter 296-127.

WAC 296-127-018 Agency filings affecting this section

Coverage and exemptions of workers involved in the production and delivery of gravel, concrete, asphalt, or similar materials.

(1) The materials covered under this section include but are not limited to: Sand, gravel, crushed rock, concrete, asphalt, or other similar materials.

(2) All workers, regardless of by whom employed, are subject to the provisions of chapter 39.12 RCW when they perform any or all of the following functions:

(a) They deliver or discharge any of the above-listed materials to a public works project site:

(i) At one or more point(s) directly upon the location where the material will be incorporated into the project; or

(ii) At multiple points at the project; or

(iii) Adjacent to the location and coordinated with the incorporation of those materials.

(b) They wait at or near a public works project site to perform any tasks subject to this section of the rule.

(c) They remove any materials from a public works construction site pursuant to contract requirements or specifications (e.g., excavated materials, materials from demolished structures, clean-up materials, etc.).

(d) They work in a materials production facility (e.g., batch plant, borrow pit, rock quarry, etc.,) which is established for a public works project for the specific, but not necessarily exclusive, purpose of supplying materials for the project.

(e) They deliver concrete to a public works site regardless of the method of incorporation.

(f) They assist or participate in the incorporation of any materials into the public works project.

(3) All travel time that relates to the work covered under subsection (2) of this section requires the payment of prevailing wages. Travel time includes time spent waiting to load, loading, transporting, waiting to unload, and delivering materials. Travel time would include all time spent in travel in support of a public works project whether the vehicle is empty or full. For example, travel time spent returning to a supply source to obtain another load of material for use on a public works site or returning to the public works site to obtain another load of excavated material is time spent in travel that is subject to prevailing wage. Travel to a supply source, including travel from a public works site, to obtain materials for use on a private project would not be travel subject to the prevailing wage.

(4) Workers are not subject to the provisions of chapter 39.12 RCW when they deliver materials to a stockpile.

(a) A "stockpile" is defined as materials delivered to a pile located away from the site of incorporation such that the stockpiled materials must be physically moved from the stockpile and transported to another location on the project site in order to be incorporated into the project.

(b) A stockpile does not include any of the functions described in subsection (2)(a) through (f) of this section; nor does a stockpile include materials delivered or distributed to multiple locations upon the project site; nor does a stockpile include materials dumped at the place of incorporation, or adjacent to the location and coordinated with the incorporation.

(5) The applicable prevailing wage rate shall be determined by the locality in which the work is performed. Workers subject to subsection (2)(d) of this section, who produce such materials at an off-site facility shall be paid the applicable prevailing wage rates for the county in which the off-site facility is located. Workers subject to subsection (2) of this section, who deliver such materials to a public works project site shall be paid the applicable prevailing wage rates for the county in which the public works project is located.

[Statutory Authority: Chapter 39.12 RCW, RCW 43.22.051 and 43.22.270. 08-24-101, § 296-127-018, filed 12/2/08, effective 1/2/09. Statutory Authority: Chapters 39.04 and 39.12 RCW and RCW 43.22.270. 92-01-104 and 92-08-101, § 296-127-018, filed 12/18/91 and 4/1/92, effective 8/31/92.]

APPENDIX A

PLANS

City of Kirkland

INCLUDED IN ADDITIONAL DOCUMENT

City of Kirkland

APPENDIX B

PRE-APPROVED PLANS

City of Kirkland

LAST REVISED:03/15/09

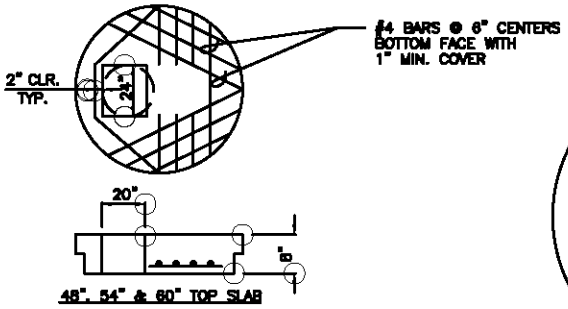

48", 54" & 60" TOP SLAB

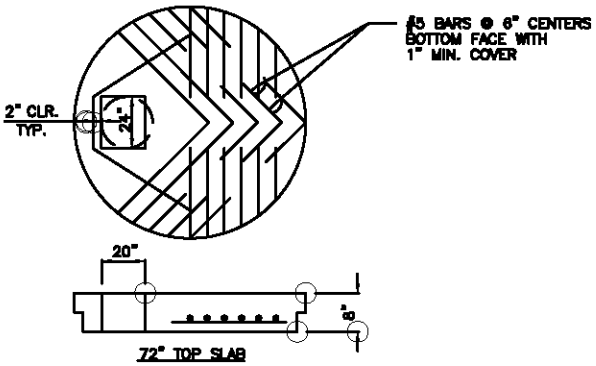

72" TOP SLAB

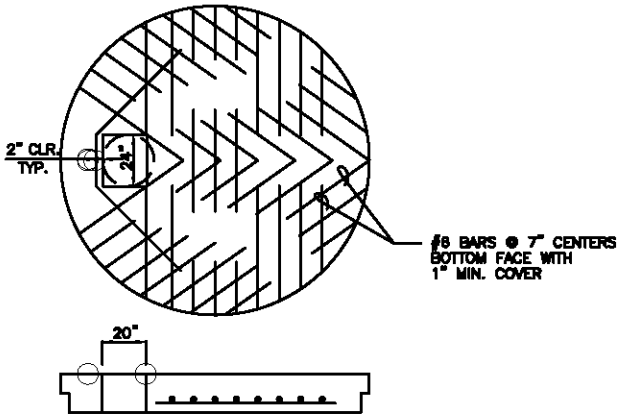

96" TOP SLAB

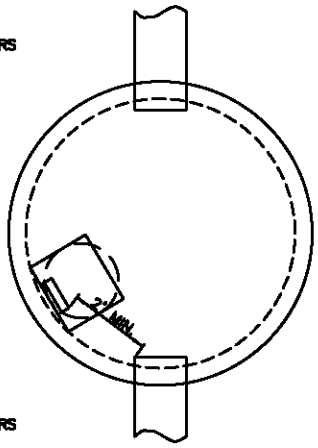

TYPICAL ORIENTATION
FOR ACCESS AND STEPS

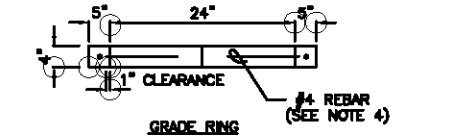

GRADE RING

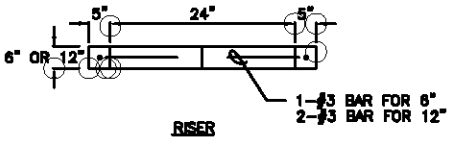

RISER

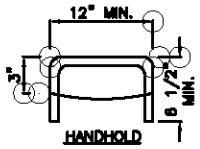

HANDHOLD

*ALL STEPS COPLOYMER PROPYLENE

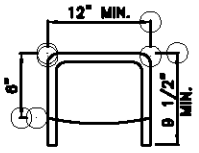

CATCH BASIN STEP

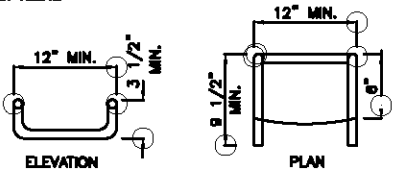

ELEVATION PLAN

DROP RUNG
CATCH BASIN STEP

NOTES:

1. PROPRIETARY CATCH BASIN HANDHOLDS AND STEPS ARE ACCEPTABLE, PROVIDED THAT THEY CONFORM TO SEC. R, ASTM C478, AASHTO M-199 AND MEET ALL WISHA REQUIREMENTS.
2. CATCH BASIN STEP/HANDHOLD LEGS SHALL BE PARALLEL OR APPROXIMATELY RADIAL AT THE OPTION OF THE MANUFACTURER, EXCEPT THAT ALL STEPS IN ANY CATCH BASIN SHALL BE SIMILAR. PENETRATION OF OUTER WALL BY A LEG IS PROHIBITED.
3. HANDHOLDS AND STEPS SHALL HAVE "DROP" RUNGS AS SHOWN ON DETAIL OR PROTUBERANCES TO PREVENT SIDEWAYS SLIP.
4. SLAB OPENING MAY BE 24" X 20" OR 24" DIAM.
5. AS AN ACCEPTABLE ALTERNATIVE TO REBAR, WELDED WIRE FABRIC HAVING A MIN. AREA OF 0.12 SQUARE INCHES PER FOOT MAY BE USED. WELDED WIRE FABRIC SHALL COMPLY TO ASTM A497.
6. LADDERS OR STEPS SHALL EXTEND TO WITHIN 16" OF BOTTOM OF CATCH BASIN.
7. HANGING LADDERS SHALL BE PERMANENTLY FASTENED AT TOP BY HANGING ON STEP AND BY BOLTING OR EMBEDDING IN CONCRETE. EACH SHALL BE EMBEDDED AT BOTTOM IN BASE.
8. ADDITIONAL SAFETY FEATURES MAY BE REQUIRED IN VERY DEEP OR UNUSUAL STRUCTURES.

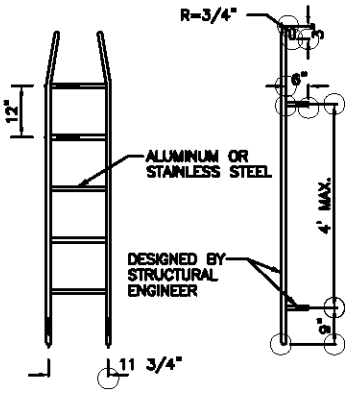

PREFABRICATED LADDER

CITY OF KIRKLAND	
PLAN NO. CK-D.12	
CITY OF KIRKLAND WASHINGTON	CATCH BASIN INLET PRECAST COVER AND EXTENSION UNITS

LAST REVISED:01/15/14

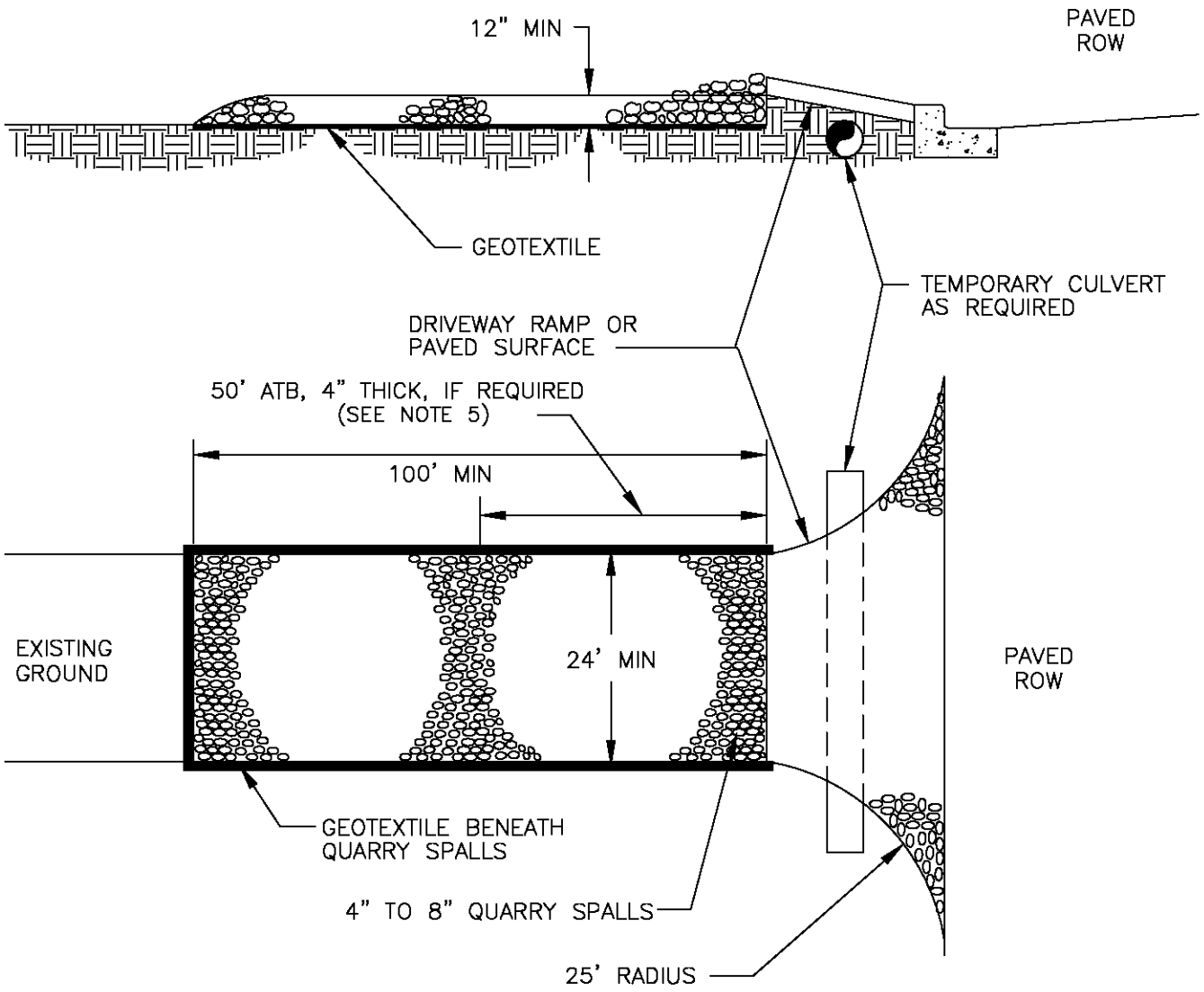

PLAT/COMMERCIAL

NOTES

1. PAD SHALL BE REMOVED AND REPLACED WHEN SOIL IS EVIDENT ON THE SURFACE OF THE PAD OR AS DIRECTED BY THE CITY CLEARING AND GRADING INSPECTOR.
2. PAD SHALL BE INSTALLED IN PLANTING STRIP AS APPROPRIATE.
3. PAD THICKNESS SHALL BE INCREASED IF SOIL CONDITIONS DICTATE AND/OR PER THE DIRECTION OF THE CITY CLEARING AND GRADING INSPECTOR.
4. CONTRACTOR RESPONSIBLE FOR CURB & GUTTER CONDITION.
5. ATB MAY BE REQUIRED PER PW INSPECTOR.
6. RECYCLED CONCRETE SHALL NOT BE USED FOR THE CONSTRUCTION ENTRANCE DUE TO HIGH LEVELS OF PH.

CITY OF KIRKLAND	
PLAN NO. CK-E.02	
CITY OF KIRKLAND WASHINGTON	TEMPORARY PLAT/COMMERCIAL CONST. ENTRANCE

LAST REVISED:09/14/16

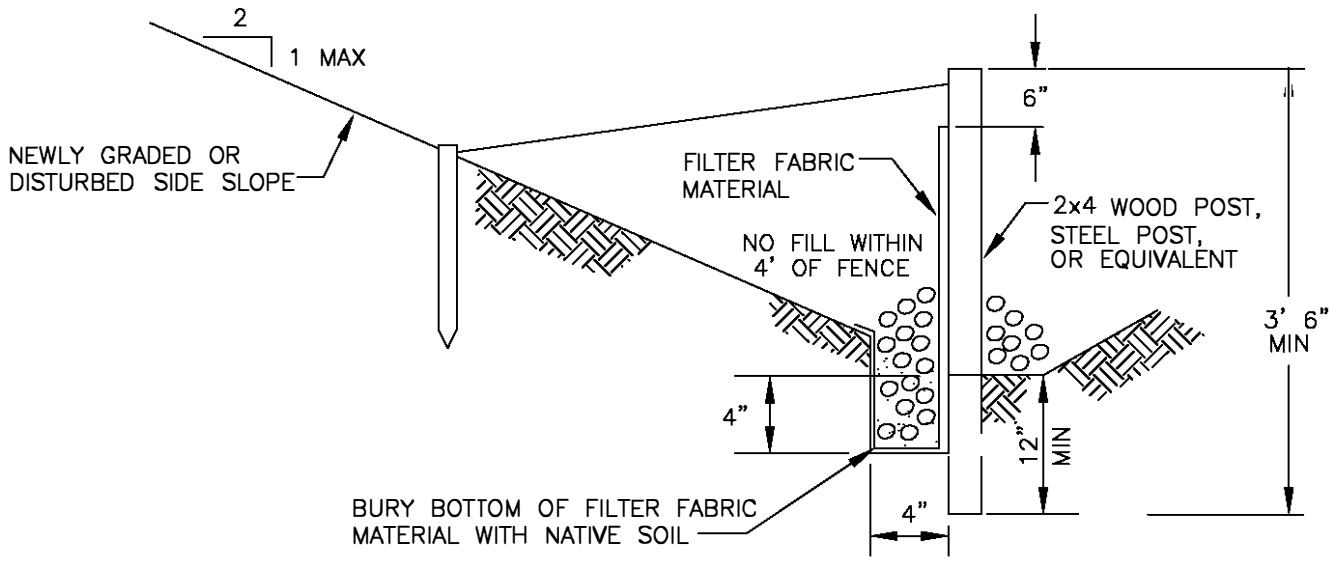

TYPICAL CROSS SECTION

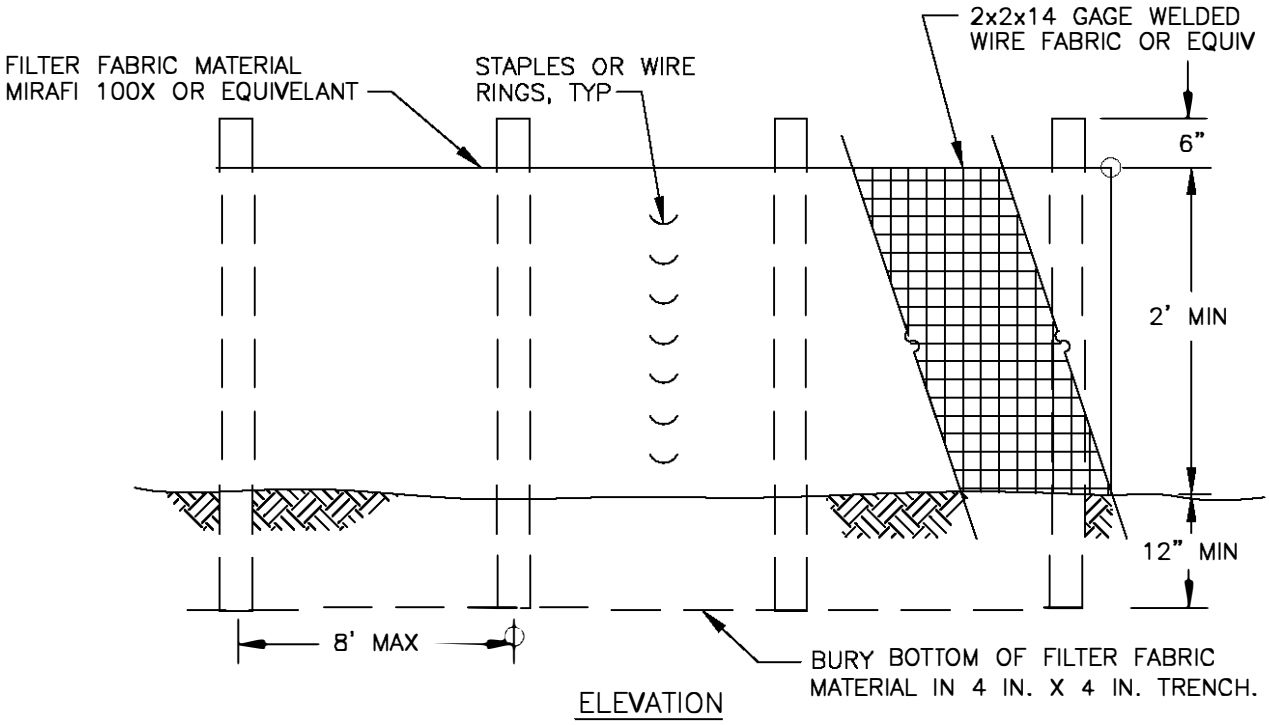

ELEVATION

NOTES

1. PREFAB FENCE ALLOWED IF REINFORCED AND APPROVED BY CITY INSPECTOR.
2. FENCE SHALL NOT BE INSTALLED ON SLOPES STEEPER THAN 2:1.
3. JOINTS IN FILTER FABRIC SHALL BE OVERLAPPED 6 INCHES AT POST.
4. USE STAPLES, WIRE RINGS, OR EQUIVALENT TO ATTACH FABRIC TO FENCE.
5. REMOVE SEDIMENT WHEN IT REACHES 1/3 FENCE HEIGHT.
6. LOCATION OF FENCING SHALL BE AS SHOWN ON APPROVED PLANS OR AS DIRECTED BY THE CITY.
7. MAXIMUM 100' SHEET OR OVERLAND FLOW PATH LENGTH TO SILT FENCE.
8. DO NOT DIRECT FLOWS GREATER THAN 0.5 CFS TO FENCE.
9. SILT FENCE SHOULD NOT BE INSTALLED IN STREAMS OR V-SHAPED DITCHES.

CITY OF KIRKLAND	
PLAN NO. CK-E.03	
CITY OF KIRKLAND WASHINGTON	SILT FENCE

LAST REVISED: 1/23/17

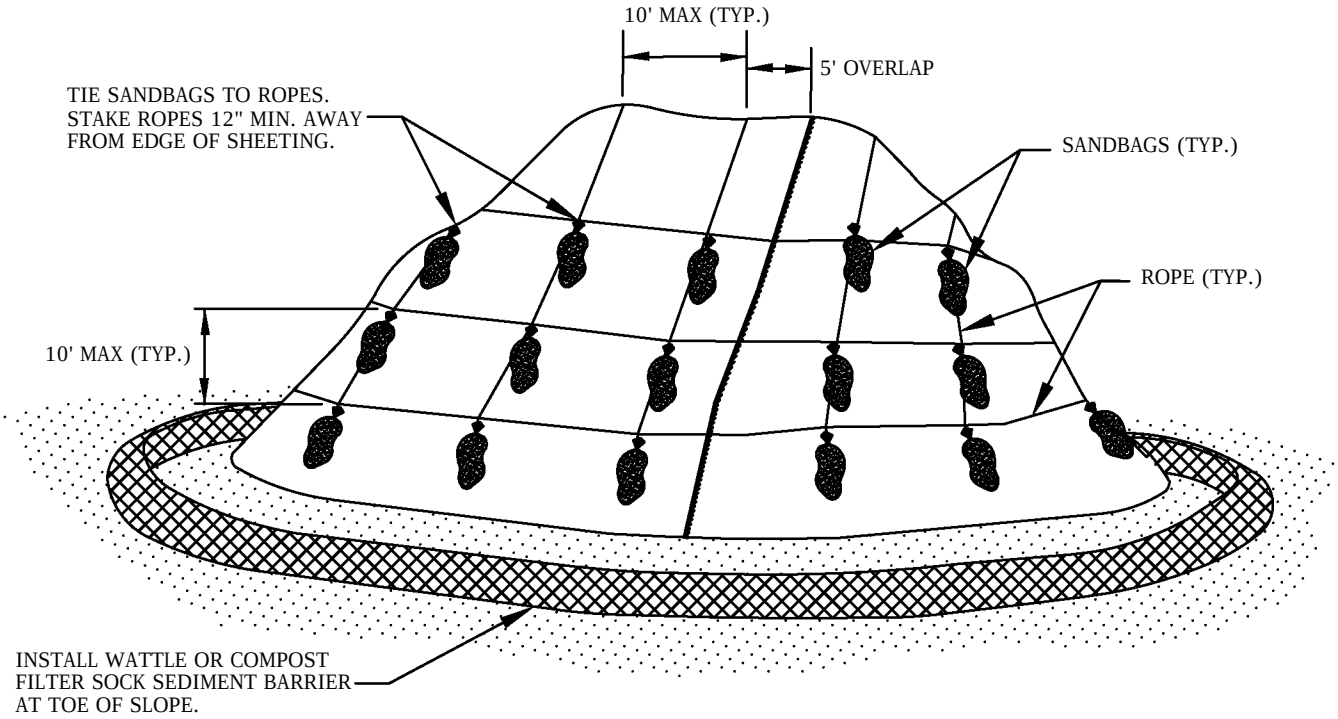

NOT TO SCALE

NOTES

1. INSTALL PLASTIC SHEETING VERTICALLY DOWN SLOPE.

2. INSTALL PLASTIC SHEETING SO EDGES OVERLAP AND ARE SHINGLED AWAY FROM PREVAILING WINDS.

3. PLASTIC SHEETING SHALL BE BLACK MIN 6 MIL.

CITY OF KIRKLAND	
PLAN NO. CK-E.05	
CITY OF KIRKLAND WASHINGTON	TEMPORARY STOCKPILE

LAST REVISED: 1/23/17

SLOPE SURFACE SHALL BE SMOOTH BEFORE PLACEMENT FOR PROPER SOIL CONTACT

STAPLING PATTERN AS PER MANUFACTURER'S RECOMMENDATIONS

IF THERE IS A BERM AT THE TOP OF SLOPE, ANCHOR UPSLOPE OF THE BERM

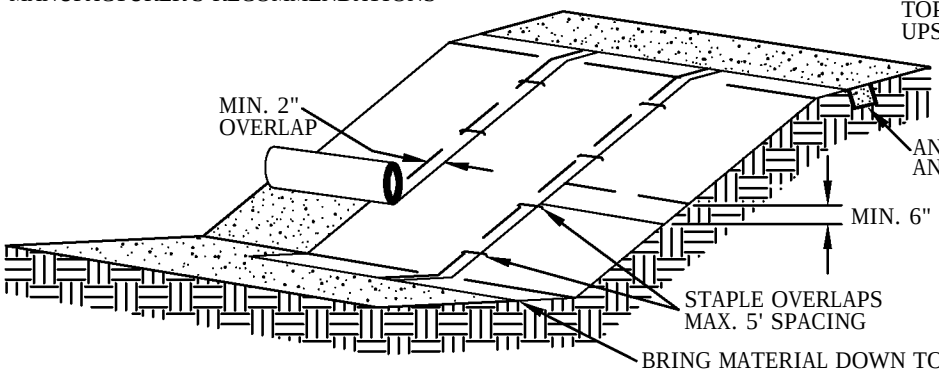

DO NOT STRETCH BLANKETS/MATTINGS TIGHT - ALLOW THE ROLLS TO MOLD TO ANY IRREGULARITIES

FOR SLOPES LESS THAN 3H:1V, ROLLS MAY BE PLACED IN HORIZONTAL STRIPS

LIME, FERTILIZE AND SEED BEFORE INSTALLATION. PLANTING OF SHRUBS, TREES, ETC. SHOULD OCCUR AFTER INSTALLATION.

NET & BLANKET INSTALLATION

NOT TO SCALE

NOTES:

1. IF BLANKET IS NOT LONG ENOUGH TO COVER THE ENTIRE SLOPE LENGTH, THE TRAILING EDGE OF THE UPPER BLANKET SHOULD OVERLAP THE LEADING EDGE OF THE LOWER BLANKET AND BE STAPLED.

2. MULCH IS REQUIRED FOR NETS, AND NOT REQUIRED FOR BLANKETS.

3. USE 100% BIODEGRADABLE BLANKETS IN SENSITIVE AREAS.

4. MAINTAIN GOOD CONTACT WITH THE GROUND. EROSION MUST NOT OCCUR BENEATH THE BLANKET.

5. INSPECT NETS AND BLANKETS AFTER EACH SIGNIFICANT STORM; MAINTAIN AND REPAIR PROMPTLY.

TEMPORARY STABILIZATION NOTES:

1. STRAW, WOOD FIBER CELLULOSE, COMPOST, AND CHIPPED SITE VEGETATION USED FOR TEMPORARY STABILIZATION SHALL BE PLACED AT A MINIMUM 2" THICK ACROSS THE AREA TO BE STABILIZED.

2. HYDRAULIC MATRICES SHALL BE APPLIED PER MANUFACTURER'S RECOMMENDATION.

3. SEE TABLE D.2.1.2.A IN THE 2016 KING COUNTY SURFACE WATER DESIGN MANUAL FOR MORE DETAIL.

CITY OF KIRKLAND

PLAN NO. CK– E.06

CITY OF KIRKLAND WASHINGTON

NETS, BLANKETS, TEMP. STABILIZATION

LAST REVISED: 04/15/12

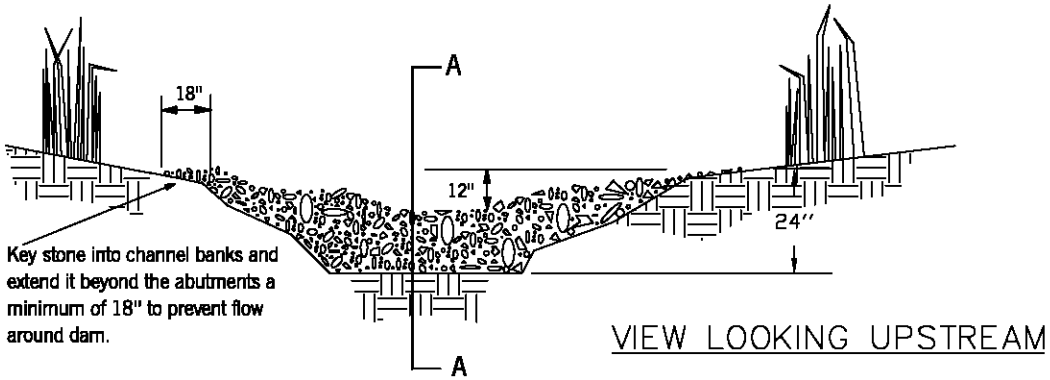

VIEW LOOKING UPSTREAM

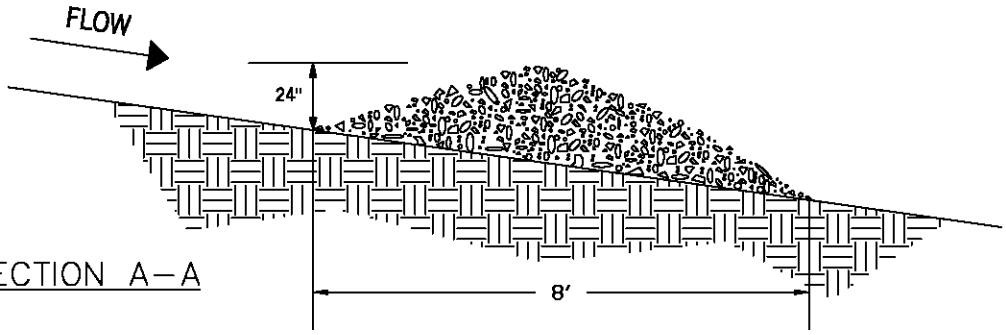

SECTION A–A

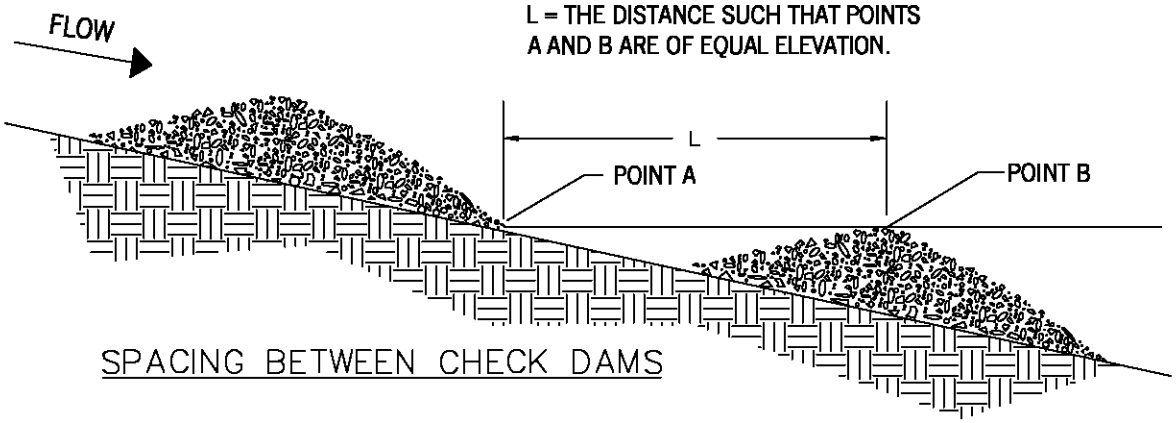

SPACING BETWEEN CHECK DAMS

NOTES:

1. CHECK DAMS TO BE CONSTRUCTED OF ROCK, PEA-GRAVEL FILLED BAGS, SAND BAGS, OR EQUIVALENT APPROVED BY PUBLIC WORKS.
2. PLACE CHECK DAMS PERPENDICULAR TO FLOW OF WATER.
3. SIDE SLOPES ARE 2:1 (H:V) OR FLATTER.
4. USE FILTER FABRIC FOUNDATION UNDER CHECK DAM.
5. ROCK CHECK DAMS SHALL BE CONSTRUCTED OF APPROPRIATELY SIZED ROCK, AND PLACED BY HAND OR MECHANICAL MEANS (NO DUMPING OF ROCK TO FORM DAM).
6. INSPECT DAM AFTER EACH SIGNIFICANT STORM; MAINTAIN AND REPAIR PROMPTLY.

NOT TO SCALE

CITY OF KIRKLAND	
PLAN NO. CK– E.07	
CITY OF KIRKLAND WASHINGTON	CHECK DAM

LAST REVISED:04/15/12

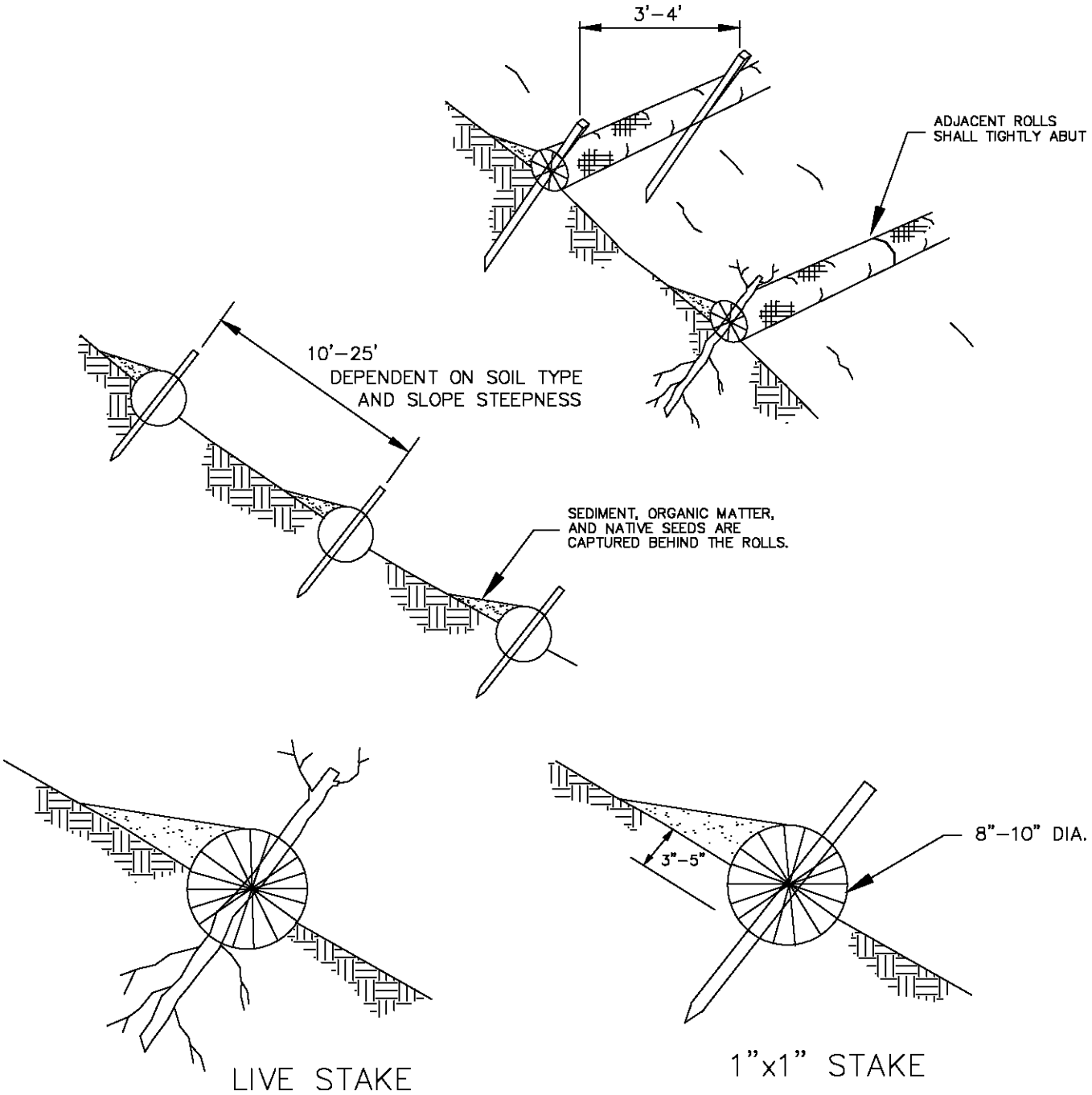

NOT TO SCALE

NOTES

1. STRAW ROLES SHALL BE PLACED ALONG SLOPE CONTOURS.
2. STRAW ROLL INSTALLATION REQUIRES THE PLACEMENT AND SECURE STAKING OF THE ROLL IN A TRENCH, 3"–5" DEEP, DUG ON CONTOUR. RUNOFF MUST NOT BE ALLOWED TO RUN UNDER OR AROUND ROLL.
3. DRIVE STAKE THROUGH MIDDLE OF WATTLE, LEAVING 2"–3" OF STAKE PORTRUDING ABOVE WATTLE.

CITY OF KIRKLAND	
PLAN NO. CK–E.10	
CITY OF KIRKLAND WASHINGTON	STRAW WATTLES

LAST REVISED: 1/2018

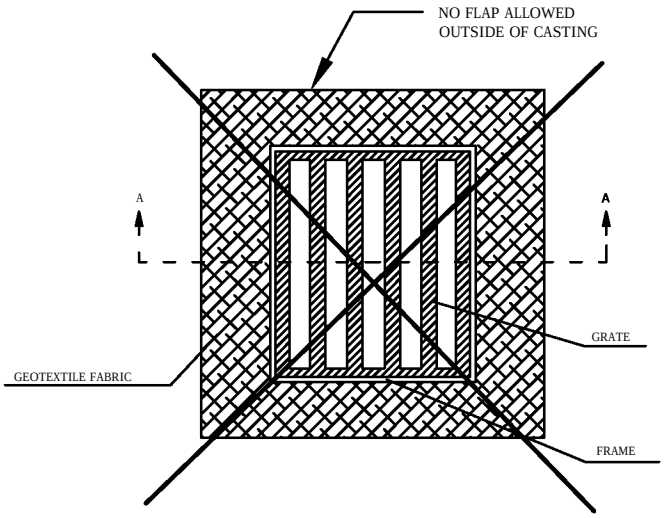

PROTECTION INSERSET WITH OUTER FLAP
(NOT ALLOWED)
PLAN VIEW - NTS

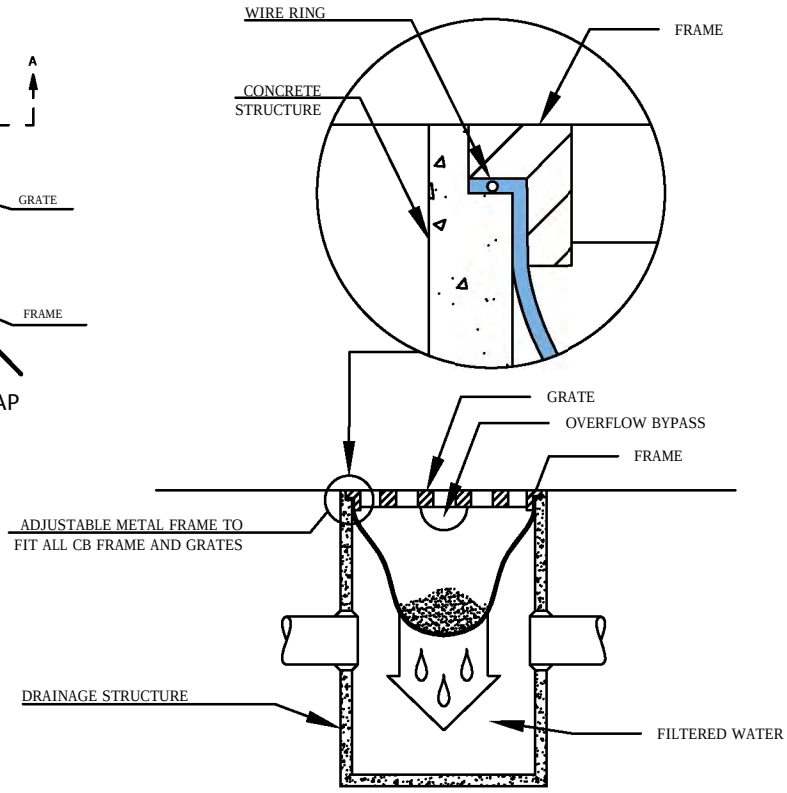

STORM DRAIN PROTECTION
INSERT SECTION A-A
NTS

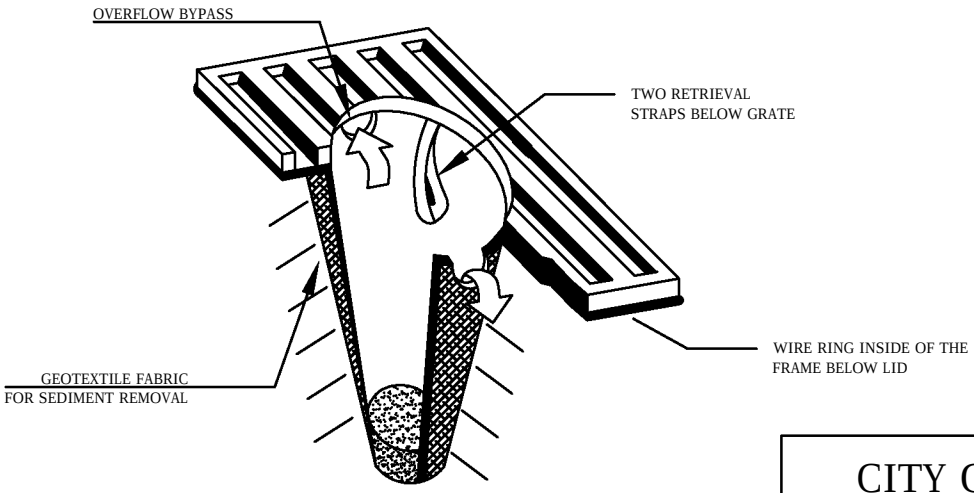

STORM DRAIN PROTECTION INSERT
ISOMETRIC VIEW (TYP.)
NTS

CITY OF KIRKLAND

PLAN NO. CK- E.11

CITY OF KIRKLAND WASHINGTON

STORM DRAIN
PROTECTION INSERT

LAST REVISED: 01/2019

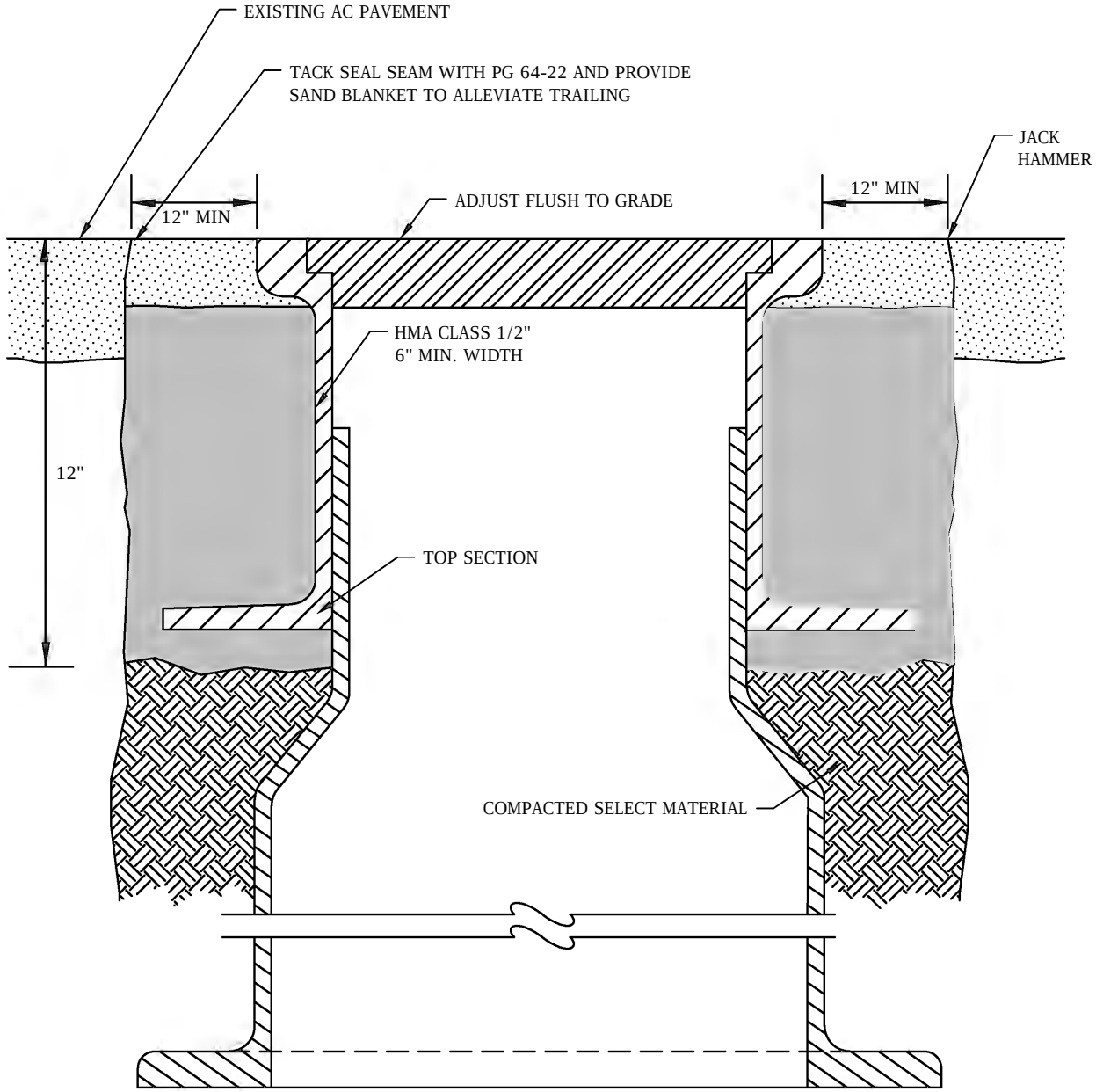

CITY OF KIRKLAND	
PLAN NO. CK- R.02	
CITY OF KIRKLAND WASHINGTON	GENERAL UTILITY ADJUSTMENT H.M.A. PAVEMENT

LAST REVISED:1/10/11

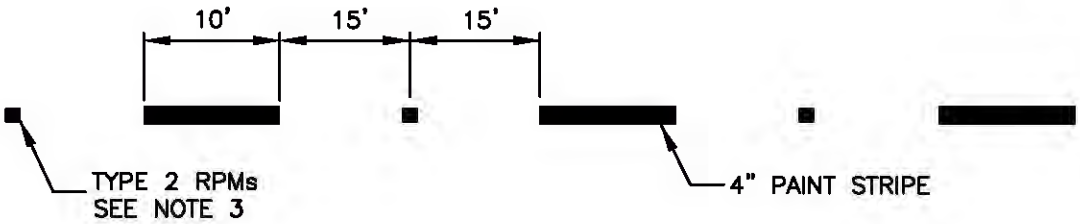

SKIP CENTER & LANE STRIPE DETAIL

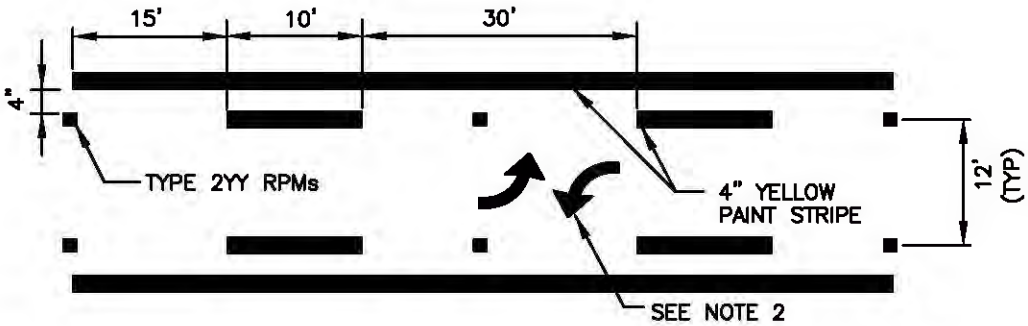

TWO-WAY LEFT TURN DETAIL

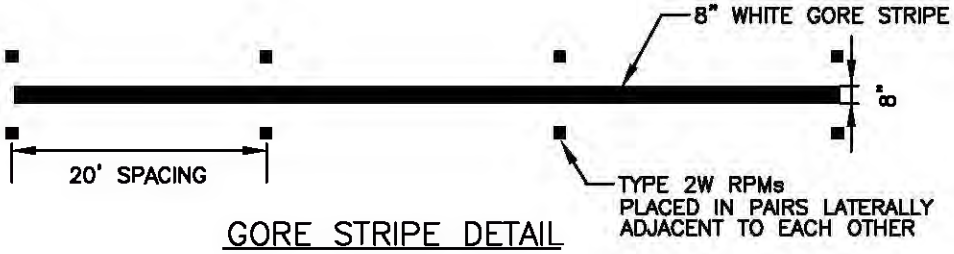

GORE STRIPE DETAIL

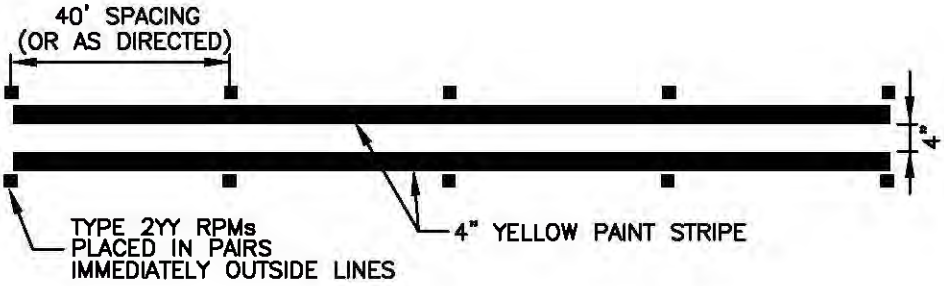

DOUBLE YELLOW CENTER DETAIL

NOTES

1. MATCH EXISTING PAVEMENT MARKING DIMENSIONS.
2. SEE CK-R.30 FOR TWO-WAY LEFT TURN ARROW PLACEMENT.
3. RAISED PAVEMENT MARKER COLOR SHALL CONFORM TO THE COLOR OF THE MARKING FOR WHICH THEY SUPPLEMENT, SUBSTITUE FOR, OR SERVE AS A POSITIONING GUIDE FOR.

CITY OF KIRKLAND

PLAN NO. CK-R.31

CITY OF KIRKLAND WASHINGTON

PAVEMENT MARKING DETAIL

LAST REVISED: 1/1/2019

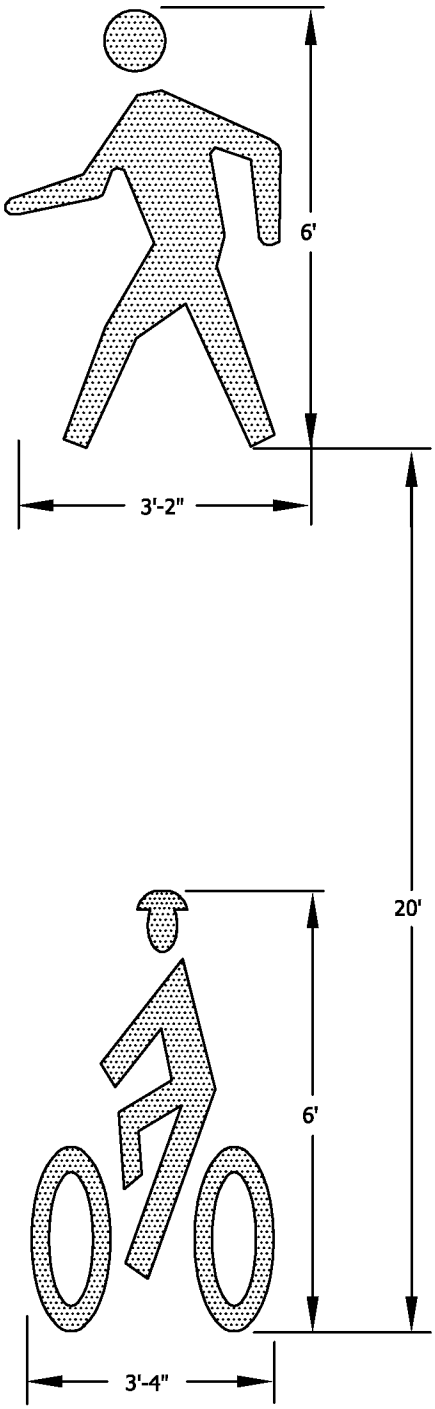

NOTES:

1. BIKE AND PEDESTRIAN LANE SYMBOLS MATERIAL SHALL BE 90 MILL, PERFORMED, SKID RESISTANT THERMOPLASTIC.
2. BICYCLE AND PEDESTRIAN SYMBOLS FACES ROADWAY CENTERLINE.

CITY OF KIRKLAND	
PLAN NO. CK–R.34B	
CITY OF KIRKLAND WASHINGTON	BICYCLE AND PEDESTRIAN LANE MARKINGS

DRAWN BY: MARK SUJKA

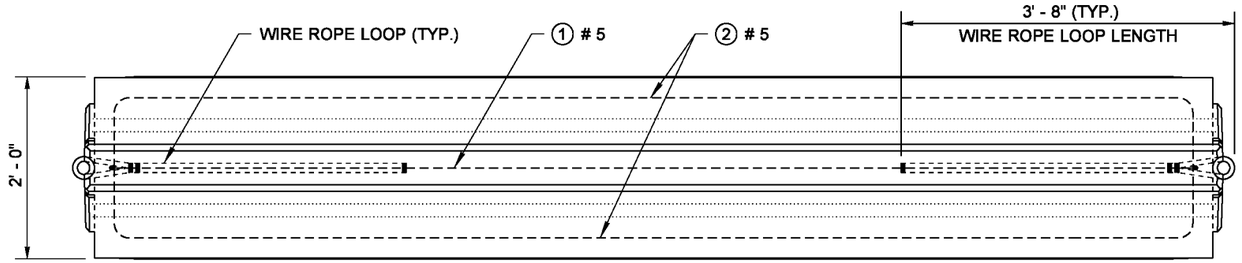

TOP VIEW

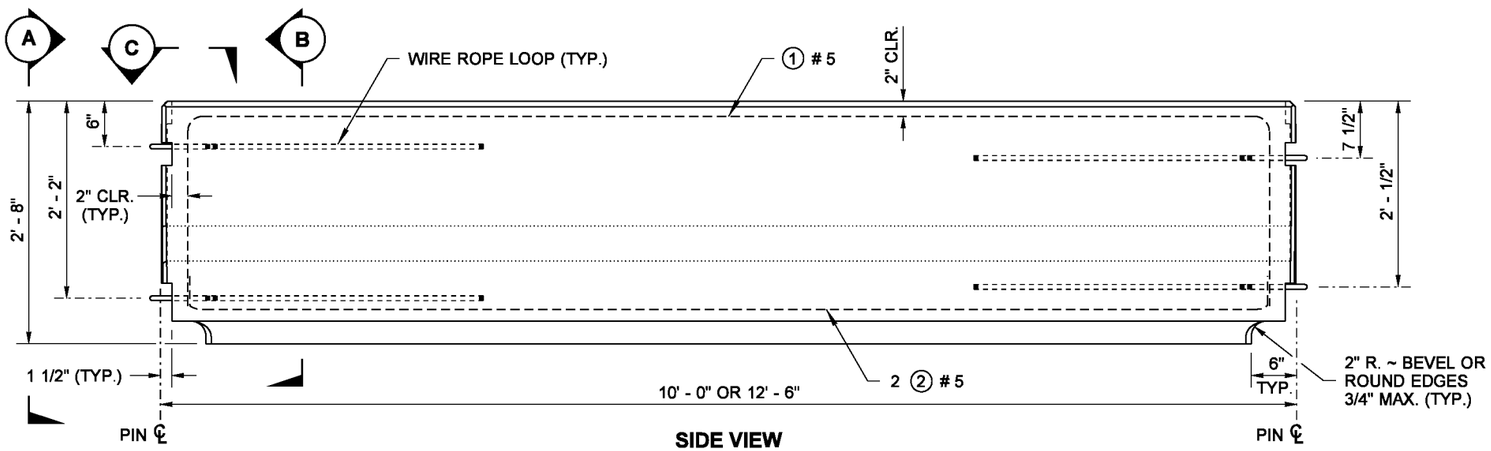

SIDE VIEW

BARRIER SECTION

NOTES

1. Wire rope loops shall be 3' - 8" long, except for the top loop of the Barrier Terminal, which shall be 2' - 0" long.
2. Except for the locations of the wire rope loops, the dimensions shown in END VIEW "A" are typical for both ends of a Barrier Section or opposing ends of Barrier Terminals.
3. Connecting and Drift Pin head designs vary among different manufacturers. Pin designs that are shaped differently than those shown in the detail are acceptable, if the bearing surface is within the minimum and maximum widths specified.
4. The vertical spacing of the Wire Rope Loops in a Barrier Terminal is determined by the end of the Barrier Segment to which it is being connected. See BARRIER CONNECTION DETAIL (Sheet 2).

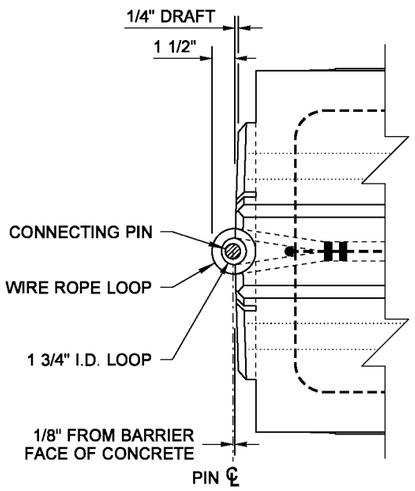

DETAIL C

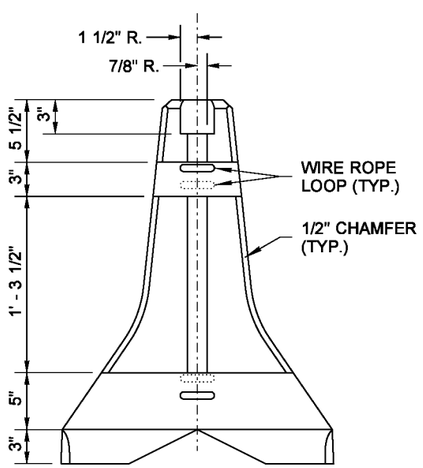

SEE NOTE 2

END VIEW (A)

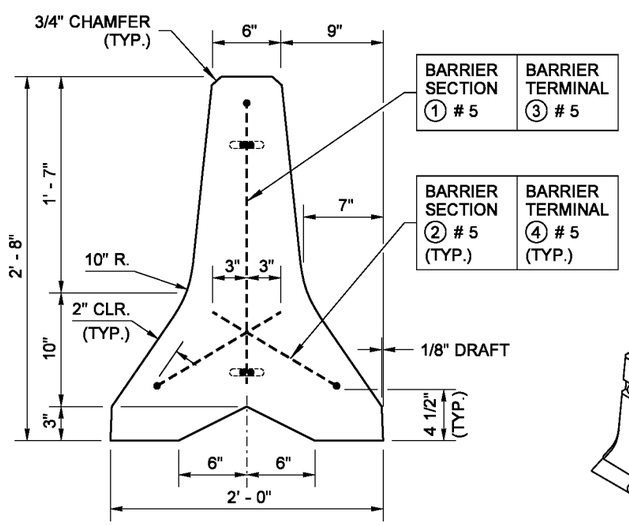

BARRIER SECTION	BARRIER TERMINAL
① # 5	③ # 5

BARRIER SECTION	BARRIER TERMINAL
② # 5 (TYP.)	④ # 5 (TYP.)

SECTION (B)

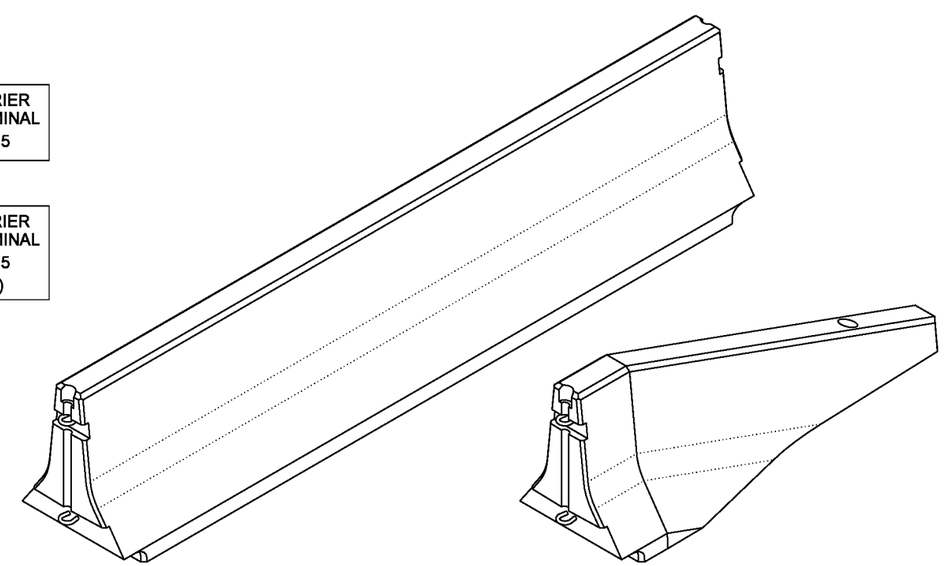

BARRIER SECTION **BARRIER TERMINAL**

ISOMETRIC VIEWS

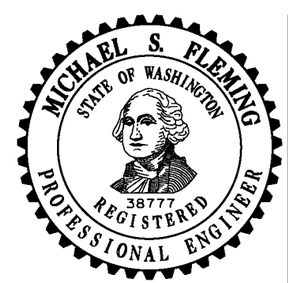

NOTE: THIS PLAN IS NOT A LEGAL ENGINEERING DOCUMENT BUT AN ELECTRONIC DUPLICATE. THE ORIGINAL, SIGNED BY THE ENGINEER AND APPROVED FOR PUBLICATION, IS KEPT ON FILE AT THE WASHINGTON STATE DEPARTMENT OF TRANSPORTATION. A COPY MAY BE OBTAINED UPON REQUEST.

CONCRETE BARRIER TYPE 2

STANDARD PLAN C-8

SHEET 1 OF 2 SHEETS

APPROVED FOR PUBLICATION

Pasco Bakotich III — STATE DESIGN ENGINEER

02-10-09 — DATE

Washington State Department of Transportation

DRAWN BY: MARK SUJKA

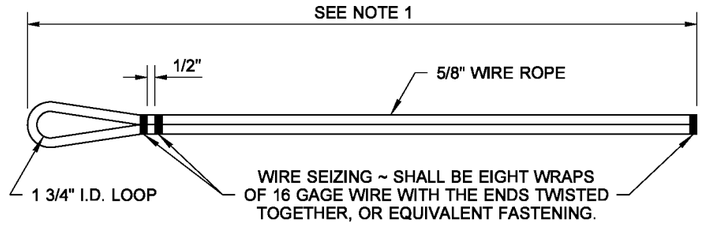

WIRE ROPE LOOP DETAIL

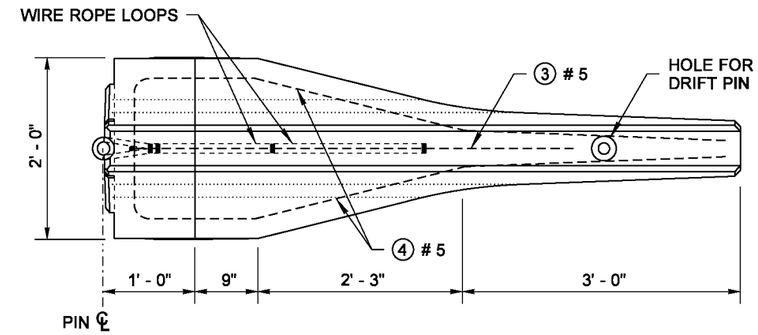

TOP VIEW

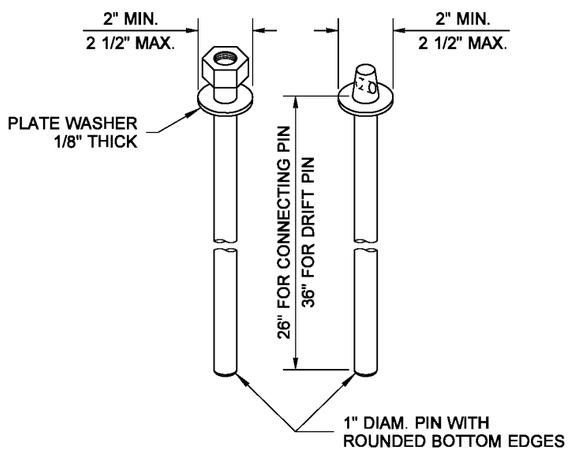

SEE NOTE 3

CONNECTING PINS AND DRIFT PINS

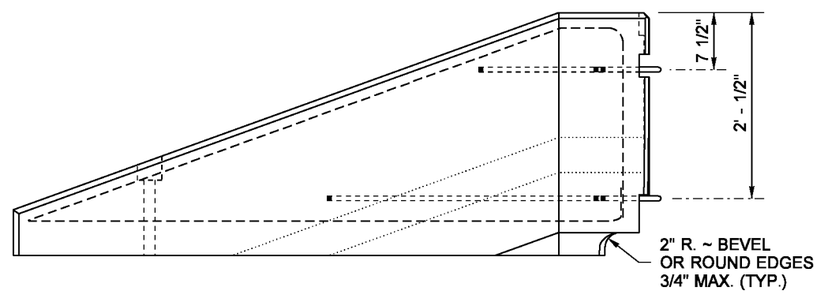

SIDE VIEW

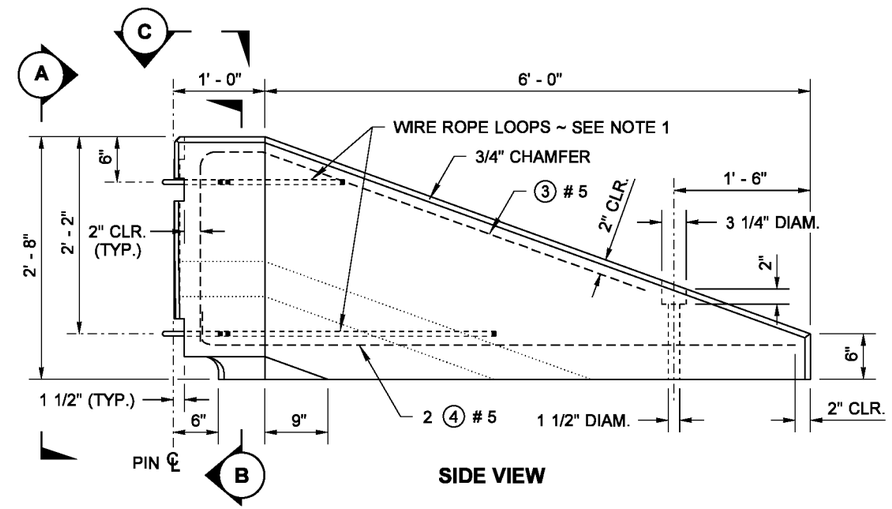

SIDE VIEW

SEE NOTE 4

BARRIER TERMINAL

BARRIER SECTION REINFORCING STEEL BENDING DIAGRAM

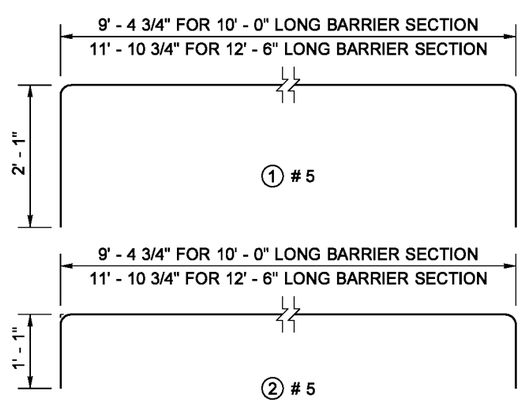

BARRIER TERMINAL REINFORCING STEEL BENDING DIAGRAM

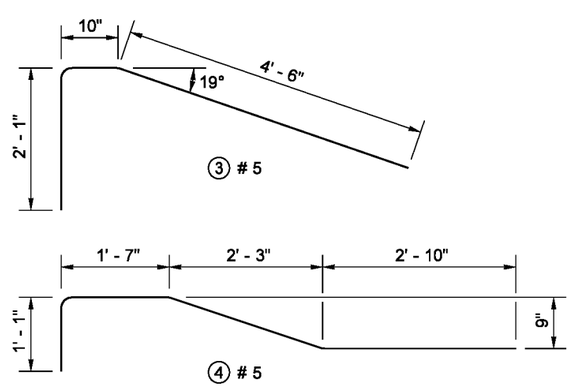

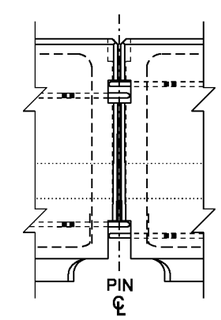

BARRIER CONNECTION DETAIL

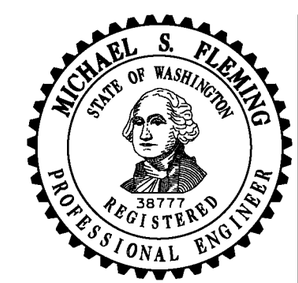

NOTE: THIS PLAN IS NOT A LEGAL ENGINEERING DOCUMENT BUT AN ELECTRONIC DUPLICATE. THE ORIGINAL, SIGNED BY THE ENGINEER AND APPROVED FOR PUBLICATION, IS KEPT ON FILE AT THE WASHINGTON STATE DEPARTMENT OF TRANSPORTATION. A COPY MAY BE OBTAINED UPON REQUEST.

CONCRETE BARRIER TYPE 2

STANDARD PLAN C-8

SHEET 2 OF 2 SHEETS

APPROVED FOR PUBLICATION

Pasco Bakotich III — STATE DESIGN ENGINEER

02-10-09 — DATE

Washington State Department of Transportation

DRAWN BY: LISA CYFORD

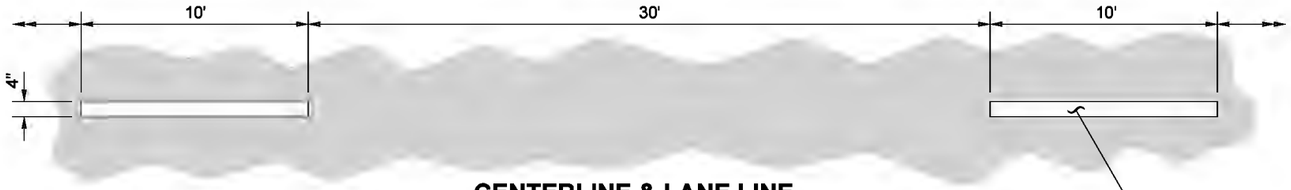

CENTERLINE & LANE LINE

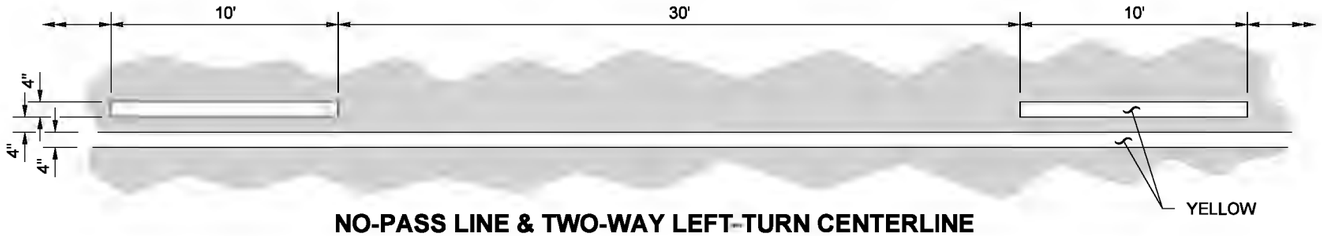

NO-PASS LINE & TWO-WAY LEFT-TURN CENTERLINE

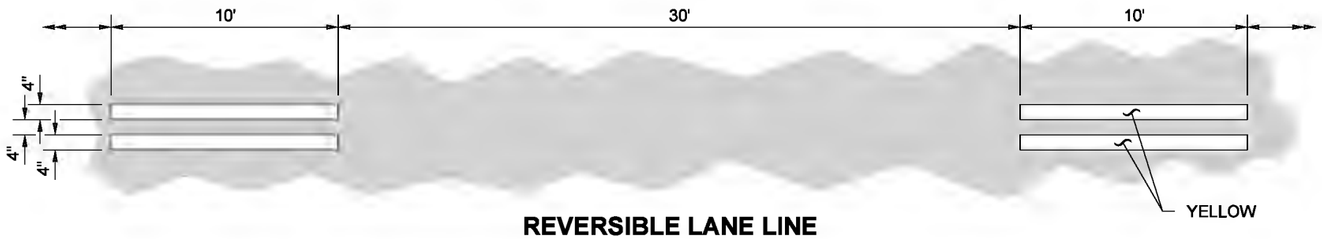

REVERSIBLE LANE LINE

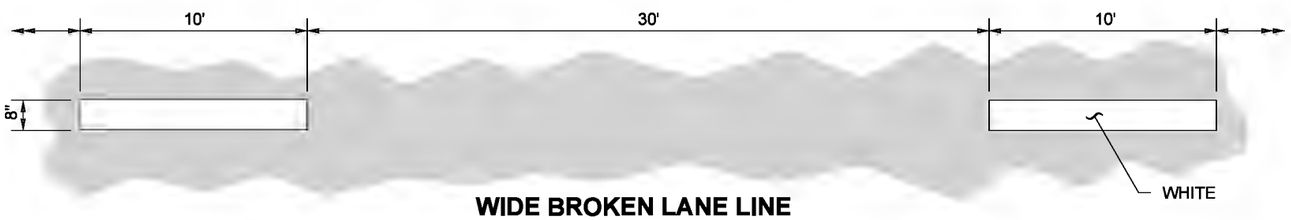

WIDE BROKEN LANE LINE

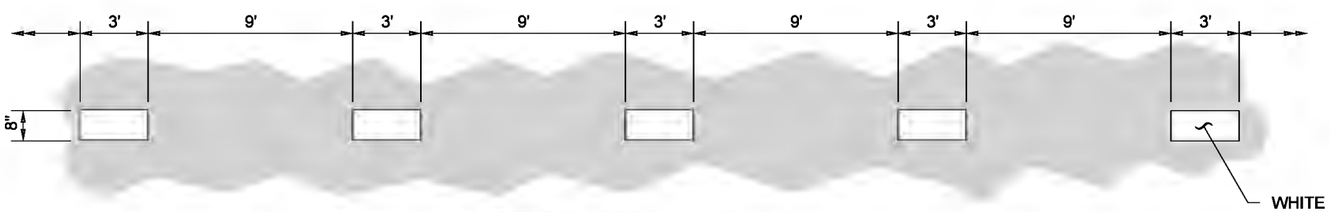

WIDE DOTTED LANE LINE

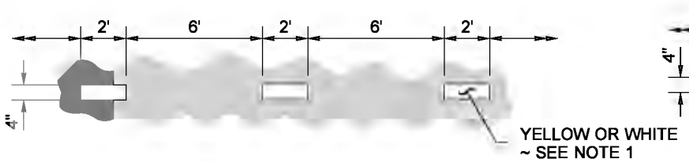

DOTTED EXTENSION LINE

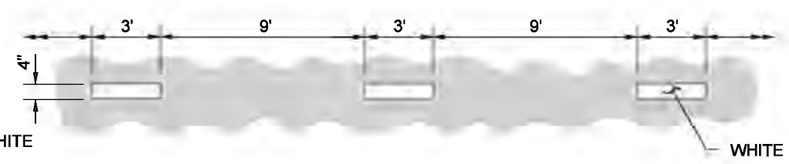

DOTTED LANE LINE

EDGE LINE & SOLID LANE LINE

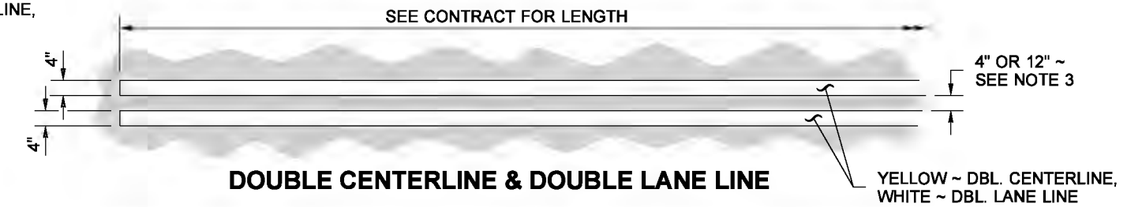

DOUBLE CENTERLINE & DOUBLE LANE LINE

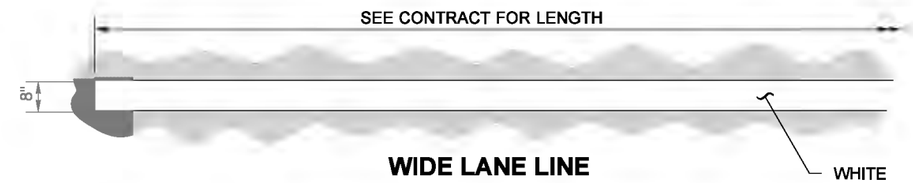

WIDE LANE LINE

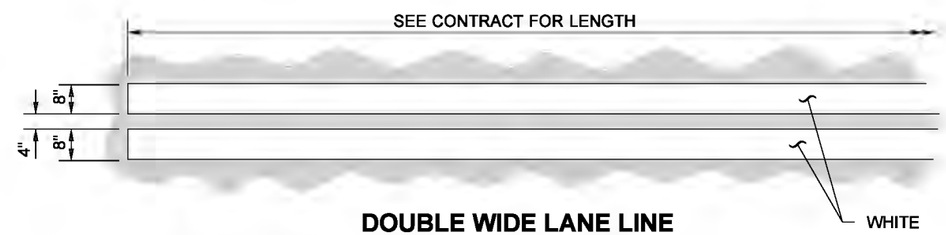

DOUBLE WIDE LANE LINE

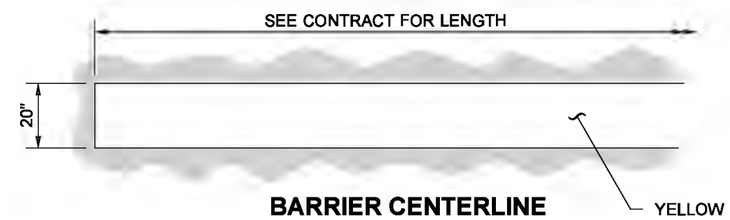

BARRIER CENTERLINE

NOTES

1. Dotted Extension Line shall be the same color as the line it is extending.
2. Edge Line shall be white on the right edge of traveled way, and yellow on the left edge of traveled way (on one-way roadways). Solid Lane Line shall be white.
3. The distance between the lines of the Double Centerline shall be 12" everywhere, except 4" for left-turn channelization and narrow roadways with lane widths of 10 feet or less. Local Agencies (on non-state routes) may specify a 4" distance for all locations.

   The distance between the lines of the Double Lane Line shall be 4".

NOTE: THIS PLAN IS NOT A LEGAL ENGINEERING DOCUMENT BUT AN ELECTRONIC DUPLICATE. THE ORIGINAL, SIGNED BY THE ENGINEER AND APPROVED FOR PUBLICATION, IS KEPT ON FILE AT THE WASHINGTON STATE DEPARTMENT OF TRANSPORTATION. A COPY MAY BE OBTAINED UPON REQUEST.

LONGITUDINAL MARKING PATTERNS

STANDARD PLAN M-20.10-02

SHEET 1 OF 1 SHEET

APPROVED FOR PUBLICATION

Pasco Bakotich III — STATE DESIGN ENGINEER

06-03-11 — DATE

Washington State Department of Transportation

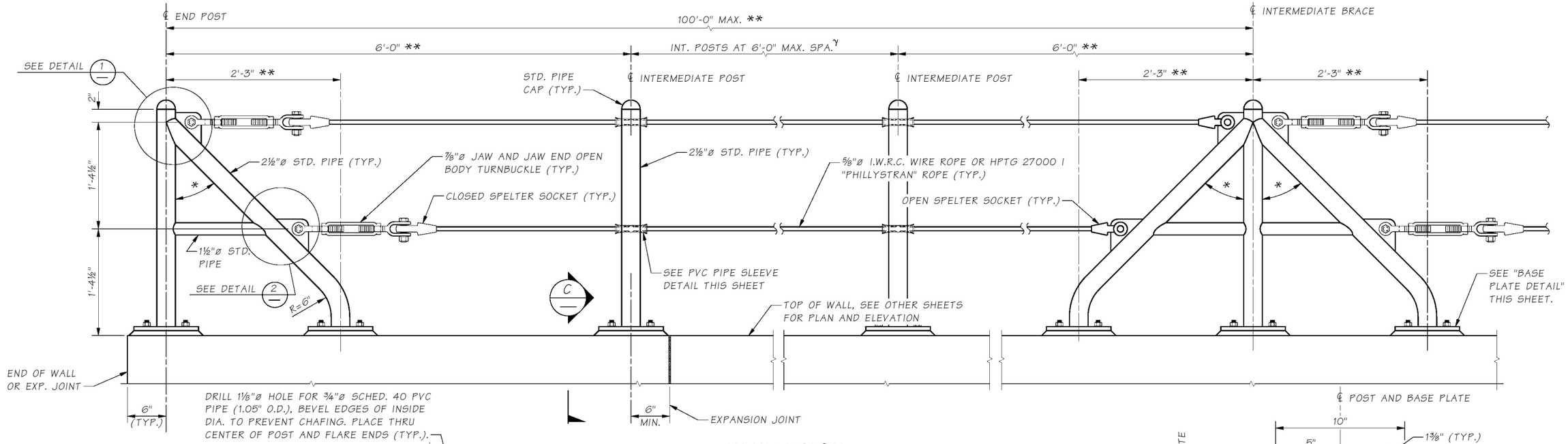

ELEVATION
CABLE FENCE

* ANGLES VARY WITH THE SLOPE OF THE TOP OF WALL. APPROX. 45° WHEN INSTALLED ON A LEVEL SURFACE.

** MEASURED PERPENDICULAR TO THE POSTS.

γ OMIT INTERMEDIATE POST WHEN SPACING BETWEEN END POST AND INTERMEDIATE BRACE IS LESS THAN 8'-6".

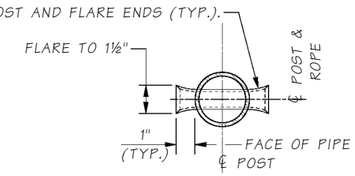

PVC PIPE SLEEVE DETAIL

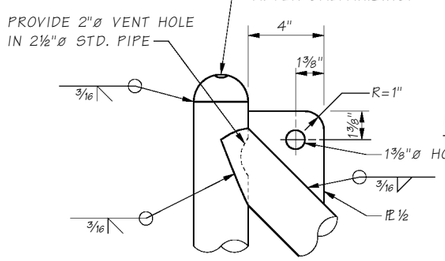

DETAIL 1

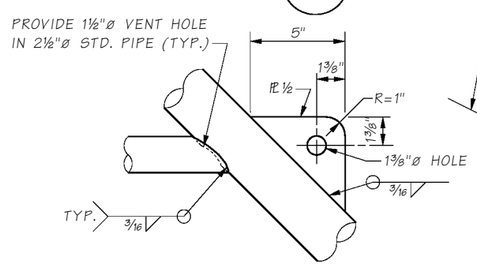

DETAIL 2

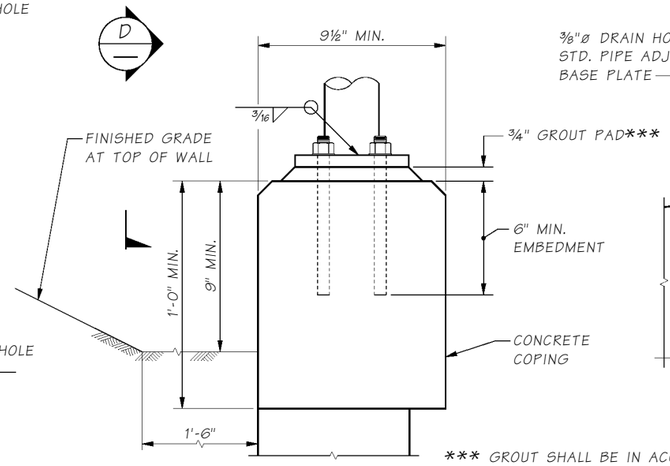

SECTION C

*** GROUT SHALL BE IN ACCORDANCE WITH SECTION 9-20.3(2)

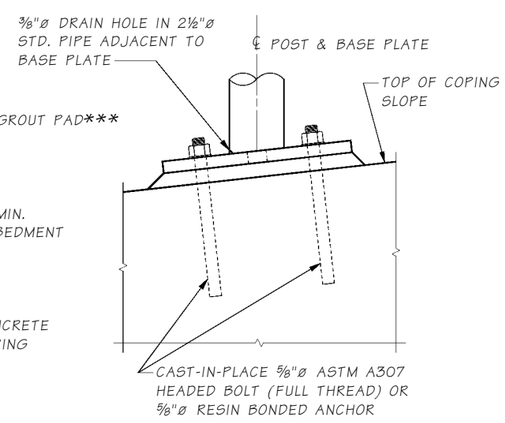

VIEW D

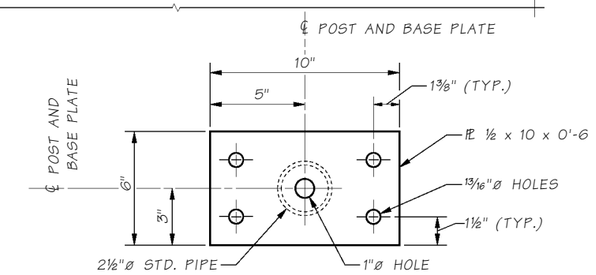

BASE PLATE DETAIL

NOTES:

1. ALL STEEL PIPE SHALL BE ASTM A53 GRADE B, TYPE E OR S, OR EQUIVALENT HSS ROUND TUBE ASTM A 500 GRADE B
2. ALL STEEL PLATE SHALL BE ASTM A 36 OR ASTM A 572.
3. ROPE SHALL CONSIST OF ZINC-COATED WIRES CONFORMING TO ASTM A 603, OR ASTM A 1023 WITH A PRESTRETCHED MODULUS OF ELASTICITY OF 15,000 KSI, OR "PHILLYSTRAN" ROPE.
4. ALL PARTS EXCEPT ROPE SHALL BE HOT DIP GALVANIZED IN ACCORDANCE WITH AASHTO M111, M232, OR ASTM F2329 AFTER FABRICATION, UNLESS NOTED OTHERWISE.
5. THE SPELTER SOCKETS AND SOCKETING PROCEDURE SHALL BE IN ACCORDANCE WITH THE SPELTER SOCKET AND ROPE MANUFACTURERS RECOMMENDATIONS.
6. ALL POSTS TO BE INSTALLED VERTICAL AND ROPE TO BE INSTALLED PARALLEL TO TOP OF WALL.
7. ROPE SHALL BE INSTALLED TO 400 LBS TENSION LEAVING A TAKE UP OF 6" STILL AVAILABLE IN THE TURNBUCKLE. THE CONTRACTOR SHALL SUBMIT CABLE TENSIONING DETAILS TO THE ENGINEER FOR ACCEPTANCE.
8. EACH CONTINUOUS LENGTH OF CABLE SHALL HAVE A TURNBUCKLE AT ONE END ONLY AND BE ANCHORED TO END POST WITH BRACE AT BOTH ENDS.
9. INTERMEDIATE POSTS AND BRACES SHALL NOT TO BE INSTALLED ACROSS EXPANSION JOINT.
10. CABLE FENCE WAS DESIGNED FOR A 200 LB. LOAD ON THE TOP RAIL APPLIED IN ANY DIRECTION, AS REQUIRED BY WASHINGTON ADMINISTRATIVE CODE 296-155-24615.
11. ROPE, SPELTER SOCKETS, TURNBUCKLES AND THIER CONNECTIONS SHALL HAVE A MINIMUM BREAKING STRENGTH OF 26 KIPS.

LAST REVISED: 04-8-19

SHEET ____ JOB NO. ____ SR 8.1-A6-2

Bridge Design Engr.	M:\STANDARDS\Walls\CABLE RAILING-FENCE\8.1-A6-2_CABLE FENCE_TOP MOUNTED.MAN								
Supervisor					REGION NO.	STATE	FED. AID PROJ. NO.	SHEET NO.	TOTAL SHEETS
Designed By					10	WASH.			
Checked By									
Detailed By					JOB NUMBER				
Bridge Projects Engr.									
Prelim. Plan By									
Architect/Specialist	DATE	REVISION	BY	APP'D					

BRIDGE AND STRUCTURES OFFICE

Washington State Department of Transportation

CABLE FENCE - TOP MOUNT

BRIDGE SHEET NO.

SHEET OF SHEETS

Mon Apr 08 13:47:54 2019

APPENDIX C

PERMITS

City of Kirkland

APPENDIX C PERMITS

PERMITS PENDING AT TIME OF PUBLISHING

City of Kirkland

APPENDIX D

GEOTECHNICAL REPORT

City of Kirkland

GEOTECHNICAL REPORT
Cedar Creek Culvert Replacement
Kirkland, Washington

HWA Project No. 2018-152-21

Prepared for
Stantec Consulting Services, Inc.

March 9, 2020

HWA GEOSCIENCES INC.
DBE/MWBE

Geotechnical Engineering
Pavement Engineering
Geoenvironmental
Hydrogeology
Inspection & Testing

HWA GEOSCIENCES INC.
DBE/MWBE

March 9, 2020
HWA Project No. 2018-152-21

Stantec Consulting Services, Inc.
11130 NE 33rd Place, Suite 200
Bellevue, Washington 98004

Attention: Jim McPherson

Subject: **GEOTECHNICAL REPORT**
Cedar Creek Culvert Replacement
Kirkland, Washington

Dear Mr. McPherson:

As requested, HWA GeoSciences Inc. (HWA) has performed a geotechnical investigation for the Cedar Creek Culvert Replacement in Kirkland, Washington. The objective of this work is to evaluate subsurface conditions and provide recommendations regarding design and construction of the proposed fish passable culvert and stream habitat enhancement. The attached geotechnical report summarizes the results of our study and presents our conclusions and recommendations as they pertain to design of the proposed improvements.

We appreciate the opportunity to provide geotechnical engineering services on this project. If you have any questions regarding this report or require additional information or services, please contact the undersigned at your convenience.

Sincerely,

HWA GEOSCIENCES INC.

JoLyn Gillie, P.E.
Geotechnical Engineer, Principal

TABLE OF CONTENTS

Page

1. INTRODUCTION 1
   - 1.1 GENERAL 1
   - 1.2 PROJECT DESCRIPTION 1
2. FIELD EXPLORATIONS 2
   - 2.1 EXPLORATORY BORINGS 2
   - 2.2 LABORATORY TESTING 3
   - 2.3 PREVIOUS EXPLORATIONS BY HWA 3
   - 2.4 EXPLORATIONS BY OTHERS 3
3. SITE CONDITIONS 4
   - 3.1 SURFACE CONDITIONS 4
   - 3.2 GENERAL GEOLOGY 4
   - 3.3 SUBSURFACE CONDITIONS 5
   - 3.4 GROUND WATER 6
4. GEOTECHNICAL RECOMMENDATIONS 6
   - 4.1 GENERAL 6
   - 4.1 SEISMIC DESIGN AND LIQUEFACTION CONSIDERATIONS 8
     - 4.1.1 Seismic Design Acceleration Coefficient 8
     - 4.1.2 Liquefaction Considerations 9
     - 4.1.3 Liquefaction Settlement Analysis 10
     - 4.1.4 Post Liquefaction Residual Shear Strength 10
     - 4.1.5 Liquefaction Induced Slope Failures 11
   - 4.2 SLOPE STABILITY EVALUATIONS 11
     - 4.2.1 Global Stability for Existing Slopes 12
     - 4.2.2 Global Stability for Proposed Eastern Wing Walls 13
   - 4.3 CULVERT FOUNDATION DESIGN 13
     - 4.3.1 Foundation Bearing Capacity 13
     - 4.3.2 Lateral Earth Pressures on Culvert Walls 14
     - 4.3.3 Culvert Subgrade Preparation 14
     - 4.3.4 Utility Protection or Relocation during Construction 14
   - 4.4 TEMPORARY EXCAVATION AND SHORING RECOMMENDATIONS 15
   - 4.5 GROUND WATER CONTROL 16
   - 4.6 RETAINING WALL RECOMMENDATIONS 17
     - 4.6.1 Retaining Walls for West Wing Walls 17
     - 4.6.2 Retaining Walls for East Wing Walls 17
     - 4.6.3 Pre-Cast or Cast-in-Place Wall Design Parameters 17
     - 4.6.4 SEW Wall Design 19
     - 4.6.5 SEW Design Parameters for West Wall and East Wall STA 10+52 to 10+85 19

4.6.6 SEW Design Parameters for East Walls STA 10+00 to 10+52 and 10+85 to 11+14 20
4.6.7 Mitigation for Global Instability for East Wall from STA 10+52 to 11+00 21
4.6.8 Mitigation for Global Instability for East Wall from STA 10+00 to 10+52 21
4.6.9 Installation of Rock-Filled Trench for Liquefaction Mitigation 22
4.6.10 General Wall Drainage 23
4.6.11 Backfill Wall Benching 23
4.6.12 Wall Subgrade Preparation 23
4.6.13 Stormwater Pipe Penetration of Wall 23
4.6.14 Pipe Bedding 24
4.7 STRUCTURAL FILL MATERIALS, PLACEMENT AND COMPACTION 24
4.8 ANCHOR ELEMENTS FOR LARGE WOODY DEBRIS 24
4.9 SCOUR RESISTANCE USING WOODY TOE PROTECTION 26
4.9.1 Design Earth Pressures for Woody Toe Protection 26
4.9.2 Temporary Excavations of Existing Streambank for Woody Toe Protection 26
4.9.3 Dewatering for Woody Toe Protection 27
4.9.4 Reuse of Materials in Excavations for Woody Toe Protection 27
4.9.5 Additional Backfill for Woody Toe Projection Slopes 27
4.10 WET WEATHER EARTHWORK 28
5. CONDITIONS AND LIMITATIONS 28
6. REFERENCE 30

LIST OF FIGURES (FOLLOWING TEXT)

Figure 1	Vicinity Map
Figure 2	Site and Exploration Plan
Figure 3A	Geologic Cross-Section A-A'
Figure 3B	Geologic Cross-Section B-B'
Figure 4	Extents of Materials Susceptible to Liquefaction
Figure 5A-5G	Global Stability Analysis - Without Improvements - Pseudo-Static Analysis
Figure 6A-6G	Global Stability Analysis - Without Improvements - Post-Liquefaction Analysis
Figure 7	Lateral Earth Pressures for Culvert Design
Figure 8A-8B	Global Stability Analysis - With Improvements - Wall STA 10+87 to 10+98
Figure 9A-9E	Global Stability Analysis - With Trench - Wall STA 10+00 to 10+52 - Pseudo-Static Analysis
Figure 10A-10E	Global Stability Analysis - With Trench - Wall STA 10+00 to 10+52 - Post-Liquefaction Analysis
Figure 11	Soil Resistance on Buried Logs

APPENDIX A: HWA FIELD EXPLORATIONS 2019

Figure A-1	Legend of Terms and Symbols Used on Exploration Logs
Figures A-2 & A-3	Logs of Borings BH-1 and BH-2

APPENDIX B: HWA LABORATORY TESTING 2019

Figures B-1 – B-3	Grain Size Distribution Test Results

APPENDIX C: LOGS OF PREVIOUS HWA EXPLORATIONS

APPENDIX D: LOGS OF EXPLORATIONS PERFORMED BY OTHERS

APPENDIX E: SLOPE STABILITY ANALYSES FOR THE EXISTING SLOPES

APPENDIX F: GLOBAL STABILITY ANALYSES FOR STATIC CONDITIONS FOR THE PROPOSED EASTERN WING WALLS

GEOTECHNICAL REPORT
CEDAR CREEK CULVERT REPLACEMENT
KIRKLAND, WASHINGTON

1. INTRODUCTION

1.1 GENERAL

This report presents the results of a geotechnical engineering study performed by HWA GeoSciences Inc. (HWA) in support of the Cedar Creek Culvert Replacement in Kirkland, Washington. The purpose of this study was to evaluate soil and ground water conditions in the vicinity of the project and to provide recommendations regarding design and construction of the proposed improvements. A draft preliminary geotechnical report was previously submitted, dated May 1, 2019 and revised May 10, 2019, which provided preliminary design parameters based on alternatives being considered for the project. Since that time, a proposed alignment for the culvert and associated walls has been selected, and our recommendations regarding the proposed improvements are provided in this geotechnical report. The recommendations provided in this report supersede the recommendations provided in the draft preliminary report.

Our work scope included drilling two exploratory borings, review of existing subsurface explorations, geotechnical laboratory testing of representative soil samples, engineering analyses, civil and structural design support, and preparation of this geotechnical report.

1.2 PROJECT DESCRIPTION

The project site is located approximately 250 feet south of the intersection of 100th Avenue NE and Simonds Road NE in Kirkland, Washington. The approximate location is shown on the Vicinity Map, Figure 1. The project will 1) replace the existing concrete box culvert and flood control structure, 2) reconstruct the stream channel to the east and west of 100th Avenue NE, and 3) endeavor to make the Cedar Creek culvert and stream channel fish passable.

The project will replace the existing 60-inch diameter corrugated metal pipe (CMP) culvert leading from the existing flow control structure and the 3-foot by 4-foot concrete box culvert crossing under 100th Avenue NE with a larger, fish passable culvert. The proposed alternative culvert will consist of a concrete box with interior dimensions of 8 feet high by 13 feet wide. The proposed culvert is anticipated to be approximately 120 feet long and will be located south of the existing culvert. The base of the new culvert will be about 2 to 3 feet below the existing stream bed elevation and will be countersunk below the new stream level. Streambed gravel and cobbles will be placed inside the culvert with a minimum clearance of 5 feet between the low point of the low flow channel and the culvert ceiling.

Additionally, retaining walls will be placed along the western and eastern boundaries of the right-of-way to support the roadway embankment and allow for future roadway widening. Based on the Plans provided to HWA on March 9, 2020, the upstream wingwalls to the west of the right-of-way will have heights up to 12 feet and the downstream wingwalls to the east of the right-of-way will have heights up to 22 feet. The downstream portion of the culvert wingwalls will extend approximately 40 feet northeast and 60 feet south from the culvert and are needed to accommodate the placement of structural fill to support the roadway widening proposed by the 100th Avenue NE Corridor Improvement Project.

2. FIELD EXPLORATIONS

2.1 EXPLORATORY BORINGS

HWA completed a field subsurface investigation which included drilling two exploratory borings. The boreholes, designated BH-1-19 and BH-2-19, were drilled by Geologic Drill, Inc. of Bellevue, Washington, under subcontract to HWA. The borings were drilled using a limited-access Bobcat track mounted drill rig (BH-1-19) and a limited-access Acker drill rig (BH-2-19), both using hollow-stem auger drilling techniques. The borings were drilled on the stream banks, upstream of the proposed culvert replacement location, and extended to depths of 21.5 feet in BH-1-19, and 16.5 feet in BH-2-19. The approximate locations of the boreholes, existing culvert, and proposed culvert are shown on the Site and Exploration Plan, Figure 2. The locations of the explorations were determined in the field by pacing and taping distances from existing site features.

Standard Penetration Test (SPT) sampling was performed, in accordance with ASTM D1586, in each borehole using a 2-inch outside diameter (OD), split-spoon, sampler advanced with a 140-pound safety hammer with rope and cat-head. During the SPT, a sample is obtained by driving the sampler 18 inches into the bottom of the borehole with the hammer free-falling 30 inches. The number of blows required for each 6 inches of penetration is recorded. The Standard Penetration Resistance (“N-value”) of the soil is taken to be the number of blows required for the final 12 inches of penetration. This resistance, or N-value, provides an indication of relative density of granular soils and the relative consistency of cohesive soils.

A geotechnical engineer from HWA logged the explorations and recorded pertinent information including sample depths, stratigraphy, soil engineering characteristics, and ground water occurrence. Figure A-1 presents a Legend of Terms and Symbols Used on Exploration Logs and Figures A-2 and A-3 contain the exploration logs for boreholes BH-1-19 and BH-2-19.

It should be noted that the stratigraphic contacts shown on the individual exploration logs represent the approximate boundaries between soil types; actual transitions may vary from what

is shown. The soil and ground water conditions depicted are only for the specific date and locations reported and, therefore, are not necessarily representative of other locations and times.

2.2 LABORATORY TESTING

Laboratory tests were conducted at HWA's Bothell, Washington laboratory, on selected samples retrieved from the borings. The tests determined relevant index and engineering properties of the soils encountered at the site. The tests included visual classifications, natural moisture content, and grain size distribution analyses using washed sieve methods. The tests were conducted in general accordance with appropriate American Society of Testing and Materials (ASTM) standards. The test results and a discussion of laboratory test methodology are presented in Appendix B, and/or displayed on the exploration logs in Appendix A, as appropriate.

2.3 PREVIOUS EXPLORATIONS BY HWA

HWA completed a field subsurface investigation for an earlier phase of this project for the proposed 100th Avenue NE Corridor Improvement Project. The findings of this study were utilized for the purpose of our analysis in the vicinity of the proposed culvert and retaining walls. The explorations include a series of exploratory borings conducted in 2016 and 2017 and hand auger test holes conducted in 2017. A portion of the borings were in the vicinity of the existing culvert including BH-7, BH-30, BH-31, HH-1, HH-2, and HH-3.

The approximate location of the relevant available soil information along the project alignment is presented on the Site and Exploration Plan, Figure 2. Previous subsurface investigation boring logs relevant to this location have been included in Appendix C as Figures C-1 through C-7.

2.4 EXPLORATIONS BY OTHERS

HWA conducted a comprehensive search for geotechnical information in the vicinity of the project alignment. This effort included a search of online geotechnical databases and a review of HWA's project library. This search yielded valuable information obtained by an exploration program conducted by King County (2001) in the vicinity of the project site that included two exploratory borings, designated B-3 and B-4. The approximate locations of these borings are presented on the Site and Exploration Plan, Figure 2. Logs of these explorations by others are presented in Appendix D.

3. SITE CONDITIONS

3.1 SURFACE CONDITIONS

The site is situated where Cedar Creek crosses underneath 100th Avenue NE in Kirkland, Washington. The project area extends a few hundred feet upstream and downstream of 100th Avenue NE. The topography ranges in elevation from approximately 173 feet above mean sea level (AMSL), at the downstream (eastern) end to approximately 200 feet near the centerline of the roadway at the south end of the project. These elevations are based on site surveying using the NAVD88 vertical datum.

At the site, the creek flows eastward through the delineated wetland area located west of the right-of-way before entering the culvert to flow under 100th Avenue NE. The stream exits the culvert on the east side which has steeper topographic relief compared with the west side. The surrounding creek channel consists of undeveloped stream banks with varying slopes that have been established with several tree species of varying sizes. Dense brush covering the ground surface was generally observed, although some of this was removed by clearing that occurred after our initial site visit.

At the 100th Avenue NE, several feet of fill have been placed to support the road. The embankment slopes are relatively shallow on the west side where the grade falls approximately 15 feet over a distance of approximately 50 feet from the edge of the roadway and then rising gently upstream to the west. On the east side of the road, the slope is steep with some areas as steep as 1.5H:1V (horizontal:vertical). The base of the slope is supported by an old rockery. Both the wall and the culvert at the base of the slope have been undercut by the stream flow at this location.

3.2 GENERAL GEOLOGY

Geologic information for the project area was obtained from the *Geologic map of the Kirkland Quadrangle* (Minard, J.P., 1983). This map indicates that the project site is underlain by mapped deposits of Vashon recessional glacial outwash (Qvr) and Vashon advance glacial outwash (Qva). Our explorations encountered recessional and advance outwash; however, alluvial deposits were also encountered that were not mapped at this location. Deposits of Vashon recessional outwash generally consist of unsorted, slightly silty to silty sand. Recessional outwash was deposited by meltwater emanating from the retreating glacial ice sheet. Consequently, it has not been overridden by glacial ice and is typically loose to medium dense. Advance outwash was deposited in a braided fluvial system as an alluvial sequence that issued from the front of an advancing glacier and was subsequently glacially-overridden. The overconsolidation and densification that results causes advance outwash deposits to typically range from dense to very dense. Alluvium generally consists of loose to medium dense, organic

rich sands, silts, and clays deposited in low energy stream and lake environments. Sandy alluvium is typically susceptible to liquefaction where it is observed below the ground water table. Alluvial silts and clays are typically subject to more significant settlement and consolidation, and are typically unsuitable for support of roadways and structures.

3.3 SUBSURFACE CONDITIONS

The site investigation and existing site subsurface information indicate that the project site is underlain by a sequence of fill over alluvium, overlying glacial recessional and advance outwash. Brief descriptions of the major soil units observed in our explorations are presented below, in order of deposition, beginning with the most recently deposited. A general cross section along the existing culvert alignment, designated as Cross-Section A-A,' is shown on Figure 3A and a cross section along the proposed culvert alignment, designated as Cross-Section B-B', is show on Figure 3B. The exploration logs in Appendices A, C and D provide more detail regarding the subsurface conditions observed at specific locations and depths.

- **Fill** – Fill was encountered in all of the borings except BH-2-19. The fill appeared to be thickest near the crest of the roadway and decreased in thickness towards the edges. This material generally consisted of very loose to medium dense, dark gray to brown, sand, slightly silty sand, and silty sand with varying amounts of gravel, ranging in thickness from about 2.5 feet up to 20 feet. The fill was likely placed to construct the roadway embankment during installation of the existing culvert and the adjacent residential developments.

- **Alluvium** – Alluvium was present in borings BH-1-19, BH-2-19, BH-7, and BH-30. We also interpret the medium dense silty sand with organics at about 19 feet in B-3 to be alluvium. The alluvium primarily consisted of loose to medium dense, silt, very sandy silt and silty sand with varying amounts of organics. The thickness of the alluvium ranged from about 5 to 10 feet. This modern alluvial material appears to be normally consolidated and was most likely deposited by Cedar Creek.

- **Vashon Recessional Outwash** - Recessional outwash consisting of medium dense, dark gray, very silty sand was encountered beneath the alluvial deposits in borings BH-1-19, BH-2-19, BH-7, and HH-3. These soils ranged from about 2.5 to 7.5 feet thick. Recessional outwash deposits may be deemed liquefiable where saturated and encountered in loose to medium dense conditions.

- **Vashon Advance Outwash** – Advance outwash was present in borings BH-1-19, BH-2-19, BH-7, BH-30, and B-3, beneath the recessional outwash deposits or the alluvium. The advance outwash was characterized by medium dense to very dense, dark gray sand; the amount of gravel and silt present in the outwash varied with depth and

between borings, as shown in the recorded logs in Appendix A. Each of the borings that encountered this material were terminated in this deposit.

3.4 GROUND WATER

Ground water was encountered in each of the explorations except for hand holes HH-1 and HH-2 and boring BH-31. Ground water was encountered at depths ranging from about 0.5 feet below the ground surface in BH-2-19 to about 20 feet in B-4. These elevations generally coincide with the elevation of Cedar Creek. Accordingly, the ground water within the project site is expected to vary with the water level within the creek, which will vary with fluctuations in season and weather conditions. Contractors should be prepared to encounter and manage varying ground water conditions and in response to significant precipitation events. The volume of ground water may increase where the proposed excavations intersect existing utility trenches, as significant ground water flows are likely to occur in the permeable gravel backfill within existing trenches.

4. GEOTECHNICAL RECOMMENDATIONS

4.1 GENERAL

The project site is underlain by fill over alluvium, overlying recessional and/or advance outwash, which will be suitable for support of the proposed four-sided box culvert and associated wing walls improvements provided they are constructed in accordance with the geotechnical recommendations stating in this report.

With proper subgrade preparation, the proposed culvert can be supported on the alluvial and outwash soils present that the site. The proposed culvert can be installed by excavating the existing embankment fill and sloping the sides of the excavation to allow installation of the culvert with minimal shoring. This will require a full roadway closure as the sloped excavations will extend a substantial distance to the north and south of the culvert alignment. The temporary slopes should meet the WISHA requirements for temporary slopes, which is the responsibility of the Contractor. For the site soils, the temporary slopes should have a maximum slope of 1.5H:1V. Adequate dewatering to lower the ground water table below the base of the excavation will be required. The Contractor will also be responsible to maintain existing utilities in their existing locations and be suspended above the open excavation trench cut for the duration of work.

Design of the culvert and walls must account for the presence of 2 to 15 feet of liquefiable soils at the site. The presence of liquefiable soils will potentially result in up to 8 inches of differential settlement along the culvert alignment, however, the box culvert is expected to be able to withstand the anticipated liquefaction induced settlement. For the walls, no significant impacts are anticipated for the western wing walls; however, the presence of liquefiable soils

below the eastern wing walls will likely result in large lateral movements due to flow sliding following liquefaction. Methods for mitigation of flow sliding are discussed with global stability of the eastern wing walls.

The eastern wing walls will experience global slope instability for two cases. First, analyses indicate that instability will occur as a result of ground shaking during the design seismic event. Second, large lateral displacements are expected due to liquefaction of alluvial soils present along the wall alignment. Mitigation methods for slope instability vary depending on the wall location, as defined by the wall stationing provided on Figure 2. For walls north of Wall STA 10+52, alluvial soils are generally encountered within about 2 to 5 feet below the base of the wall. For this section, we recommend over-excavation of the loose to medium dense alluvial materials from below the base of the wall and replacing the excavated soils with suitably compacted Structural Fill. For walls south of Wall STA 10+52, over-excavation and replacement below the wall becomes deeper increasing the cost and difficulty of installation. An alternative to removing the alluvial materials at the wall location would be to install a trench with high shear strength materials near the base of the slope where excavation depths to remove potentially liquefiable materials are shallower. We therefore provide recommendations for constructing an 8-foot wide, crushed rock-filled trench to provide stability during earthquake shaking and for the post-liquefaction condition for the eastern wall from Wall STA 10+00 to 10+52, as described in Section 4.6.9.

The wing walls on the west end of the culvert can consist of either pre-cast or cast-in-place concrete walls or structural earth walls (SEWs). The wall can be founded on the recessional and advance outwash underlying the walls. Although there is some potential for liquefaction settlement of the recessional outwash, it is likely to be limited. Based on our calculations, wall design should account for the potential of 1 to 2 inches of settlement to occur due to liquefaction settlement.

The wing walls on the east side of the corridor will be constructed using SEWs. We understand that installation of the walls is being considered in either staged construction over two phases or a full build out in this phase. We recommend constructing the full wall in one stage to reduce environmental impacts to the stream during the second phase and take advantage of the efficiency of design and construction of one wall rather than two separate walls.

Stream improvements upstream of the culvert will include installation of large woody debris (LWD). Manta-Ray anchors will be suitable to provide anchoring for the LWD. Manta-Ray anchors should be installed to meet a suitable pullout resistance to provide adequate capacity as well as embedment of at least 5 feet into the underlaying outwash materials.

Scour resistance will be provided to protect the slope north of the stream and east of 100th Avenue NE. This slope is currently anticipated to be protected with a combination of logs and root balls as a Woody Toe Protection system and placement of stream bed sediment and

stream bed cobbles to protect the root balls. Logs can be anchored by backfilling around them with soil and/or installing Manta-Ray anchors. Slopes constructed with stream bed sediment and cobbles to protect the root balls should be sloped no steeper than 3H:1V.

4.1 SEISMIC DESIGN AND LIQUEFACTION CONSIDERATIONS

We understand the culvert and walls will be designed in accordance with current AASHTO specifications, including the AASHTO *LRFD Bridge Design Specifications* (AASHTO, 2017). AASHTO does do not require consideration of seismic effects for design of box culverts and buried structures; however, walls are typically designed to withstand seismically induced loads from inertial loadings and for global stability.

4.1.1 Seismic Design Acceleration Coefficient

Earthquake loading for the wall structures was developed in accordance with Section 3.4 of the *AASHTO Guide Specifications for LRFD Seismic Bridge Design*, 2nd Edition, 2011 and the Washington State Department of Transportation (WSDOT) amendments to the AASHTO *Guide Specifications* provided in the *Bridge Design Manual (LRFD)* (WSDOT, 2019). For seismic analysis, the Site Class is required to be established and is determined based on the average soil properties in the upper 100 feet below the ground surface. Based on our explorations and understanding of site geology, it is our opinion that the proposed walls are underlain by soils that would be consistent with Site Class C if no liquefiable materials were present at the site. Due to the presence of liquefiable materials, the site classifies as Site Class F, and would require a site-specific analysis to be performed to determine the seismic coefficients. Based on our experience with similar sites, the presence of the liquefied soils would likely deamplify short period response, which includes peak ground acceleration (PGAs). Since the seismic design parameter required for design of the walls is PGA, using the coefficients associated with Site Class C will be conservative.

The design peak ground acceleration for the design level event (equal to a return period of 1,033 years) was obtained using BridgeLink, a program developed by WSDOT to incorporate the probabilistic seismic hazard parameters from the *2014 Updates to the National Hazard Maps* (Peterson, et al., 2014) as well as adopt the peak ground acceleration site coefficient (F_{pga}) provided in Table 11.8-1 of the ASCE 7-16. From BridgeLink, we obtained a mapped PGA of 0.388 g for the site. The corresponding site application factor for PGA (F_{pga}) for Site Class C is 1.2. Based on these values and using the General Procedure provided by AASHTO, we recommend using a design peak ground acceleration, designated the Acceleration Coefficient (A_s) by AASHTO, of 0.466 g for wall design.

4.1.2 Liquefaction Considerations

Liquefaction is a temporary loss of soil shear strength due to earthquake shaking. Loose to medium dense, saturated cohesionless soils are susceptible to earthquake-induced liquefaction; as well as low-plasticity silts and clays. Primary factors controlling the development of liquefaction include the intensity and duration of strong ground motions, the characteristics of subsurface soils, in-situ stress conditions and the depth to ground water. To evaluate the liquefaction susceptibility of the soils along the project alignment, the simplified procedure originally developed by Seed and Idriss (1971), updated by Youd et. Al., (2001), and by Idriss and Boulanger (2004, 2006) was used.

The simplified procedure is a semi-empirical approach which compares the cyclic resistance ratio (CRR) required to initiate liquefaction of the material to the cyclic shear stress ratio (CSR) induced by the design earthquake. The factor of safety relative to liquefaction is the ratio of the CRR to the CSR; where this ratio is computed to be less than one, the analysis would indicate that liquefaction is likely to occur during the design earthquake. The CRR is primarily dependent on soil density, with the current practice being to base it on the Standard Penetration Test (SPT) N-value, corrected for energy consideration, fines content and earthquake magnitude. CSR is generally determined by the formulation developed by Seed and Idriss (1971) and relates equivalent shear stress caused in the soil at any depth to the effective stress at that depth and the peak ground acceleration at the surface.

The analyses indicate that 2 to 15 feet of loose to medium dense, alluvial and recessional outwash sands and silts encountered below the groundwater table are likely to liquefy during a large earthquake. The elevations of potentially liquefiable soils are provided in Table 1 for each of the borings used in design of the culvert and wing walls. The approximate extents are shown on the cross-section of the culvert alignment provided on Figure 4, the Extents of Materials Susceptible to Liquefaction.

Table 1. Depths of Predicted Liquefiable Soils

Boring Number	Depth of Liquefiable Soils
BH-1-19	5 - 9.5 feet
BH-2-19	5 - 12 feet
BH-7	12.5 - 22 feet & 25 - 29 feet
BH-30	7.5 - 12.5 feet
B-3	15 - 19 feet

Liquefiable soils are shown below three key areas including: (1) the central portion of the culvert, (2) the western wing walls, and (3) portions of the eastern wing walls. The impacts of having liquefiable materials below these areas consist of the potential for vertical liquefaction

settlement, and for slope instability associated with flow liquefaction and lateral spreading. Our analyses methods and results are described in the following sections to evaluate potential for both liquefaction settlement and slope instability. Methods of mitigating the potential impacts are then provided.

4.1.3 Liquefaction Settlement Analysis

For liquefaction susceptible soil deposits, excess pore water pressure builds up during the earthquake excitation, leading to the loss of strength that occurs as a result of liquefaction. After the shaking stops, excess pore water pressures dissipate toward a zone where water pressure is relatively lower, usually the ground surface. The dissipation is accompanied by a reconsolidation of the soils (Ishihara and Yoshimine, 1992 & Tokimatsu and Seed, 1987). The reconsolidation is manifested at the ground surface as vertical settlement, usually termed as liquefaction-induced settlement or seismic settlement.

The magnitudes of potential liquefaction-induced settlement were evaluated using the methodologies developed by Idriss and Boulanger (2008), which are based on the relationship between cyclic stress ratio, corrected SPT blow counts, and volumetric strain. Using these methods, liquefaction-induced settlement along the project alignment are estimated to vary from 1 to 8 inches at the ground surface and is likely to be differential in nature. It should be noted that the culvert and retaining walls will generally be subject to lower liquefaction settlements as the depth of potentially liquefiable soils below the footings is less than that observed over the full depth of the borings. For the culvert with invert elevations 177 at the west end and 174 at the east end, we anticipate settlement ranging from no settlement up to about 4 inches. At the west wing walls, we anticipate about 1 to 4 inches of liquefaction-induced settlement below the footings. For eastern wing walls the settlement is estimated to range from no settlement near the culvert to about 5 inches at the north and south ends. We do not anticipate significant damage to occur to the proposed structures due to vertical settlement because the magnitudes are small for the west wing walls, and the proposed four-sided box culvert and structural earth walls for the eastern wing walls are suitable to tolerate large differential settlements along their alignments.

4.1.4 Post Liquefaction Residual Shear Strength

Upon initiation of liquefaction, the shear strength of the liquefiable soils will be reduced to a residual shear strength while the excess pore pressure within the soil dissipates. For shorter earthquakes, it is assumed that the fully liquefied state occurs after the majority of the shaking has stopped. The impact of the reduced shear strengths in liquefiable soils is therefore assumed to apply to the static case immediately after the earthquake. For this project, residual shear strengths were estimated using a weighted average of the results of the Tokimatsu and Seed (1987), Seed and Harder (1990), Olson and Stark (2002), Idriss and Boulanger (2007) and Kramer (2008) relationships. The residual shear strengths were assigned as reduced friction

angle materials and are estimated as a function of the equivalent clean sand SPT value, $(N_1)_{60cs}$, the potential for void redistribution, and the initial effective overburden stress. The residual shear strengths were then used to evaluate the potential for liquefaction induced slope failures for the wing walls along the east side of 100th Avenue NE.

4.1.5 Liquefaction Induced Slope Failures

Liquefaction induced slope failures can either occur as lateral spreading or as a flow failure. Liquefaction induced lateral spreading occurs as the shear strength of liquefiable soils decrease during seismic shaking but does not decrease to the point that a complete flow failure would occur. Lateral spreading occurs cyclically when the horizontal ground accelerations combine with gravity to create driving forces which temporarily exceed the available strength of the soil mass. This is a type of failure known as cyclic mobility. The result of a lateral spreading failure is horizontal movement of the liquefied soils and any overlying crust of non-liquefied soils. Displacements associated with lateral spreading are generally quantifiable and on the order of a few to several feet. Lateral spreading is considered likely if the factor of safety of the slope under static loading using the post-liquefaction residual strengths is greater than 1.0.

In contrast, liquefaction induced flow failures result when the residual strength of the liquefied mass is not sufficient to withstand the static stresses that existed before the earthquake. Upon initiation of liquefaction induced flow failure, the liquefied soil behaves like a debris flow, characterized by very large displacements. Flow failures involve horizontal and vertical movements of the liquefied soils and any overlying crust of non-liquefied soils. The chaotic nature of flow failures is such that estimation of the magnitude of displacement is not reasonable. Flow sliding is likely if the stability (factor of safety) of the slope under static loading, using the post-liquefaction residual strengths, is less than 1.0. Slope stability analyses performed for the 100th Avenue NE embankment and proposed walls include consideration for liquefaction induced slope stability, which are presented in the following section.

4.2 SLOPE STABILITY EVALUATIONS

HWA performed global slope stability analyses for both the existing embankment slopes as well as the proposed wing walls along the eastern side of the corridor to assess whether the proposed wall configurations would satisfy overall stability requirements for design. Analyses for the existing slopes were performed for both the east and west of sides of the 100th Avenue NE corridor near the proposed culvert at cross-section B-B'. The analyses for the proposed eastern wing wall improvements were performed using cross-sections generated for each of the proposed wall footing subgrade elevations shown on the preliminary wingwall alignment. The analyses for the eastern wing walls were performed using cross-sections generated for each of the proposed wall footing subgrade elevations shown on the preliminary wingwall alignment. These locations are identified by wall stationing shown on Sheet S-1, Culvert Plan, Elevation and

Section, provided to HWA on March 9, 2020. The location and orientation of the wall cross-sections evaluated can be seen on Figure 2, the Site and Exploration Plan. These locations are identified by wall stationing shown on Sheet S-1, Culvert Plan, Elevation and Section, provided to HWA on March 9, 2020. The location and orientation of the wall cross-sections evaluated can be seen on Figure 2, the Site and Exploration Plan.

Global slope stability was evaluated using limit equilibrium methods for three scenarios: (1) static loading, (2) pseudo-static earthquake loading, and (3) post-liquefaction static loading. In the static loading case, a uniform traffic live load of 250 pounds per square foot (psf) was applied across the top of the roadway. In the pseudo-static earthquake loading analysis, a constant horizontal acceleration of 0.233 g was applied to the slope and wall. In the post-liquefaction static loading scenario, the slope and wall were considered under static conditions (no horizontal acceleration), but with a reduced shear strength of liquefied sand, modeled as a reduced friction angle, to simulate conditions immediately after the earthquake shaking has stopped. Traffic live load was not included in the pseudo-static and post-liquefaction cases, because these two cases are transient short duration design events.

Limit equilibrium analyses were performed using the computer program SLIDE 8.020 to determine the global factor of safety with respect to potential deep-seated failure surfaces. The factor of safety computed is the ratio of the summation of the driving forces to the summation of the resisting forces. Where the factor of safety is less than 1.0, instability is predicted. For global slope stability design, minimum acceptable factors of safety under static loading conditions are commonly taken as 1.3 for slopes supporting structures or walls. For slopes adjacent to structures or minor walls where slope instability would have a lesser effect in terms of safety considerations, the factor of safety may be taken as 1.3. Minimum acceptable factors of safety for the pseudo-static and post-liquefaction static cases are 1.1. The results of each analysis for the wall locations.

4.2.1 Global Stability for Existing Slopes

The results of the slope stability analyses for the existing slopes at cross-section B-B' are provided in Appendix E on Figures E-1 through E-6. Each of the slope geometries were stable under the static loading condition with factors of safety greater than 1.3. Under pseudo-static earthquake loading, the factors of safety were greater than 1.1 for the western slope; however, the eastern slope was found to have factors of safety less than 0.9 under pseudo-static loading. Similarly, for the post liquefaction loading conditions, the analyses indicate factors of safety greater than 1.1 for the western slope and less than 0.9 for the post liquefaction condition. Therefore, in its current state, the east side of the embankment is expected to experience slope instability due to seismic shaking and liquefaction-induced flow failure under the design seismic event. It should be noted that the proposed culvert will stabilize the embankment at the east end;

however, the slopes to the north and south are expected to experience instability during and following a large seismic event in their current configuration.

4.2.2 Global Stability for Proposed Eastern Wing Walls

The results of the global stability analyses for static conditions for the proposed Eastern Wing Walls are provided in Appendix F on Figures F-1 though F-7 The geometry of the walls was evaluated to determine if the length of the geogrid reinforcement in the eastern wing walls would impact global stability. The length of the geogrid was taken to be a percentage of the wall height, such that H was equal to the total retained height, measured from the top of the leveling pad to the top of the wall. For global stability under static conditions, it was determined that global stability would be satisfied for geogrid lengths of 0.8*H or more for all tiers of the eastern walls. However, it was determined that extending the length of the geogrid did not significantly increase the global slope stability for the pseudo-static or post-liquefaction case. The results of the pseudo-static and post-liquefaction cases without improvement for selected wall tiers are provided on Figures 5A through 5F and Figures 6A through 6F, respectively. For all walls with foundation levels above the base of the liquefiable alluvial soils, factors of safety were less than 1.1. Stability was satisfied if a portion of the liquefiable soils were removed and replaced with high shear strength materials. Mitigation methods for the various sections of the walls are discussed in Sections 4.6.8 and 4.6.9.

4.3 CULVERT FOUNDATION DESIGN

4.3.1 Foundation Bearing Capacity

The base of the culvert can be founded on the existing recessional and advance outwash soils encountered in our borings near the proposed bottom of culvert, which will be 20 to 25 feet below the existing roadway surface. Because the weight of soil displaced by the proposed box culvert will exceed the weight of the new culvert, the construction of a four-sided box culvert will result in a reduction in pressures acting on the soils below the structure. Therefore, the subsurface soils will provide adequate foundation bearing support for the culvert, assuming the foundation subgrade preparation recommendations in Section 4.3.3 are followed. For the culvert, foundations bearing on a properly prepared subgrade can be designed for an ultimate bearing capacity of 9,000 psf for the Strength and Extreme Limit States. For the Service Limit State, a net bearing capacity of up to 4,000 psf can be used for a settlement criterion of not more than one inch.

For LRFD design methods, the resistance factor (ϕ) to be applied to the ultimate bearing capacity for the Strength Limit State is 0.45. For Extreme Limit States, a resistance factor of 1.0 should be applied to the ultimate bearing capacity. For the Service Limit State, a resistance factor of 1.0 should be applied to the bearing capacity for settlement of not more than one inch.

4.3.2 Lateral Earth Pressures on Culvert Walls

Where retaining walls are constrained against rotation, the lateral pressures should be computed assuming at-rest earth pressures. A cut and cover, four-sided box culvert would be constrained against rotation. Design earth pressures for the walls of the culvert are provided on Figure 7. The height of the gravel providing passive resistance within the box culvert should be designed based on the maximum anticipated scour depth determined by the culvert engineer and stream designer. For sliding, lateral earth pressures will be resisted by equal and opposite loading on the far side of the culvert.

4.3.3 Culvert Subgrade Preparation

Foundation excavations for the culvert should be prepared by excavating with a backhoe or excavator employing a smooth edge (toothless) bucket to limit soil disturbance. All unsuitable soils should be removed from beneath the culvert. Loose or soft soil, as identified by the geotechnical representative, should be removed and replaced with Structural Backfill in accordance with Section 4.7 or be suitably compacted native material. We recommend an HWA geotechnical engineer, or their representative, be present during construction to verify the assumptions made for the culvert foundation are met.

A foundation pad consisting of crushed rock backfill should be placed over the subgrade as a leveling course for support of the culvert. This leveling course should be at least 12 inches thick and should consist of materials meeting the requirements for Crushed Surfacing Base Course, as described in Section 9-03.9(3) of the *Standard Specifications* (WSDOT, 2020). It should be compacted to a dense condition, and to at least 95 percent of its Modified Proctor maximum density (ASTM D 1557).

4.3.4 Utility Protection or Relocation during Construction

Excavation and construction of the replacement culvert and the associated wing walls must be performed in a manner which will not adversely impact existing utilities. It is our understanding that the excavation contractor has proposed to maintain existing utility lines and suspend them above the proposed excavation during the duration of the culvert placement. The design should identify utilities that are within the limits of the proposed excavation and determine if they will need additional protection during construction. For utility protection, the Contractor should verify the depth and location of any existing utility lines within their proposed extents of excavation prior to beginning excavation. Each of the existing utilities is likely to be backfilled with trench backfill that is more permeable than the native soils. These zones of existing trench backfill can act as conduits for flow of near surface perched water. Prospective contractors should anticipate encountering free water from existing utilities and trench backfill intercepted by the proposed trench excavation. The contractor should be prepared to collect, divert, and

remove intercepted water to suitable discharge locations in accordance with local guidelines. If utilities are anticipated to remain in place below the excavation, adequate separation between the proposed base of the excavation should be maintained. We would consider a suitable depth of cover to be about 4 to 5 feet; although this depth should be reviewed and considered adequate by the corresponding utility companies.

4.4 TEMPORARY EXCAVATION AND SHORING RECOMMENDATIONS

We anticipate that the culvert and associated wing walls will be installed by cutting temporary excavation slopes into the existing roadway through a complete closure of the road. Maintenance of safe working conditions, including temporary excavation stability, is the responsibility of the contractor. All temporary excavations more than 4 feet in depth must be sloped in accordance with Part N of WAC (Washington Administrative Code) 296-155 or be shored. The materials to be encountered will classify as Type C soil, for which WAC requires that unsupported excavation must be inclined no steeper than 1.5H:1V. This assumes that adequate dewatering has been provided to maintain stable slopes during excavation. Flatter slopes may be necessary where near surface runoff impacts the stability of the temporary slopes. The slopes should be monitored, and slope angles adjusted in the field based on local subsurface conditions and the contractor's methods.

We do not anticipate the requirement for temporary shoring during the construction of the proposed improvements. If a partial closure will be used instead of a full road closure, temporary shoring will be required to retain the soil supporting the portion of the road kept in service. If temporary shoring is utilized, we recommend the usage of a temporary sheet-pile shoring system with internal stabilizing features or a watertight cofferdam. Recommended design pressures for temporary braced shoring system will be provided if this system is determined to be necessary. Temporary shoring systems should be designed to resist the earth pressures provided, including any surcharge pressures from equipment or trench spoils located within a 1:1 slope extending upward from the toe of the trench.

The design, installation, maintenance and removal of temporary shoring should be the responsibility of the contractor. The shoring system should be designed by a qualified and licensed engineer experienced with shoring design for deep excavations within similar soil conditions. We recommend that the design of the temporary shoring system be submitted by the contractor, for approval, prior to starting excavation. HWA should be allowed to review shop drawings and calculations for proposed shoring systems to check for consistency with the recommendations included in this report.

To limit dewatering, we recommend that the temporary shoring extend into the advance outwash soils a sufficient depth to cut off near surface water from flowing under the sheets. The density of the advance outwash soils is such that sheet pile penetration into these soils will be difficult to

achieve. If sheet piles are used and penetration into the advance outwash soils is required, predrilling may be required to advance the sheets to the desired depth.

4.5 GROUND WATER CONTROL

The contractor should be responsible for control of ground and surface water. Construction of the culvert should be performed in suitably dry conditions. During construction, the existing flow of Cedar Creek is anticipated to be diverted during the duration of construction in support of reducing the groundwater table in the project vicinity.

We expect that construction of the proposed culverts will require excavations below the groundwater levels observed in the explorations at the site. To maintain stability of the sloped excavations, we recommend that the water table be drawn down below the base of the excavation. Based on the encountered groundwater table within our explorations and the depth of the excavation for the proposed culvert, we anticipate the cut will extend approximately 10 feet below the depth of groundwater table. We anticipate that water levels encountered at the time of excavation may be different than shown on the boring logs and will fluctuate with time of year, local rainfall and other factors. We anticipate dewatering may be accomplished using localized sumps and pumps or other common/conventional dewatering methods. The dewatering system should be designed by a qualified engineer or contractor experienced with the local dewatering characteristics and types of proposed construction for this project. Surface water should be diverted away from the excavation. Water should be diverted, collected and discharged at a suitable location. We expect that preventing the water from Juanita Creek entering the excavation will be key to development and implementation of a cost effective dewatering system. We recommend that excavations be performed during the dry summer months to minimize ground water seepage in excavations.

If additional minor excavations below the water table are anticipated, dewatering may be possible in combination with the creek diversion and use of sumps and pumps.

Lowering the ground water below the current elevations for significant periods could cause settlement of the loose silty and sandy soils that underlie the site. The magnitude of the settlement and its areal extent would depend on the amount of change in the water level from existing conditions, the length of time the water level was lowered, and the compressibility and thickness of the underlying soils. As there are no significant structures within a direct proximity with the proposed excavation, the impacts of settlement will likely be minimal; however, settlement of the culvert and any associated structures and the residential developments to the north and south of the creek should be monitored to evaluate the effects the dewatering may have.

4.6 RETAINING WALL RECOMMENDATIONS

4.6.1 Retaining Walls for West Wing Walls

Based on the provided culvert plan sets, we understand that the walls on the west side of the culvert will consist of either a Structural Earth Wall (SEW) system or a pre-cast or cast-in-place system. SEWs have the advantage of tolerating deformation due to liquefaction settlement or horizontal movement; however, based on the elevation of the proposed walls, these impacts are expected to be minimal. A pre-cast or cast-in-place wall could be used, but should be able to tolerate one to two inches of settlement due to liquefaction. Recommendations for pre-cast or cast-in-place walls are provided in Section 4.6.3 and recommendations for SEWs are provided in Section 4.6.4 and 4.6.5.

4.6.2 Retaining Walls for East Wing Walls

The eastern side of the roadway embankment will be supported using SEWs constructed at the east end of the culvert. It is our understanding that design provides wall construction for the widening of 100th Avenue NE in this phase, which will require walls with retained heights of up to 22 feet. Recommendations for these walls are provided in Sections 4.6.4, 4.6.5, and 4.6.6.

4.6.3 Pre-Cast or Cast-in-Place Wall Design Parameters

The proposed western wing walls can be designed as pre-cast or cast-in-place (CIP) concrete walls. These walls will be constructed as a fill walls to allow for the proposed widening of the roadway; however, cuts into existing soils will be needed to reach the footing subgrade elevation. The excavation needed to construct the walls will generally be accomplished in conjunction with the excavation for the culvert, reducing the extents of temporary shoring that are required. The Contractor should; however, be prepared to install temporary shoring that may be needed to limit the extension of excavations onto adjacent properties. Temporary cuts and shoring requirements are discussed in Section 4.4.

Lateral Earth Pressures

Design lateral earth pressures for pre-cast or cast-in-place walls assume that the walls are backfilled with properly compacted Structural Fill, as described in Section 4.7. It should be assumed that the pre-cast or CIP walls will be free to deflect by at least 0.001H, where H is the retained height of the wall, to allow active conditions to develop. Using these assumptions, an equivalent fluid pressure of 55 pounds per cubic foot can be assumed for static conditions. Under earthquake loading conditions, the retaining wall is anticipated to yield an adequate amount to allow development of active conditions. The evaluation of the active pressures experienced during a seismic event can be approximated using the Mononobe-Okabe method utilizing 0.5 times the PGA for the site that yields 0.233 g. For design purposes, a design active-

plus-seismic equivalent fluid pressure of 105 pounds per cubic foot may be assumed. These earth pressures assume no accumulation of water behind the wall. Proper wall drainage per Section 4.6.10 of this report should be constructed to ensure that hydrostatic pressures do not develop behind the wall structure.

Ultimate passive static pressure (unfactored) equal to an equivalent fluid pressure of 520 pounds per cubic foot may be considered for cast-in-place walls with slopes in front of the wall no steeper than 4H:1V. We recommend the upper 2 feet of passive pressure below the anticipated scour depth be neglected. Under earthquake loading conditions, a design passive-plus-seismic equivalent fluid pressure of 450 pounds per cubic foot may be assumed.

Wind, earthquakes, and unbalanced earth loads may be resisted by frictional forces between the native or structural fill and mass concrete equal to 50 percent of the normal force (a frictional coefficient of 0.5).

The lateral active, active-plus-seismic, and passive pressures and friction coefficient are ultimate values. HWA recommends a factor of safety of 1.5 for static and 1.1 for pseudo-static design to be used for wall design.

Bearing Capacity

Based the results of boring BH-1-19 and a proposed west wall footing foundation Elevation of 174 feet, we anticipate that the walls will bear on dense advance outwash soils and can be designed for an ultimate bearing capacity of 9,000 pounds per square foot (psf) to resist overturning moments. If the wing walls are anticipated to be placed above elevation 174 feet in which the pre-cast or CIP wall foundations are expected to bear on native alluvium or recessional outwash deposits, we recommend using an ultimate bearing capacity of 5,500 pounds per square foot (psf) to resist overturning moments. These bearing capacities should be used with a resistance factor of 0.45 for the Strength I Limit State and 1.0 for the Extreme Event I Limit State.

Embedment Depth

For sections of the pre-cast or CIP walls, a minimum embedment of 24 inches should be assumed. We recommend that wall footings be placed on a 1-foot-thick leveling pad consisting of Crushed Surfacing Base Course per Section 9-03.9(3) of the WSDOT *Standard Specifications* (WSDOT, 2020). The leveling pad material should be compacted to at least 95 percent of Modified Proctor maximum dry density, as determined by ASTM D 1557. This leveling pad should be at least 12 inches wider than the footing perimeter in all directions and graded to establish the proper wall batter.

4.6.4 SEW Wall Design

The Contractor may elect to construct the west wing walls as Structural Earth Walls rather than pre-cast or cast-in-place walls. The wing walls along the east side of the alignment are recommended as SEWs. The SEWs along the east side of the ROW will have retained heights of up to 22 feet. SEWs will consist of a proprietary wall system that the wall supplier will design for internal stability. The walls should be designed in accordance with the AASHTO *LRFD Bridge Design Specifications* (AASHTO, 2017) and Section 6-13.3(2)A of the 2020 *WSDOT Standard Specifications*. For the Extreme Event I Limit State, as specified in Section 6-4.3.2 of the *Geotechnical Design Manual* (WSDOT, 2019), the walls should be designed for a horizontal seismic acceleration coefficient, k_h of one-half the peak ground acceleration (A_s) or 0.233 g and a vertical seismic acceleration coefficient k_v of 0.0g (assuming the wall is free to move during a seismic event). Extreme Event I Limit State is defined in the AASHTO *LRFD Bridge Design Specifications* as a safety check involving an extreme load event resulting from an earthquake in combination with the dead load and a fraction of the live loads.

Walls needed to support the future roadway for the culvert will be constructed at both the base of the existing embankment and within the proposed slope embankment. Walls founded at the base of the slope will be founded on the dense outwash materials suitable to provide high bearing capacities. Walls founded within the embankment will bear on sloping ground, which reduces the available bearing capacity for support of the walls. We therefore present wall design recommendations for two wall cases including (1) for walls founded at the base of the slopes and (2) for walls founded within the sides of the roadway embankment. The first case applies to the western wing walls and the center section of the eastern wing wall, which runs from Wall STA 10+52 to 10+85. The second case applies to the north and south ends of the east wall from STA 10+00 to 10+52 and from STA 10+85 to 11+14.

4.6.5 SEW Design Parameters for West Wall and East Wall STA 10+52 to 10+85

The proposed west wing wall and eastern wing wall founded at the base of the slope between approximate STA 10+52 and 10+85 should be designed using the parameters provided in Table 2. These walls are assumed to bear directly on dense outwash soils or compacted structural fill placed directly on top of dense outwash soils.

Embedment depths for these walls should consider potential for scour. We recommend that these walls be embedded at least 2 feet below the anticipated scour depth in front of the wall.

A coefficient of friction of 0.5 times the effective stress at the base of the wall can be used for sliding resistance.

Table 2. Recommended SEW Design Parameters for West Walls and East Walls from STA 10+52 to 10+85

Soil Properties	Wall Backfill*	Retained Soil*	Foundation Soil
Unit Weight (pcf)	135	135	130
Friction Angle (deg)	36	36	34
Cohesion (psf)	0	0	0
		AASHTO Load Group 1	**AASHTO Load Group 2**
Ultimate Bearing Capacity (psf)		9,000	9,000
Resistance Factors (φ)		0.65	1.0
Horizontal Seismic Acceleration Coefficient (k_h) (g)		N/A	0.233

* Gravel Borrow for Structural Earth Walls, as specified in Section 9-03.14(4).

4.6.6 SEW Design Parameters for East Walls STA 10+00 to 10+52 and 10+85 to 11+14

The proposed eastern wing walls founded within the slope between Wall STA 10+00 to 10+52 and 10+85 to 11+14 should be designed using the parameters provided in Table 3. These walls are assumed to bear on properly prepared leveling pads within the slope embankments.

We recommend that these walls be embedded at least 2 feet below the finished grade in front of the wall. The slope in front of the walls should be no steeper than 2H:1V.

A coefficient of friction of 0.5 times the effective stress at the base of the wall can be used for sliding resistance.

Table 3. Recommended SEW Design Parameters for East Walls from STA 10+00 to 10+52 and 10+85 to 11+14

Soil Properties	Wall Backfill*	Retained Soil*	Foundation Soil
Unit Weight (pcf)	135	135	130
Friction Angle (deg)	36	36	34
Cohesion (psf)	0	0	0
		AASHTO Load Group 1	**AASHTO Load Group 2**
Ultimate Bearing Capacity (psf)		4,000	4,000
Resistance Factors (φ)		0.65	1.0
Horizontal Seismic Acceleration Coefficient (k_h) (g)		N/A	0.233

* Gravel Borrow for Structural Earth Walls, as specified in Section 9-03.14(4).

4.6.7 Mitigation for Global Instability for East Wall from STA 10+52 to 11+00

The eastern walls from Wall STA 10+52 to 11+00 generally have subgrade elevations within about 2 to 5 feet above the base of loose to medium dense fill and alluvial layers. For these walls, removal of the lower strength soils is important for both pseudo-static and post-liquefaction stability. For the wall section from Wall STA 10+52 to 11+00, we recommend excavating to Elevation 172 feet to expose dense outwash soils that are not susceptiable to liquefaction. The leveling pad can then be constructed using Crushed Surfacing Base Course per Section 9-03.9(3) of the WSDOT *Standard Specifications* and following the recommendations for placement and compaction of Structural Fill provided in Section 4.7. Slope stability analyses, as provided on Figures 8A and 8B, show that over-excavation of the fill and alluvial soils below the wall in this section will be adequate to provide stability of the slope during the design seismic event.

4.6.8 Mitigation for Global Instability for East Wall from STA 10+00 to 10+52

The depth to the base of loose to medium dense fill and alluvial layers increases for the south end of the eastern wall (from about Wall STA 10+00 to 10+52). The associated global stability analyses indicate that the presence of loose to medium dense fill and alluvial soils within the eastern embankment will lead to slope instability during earthquake shaking. These soils are also susceptible to liquefaction and slope instability is also anticipated after the earthquake when the liquefied soils reach their residual shear strength. Where the factors of safety using the residual soil strengths during the post-liquefaction condition are less than 1.0, it indicates that chaotic slope failures are likely to occur such that estimation of the magnitude of displacement is not reasonable.

Based on these results, we conclude that the potential slope instability could result in movement of the road embankment wall that would extend a significant distance into the 100th Avenue NE right-of-way. From this, we also conclude that mitigating for the potential slope instability should be considered to protect the life safety along the proposed wall alignment. This can be achieved by removing the liquefiable soils from below the base of the wall; however, as the elevation of the base of the eastern wall increases to the south, the over-excxavation depths required to remove liquefiable materials below the base of the wall become considerably deeper, increasing to about 15 feet at the south end of the wall, making over-excavation costly and more challening to construct. However, installation of a trench of higher strength soils could be installed at the base of the slope in front of the wall, where the depth to dense outwash soils are typically within about 10 feet of the ground surface. Based on our slope evaluations, this would generally increase the pseudo-static stability to around a factor of safety of 1.0 or more, as presented on Figures 9A through 9E. Whereas the slope stability analyses indicate that stability is somewhat less than the required 1.1 for the pseudo-static condition at the wall for one section from Wall STA 10+10 to 10+30, the proposed SEWs are suitable to tolerate the anticipated

deformations that would occur as a result of ground shaking. The rock filled trench will increase the global stability for the post-liquefaction case to above 1.1, as shown on Figures 10A through 10E and this option mitigates against the large lateral deformations that would be anticipated under the flow failure condition. Details associated with installation of a trench to provide global slope stability are provided in the following sections.

4.6.9 Installation of Rock-Filled Trench for Liquefaction Mitigation

The proposed mitigation for liquefaction would consist of installing an approximately 8-foot wide trench of crushed rock meeting the requirements of Permeable Ballast Section 9-03.9(2)) of the *Standard Specifications* (WSDOT, 2020). The Permeable Ballast must be 100 percent crushed ledge rock (e.g. NO crushed gravel) to provide the strength necessary to for stability. The approximate location would be 10 to 15 feet west of the existing sewer alignment at the toe of the slope. This location could be moved further west; however, this would increase the depth of excavation required resulting in increased cost and time for installation. We recommend the base of the trench be Elev. 170 and the top of the rock backfill would be Elev. 185 or the ground surface, whichever is lower.

For installation of the trench, excavation can be accomplished with conventional excavating equipment such as backhoes and excavators. The base of the excavation will be made below the ground water table. Given that loose sand is anticipated to be located below the ground water table, there is a high potential for caving and flowing sands within the excavation. These conditions will require excavation in a wet bottomed trench (below the ground water table) or dewatering. Lateral support for the trench walls should be provided by the contractor to prevent loss of ground and possible distress to the roads, utilities, and adjacent structures. General recommendations for design and implementation of shoring and bracing systems are presented below.

- Shoring should be designed and constructed to support lateral loads exerted by the soil mass and hydrostatic pressure. In addition, any surcharge from construction equipment, construction materials, excavated soils, or vehicular traffic on adjacent roadways should be included in the shoring design. We recommend that the contractor be required to submit a shoring/excavation plan for review prior to construction. The plan should be required to contain specific measures for temporary support and protection of all existing utilities and structures.
- Precautions should be taken during removal of the shoring to minimize disturbance of the permeable ballast trench and existing soils.
- The contractor should be responsible for control of ground and surface water and should employ sloping, slope protection, shoring, sumps, dewatering, and other measures as necessary to prevent sloughing of soils.

4.6.10 General Wall Drainage

Drainage should be provided behind all walls and should consist of 6-inch diameter, perforated, rigid plastic pipes, bedded and backfilled with Gravel Backfill for Drains, as specified in Section 9-03.12(4) of the *Standard Specifications* (WSDOT, 2020). The pipes should slope to drain to a suitable outlet.

4.6.11 Backfill Wall Benching

Where fill is placed against existing side slopes, horizontal benches should be cut to facilitate compaction of the new wall backfill. Horizontal benches should be at least 5 feet wide or the width of the compaction equipment, whichever is wider. Fill against an existing slope will require benched cuts as outlined in Section 2-03.3(14) of the WSDOT *Standard Specifications* (WSDOT, 2020), Embankment Construction. All embankment benching should comply with OSHA temporary cut slope requirements discussed in Section 4.4.

4.6.12 Wall Subgrade Preparation

Subgrade preparation is important to limit differential settlement of walls and maintain global stability. All unsuitable soils should be removed from beneath the entire footprint of the wall, including the entire reinforced zone for SEWs. Loose or soft soil, as identified by the geotechnical representative, should be removed and replaced with Structural Backfill in accordance with Section 4.7 or be suitably compacted native material.

We recommend an HWA geotechnical engineer, or their representative, be present during construction to verify the assumptions made for the foundations of the walls are met. The depth and extent of excavation will be directed by the geotechnical engineer on site.

A leveling pad consisting of crushed rock backfill should be placed over the subgrade as a leveling course for support of the walls. This leveling course should be at least 12 inches thick and should consist of materials meeting the requirements for Crushed Surfacing Base Course, as described in Section 9-03.9(3) of the *Standard Specifications* (WSDOT, 2020). It should be compacted to a dense condition and determined by HWA, or to at least 95 percent of its Modified Proctor maximum density (ASTM D 1557).

4.6.13 Stormwater Pipe Penetration of Wall

A proposed stormwater pipe to be installed will be constructed perpendicular to the eastern wall south of the culvert. The pipe will consist of an 18-inch diameter section of corrugated polyethylene pipe that will daylight in front of the wall about 20 feet. Where a pipe penetrates through the wall face, a concrete cast-in-place collar should be constructed around the pipe. The

cast-in-place collar should be installed in such a manner that there are no void spaces between the blocks and the outside edges of the collar.

4.6.14 Pipe Bedding

Pipe bedding should be placed around the stormwater pipe. For pipe bedding, the material, placement, compaction, and shaping should be in accordance with the project specifications and the pipe manufacturer's recommendations. In general, pipe bedding should meet the gradation requirements of Section 9 03.12(3) for Gravel Backfill for Pipe Zone Bedding of the Standard Specifications (WSDOT, 2020) and have a minimum cover around the pipe of 6 inches. Pipe bedding should provide a firm uniform cradle for support of the pipes. The pipe bedding should be shaped to fit the lower part of the pipe exterior with reasonable closeness to provide uniform support along the pipe.

The Gravel Backfill for Pipe Zone Bedding should be surrounded by a geotextile separator fabric at the interface between the backfill and the pipe bedding material. The geotextile should meet the requirements of Section 9-33.1 Construction Geotextile Table 3, of the *Standard Specifications* (WSDOT, 2020) for separation and should be non-woven.

4.7 STRUCTURAL FILL MATERIALS, PLACEMENT AND COMPACTION

Materials used as backfill for the walls and culvert are considered "Structural Fill". The backfill below the proposed roadway section and behind walls should consist of Gravel Borrow, as described in Section 9-03.14(1) or Gravel Backfill for Walls, as described in Section 9-03.12(2) of the *Standard Specifications,* (WSDOT. 2020). Backfill within the reinforced zone of SEWs should consist of Gravel Borrow for Structural Earth Walls, as described in Section 9-03.14(4) of the *Standard Specifications* (WSDOT, 2020).

In order to minimize subsequent settlement of the excavation backfill and new pavements, we recommended that backfill soils be placed in loose, lifts no thicker than 8 inches and each lift should be compacted to at least 95 percent of its Modified Proctor maximum density (ASTM D 1557). The procedure to achieve proper density of compacted fill depends on the size and type of compaction equipment, the number of passes, thickness of the layer being compacted, and soil moisture-density properties.

4.8 ANCHOR ELEMENTS FOR LARGE WOODY DEBRIS

We understand that large woody debris (LWD) will be placed within the channel to promote the formation of pools and encourage fish habitat. These LWD will need to be stabilized in order to prevent downstream migration. Due to the presence of loose/soft fill and alluvial soils extending

up to 10 feet below ground surface, we recommend using anchors (such as Manta-Ray anchors) to anchor the LWD in place.

Soil anchors are a suitable method to provide stability for the proposed LWD. Manta Ray anchors are one type of soil anchor that can be installed with small equipment in limited access areas and do not require grout to provide resistance. These anchors consist of a driven pile element with a tipping plate attached to the end of a drive steel rod advanced with a pneumatic jackhammer. After driving the anchor to the required depth, the anchor is pulled to rotate the anchor plate, and proof tested. This produces an anchor for pullout that is dependent on the soil strength for reaction to tensile loading.

We recommend using Manta Ray anchors for the project, or an approved equivalent. Manta-Ray anchors range in a variety of sizes dependent on the pullout resistance required for the project. Manta Ray anchors appropriate for this application include models MR-4, MR-88, or MR-68.

To provide adequate loading capacity, the plates of the Manta-Ray anchors must penetrate all of the existing fill and alluvium and be embedded into the underlying dense to very dense advance outwash sands. We anticipate that the anchors will develop sufficient pullout capacity within 5 feet of penetration into the advance outwash sand (approximate anchor lengths of 15 to 20 feet). We anticipate an ultimate pullout capacity of 8 kips for the MR-4, 5 kips for the MR-88, and 3 kips for the MR-68. Specific anchor capacities differ depending on the model used and should be verified based on the manufacturer's recommended values. We anticipate anchor embedment lengths of about 15 to 20 feet will be required; however, as the embedment lengths are dependent on the depth in which practical refusal is met, lengths could vary considerably from this estimate based on encountered subsurface soils. We recommend a preliminary center to center anchor spacing of 6 foot or less.

We should be contacted to review the proposed anchor and installation equipment. A geotechnical engineer should be on site during pile driving for all of the Manta-Ray anchors. As each anchor is individually proof tested, additional load testing is not required to verify pullout capacity.

There is a possibility that gravel, cobbles, or other obstructions exist in the surficial fill soils or the underlying advance outwash soils. If an obstruction is encountered within 15 feet bgs that cannot be penetrated, the anchor should either be removed or abandoned in place and a new anchor, or possibly multiple new anchors, should be installed near the anchor that encountered an obstruction. The direction of anchor movement and number of anchors to replace an obstructed one should be determined by the designer and confirmed by HWA.

4.9 SCOUR RESISTANCE USING WOODY TOE PROTECTION

The slope to the north of the culvert outlet will be subject to scour and will require installation of a scour resistant system in order to protect the stability of the slope. In our opinion, the use of Woody Toe Protection (WTP), as shown on the 60 percent plans, would provide suitable resistance to scour, provided sufficient soil cover is provided for the wood. WTP is a streambank protection technique used to mitigate erosion on a cut bank using natural materials. WTP is installed by excavating into the streambank, placing the logs with root balls extending into the stream channel and replacing the soil to cover the logs. The soil backfilled around the logs provides resistance to lateral loading imposed on the root balls due to flow within the stream. Usage of WTP provides a natural appearance and bank stabilization until vegetation on the streambank is established. The WTP will eventually deteriorate leaving a stabilized bank with suitable natural erosion protection. Design for the slope protection should account for the maximum flow for which WTP can resist erosion. If flow rates are determined to exceed the limit that the installation of WTP can resist, incorporation of stream sediment can be used in conjunction with WTP to provide adequate scour resistance with the benefits of a WTP system.

4.9.1 Design Earth Pressures for Woody Toe Protection

Due to the extension of the root ball and trunk into the stream, forces from the flow of the stream flow will be resisted by the soils in which the logs are buried. Lateral soil resistance for logs placed in excavations that are then backfilled with suitable backfill materials are illustrated on Figure 11. The passive pressures provided are ultimate and should be multiplied by a factor of safety of 1.5. Alternatively, logs installed in the excavations can be secured using Manta-Ray anchors (see Section 4.8) if the embedded length required of the logs required to provide adequate stability are too large. We estimate that the natural angle of repose for these creek bank slopes is about 3H:1V. Therefore, log embedment lengths should be computed based on 3H:1V slopes.

4.9.2 Temporary Excavations of Existing Streambank for Woody Toe Protection

Maintenance of safe working conditions, including temporary excavation stability, is the responsibility of the contractor. All temporary excavations more than 4 feet in depth must be sloped in accordance with Part N of WAC (Washington Administrative Code) 296-155 or be shored. The fill, alluvial and outwash materials to be encountered will classify as Type C soil, for which WAC requires that unsupported excavation must be inclined no steeper than 1.5H:1V. Flatter slopes may be necessary where groundwater is present. The slopes should be monitored, and slope angles adjusted in the field based on local subsurface conditions and the contractor's methods.

4.9.3 Dewatering for Woody Toe Protection

Although Cedar Creek will be diverted, it is anticipated that some of the excavations for the woody toe protection will extend below the local ground water table during construction and some level of additional water management will be required. The Contractor's methods for installation of the logs will impact the amount of dewatering needed as well as the types of soils that will be suitable to place as backfill. The logs could be installed in wet excavations; however, this will require the use of imported sand and gravel materials for backfill of the excavations, and on-site soils would not be suitable for reuse. If dewatering to lower the ground water table is done, it is likely that more of the on-site materials would be suitable for reuse, provided the soils are adequately dried to allow compaction.

The Contractor should be aware that dewatering using sumps and pumps is likely to be difficult and could create flowing soil conditions in the base of the excavations, due to the seepage forces in the soils. The Contractor should be responsible for designing and installing deeper dewatering wells in these circumstances if they choose more intensive water management methods.

4.9.4 Reuse of Materials in Excavations for Woody Toe Protection

Soils excavated for the woody toe protection logs will likely consist of silty sand and sandy silt. These soils will be difficult to compact when not at their optimum moisture content. Where these soils are encountered below the ground water table at the site, they are likely to be too wet for compaction. Native alluvial soils could be dried to their optimum moisture content and replaced in the excavations for the woody toe protection, provided they are compacted to at least 90 percent of their maximum dry density, as determined from ASTM D 1557 (Modified Proctor). We recommend the geotechnical engineer evaluate the excavated soils during construction to determine their suitability as backfill material.

4.9.5 Additional Backfill for Woody Toe Projection Slopes

For additional backfill we recommend importing clean sand and gravel as specified in Section 9-03.11(1) Streambed Sediment of the *Standard Specifications* (WSDOT, 2020), and 4- or 6-inch and smaller clean gravel and cobbles as specified in 9-03.11(2) Streambed Cobbles (4 inch or 6 inch Cobbles) of the *Standard Specifications* (WSDOT, 2020). All mixes are suitable for backfilling; however, the 4 inch and 6-inch cobble mix would be better suited for backfilling excavations filled with water. All backfill should be placed in 1-1/2 ft loose lifts and compacted by thoroughly tamping the entire surface with the excavator bucket or Hoe-Pac.

WET WEATHER EARTHWORK

4.10 General recommendations relative to earthwork performed in wet weather or in wet conditions are presented below. These recommendations should be incorporated into the contract specifications.

- Earthwork should be performed in small areas to minimize exposure to wet weather. Excavation of unsuitable and/or softened soil should be followed promptly by placement and compaction of clean structural fill. The size and type of construction equipment used may need to be limited to prevent soil disturbance. Under some circumstances, it may be necessary to excavate soils with a backhoe to minimize subgrade disturbance caused by equipment traffic.

- Material used as excavation backfill in wet weather should consist of clean granular soil with less than 5 percent passing the U.S. No. 200 sieve, based on wet sieving the fraction passing the ¾-inch sieve. The fines should be non-plastic. It should be noted this is an additional restriction on the structural fill materials specified.

- The ground surface within the construction area should be graded to promote surface water run-off and to prevent ponding.

- Within the construction area, the ground surface should be sealed on completion of each shift by a smooth drum vibratory roller, or equivalent, and under no circumstances should soil be left uncompacted and exposed to moisture infiltration.

- Excavation and placement of backfill materials should be monitored by a geotechnical engineer experienced in wet weather earthwork to determine that the work is being accomplished in accordance with the project specifications and the recommendations contained herein.

5. CONDITIONS AND LIMITATIONS

We have prepared this geotechnical report as part of feasibility studies for Stantec and the City of Kirkland. Additional geotechnical studies may be necessary for final design. Experience has shown that soil and ground water conditions can vary significantly over small distances. Inconsistent conditions can occur between explorations and may not be detected by a geotechnical study. If, during future site operations, subsurface conditions are encountered which vary appreciably from those described herein, HWA should be notified for review of the recommendations of this report, and revision of such if necessary.

We recommend that HWA be retained to review the plans and specifications and to monitor the geotechnical aspects of construction, particularly construction dewatering, excavation, subgrade preparation, bedding and backfill placement and compaction.

Within the limitations of scope, schedule and budget, HWA attempted to execute these services in accordance with generally accepted professional principles and practices in the fields of geotechnical engineering and engineering geology in the area at the time the report was prepared. No warranty, express or implied, is made. The scope of our work did not include environmental assessments or evaluations regarding the presence or absence of wetlands or hazardous substances in the soil, surface water, or ground water at this site.

HWA does not practice or consult in the field of safety engineering. We do not direct the contractor's operations, and we cannot be responsible for the safety of personnel other than our own on the site; the safety of others is the responsibility of the contractor. However, the contractor should notify the owner if he considers any of the recommended actions presented herein unsafe.

We appreciate the opportunity to provide geotechnical services on this project. Should you have any questions or comments, or if we may be of further service, please do not hesitate to call.

Sincerely,

HWA GEOSCIENCES INC.

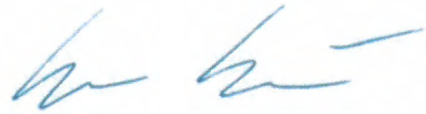

JoLyn Gillie, P.E.
Geotechnical Engineer, Principal

Sean Schlitt, P.E.
Geotechnical Engineer

6. REFERENCE

American Associate of State Highway and Transportation Officials, 2017, *LRFD Bridge Design Specifications*, 8th Edition, Washington D.C.

American Association of State Highway and Transportation Officials, 2011, *AASHTO Guide Specifications for LRFD Seismic Bridge Design*, 2nd edition, American Association of State Highway and Transportation Officials. Washington, DC.

American Society of Civil Engineers (ASCE) 7-16, Minimum Design Loads and Associated Criteria for Buildings and Other Structures.

BridgeLink, 2018, Version 4.0.11.0, http://www.wsdot.wa.gov/eesc/bridge/software

Idriss, I.M, and Boulanger, RW, 2004, *Semi-Empirical Procedures for Evaluating Liquefaction Potential During Earthquakes*, presented at the Joint 11th ISCDEE & 3rd ICEGE, January, 2004.

Idriss, I.M., and Boulanger, R.W., 2006, "Semi-empirical procedures for evaluating liquefaction potential during earthquakes", *Soil Dynamics and Earthquake Engineering*, 11th International Conference on Soil Dynamics and Earthquake Engineering (ICSDEE): Part II, Volume 26, Issues 2–4, February–April 2006, Pages 115–130.

Tokimatsu and Seed (1987), Seed and Harder (1990), Olson and Stark (2002), Idriss and Boulanger (2007) and Kramer (2008) relationships.

Idriss, I. M., and Boulanger, R. W., 2008, *Soil Liquefaction During Earthquakes*, Earthquake Engineering Research Institute (EERI), MNO-12, 226 pp.

Ishihara, K., and Yoshimine, M., 1992. *Evaluation of settlements in sand deposits following liquefaction during earthquakes*. Soils and Foundations, JSSMFE, Vol. 32, No. 1, March, pp. 173-188.

Kramer. S.L. and Wang, C.-H., 2007. *Estimation of the residual strength of liquefied soil, in preparation.*

Minard James., 1983, *Geologic map of the Kirkland Quadrangle*, Washington Department of Natural Resources Division of Geology and Earth Resources, Geologic MapMF-1543, scale 1: 24,000.

Olson, S.M. and Stark, T.D. (2002). *Liquefied strength ratio from liquefaction flow failure case histories*, Canadian Geotechnical Journal, 39(5), 629-647.

Petersen, M.D., Moschetti, M.P., Powers, P.M., Mueller, C.S., Haller, K.M., Frankel, A.D., Zeng, Yuehua, Rezaeian, Sanaz, Harmsen, S.C., Boyd, O.S., Field, Ned, Chen, Rui, Rukstales, K.S., Luco, Nico, Wheeler, R.L., Williams, R.A., and Olsen, A.H., 2014, *Documentation for the 2014 update of the United States national seismic hazard maps*, U.S. Geological Survey Open-File Report 2014–1091, 243 p.

Seed, H.B. and Idriss, I.M., 1971, Simplified Procedure for Evaluating Soil Liquefaction Potential. *Journal of Soil Mechanics Foundation Division*, ASCE, Vol. 97, No. SM9, pp. 1249-1273.

Tokimatsu, K. and Seed, H.B., 1987. *Evaluation of Settlement in Sands Due to Earthquake Shaking*. ASCE Journal of Geotechnical Engineering, Vol. 113, No. 8, August 1987.

WSDOT, 2020, *Geotechnical Design Manual*, Washington State Department of Transportation.

WSDOT, 2019, WSDOT *Bridge Design Manual (LRFD)*, M 23-50.19, July 2019.

WSDOT, 2020, *Standard Specifications for Road, Bridge, and Municipal Construction*, M 41-10, Washington State Department of Transportation.

Youd, T.L., et al., 2001, Liquefaction Resistance of Soils: Summary Report from the 1996 NCEER and 1998 NCEER/NSF Workshops on Evaluation of Liquefaction Resistance of Soils, Journal of Geotechnical and Geoenvironmental Engineering, Geo-Institute of the American Society of Civil Engineers (ASCE), Vol. 127, No. 10, October, 2001.

APPENDIX A

HWA FIELD EXPLORATIONS 2019

RELATIVE DENSITY OR CONSISTENCY VERSUS SPT N-VALUE

COHESIONLESS SOILS			COHESIVE SOILS		
Density	N (blows/ft)	Approximate Relative Density(%)	Consistency	N (blows/ft)	Approximate Undrained Shear Strength (psf)
Very Loose	0 to 4	0 - 15	Very Soft	0 to 2	<250
Loose	4 to 10	15 - 35	Soft	2 to 4	250 - 500
Medium Dense	10 to 30	35 - 65	Medium Stiff	4 to 8	500 - 1000
Dense	30 to 50	65 - 85	Stiff	8 to 15	1000 - 2000
Very Dense	over 50	85 - 100	Very Stiff	15 to 30	2000 - 4000
			Hard	over 30	>4000

USCS SOIL CLASSIFICATION SYSTEM

MAJOR DIVISIONS			GROUP DESCRIPTIONS	
Coarse Grained Soils	Gravel and Gravelly Soils	Clean Gravel (little or no fines)	GW	Well-graded GRAVEL
			GP	Poorly-graded GRAVEL
	More than 50% of Coarse Fraction Retained on No. 4 Sieve	Gravel with Fines (appreciable amount of fines)	GM	Silty GRAVEL
			GC	Clayey GRAVEL
More than 50% Retained on No. 200 Sieve Size	Sand and Sandy Soils	Clean Sand (little or no fines)	SW	Well-graded SAND
			SP	Poorly-graded SAND
	50% or More of Coarse Fraction Passing No. 4 Sieve	Sand with Fines (appreciable amount of fines)	SM	Silty SAND
			SC	Clayey SAND
Fine Grained Soils	Silt and Clay	Liquid Limit Less than 50%	ML	SILT
			CL	Lean CLAY
			OL	Organic SILT/Organic CLAY
50% or More Passing No. 200 Sieve Size	Silt and Clay	Liquid Limit 50% or More	MH	Elastic SILT
			CH	Fat CLAY
			OH	Organic SILT/Organic CLAY
Highly Organic Soils			PT	PEAT

TEST SYMBOLS

%F	Percent Fines
AL	Atterberg Limits: PL = Plastic Limit, LL = Liquid Limit
CBR	California Bearing Ratio
CN	Consolidation
DD	Dry Density (pcf)
DS	Direct Shear
GS	Grain Size Distribution
K	Permeability
MD	Moisture/Density Relationship (Proctor)
MR	Resilient Modulus
PID	Photoionization Device Reading
PP	Pocket Penetrometer Approx. Compressive Strength (tsf)
SG	Specific Gravity
TC	Triaxial Compression
TV	Torvane Approx. Shear Strength (tsf)
UC	Unconfined Compression

SAMPLE TYPE SYMBOLS

- 2.0" OD Split Spoon (SPT) (140 lb. hammer with 30 in. drop)
- Shelby Tube
- 3-1/4" OD Split Spoon with Brass Rings
- Small Bag Sample
- Large Bag (Bulk) Sample
- Core Run
- Non-standard Penetration Test (3.0" OD split spoon)

GROUNDWATER SYMBOLS

- Groundwater Level (measured at time of drilling)
- Groundwater Level (measured in well or open hole after water level stabilized)

COMPONENT DEFINITIONS

COMPONENT	SIZE RANGE
Boulders	Larger than 12 in
Cobbles	3 in to 12 in
Gravel	3 in to No 4 (4.5mm)
Coarse gravel	3 in to 3/4 in
Fine gravel	3/4 in to No 4 (4.5mm)
Sand	No. 4 (4.5 mm) to No. 200 (0.074 mm)
Coarse sand	No. 4 (4.5 mm) to No. 10 (2.0 mm)
Medium sand	No. 10 (2.0 mm) to No. 40 (0.42 mm)
Fine sand	No. 40 (0.42 mm) to No. 200 (0.074 mm)
Silt and Clay	Smaller than No. 200 (0.074mm)

COMPONENT PROPORTIONS

PROPORTION RANGE	DESCRIPTIVE TERMS
< 5%	Clean
5 - 12%	Slightly (Clayey, Silty, Sandy)
12 - 30%	Clayey, Silty, Sandy, Gravelly
30 - 50%	Very (Clayey, Silty, Sandy, Gravelly)
Components are arranged in order of increasing quantities.	

NOTES: Soil classifications presented on exploration logs are based on visual and laboratory observation. Soil descriptions are presented in the following general order:

Density/consistency, color, modifier (if any) GROUP NAME, additions to group name (if any), moisture content. Proportion, gradation, and angularity of constituents, additional comments. (GEOLOGIC INTERPRETATION)

Please refer to the discussion in the report text as well as the exploration logs for a more complete description of subsurface conditions.

MOISTURE CONTENT

DRY	Absence of moisture, dusty, dry to the touch.
MOIST	Damp but no visible water.
WET	Visible free water, usually soil is below water table.

HWA GEOSCIENCES INC.

CEDAR CREEK CULVERT REPLACEMENT
KIRKLAND, WASHINGTON

LEGEND OF TERMS AND SYMBOLS USED ON EXPLORATION LOGS

PROJECT NO.: 2018-152-21 FIGURE: A-1

DRILLING COMPANY: Geologic Drill, Inc.
DRILLING METHOD: Bobcat Drill Rig
SAMPLING METHOD: SPT with Cathead
LOCATION: See Figure 2

DATE STARTED: 3/14/2019
DATE COMPLETED: 3/14/2019
LOGGED BY: S. Schlitt
SURFACE ELEVATION: 186.0 ± feet

DEPTH (feet)	USCS SOIL CLASS	DESCRIPTION	SAMPLE TYPE	SAMPLE NUMBER	PEN. RESISTANCE (blows/6 inches)	OTHER TESTS
0	SP SM	Loose, dark gray, trace gravel, slightly silty SAND, moist. Minor organics. **(FILL)**				
	ML	Soft, dark gray, very sandy SILT, moist. Rootlets observed. **(ALLUVIUM)**		S-1	3-2-4	
5	SM	Very loose to loose, dark gray, very silty SAND, wet.		S-2	2-1-2	
		Becomes gravelly.		S-3	1-2-2	
10	SM	Medium dense, dark gray, gravelly, very silty SAND, wet. No organics. **(RECESSIONAL OUTWASH)**		S-4	3-9-15	GS
	SM	Very dense, dark gray, gravelly, silty SAND, wet. **(ADVANCE OUTWASH)**		S-5	8-19-28	
15		Becomes dark gray-brown. Increasing gravel and silt content.		S-6	18-31-44	GS
	SP SM	Very dense, dark gray, slightly silty, gravelly SAND, wet.		S-7	5-29-50	
20				S-8	22-24-45	
25						

Borehole terminated at 21.5 feet below ground surface (bgs).
Ground water seepage observed at 13 feet bgs upon completion of drilling.
Borehole abandoned with 3/8" bentonite chips.

GROUNDWATER

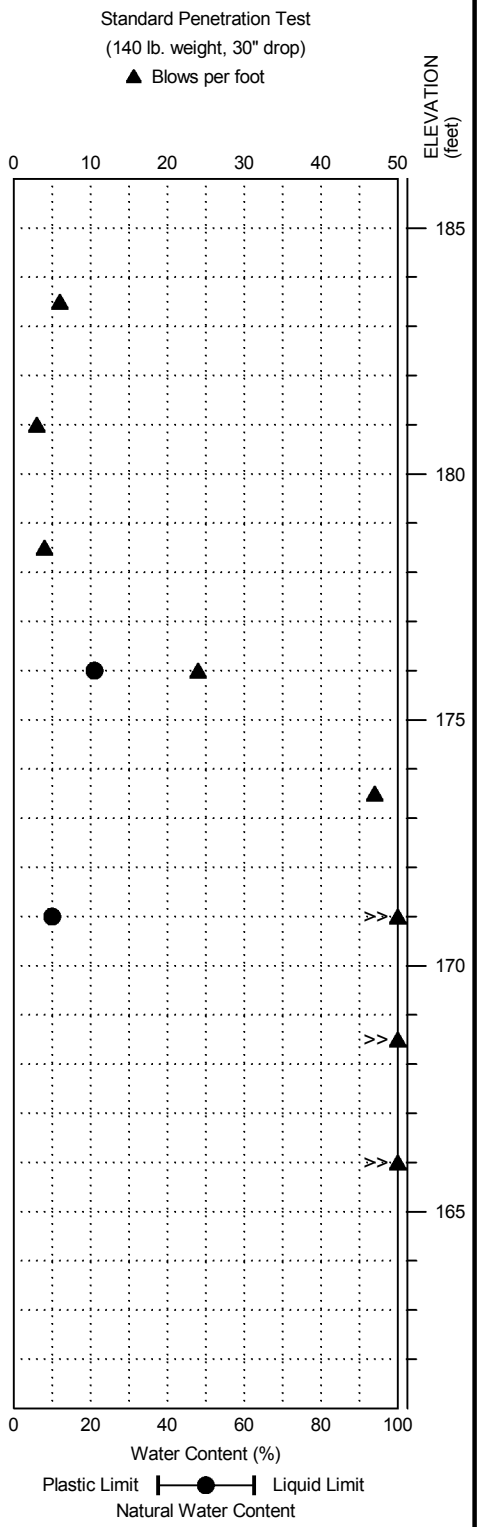

NOTE: This log of subsurface conditions applies only at the specified location and on the date indicated and therefore may not necessarily be indicative of other times and/or locations.

HWA GEOSCIENCES INC.

CEDAR CREEK CULVERT REPLACEMENT
KIRKLAND, WASHINGTON

BORING:
BH-1-19

PROJECT NO.: 2018-152-21 FIGURE: A-2

DRILLING COMPANY: Geologic Drill, Inc.
DRILLING METHOD: Acker Portable Drill Rig
SAMPLING METHOD: SPT with Cathead
LOCATION: See Figure 2

DATE STARTED: 3/14/2019
DATE COMPLETED: 3/14/2019
LOGGED BY: S. Schlitt
SURFACE ELEVATION: 186.0 ± feet

DEPTH (feet)	USCS SOIL CLASS	DESCRIPTION	SAMPLE TYPE / SAMPLE NUMBER	PEN. RESISTANCE (blows/6 inches)	OTHER TESTS
0	ML	Very soft, dark gray, very sandy SILT, wet. Rootlets observed. **(ALLUVIUM)**	S-1	1-1-0	
5	SM	Loose, dark gray-brown, very silty SAND, wet. Trace gravel. No organics.	S-2	1-1-0	
	SM	Driller noted significant drill action due to gravel at 8 feet bgs. Medium dense, dark gray-brown, gravelly, very silty SAND, wet. **(RECESSIONAL OUTWASH)**	S-3	2-7-16	GS
10	SP SM	Medium dense, gray, slightly silty SAND, wet. Trace gravel.	S-4	6-7-14	
	SP SM	Dense to very dense, gray, slightly silty SAND, wet. Trace to no gravel. Minor rust mottling observed. **(ADVANCE OUTWASH)**	S-5	7-18-24	GS
15		Becomes more gravelly. Driller could not advance auger beyond 15.5 feet.	S-6	50/6"	
20					
25					

Borehole refusal at 16.5 feet below ground surface (bgs).
Ground water seepage observed at 6 inches bgs upon completion of drilling.
Borehole abandoned with 3/8" bentonite chips.

GROUNDWATER

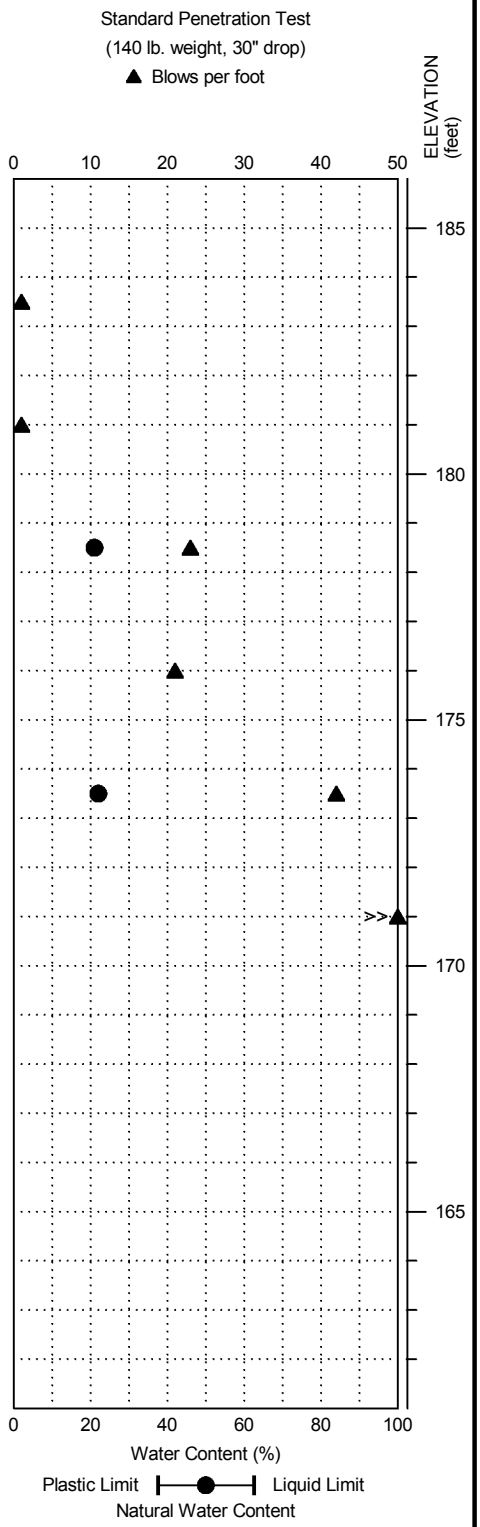

NOTE: This log of subsurface conditions applies only at the specified location and on the date indicated and therefore may not necessarily be indicative of other times and/or locations.

HWA GEOSCIENCES INC.

CEDAR CREEK CULVERT REPLACEMENT
KIRKLAND, WASHINGTON

BORING:
BH-2-19

PAGE: 1 of 1

PROJECT NO.: 2018-152-21 FIGURE: A-3

APPENDIX B

LABORATORY TESTING 2019

APPENDIX B

LABORATORY TESTING

Representative soil samples obtained from the explorations were returned to HWA's laboratory for further examination and testing. Laboratory tests were conducted on selected soil samples to characterize relevant engineering properties of the on-site materials.

MOISTURE CONTENT OF SOIL: The moisture content of selected soil samples (percent by dry mass) was determined in general accordance with ASTM D 2216. The results are shown at the sampled intervals on the appropriate summary logs in Appendix A.

PARTICLE SIZE ANALYSIS OF SOILS: Selected samples were tested to determine the particle size distribution of material in general accordance with ASTM D 422. The results are summarized on the attached Grain Size Distribution reports (Figures B-2 and B-3), which also provide information regarding the classification of the samples and the moisture content at the time of testing.

EXPLORATION DESIGNATION	TOP DEPTH (feet)	BOTTOM DEPTH (feet)	MOISTURE CONTENT (%)	ORGANIC CONTENT (%)	SPECIFIC GRAVITY	ATTERBERG LIMITS (%)			% GRAVEL	% SAND	% FINES	ASTM SOIL CLASSIFICATION	SAMPLE DESCRIPTION
						LL	PL	PI					
BH-1,S-4	10.0	11.5	20.7						19.6	41.2	39.1	SM	Dark gray, silty SAND with gravel
BH-1,S-6	15.0	16.5	9.5						26.5	46.1	27.4	SM	Dark gray, silty SAND with gravel
BH-2,S-3	7.5	9.0	21.3						25.4	36.2	38.3	SM	Dark grayish-brown, silty SAND with gravel
BH-2,S-5	12.5	14.0	22.0							93.3	6.7	SP-SM	Dark gray, poorly graded SAND with silt

Notes:
1. This table summarizes information presented elsewhere in the report and should be used in conjunction with the report test, other graphs and tables, and the exploration logs.
2. The soil classifications in this table are based on ASTM D2487 and D2488 as applicable.

HWA GEOSCIENCES INC.

CEDAR CREEK CULVERT REPLACEMENT
KIRKLAND, WASHINGTON

SUMMARY OF
MATERIAL PROPERTIES

PROJECT NO.: 2018-152-21 FIGURE: B-1

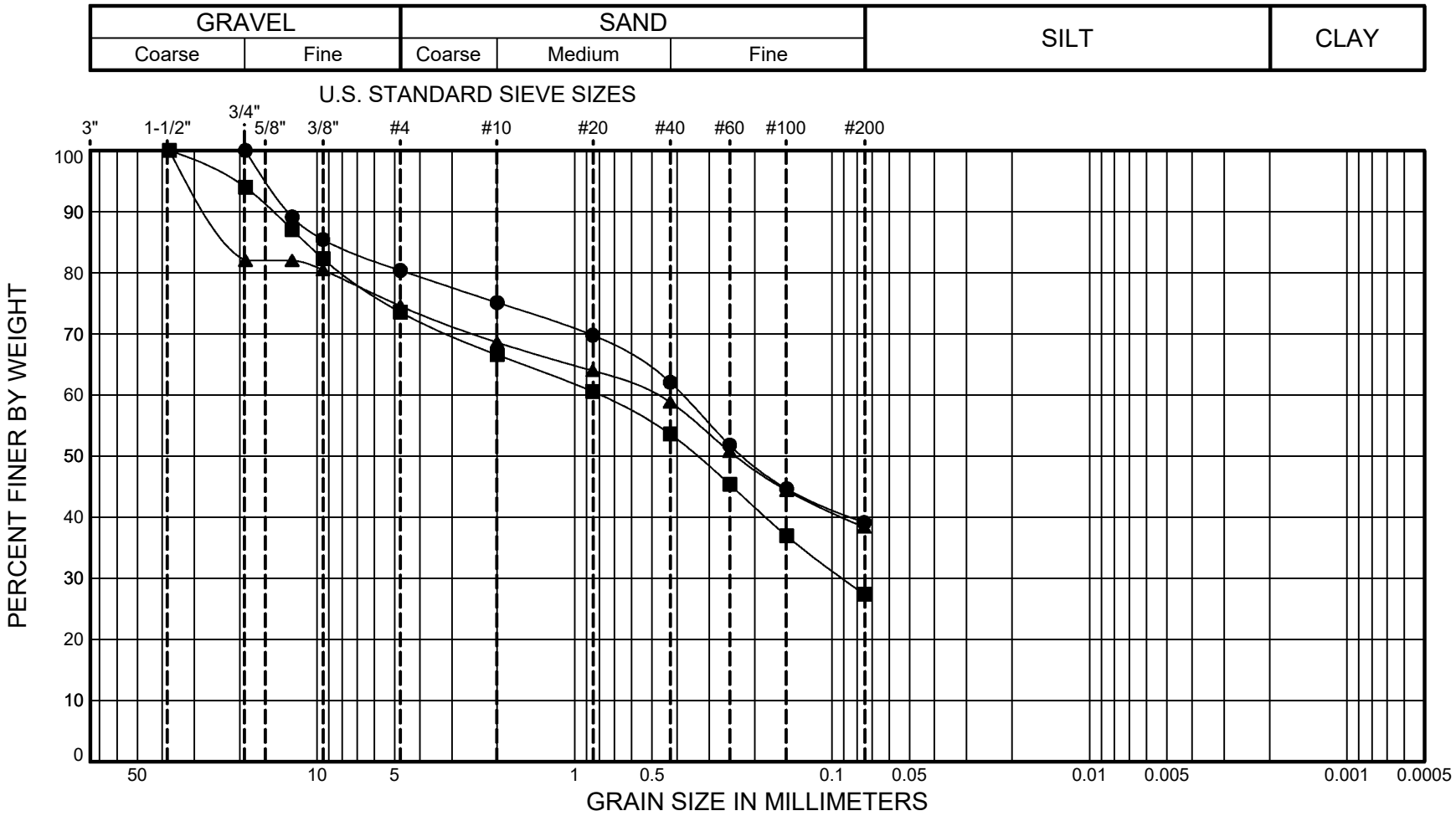

SYMBOL	SAMPLE		DEPTH (ft.)	CLASSIFICATION OF SOIL- ASTM D2487 Group Symbol and Name	% MC	LL	PL	PI	Gravel %	Sand %	Fines %
●	BH-1	S-4	10.0 - 11.5	(SM) Dark gray, silty SAND with gravel	21				19.6	41.2	39.1
■	BH-1	S-6	15.0 - 16.5	(SM) Dark gray, silty SAND with gravel	10				26.5	46.1	27.4
▲	BH-2	S-3	7.5 - 9.0	(SM) Dark grayish-brown, silty SAND with gravel	21				25.4	36.2	38.3

HWA GEOSCIENCES INC.

CEDAR CREEK CULVERT REPLACEMENT
KIRKLAND, WASHINGTON

PARTICLE-SIZE ANALYSIS
OF SOILS
METHOD ASTM D6913

PROJECT NO.: 2018-152-21 FIGURE: B-2

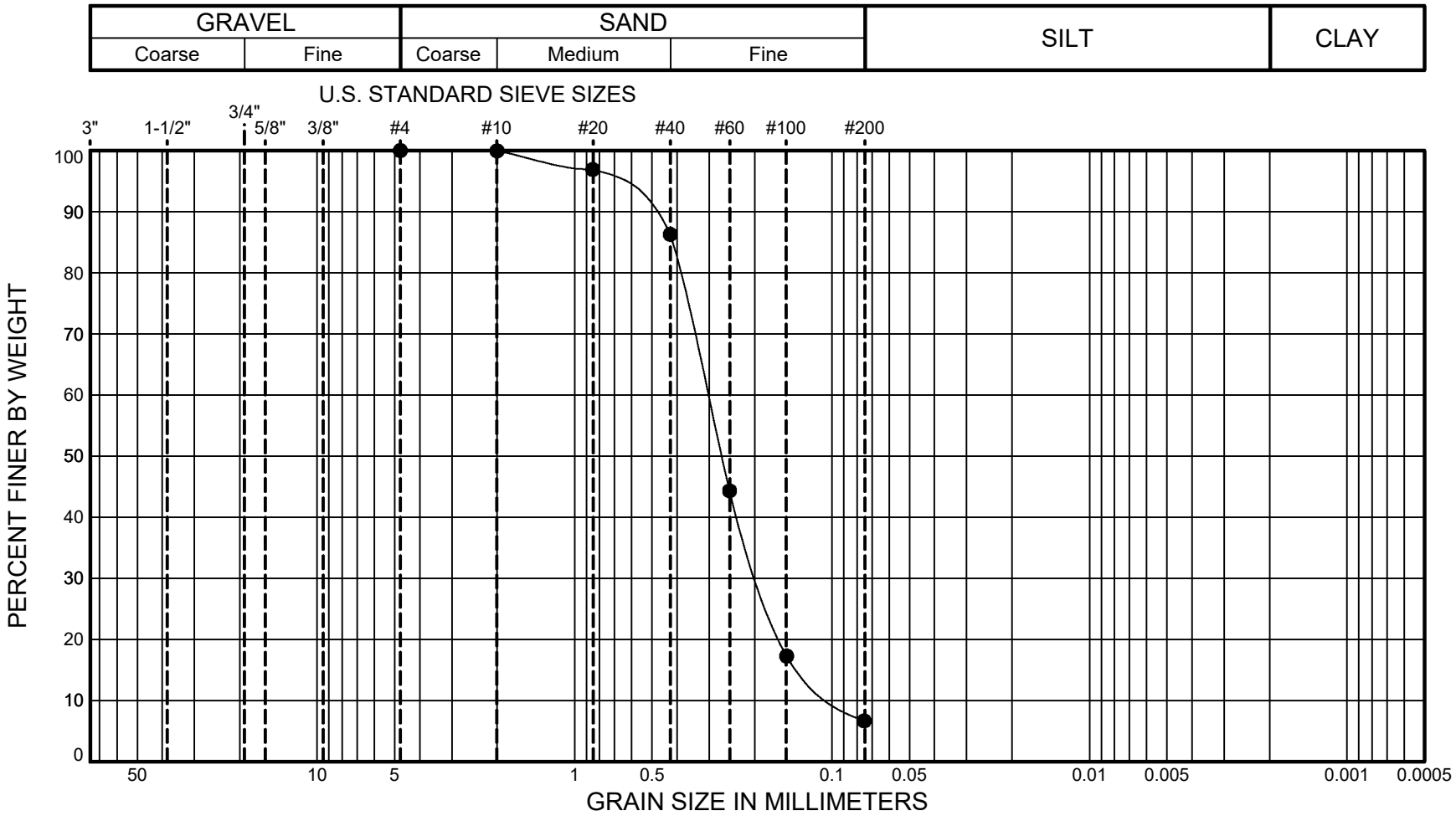

SYMBOL	SAMPLE		DEPTH (ft.)	CLASSIFICATION OF SOIL- ASTM D2487 Group Symbol and Name	% MC	LL	PL	PI	Gravel %	Sand %	Fines %
●	BH-2	S-5	12.5 - 14.0	(SP-SM) Dark gray, poorly graded SAND with silt	22					93.3	6.7

HWA GEOSCIENCES INC.

CEDAR CREEK CULVERT REPLACEMENT
KIRKLAND, WASHINGTON

PARTICLE-SIZE ANALYSIS
OF SOILS
METHOD ASTM D6913

PROJECT NO.: 2018-152-21 FIGURE: B-3

APPENDIX C

LOGS OF PREVIOUS HWA EXPLORATIONS

DRILLING COMPANY: Geologic Drill, Inc.
DRILLING METHOD: Bobcat MT52, HSA
SAMPLING METHOD: SPT w/ Cathead
LOCATION: See Figure 2

DATE STARTED: 8/16/2016
DATE COMPLETED: 8/16/2016
LOGGED BY: A. Sirjani

DEPTH (feet)	USCS SOIL CLASS	DESCRIPTION	SAMPLE TYPE / SAMPLE NUMBER	PEN. RESISTANCE (blows/6 inches)	OTHER TESTS
0	ML	Medium dense, olive-brown, sandy SILT, with gravel and rootlets, dry. **(FILL)**	S-1	5-6-14	GS
5			S-2	5-6-11	GS/HYD
		No rootlets present below 7.5' bgs.	S-3	9-6-7	GS
10	SM	Medium dense, yellow brown, slightly silty, SAND, with gravel, damp.	S-4	2-5-7	MC
	CL ML	Loose, blue gray, silty CLAY, rust mottled, moist. Decomposing wood fragment at 12.5' bgs. **(ALLUVIUM)**	S-5	5-4-5	AL
15	ML	Loose, olive-brown, SILT, moist. Poor recovery.	S-6	2-2-4	MC
		Decomposing black delaminated wood debris at 17.5'.	S-7A	2-2-5	
	SP SM	Loose, gray, SAND, with silt, wet.	S-7B		MC
20	SM	Loose, gray, silty SAND, with gravel, with decomposing wood fragment at 21.2', wet.	S-8	4-5-4	GS
	SM	Medium dense, dark gray, silty SAND, with gravel, wet. **(RECESSIONAL OUTWASH)**	S-9	8-9-18	GS
25		Medium dense, dark gray, silty, fine SAND, wet.	S-10	9-10-14	GS
30	SM	Very dense, dark gray, slightly silty, fine to coarse SAND, with scattered gravel, wet. **(ADVANCE OUTWASH)**	S-11	38-37-50/3"	MC
		Drilling action indicates gravel and boulders at 32' to 33' bgs.			
35					

GROUNDWATER

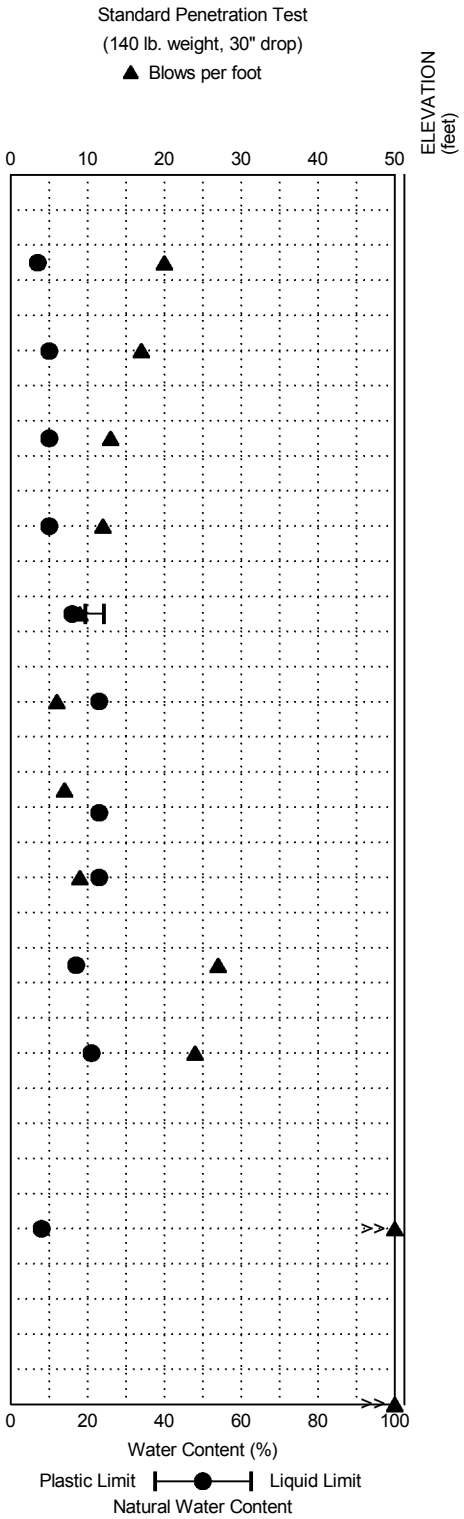

NOTE: This log of subsurface conditions applies only at the specified location and on the date indicated and therefore may not necessarily be indicative of other times and/or locations.

HWA GEOSCIENCES INC.

100th Avenue Corridor Improvements
Kirkland, Washington

BORING:
BH-07

PROJECT NO.: 2015-018-21 FIGURE: C-1

DRILLING COMPANY: Geologic Drill, Inc.
DRILLING METHOD: Bobcat MT52, HSA
SAMPLING METHOD: SPT w/ Cathead
LOCATION: See Figure 2

DATE STARTED: 8/16/2016
DATE COMPLETED: 8/16/2016
LOGGED BY: A. Sirjani

DEPTH (feet)	USCS SOIL CLASS	DESCRIPTION	SAMPLE TYPE	SAMPLE NUMBER	PEN. RESISTANCE (blows/6 inches)	OTHER TESTS
35	SP SM	Very dense, dark gray, poorly graded SAND, with silt, wet.		S-12	27-21-50/5"	
40	SP	Very dense, dark gray, medium grading to coarse SAND, with gravel, wet.		S-13	35-50/4"	MC
45				S-14	39-50/2"	
	SM	Very dense, dark olive-brown, very silty, SAND, with gravel, wet.				
	SM	Very dense, dark olive-gray, silty SAND, wet. Sand seams observed in the sampler.				
50				S-15	17-24-50/6"	MC
55						
60						
65						
70						

Borehole terminated at 51.5 feet.
1-inch piezometer installed to 50 feet with 10 feet of screen.
Water level at 17.5 ft bgs at the time of drilling.
DOE well tag#: BIK 716

GROUNDWATER

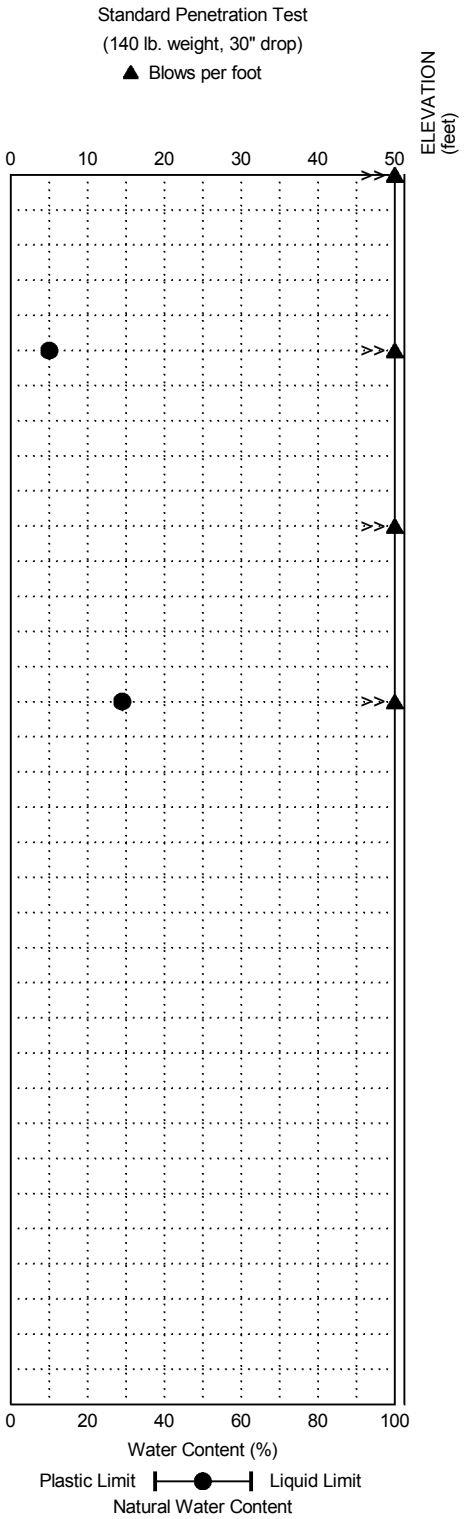

NOTE: This log of subsurface conditions applies only at the specified location and on the date indicated and therefore may not necessarily be indicative of other times and/or locations.

HWA GEOSCIENCES INC.

100th Avenue Corridor Improvements
Kirkland, Washington

BORING:
BH-07

PROJECT NO.: 2015-018-21 FIGURE: C-1

DRILLING COMPANY: Geologic Drill, Inc.
DRILLING METHOD: Hand Portable Acker, HSA
SAMPLING METHOD: SPT w/ Cathead
LOCATION: See Figure 2

DATE STARTED: 6/12/2017
DATE COMPLETED: 6/12/2017
LOGGED BY: A. Sirjani

DEPTH (feet)	USCS SOIL CLASS	DESCRIPTION	SAMPLE NUMBER	PEN. RESISTANCE (blows/6 inches)	OTHER TESTS
0	SM	Loose, yellow-brown, very silty, SAND, with scattered fine gravel, dry. Rootlets observed. **(FILL)**			
		Gravelly drilling action from 3 to 7 feet bgs.	S-1	8-4-3	
5		4" thick piece of tree root stuck at the tip of the sampler. No soil recovery at 5 feet bgs.	S-2	9-3-3	
	ML	Loose, gray, SILT, wet.	S-3A	2-1-6	AL
	SM	**(ALLUVIUM)**	S-3B		GS
10	SM	Loose, gray, slightly silty, medium SAND, with gravel, moist to wet.	S-4	4-4-6	GS
		4" recovery.			
	SP	Loose, gray, interbeded, 2" medium to coarse SAND, and 2" SILT, wet.	S-5	9-19-25	MC
15	SM	Dense, gray, fine to medium, SAND, with scattered fine to medium gravel, with stratified fine sand and silt bands, wet. **(ADVANCE OUTWASH)**	S-6	10-15-17	
		Dense, gray, silty, medium grading to fine SAND, wet.	S-7	10-17-40	
		slightly fine to medium gravelly at 18.8 feet bgs.			
20		Very dense, gray, gravelly, medium coarse SAND, with stratified 1/2" silt band at 20.8 feet bgs, wet.	S-8	26-50/5"	
25	SP SM	Very dense, gray, slightly silty, SAND, with gravel, wet.	S-9	32-50/6"	
30	SP	Very dense, gray, fine to medium SAND, wet.	S-10	50/6"	
35		3 feet of heave observed at 35 feet bgs. Used mud to clear the heave and obtain a sample at 35 feet.	S-11	10-31-50/6"	
40		Borehole was terminated at 36.5 feet below ground surface (bgs) due to practical refusal at 35 feet as the drillers could not drill past 35 feet due to excessive heave. Ground water seepage was observed at 10 feet bgs at the time of the exploration.			
45					

GROUNDWATER

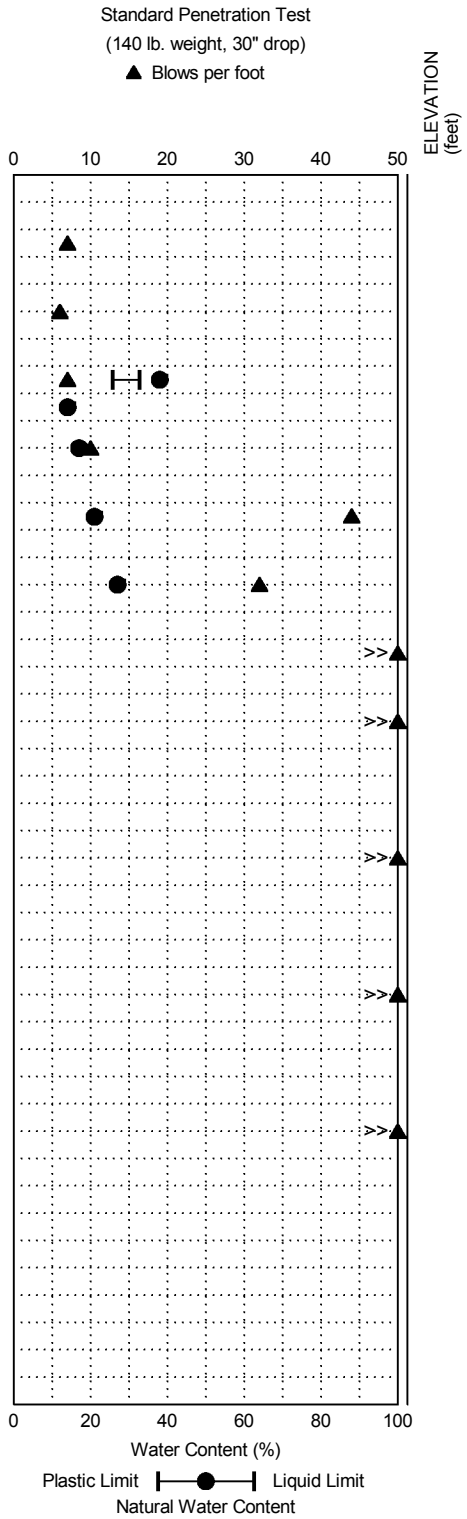

NOTE: This log of subsurface conditions applies only at the specified location and on the date indicated and therefore may not necessarily be indicative of other times and/or locations.

HWA GEOSCIENCES INC.

100th Avenue Corridor Improvements
Kirkland, Washington

BORING:
BH-30

PROJECT NO.: 2015-018-21 FIGURE: C-2

DRILLING COMPANY: Geologic Drill, Inc.
DRILLING METHOD: Hand Portable Acker, HSA
SAMPLING METHOD: SPT w/ Cathead
LOCATION: See Figure 2

DATE STARTED: 6/12/2017
DATE COMPLETED: 6/12/2017
LOGGED BY: A. Sirjani

DEPTH (feet)	SYMBOL	USCS SOIL CLASS	DESCRIPTION	SAMPLE TYPE	SAMPLE NUMBER	PEN. RESISTANCE (blows/6 inches)	OTHER TESTS	GROUNDWATER
0		SM	Loose, brown, silty SAND, with scattered gravel, dry. **(FILL)**					
		SP	Loose, yellow-brown, SAND, with scattered gravel, dry. Rootlets obseved within the sample.		S-1	3-2-3		
5		SM	Medium dense, yellow-brown, slightly silty, SAND, with gravel, dry to moist.		S-2	7-7-8		
					S-3	8-17-11		
10			Borehole was terminated at 9 feet below ground surface (bgs) due to practical refusal as the drillers could not drill with augers passed 7.5 feet bgs. Ground water seepage was not observed at the time of the exploration.					
15								
20								
25								
30								
35								

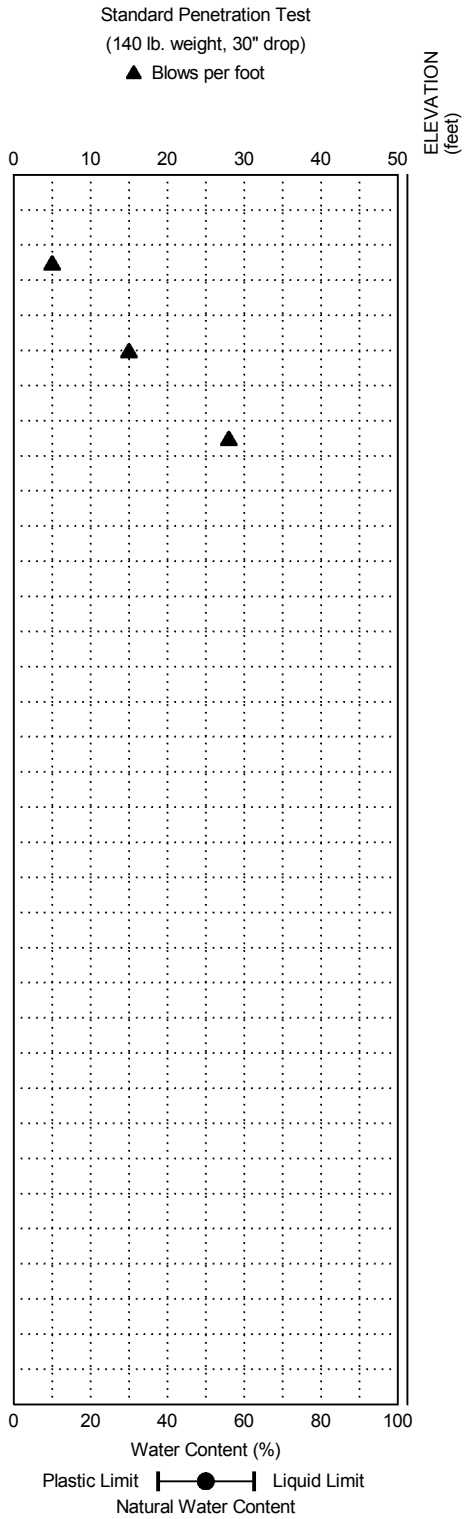

NOTE: This log of subsurface conditions applies only at the specified location and on the date indicated and therefore may not necessarily be indicative of other times and/or locations.

HWA GEOSCIENCES INC.

100th Avenue Corridor Improvements
Kirkland, Washington

BORING:
BH-31

PROJECT NO.: 2015-018-21 FIGURE: C-3

DRILLING COMPANY: HWA GeoSciences Inc.
DRILLING METHOD: Hand Auger
SAMPLING METHOD: Grab
LOCATION: See Figure 2

DATE STARTED: 6/7/2017
DATE COMPLETED: 6/7/2017
LOGGED BY: V. Oskierko

DEPTH (feet)	SYMBOL	USCS SOIL CLASS	DESCRIPTION	SAMPLE TYPE / SAMPLE NUMBER	PEN. RESISTANCE (blows/6 inches)	OTHER TESTS	GROUNDWATER
0		SP	Grass, gravel. **(TOPSOIL)**				
		SM	Medium dense to dense, brown, fine to coarse SAND with silt. Fine gravel and pieces of asphalt observed. **(FILL)**	S-1			
5							
10							

Hole terminated at 7.7 feet below ground surface due to practical refusal.
Several attempts to auger past large rock, only to have continuous sloughing from above.
No ground water seepage was observed at the time of exploration.
DCP testing was terminated at 9.4 feet below ground surface.

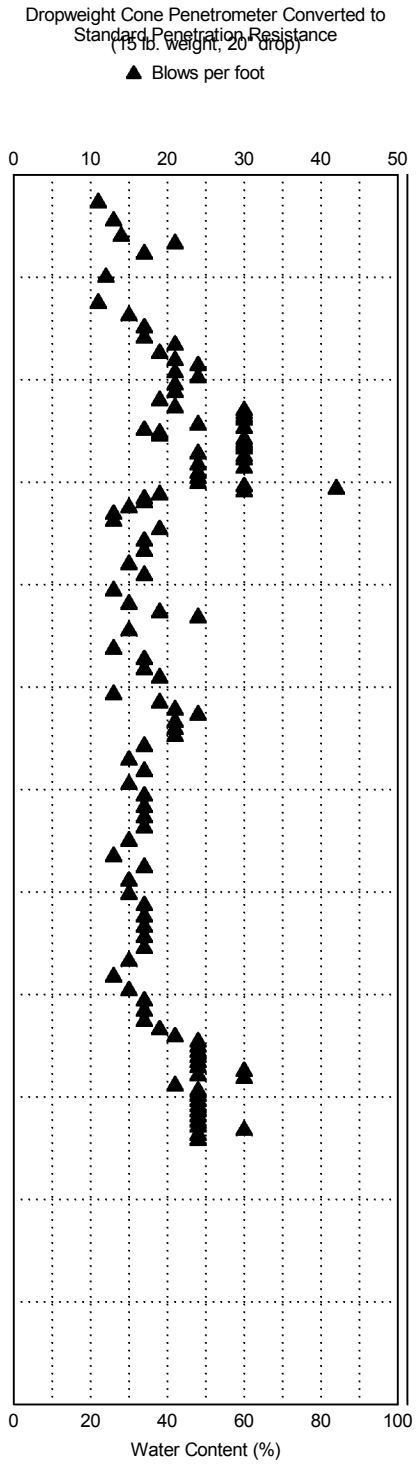

NOTE: This log of subsurface conditions applies only at the specified location and on the date indicated and therefore may not necessarily be indicative of other times and/or locations.

HWA GEOSCIENCES INC.

100th Avenue Corridor Improvements
Kirkland, Washington

BORING:
HH-1

PROJECT NO.: 2015-018-21 FIGURE: C-5

DRILLING COMPANY: HWA GeoSciences Inc.
DRILLING METHOD: Hand Auger
SAMPLING METHOD: Grab
LOCATION: See Figure 2

DATE STARTED: 6/6/2017
DATE COMPLETED: 6/6/2017
LOGGED BY: V. Oskierko

DEPTH (feet)	SYMBOL	USCS SOIL CLASS	DESCRIPTION	SAMPLE TYPE / SAMPLE NUMBER	PEN. RESISTANCE (blows/6 inches)	OTHER TESTS	GROUNDWATER	ELEVATION (feet)
0		SW	Loose, light brown, fine to coarse SAND, dry. **(TOPSOIL)**					
			Medium dense, brown, fine to coarse SAND with gravel, moist. **(FILL?)**					
5								
10				S-1				

Hole terminated at 10 feet below ground surface.
No ground water seepage was observed at the time of exploration.
DCP testing was terminated at 9.33 feet below ground surface.

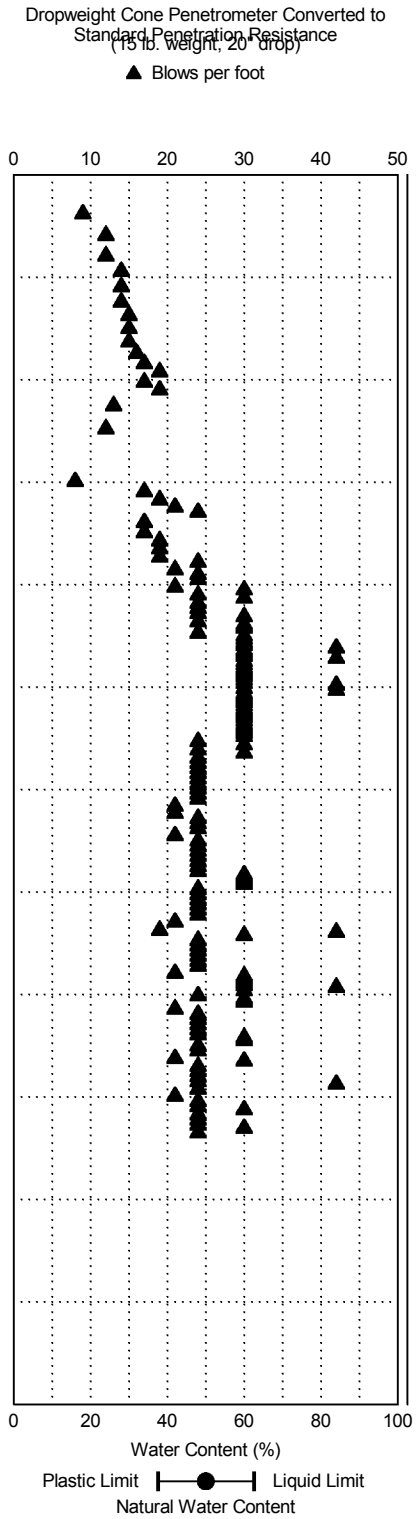

NOTE: This log of subsurface conditions applies only at the specified location and on the date indicated and therefore may not necessarily be indicative of other times and/or locations.

HWA GEOSCIENCES INC.

100th Avenue Corridor Improvements
Kirkland, Washington

BORING:
HH-2

PROJECT NO.: 2015-018-21 FIGURE: C-6

DRILLING COMPANY: HWA GeoSciences Inc.
DRILLING METHOD: Hand Auger
SAMPLING METHOD: Grab
LOCATION: See Figure 2

DATE STARTED: 6/6/2017
DATE COMPLETED: 6/6/2017
LOGGED BY: V. Oskierko

DEPTH (feet)	USCS SOIL CLASS	DESCRIPTION	SAMPLE NUMBER
0		Loose, dark brown, silty, fine SAND with organic matter. **(TOPSOIL)**	
	SP	Loose to medium dense, reddish brown, silty, fine SAND, moist. **(RECESSIONAL OUTWASH)**	S-1
	SP	Medium dense to dense, grayish brown, silty, fine to medium SAND, moist. **(RECESSIONAL OUTWASH)**	S-2
	SP	Medium dense to dense, gray, silty, fine to medium SAND, moist. **(RECESSIONAL OUTWASH)**	
		Becomes wet from 48 to 52"	S-3
5	SP SM	Stiff, gray clay lens with oxidation staining at 62". Medium dense to dense, gray, fine to medium SAND with silt, wet. **(RECESSIONAL OUTWASH)**	
	SP SM	Dense, dark grayish brown, silty, fine to medium SAND, wet. **(RECESSIONAL OUTWASH)**	S-4
	CL	Very stiff to hard, gray, CLAY, moist. **(RECESSIONAL LACUSTRINE)**	S-5
	SP SM	Dense, reddish-brown, fine to medium SAND with silt, moist. Rust mottling observed from 94" to 98". **(RECESSIONAL OUTWASH)**	S-6
	SP SM	Dense to very dense, gray, fine to medium SAND with silt, wet. **(RECESSIONAL OUTWASH)**	
10			

Hole terminated at 10 feet below ground surface.
Ground water seepage observed at 5.17 feet at the time of exploration.
DCP testing was terminated at 9.33 feet below ground surface.

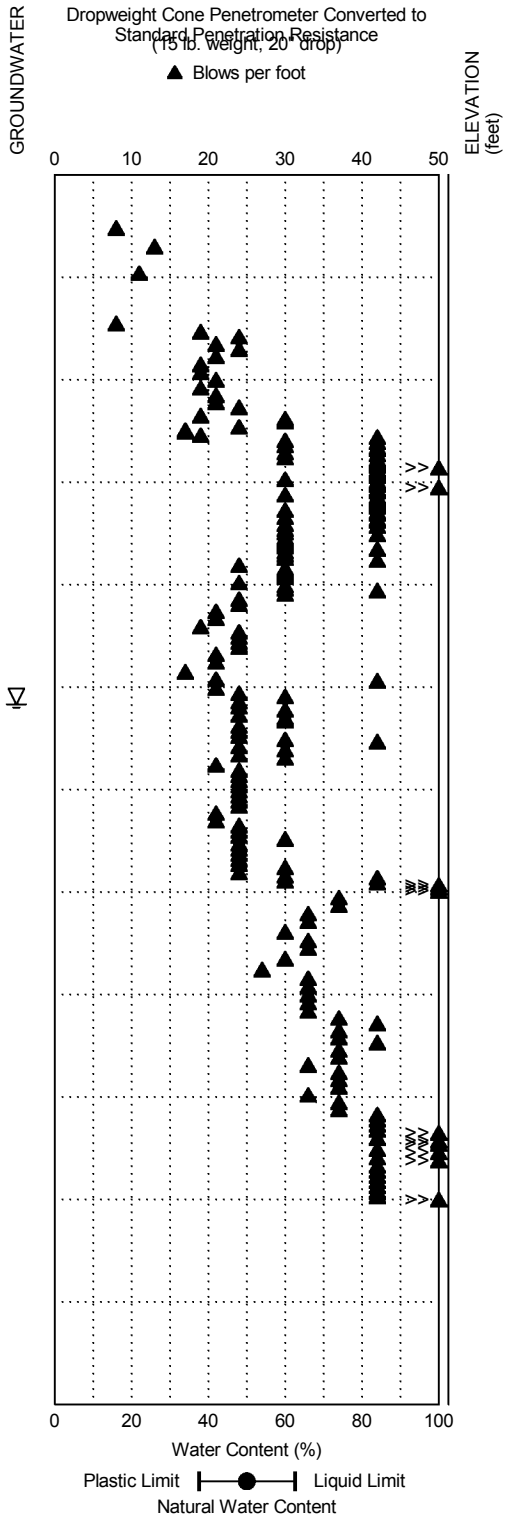

NOTE: This log of subsurface conditions applies only at the specified location and on the date indicated and therefore may not necessarily be indicative of other times and/or locations.

HWA GEOSCIENCES INC.

100th Avenue Corridor Improvements
Kirkland, Washington

BORING:
HH-3

PAGE: 1 of 1

PROJECT NO.: 2015-018-21 FIGURE: C-7

APPENDIX D

LOGS OF EXPLORATIONS PERFORMED BY OTHERS

LOG OF BORING
BORING B-3

PROJECT: **100th Ave NE-NE 140th St to NE 145th St**
BORING LOCATION: **100th Ave NE, Sta 68+12 Rt 15'**
DRILL METHOD: **Truck mounted hollow stem auger**
DRILLER: **R&R Drilling**
DEPTH TO - Water: **20'** Caving: **N/A**

DATE: **12/20/00**
START: **N/A**
FINISH: **N/A**
LOGGER: **DW**
DATE CHECKED: **12/20/00**

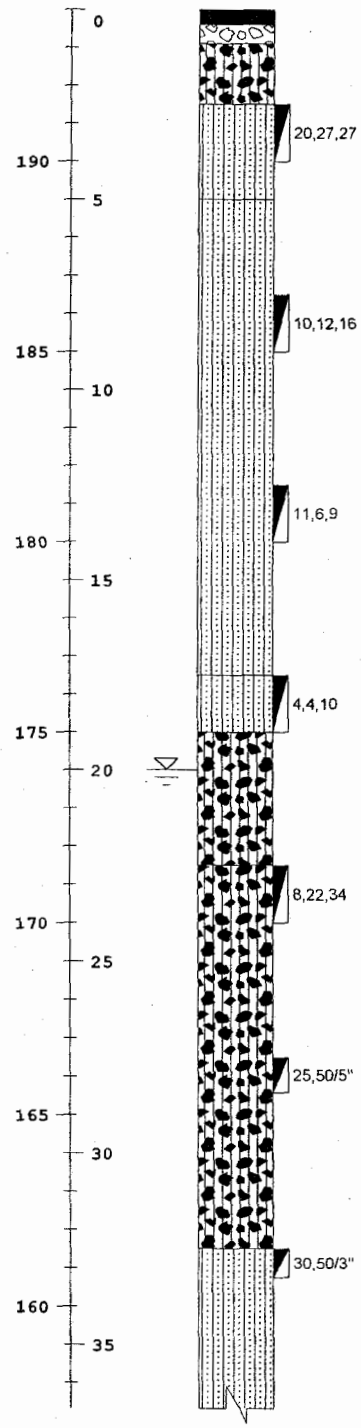

ELEVATION/ DEPTH	SOIL SYMBOLS SAMPLER SYMBOLS AND FIELD TEST DATA	USCS	Description	Moist (%)	-200 (%)	Remarks
			5" ACP			
		GM	6" Crushed surfacing			
		SM	Brown silty gravel, moist, medium dense. (fill)			Blow counts maybe overstated due to gravel or cobble.
		SM	Brown silty sand with gravel, moist to wet, very dense.(fill)			Encountered perched water at 5'.
			Brown silty sand, wet, medium dense. (fill)			
		SM	Gray silty sand with organics, wet, medium dense. (fill?)			Gravel in tip.
		GM	Gray silty gravel, wet, medium dense.			Groundwater at approximately 20 feet.
		GM	Gray silty gravel, wet, very dense.			Minimal sample recovery
						No recovery
		SM	Gray silty sand with gravel, wet, very dense.			

The boring was located in the eastside road shoulder of 100th Avenue NE. Perched water was encountered at approximately 5' below the road surface. Groundwater was encountered at approximately 20 feet below the road surface.

PLATE NUMBER **3**

LOG OF BORING
BORING B-3
(continued)

ELEVATION/ DEPTH	SOIL SYMBOLS SAMPLER SYMBOLS AND FIELD TEST DATA	USCS	Description	Moist (%)	-200 (%)	Remarks
155 / 40	16,50/6"		Same-increasing gravel			
150 / 45	11,17,39	SP	Gray poorly graded sand, wet, very dense.			
145 / 50		SP	Gray poorly graded sand with 2" layer of organic silt, wet, very dense.			Push sample, heave in auger.
140 / 55						
135 / 60						
130 / 65						
125 / 70						
120 / 75						
115 / 80						

LOG OF BORING
BORING B-4

PROJECT: **100th Ave NE-NE 140th St to NE 145th St**
BORING LOCATION: **100th Ave NE, Sta 68+17 Rt 14'**
DRILL METHOD: **Truck mounted hollow stem auger**
DRILLER: **Holocene Drilling**
DEPTH TO - Water: **5'** Caving: **N/A**

DATE: **11/21/00**
START: **N/A**
FINISH: **N/A**
LOGGER: **DW**
DATE CHECKED: **11/21/00**

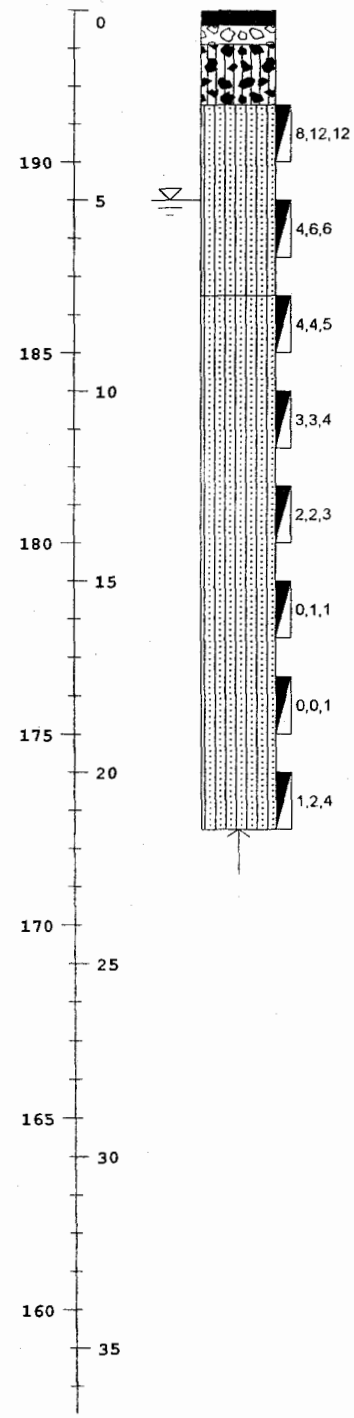

ELEVATION/ DEPTH	SOIL SYMBOLS SAMPLER SYMBOLS AND FIELD TEST DATA	USCS	Description	Moist (%)	-200 (%)	Remarks
			5" ACP			
		GM	6" Crushed surfacing			
		SM	Brown silty gravel, moist, medium dense. (fill)			
			Brown silty sand with gravel, moist to wet, medium dense. (fill)			Encountered perched water at 5'
		SM	Brown to gray silty sand with gravel, moist to wet, very loose to loose. (fill)			

The boring was advanced in the eastside road shoulder of 100th Avenue NE. Perched water was encountered at approximately 5' below the road surface.

PLATE NUMBER **4**

APPENDIX E

SLOPE STABILITY ANALYSES FOR THE EXISTING SLOPES

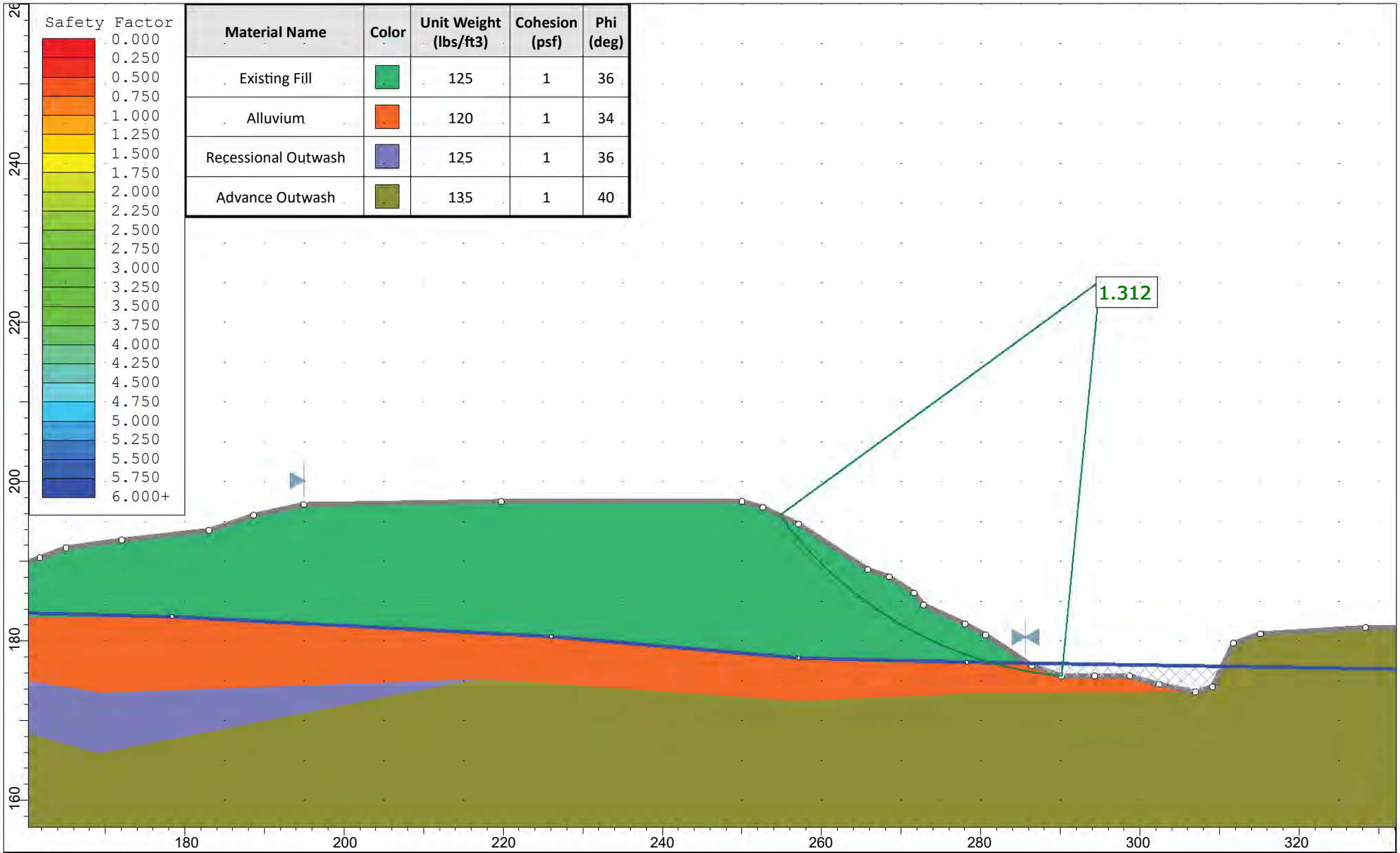

Material Name	Color	Unit Weight (lbs/ft3)	Cohesion (psf)	Phi (deg)
Existing Fill		125	1	36
Alluvium		120	1	34
Recessional Outwash		125	1	36
Advance Outwash		135	1	40

HWA GEOSCIENCES INC.
DBE/MWBE

SLIDEINTERPRET 8.029

Project	Figure E-1 - Cedar Creek - Existing Slope Conditions		
Analysis Description	Global Slope Stability Analysis - Eastern Slope		
Drawn By: SKS	Scale: 1:200	Company: HWA GeoSciences, Inc.	
Date: 1/24/2020		Loading Scenario: Static Analysis	

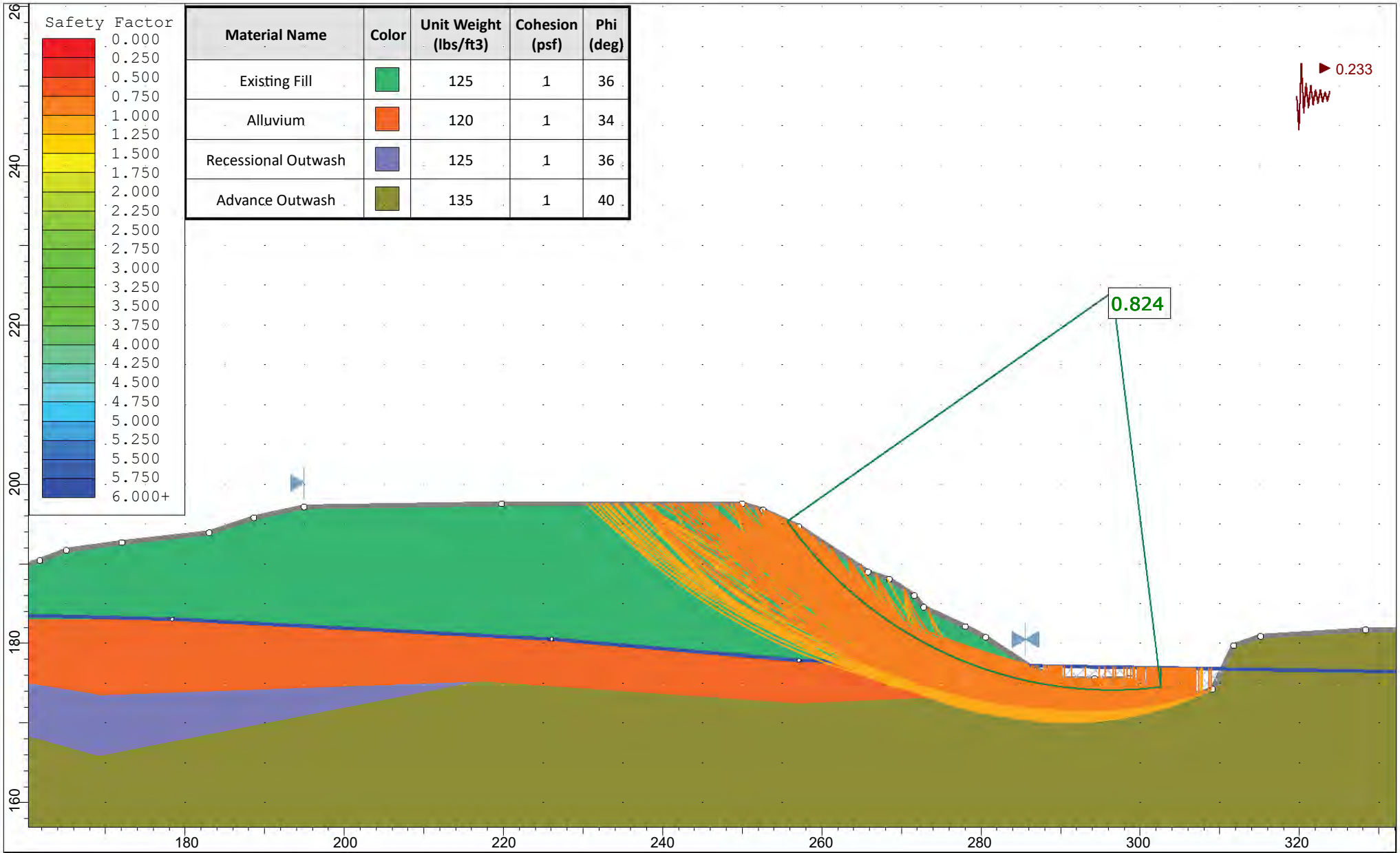

Material Name	Color	Unit Weight (lbs/ft3)	Cohesion (psf)	Phi (deg)
Existing Fill		125	1	36
Alluvium		120	1	34
Recessional Outwash		125	1	36
Advance Outwash		135	1	40

HWA GEOSCIENCES INC.
DBE/MWBE

SLIDEINTERPRET 8.029

Project	Figure E-2 - Cedar Creek - Existing Slope Conditions		
Analysis Description	Global Slope Stability Analysis - Eastern Slope		
Drawn By: SKS	Scale: 1:200	Company: HWA GeoSciences, Inc.	
Date: 1/24/2020		Loading Scenario: Psuedostatic Analysis	

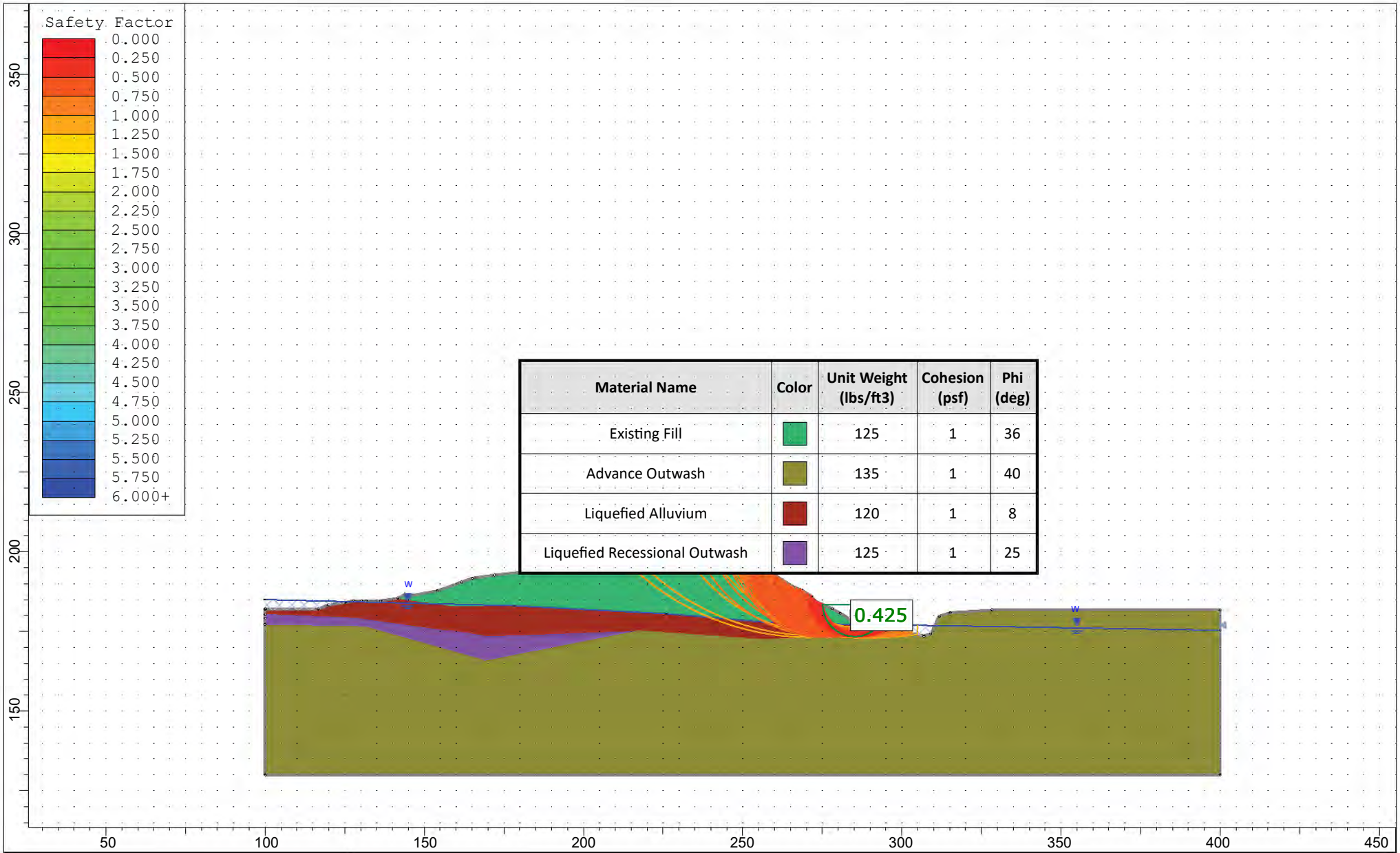

Material Name	Color	Unit Weight (lbs/ft3)	Cohesion (psf)	Phi (deg)
Existing Fill		125	1	36
Advance Outwash		135	1	40
Liquefied Alluvium		120	1	8
Liquefied Recessional Outwash		125	1	25

HWA GEOSCIENCES INC.
DBE/MWBE

SLIDEINTERPRET 8.029

Project	Figure E-3 - Cedar Creek - Existing Slope Conditions		
Analysis Description	Global Slope Stability Analysis - Eastern Slope		
Drawn By: SKS	Scale: 1:500	Company: HWA GeoSciences, Inc.	
Date: 1/24/2020		Loading Scenario: Post Liquefaction Analysis	

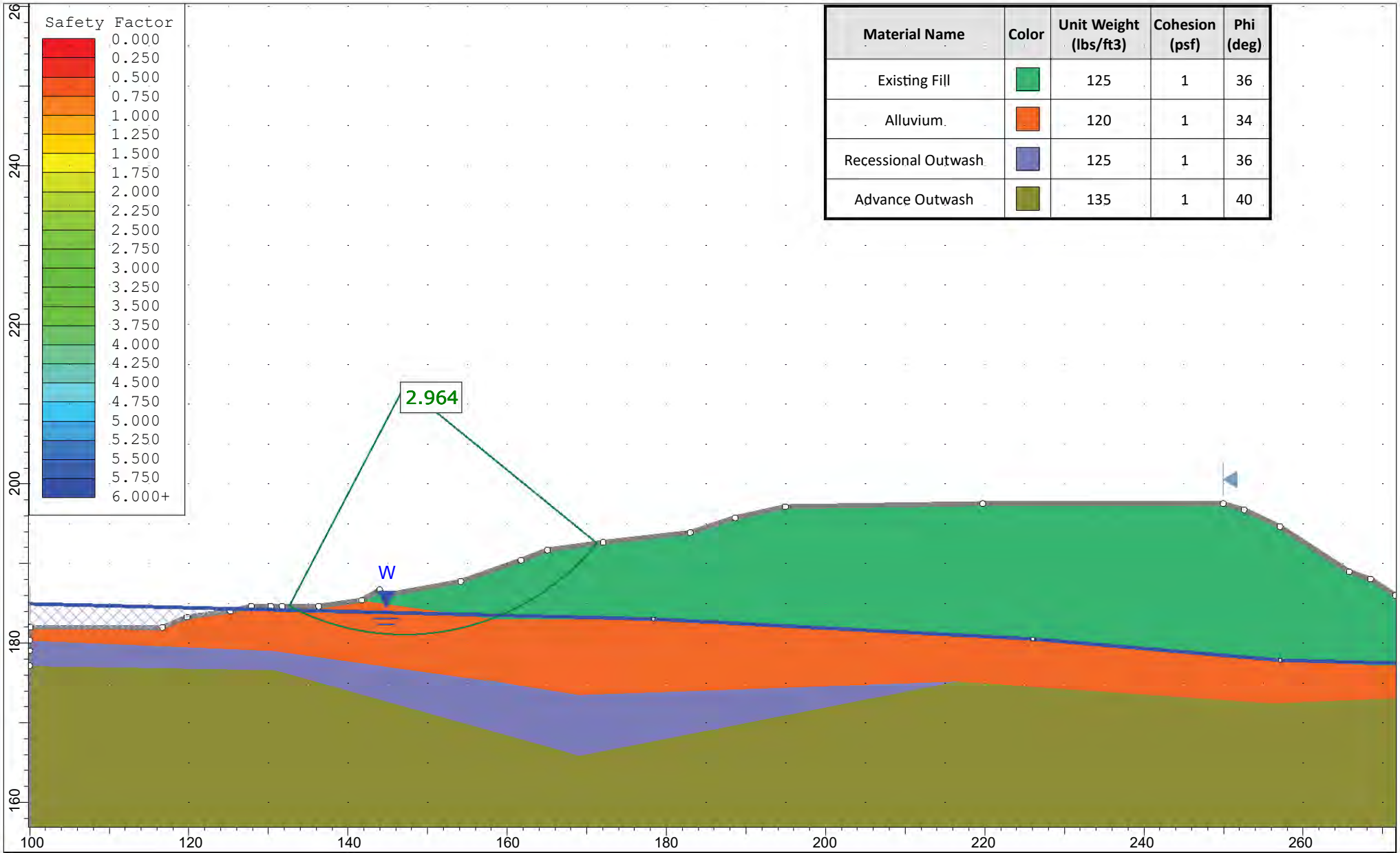

Material Name	Color	Unit Weight (lbs/ft3)	Cohesion (psf)	Phi (deg)
Existing Fill		125	1	36
Alluvium		120	1	34
Recessional Outwash		125	1	36
Advance Outwash		135	1	40

HWA GEOSCIENCES INC.
DBE/MWBE

SLIDEINTERPRET 8.029

Project	Figure E-4 - Cedar Creek - Existing Slope Conditions		
Analysis Description	Global Slope Stability Analysis - Western Slope		
Drawn By: SKS	Scale: 1:200	Company: HWA GeoSciences, Inc.	
Date: 1/24/2020		Loading Scenario: Static Analysis	

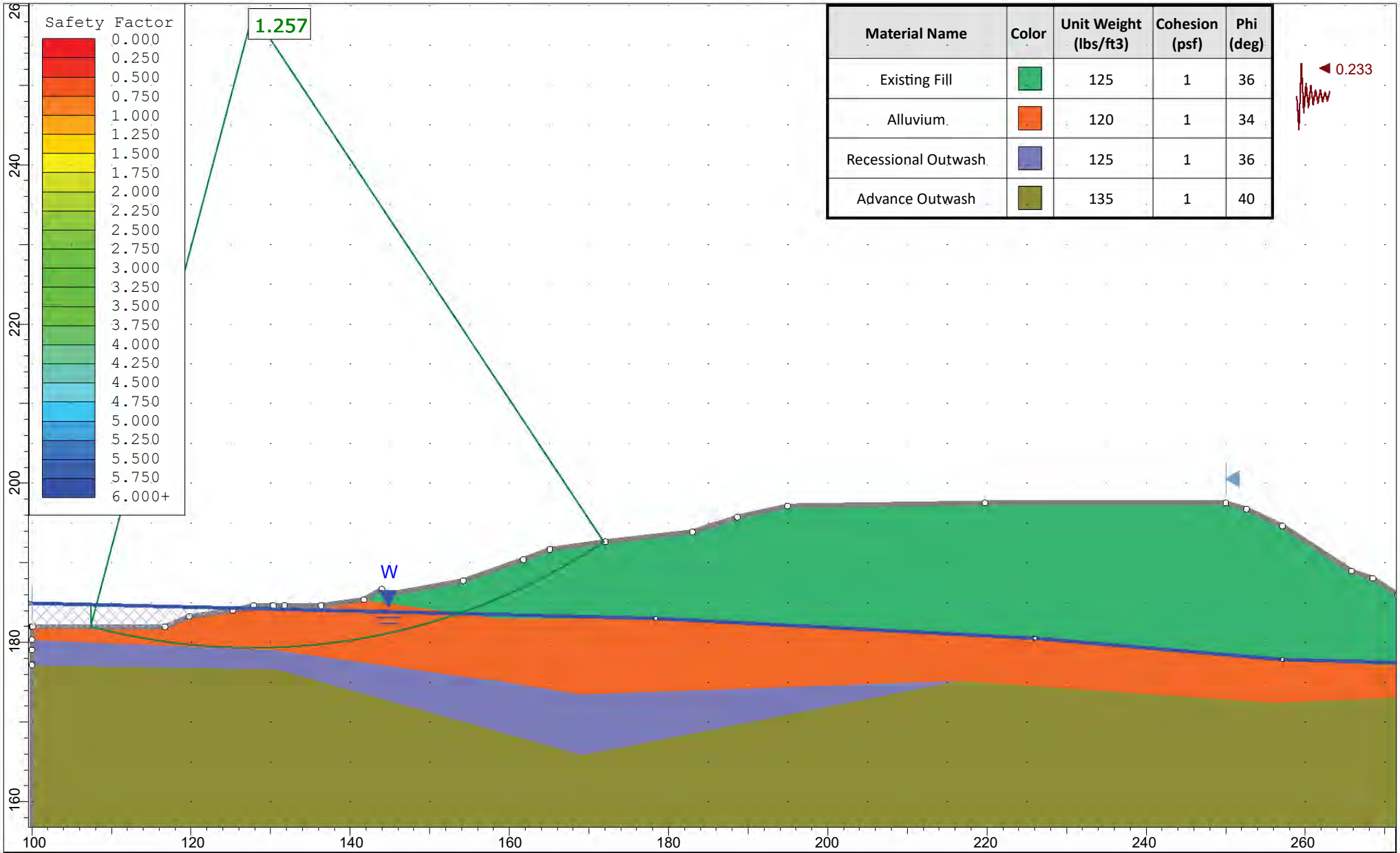

Material Name	Color	Unit Weight (lbs/ft3)	Cohesion (psf)	Phi (deg)
Existing Fill		125	1	36
Alluvium		120	1	34
Recessional Outwash		125	1	36
Advance Outwash		135	1	40

HWA GEOSCIENCES INC.
DBE/MWBE

SLIDEINTERPRET 8.029

Project	Figure E-5 - Cedar Creek - Existing Slope Conditions		
Analysis Description	Global Slope Stability Analysis - Western Slope		
Drawn By	SKS	Scale 1:200	Company HWA GeoSciences, Inc.
Date	1/24/2020		Loading Scenario Pseudostatic Analysis

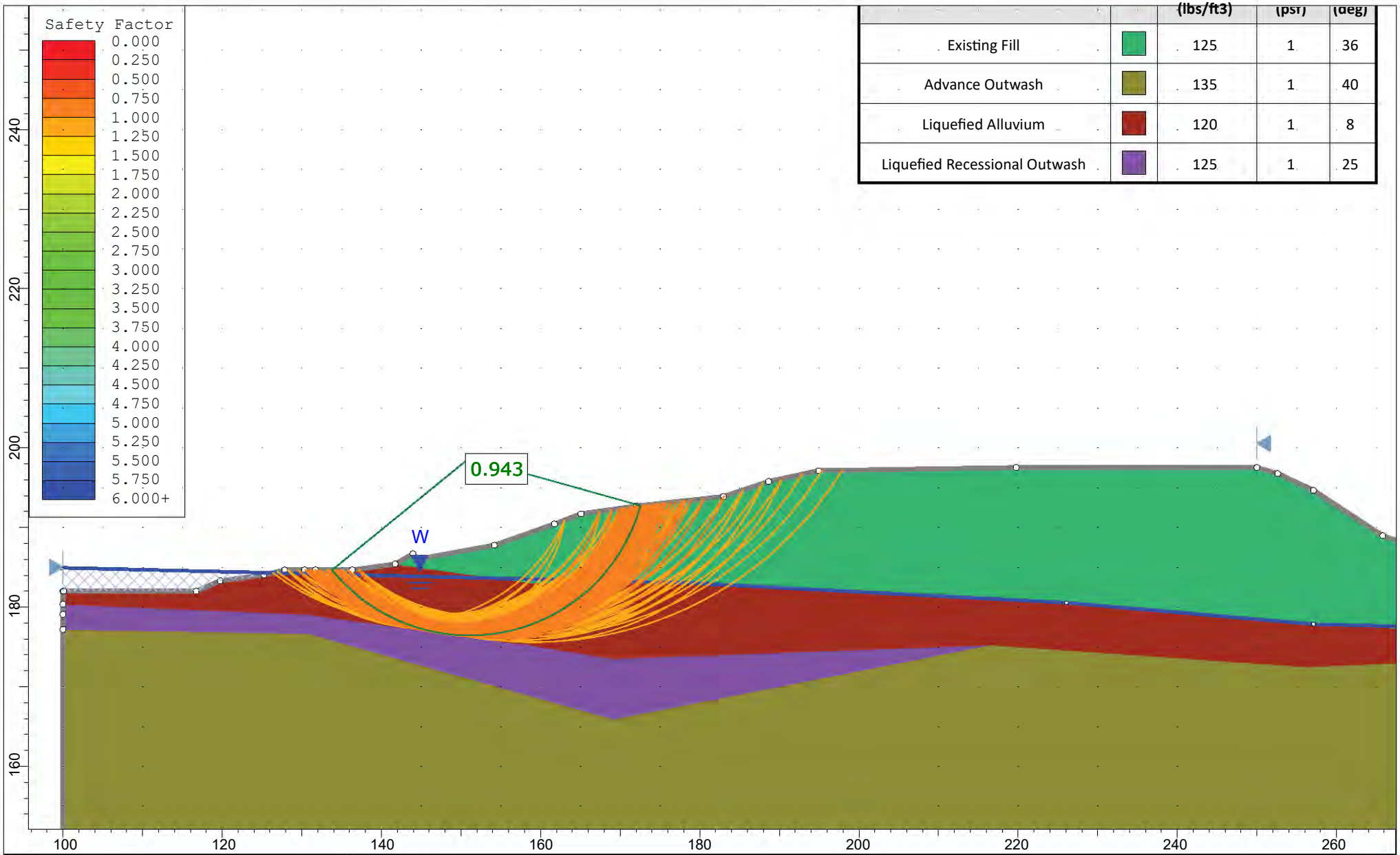

		(lbs/ft3)	(psf)	(deg)
Existing Fill		125	1	36
Advance Outwash		135	1	40
Liquefied Alluvium		120	1	8
Liquefied Recessional Outwash		125	1	25

HWA GEOSCIENCES INC.
DBE/MWBE

SLIDEINTERPRET 8.029

Project	Figure E-6 - Cedar Creek - Existing Slope Conditions		
Analysis Description	Global Slope Stability Analysis - Western Slope		
Drawn By	SKS	Scale 1:200	Company HWA GeoSciences, Inc.
Date	1/24/2020		Loading Scenario Post Liquefaction Analysis

APPENDIX F

GLOBAL STABILITY ANALYSES FOR STATIC CONDITIONS FOR THE PROPOSED EASTERN WING WALLS

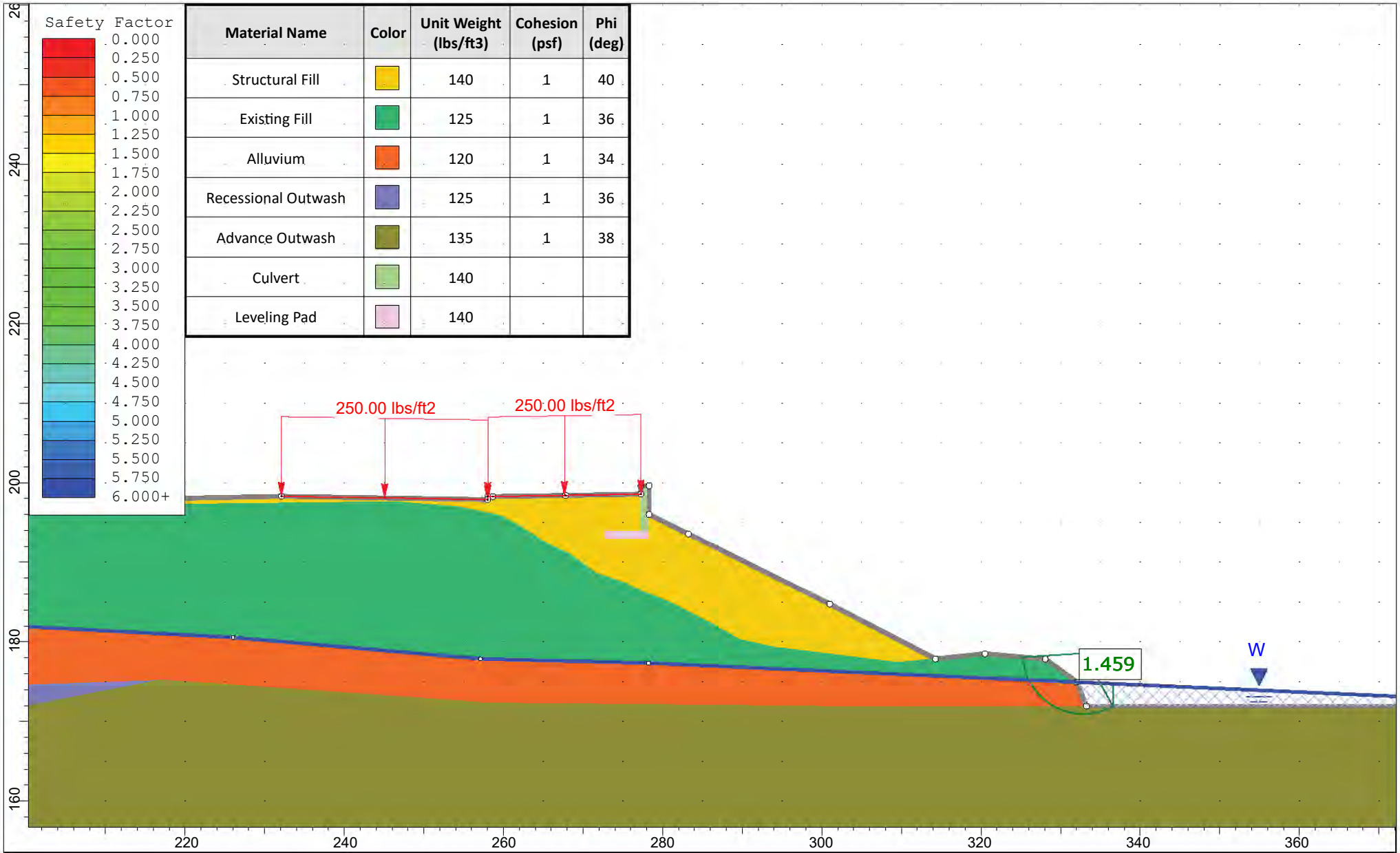

Material Name	Color	Unit Weight (lbs/ft3)	Cohesion (psf)	Phi (deg)
Structural Fill		140	1	40
Existing Fill		125	1	36
Alluvium		120	1	34
Recessional Outwash		125	1	36
Advance Outwash		135	1	38
Culvert		140		
Leveling Pad		140		

HWA GEOSCIENCES INC.
DBE/MWBE

SLIDEINTERPRET 8.029

Project	Figure F-1 - Cedar Creek - 6th Lift - STA 10+00 to STA 10+09		
Analysis Description	Global Slope Stability Analysis - Without Improvements		
Drawn By	SKS	Scale 1:200	Company HWA GeoSciences, Inc.
Date	1/24/2020		Loading Scenario Static Analysis

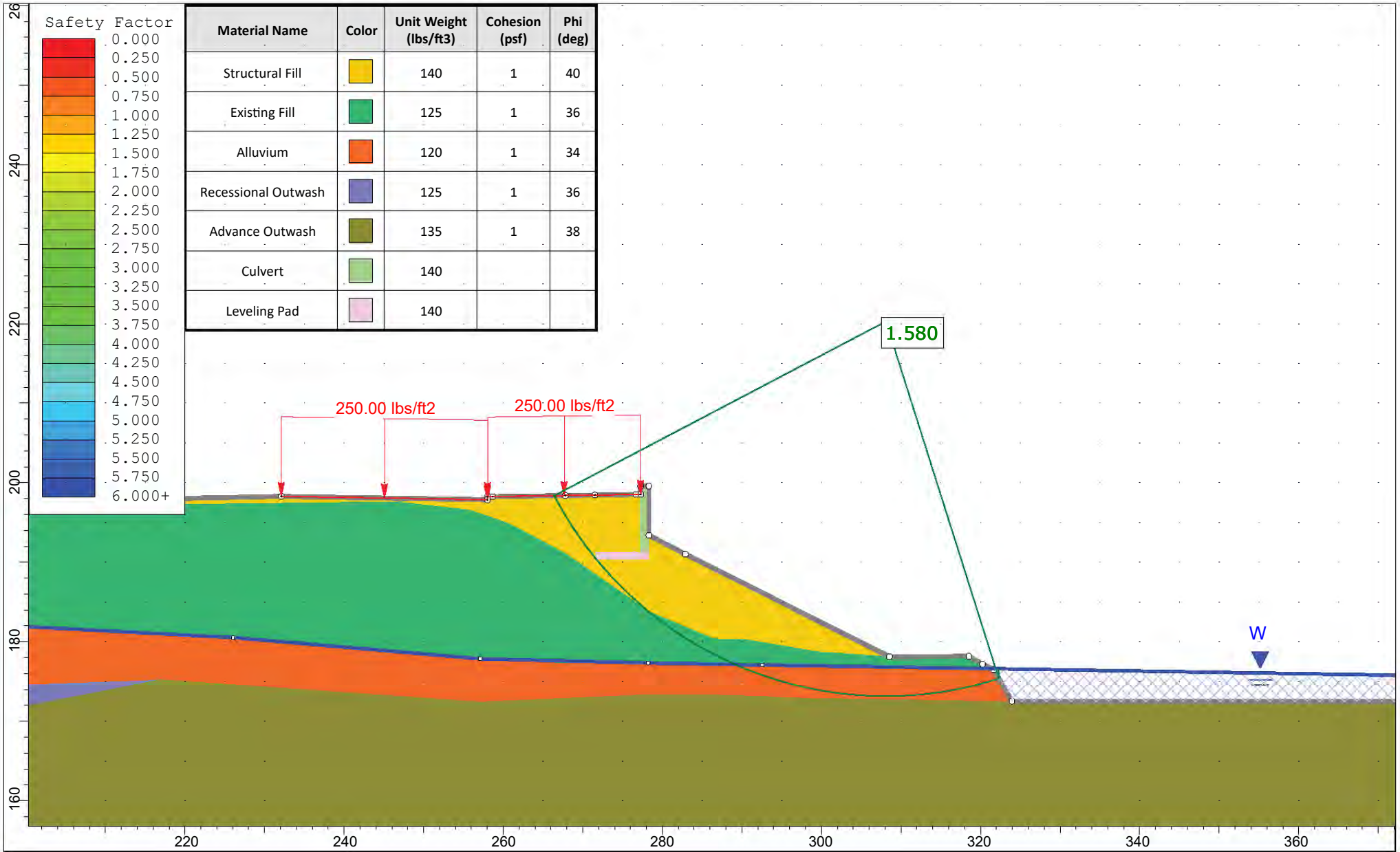

Material Name	Color	Unit Weight (lbs/ft3)	Cohesion (psf)	Phi (deg)
Structural Fill		140	1	40
Existing Fill		125	1	36
Alluvium		120	1	34
Recessional Outwash		125	1	36
Advance Outwash		135	1	38
Culvert		140		
Leveling Pad		140		

HWA GEOSCIENCES INC.
DBE/MWBE

SLIDEINTERPRET 8.029

Project	Figure F-2 - Cedar Creek - 5th Lift - STA 10+09 to STA 10+20		
Analysis Description	Global Slope Stability Analysis - Without Improvements		
Drawn By	SKS	Scale 1:200	Company HWA GeoSciences, Inc.
Date	1/24/2020		Loading Scenario Static Analysis

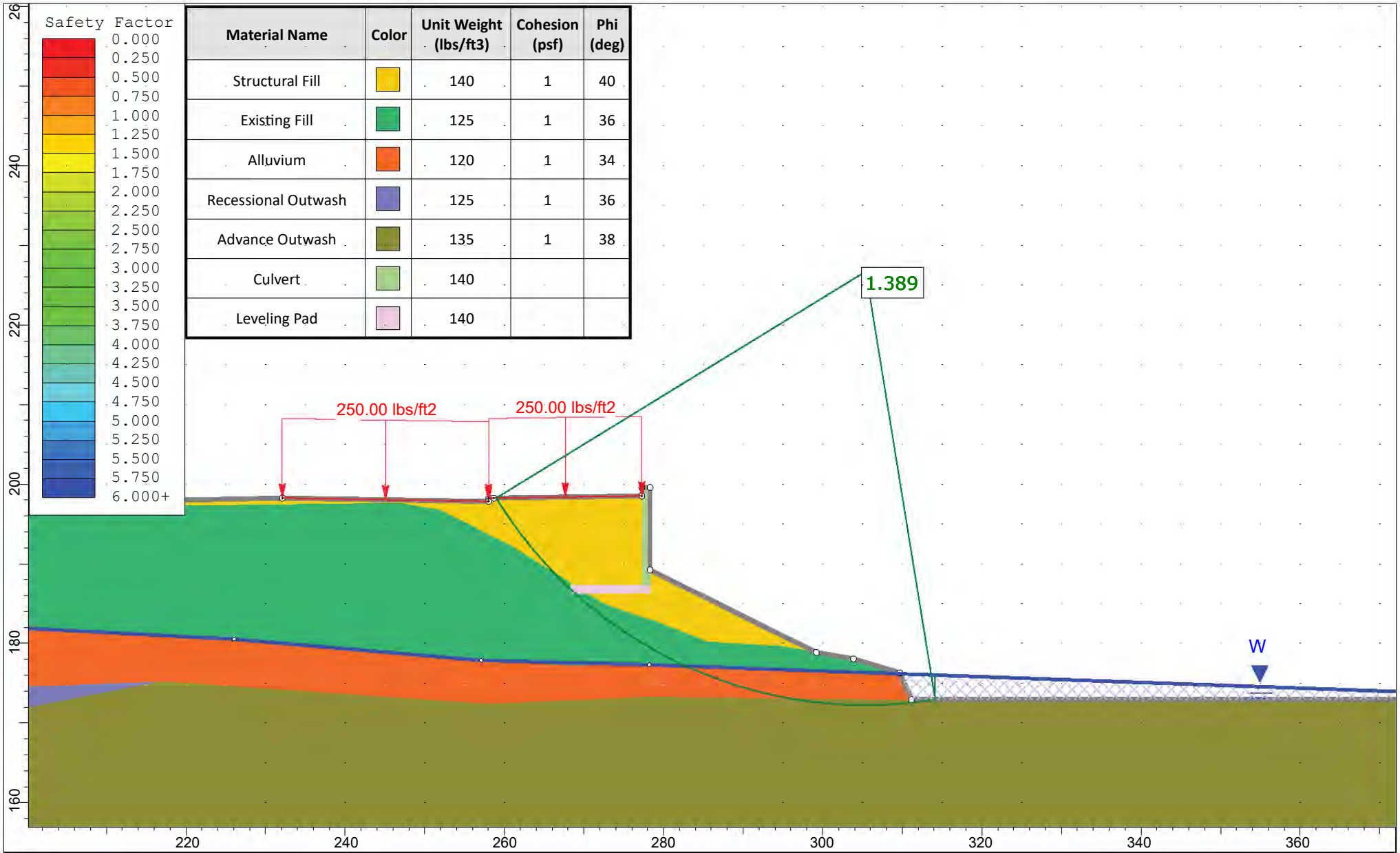

Material Name	Color	Unit Weight (lbs/ft3)	Cohesion (psf)	Phi (deg)
Structural Fill		140	1	40
Existing Fill		125	1	36
Alluvium		120	1	34
Recessional Outwash		125	1	36
Advance Outwash		135	1	38
Culvert		140		
Leveling Pad		140		

HWA GEOSCIENCES INC.
DBE/MWBE

SLIDEINTERPRET 8.029

Project	Figure F-3 - Cedar Creek - 4th Lift - STA 10+20 to STA 10+31		
Analysis Description	Global Slope Stability Analysis - Without Improvements		
Drawn By	SKS	Scale 1:200	Company HWA GeoSciences, Inc.
Date	1/24/2020		Loading Scenario Static Analysis

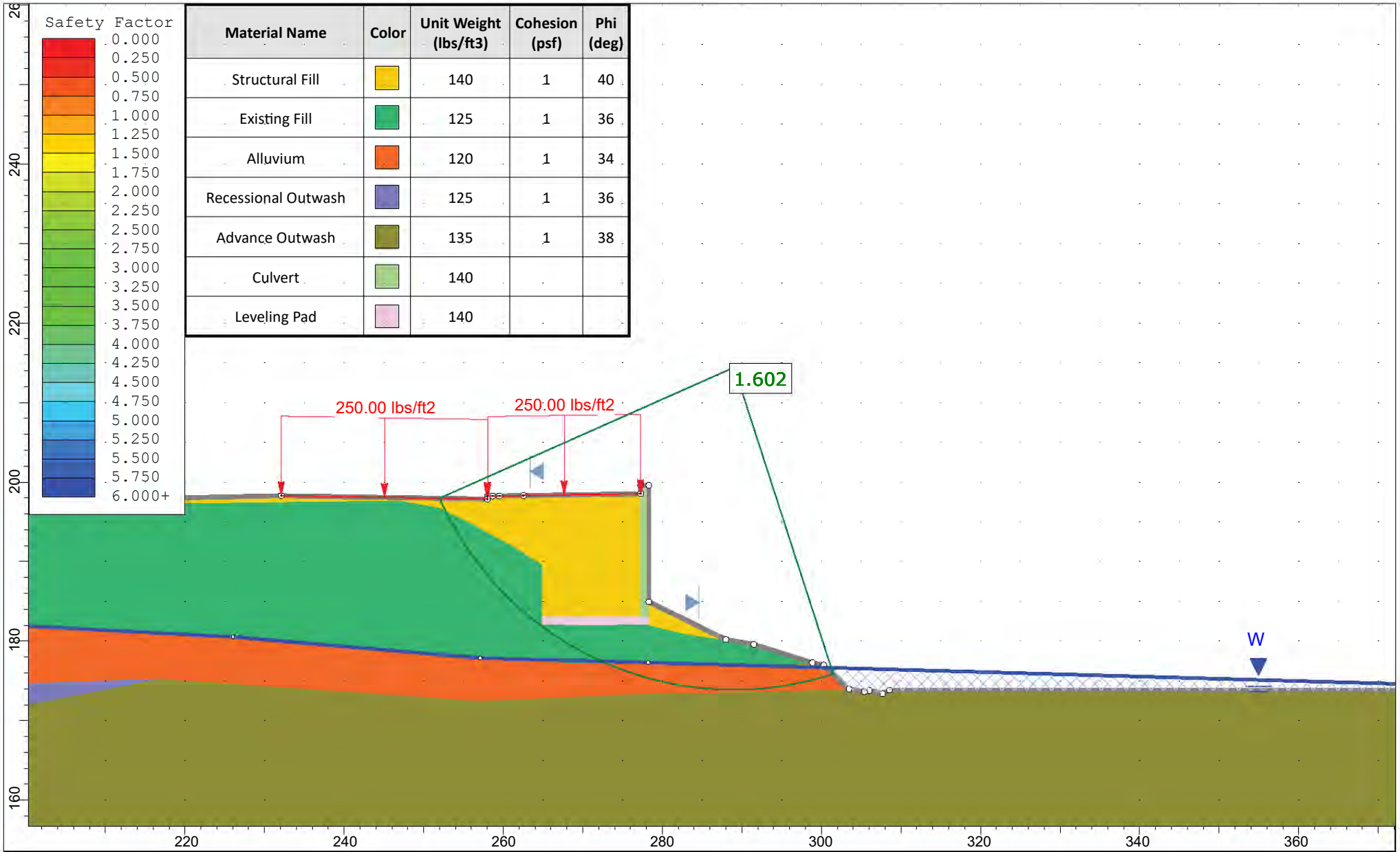

Material Name	Color	Unit Weight (lbs/ft3)	Cohesion (psf)	Phi (deg)
Structural Fill		140	1	40
Existing Fill		125	1	36
Alluvium		120	1	34
Recessional Outwash		125	1	36
Advance Outwash		135	1	38
Culvert		140		
Leveling Pad		140		

HWA GEOSCIENCES INC.
DBE/MWBE

SLIDEINTERPRET 8.029

Project	Figure F-4 - Cedar Creek - 3rd Lift - STA 10+31 to STA 10+41		
Analysis Description	Global Slope Stability Analysis - Without Improvements		
Drawn By	SKS	Scale 1:200	Company HWA GeoSciences, Inc.
Date	1/24/2020		Loading Scenario Static Analysis

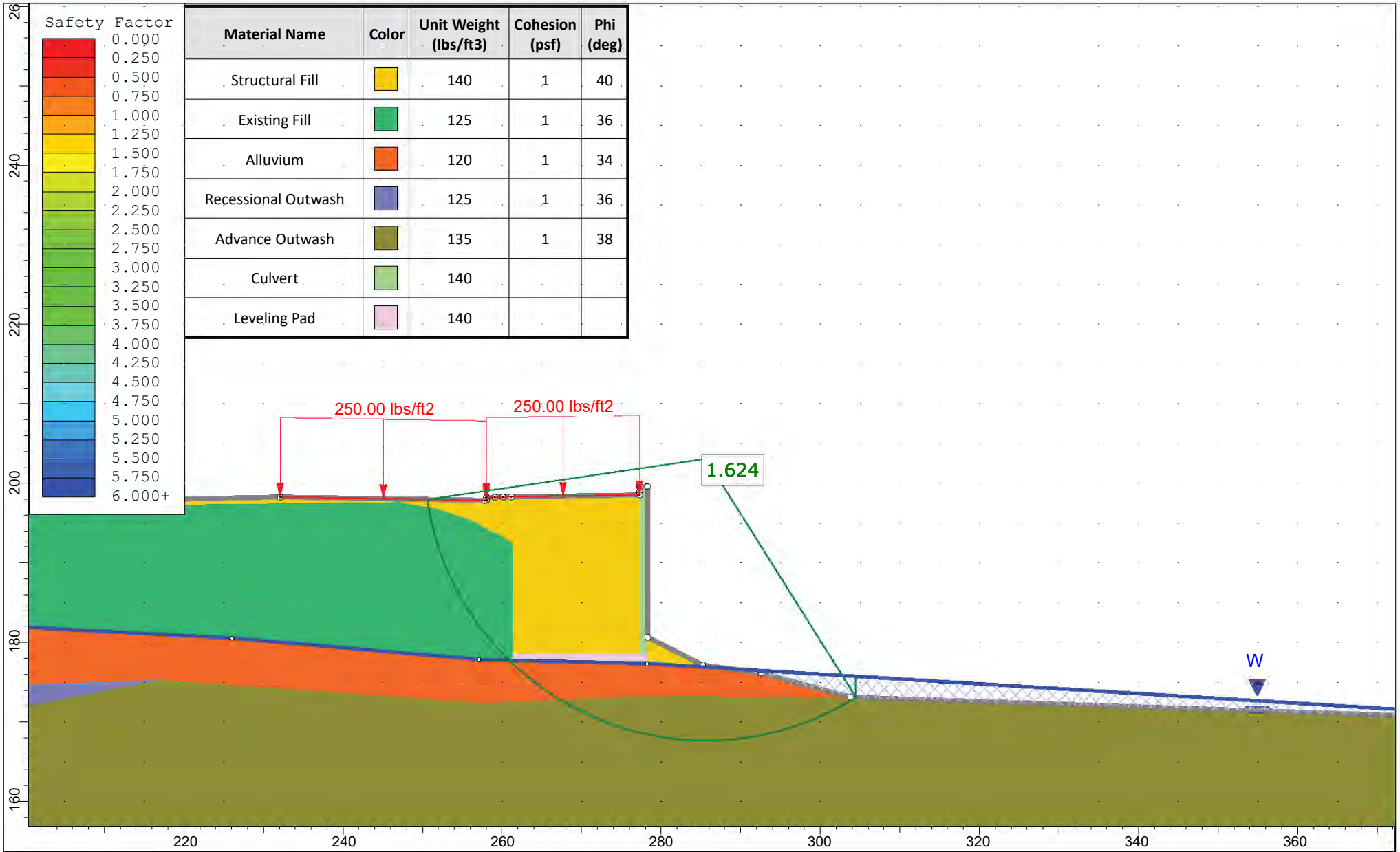

Material Name	Color	Unit Weight (lbs/ft3)	Cohesion (psf)	Phi (deg)
Structural Fill		140	1	40
Existing Fill		125	1	36
Alluvium		120	1	34
Recessional Outwash		125	1	36
Advance Outwash		135	1	38
Culvert		140		
Leveling Pad		140		

HWA GEOSCIENCES INC.
DBE/MWBE

SLIDEINTERPRET 8.029

Project	Figure F-5 - Cedar Creek - 2nd Lift - STA 10+41 to STA 10+52		
Analysis Description	Global Slope Stability Analysis - Without Improvements		
Drawn By	SKS	Scale 1:200	Company HWA GeoSciences, Inc.
Date	1/24/2020		Loading Scenario Static Analysis

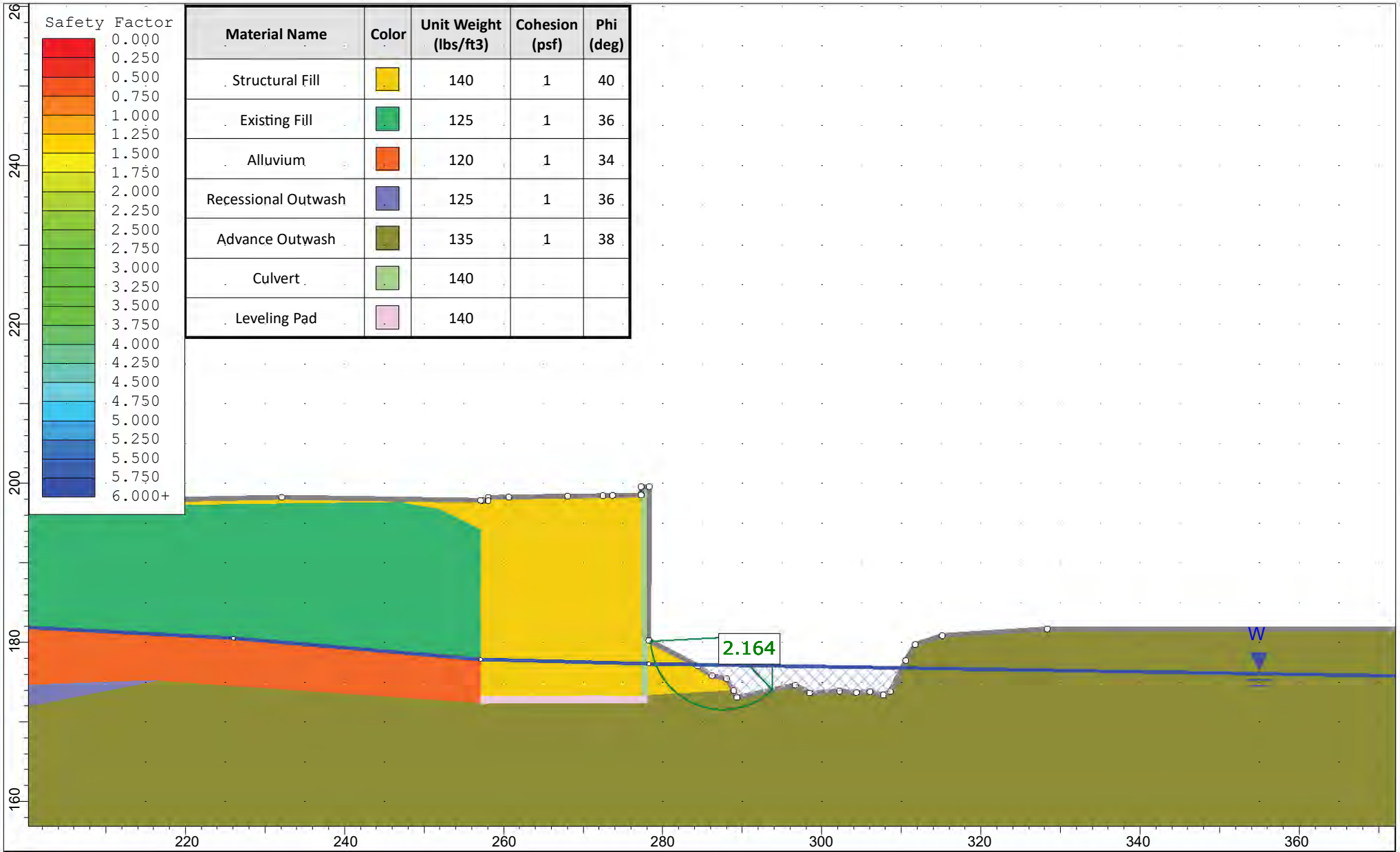

Material Name	Color	Unit Weight (lbs/ft3)	Cohesion (psf)	Phi (deg)
Structural Fill		140	1	40
Existing Fill		125	1	36
Alluvium		120	1	34
Recessional Outwash		125	1	36
Advance Outwash		135	1	38
Culvert		140		
Leveling Pad		140		

HWA GEOSCIENCES INC.
DBE/MWBE

SLIDEINTERPRET 8.029

Project	Figure F-6 - Cedar Creek - 1st Lift - STA 10+52 to STA 10+87		
Analysis Description	Global Slope Stability Analysis - Without Improvements		
Drawn By	SKS	Scale 1:200	Company HWA GeoSciences, Inc.
Date	1/24/2020		Loading Scenario Static Analysis

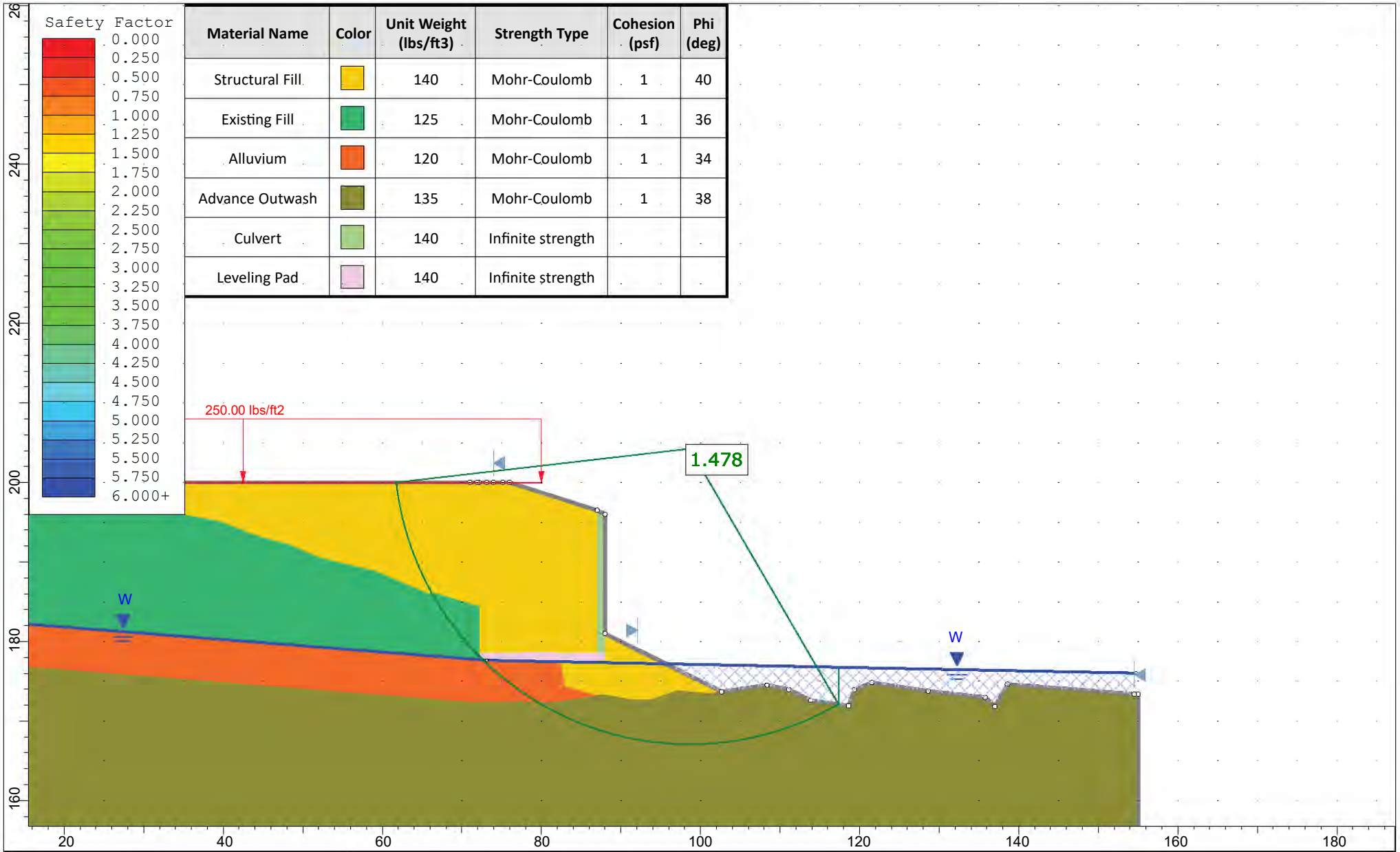

Material Name	Color	Unit Weight (lbs/ft3)	Strength Type	Cohesion (psf)	Phi (deg)
Structural Fill		140	Mohr-Coulomb	1	40
Existing Fill		125	Mohr-Coulomb	1	36
Alluvium		120	Mohr-Coulomb	1	34
Advance Outwash		135	Mohr-Coulomb	1	38
Culvert		140	Infinite strength		
Leveling Pad		140	Infinite strength		

HWA GEOSCIENCES INC.
DBE/MWBE

SLIDEINTERPRET 8.029

Project	Figure F-7 - Cedar Creek - 2nd Lift - STA 10+87 to STA 10+98		
Analysis Description	Global Slope Stability Analysis - Without Improvements		
Drawn By	SKS	Scale 1:200	Company HWA GeoSciences, Inc.
Date	12/9/19		Loading Scenario Static Analysis

APPENDIX E

EASEMENTS

"EXHIBIT "A"

Owner: Richard A. Wolfstone Trust

Parcel No. 233530-0130

Abbrev Legal:

LOT 3 KCSP 181048 REC NO. 8112040582 IN NW QTR OF NW QTR SEC 20 TWP 26N R 5E W.M.

Property Legal Description:

Lot 3 of King County Short Plat No. 181048, recorded under Auditor's File No. 8112040582, being a portion of the following described property: Lot 13, Emily Park, according to the Plat recorded in Volume 116 of Plats, Pages 69, 70, and 71, in King County, Washington.

Temporary Construction Easement Legal Description:

That portion of the above-described real property further described as follows:

Beginning at the Southwest corner of said property, said corner being a point on the easterly margin of, and measuring 50.00 feet perpendicular from the centerline of, 100th Avenue N.E.;

Thence departing said easterly margin, North 69˚44'20" East, along the northwesterly line of said property, 95.00 feet;

Thence departing said northwesterly line South 39˚20'57" East` 44.62 feet to the South line of said property;

Thence North 89˚12'52" West along said South line 117.43 feet to said Southwest corner and the Point of Beginning;

(Contains 2,003± square feet)

EXHIBIT "B"

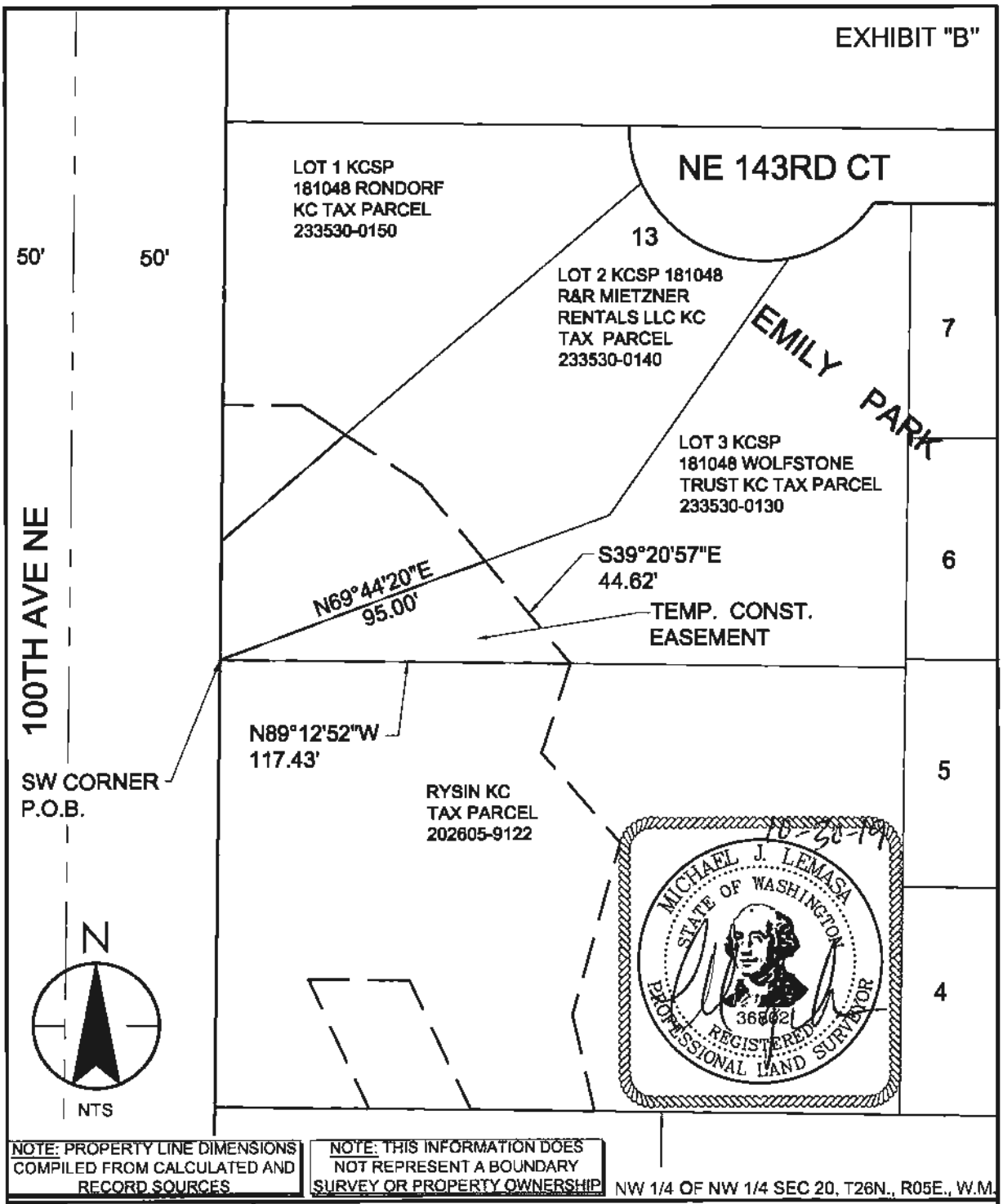

NOTE: PROPERTY LINE DIMENSIONS COMPILED FROM CALCULATED AND RECORD SOURCES

NOTE: THIS INFORMATION DOES NOT REPRESENT A BOUNDARY SURVEY OR PROPERTY OWNERSHIP

NW 1/4 OF NW 1/4 SEC 20, T26N., R05E., W.M.

Stantec
11130 NE 33rd Place,
Bellevue WA 98004
phone: (425) 869-9448

CITY OF KIRKLAND

CEDAR CREEK CULVERT REPLACEMENT

TEMPORARY CONSTRUCTION EASEMENT

WOLFSTONE TRUST PARCEL # 233530-0130

SCALE	PLOTTING DATE	DRAWN	FILE PATH	CHECKED
NTS	10/29/2019	IMM/MJL	V:\2002\1817190451.\..esmt	MJL

"EXHIBIT "A"

Owner: VILLA JUANITA, A CONDOMINIUM

Parcel No. 894395-0000

Abbrev Legal:

VILLA JUANITA CONDO, VOL 189 OF CONDOS, PP 91-99, IN NE QTR OF NE QTR SEC 19 TWP 26N R5E W.M.

Property Legal Description:

Villa Juanita, A Condominium, according to the declaration thereof, and any amendments thereto, per survey map and plans recorded in Volume 189 of Condominiums, Pages 91 through 99 inclusive, and any amendments thereto, in King County, Washington;

Situate in City of Kirkland, King County, Washington.

Temporary Construction Easement Legal Description:

That portion of the above-described real property further described as follows:

Beginning at the Southeast corner of said property, said corner being a point on the westerly margin of, and measuring 50.00 feet perpendicular from the centerline of, 100th Avenue N.E.;

Thence North 0°45'38" East, along said westerly margin, 62.00 feet;

Thence departing said westerly margin North 89°14'22" West, perpendicular to said margin, 43.00 feet;

Thence South 0°45'38" West 17.00 feet;

Thence North 89°14'22" West 265.00 feet;

Thence South 69°00'47" West 93.52 feet to a point on the South line of said property;

Thence South 87°44'17" East, along said South line, 395.00 feet to said Southeast corner and the Point of Beginning.

(Contains 14,952± square feet, 0.34Ac.)

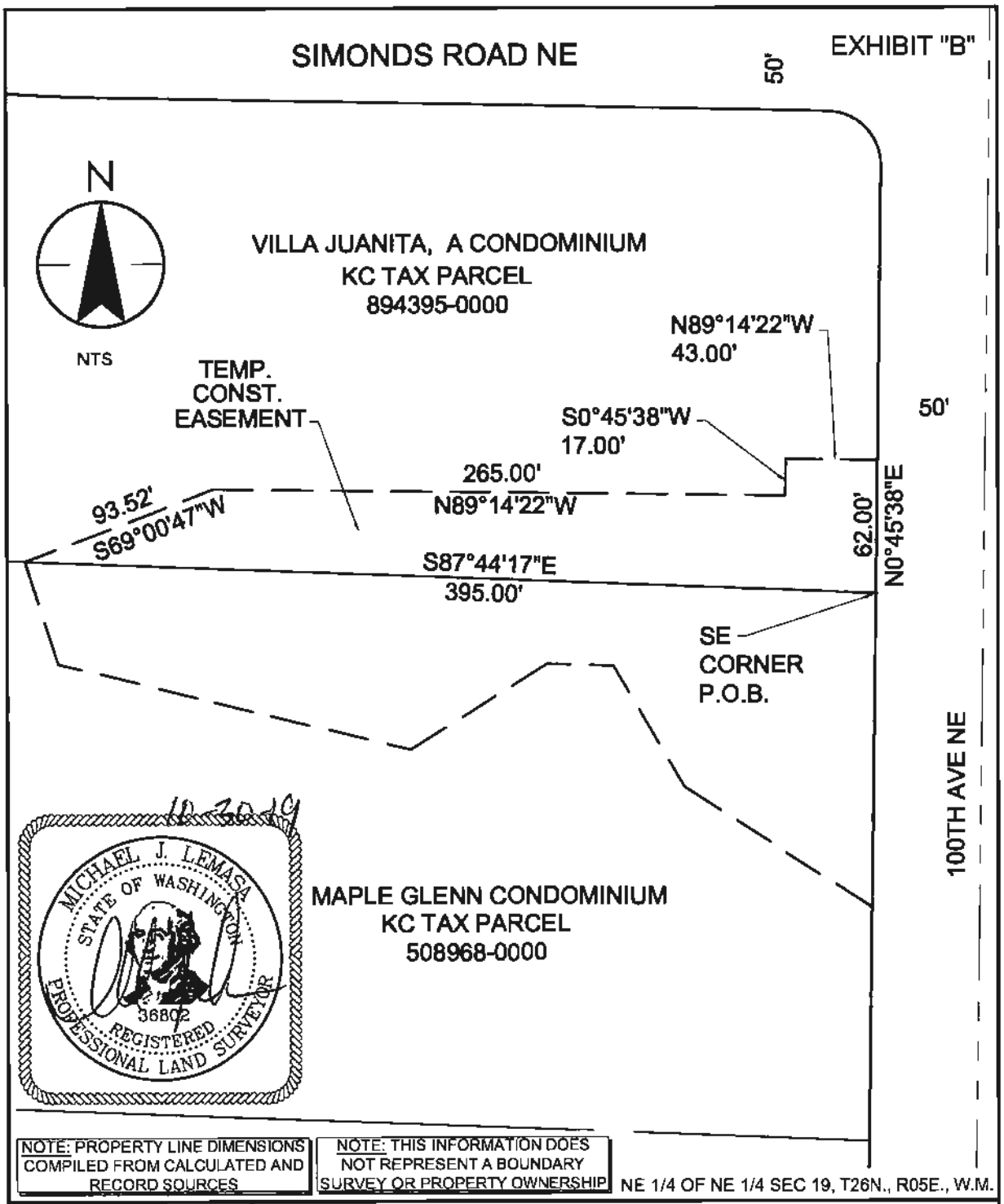

Stantec
11130 NE 33rd Place,
Bellevue WA 98004
phone: (425) 869-9448

CITY OF KIRKLAND

CEDAR CREEK CULVERT REPLACEMENT

TEMPORARY CONSTRUCTION EASEMENT

VILLA JUANITA, A CONDOMINIUM PARCEL # 894395-0000

SCALE	PLOTTING DATE	DRAWN	FILE PATH	CHECKED
NTS	10/29/2019	IMM/MJL	V:\2002\1817190451.\..esmt	MJL

"EXHIBIT "A"

Owner: Igor Rysin and Elena Rysin

Parcel No. 202605-9122

Abbrev Legal:

S 150 FT OF W 280 FT OF S HALF OF SW QTR OF NW QTR OF NW QTR SEC 20 TWP 26N R 5E W.M.

Property Legal Description:

The South 150 feet of the West 280 feet of the South half of the Southwest quarter of the Northwest quarter of the Northwest quarter, Section 20, Township 26 North, Range 5 East, Willamette Meridian, in King County, Washington;

EXCEPT That portion conveyed to King County for road purposes under Recording No. 5384426.

Temporary Construction Easement Legal Description:

That portion of the above-described real property further described as follows:

Beginning at the Northwest corner of said property, said corner being a point on the easterly margin of, and measuring 50.00 feet perpendicular from the centerline of, 100th Avenue N.E.;

Thence South 0°45'38" West, along said easterly margin, 150.00 feet to the Southwest corner of said property;

Thence South 89°12'52" East, along the South line of said property, 127.30 feet;

Thence departing said South line North 12°49'42" West 33.00 feet;

Thence North 15°36'12" East 60.00 feet;

Thence North 41°12'14" West 40.00 feet;

Thence North 17°48'58" East 31.58 feet to the North line of said property;

Thence North 89°12'52" West along said North line 117.43 feet to said Northwest corner and the Point of Beginning.

(18,357± square feet, 0.42Ac.)

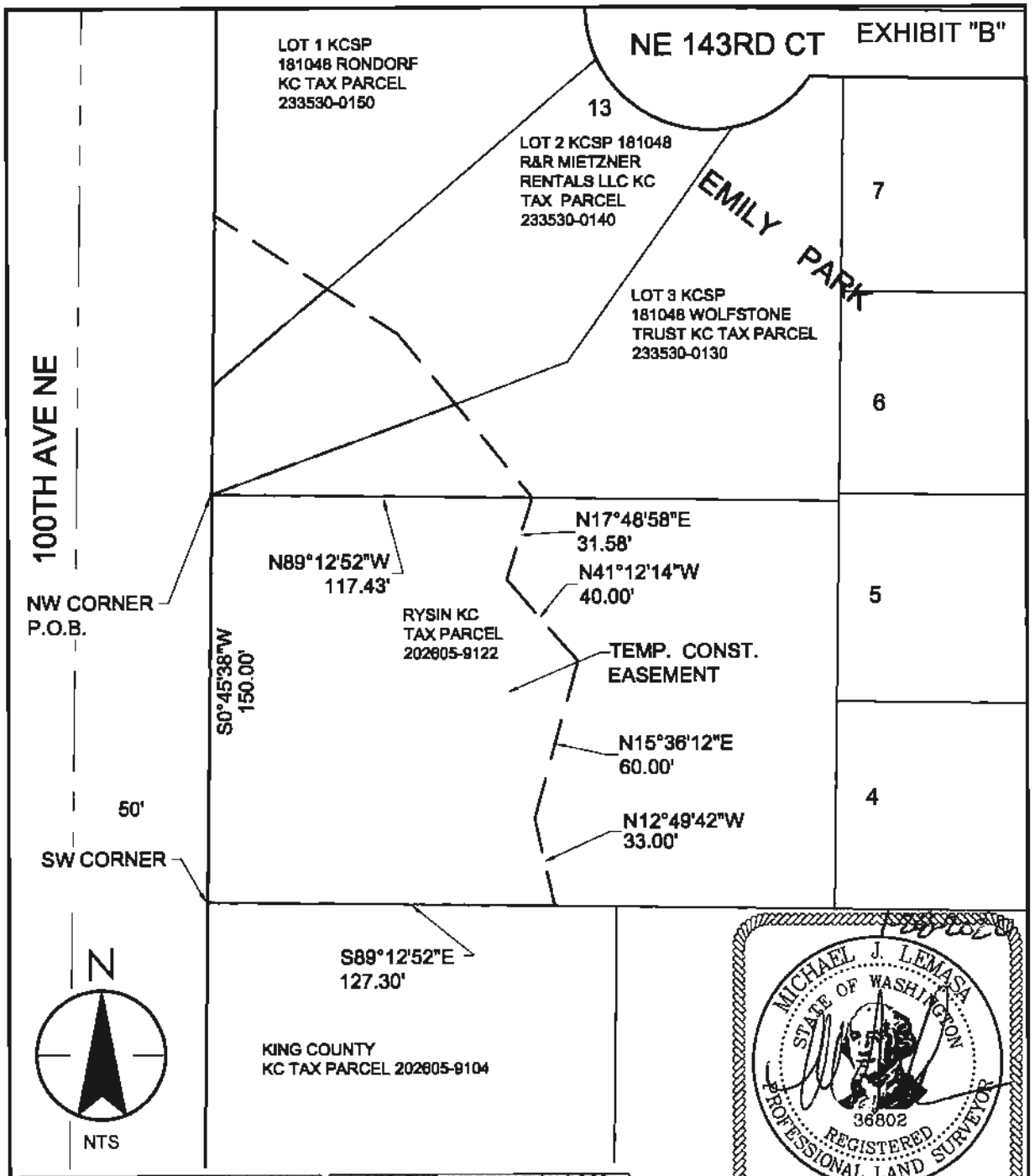

NOTE: PROPERTY LINE DIMENSIONS COMPILED FROM CALCULATED AND RECORD SOURCES

NOTE: THIS INFORMATION DOES NOT REPRESENT A BOUNDARY SURVEY OR PROPERTY OWNERSHIP

NW 1/4 OF NW 1/4 SEC 20, T26N., R05E., W.M.

Stantec
11130 NE 33rd Place,
Bellevue WA 98004
phone: (425) 869-9448

CITY OF KIRKLAND

CEDAR CREEK CULVERT REPLACEMENT

TEMPORARY CONSTRUCTION EASEMENT

RYSIN PARCEL # 202605-9122

SCALE	PLOTTING DATE	DRAWN	FILE PATH	CHECKED
NTS	1/27/2020	IMM/MJL	V:\2002\1817190451.\..esmt	MJL

"EXHIBIT "A"

Owner: Kip D. Rondorf

Parcel No. 233530-0150

Abbrev Legal:

LOT 1 KCSP 181048 REC NO. 8112040582 IN NW QTR OF NW QTR SEC 20 TWP 26N R 5E W.M.

Property Legal Description:

Lot 1 of King County Short Plat No. 181048, recorded under Auditor's File No. 8112040582, being a portion of the following described property: Lot 13, Emily Park, according to the Plat recorded in Volume 116 of Plats, Pages 69, 70, and 71, in King County, Washington.

Temporary Construction Easement Legal Description:

That portion of the above-described real property further described as follows:

Beginning at the Southwest corner of said property, said corner being a point on the easterly margin of, and measuring 50.00 feet perpendicular from the centerline of, 100th Avenue N.E.;

Thence North 0°45'38" East, along said easterly margin, 62.73 feet;

Thence departing said easterly margin South 56°34'01" East 49.24 feet to the southeasterly line of said property;

Thence South 49°39'43" West, along said southeasterly line, 55.00 feet to said Southwest corner and the Point of Beginning.

(Contains 683± net square feet)
(1,300± square feet - 617± perm esmt. square feet)

EXHIBIT "B"

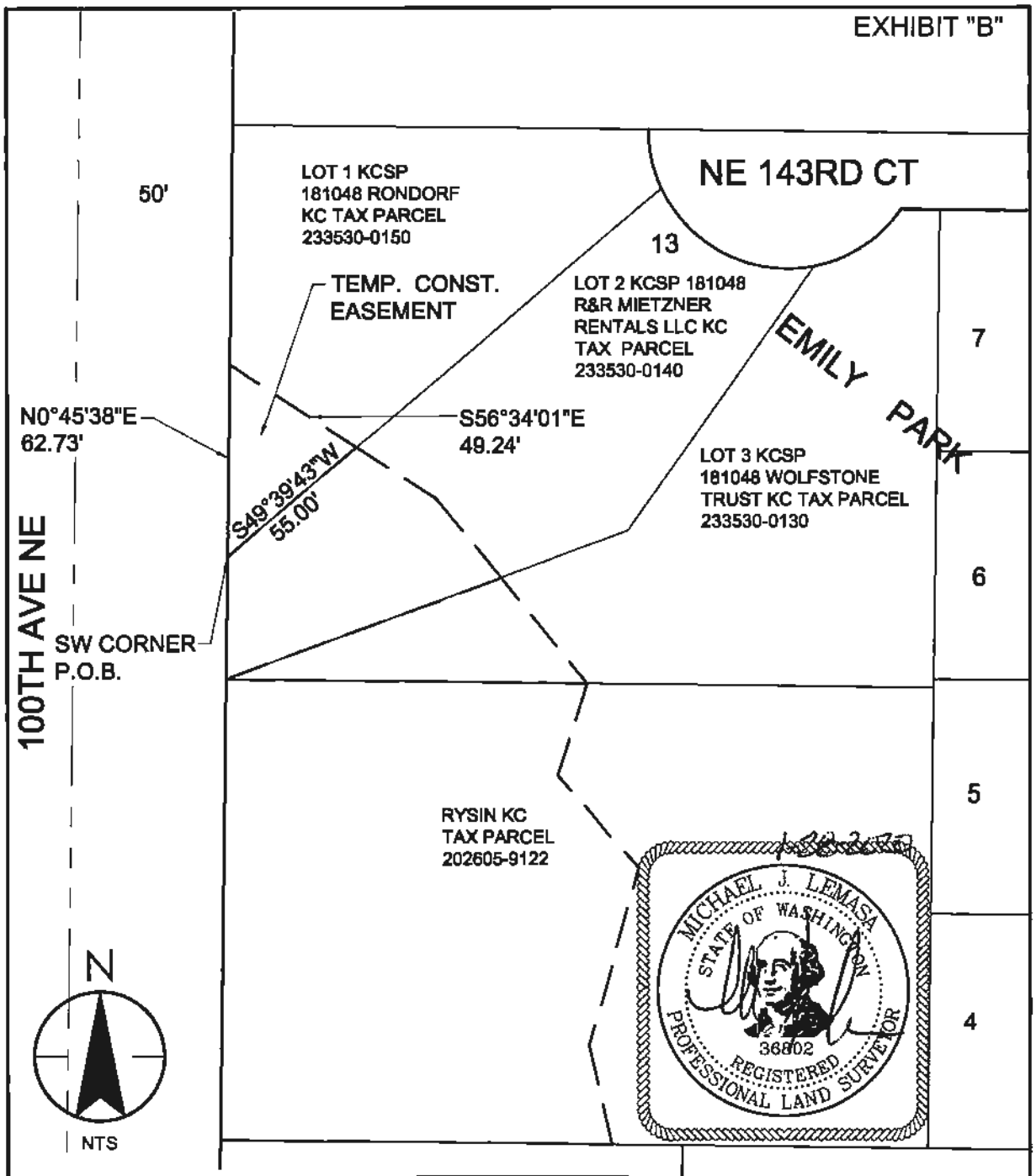

NOTE: PROPERTY LINE DIMENSIONS COMPILED FROM CALCULATED AND RECORD SOURCES

NOTE: THIS INFORMATION DOES NOT REPRESENT A BOUNDARY SURVEY OR PROPERTY OWNERSHIP

NW 1/4 OF NW 1/4 SEC 20, T26N., R05E., W.M.

Stantec
11130 NE 33rd Place,
Bellevue WA 98004
phone: (425) 869-9448

CITY OF KIRKLAND

CEDAR CREEK CULVERT REPLACEMENT

TEMPORARY CONSTRUCTION EASEMENT

RONDORF PARCEL # 233530-0150

SCALE	PLOTTING DATE	DRAWN	FILE PATH	CHECKED
NTS	1/27/2019	IMM/MJL	V:\2002\1817190451.\..esmt	MJL

"EXHIBIT "A"

Owner: R&R Mietzner Rentals LLC

Parcel No. 233530-0140

Abbrev Legal:

LOT 2 KCSP 181048 REC NO. 8112040582 IN NW QTR OF NW QTR SEC 20 TWP 26N R 5E W.M.

Property Legal Description:

Lot 2 of King County Short Plat No. 181048, recorded under Auditor's File No. 8112040582, being a portion of the following described property: Lot 13, Emily Park, according to the Plat recorded in Volume 116 of Plats, Pages 69, 70, and 71, in King County, Washington.

Temporary Construction Easement Legal Description:

That portion of the above-described real property further described as follows:

Beginning at the Southwest corner of said property, said corner being a point on the easterly margin of, and measuring 50.00 feet perpendicular from the centerline of, 100th Avenue N.E.;

Thence South 0°45'38" West, along said easterly margin, 40.00 feet to the most southerly corner of said property;

Thence departing said easterly margin, North 69°44'20" East, along the southeasterly line of said property, 95.00 feet;

Thence departing said southeasterly line North 39°20'57" West 33.52 feet;

Thence North 56°34'01" West 30.45 feet to the northwesterly line of said property;

Thence South 49°39'43" West, along said northwesterly line, 55.00 feet to said Southwest corner and the Point of Beginning.

(Contains 2,995± net square feet)
(3,650± square feet – 655 square feet perm esmt)

EXHIBIT "B"

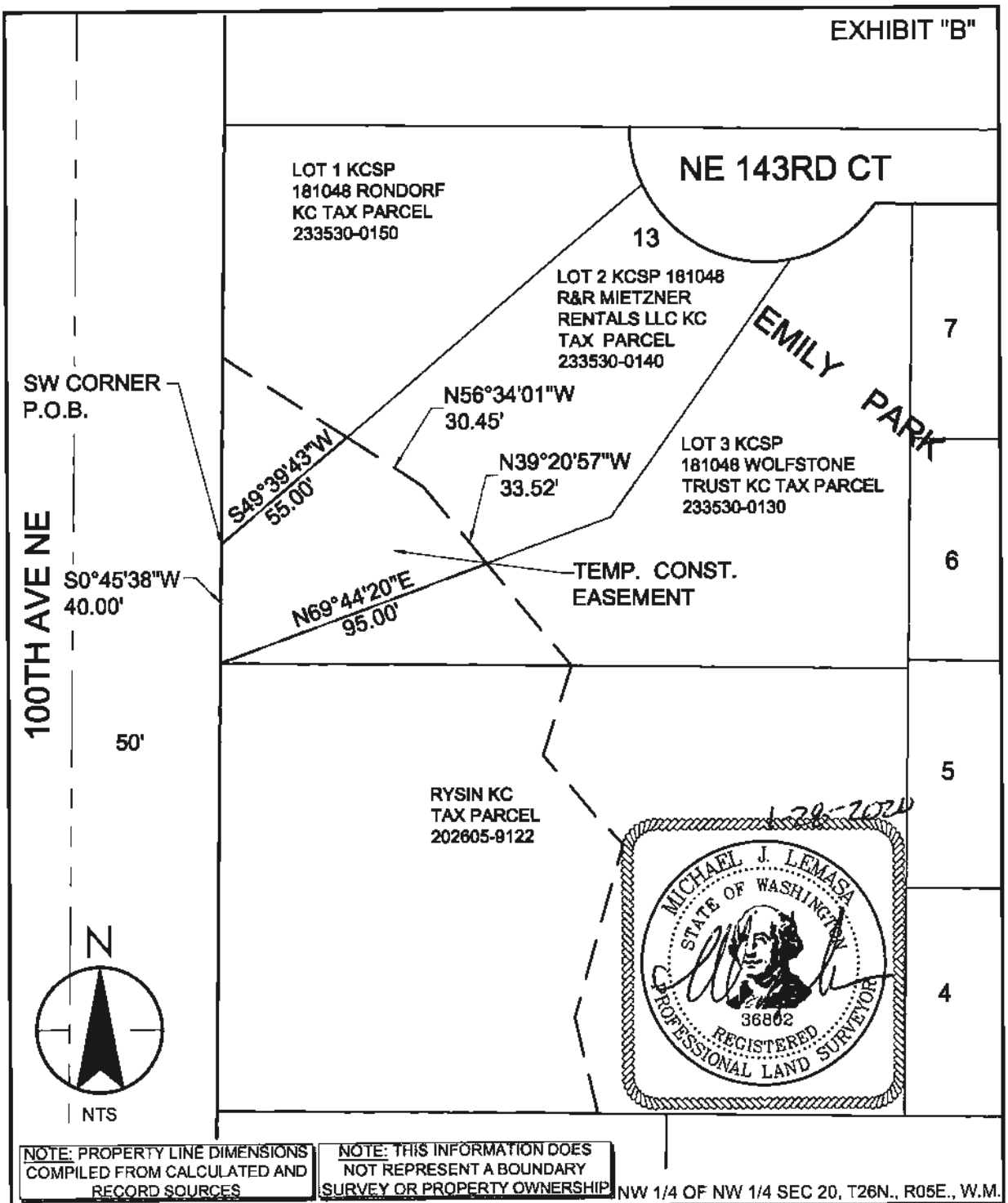

NOTE: PROPERTY LINE DIMENSIONS COMPILED FROM CALCULATED AND RECORD SOURCES

NOTE: THIS INFORMATION DOES NOT REPRESENT A BOUNDARY SURVEY OR PROPERTY OWNERSHIP

NW 1/4 OF NW 1/4 SEC 20, T26N., R05E., W.M.

Stantec
11130 NE 33rd Place,
Bellevue WA 98004
phone: (425) 869-9448

CITY OF KIRKLAND

CEDAR CREEK CULVERT REPLACEMENT

TEMPORARY CONSTRUCTION EASEMENT

R&R MIETZNER RENTALS LLC PARCEL # 233530-0140

SCALE	PLOTTING DATE	DRAWN	FILE PATH	CHECKED
NTS	1/27/2020	IMM/MJL	V:\2002\1817190451.\..esmt	MJL

"EXHIBIT "A"

Owner: MAPLE GLENN A CONDOMINIUM

Parcel No. 508968-0000

Abbrev Legal:

MAPLE GLENN CONDO, VOL 189 OF CONDOS, PP 91-99, IN NE QTR OF NE QTR SEC 19 TWP 26N R5E W.M.

Property Legal Description:

Maple Glenn, A Condominium, according to the declaration thereof, and any amendments thereto, per Amended Survey Map and Plans recorded in Volume 120 of Condominiums, Pages 43 through 47 inclusive, and any amendments thereto, in King County, Washington;

Situate in City of Kirkland, King County, Washington.

Temporary Construction Easement Legal Description:

That portion of the above-described real property further described as follows:

Beginning at the Northeast corner of said property, said corner being a point on the westerly margin of, and measuring 50.00 feet perpendicular from the centerline of, 100th Avenue N.E.

Thence South 0˚45'38" West, along said westerly margin, 146.00 feet;

Thence departing said westerly margin North 57˚13'59" West 103.97 feet;

Thence North 29°57'24" East 65.00 feet;

Thence North 88˚15'31" West 31.00 feet;

Thence South 58˚02'26" West 75.00 feet;

Thence North 76˚11'46" West 168.00 feet;

Thence North 17˚35'09" West 50.00 feet; to a point on the North line of said property;

Thence South 87˚44'17" East, along said North line, 395.00 feet to said Northeast corner and the Point of Beginning.

(Contains 22,819± square feet, 0.65Ac.)

EXHIBIT "B"

SIMONDS ROAD NE

50'

N

NTS

VILLA JUANITA, A CONDOMINIUM
KC TAX PARCEL
894395-0000

S87°44'17"E 395.00'

N17°35'09"W
50.00'

TEMP.
CONST.
EASEMENT

NE CORNER
P.O.B.

N76°11'46"W
168.00'

S58°02'26"W
75.00'

N29°57'24"W
65.00'

N88°15'31"W
31.00'

146.00'

S0°45'38"W

N57°13'59"W
103.97'

100TH AVE NE

MAPLE GLENN CONDOMINIUM
KC TAX PARCEL
508968-0000

50'

MICHAEL J. LEMASA
STATE OF WASHINGTON
36802
REGISTERED
PROFESSIONAL LAND SURVEYOR

NOTE: PROPERTY LINE DIMENSIONS COMPILED FROM CALCULATED AND RECORD SOURCES

NOTE: THIS INFORMATION DOES NOT REPRESENT A BOUNDARY SURVEY OR PROPERTY OWNERSHIP

NE 1/4 OF NE 1/4 SEC 19, T26N., R05E., W.M.

Stantec
11130 NE 33rd Place,
Bellevue WA 98004
phone: (425) 869-9448

CITY OF KIRKLAND

CEDAR CREEK CULVERT REPLACEMENT

TEMPORARY CONSTRUCTION EASEMENT

MAPLE GLENN A CONDOMINIUM PARCEL # 508968-0000

SCALE	PLOTTING DATE	DRAWN	FILE PATH	CHECKED
NTS	10/29/2019	IMM/MJL	V:\2002\1817190451.\..esmt	MJL

"EXHIBIT "A"

Owner: Kip D. Rondorf

Parcel No. 233530-0150

Abbrev Legal:

LOT 1 KCSP 181048 REC NO. 8112040582 IN NW QTR OF NW QTR SEC 20 TWP 26N R 5E W.M.

Property Legal Description:

Lot 1 of King County Short Plat No. 181048, recorded under Auditor's File No. 8112040582, being a portion of the following described property: Lot 13, Emily Park, according to the Plat recorded in Volume 116 of Plats, Pages 69, 70, and 71, in King County, Washington.

Permanent Easement Legal Description:

That portion of the above-described real property further described as follows:

Beginning at the Southwest corner of said property, said corner being a point on the easterly margin of, and measuring 50.00 feet perpendicular from the centerline of, 100th Avenue N.E.;

Thence North 49°39'43" East, along the southeasterly line of said property, 55.00 feet;

Thence departing said southeasterly line North 56°34'01" West 13.54 feet;

Thence South 49°39'43" West, parallel with said southeasterly line, 39.88 feet to said easterly margin;

Thence South 0°45'38" West, along said easterly margin, 17.25 feet to said Southwest corner and the Point of Beginning.

(Contains 617± net square feet)

EXHIBIT "B"

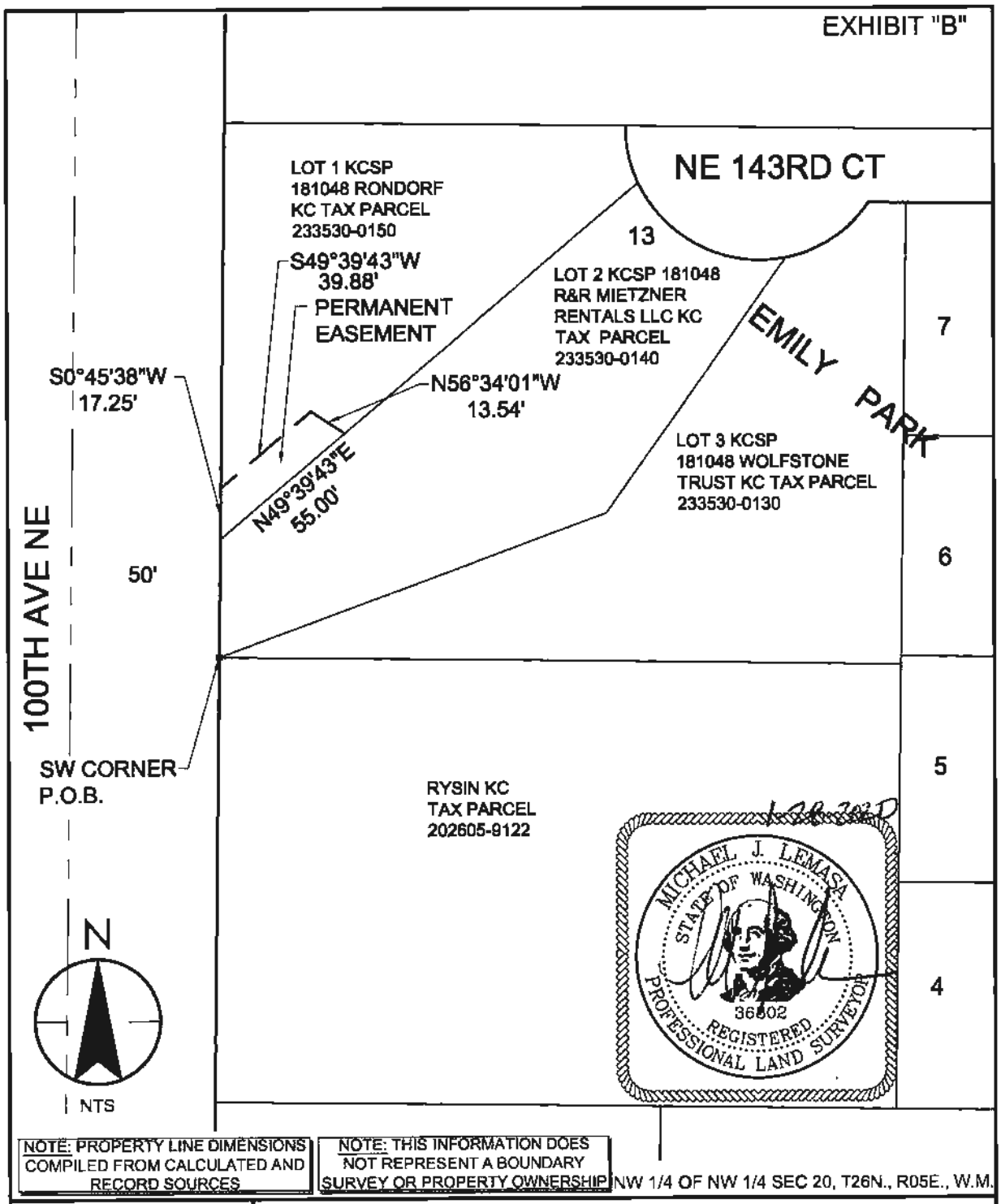

NOTE: PROPERTY LINE DIMENSIONS COMPILED FROM CALCULATED AND RECORD SOURCES

NOTE: THIS INFORMATION DOES NOT REPRESENT A BOUNDARY SURVEY OR PROPERTY OWNERSHIP

NW 1/4 OF NW 1/4 SEC 20, T26N., R05E., W.M.

Stantec
11130 NE 33rd Place,
Bellevue WA 98004
phone: (425) 869-9448

CITY OF KIRKLAND

CEDAR CREEK CULVERT REPLACEMENT

PERMANENT EASEMENT

RONDORF PARCEL # 233530-0150

SCALE	PLOTTING DATE	DRAWN	FILE PATH	CHECKED
NTS	1/27/2020	IMM/MJL	V:\2002\1817190451.\..esmt	MJL

"EXHIBIT "A"

Owner: R&R Mietzner Rentals LLC

Parcel No. 233530-0140

Abbrev Legal:

LOT 2 KCSP 181048 REC NO. 8112040582 IN NW QTR OF NW QTR SEC 20 TWP 26N R 5E W.M.

Property Legal Description:

Lot 2 of King County Short Plat No. 181048, recorded under Auditor's File No. 8112040582, being a portion of the following described property: Lot 13, Emily Park, according to the Plat recorded in Volume 116 of Plats, Pages 69, 70, and 71, in King County, Washington.

Permanent Easement Legal Description:

That portion of the above-described real property further described as follows:

> The West 15 feet of said property as measured perpendicular from, and lying adjacent to, the easterly margin of 100th Avenue N.E..
>
> (Contains 655± square feet)

EXHIBIT "B"

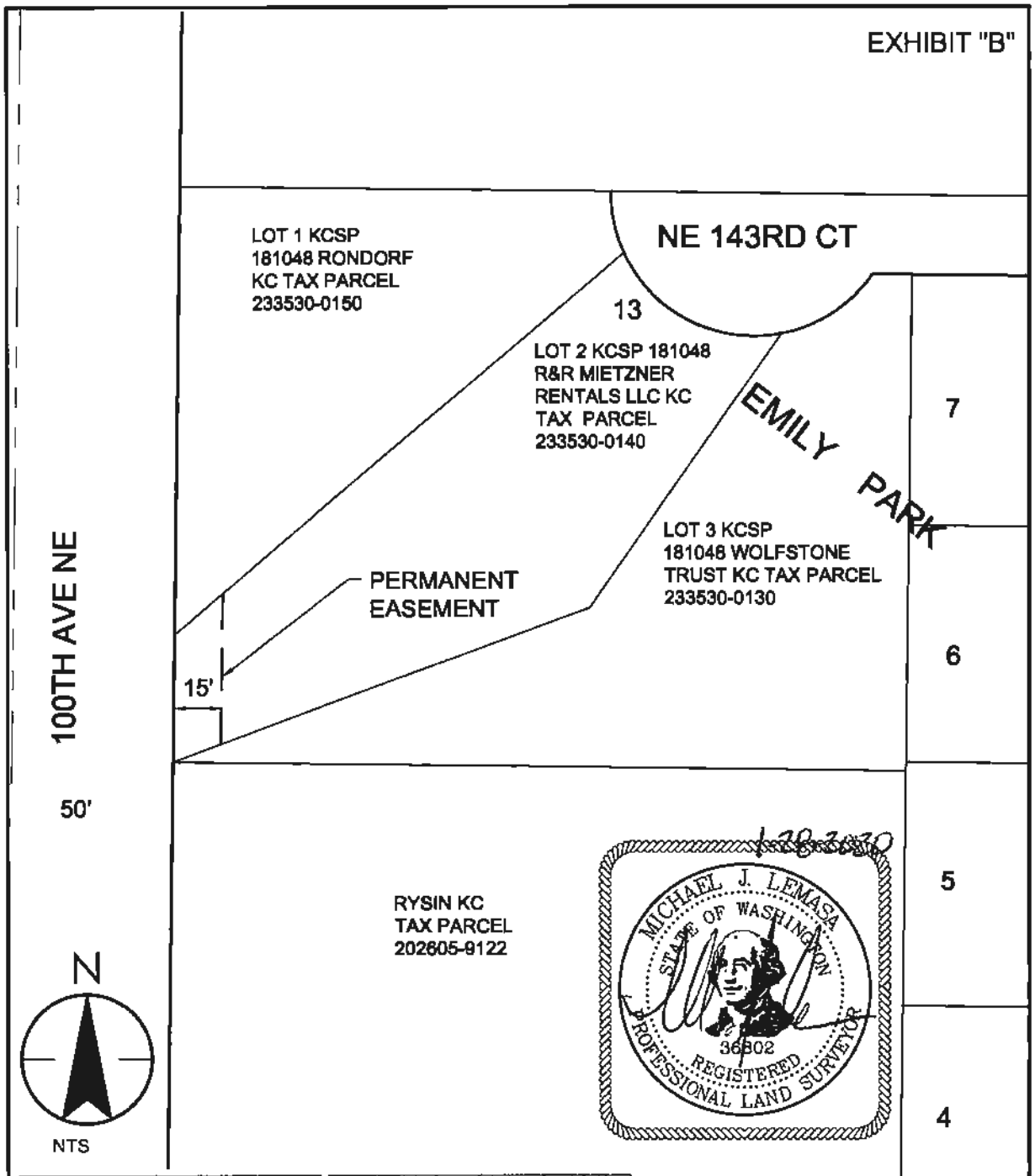

NOTE: PROPERTY LINE DIMENSIONS COMPILED FROM CALCULATED AND RECORD SOURCES

NOTE: THIS INFORMATION DOES NOT REPRESENT A BOUNDARY SURVEY OR PROPERTY OWNERSHIP

NW 1/4 OF NW 1/4 SEC 20, T26N., R05E., W.M.

Stantec
11130 NE 33rd Place,
Bellevue WA 98004
phone: (425) 869-9448

CITY OF KIRKLAND
CEDAR CREEK CULVERT REPLACEMENT
PERMANENT EASEMENT
R&R MIETZNER RENTALS LLC PARCEL # 233530-0140

SCALE	PLOTTING DATE	DRAWN	FILE PATH	CHECKED
NTS	1/27/2020	IMM/MJL	V:\2002\1817190451.\..esmt	MJL

"EXHIBIT "A"

Owner: MAPLE GLENN A CONDOMINIUM

Parcel No. 508968-0000

Abbrev Legal:

MAPLE GLENN CONDO, VOL 189 OF CONDOS, PP 91-99, IN NE QTR OF NE QTR SEC 19 TWP 26N R5E W.M.

Property Legal Description:

Maple Glenn, A Condominium, according to the declaration thereof, and any amendments thereto, per Amended Survey Map and Plans recorded in Volume 120 of Condominiums, Pages 43 through 47 inclusive, and any amendments thereto, in King County, Washington;

Situate in City of Kirkland, King County, Washington.

Permanent Easement Legal Description:

That portion of the above-described real property further described as follows:

Beginning at the Northeast corner of said property, said corner being a point on the westerly margin of, and measuring 50.00 feet perpendicular from the centerline of, 100th Avenue N.E.

Thence departing said westerly margin North 87°44'17" West, along the North line of said property, 50.02 feet;

Thence departing said North line South 0°45'38" West, parallel with said westerly margin, 107.04 feet;

Thence South 73°18'24" East 52.00 feet to said westerly margin;

Thence North 0°45'38" East, along said westerly margin, 120.00 feet to the Point of Beginning.

(Contains 5,676± square feet)

EXHIBIT "B"

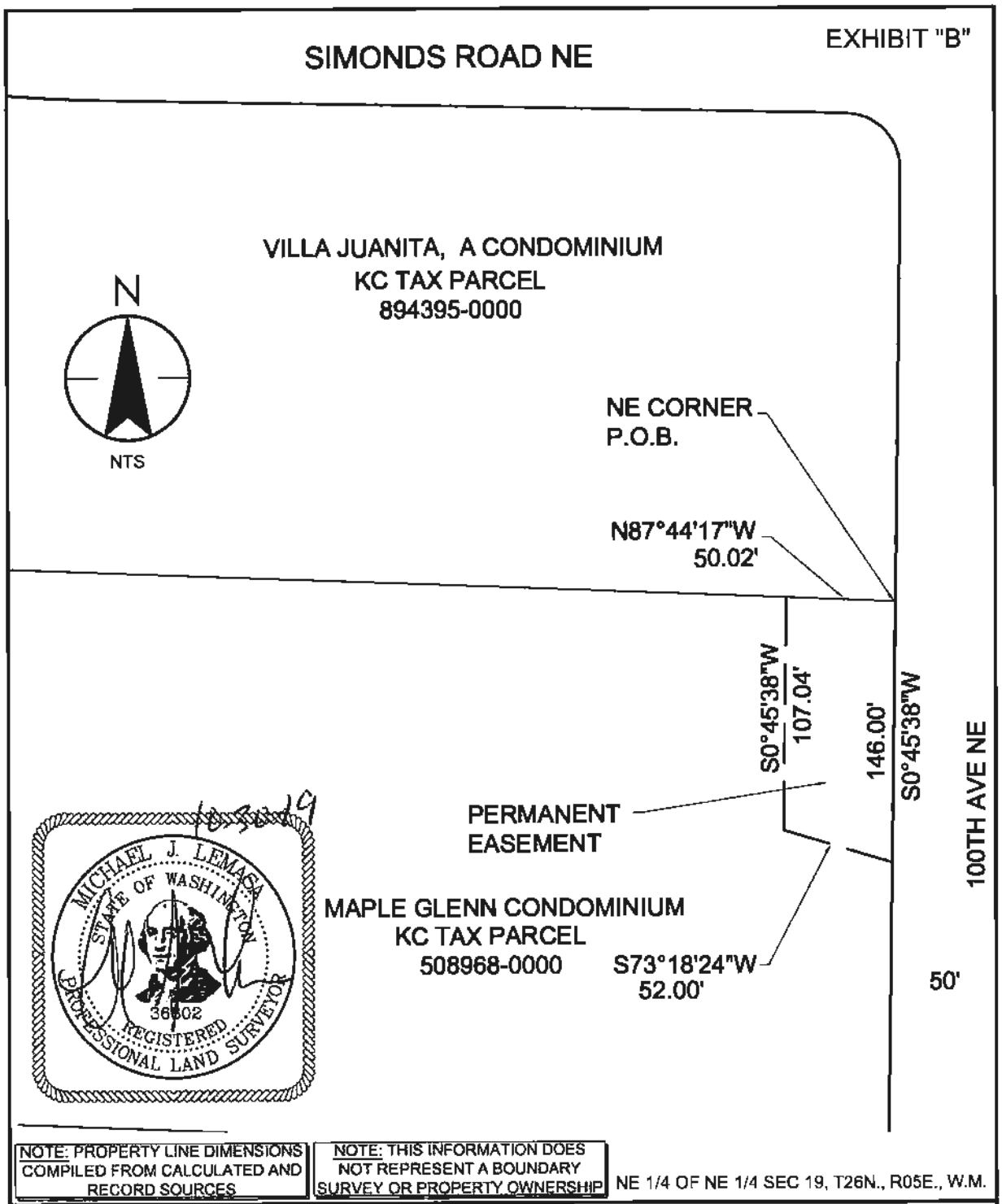

NOTE: PROPERTY LINE DIMENSIONS COMPILED FROM CALCULATED AND RECORD SOURCES

NOTE: THIS INFORMATION DOES NOT REPRESENT A BOUNDARY SURVEY OR PROPERTY OWNERSHIP

NE 1/4 OF NE 1/4 SEC 19, T26N., R05E., W.M.

Stantec
11130 NE 33rd Place,
Bellevue WA 98004
phone: (425) 869-9448

CITY OF KIRKLAND

CEDAR CREEK CULVERT REPLACEMENT

PERMANENT EASEMENT

MAPLE GLENN A CONDOMINIUM PARCEL # 508968-0000

SCALE	PLOTTING DATE	DRAWN	FILE PATH	CHECKED
NTS	10/22/2019	IMM/MJL	V:\2002\1817190451.\..esmt	MJL