CITY OF KIRKLAND

TOTEM LAKE CONNECTOR - ISSUE FOR BID

JOB NO. 01-20-PW

DECEMBER 06, 2019

CST CNM-0086-100

CITY OFFICIALS

PENNY SWEET	MAYOR
JAY ARNOLD	DEPUTY MAYOR
JON PASCAL	COUNCIL MEMBER
TOBY NIXON	COUNCIL MEMBER
DAVE ASHER	COUNCIL MEMBER
TOM NEIR	COUNCIL MEMBER
KELLI CURTIS	COUNCIL MEMBER
KURT TRIPLETT	CITY MANAGER
KATHY BROWN	PUBLIC WORKS DIRECTOR
ROD STEITZER, P.E.	CAPITAL PROJECTS MANAGER

CONTACT PERSONNEL

NAME	AGENCY	PHONE
AARON MCDONALD	COK PROJECTS MANAGER	425.587.3837
APARNA KHANAL	COK CAPITAL PROJECT SUPERVISOR	425.587.3827
TBD	PROJECT INSPECTOR	TBD
RIK MAYER	COK FIELD REPRESENTATIVE	206.496.4265
STEVE HOOPES	COK FIELD REPRESENTATIVE	425.623.5086
ERIN DEVOTO	DEPUTY PUBLIC WORKS DIRECTOR	425.587.3911
JOSH PANTZKE	COK UTILITIES DEPARTMENT	425.587.3917
DISPATCH	COK POLICE DEPARTMENT	425.587.3400
DISPATCH	COK FIRE DEPARTMENT	425.864.3650
DISPATCH	COK SPILL RESPONSE HOTLINE	425.587.3900
JEANNE COLEMAN	PUGET SOUND ENERGY	425.449.7410
SHARON SEITZ	PUGET SOUND ENERGY	206.643.1908
GEORGE MATOTE	NORTHSHORE UTILITY DISTRICT	425.398.4403
KEN McDOWELL	WOODINVILLE WATER DISTRICT	425.487.4104
MARK LAMPARD	KING COUNTY WASTEWATER TREATMENT DIVISION	206.477.5414
BRAD LANDIS	VERIZON BUSINESS	425.201.0901
JOE FORDON	COMCAST CABLE	425.263.5348
JASON ACQUARI	ZAYO	209.456.2856
JAY SCHWAB	FRONTIER COMMUNICATIONS	425.263.4035
RICHARD COX	SEATTLE PUBLIC UTILITIES	206.684.8117
JIMMY LIN	SEATTLE CITY LIGHT	206.733.9289
CONST.COORDINATOR	KING COUNTY METRO	206.684.2732
JEFF MILES	LAKE WASH. SCHOOL DISTRICT	425.936.1120
EMERGENCY		911
ONE CALL UTILITY LOCATE		800.424.5555

KIRKLAND

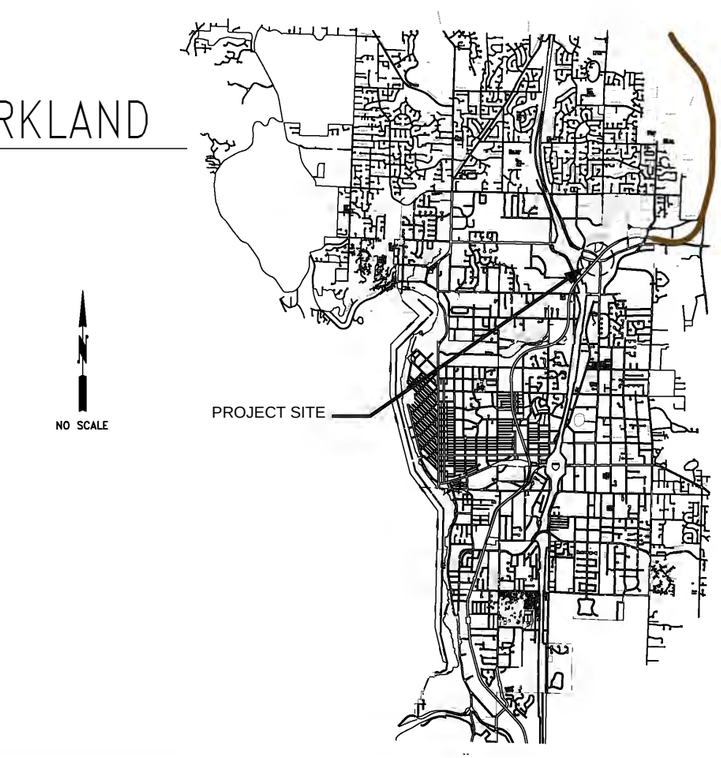

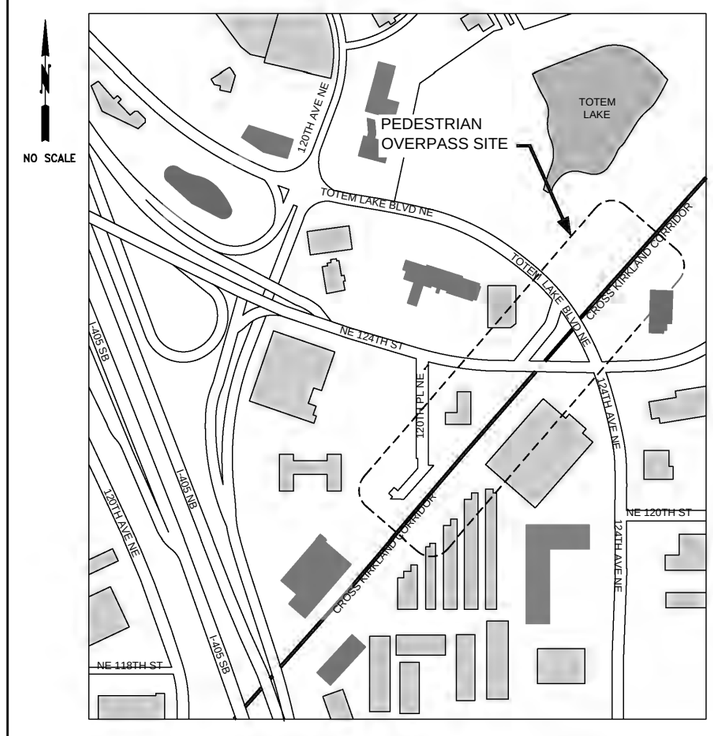

DRAWING SHEET INDEX

SHEET NO.	DWG NO.	REV. NO.	SHEET TITLE
1	–	0	COVER SHEET
2	TLC–G–100	0	DRAWING SHEET INDEX
3	TLC–S–101	0	GENERAL NOTES
4	TLC–S–102	0	SITE PLAN
5	TLC–S–103	0	ALIGNMENT & PROFILE GEOMETRY – SHEET 1
6	TLC–S–104	0	ALIGNMENT & PROFILE GEOMETRY – SHEET 2
7	TLC–S–105	0	GENERAL ARRANGEMENT – SHEET 1
8	TLC–S–106	0	GENERAL ARRANGEMENT – SHEET 2
9	TLC–S–107	0	GENERAL ARRANGEMENT – SHEET 3
10	TLC–S–108	0	SOUTH MSE WALL SECTIONS – SHEET 1
11	TLC–S–109	0	SOUTH MSE WALL SECTIONS – SHEET 2
12	TLC–S–110	0	SOUTH MSE WALL SECTIONS – SHEET 3
13	TLC–S–111	0	SOUTH MSE WALL SECTIONS – SHEET 4
14	TLC–S–112	0	NORTH MSE WALL SECTIONS – SHEET 1
15	TLC–S–113	0	NORTH MSE WALL SECTIONS – SHEET 2
16	TLC–S–114	0	MSE WALL ELEVATIONS
17	TLC–S–115	0	MSE WALL ELEVATIONS AND DETAILS
18	TLC–S–116	0	FOUNDATION LAYOUT
19	TLC–S–117	0	ABUTMENT FOUNDATIONS
20	TLC–S–118	0	CONCRETE Y–PIER FOUNDATIONS
21	TLC–S–119	0	STEEL Y–PIER FOUNDATIONS
22	TLC–S–120	0	SOUTH ABUTMENT OUTLINE
23	TLC–S–121	0	SOUTH ABUTMENT REINFORCEMENT
24	TLC–S–122	0	CONCRETE Y–PIER OUTLINE P2, P3, P5 & P6
25	TLC–S–123	0	CONCRETE Y–PIER OUTLINE P4
26	TLC–S–124	0	CONCRETE Y–PIER REINFORCEMENT
27	TLC–S–125	0	STEEL Y–PIERS
28	TLC–S–126	0	NORTH ABUTMENT OUTLINE – SHEET 1
29	TLC–S–127	0	NORTH ABUTMENT OUTLINE – SHEET 2
30	TLC–S–128	0	NORTH ABUTMENT REINFORCEMENT
31	TLC–S–129	0	NORTH ABUTMENT WINGWALL
32	TLC–S–130	0	SUPERSTRUCTURE – FRAMING PLAN SHEET 1
33	TLC–S–131	0	SUPERSTRUCTURE – FRAMING PLAN SHEET 2
34	TLC–S–132	0	SUPERSTRUCTURE – FRAMING PLAN SHEET 3
35	TLC–S–133	0	SUPERSTRUCTURE – FRAMING PLAN SHEET 4
36	TLC–S–134	0	SUPERSTRUCTURE – FRAMING PLAN SHEET 5
37	TLC–S–135	0	SUPERSTRUCTURE – FRAMING PLAN SHEET 6
38	TLC–S–136	0	SUPERSTRUCTURE – FRAMING PLAN SHEET 7
39	TLC–S–137	0	SUPERSTRUCTURE – HANGER, ARCH, AND TIE–CHORD SPLICE DETAILS
40	TLC–S–138	0	SUPERSTRUCTURE – END BEAM DETAILS – SHEET 1
41	TLC–S–139	0	SUPERSTRUCTURE – END BEAM DETAILS – SHEET 2
42	TLC–S–140	0	SUPERSTRUCTURE – END BEAM DETAILS – SHEET 3
43	TLC–S–141	0	SUPERSTRUCTURE – END BEAM DETAILS – OVERLOOK
44	TLC–S–142	0	SUPERSTRUCTURE – FLOOR–BEAM DETAILS
45	TLC–S–143	0	SUPERSTRUCTURE – PRECAST PANEL LAYOUT PLAN
46	TLC–S–144	0	SUPERSTRUCTURE – PRECAST PANEL REINFORCEMENT
47	TLC–S–145	0	SUPERSTRUCTURE – CIP OVERLAY & CURB LAYOUT PLAN
48	TLC–S–146	0	SUPERSTRUCTURE – CIP OVERLAY & CURB REINFORCEMENT
49	TLC–S–147	0	SUPERSTRUCTURE – APPROACH SLAB
50	TLC–S–148	0	DRAINS AND JOINT DETAILS
51	TLC–S–149	0	BEARING PLAN
52	TLC–S–150	0	BEARING DETAILS
53	TLC–S–151	0	MAINTENANCE WALKWAY
54	TLC–A–152	0	REST AREA
55	TLC–A–153	0	REST AREA PAVING PLAN – SHEET 1
56	TLC–A–154	0	REST AREA PAVING PLAN – SHEET 2
57	TLC–A–155	0	TYPICAL RAILING
58	TLC–A–156	0	RAILING TERMINATION
59	TLC–A–157	0	OVERLOOK
60	TLC–S–158	0	OVERLOOK – CIP OVERLAY
–	TLC–S–159 THRU TLC–S–164	–	NOT USED
61	TLC–S–165	0	SUGGESTED CONSTRUCTION STAGING
62	TLC–S–166	0	SUGGESTED CONSTRUCTION STAGING
–	TLC–S–167 THRU TLC–S–169	–	NOT USED
63	TLC–C–170	0	EROSION SEDIMENT CONTROL AND STORM DRAINAGE NOTES
64	TLC–C–171	0	DEMOLITION & EROSION CONTROL PLAN 1
65	TLC–C–171A	0	TEMPORARY ACCESS & TEMPORARY TRAIL PLAN 1
66	TLC–C–172	0	DEMOLITION & EROSION CONTROL PLAN 2
67	TLC–C–172A	0	TEMPORARY ACCESS & TEMPORARY TRAIL PLAN 2
68	TLC–C–173	0	DEMOLITION & EROSION CONTROL PLAN 3
69	TLC–C–173A	0	TEMPORARY ACCESS & TEMPORARY TRAIL PLAN 3
70	TLC–C–174	0	DEMOLITION & EROSION CONTROL PLAN 4
71	TLC–C–175	0	DEMOLITION & EROSION CONTROL PLAN 5
72	TLC–C–176	0	DEMOLITION & EROSION CONTROL PLAN 6
73	TLC–C–177	0	DEMOLITION & EROSION CONTROL PLAN 7
–	TLC–C–178 THRU TLC–C–180	–	NOT USED
74	TLC–C–181	0	TEMPORARY TRAFFIC CONTROL PLAN – DETOUR FOR PEDESTRIANS AND BIKES
75	TLC–C–182	0	TEMPORARY TRAFFIC CONTROL PLAN – LANE CLOSURE ON TOTEM LAKE BOULEVARD (NORTH SIDE)
76	TLC–C–183	0	TEMPORARY TRAFFIC CONTROL PLAN – LANE CLOSURE ON NE 124TH ST (SOUTH SIDE)
77	TLC–C–184	0	TEMPORARY TRAFFIC CONTROL PLAN – SLIP LANE CLOSURE FROM TOTEM LAKE BOULEVARD TO NE 124TH ST
78	TLC–C–185	0	TEMPORARY TRAFFIC CONTROL PLAN – DETOUR FOR SLIP LANE CLOSURE FROM TOTEM LAKE BOULEVARD TO NE 124TH ST
79	TLC–C–186	0	TEMPORARY TRAFFIC CONTROL PLAN – NIGHT TIME CLOSURE OF TOTEM LAKE BOULEVARD AND NE 124TH ST
80	TLC–C–187A	0	TEMPORARY TRAFFIC CONTROL PLAN – DETOUR FOR NIGHT TIME CLOSURE OF TOTEM LAKE BOULEVARD & NE 124TH ST (DETOUR FOR TOTEM LAKE BLVD)
81	TLC–C–187B	0	TEMPORARY TRAFFIC CONTROL PLAN – DETOUR FOR NIGHT TIME CLOSURE OF TOTEM LAKE BOULEVARD & NE 124TH ST (DETOUR FOR NE 124TH ST)
82	TLC–C–188	0	TEMPORARY TRAFFIC CONTROL PLAN – NIGHT TIME CLOSURE OF NE 124TH ST
83	TLC–C–189	0	TEMPORARY TRAFFIC CONTROL PLAN – DETOUR FOR NIGHT TIME CLOSURE OF NE 124TH ST
–	TLC–C–190	–	NOT USED
84	TLC–C–191	0	GRADING & DRAINAGE PLAN 1
85	TLC–C–192	0	GRADING & DRAINAGE PLAN 2
86	TLC–C–193	0	GRADING & DRAINAGE PLAN 3
87	TLC–C–194	0	GRADING & DRAINAGE PLAN 4
88	TLC–C–195	0	GRADING & DRAINAGE PLAN 5
89	TLC–C–196	0	GRADING & DRAINAGE PLAN 6
90	TLC–C–197	0	WEST DITCH TO EAST DITCH CULVERT CONNECTION
91	TLC–C–198	0	PROFILE – SIDEWALK CONNECTION AND RESTORED EAST DITCH
–	TLC–C–199	–	NOT USED
92	TLC–C–200	0	PLANT SCHEDULE
93	TLC–C–201	0	CORRIDOR RESTORATION 1
94	TLC–C–202	0	CORRIDOR RESTORATION 2
95	TLC–C–203	0	CORRIDOR RESTORATION 3
96	TLC–C–204	0	CORRIDOR RESTORATION 4
97	TLC–C–205	0	CORRIDOR RESTORATION 5
98	TLC–C–206	0	CORRIDOR RESTORATION 6
99	TLC–C–207	0	CORRIDOR RESTORATION 7
100	TLC–C–208	0	WALL PLANTING ELEVATIONS
–	TLC–C–209	–	NOT USED
101	TLC–C–210A	0	IRRIGATION NOTES 1
102	TLC–C–210B	0	IRRIGATION NOTES 2
103	TLC–C–220	0	CIVIL DETAILS 1
104	TLC–C–221	0	CIVIL DETAILS 2
105	TLC–C–222	0	CIVIL DETAILS 3
106	TLC–S–223	0	SIDEWALK GUARDRAIL DETAILS
–	–	–	–
107	TLC–E–300	0	LIGHTING SITE PLAN
108	TLC–E–301	0	ACCENT LIGHTING DETAILS 1
109	TLC–E–302	0	ACCENT LIGHTING DETAILS 2
110	TLC–E–303	0	ACCENT LIGHTING DETAILS 3
111	TLC–E–304	0	SINGLE LINE DIAGRAM
112	TLC–G–400	0	GEOTECHNICAL BOREHOLE KEY
113	TLC–G–401	0	GEOTECHNICAL BOREHOLE 1
114	TLC–G–402	0	GEOTECHNICAL BOREHOLE 2
115	TLC–G–403	0	GEOTECHNICAL BOREHOLE 3
116	TLC–G–404	0	GEOTECHNICAL BOREHOLE 4
117	TLC–G–405	0	GEOTECHNICAL BOREHOLE 5
118	TLC–G–406	0	GEOTECHNICAL BOREHOLE 6
119	TLC–G–407	0	GEOTECHNICAL BOREHOLE 7
120	TLC–G–408	0	GEOTECHNICAL BOREHOLE 8
121	TLC–G–409	0	GEOTECHNICAL BOREHOLE 9
122	TLC–G–410	0	GEOTECHNICAL BOREHOLE 10
123	TLC–G–411	0	GEOTECHNICAL BOREHOLE 11
124	TLC–G–412	0	GEOTECHNICAL BOREHOLE 12
125	TLC–G–413	0	GEOTECHNICAL BOREHOLE 13
126	TLC–G–414	0	GEOTECHNICAL BOREHOLE 14
127	TLC–G–415	0	GEOTECHNICAL BOREHOLE 15
128	TLC–G–416	0	GEOTECHNICAL BOREHOLE 16
129	TLC–G–417	0	GEOTECHNICAL BOREHOLE 17
130	TLC–G–418	0	GEOTECHNICAL BOREHOLE 18
131	TLC–G–419	0	GEOTECHNICAL BOREHOLE 19
132	TLC–G–420	0	GEOTECHNICAL BOREHOLE 20
133	TLC–G–421	0	GEOTECHNICAL TEST PITS

CITY OF KIRKLAND
DEPARTMENT OF PUBLIC WORKS
123 FIFTH AVENUE KIRKLAND, WA 98033
(425) 587-3800 www.kirklandwa.gov

NO.	DATE	BY	APPR.	REVISION
0	2019/12/06	CHJS	MWBM	ISSUE FOR BID

MATTHEW D. BAUGHMAN — STATE OF WASHINGTON — STRUCTURAL ENGINEER — PROFESSIONAL ENGINEER

COWI

APPROVED BY:

DATE:

SCVA 2019/12/06
DESIGNED BY. DATE

CHJS 2019/12/06
DRAWN BY. DATE

MWBM 2019/12/06
CHECKED BY. DATE

CITY OF KIRKLAND
TOTEM LAKE CONNECTION

DRAWING SHEET INDEX

SHEET: TLC–G–100

SCALE: AS SHOWN

FILENAME: A088367–G–100.dwg

File: D:\Projectwise\COWI\d0301252\A088367-G-100.dwg Save Date: Nov 26, 2019 1:22 PM Saved By: CHJS

GENERAL STRUCTURAL NOTES:

1. GENERAL

TLC–S–101 TABLE 1: SURVEY CONTROL POINTS				
POINT	NORTHING	EASTING	ELEVATION	DESCRIPTION
300	261916.56	1309473.63	128.32	SCRIBE
301	261708.44	1309751.98	142.99	SCRIBE
302	261761.67	1309973.45	140.11	REBAR
303	261484.84	1309720.92	145.62	SCRIBE
304	261553.14	1309266.87	142.12	SCRIBE
305	261231.96	1309389.91	152.85	SCRIBE
306	261426.22	1309397.69	145.36	SCRIBE
311	261364.65	1309746.23	152.43	NAIL

1.1 SPECIFIC STRUCTURAL DRAWING NOTES SUPERSEDE GENERAL STRUCTURAL NOTES WHERE THERE ARE DIFFERENCES.

1.2 DESIGN CODES

THIS STRUCTURE HAS BEEN DESIGNED IN ACCORDANCE WITH THE REQUIREMENTS OF THE:

- AASHTO LRFD GUIDE SPECIFICATIONS FOR THE DESIGN OF PEDESTRIAN BRIDGES, 2009
- AASHTO GUIDE SPECIFICATIONS FOR LRFD SEISMIC BRIDGE DESIGN, 2ND EDITION, 2011
- AASHTO LRFD BRIDGE DESIGN SPECIFICATIONS, 7TH EDITION, 2014 WITH 2015–2016 INTERIM REVISIONS
- WSDOT BRIDGE DESIGN MANUAL (BDM), 2016
- WSDOT STANDARD SPECIFICATIONS M41–10, 2018
- AASHTO/AWS D1.5M/D1.5, BRIDGE WELDING CODE, 7TH EDITION, 2015
- AWS D1.1/D1.1M, STRUCTURAL WELDING CODE–STEEL, 23RD EDITION, 2015 W/ ERATA

1.3 DESIGN LOADS

1.3.1 DEAD LOAD
- REINFORCED CONCRETE: 155 PSF
- STEEL: 490 PSF

1.3.2 LIVE LOAD (UNFACTORED)
- PEDESTRIAN: 90 PSF
- RAILING LOAD: PER AASHTO LRFD BRIDGE DESIGN SPECIFICATION 3.8
- CONSTRUCTION: 50 PSF
- VEHICLE: H10 + TRAILER (NO IMPACT)

1.3.3 SEISMIC DESIGN
- BRIDGE CLASSIFICATION: OTHER BRIDGE
- RETURN PERIOD: 975 YR
- SITE CLASS: D
- PGA: 0.39g
- S_{DS}: 1.01g
- S_{D1}: 0.53g
- S_{DC}: D

1.3.4 VEHICULAR COLLISION LOAD
- 420 KIPS AT 5'–0" ABOVE FINISHED GROUND

1.3.5 UNIFORM TEMPERATURE LOAD
- MAXIMUM DESIGN TEMPERATURE = 120°F
- MINIMUM DESIGN TEMPERATURE = 0°F

1.4 BRIDGE DESIGN LIFE: 75 YEARS

1.5 BELOW GROUND STEEL CORROSION LOSS RATES FOR NON–AGGRESSIVE FILL (PER BDM 7.10.2.C):
- RATE = 0.003 INCHES/YR
- TOTAL LOSS = 0.225 INCHES

1.6 ALL UNITS ARE IN FEET WITH A REFERENCE CONSTRUCTION TEMPERATURE OF 60°F UNLESS NOTED OTHERWISE.

1.7 DEFINITIONS:

BF = BACK FACE
CIP = CAST–IN–PLACE
CLR = CLEAR
C/W = COMPLETE WITH
DCP = DOUBLE CORROSION PROTECTION
EF = EACH FACE
EOP = EDGE OF PAVEMENT
EW = EACH WAY
FF = FRONT FACE
HORIZ = HORIZONTAL
HSS = HOLLOW STRUCTURAL SECTION
INT = INTERIOR
JNT = JOINT
KSF = KIPS PER SQUARE FOOT
KSI = KIPS PER SQUARE INCH
LF = LINEAR FOOT
MISC = MISCELANEOUS
NIC = NOT IN CONTRACT
OC = ON CENTER
OGFC = OPEN GRADED FRICTION COURSE
PL = PLATE
PSF = POUNDS PER SQUARE FOOT
PSI = POUNDS PER SQUARE INCH
REF = REFERENCE DIMENSION
ROW = RIGHT OF WAY
SE = SOUTHEAST
SS = STAINLESS STEEL
STIFF = STIFFENER
SYMM = SYMMETRIC ABOUT
THK = THICK
T.O. = TOP OF
TOC = TOP OF CONCRETE
TOD = TOP OF DECK
TYP = TYPICAL
UNO = UNLESS NOTED OTHERWISE
VERT = VERTICAL
W/ = WITH

PROVISIONAL = ITEM TO BE INSTALLED ONLY AS EXTENSION TO CONTRACT.

FUTURE = ITEM NOT REQUIRED UNDER THIS CONTRACT, BUT MAY BE INSTALLED AT A FUTURE DATE UNDER SEPARATE CONTRACT.

2. CONCRETE

2.1 CONCRETE COVER MEASURED FROM FACE OF CONCRETE TO ANY REINFORCING BAR SHALL BE AS FOLLOWS (INCHES), UNO:
- TOP OF DECK = 2.0
- SOFFIT OF DECK = 1.0
- SURFACES CAST AGAINST EARTH = 3.0
- DRILLED SHAFT = 6.0, UNO
- OTHER SURFACES NOT SPECIFIED ABOVE = 2.0

2.2 ALL EXPOSED EDGES OF CONCRETE TO BE CHAMFERED TO ¾", UNO.

2.3 CONCRETE CLASSES
- CAST–IN–PLACE CONCRETE FOR BRIDGE DECK SHALL BE CLASS 4000D
- STAY–IN–PLACE PRECAST CONCRETE DECK PANELS SHALL BE CLASS 4000D
- CAST–IN–PLACE CONCRETE FOR APPROACH SLABS SHALL BE CLASS 4000A
- CAST–IN–PLACE CONCRETE FOR DRILLED SHAFTS SHALL BE CLASS 5000P
- ALL OTHER CAST–IN–PLACE CONCRETE SHALL BE CLASS 4000
- CLASS 4000D AGGREGATE SHALL BE LIMITED TO 0.75–INCH PER SPECIAL PROVISIONS

2.4 EPOXY SHALL MEET THE REQUIREMENTS OF ASTM C881 AND APPROPRIATE CLASS FOR THE SITE TEMPERATURE:
- BONDING AGENT – TYPE II, GRADE 2
- REBAR AND ANCHOR BOLT – TYPE IV, GRADE 1, 2, OR 3
- LEVELING COURSE – TYPE I, GRADE 3

2.5 ROUGHENED CONCRETE SURFACES SHALL BE WET ABRASIVE BLAST CLEANED TO SOUND CONCRETE AND FREE OF LAITANCE IN ACCORDANCE WITH ASTM D4259 TO A MINIMUM PROFILE OF 0.25 INCHES.

2.6 WALKING SURFACE OF BRIDGE DECK AND APPROACH SLABS SHALL RECEIVE A TRANSVERSE BROOM FINISH.

3. REINFORCING STEEL

3.1 REINFORCING STEEL SHALL BE IN ACCORDANCE WITH ASTM A706 GRADE 60.

3.2 WELDING OF REINFORCING STEEL IS NOT PERMITTED, UNO.

3.3 SPLICING OF TRANSVERSE DECK REINFORCING BARS AT LOCATIONS OTHER THAN THOSE SPECIFIED ON THE DRAWINGS IS NOT PERMITTED.

3.4 LONGITUDINAL BAR SPLICES ON ADJACENT BARS IN THE DECK SHALL BE STAGGERED SUCH THAT NOT MORE THAN 50% OF THE BARS ARE SPLICED AT ANY LOCATION, AND NO SPLICES SHALL BE LOCATED OVER THE END BEAMS.

3.5 MECHANICAL COUPLERS SHALL ONLY BE USED WITH APPROVAL OF ENGINEER UNO.

4. STRUCTURAL STEEL

4.1 ROLLED STEEL SHAPES SHALL BE ASTM A992 GRADE 50.

4.2 PLATES AND BARS SHALL CONFORM TO ASTM A709 GRADE 50, UNO.

4.3 RECTANGULAR HOLLOW STRUCTURAL SECTIONS (HSS) SHALL CONFORM TO ASTM A500 GRADE B (46 KSI).

4.4 HANGERS SHALL USE ROUND HSS ASTM A500 GRADE C (46 KSI).

4.5 TIE–CHORD PIPE STEEL SHALL CONFORM TO API 5L X52 (52 KSI) OR BETTER.

4.6 ARCH PIPE STEEL SHALL CONFORM TO API 5L X52 (52 KSI) OR BETTER.

4.7 STAINLESS STEEL PIPES SHALL BE IN ACCORDANCE WITH ASTM A304.

4.8 ROUNDNESS OF PIPE FROM BENDING TO DESIGN GEOMETRY SHALL BE +/– 10% OF NOMINAL DIAMETER.

4.9 ALL STAINLESS STEEL, DESIGNATED AS SS, SHALL CONFORM TO ASTM A267, GRADE 304 OR 316.

4.10 ALL WELDING SHALL CONFORM TO AWS D1.5 AND D1.1. FIELD WELDS SHALL BE GROUND SMOOTH WHERE SHOWN ON THE PLANS AND PAINTED TO MATCH SURROUNDING STEEL. FULL ULTRASONIC TESTING OF FIELD WELDS IS REQUIRED.

4.11 SHEAR CONNECTORS SHALL CONFORM TO ASTM A108, WITH A MINIMUM TENSILE STRENGTH OF 60 KSI. SHEAR CONNECTORS SHALL BE 0.75–INCH DIA. X 4.75–INCHES LONG, UNO.

4.12 STRUCTURAL BOLTS SHALL BE HIGH STRENGTH STRUCTURAL BOLTS CONFORMING TO ASTM F3125 GRADE 325, TYPE 1, HOT DIPPED GALVANIZED. BOLTS SHALL BE 1–INCH DIA, WITH THREADS EXCLUDED FROM THE SHEAR PLANE, AND STD SIZE HOLES, UNO. FAYING SURFACES SHALL COME WITH A CLASS B SURFACE CONDITION.

4.13 ANCHOR BOLTS SHALL CONFORM TO ASTM F1554, GRADE 55 HOT DIPPED GALVANIZED, UNO.

4.14 BOLTS SHALL BE TIGHTENED BY TURN–OF–THE–NUT METHOD UNO.

4.15 FLAT COUNTERSUNK CAP SCREWS (SFHCS) SHALL CONFORM TO ASTM F835.

4.16 STRUTS OF CONCRETE Y–PIERS SHALL NOT DEVIATE FROM STRAIGHT BY MORE THAN 1/1000 OF THE LENGTH BETWEEN POINTS OF LATERAL SUPPORT.

4.17 STEEL Y–PIERS COLUMN PLUMBNESS SHALL BE WITHIN 1/500 OF VERTICAL.

4.18 ARCH STRAIGHTNESS WITHIN THEIR PLANE SHALL BE WITHIN 1/1500.

4.19 EACH MEMBER SHALL CARRY AN ERECTION MARK FOR IDENTIFICATION.

4.20 TIE–CHORD, ARCHES, HANGERS, AND END BEAMS SHALL BE FABRICATED ACCORDING TO FRACTURE CRITICAL MEMBER CRITERIA AND SHALL CONFORM TO THE LONGITUDINAL CHARPY V–NOTCH TESTING REQUIREMENTS OF THE STANDARD SPECIFICATIONS SECTION 6–03.2.

4.20 END BEAMS SHALL USE HIGH PERFORMANCE STEEL (HPS).

4.21 WELD ELECTRODE SHALL BE 70 KSI.

5. MISCELLANEOUS STEEL

5.1 MISCELLANEOUS STEEL SHALL CONFORM TO ASTM A572, GRADE 50 KSI.

5.2 MISCELLANEOUS STEEL IS STEEL NOT IDENTIFIED AS STRUCTURAL STEEL.

5.3 WELDING OF MISCELLANEOUS STEEL SHALL CONFORM TO AWS D1.1.

5.4 ALL MISCELLANEOUS STEEL AND EMBEDDED PLATE SHALL BE HOT DIPPED GALVANIZED TO ASTM A123.

6. COATINGS

6.1 ALL STRUCTURAL STEEL SHALL BE PAINTED UNLESS NOTED OTHERWISE. STEEL SURFACES SHALL BE BLAST CLEANED TO NEAR WHITE METAL BLAST, TO A 2 MIL PROFILE, AND PAINTED WITH A THREE COAT PAINT SYSTEM AS FOLLOWS:
- PRIME AND STRIP: INORGANIC ZINC RICH PRIMER 2.4 TO 2.8 MIL
- MIDCOAT: POLYAMIDE HIGH PERFORMANCE EPOXY 5.0 TO 6.0 MIL
- TOPCOAT: ALIPHATIC POLYURETHANE 1.5 TO 2.0 MIL

6.2 ALL TOP COAT PAINT (INCLUDING TOUCHUPS) SHALL COME FROM ONE SOURCE. THE COLOR SHALL BE PER SECTIONS 6–03.3(30) AND 6–07.2 OF THE SPECIAL PROVISIONS.

6.3 AREAS COVERED IN CONCRETE DO NOT NEED TO BE PAINTED. PAINT IS REQUIRED TO BE CARRIED INTO THE CONCRETE TO PROVIDE AN OVERLAP ZONE OF 2–INCHES MINIMUM.

6.4 AREAS REQUIRING FIELD WELDING SHALL BE MASKED OFF IN SHOP TO MAINTAIN BARE STEEL FINISH.

6.5 EXPOSED FACES OF ABUTMENTS A1 AND A12, PIERS P2–P6, AND PEDESTALS OF PIERS P7–P11 SHALL BE CLASS 2 WITH PIGMENTED SEALER. FINISH SHALL EXTEND 1' MIN BELOW FINISHED GROUND.

7. PRESTRESSING BARS

7.1 PT BARS SHALL BE DOUBLE CORROSION PROTECTED (DCP) HIGH STRENGTH 1.75" DIA. BARS CONFORMING TO AASHTO M275 GRADE 150 TYPE 2.

7.2 MANUFACTURER APPROVED HARDWARE SHALL BE USED FOR ANCHOR PLATES AND HEX NUTS.

8. BEARINGS

8.1 DISC BEARINGS SHALL CONFORM TO SPECIAL PROVISIONS.

9. CONSTRUCTION

9.1 A MONITORING SURVEY SHALL BE CONDUCTED DURING FOUNDATION WORK NEAR UTILITIES AND EXISTING STRUCTURES.

9.2 DRILLED SHAFT TIP ELEVATIONS ARE SUBJECT TO CHANGE AS APPROVED BY GEOTECHNICAL ENGINEER, DEPENDING UPON FOUNDATION MATERIAL ENCOUNTERED.

9.3 CONTRACTOR SHALL BE RESPONSIBLE FOR THE STABILITY OF THE STRUCTURE DURING CONSTRUCTION/ERECTION. ERECTION SEQUENCE DRAWINGS AND LIFTING PLANS SHALL BE SIGNED/SEALED BY WASHINGTON SE AND SUBMITTED TO ENGINEER FOR REVIEW PRIOR TO CARRYING OUT THE OPERATIONS.

9.4 FALSEWORK SHALL BE CAREFULLY RELEASED TO PREVENT IMPACT OR UNDUE STRESS IN THE STRUCTURE. CONCRETE PIER FORMWORK RELEASE SHALL FOLLOW THE SEQUENCE INDICATED ON THE PLANS.

9.5 AS–BUILT ELEVATIONS AND COORDINATES OF STEELWORK SHALL BE SUBMITTED TO ENGINEER FOR VERIFICATION PRIOR TO FULL SPAN LIFTS AND AFTER SPANS ARE ERECTED. ADJUSTMENTS TO STEELWORK MAY BE REQUIRED PRIOR TO CONCRETE PANEL PLACEMENT.

9.6 POINT LOADS ABOVE THE KC YORK FORCE MAIN SHALL BE AVOIDED DURING CONSTRUCTION ACTIVITIES OR PROTECTION OVER THE LINES SHALL BE PROVIDED. SEE NOTES ON SHEET TLC–S–165 FOR ADDITIONAL DETAILS.

CITY OF KIRKLAND
DEPARTMENT OF PUBLIC WORKS
123 FIFTH AVENUE KIRKLAND, WA 98033
(425) 587-3800 www.kirklandwa.gov

NO.	DATE	BY	APPR.	REVISION
0	2019/12/06	CHJS	MWBM	ISSUE FOR BID

MATTHEW D. BARGMAN — STATE OF WASHINGTON — STRUCTURAL ENGINEER — PROFESSIONAL ENGINEER

COWI

APPROVED BY:

DATE:

SCVA 2019/12/06 — DESIGNED BY: DATE
CHJS 2019/12/06 — DRAWN BY: DATE
MWBM 2019/12/06 — CHECKED BY: DATE

CITY OF KIRKLAND
TOTEM LAKE CONNECTION

GENERAL NOTES

SHEET: TLC–S–101
SCALE: AS SHOWN
FILENAME: A088367–S–101.dwg

File: D:\Projectwise\COWI\d0301252\A088367-S-101.dwg Save Date: Nov 26, 2019 1:20 PM Saved By: MKAL

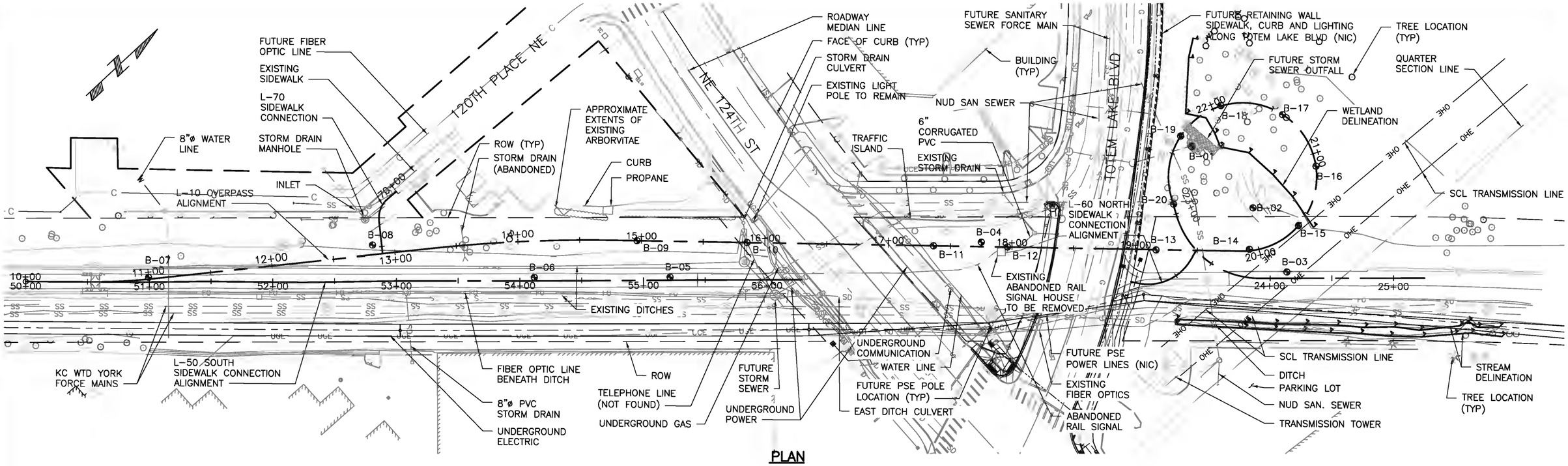

PLAN

SCALE: 1" = 40'

TLC-S-102: BOREHOLE COORDINATES				
HOLE	ELEVATION (NAVD88) (FT)	LOCATION (NAD83)		TOTAL DEPTH (FT)
		NORTHING	EASTING	
B-01	128.51	261723.77	1309792.61	71.5
B-02	129.92	261727.90	1309862.77	71.0
B-03	140.99	261714.16	1309919.44	61.5
B-04	144.48	261545.15	1309737.29	66.5
B-05	146.73	261338.47	1309590.63	31.5
B-06	147.61	261256.19	1309517.75	21.5
B-07	150.47	261022.93	1309310.13	21.5

TLC-S-102: BOREHOLE COORDINATES				
HOLE	ELEVATION (NAVD88) (FT)	LOCATION (NAD83)		TOTAL DEPTH (FT)
		NORTHING	EASTING	
B-08	159.51	261175.51	1309411.42	51.0
B-09	148.06	261337.75	1309551.07	61.5
B-10	144.94	261403.03	1309611.46	66.5
B-11	144.99	261514.27	1309713.74	71.5
B-12	143.37	261558.39	1309754.33	71.5
B-13	139.54	261646.62	1309835.71	81.0
B-14	135.80	261703.44	1309885.87	81.5

TLC-S-102: BOREHOLE COORDINATES				
HOLE	ELEVATION (NAVD88) (FT)	LOCATION (NAD83)		TOTAL DEPTH (FT)
		NORTHING	EASTING	
B-15	127.21	261745.80	1309898.00	81.0
B-16	125.22	261788.14	1309871.36	81.0
B-17	124.27	261796.19	1309821.39	80.5
B-18	124.80	261763.93	1309783.85	81.0
B-19	129.01	261722.72	1309780.43	71.3
B-20	137.16	261681.91	1309817.80	81.0

LEGEND:

PSE: PUGET SOUND ENERGY

SCL: SEATTLE CITY LIGHT

NUD: NORTHSHORE UTILITY DISTRICT

KC WTD: KING COUNTY WASTEWATER TREATMENT DIVISION

NOTES:

1. FOR GENERAL STRUCTURAL NOTES, SEE DWG TLC-S-101.
2. AZIMUTH IS MEASURED AS A POSITIVE ANGLE CLOCKWISE FROM NORTH.
3. ELEVATIONS AND DIMENSIONS IN THESE PLANS ARE CALCULATED FROM A 2017-2018 FIELD SURVEY BY 1ALLIANCE. THE CONTRACTORS SHALL VERIFY ALL THE DEPENDENT DIMENSIONS IN THE FIELD.
4. THIS INFORMATION HAS BEEN ASSEMBLED ON THE CITY OF KIRKLAND GEOGRAPHIC INFORMATION SYSTEM. DATA PROVIDED HEREIN IS DERIVED FROM A NUMBER OF SOURCES WITH VARYING LEVELS OF ACCURACY. THE CITY OF KIRKLAND DISCLAIMS ALL RESPONSIBILITY FOR THE ACCURACY OR COMPLETENESS OF INFORMATION CONTAINED HEREIN.
5. PROJECT LOCATION: KING COUNTY, SECTION 28, TOWNSHIP 26 NORTH, RANGE 5 EAST, KIRKLAND, WA.
6. VERTICAL DATUM: NAVD88; HORIZ DATUM: NAD83. COORDINATE SYSTEM = WASHINGTON STATE PLANE NORTH.
7. FUTURE WORKS SHOWN ALONG TOTEM LAKE BLVD ARE PART OF THE TOTEM LAKE GATEWAY PROJECT AND ARE EXPECTED TO BE COMPLETED PRIOR TO THE START OF CONSTRUCTION FOR THIS PROJECT.
8. FUTURE STORM SEWER AND OUTFALL ARE PART OF THE COMFORT INN POND STORMWATER BYPASS PROJECT AND MAY BE COMPLETED PRIOR TO THE START OF CONSTRUCTION FOR THIS PROJECT.
9. FUTURE OVERHEAD POWER LINES AND PSE POLES ALONG EAST SIDE OF CKC ROW MAY BE COMPLETED PRIOR TO THE START OF CONSTRUCTION FOR THIS PROJECT.

CITY OF KIRKLAND
DEPARTMENT OF PUBLIC WORKS
123 FIFTH AVENUE KIRKLAND, WA 98033
(425) 587-3800 www.kirklandwa.gov

NO.	DATE	BY	APPR.	REVISION
0	2019/12/06	CHJS	MWBM	ISSUE FOR BID

MATTHEW D. BAUGHMAN — STATE OF WASHINGTON — STRUCTURAL ENGINEER — PROFESSIONAL ENGINEER

COWI

APPROVED BY:

DATE:

SCVA 2019/12/06 DESIGNED BY DATE
CHJS 2019/12/06 DRAWN BY DATE
MWBM 2019/12/06 CHECKED BY DATE

CITY OF KIRKLAND
TOTEM LAKE CONNECTION

SITE PLAN

SHEET: TLC-S-102
SCALE: AS SHOWN
FILENAME: A088367-S-102.dwg

File: D:\Projectwise\COWI\ds301252\A088367-S-102.dwg Save Date: Nov 26, 2019 1:20 PM Saved By: CHJS

TLC–S–103 TABLE 1: L–10 CURVES GEOMETRY				
POINT	STATION	TYPE	NORTHING	EASTING
1	10+00.00	BP	260946.48	1309246.46
2	10+55.53	TC	260987.77	1309283.60
3	11+00.22	CT	261022.57	1309311.60
4	13+29.01	TC	261208.73	1309444.60
5	14+77.76	CT	261324.07	1309538.38
6	19+85.60	TC	261697.50	1309882.57
7	22+86.41	CT	261683.96	1309812.69
8	23+01.37	TC	261677.54	1309826.21
9	23+91.56	CT	261694.30	1309908.60
10	25+25.00	EP	261794.10	1309997.18

TLC–S–103 TABLE 2: L–10 SUPERELEVATION			
POINT	STATION	LH	RH
1	10+00	MATCH EXISTING	
2	10+50	+1.5%	–1.5%
3	14+84.77	+1.5%	–1.5%
4	14+86.77	+1.0%	–1.0%
5	14+94.77	–1.0%	–1.0%
6	19+16.44	–1.0%	–1.0%
7	19+36.44	0%	0%
8	19+86.44	–1.5%	+1.5%
9	24+75	–1.5%	+1.5%
10	25+25	MATCH EXISTING	

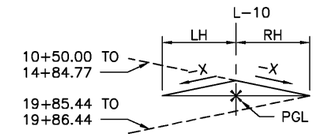

SUPERELEVATION

SCALE: NTS

LEGEND:

BP: BEGINNING POINT
EP: END POINT
CT: CURVE TO TANGENT
CC: CURVE TO CURVE
ROW: RIGHT–OF–WAY
PVI: POINT OF VERTICAL INTERSECTION
LVC: LENGTH OF VERTICAL CURVE
R: RADIUS OF CURVE
BVC: BEGIN VERTICAL CURVE
EVC: END VERTICAL CURVE

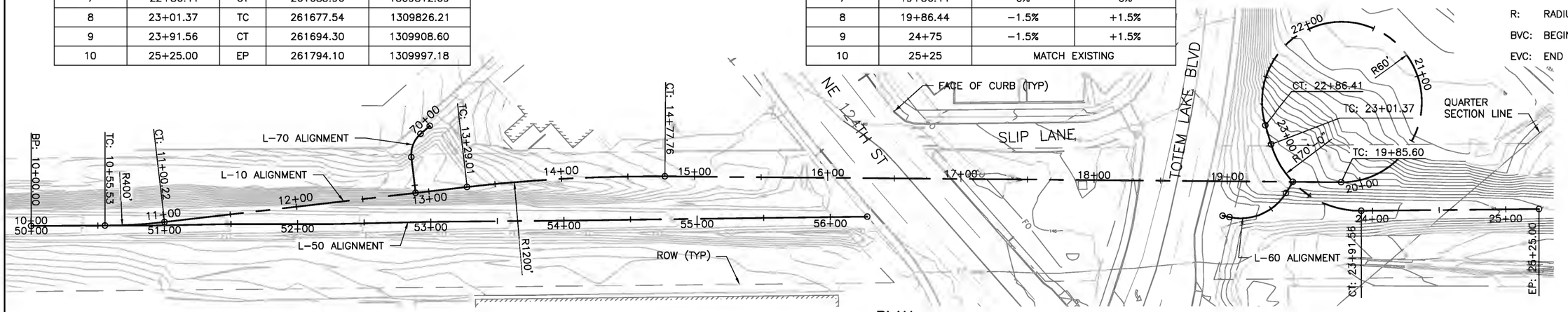

PLAN

SCALE: 1" = 40'

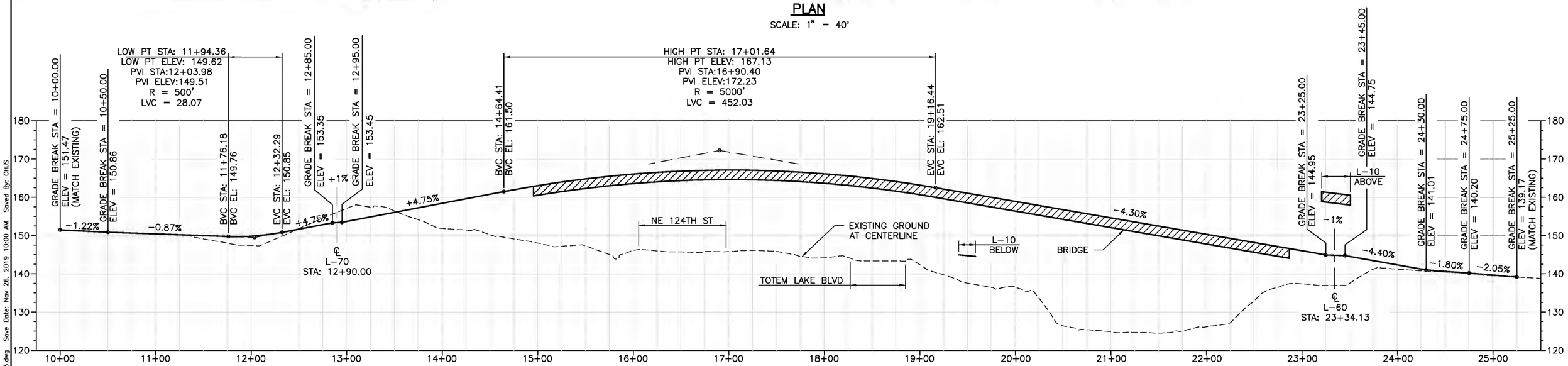

L–10 ALIGNMENT – ELEVATION

SCALE: H: 1" = 50', V: 1" = 12.5'

NOTES:

1. FOR GENERAL STRUCTURAL NOTES SEE DWG TLC–S–101.

File: D:\projectwise\cow\d0301252\A088367-S-103.dwg Save Date: Nov 26, 2019 10:00 AM Saved By: CHJS

CITY OF KIRKLAND
DEPARTMENT OF PUBLIC WORKS
123 FIFTH AVENUE KIRKLAND, WA 98033
(425) 587-3800 www.kirklandwa.gov

NO.	DATE	BY	APPR.	REVISION
0	2019/12/06	CHJS	MWBM	ISSUE FOR BID

MATTHEW D. BAUGHMAN — STATE OF WASHINGTON — STRUCTURAL ENGINEER — PROFESSIONAL ENGINEER

COWI

APPROVED BY:

DATE:

SCVA DESIGNED BY: 2019/12/06 DATE
CHJS DRAWN BY: 2019/12/06 DATE
MWBM CHECKED BY: 2019/12/06 DATE

CITY OF KIRKLAND
TOTEM LAKE CONNECTION

ALIGNMENT & PROFILE GEOMETRY – SHEET 1

SHEET: TLC–S–103
SCALE: AS SHOWN
FILENAME: A088367–S–103.dwg

TLC–S–104 TABLE 1: L–60 CURVES GEOMETRY				
POINT	STATION	TYPE	NORTHING	EASTING
1	60+12.04	BP	261614.67	1309841.44
2	60+17.25	TC	261617.71	1309845.67
3	60+66.38	CT	261661.29	1309860.70
4	60+76.27	EP	261670.79	1309857.95

TLC–S–104 TABLE 2: L–70 CURVES GEOMETRY				
POINT	STATION	TYPE	NORTHING	EASTING
1	70+00.00	BP	261218.63	1309391.85
2	70+09.13	TC	261209.50	1309391.59
3	70+28.69	CT	261192.68	1309399.96
4	70+55.73	EP	261176.96	1309421.96

NOTES:

1. FOR GENERAL STRUCTURAL NOTES SEE DWG TLC–S–101.

LEGEND:

BP: BEGINNING POINT
EP: END POINT
CT: CURVE TO TANGENT
CC: CURVE TO CURVE
ROW: RIGHT–OF–WAY
PVI:POINT OF VERTICAL INTERSECTION
LVC:LENGTH OF VERTICAL CURVE
R: RADIUS OF CURVE
BVC: BEGIN VERTICAL CURVE
EVC: END VERTICAL CURVE

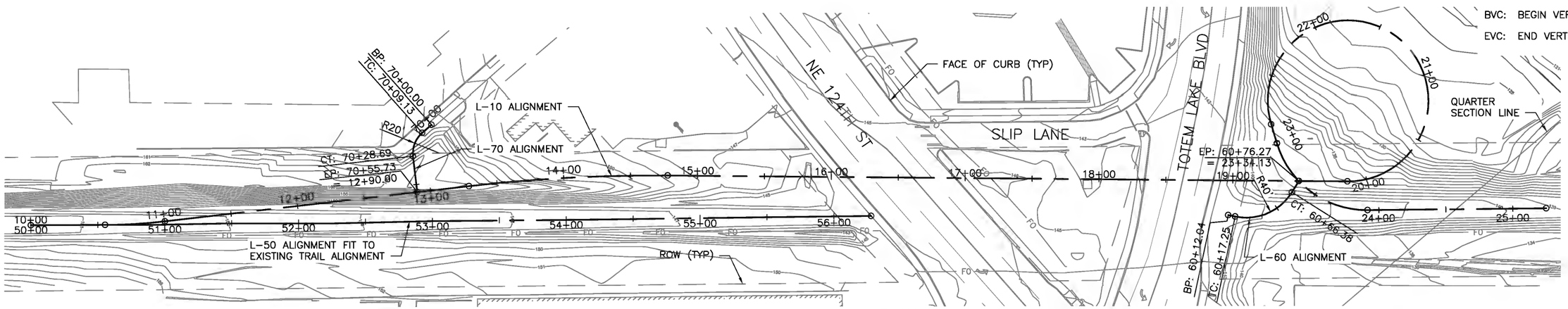

PLAN

SCALE: 1" = 40'

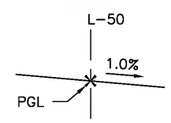

L–50 SUPERELEVATION

SCALE: NTS

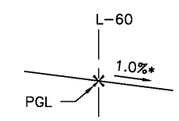

L–60 SUPERELEVATION

SCALE: NTS

* ADJUST SUPERELEVATION AT TIE–INS TO MATCH EXISTING SIDEWALKS AND PROPOSED L–10. RATE OF SUPERELEVATION CHANGE NOT TO EXCEED 1% PER 10 LF

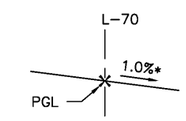

L–70 SUPERELEVATION

SCALE: NTS

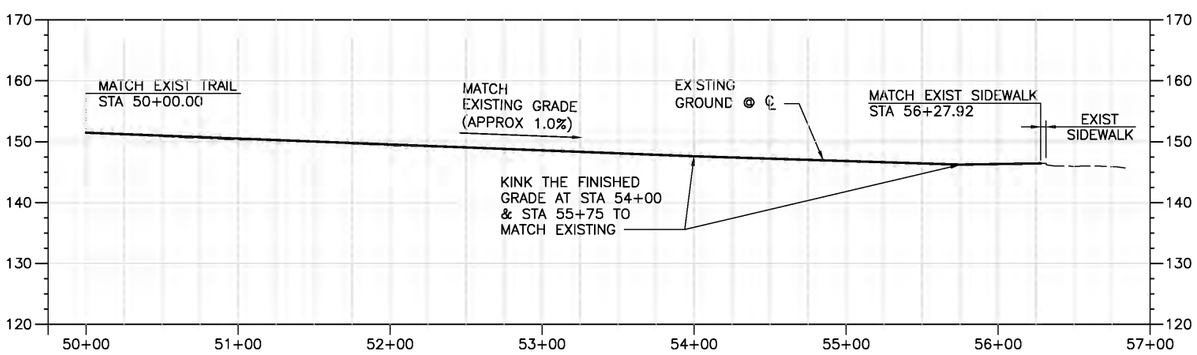

L–50 ALIGNMENT – ELEVATION

SCALE: H: 1" = 50', V: 1" = 12.5'
(FIELD FIT)

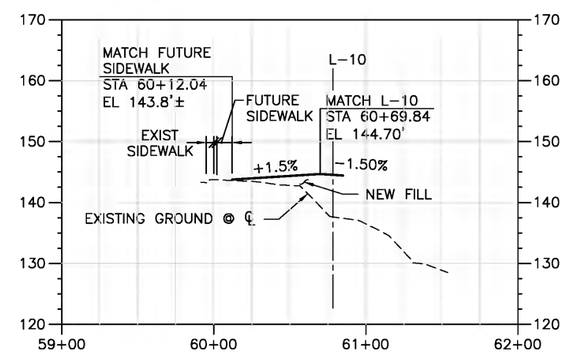

L–60 ALIGNMENT – ELEVATION

SCALE: H: 1" = 50', V: 1" = 12.5'
(FIELD FIT)

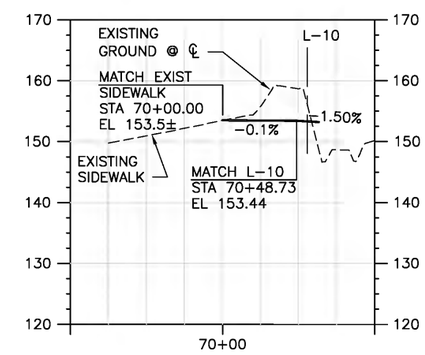

L–70 ALIGNMENT – ELEVATION

SCALE: H: 1" = 50', V: 1" = 12.5'
(FIELD FIT)

CITY OF KIRKLAND
DEPARTMENT OF PUBLIC WORKS
123 FIFTH AVENUE KIRKLAND, WA 98033
(425) 587-3800 www.kirklandwa.gov

NO.	DATE	BY	APPR.	REVISION
0	2019/12/06	CHJS	MWBM	ISSUE FOR BID

MATTHEW D. BAUGHMAN — STATE OF WASHINGTON — STRUCTURAL ENGINEER — PROFESSIONAL ENGINEER

COWI

APPROVED BY:

DATE:

SCVA 2019/12/06 — DESIGNED BY: DATE
CHJS 2019/12/06 — DRAWN BY: DATE
MWBM 2019/12/06 — CHECKED BY: DATE

CITY OF KIRKLAND
TOTEM LAKE CONNECTION

ALIGNMENT & PROFILE GEOMETRY – SHEET 2

SHEET: TLC–S–104
SCALE: AS SHOWN
FILENAME: A088367–S–104.dwg

File: D:\projectwise\cowi\d0301252\A088367–S–104.dwg Save Date: Nov 26, 2019 3:22 PM Saved By: CHJS

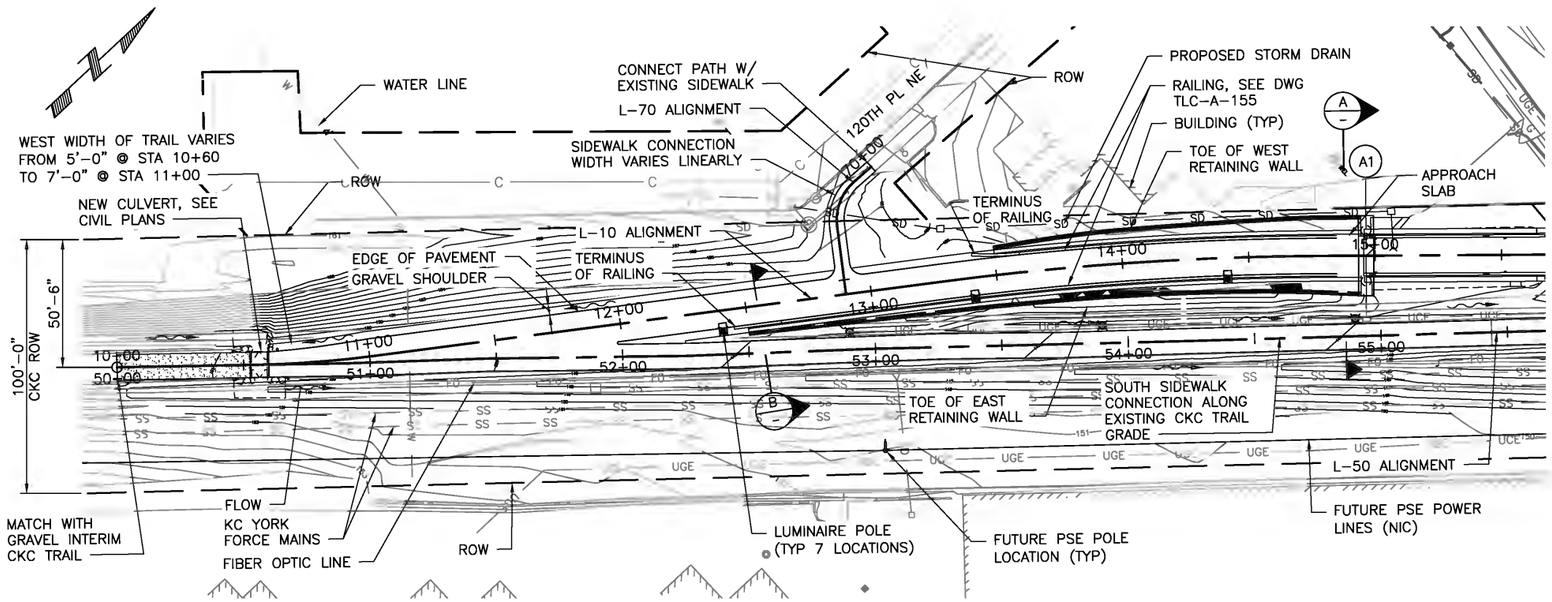

PLAN

SCALE: 1" = 30'

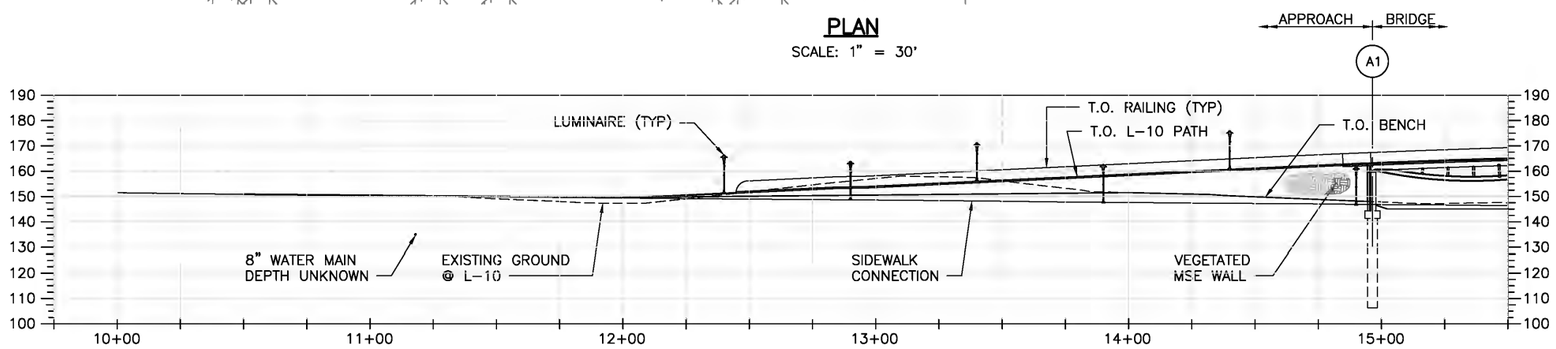

EAST WALL ELEVATION

SCALE: 1" = 30'

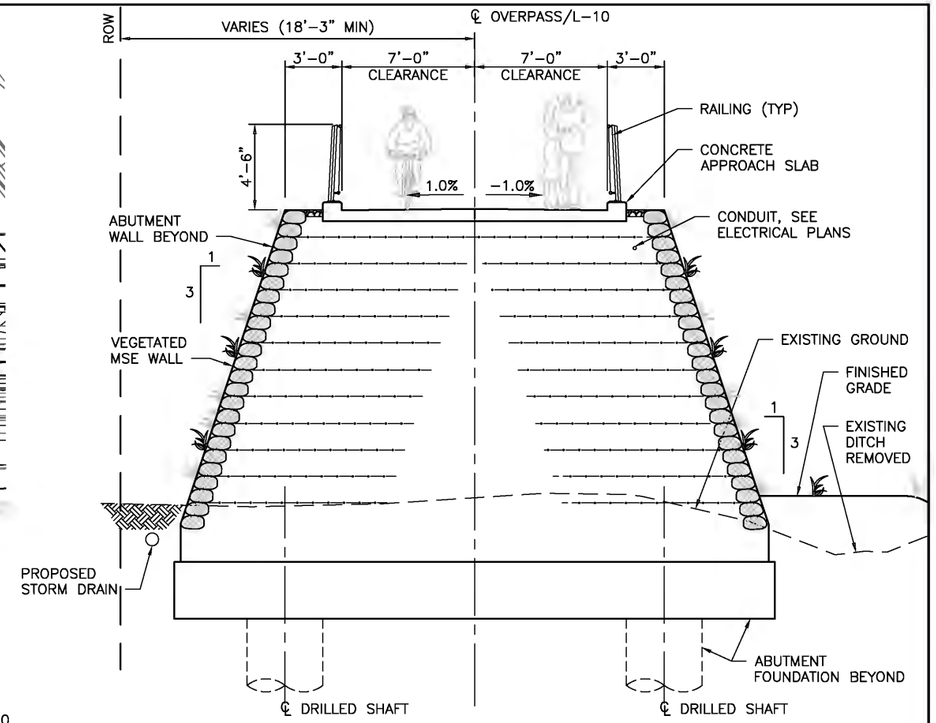

SECTION A

SCALE: ¼" = 1'-0"

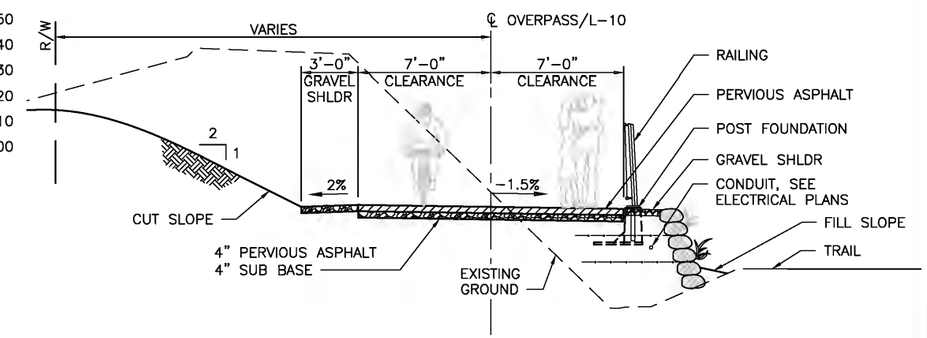

SECTION B

SCALE: ¼" = 1'-0"

TLC-S-105 TABLE 1: PAVEMENT/GRAVEL INTERFACE LOCATIONS *
STATION
10+52.67 / 50+52.67 **
24+75
70+40

* SEE PAVED SURFACE TRANSITION DETAIL ON DWG TLC-S-115.

** SEE DWG TLC-C-197.

TLC-S-105 TABLE 2: LUMINAIRE LOCATIONS	
STATION	OFFSET
12+40 *	8'-3" RT
13+40.75 *	8'-3" RT
14+41.5 *	8'-3" RT
52+90	7'-0" LT
53+90	7'-0" LT
54+90	7'-0" LT
55+90	7'-0" LT

* ADJUST AS REQUIRED TO AVOID CONFLICT WITH RAILING FOOTING.

NOTES:

1. FOR GENERAL STRUCTURAL NOTES, SEE DRAWING TLC-S-101.
2. GRAVEL SHOULDERS SHALL BE 4" THICK CRUSHED SURFACE TOP COURSE.

CITY OF KIRKLAND
DEPARTMENT OF PUBLIC WORKS
123 FIFTH AVENUE KIRKLAND, WA 98033
(425) 587-3800 www.kirklandwa.gov

NO.	DATE	BY	APPR.	REVISION
0	2019/12/06	CHJS	MWBM	ISSUE FOR BID

MATTHEW D. BAUGHMAN — STATE OF WASHINGTON — STRUCTURAL ENGINEER — PROFESSIONAL ENGINEER

COWI

APPROVED BY:

DATE:

SCVA DESIGNED BY — 2019/12/06 DATE
CHJS DRAWN BY — 2019/12/06 DATE
MWBM CHECKED BY — 2019/12/06 DATE

CITY OF KIRKLAND
TOTEM LAKE CONNECTION

GENERAL ARRANGEMENT – SHEET 1

SHEET: TLC-S-105
SCALE: AS SHOWN
FILENAME: A088367-S-105.dwg

File: D:\Projectwise\COWI\d0301252\A088367-S-105.dwg Save Date: Nov 26, 2019 1:21 PM Saved By: CHJS

NOTES:

1. FOR GENERAL STRUCTURAL NOTES, SEE DWG TLC-S-101.
2. VERTICAL CLEARANCE OVER SIDEWALKS IS 10'-0" MIN.

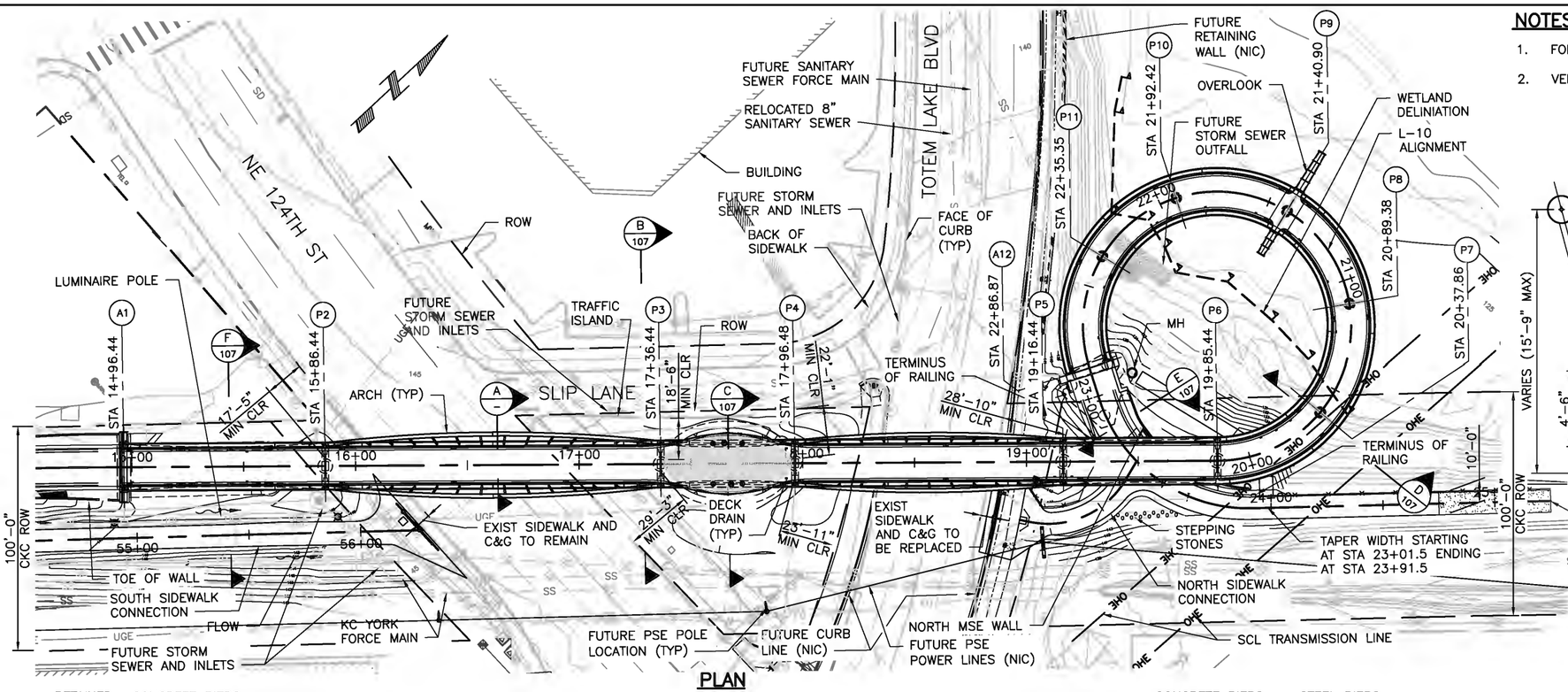

PLAN

SCALE: 1" = 30'

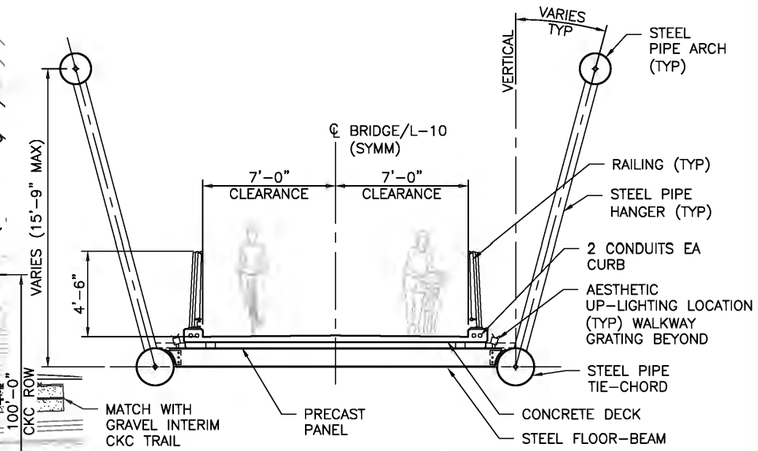

SECTION A

SCALE: ¼" = 1'-0"
(SPANS 2 & 4)

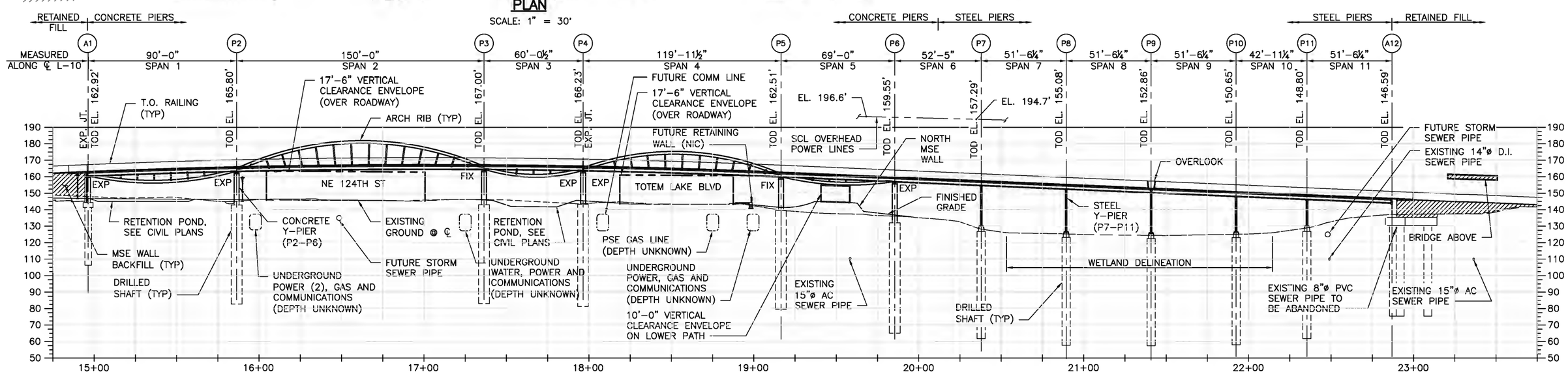

DEVELOPED ELEVATION

SCALE: 1" = 30'

CITY OF KIRKLAND
DEPARTMENT OF PUBLIC WORKS
123 FIFTH AVENUE KIRKLAND, WA 98033
(425) 587-3800 www.kirklandwa.gov

NO.	DATE	BY	APPR.	REVISION
0	2019/12/06	CHJS	MWBM	ISSUE FOR BID

MATTHEW D. BACHMAN — STATE OF WASHINGTON — STRUCTURAL ENGINEER — PROFESSIONAL ENGINEER

COWI

APPROVED BY:

DATE:

SCVA DESIGNED BY: 2019/12/06 DATE
CHJS DRAWN BY: 2019/12/06 DATE
MWBM CHECKED BY: 2019/12/06 DATE

CITY OF KIRKLAND
TOTEM LAKE CONNECTION

GENERAL ARRANGEMENT – SHEET 2

SHEET: TLC-S-106
SCALE: AS SHOWN
FILENAME: A088367-S-106.dwg

File: D:\Projectwise\COWI\d0301252\A088367-S-106.dwg Save Date: Nov 26, 2019 1:21 PM Saved By: CHJS

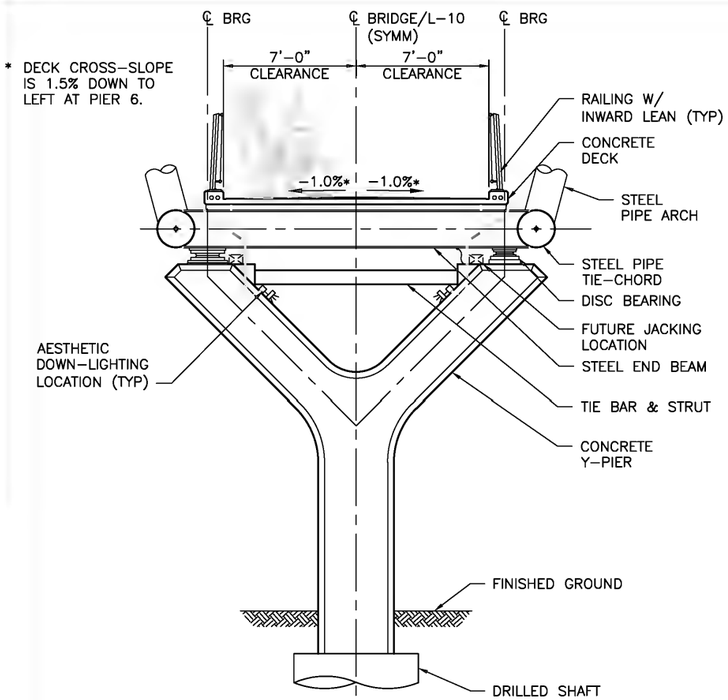

SECTION B 106
SCALE: ¼" = 1'-0"
(PIER 3 SHOWN, PIERS 2, 4, 5 & 6 SIMILAR)

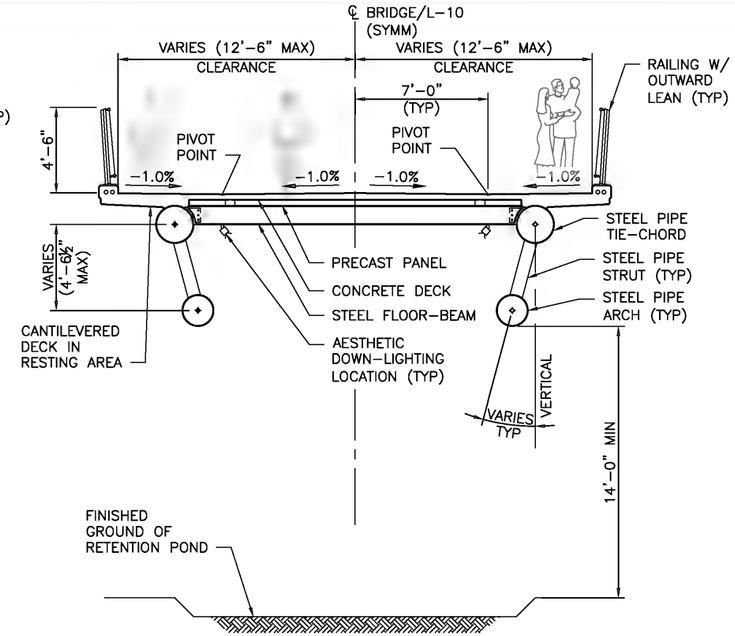

SECTION C 106
SCALE: ¼" = 1'-0"
(SPAN 3)

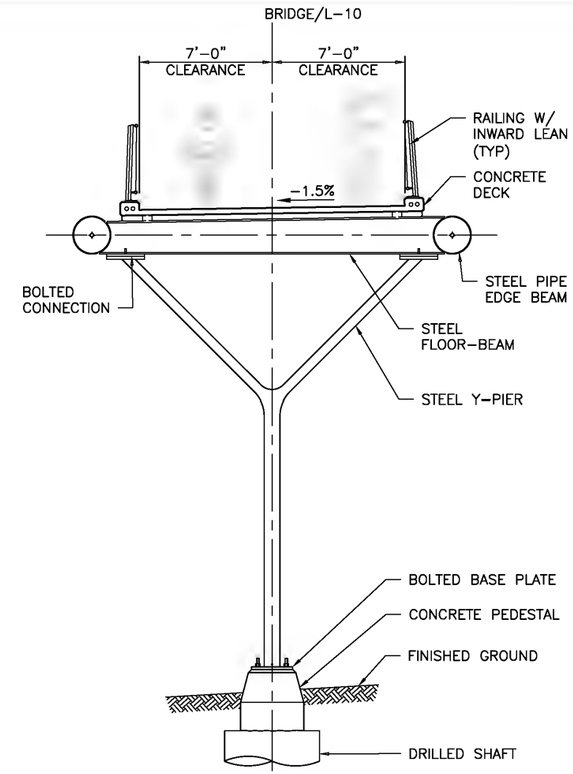

SECTION D 106
SCALE: ¼" = 1'-0"
(SPANS 7-11)

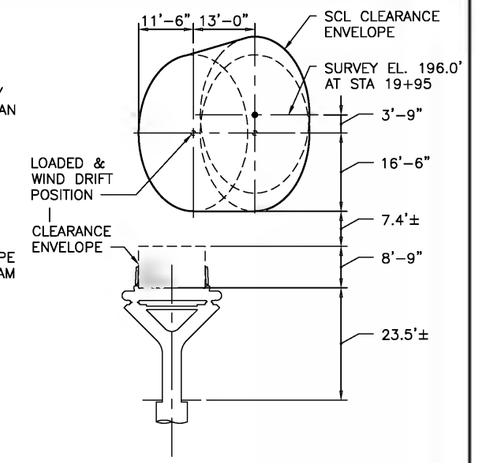

SCL OVERHEAD POWER CLEARANCE AT PIER 6
SCALE: NTS

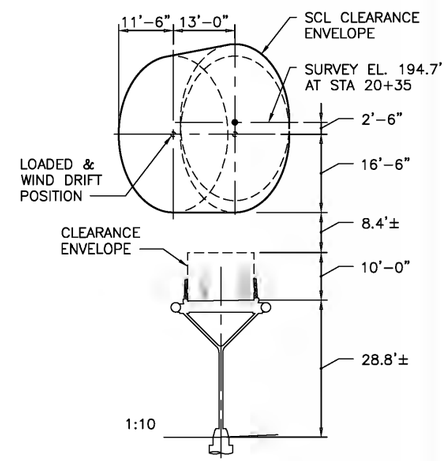

SCL OVERHEAD POWER CLEARANCE NEAR PIER 7
SCALE: NTS

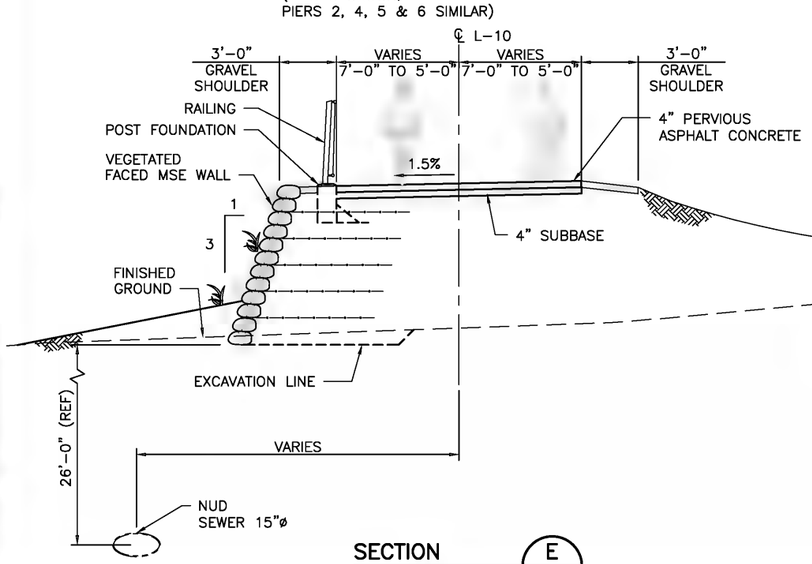

SECTION E 106
SCALE: ¼" = 1'-0"
(NORTH MSE WALL)

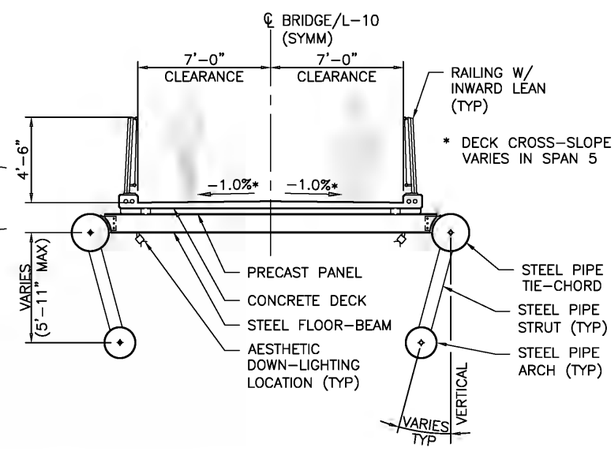

SECTION F 106
SCALE: ¼" = 1'-0"
(SPAN 1 SHOWN, SPAN 5 SIMILAR)

NOTES:

1. FOR GENERAL STRUCTURAL NOTES SEE DWG TLC-S-101.

CITY OF KIRKLAND
DEPARTMENT OF PUBLIC WORKS
123 FIFTH AVENUE KIRKLAND, WA 98033
(425) 587-3800 www.kirklandwa.gov

NO.	DATE	BY	APPR.	REVISION
0	2019/12/06	CHJS	MWBM	ISSUE FOR BID

MATTHEW D. BAUGHMAN, STATE OF WASHINGTON, STRUCTURAL ENGINEER, PROFESSIONAL ENGINEER

COWI

APPROVED BY:

DATE:

SCVA DESIGNED BY.	2019/12/06 DATE
CHJS DRAWN BY.	2019/12/06 DATE
MWBM CHECKED BY.	2019/12/06 DATE

CITY OF KIRKLAND
TOTEM LAKE CONNECTION

GENERAL ARRANGEMENT – SHEET 3

SHEET: TLC-S-107
SCALE: AS SHOWN
FILENAME: A088367-S-107.dwg

File: C:\Projectwise\OUII\W0301252\A088367-S-107.dwg Save Date: Nov 20, 2019 1:21 PM Saved By: CHJS

LEGEND:

1. EXISTING GROUND
2. PERVIOUS ASPHALT W/ SUB BASE
3. MAINTAIN EXISTING GRAVEL SIDEWALK CONNECTION
4. DITCH
5. GRADING NEAR WEST SIDEWALK CONNECTION
6. FILL SLOPE 2H:1V
7. BENCH
8. VEGETATED WALL 1H:3V
9. RAILING W/ FOOTING
10. CUT SLOPE 2H:1V BLENDED INTO EXISTING GRADE
11. NOT USED
12. EXISTING CURB
13. GRAVEL SHOULDER
14. NOT USED
15. MSE GEOGRID REINFORCEMENT
16. EXCAVATION LINE
17. LIGHT POWER CABLE
18. STORM SEWER PIPE
19. ACCESS TRAIL

NOTES:

1. FOR GENERAL STRUCTURAL NOTES SEE DWG TLC–S–101.
2. FUTURE SANITARY SEWER FORCE MAIN NOT SHOWN.

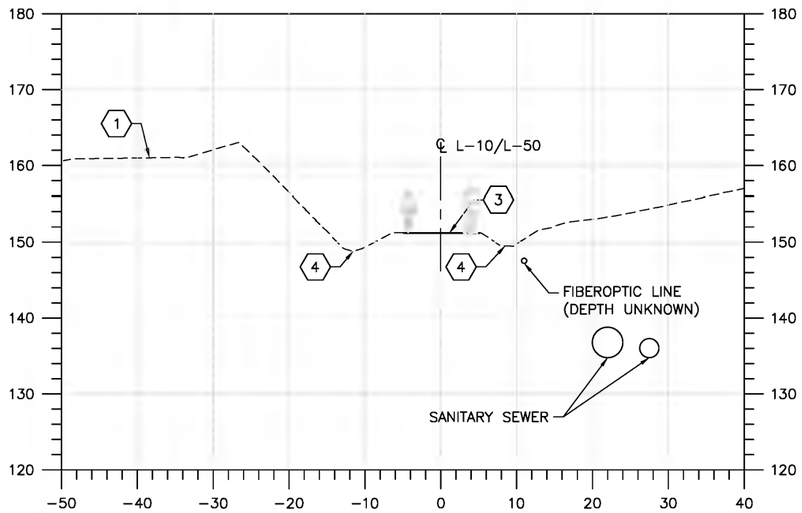

STA 10+20

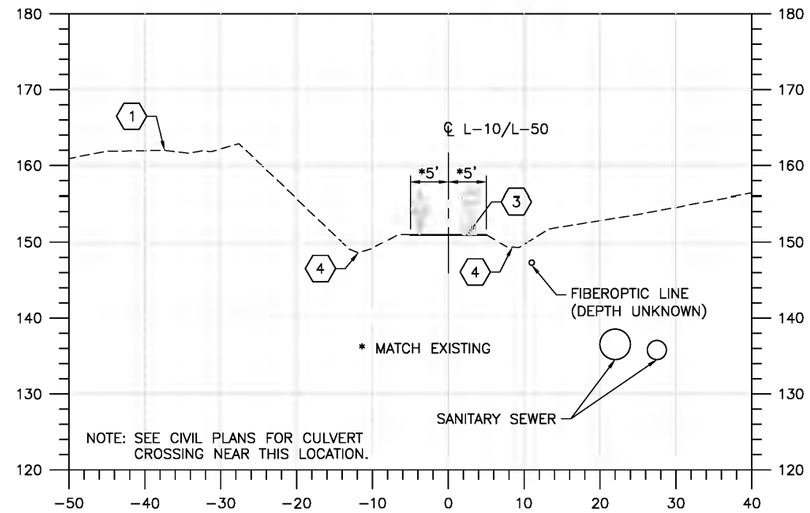

STA 10+40

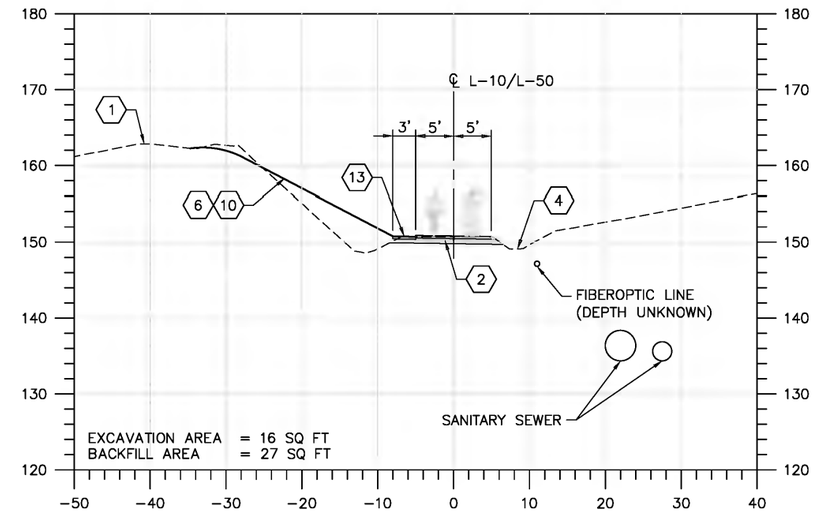

STA 10+60

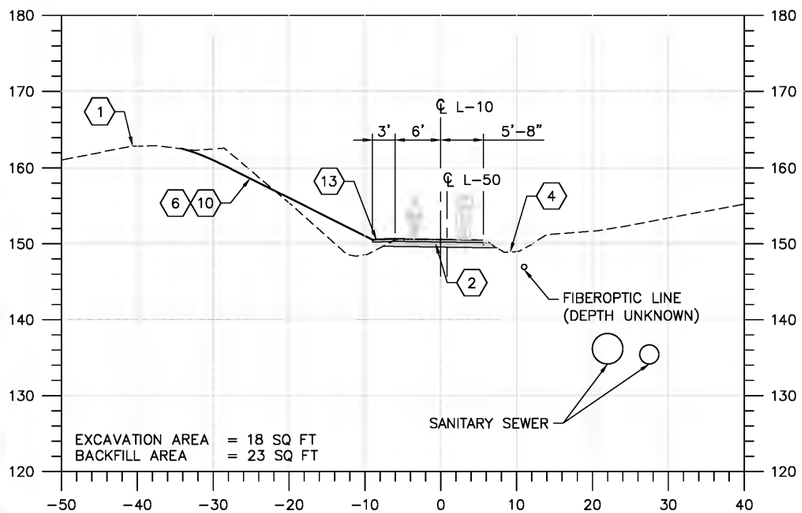

STA 10+80

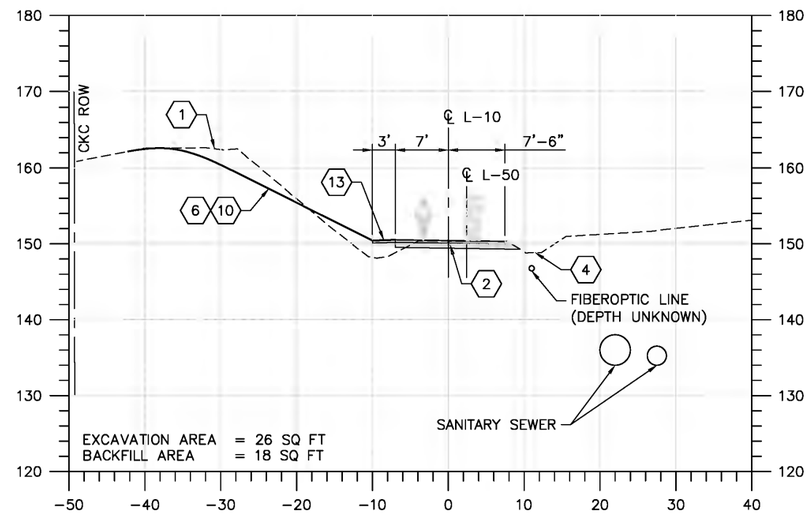

STA 11+00

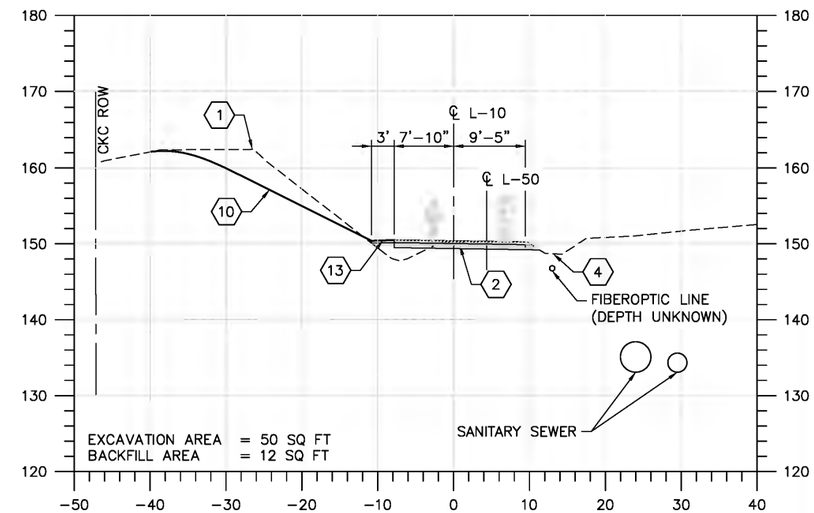

STA 11+20

SOUTH WALL SECTIONS

SCALE: 1" = 10'

CITY OF KIRKLAND
DEPARTMENT OF PUBLIC WORKS
123 FIFTH AVENUE KIRKLAND, WA 98033
(425) 587-3800 www.kirklandwa.gov

NO.	DATE	BY	APPR.	REVISION
0	2019/12/06	CHJS	MWBM	ISSUE FOR BID

MATTHEW D. BACHMAN — STATE OF WASHINGTON — STRUCTURAL ENGINEER — PROFESSIONAL ENGINEER

COWI

APPROVED BY:

DATE:

SCVA DESIGNED BY — 2019/12/06 DATE
CHJS DRAWN BY — 2019/12/06 DATE
MWBM CHECKED BY — 2019/12/06 DATE

CITY OF KIRKLAND
TOTEM LAKE CONNECTION

SOUTH MSE WALL SECTIONS – SHEET 1

SHEET: TLC–S–108
SCALE: AS SHOWN
FILENAME: A088367–S–108–113.dwg

File: D:\Projectwise\COWI\a0301252\A088367-S-108-113.dwg Save Date: Nov 26, 2019 1:22 PM Saved By: CHJS

LEGEND:

1. EXISTING GROUND
2. PERVIOUS ASPHALT W/ SUB BASE
3. MAINTAIN EXISTING GRAVEL SIDEWALK CONNECTION
4. DITCH
5. GRADING NEAR WEST SIDEWALK CONNECTION
6. FILL SLOPE 2H:1V
7. BENCH
8. VEGETATED WALL 1H:3V
9. RAILING W/ FOOTING
10. CUT SLOPE 2H:1V BLENDED INTO EXISTING GRADE
11. NOT USED
12. EXISTING CURB
13. GRAVEL SHOULDER
14. NOT USED
15. MSE GEOGRID REINFORCEMENT
16. EXCAVATION LINE
17. LIGHT POWER CABLE
18. STORM SEWER PIPE
19. ACCESS TRAIL

NOTES:

1. FOR GENERAL STRUCTURAL NOTES SEE DWG TLC–S–101.
2. FUTURE SANITARY SEWER FORCE MAIN NOT SHOWN.

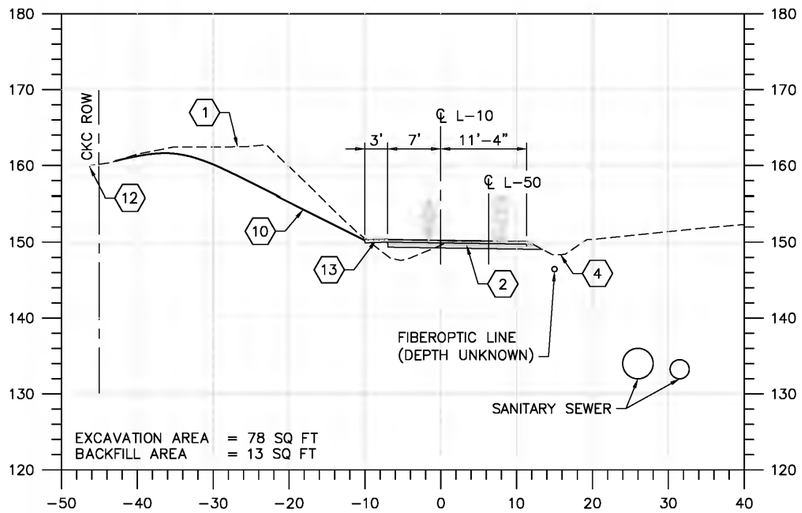

STA 11+40

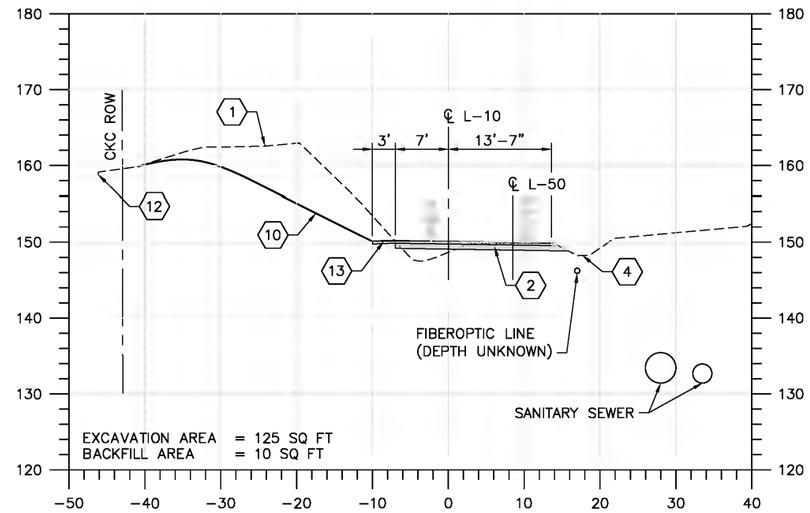

STA 11+60

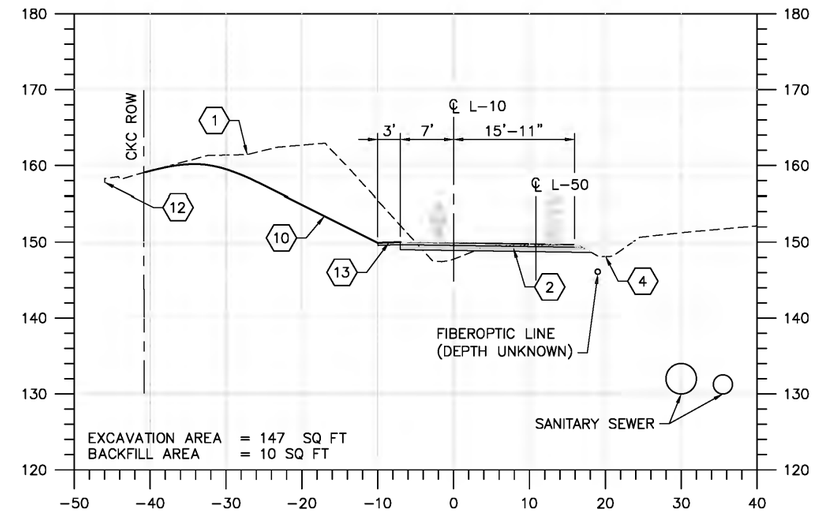

STA 11+80

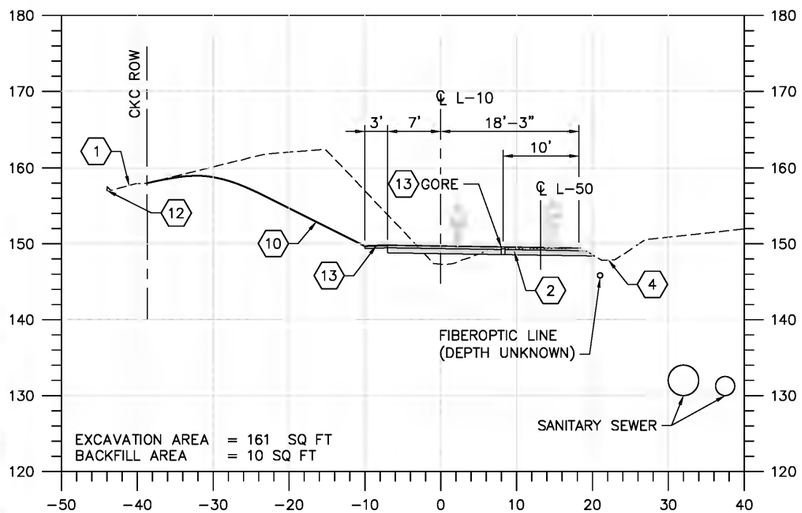

STA 12+00

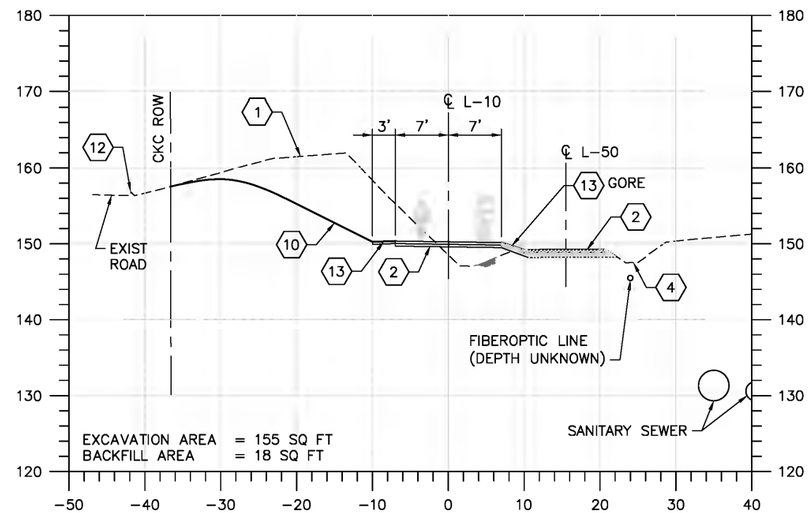

STA 12+20

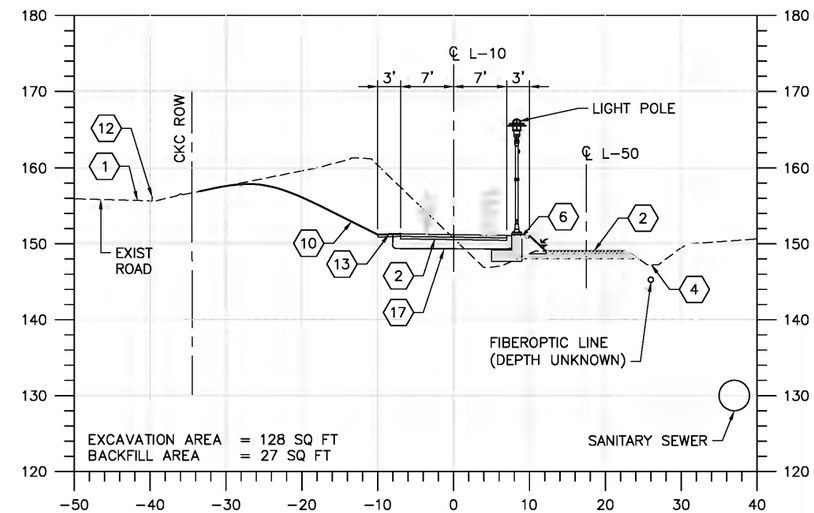

STA 12+40

SOUTH WALL SECTIONS

SCALE: 1" = 10'

CITY OF KIRKLAND
DEPARTMENT OF PUBLIC WORKS
123 FIFTH AVENUE KIRKLAND, WA 98033
(425) 587-3800 www.kirklandwa.gov

NO.	DATE	BY	APPR.	REVISION
0	2019/12/06	CHJS	MWBM	ISSUE FOR BID

MATTHEW D. BACHMAN — STATE OF WASHINGTON — STRUCTURAL ENGINEER — PROFESSIONAL ENGINEER

COWI

APPROVED BY:

DATE:

SCVA DESIGNED BY: 2019/12/06 DATE
CHJS DRAWN BY: 2019/12/06 DATE
MWBM CHECKED BY: 2019/12/06 DATE

CITY OF KIRKLAND
TOTEM LAKE CONNECTION

SOUTH MSE WALL SECTIONS – SHEET 2

SHEET: TLC–S–109
SCALE: AS SHOWN
FILENAME: A088367–S–108–113.dwg

File: D:\Projectwise\COWI\a0301252\A088367-S-108-113.dwg Save Date: Nov 26, 2019 1:22 PM Saved By: CHJS

LEGEND:

1. EXISTING GROUND
2. PERVIOUS ASPHALT W/ SUB BASE
3. MAINTAIN EXISTING GRAVEL SIDEWALK CONNECTION
4. DITCH
5. GRADING NEAR WEST SIDEWALK CONNECTION
6. FILL SLOPE 2H:1V
7. BENCH
8. VEGETATED WALL 1H:3V
9. RAILING W/ FOOTING
10. CUT SLOPE 2H:1V BLENDED INTO EXISTING GRADE
11. NOT USED
12. EXISTING CURB
13. GRAVEL SHOULDER
14. NOT USED
15. MSE GEOGRID REINFORCEMENT
16. EXCAVATION LINE
17. LIGHT POWER CABLE
18. STORM SEWER PIPE
19. ACCESS TRAIL

NOTES:

1. FOR GENERAL STRUCTURAL NOTES SEE DWG TLC–S–101.
2. FUTURE SANITARY SEWER FORCE MAIN NOT SHOWN.

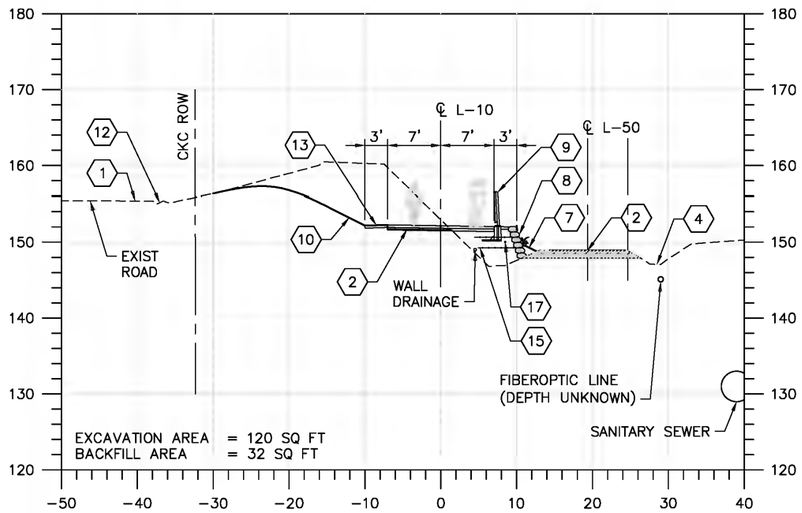

STA 12+60

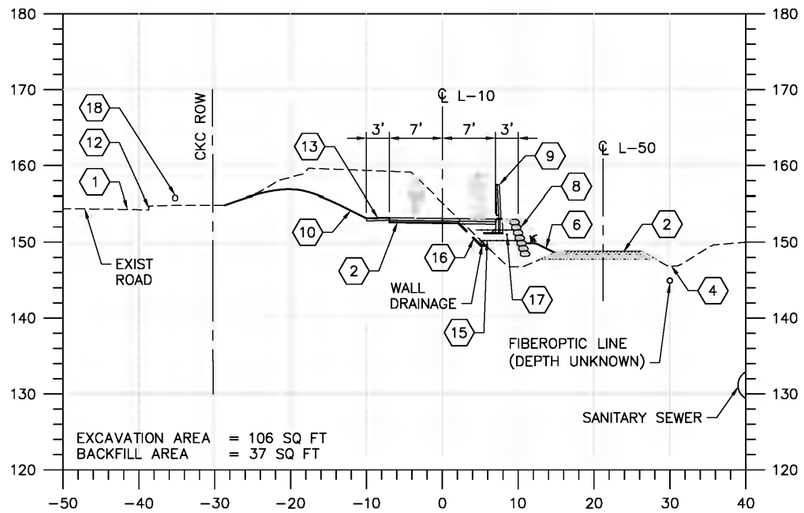

STA 12+80

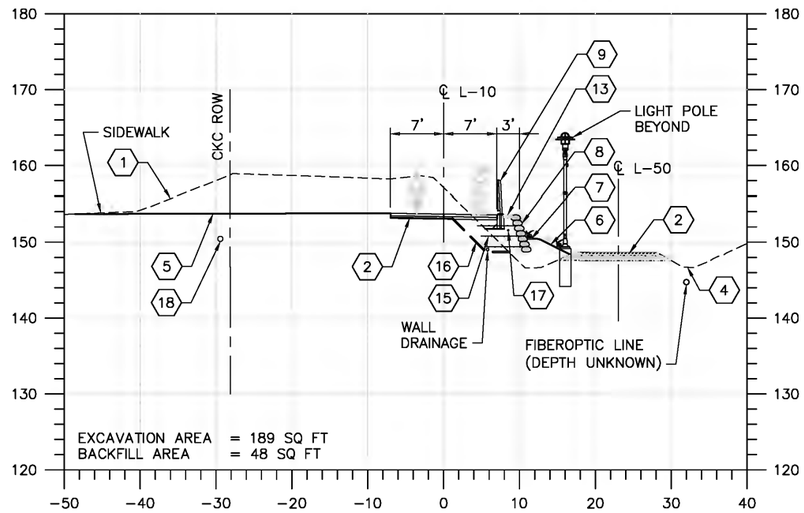

STA 13+00

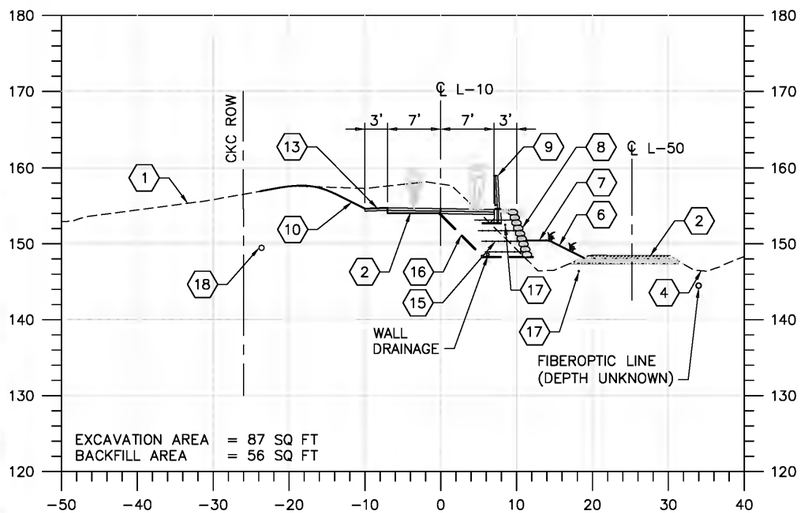

STA 13+20

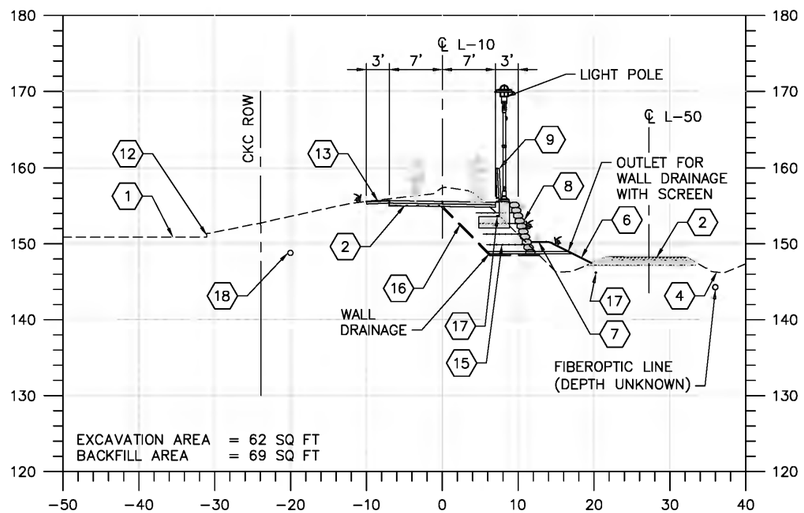

STA 13+40

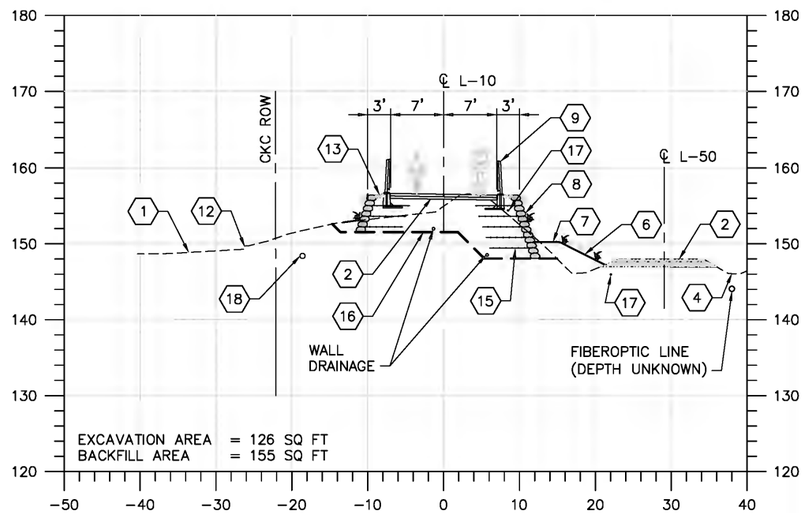

STA 13+60

SOUTH WALL SECTIONS

SCALE: 1" = 10'

CITY OF KIRKLAND
DEPARTMENT OF PUBLIC WORKS
123 FIFTH AVENUE KIRKLAND, WA 98033
(425) 587-3800 www.kirklandwa.gov

NO.	DATE	BY	APPR.	REVISION
0	2019/12/06	CHJS	MWBM	ISSUE FOR BID

COWI

APPROVED BY:

DATE:

SCVA DESIGNED BY: 2019/12/06 DATE
CHJS DRAWN BY: 2019/12/06 DATE
MWBM CHECKED BY: 2019/12/06 DATE

CITY OF KIRKLAND
TOTEM LAKE CONNECTION

SOUTH MSE WALL SECTIONS – SHEET 3

SHEET: TLC–S–110
SCALE: AS SHOWN
FILENAME: A088367–S–108–113.dwg

File: D:\Projectwise\COWI\a0301252\A088367-S-108-113.dwg Save Date: Nov 26, 2019 1:22 PM Saved By: CHJS

LEGEND:

1. EXISTING GROUND
2. PERVIOUS ASPHALT W/ SUB BASE
3. MAINTAIN EXISTING GRAVEL SIDEWALK CONNECTION
4. DITCH
5. GRADING NEAR WEST SIDEWALK CONNECTION
6. FILL SLOPE 2H:1V
7. BENCH
8. VEGETATED WALL 1H:3V
9. RAILING W/ FOOTING
10. CUT SLOPE 2H:1V BLENDED INTO EXISTING GRADE
11. NOT USED
12. EXISTING CURB
13. GRAVEL SHOULDER
14. NOT USED
15. MSE GEOGRID REINFORCEMENT
16. EXCAVATION LINE
17. LIGHT POWER CABLE
18. STORM SEWER PIPE
19. ACCESS TRAIL

NOTES:

1. FOR GENERAL STRUCTURAL NOTES SEE DWG TLC–S–101.
2. FUTURE SANITARY SEWER FORCE MAIN NOT SHOWN.

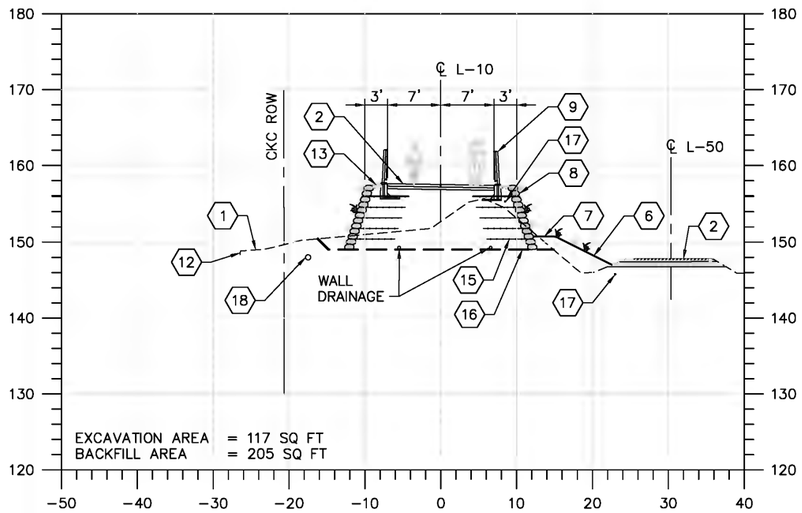

STA 13+80

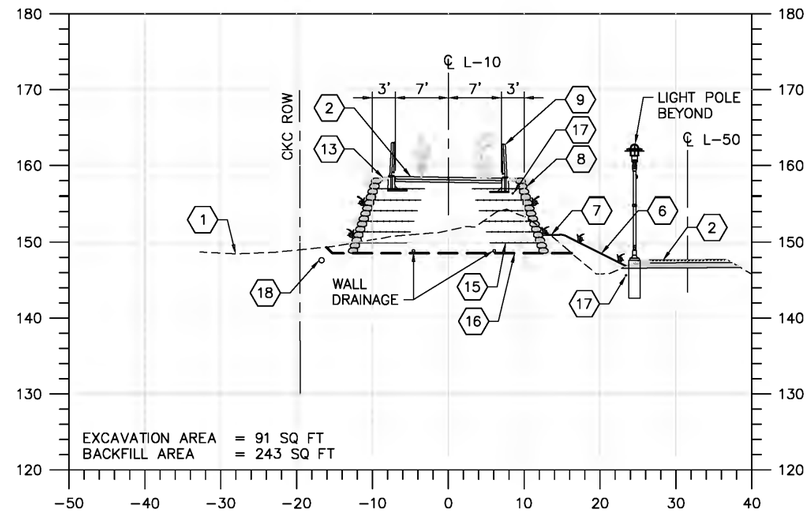

STA 14+00

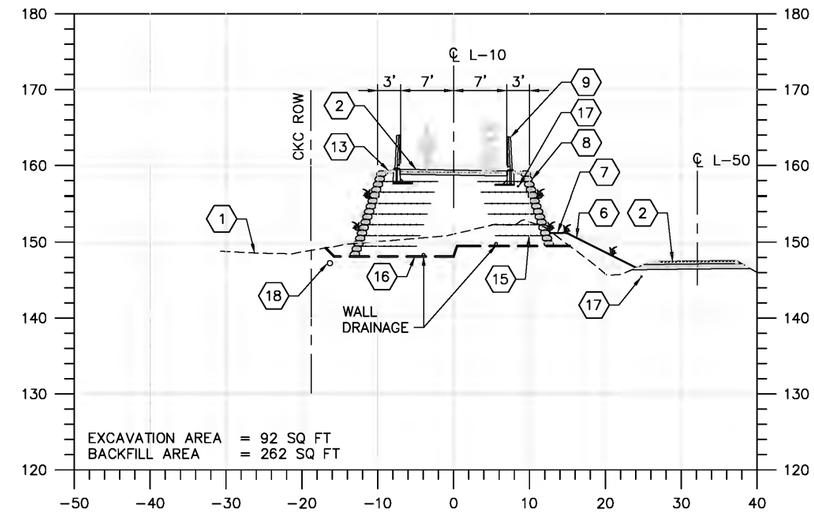

STA 14+20

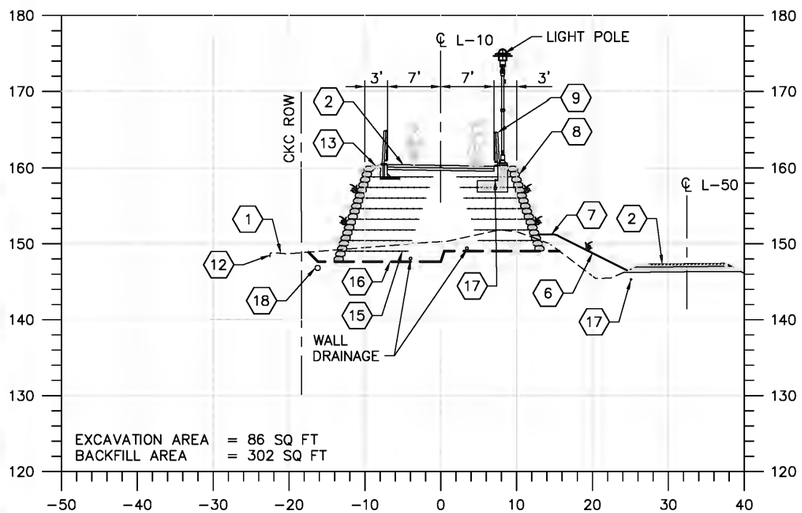

STA 14+40

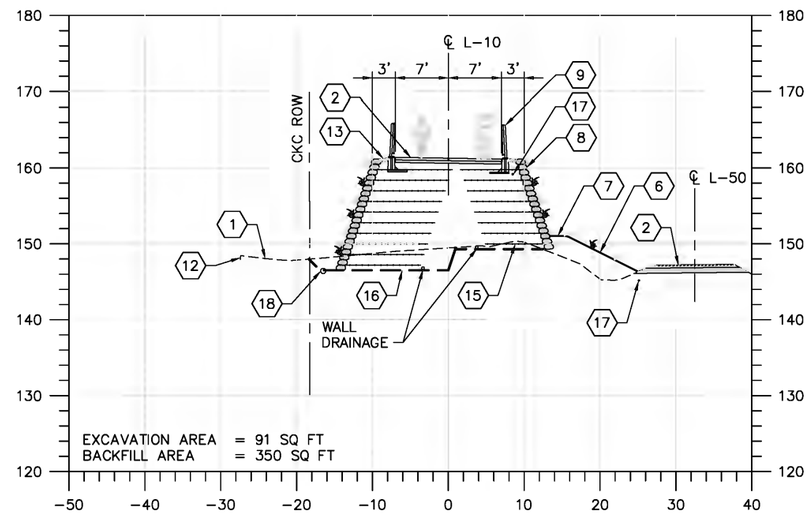

STA 14+60

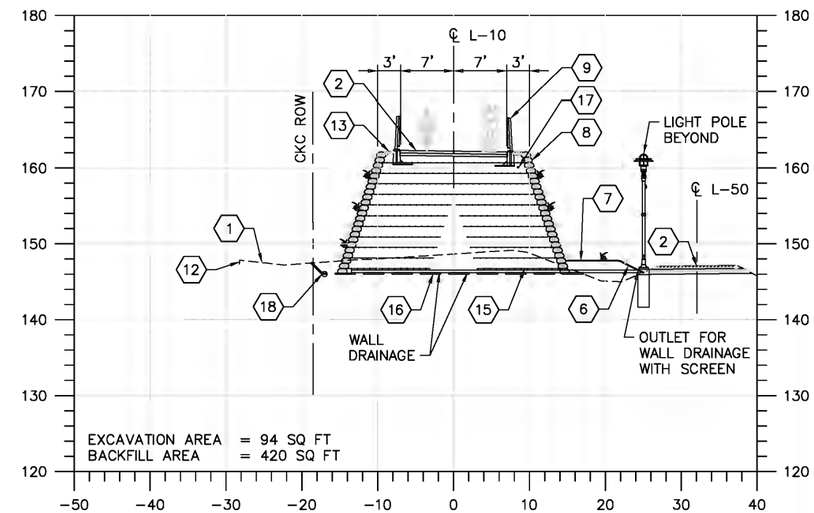

STA 14+80

SOUTH WALL SECTIONS

SCALE: 1" = 10'

CITY OF KIRKLAND
DEPARTMENT OF PUBLIC WORKS
123 FIFTH AVENUE KIRKLAND, WA 98033
(425) 587-3800 www.kirklandwa.gov

NO.	DATE	BY	APPR.	REVISION
0	2019/12/06	CHJS	MWBM	ISSUE FOR BID

COWI

APPROVED BY:

DATE:

SCVA DESIGNED BY. 2019/12/06 DATE
CHJS DRAWN BY. 2019/12/06 DATE
MWBM CHECKED BY. 2019/12/06 DATE

CITY OF KIRKLAND
TOTEM LAKE CONNECTION

SOUTH MSE WALL SECTIONS – SHEET 4

SHEET: TLC–S–111
SCALE: AS SHOWN
FILENAME: A088367–S–108–113.dwg

File: D:\Projectwise\COWI\a0301252\A088367-S-108-113.dwg Save Date: Nov 26, 2019 1:22 PM Saved By: CHJS

LEGEND:

1. EXISTING GROUND
2. PERVIOUS ASPHALT W/ SUB BASE
3. MAINTAIN EXISTING GRAVEL SIDEWALK CONNECTION
4. DITCH
5. GRADING NEAR WEST SIDEWALK CONNECTION
6. FILL SLOPE 2H:1V
7. BENCH
8. VEGETATED WALL 1H:3V
9. RAILING W/ FOOTING
10. CUT SLOPE 2H:1V BLENDED INTO EXISTING GRADE
11. NOT USED
12. EXISTING CURB
13. GRAVEL SHOULDER
14. NOT USED
15. MSE GEOGRID REINFORCEMENT
16. EXCAVATION LINE
17. LIGHT POWER CABLE
18. STORM SEWER PIPE
19. ACCESS TRAIL

NOTES:

1. FOR GENERAL STRUCTURAL NOTES SEE DWG TLC–S–101.
2. FUTURE SANITARY SEWER FORCE MAIN NOT SHOWN.

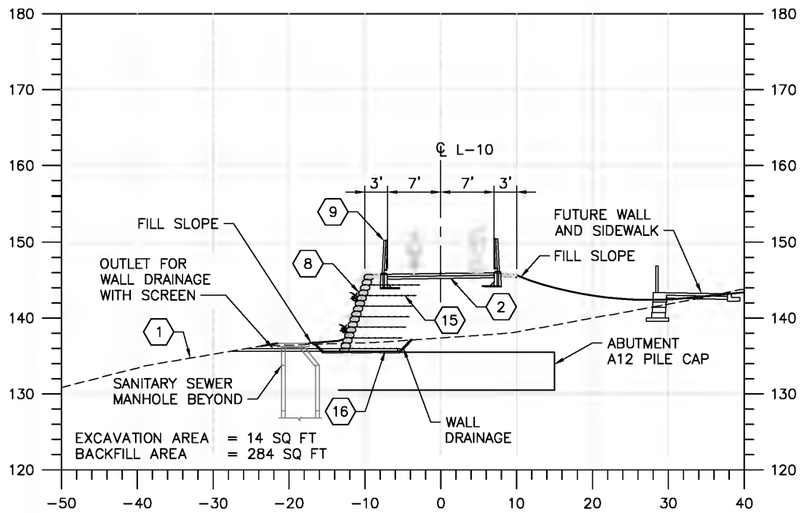

STA 23+00

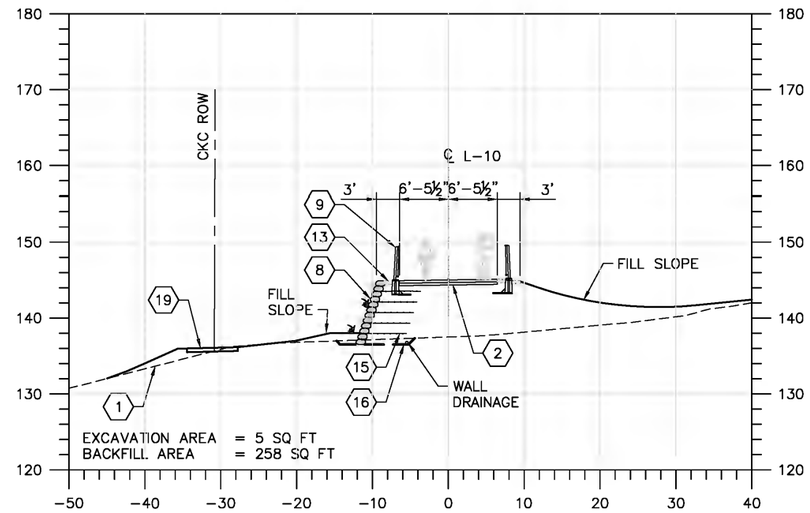

STA 23+20

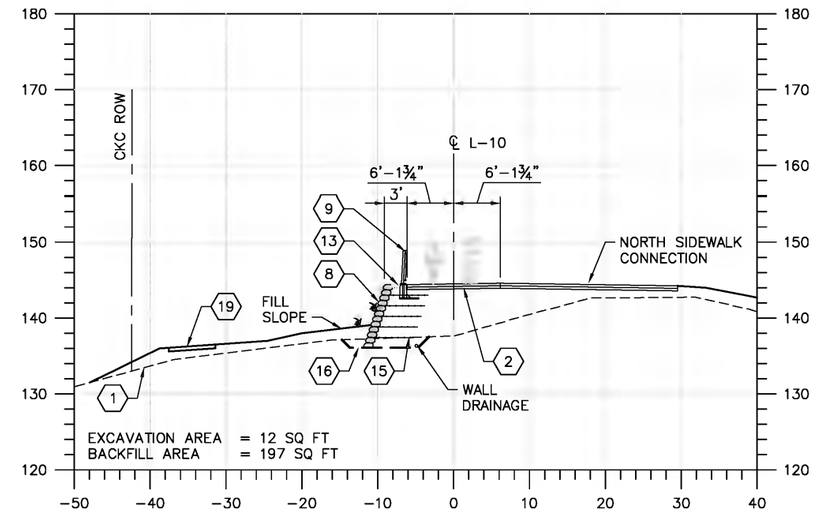

STA 23+40

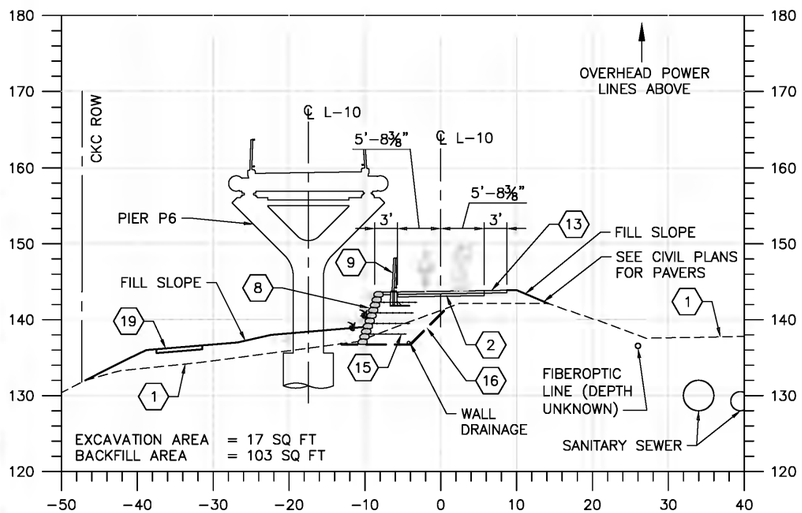

STA 23+60

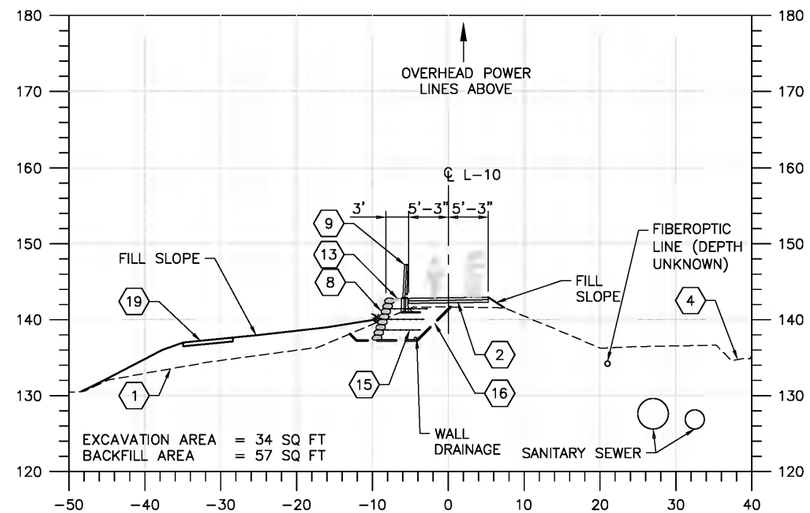

STA 23+80

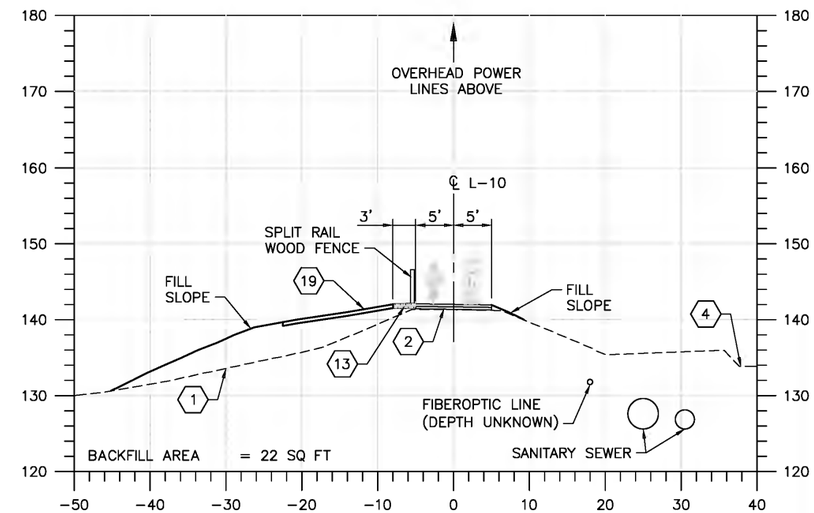

STA 24+00

NORTH WALL SECTIONS

SCALE: 1" = 10'

CITY OF KIRKLAND
DEPARTMENT OF PUBLIC WORKS
123 FIFTH AVENUE KIRKLAND, WA 98033
(425) 587-3800 www.kirklandwa.gov

NO.	DATE	BY	APPR.	REVISION
0	2019/12/06	CHJS	MWBM	ISSUE FOR BID

MATTHEW D. BAUGHMAN — STATE OF WASHINGTON — STRUCTURAL ENGINEER — PROFESSIONAL ENGINEER

COWI

APPROVED BY:

DATE:

SCVA DESIGNED BY: 2019/12/06 DATE
CHJS DRAWN BY: 2019/12/06 DATE
MWBM CHECKED BY: 2019/12/06 DATE

CITY OF KIRKLAND
TOTEM LAKE CONNECTION

NORTH MSE WALL SECTIONS – SHEET 1

SHEET: TLC–S–112
SCALE: AS SHOWN
FILENAME: A088367–S–108–113.dwg

File: D:\Projectwise\COWI\a0301252\A088367-S-108-113.dwg Save Date: Nov 26, 2019 1:22 PM Saved By: CHJS

LEGEND:

1. EXISTING GROUND
2. PERVIOUS ASPHALT W/ SUB BASE
3. MAINTAIN EXISTING GRAVEL SIDEWALK CONNECTION
4. DITCH
5. GRADING NEAR WEST SIDEWALK CONNECTION
6. FILL SLOPE 2H:1V
7. BENCH
8. VEGETATED WALL 1H:3V
9. RAILING W/ FOOTING
10. CUT SLOPE 2H:1V BLENDED INTO EXISTING GRADE
11. NOT USED
12. EXISTING CURB
13. GRAVEL SHOULDER
14. NOT USED
15. MSE GEOGRID REINFORCEMENT
16. EXCAVATION LINE
17. LIGHT POWER CABLE
18. STORM SEWER PIPE
19. ACCESS TRAIL

NOTES:

1. FOR GENERAL STRUCTURAL NOTES SEE DWG TLC–S–101.
2. FUTURE SANITARY SEWER FORCE MAIN NOT SHOWN.

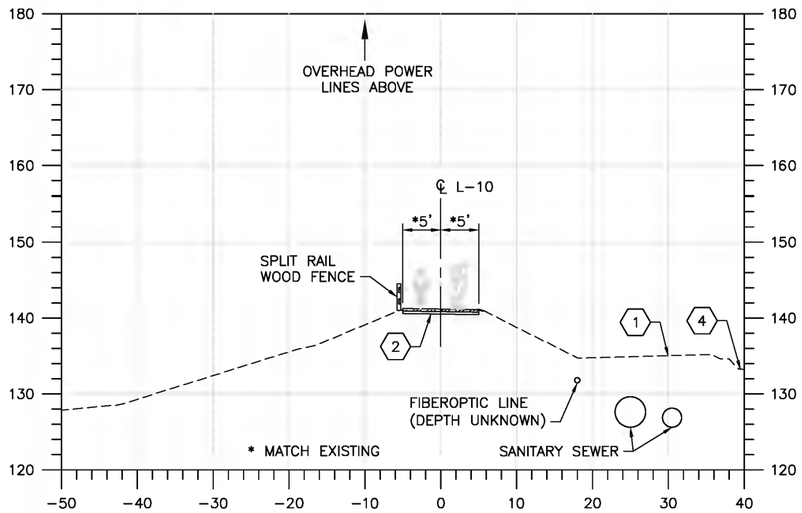

STA 24+20

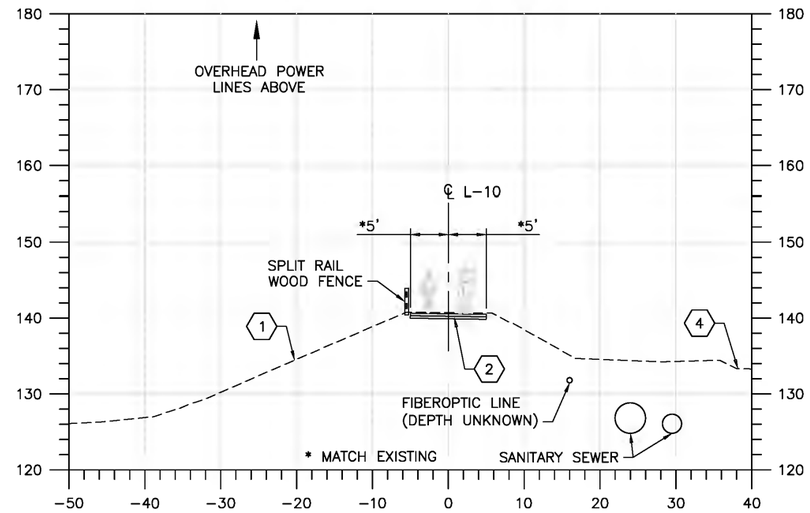

STA 24+40

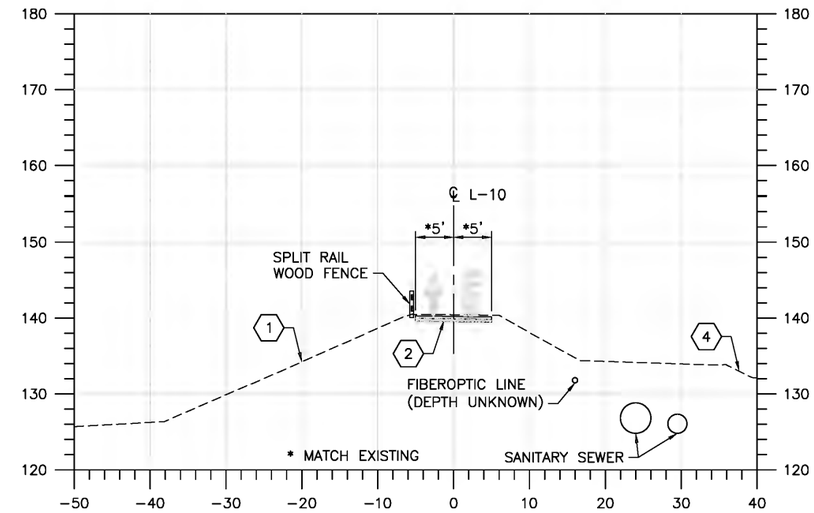

STA 24+60

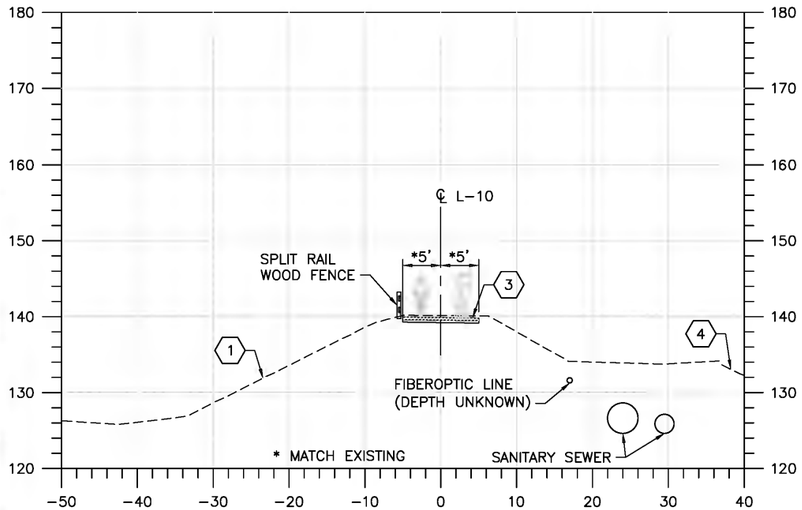

STA 24+80

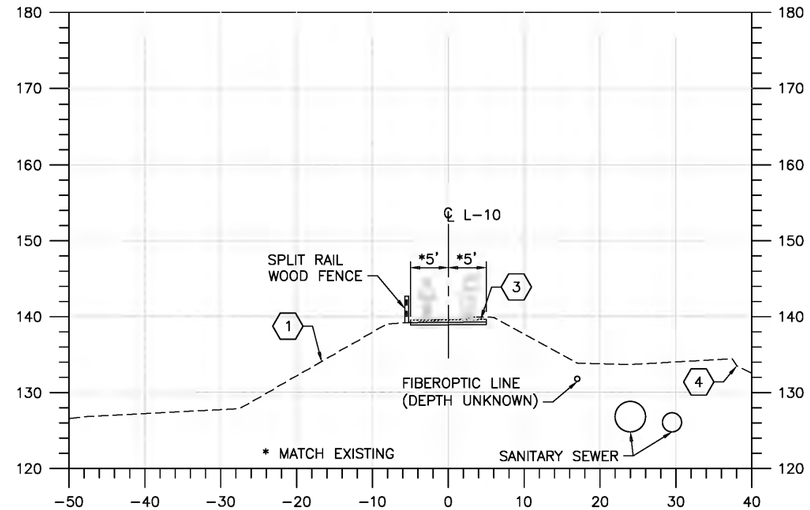

STA 25+00

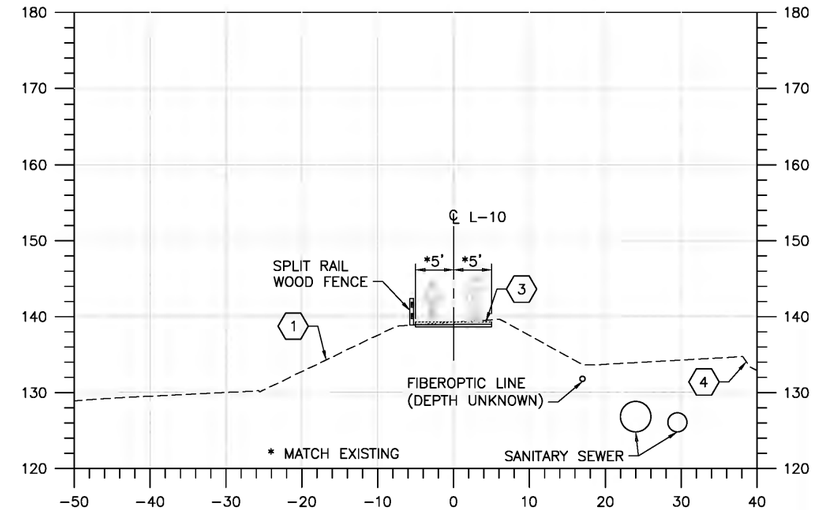

STA 25+20

NORTH WALL SECTIONS

SCALE: 1" = 10'

CITY OF KIRKLAND
DEPARTMENT OF PUBLIC WORKS
123 FIFTH AVENUE KIRKLAND, WA 98033
(425) 587-3800 www.kirklandwa.gov

NO.	DATE	BY	APPR.	REVISION
0	2019/12/06	CHJS	MWBM	ISSUE FOR BID

MATTHEW D. BAUGHMAN — STATE OF WASHINGTON — STRUCTURAL ENGINEER — PROFESSIONAL ENGINEER

COWI

APPROVED BY:

DATE:

SCVA — DESIGNED BY — 2019/12/06 DATE
CHJS — DRAWN BY — 2019/12/06 DATE
MWBM — CHECKED BY — 2019/12/06 DATE

CITY OF KIRKLAND
TOTEM LAKE CONNECTION

NORTH MSE WALL SECTIONS – SHEET 2

SHEET: TLC–S–113
SCALE: AS SHOWN
FILENAME: A088367–S–108–113.dwg

File: D:\Projectwise\COWI\a0301252\A088367-S-108-113.dwg Save Date: Nov 26, 2019 1:22 PM Saved By: CHJS

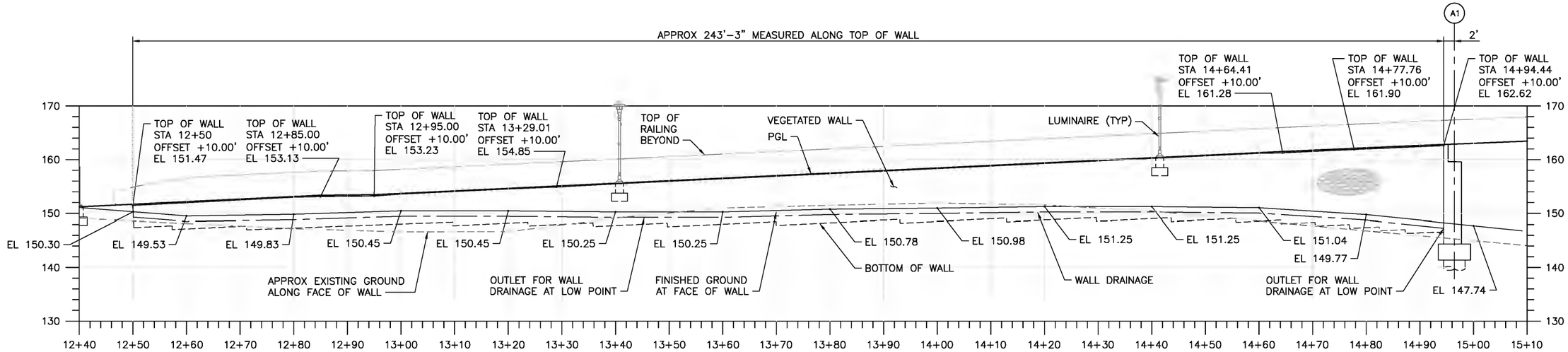

SOUTHEAST WALL ELEVATION

SCALE: 1" = 10'-0"

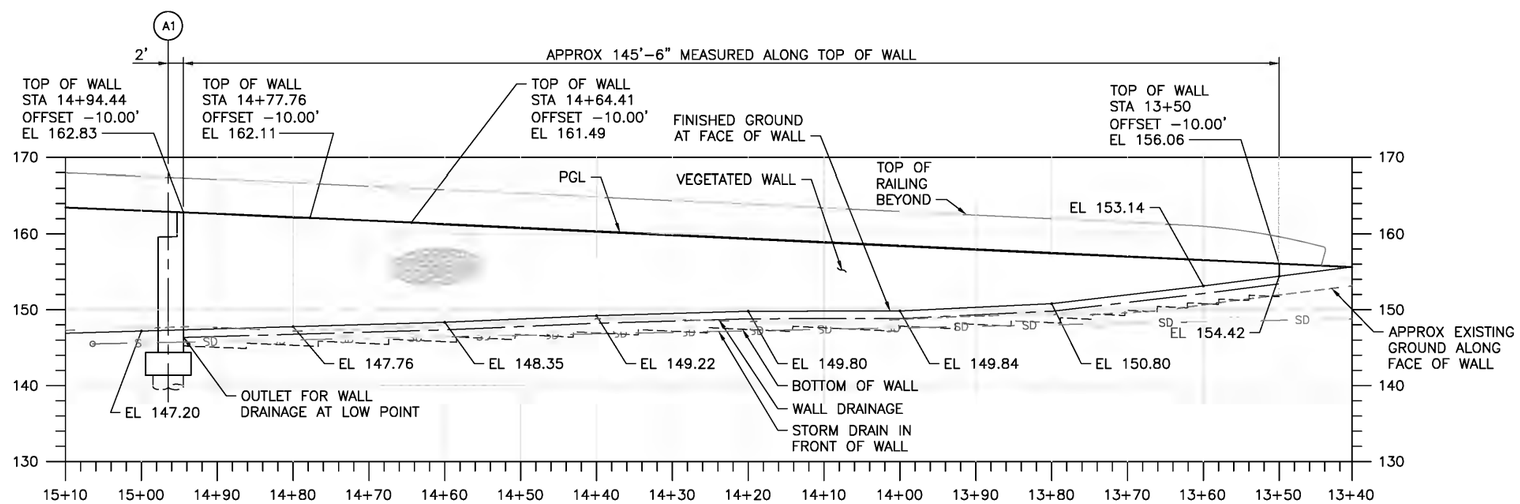

SOUTHWEST WALL ELEVATION

SCALE: 1" = 10'-0"

NOTES:

1. FOR GENERAL STRUCTURAL NOTES SEE DWG TLC-S-101.

File: D:\Projectwise\COWI\d0301252\A088367-S-114-115.dwg Save Date: Nov 26, 2019 1:23 PM Saved By: CHJS

CITY OF KIRKLAND
DEPARTMENT OF PUBLIC WORKS
123 FIFTH AVENUE KIRKLAND, WA 98033
(425) 587-3800 www.kirklandwa.gov

NO.	DATE	BY	APPR.	REVISION
0	2019/12/06	CHJS	MWBM	ISSUE FOR BID

MATTHEW D. BACHMAN — STATE OF WASHINGTON — STRUCTURAL ENGINEER — PROFESSIONAL ENGINEER

COWI

APPROVED BY:

DATE:

SCVA 2019/12/06
DESIGNED BY: DATE

CHJS 2019/12/06
DRAWN BY: DATE

MWBM 2019/12/06
CHECKED BY: DATE

CITY OF KIRKLAND
TOTEM LAKE CONNECTION

MSE WALL ELEVATIONS

SHEET: TLC-S-114
SCALE: AS SHOWN
FILENAME: A088367-S-114-115.dwg

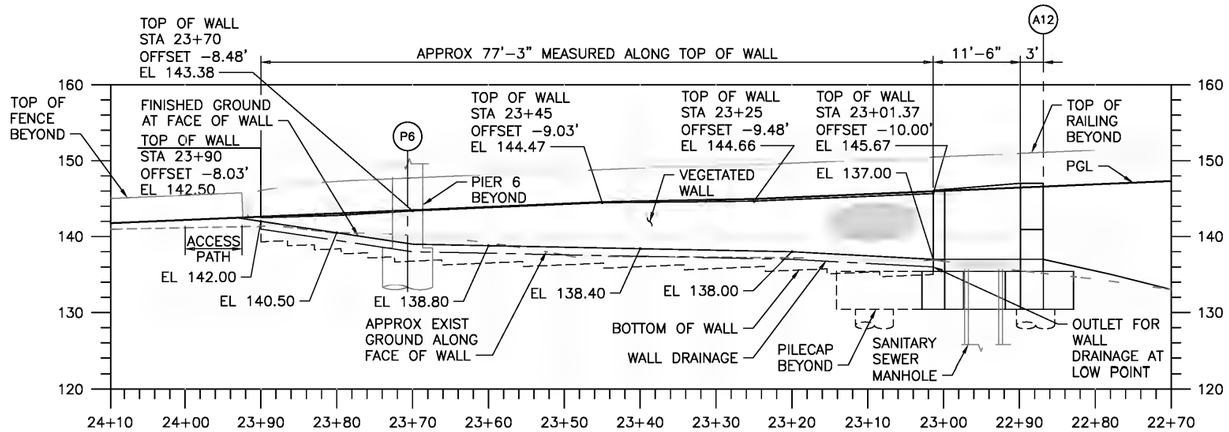

NORTHWEST WALL ELEVATION

SCALE: 1" = 10'−0"

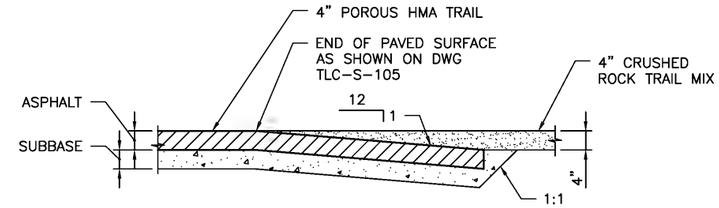

PAVED SURFACE TRANSITION DETAIL

SCALE: ¾" = 1'−0"

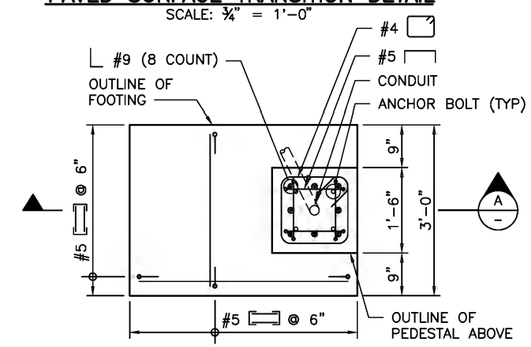

LUMINAIRE FOUNDATION PLAN

SCALE: ¾" = 1'−0"

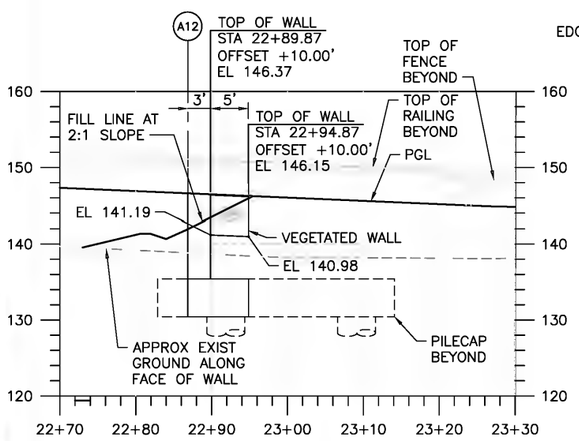

NORTHEAST WALL ELEVATION

SCALE: 1" = 10'−0"

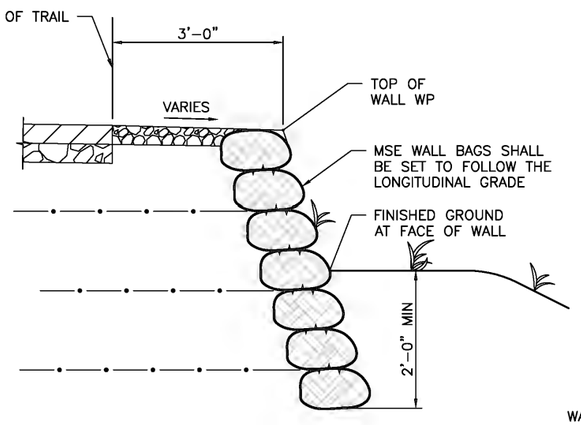

TYPICAL WALL SECTION

SCALE: ¾" = 1'−0"

(SOUTHEAST WALL SHOWN, OTHERS SIMILAR)

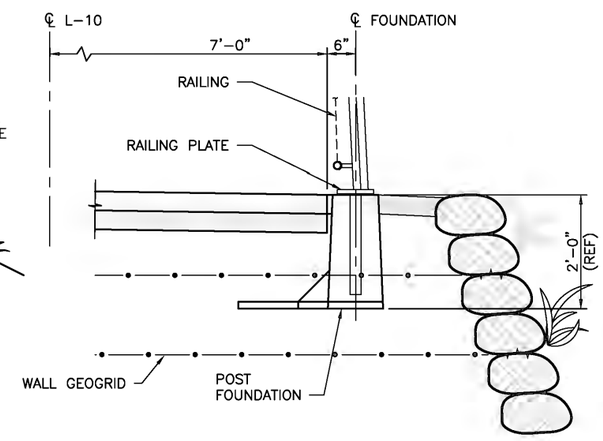

RAILING FOUNDATION DETAIL

SCALE: ¾" = 1'−0"

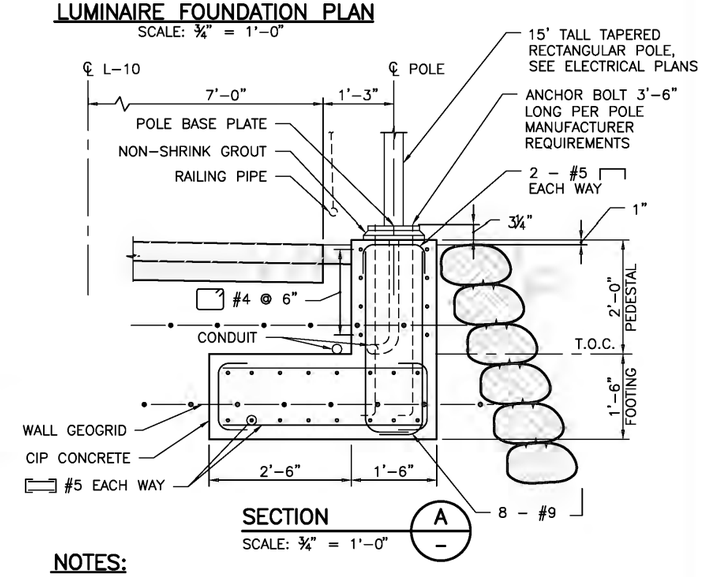

SECTION A

SCALE: ¾" = 1'−0"

NOTES:

1. FOR GENERAL STRUCTURAL NOTES SEE DWG TLC−S−101.
2. LUMINAIRE FOUNDATION IS DESIGNED FOR A FACTORED MOMENT OF 2.4 K−FT AND SHEAR OF 500−LBS ACTING AT THE UNDERSIDE OF BASE PLATE. CONTRACTOR SHALL CONFIRM ADEQUACY OF FOUNDATION FOR LOADS DIFFERENT FROM THIS.
3. LUMINAIRES ALONG L−50 SHALL USE COK STANDARD LIGHT POLE FOUNDATION PER STANDARD PLAN CK−R.47A, WITH PILE MODIFIED TO BE 5'−0" DEEP. TOP OF FOUNDATION SHALL PROJECT 1" MIN ABOVE FINISHED GROUND.

CITY OF KIRKLAND
DEPARTMENT OF PUBLIC WORKS
123 FIFTH AVENUE KIRKLAND, WA 98033
(425) 587-3800 www.kirklandwa.gov

NO.	DATE	BY	APPR.	REVISION
0	2019/12/06	CHJS	MWBM	ISSUE FOR BID

COWI

APPROVED BY:

DATE:

SCVA 2019/12/06 DESIGNED BY: DATE
CHJS 2019/12/06 DRAWN BY: DATE
MWBM 2019/12/06 CHECKED BY: DATE

CITY OF KIRKLAND
TOTEM LAKE CONNECTION

MSE WALL ELEVATIONS AND DETAILS

SHEET: TLC−S−115
SCALE: AS SHOWN
FILENAME: A088367−S−114−115.dwg

File: D:\Projectwise\COWI\w0301252\A088367−S−114−115.dwg Save Date: Nov 26, 2019 1:23 PM Saved By: CHJS

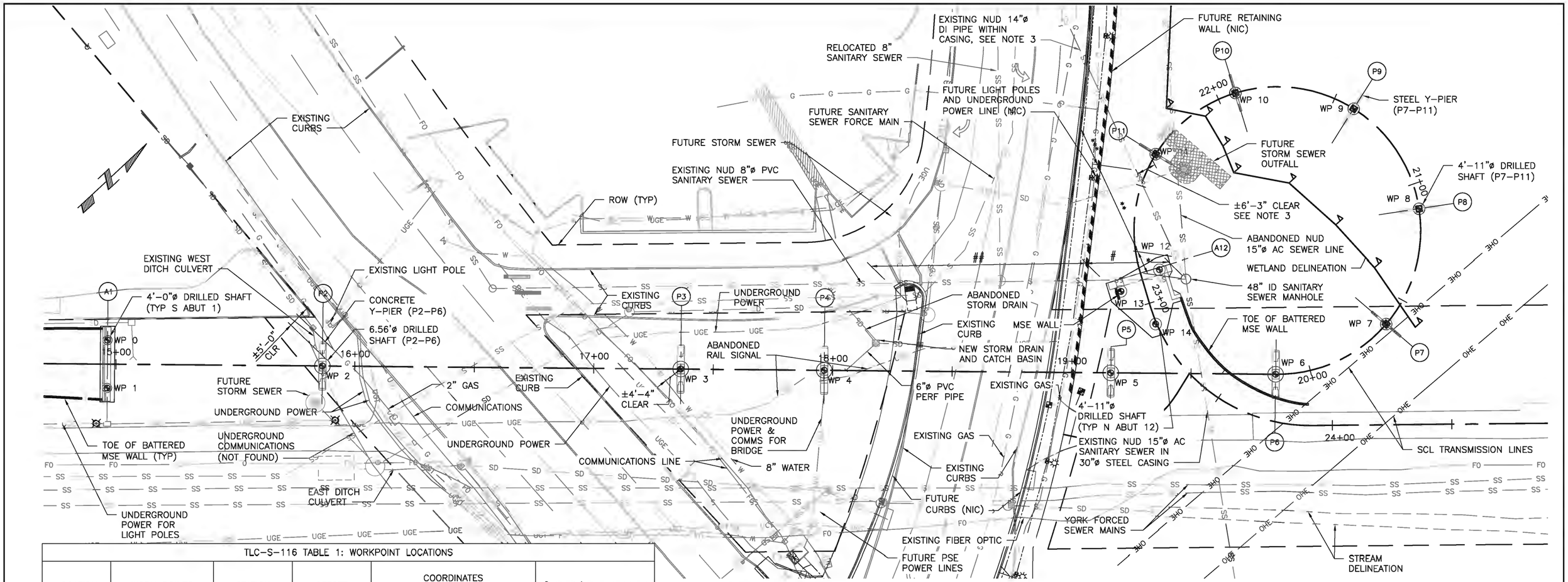

FOUNDATION PLAN

SCALE: 1" = 20'

TLC-S-116 TABLE 1: WORKPOINT LOCATIONS

LOCATION	WORK POINTS	STATION	OFFSET	COORDINATES		℄ PIER/ABUT AZIMUTH
				NORTHING	EASTING	
SOUTH ABUTMENT A1	WP 0	14+96.44	10'-0" LT	261344.55	1309543.72	-47.34°
	WP 1	14+96.44	10'-0" RT	261331.00	1309558.43	
PIER P2	WP 2	15+86.44	–	261403.96	1309612.07	-47.34°
PIER P3	WP 3	17+36.44	–	261514.27	1309713.72	-47.34°
PIER P4	WP 4	17+96.48	–	261558.42	1309754.40	-47.34°
PIER P5	WP 5	19+16.44	–	261646.63	1309835.70	-47.34°
PIER P6	WP 6	19+85.44	–	261697.38	1309882.45	-47.34°
PIER P7	WP 7	20+37.86	–	261745.71	1309897.97	+82.76°
PIER P8	WP 8	20+89.38	–	261788.15	1309871.62	+33.57°
PIER P9	WP 9	21+40.90	–	261795.94	1309822.28	-15.63°
PIER P10	WP 10	21+92.42	–	261763.68	1309784.14	-64.83°
PIER P11	WP 11	22+35.35	–	261721.79	1309780.72	+74.17°
NORTH ABUTMENT A12	WP 12	22+87.87	8'-0" LT	261690.56	1309817.44	+25.41°
	WP 13	22+91.87	10'-0" RT	261672.59	1309813.33	
	WP 14	23+09.09	0'-5⅛" RT	261674.22	1309833.20	

NOTES:

1. FOR GENERAL STRUCTURAL NOTES SEE DWG TLC-S-101.
2. THIS INFORMATION HAS BEEN ASSEMBLED ON THE CITY OF KIRKLAND'S GEOGRAPHIC INFORMATION SYSTEM. DATA PROVIDED HEREIN IS DERIVED FROM A NUMBER OF SOURCES WITH VARYING LEVELS OF ACCURACY. THE CITY OF KIRKLAND DISCLAIMS ALL RESPONSIBILITY FOR THE ACCURACY OF COMPLETENESS OF INFORMATION CONTAINED HEREIN.
3. PER NUD RECORD DRAWING, EXISTING NUD SANITARY SEWER IS D.I. CL 52 PIPE (RESTRAINED JOINT) INSIDE CASING AS FOLLOWS:

   * = 10' – 36" STEEL CASING GROUT FILLED
   ** = 40' – NOT CASED (BORE PIT)
   *** = 42" – STEEL CASING GROUT FILLED – 0.50 WALL

4. PER NUD RECORD DRAWING, EXISTING NUD SANITARY SEWER IS 8" PVC PIPE INSIDE CASING AS FOLLOWS:

   # = 34.5' – NOT CASED
   ## = 90' – 18" STEEL CASING SAND FILLED

   8" SEWER TO BE ABANDONED NORTH OF NEW MANHOLE IN TOTEM LAKE BOULEVARD.

CITY OF KIRKLAND
DEPARTMENT OF PUBLIC WORKS
123 FIFTH AVENUE KIRKLAND, WA 98033
(425) 587-3800 www.kirklandwa.gov

NO.	DATE	BY	APPR.	REVISION
0	2019/12/06	CHJS	MWBM	ISSUE FOR BID

MATTHEW D. BATCHMAN, STATE OF WASHINGTON, STRUCTURAL ENGINEER, PROFESSIONAL ENGINEER

COWI

APPROVED BY:

DATE:

SCVA DESIGNED BY: 2019/12/06 DATE
CHJS DRAWN BY: 2019/12/06 DATE
MWBM CHECKED BY: 2019/12/06 DATE

CITY OF KIRKLAND
TOTEM LAKE CONNECTION

FOUNDATION LAYOUT

SHEET: TLC-S-116
SCALE: AS SHOWN
FILENAME: A088367-S-116.dwg

File: D:\projectwise\cow\d0301252\A088367-S-116.dwg Save Date: Nov 26, 2019 1:14 PM Saved By: CHJS

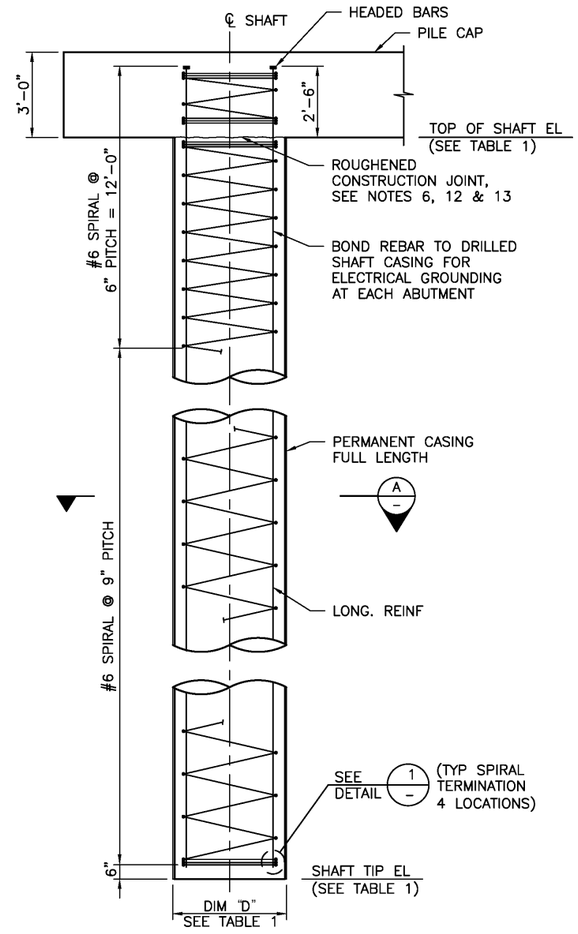

TYPICAL ELEVATION – A1

SCALE: ⅜" = 1'-0"

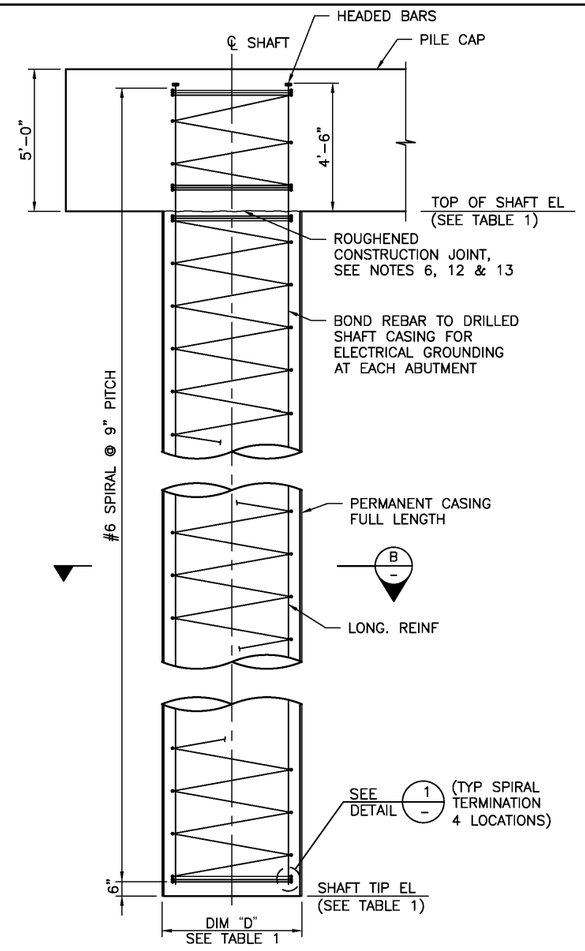

TYPICAL ELEVATION – A12

SCALE: ⅜" = 1'-0"

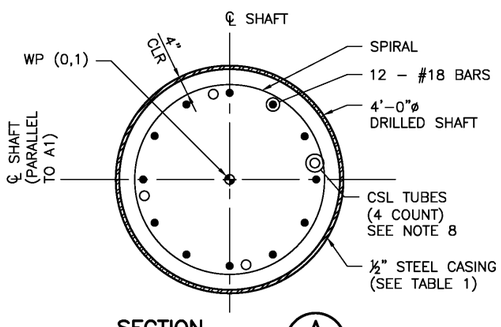

SECTION A –

SCALE: ¾" = 1'-0"

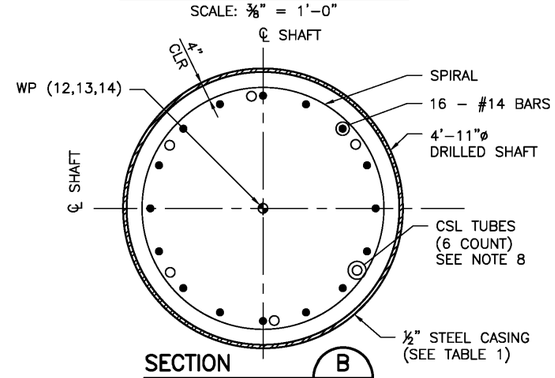

SECTION B –

SCALE: ¾" = 1'-0"

TLC–S–117 TABLE 1: SHAFT DETAILS				
ABUTMENT	TOP OF SHAFT ELEVATION	CASING LENGTH	SHAFT TIP ELEVATION	CASING DIAMETER "D"
A1	141.37	35'–0"	106.37	4'–0"
A12	130.52	55'–0"	75.52	4'–11"

TLC–S–117 TABLE 2: WELD DIMENSIONS (IN)				
	BAR SIZE	S	E	L (LENGTH)
SPIRALS	#6	⅜	3/16	6

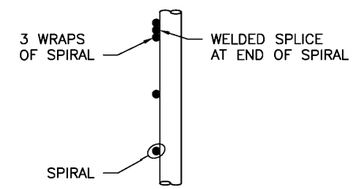

SPIRAL TERMINATION DETAIL 1 – / 1 118 / 1 119

SCALE: NTS

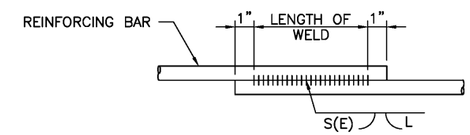

WELDED LAP SPLICE DETAIL

SCALE: NTS

(WELDING SHALL MEET THE REQUIREMENTS OF STD. SPEC. 6–02.3(24)E. FOR WELD DIMENSIONS, SEE TABLE 2.)

NOTES:

1. FOR GENERAL STRUCTURAL NOTES SEE DWG TLC–S–101.
2. ALL DRILLING OPERATIONS FOR DRILLED SHAFT FOUNDATIONS SCHEDULED ON THIS SHEET SHALL BE MONITORED BY THE RESIDENT ENGINEER.
3. THESE NOTES PERTAIN ONLY TO THE DRILLED SHAFT TYPE DETAILED ON THIS SHEET.
4. DRILLED SHAFT TIP ELEVATIONS SHALL BE VERIFIED BY THE GEOTECHNICAL ENGINEER PRIOR TO PLACEMENT OF REINFORCING STEEL AND CONCRETE.
5. THE EXACT LOCATION AND DEPTH OF ALL UNDERGROUND UTILITIES SHALL BE CONFIRMED BY THE CONTRACTOR PRIOR TO CONSTRUCTION.
6. PRIOR TO CASTING CONNECTION TO PILE CAP, CONTRACTOR SHALL REMOVE LAITANCE DOWN TO SOUND CONCRETE AT THE CONSTRUCTION JOINT AND SHALL CLEAN EXPOSED REINFORCEMENT.
7. LAP LENGTH FOR TRANSVERSE REINFORCEMENT SHALL BE 48 BAR DIAMETERS MINIMUM.
8. STEEL PIPES PROVIDED AS ACCESS TUBES FOR CSL TESTING SHALL BE IN ACCORDANCE WITH THE CONTRACT SPECIFICATIONS.
9. THE CONTRACTOR SHALL PROVIDE ADEQUATE BRACING TO MAINTAIN THE REINFORCEMENT CAGE STABILITY AT ALL CONSTRUCTION STAGES.
10. LAP SPLICES SHALL NOT BE PERMITTED FOR LONGITUDINAL REINFORCEMENT. MECHANICAL SPLICES ARE PERMITTED WHERE THEY ARE STAGGERED AT 24" IN AN INDIVIDUAL BUNDLE.
11. ALL WELDS FOR STEEL CASING SHALL BE COMPLETE JOINT PENETRATION GROOVE WELDS.
12. AS–BUILT LOCATIONS AND ELEVATIONS OF TOP OF SHAFTS SHALL BE SUBMITTED TO ENGINEER OF RECORD (EOR) PRIOR TO PROCEEDING WITH ABUTMENT CONSTRUCTION.
13. PROVIDE 1½" CLEAR FROM TOP OF SPIRAL TO LOWEST POINT OF CONSTRUCTION JOINT. VERTICAL BREAK IN SPIRAL TO ALLOW PLACEMENT OF BOTTOM MAT OF PILE CAP REINFORCEMENT, SHALL NOT EXCEED 6" AT A1 OR 9" AT A12.

CITY OF KIRKLAND
DEPARTMENT OF PUBLIC WORKS
123 FIFTH AVENUE KIRKLAND, WA 98033
(425) 587-3800 www.kirklandwa.gov

NO.	DATE	BY	APPR.	REVISION
0	2019/12/06	CHJS	MWBM	ISSUE FOR BID

MATTHEW D. BACHMAN – STATE OF WASHINGTON – STRUCTURAL ENGINEER – PROFESSIONAL ENGINEER

COWI

APPROVED BY:

DATE:

SCVA DESIGNED BY.	2019/12/06 DATE
CHJS DRAWN BY.	2019/12/06 DATE
MWBM CHECKED BY.	2019/12/06 DATE

CITY OF KIRKLAND
TOTEM LAKE CONNECTION

ABUTMENT FOUNDATIONS

SHEET: TLC–S–117

SCALE: AS SHOWN

FILENAME: A088367–S–117.dwg

File: D:\Projectwise\COWI\d0301252\A088367-S-117.dwg Save Date: Nov 26, 2019 1:22 PM Saved By: CHJS

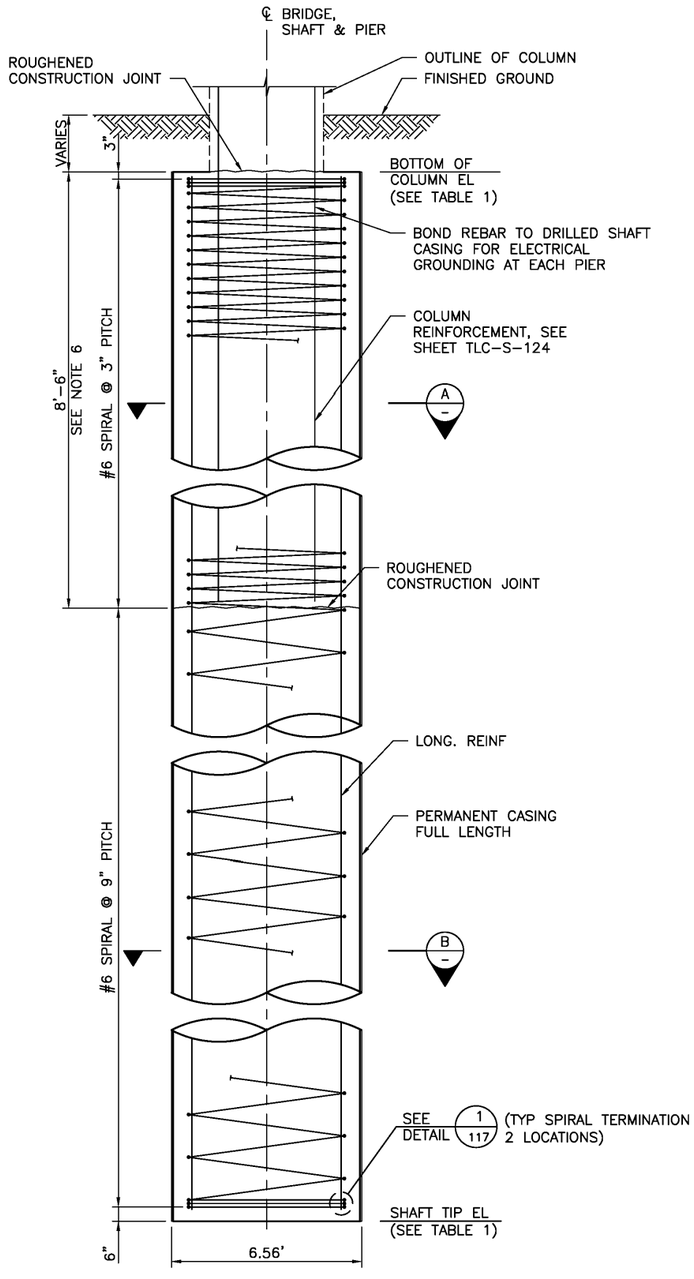

TYPICAL ELEVATION

SCALE: ⅜" = 1'-0"

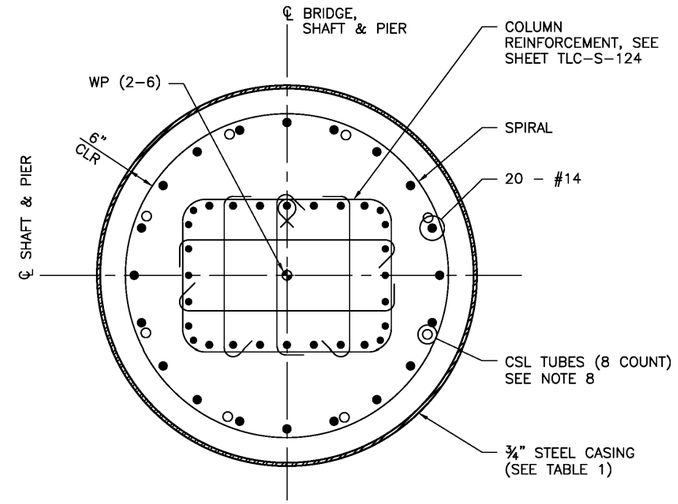

SECTION A

SCALE: ¾" = 1'-0"

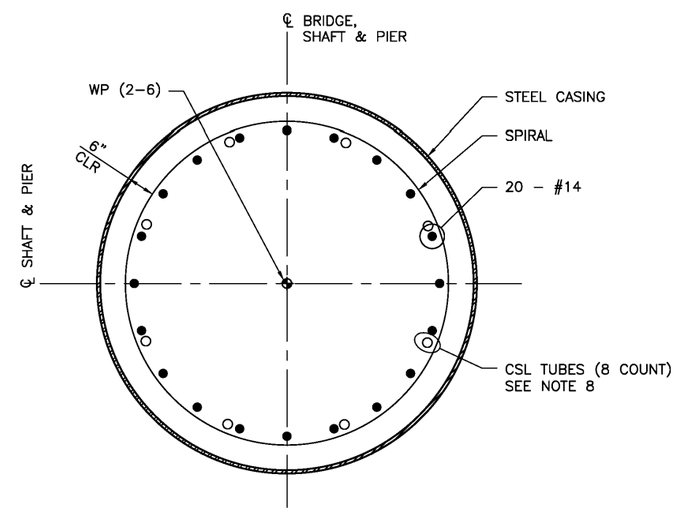

SECTION B

SCALE: ¾" = 1'-0"

TLC-S-118 TABLE 1: SHAFT DETAILS			
PIER	BOTTOM OF COLUMN ELEVATION	CASING LENGTH	SHAFT TIP ELEVATION
P2	142.86	60'-0"	82.86
P3	143.07	60'-0"	83.07
P4	143.29	62'-0"	81.29
P5	139.57	60'-0"	79.57
P6	136.61	68'-0"	68.61

NOTES:

1. FOR GENERAL STRUCTURAL NOTES SEE DWG TLC-S-101.
2. ALL DRILLING OPERATIONS FOR DRILLED SHAFT FOUNDATIONS SCHEDULED ON THIS SHEET SHALL BE MONITORED BY THE RESIDENT ENGINEER.
3. THESE NOTES PERTAIN ONLY TO THE DRILLED SHAFT TYPE DETAILED ON THIS SHEET.
4. DRILLED SHAFT TIP ELEVATIONS SHALL BE VERIFIED BY THE GEOTECHNICAL ENGINEER PRIOR TO PLACEMENT OF REINFORCING STEEL AND CONCRETE.
5. THE EXACT LOCATION AND DEPTH OF ALL UNDERGROUND UTILITIES SHALL BE CONFIRMED BY THE CONTRACTOR PRIOR TO CONSTRUCTION.
6. PRIOR TO CASTING CONNECTION TO COLUMN REINFORCEMENT, CONTRACTOR SHALL REMOVE LAITANCE DOWN TO SOUND CONCRETE AT THE CONSTRUCTION JOINT AND SHALL CLEAN EXPOSED REINFORCEMENT.
7. LAP LENGTH FOR TRANSVERSE REINFORCEMENT SHALL BE 48 BAR DIAMETERS MINIMUM.
8. STEEL PIPES PROVIDED AS ACCESS TUBES FOR CSL TESTING SHALL BE IN ACCORDANCE WITH THE CONTRACT SPECIFICATIONS.
9. THE CONTRACTOR SHALL PROVIDE ADEQUATE BRACING TO MAINTAIN THE REINFORCEMENT CAGE STABILITY AT ALL CONSTRUCTION STAGES.
10. LAP SPLICES SHALL NOT BE PERMITTED FOR LONGITUDINAL REINFORCEMENT. MECHANICAL SPLICES ARE PERMITTED WHERE THEY ARE STAGGERED AT 24".
11. ALL WELDS FOR STEEL CASING SHALL BE COMPLETE JOINT PENETRATION GROOVE WELDS.
12. AS-BUILT LOCATIONS AND ELEVATIONS OF SHAFTS SHALL BE SENT TO ENGINEER OF RECORD (EOR) PRIOR TO PROCEEDING WITH PIER CONSTRUCTION.

CITY OF KIRKLAND
DEPARTMENT OF PUBLIC WORKS
123 FIFTH AVENUE KIRKLAND, WA 98033
(425) 587-3800 www.kirklandwa.gov

NO.	DATE	BY	APPR.	REVISION
0	2019/12/06	CHJS	MWBM	ISSUE FOR BID

MATTHEW D. BAUGHMAN, STATE OF WASHINGTON, STRUCTURAL ENGINEER, PROFESSIONAL ENGINEER

COWI

APPROVED BY:

DATE:

SCVA DESIGNED BY. 2019/12/06 DATE
CHJS DRAWN BY. 2019/12/06 DATE
MWBM CHECKED BY. 2019/12/06 DATE

CITY OF KIRKLAND
TOTEM LAKE CONNECTION

CONCRETE Y-PIER FOUNDATIONS

SHEET: TLC-S-118
SCALE: AS SHOWN
FILENAME: A088367-S-118.dwg

File: D:\Projectwise\COWI\d0301252\A088367-S-118.dwg Save Date: Nov 26, 2019 1:21 PM Saved By: CHJS

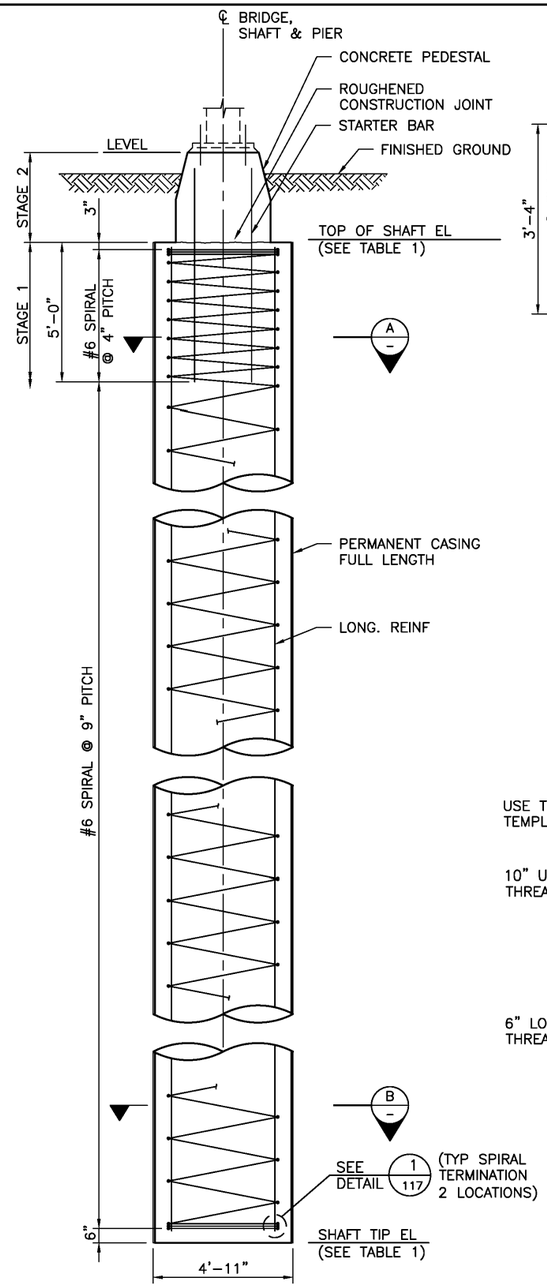

TYPICAL ELEVATION

SCALE: ⅜" = 1'-0"

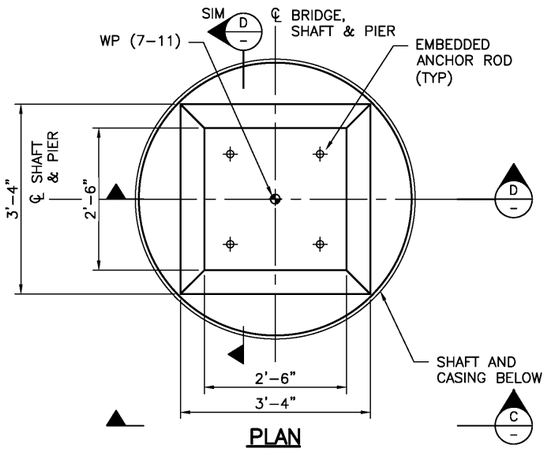

PLAN

SCALE: ¾" = 1'-0"

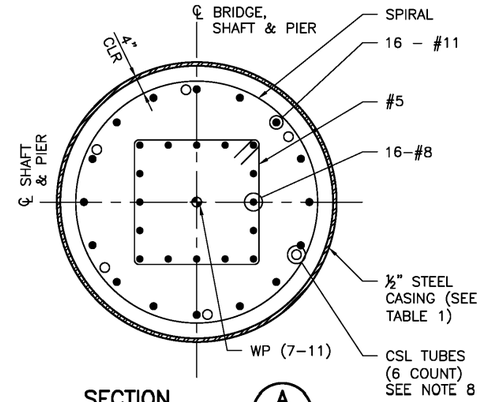

SECTION A

SCALE: ¾" = 1'-0"

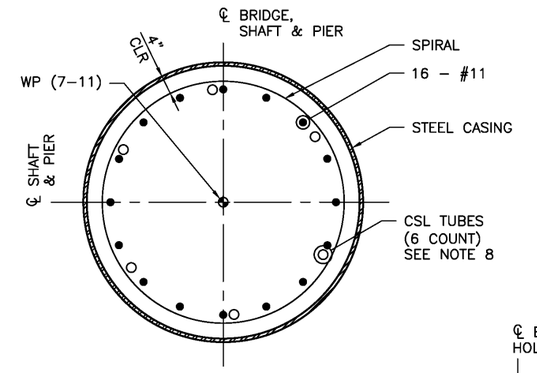

SECTION B

SCALE: ¾" = 1'-0"

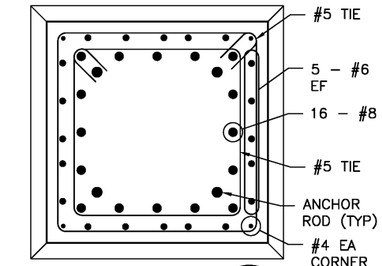

SECTION E

SCALE: 1" = 1'-0"

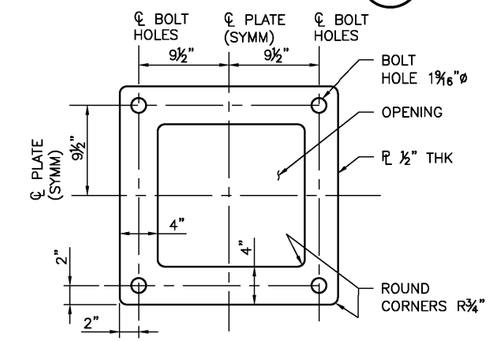

TOP & BOTTOM TEMPLATE PLATE DETAIL

SCALE: 1½" = 1'-0"

TLC-S-119 TABLE 1: SHAFT DETAILS			
PIER	TOP OF SHAFT ELEVATION	CASING LENGTH	SHAFT TIP ELEVATION
P7	126.80	65'-0"	61.80
P8	123.25	65'-6"	57.75
P9	122.54	65'-0"	57.54
P10	123.07	65'-0"	58.07
P11	126.81	65'-0"	61.81

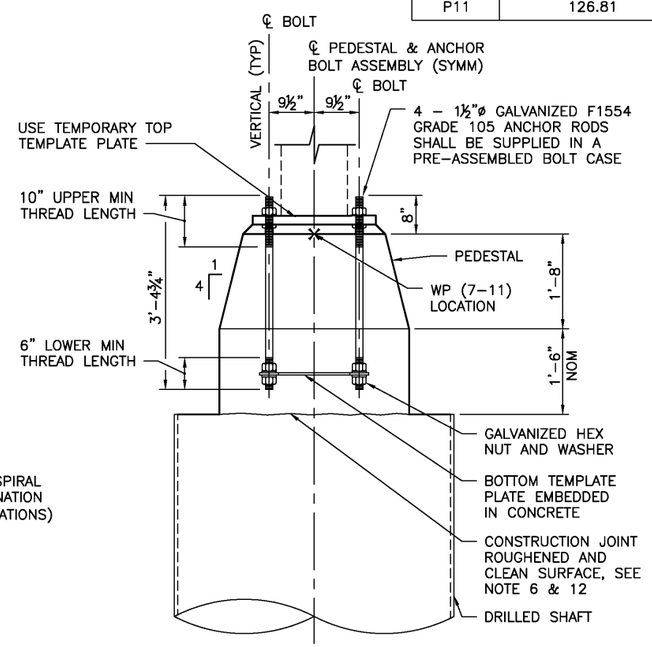

SECTION C

SCALE: ¾" = 1'-0"

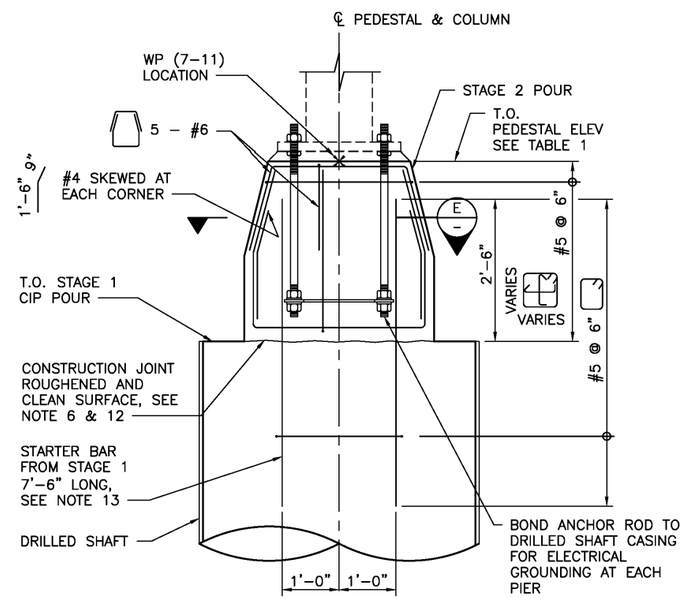

SECTION D

SCALE: ¾" = 1'-0"

(SHAFT REINFORCEMENT NOT SHOWN FOR CLARITY)

NOTES:

1. FOR GENERAL STRUCTURAL NOTES SEE DWG TLC-S-101.
2. ALL DRILLING OPERATIONS FOR DRILLED SHAFT FOUNDATIONS SCHEDULED ON THIS SHEET SHALL BE MONITORED BY THE RESIDENT ENGINEER.
3. THESE NOTES PERTAIN ONLY TO THE DRILLED SHAFT TYPE DETAILED ON THIS SHEET.
4. DRILLED SHAFT TIP ELEVATIONS SHALL BE VERIFIED BY THE GEOTECHNICAL ENGINEER PRIOR TO PLACEMENT OF REINFORCING STEEL AND CONCRETE.
5. THE EXACT LOCATION AND DEPTH OF ALL UNDERGROUND UTILITIES SHALL BE CONFIRMED BY THE CONTRACTOR PRIOR TO CONSTRUCTION.
6. PRIOR TO CASTING PEDESTAL, THE CONTRACTOR SHALL REMOVE LAITANCE DOWN TO SOUND CONCRETE AT THE CONSTRUCTION JOINT AND SHALL CLEAN EXPOSED REINFORCEMENT.
7. LAP LENGTH FOR TRANSVERSE REINFORCEMENT SHALL BE 48 BAR DIAMETERS MINIMUM.
8. STEEL PIPES PROVIDED AS ACCESS TUBES FOR CSL TESTING SHALL BE IN ACCORDANCE WITH THE CONTRACT SPECIFICATIONS.
9. THE CONTRACTOR SHALL PROVIDE ADEQUATE BRACING TO MAINTAIN THE REINFORCEMENT CAGE STABILITY AT ALL CONSTRUCTION STAGES.
10. LAP SPLICES SHALL NOT BE PERMITTED FOR LONGITUDINAL REINFORCEMENT. MECHANICAL SPLICES ARE PERMITTED WHERE THEY ARE STAGGERED AT 24" IN AN INDIVIDUAL BUNDLE.
11. ALL WELDS FOR STEEL CASING SHALL BE COMPLETE JOINT PENETRATION GROOVE WELDS.
12. AS-BUILT LOCATIONS AND ELEVATIONS OF TOP OF SHAFTS SHALL BE SENT TO ENGINEER OF RECORD (EOR) PRIOR TO PROCEEDING WITH PIER CONSTRUCTION.
13. STARTER BARS SHALL BE SET TO TARGET WP COORDINATES WHICH MAY DIFFER FROM CONSTRUCTED POSITION OF SHAFT.

CITY OF KIRKLAND
DEPARTMENT OF PUBLIC WORKS
123 FIFTH AVENUE KIRKLAND, WA 98033
(425) 587-3800 www.kirklandwa.gov

NO.	DATE	BY	APPR.	REVISION
0	2019/12/06	CHJS	MWBM	ISSUE FOR BID

MATTHEW D. BACHMAN — STATE OF WASHINGTON — STRUCTURAL ENGINEER — PROFESSIONAL ENGINEER

COWI

APPROVED BY:

DATE:

SCVA 2019/12/06 DESIGNED BY: DATE
CHJS 2019/12/06 DRAWN BY: DATE
MWBM 2019/12/06 CHECKED BY: DATE

CITY OF KIRKLAND
TOTEM LAKE CONNECTION

STEEL Y-PIER FOUNDATIONS

SHEET: TLC-S-119
SCALE: AS SHOWN
FILENAME: A088367-S-119.dwg

File: D:\Projectwise\COWI\d0301252\A088367-S-119.dwg Save Date: Nov 26, 2019 1:21 PM Saved By: CHJS

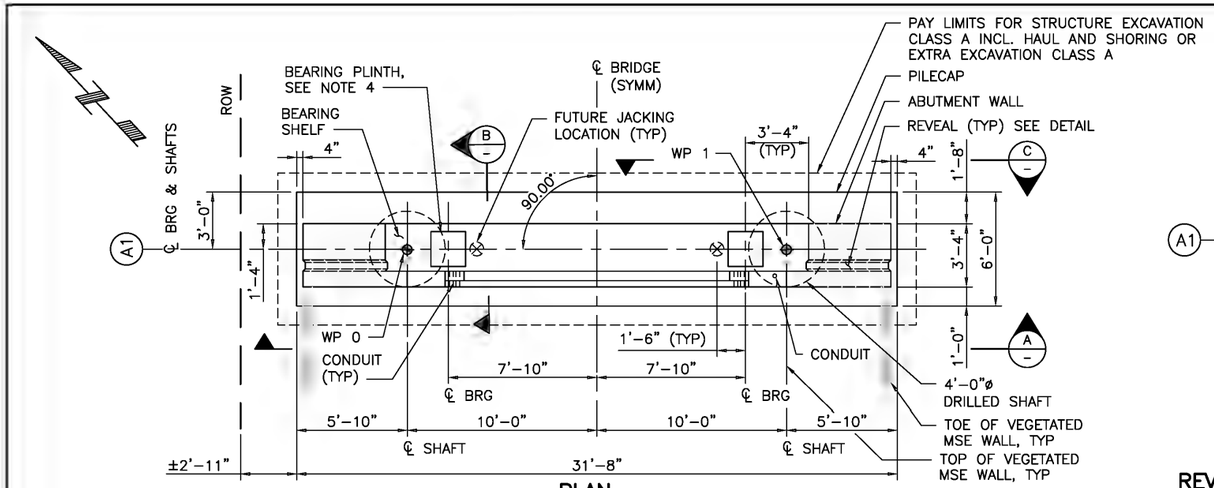

PLAN

SCALE: ¼" = 1'-0"

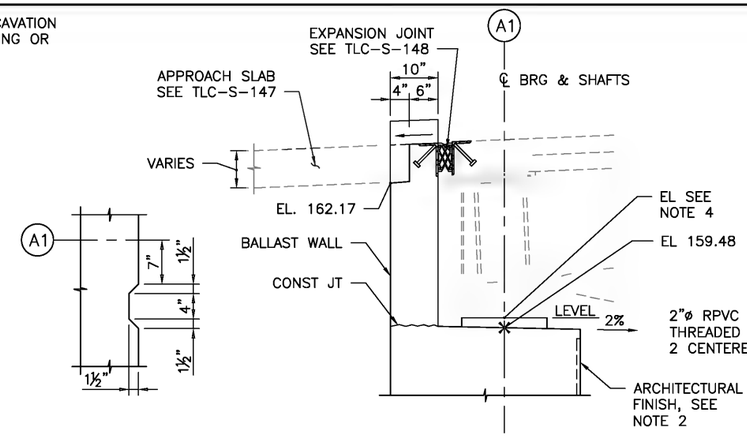

REVEAL DETAIL 1

SCALE: 1" = 1'-0"

DETAIL 2

SCALE: ¾" = 1'-0"

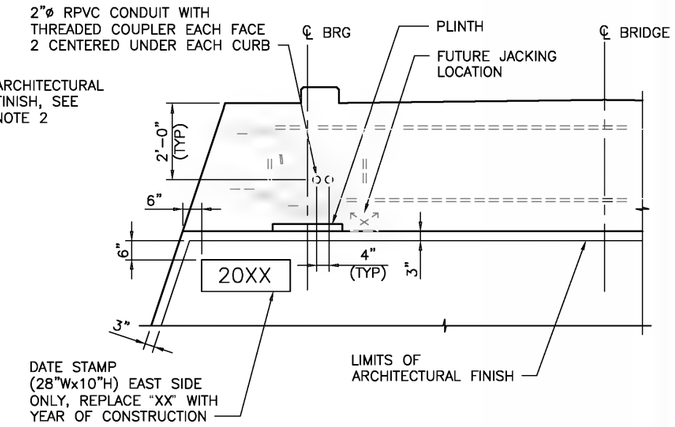

SECTION C

SCALE: ½" = 1'-0"

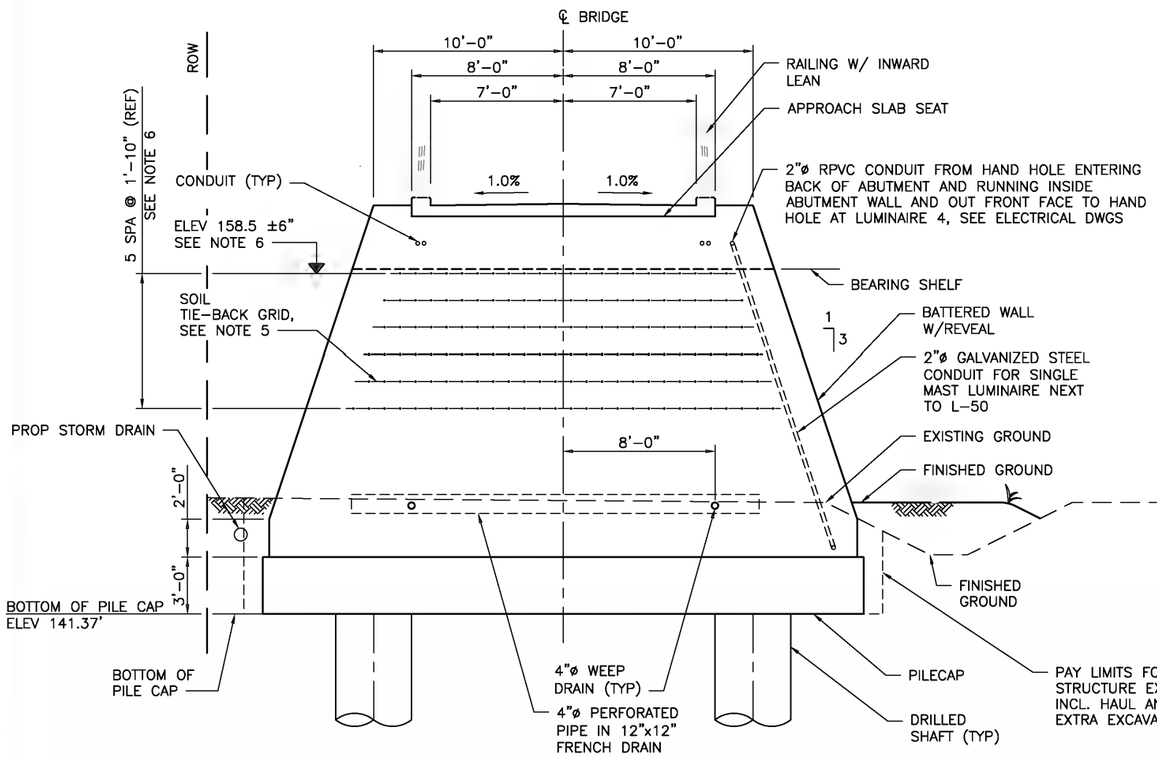

SECTION A

SCALE: ¼" = 1'-0"

(VEGETATED MSE WALL NOT SHOWN)

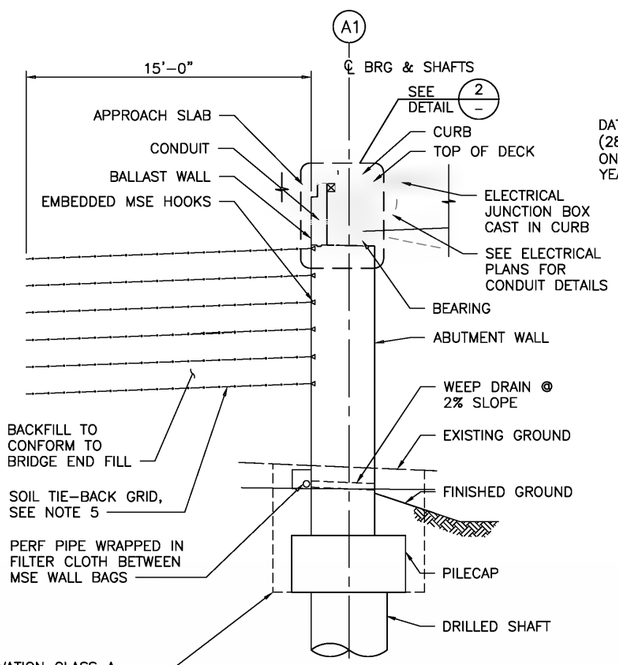

SECTION B

SCALE: ¼" = 1'-0"

NOTES:

1. FOR GENERAL STRUCTURAL NOTES SEE DWG TLC-S-101.
2. ARCHITECTURAL FINISH SHALL BE "RANDOM BOARD" WITH A VERTICAL ORIENTATION. THE FINISH SHALL EXTEND TO 1' MIN BELOW FINISHED GROUND.
3. PIGMENTED SEALER SHALL BE APPLIED TO BATTERED FACES (FULL HEIGHT) AND VERTICAL FACES OF FRONT WALL AND BALLAST WALL.
4. BEARING PLINTHS SHALL BE POURED SEPARATELY FROM THE ABUTMENT. PLINTHS SHALL BE SIZED TO BE 3" WIDER THAN THE BEARING MASONRY PLATE IN EACH DIRECTION, BUT SHALL BE AT LEAST 1" CLEAR OF EDGE OF ABUTMENT. PLINTH HEIGHT SHALL BE ESTABLISHED BASED ON ACTUAL BEARING HEIGHT, BUT SHALL BE 3" MIN TO 6" MAX. CONTRACTOR TO SUBMIT PLINTH DIMENSIONS TO ENGINEER OF RECORD FOR REVIEW PRIOR TO SETTING REBAR CAGE AND POURING PIER.
5. TIEBACK STEEL GRID COMPRISED OF COLD DRAWN WIRE CONFORMING TO ASTM A-82 AND WELDED IN ACCORDANCE WITH ASTM A-185 AND GALVANIZED PER ASTM A-123 WITH GALVANIZED CAST STEEL INSERTS:
   - LONGITUDINAL WIRE, W12.2 @ 6"
   - TRANSVERSE WIRE, W9.5 @ 6"
6. STEEL GRID FOR ABUTMENT SHALL BE COORDINATED W/ MSE WALL GEOGRID REINFORCEMENT SUCH THAT IT IS CENTERED BETWEEN ADJACENT GEOGRID LAYERS, MIN 18"/MAX 24" OC. THE FIRST LAYER SHALL BE SITUATED BELOW THE BEARING SHELF ELEVATION.
7. SEE NOTE 10 ON DWG TLC-S-145 REGARDING ELECTRICAL GROUNDING OF STRUCTURE.

CITY OF KIRKLAND
DEPARTMENT OF PUBLIC WORKS
123 FIFTH AVENUE KIRKLAND, WA 98033
(425) 587-3800 www.kirklandwa.gov

NO.	DATE	BY	APPR.	REVISION
0	2019/12/06	CHJS	MWBM	ISSUE FOR BID

COWI

APPROVED BY:

DATE:

SCVA 2019/12/06 DESIGNED BY DATE
CHJS 2019/12/06 DRAWN BY DATE
MWBM 2019/12/06 CHECKED BY DATE

CITY OF KIRKLAND
TOTEM LAKE CONNECTION

SOUTH ABUTMENT OUTLINE

SHEET: TLC-S-120
SCALE: AS SHOWN
FILENAME: A088367-S-120.dwg

File: J:\Projects\Kirk\A088367-Totem Lake Connection\Drawings\Structural\Bridge\Plans\TLC-S-120.dwg Save Date: Nov 2019 1:21 PM Saved By: CHJS

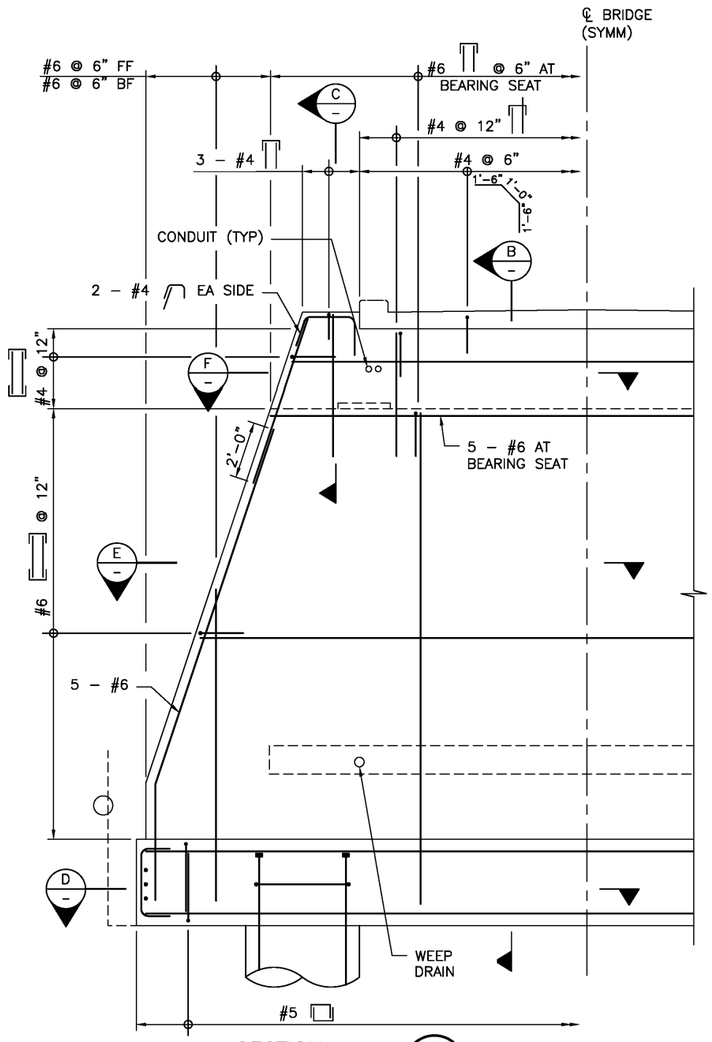

SECTION A 120
SCALE: ⅜" = 1'–0"
(MSE HOOKS NOT SHOWN FOR CLARITY)

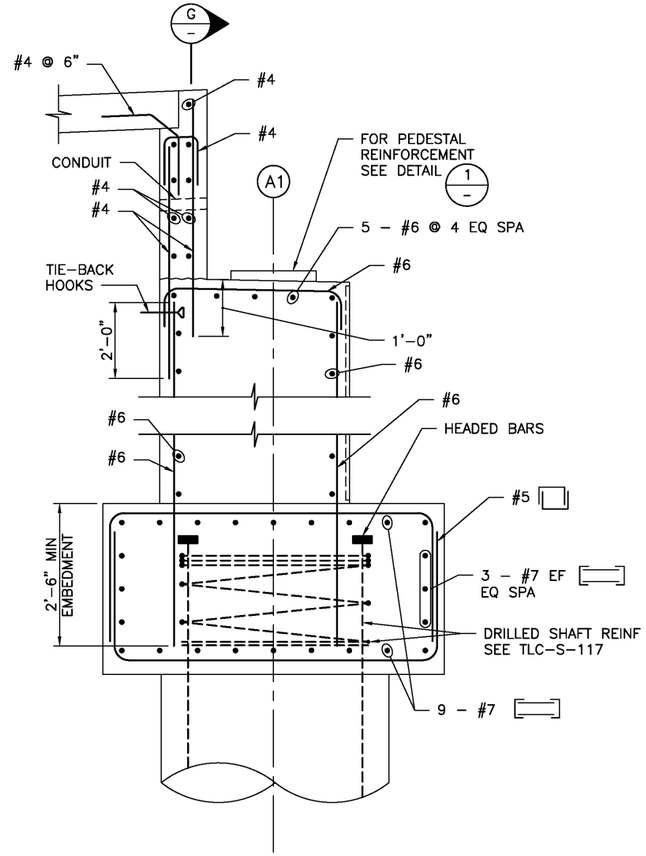

SECTION B
SCALE: ¾" = 1'–0"

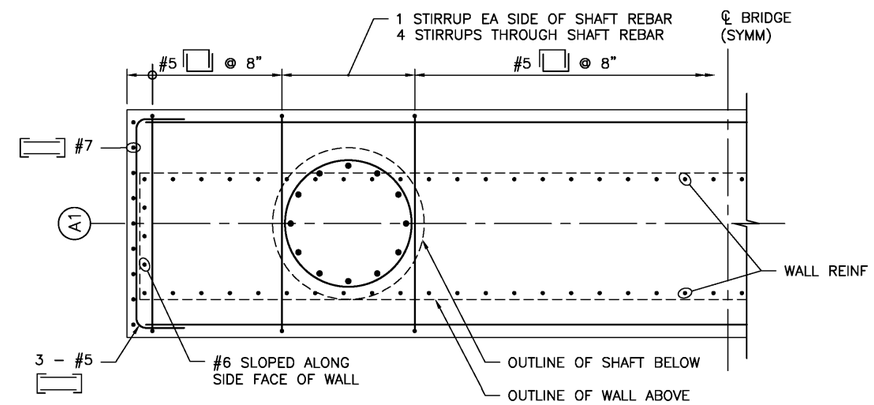

SECTION D
SCALE: ½" = 1'–0"

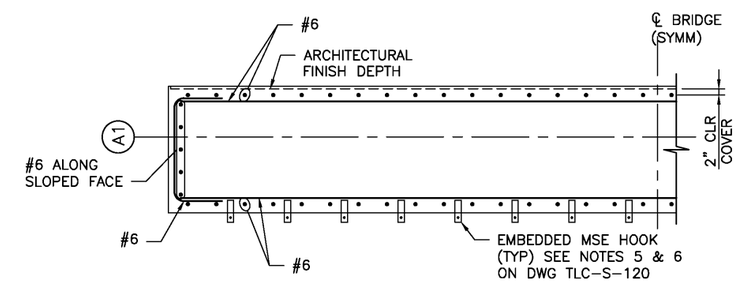

SECTION E
SCALE: ½" = 1'–0"

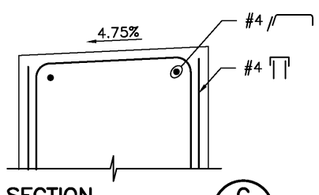

SECTION C
SCALE: ¾" = 1'–0"

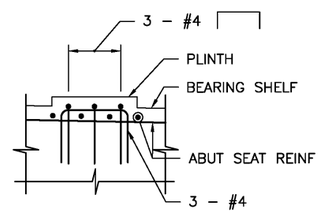

DETAIL 1
SCALE: ¾" = 1'–0"

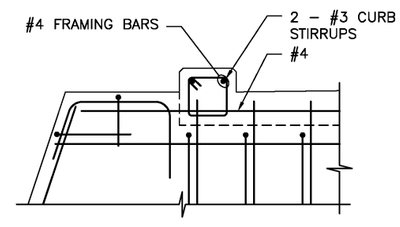

SECTION G
SCALE: ¾" = 1'–0"
(SEE SECTION A FOR BAR CALLOUTS NOT SHOWN)

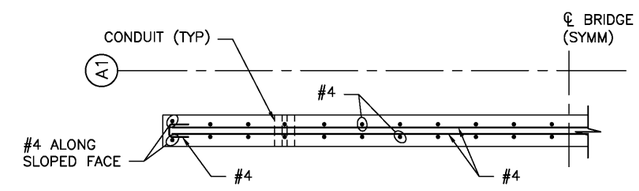

SECTION F
SCALE: ½" = 1'–0"

NOTES:

1. FOR GENERAL STRUCTURAL NOTES SEE DWG TLC–S–101.

CITY OF KIRKLAND
DEPARTMENT OF PUBLIC WORKS
123 FIFTH AVENUE KIRKLAND, WA 98033
(425) 587-3800 www.kirklandwa.gov

NO.	DATE	BY	APPR.	REVISION
0	2019/12/06	CHJS	MWBM	ISSUE FOR BID

MATTHEW D. BAUGHMAN — STATE OF WASHINGTON — STRUCTURAL ENGINEER — PROFESSIONAL ENGINEER

COWI

APPROVED BY:

DATE:

SCVA DESIGNED BY: 2019/12/06 DATE
CHJS DRAWN BY: 2019/12/06 DATE
MWBM CHECKED BY: 2019/12/06 DATE

CITY OF KIRKLAND
TOTEM LAKE CONNECTION

SOUTH ABUTMENT REINFORCEMENT

SHEET: TLC–S–121
SCALE: AS SHOWN
FILENAME: A088367–S–121.dwg

File: D:\Projectwise\COW\d0301252\A088367-S-121.dwg Save Date: Nov 26, 2019 1:22 PM Saved By: CHJS

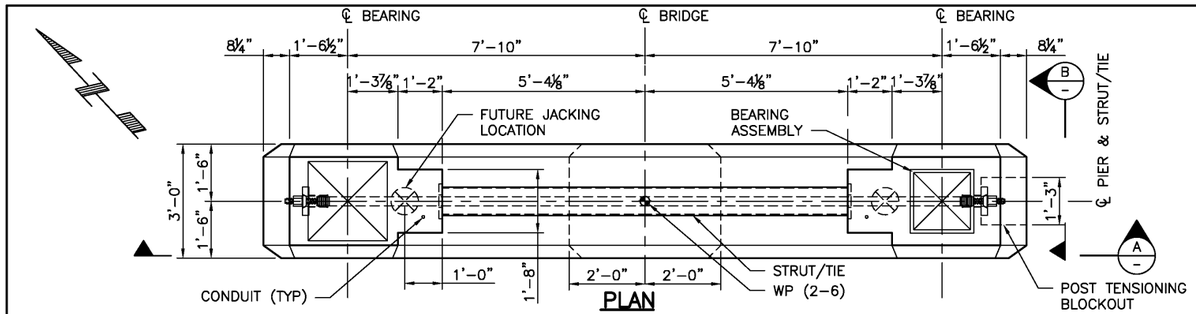

PLAN

SCALE: ½" = 1'-0"

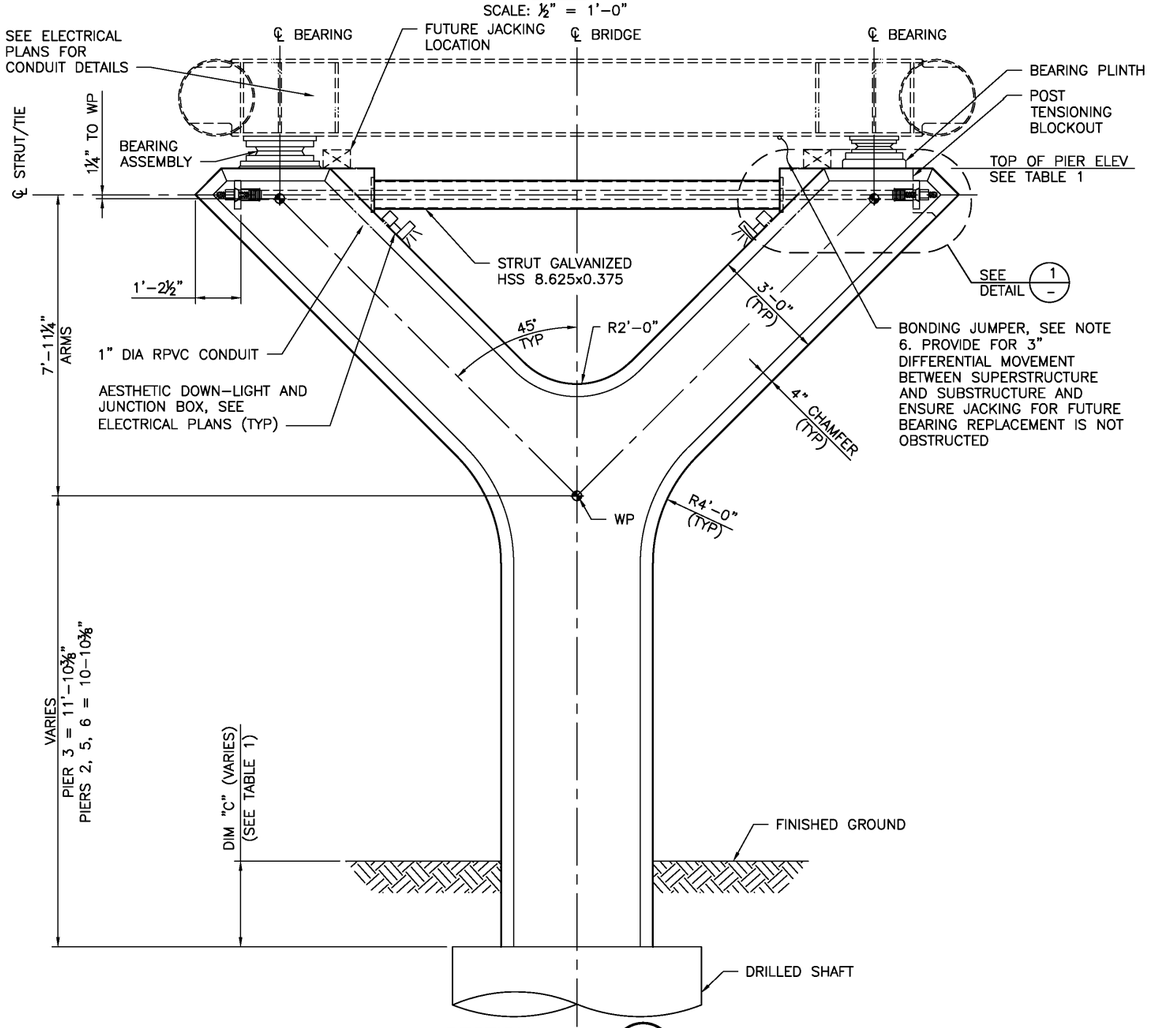

SECTION A

SCALE: ½" = 1'-0"

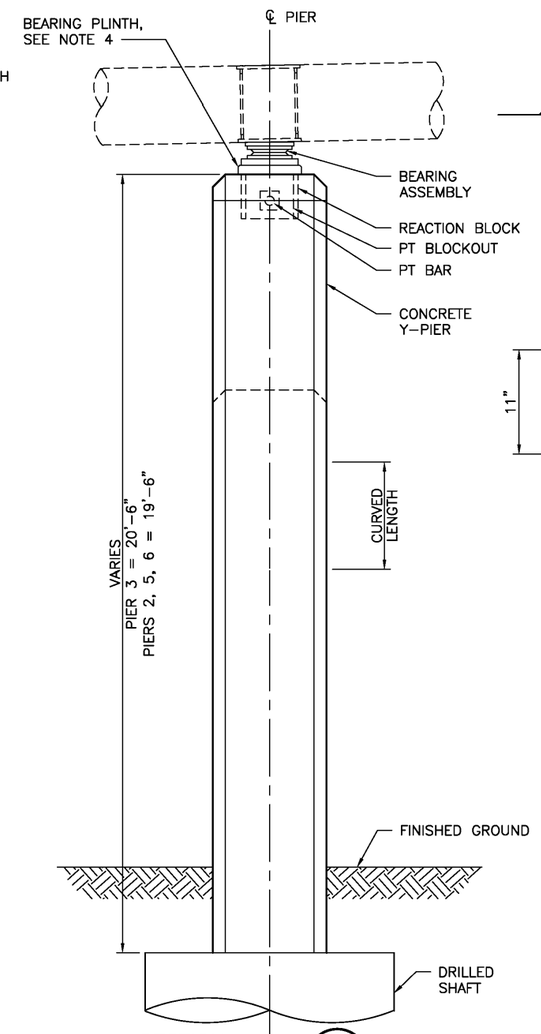

SECTION B

SCALE: ½" = 1'-0"

(P5 SHOWN WITHOUT ARCHES FOR CLARITY)

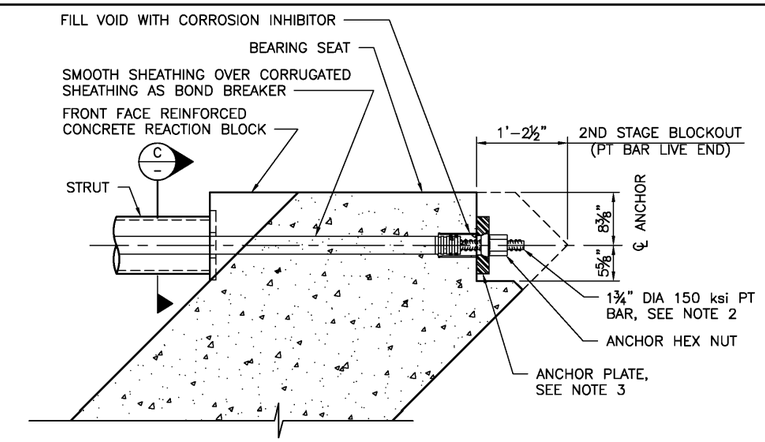

DETAIL 1

SCALE: 1" = 1'-0"
(EAST SIDE ONLY)

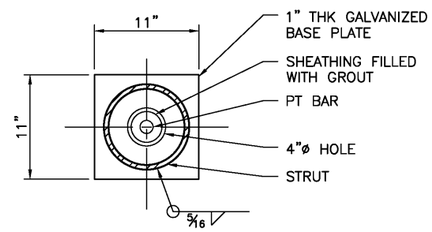

SECTION C

SCALE: 1½" = 1'-0"

TLC-S-122 TABLE 1: PIER DETAILS		
PIER	* DIM "C"	TOP OF PIER ELEV
P2	2.5'	162.36
P3	2.6'	163.57
P5	2.0'	159.07
P6	1.8'	156.11

* DIM "C" IS APPROXIMATE AND MEASURED AT ℄ PIER / ℄ BRIDGE.

NOTES:

1. FOR GENERAL STRUCTURAL NOTES SEE DWG TLC-S-101.
2. STRUT/TIE CONSISTS OF PT BAR WITHIN SHEATHING AND HOLLOW PIPE STRUT BETWEEN ARMS OF Y-PIER. PT BAR SHALL BE POST TENSIONED FROM LIVE END PRIOR TO RELEASE OF PIER FORMWORK IN ACCORDANCE WITH THE FOLLOWING POST TENSIONING SEQUENCE:
   a. PLACE CIP CONCRETE INCLUDING PIPE STRUT.
   b. AT 7 DAYS, STRIP FORMS, LEAVING THE Y-PIER ARMS SUPPORTED.
   c. POST TENSION THE THREAD BAR USING HYDRAULIC JACK TO 110 KIPS AND TIGHTEN ANCHOR NUT USING HAND TOOLS.
   d. RELEASE JACK.
   e. FINISH STRIPPING FORMS.
   f. GROUT ANNULUS AROUND PT BAR.
   g. POURBACK BLOCKOUT.
3. PT BAR DEAD END TO BE SECURED PRIOR TO CONCRETE PLACEMENT AND SHALL INCLUDE NUTS ON BOTH SIDES OF ANCHOR PLATE.
4. PIGMENTED SEALER SHALL BE APPLIED TO ALL FACES BELOW BEARING SEAT.
5. BEARING PLINTHS SHALL BE POURED SEPARATELY FROM THE PIER. PLINTHS SHALL BE SIZED TO BE 3" WIDER THAN THE BEARING MASONRY PLATE IN EACH DIRECTION, BUT SHALL BE AT LEAST 1" CLEAR OF EDGE OF PIER. PLINTH HEIGHT SHALL BE ESTABLISHED BASED ON ACTUAL BEARING HEIGHT, BUT SHALL BE 3" MIN TO 6" MAX. CONTRACTOR TO SUBMIT PLINTH DIMENSIONS TO ENGINEER OF RECORD FOR REVIEW PRIOR TO SETTING REBAR CAGE AND POURING PIER.
6. SEE NOTE 10 ON DWG TLC-S-145 REGARDING ELECTRICAL GROUNDING OF STRUCTURE.

CITY OF KIRKLAND
DEPARTMENT OF PUBLIC WORKS
123 FIFTH AVENUE KIRKLAND, WA 98033
(425) 587-3800 www.kirklandwa.gov

NO.	DATE	BY	APPR.	REVISION
0	2019/12/06	CHJS	MWBM	ISSUE FOR BID

MATTHEW D. BAUGHMAN — STATE OF WASHINGTON — STRUCTURAL ENGINEER — PROFESSIONAL ENGINEER

COWI

APPROVED BY:

DATE:

SCVA 2019/12/06 DESIGNED BY: DATE
CHJS 2019/12/06 DRAWN BY: DATE
MWBM 2019/12/06 CHECKED BY: DATE

CITY OF KIRKLAND
TOTEM LAKE CONNECTION

CONCRETE Y-PIER OUTLINE P2, P3, P5 & P6

SHEET: TLC-S-122
SCALE: AS SHOWN
FILENAME: A088367-S-122.dwg

File: D:\Projectwise\COWI\d0301252\A088367-S-122.dwg Save Date: Nov 26, 2019 1:21 PM Saved By: CHJS

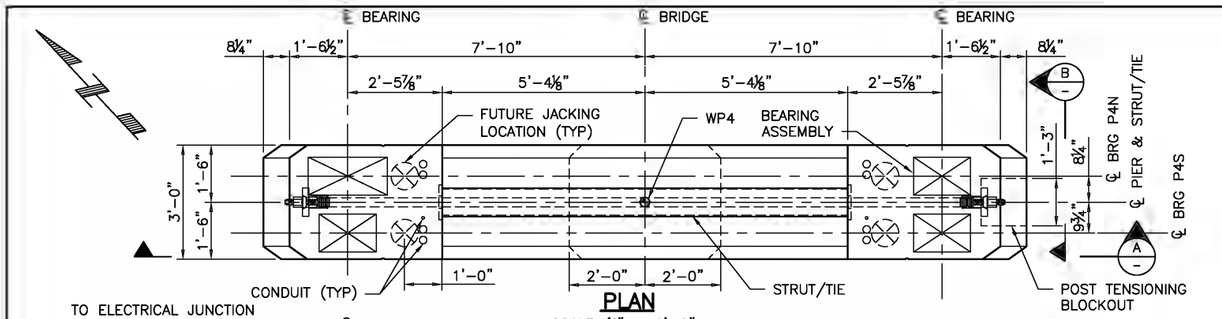

PLAN

SCALE: ½" = 1'-0"

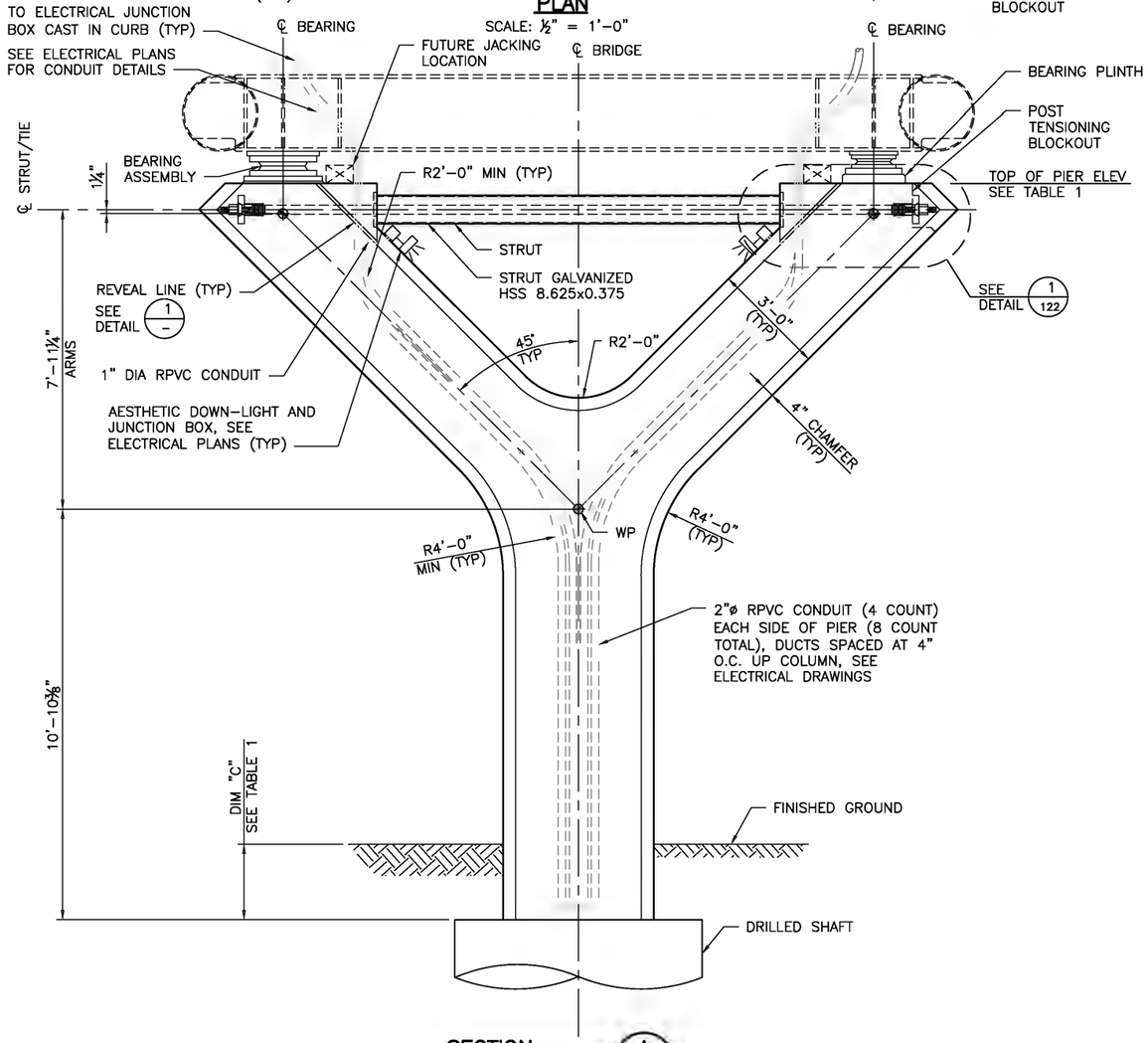

SECTION A

SCALE: ½" = 1'-0"

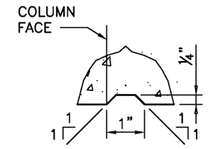

DETAIL 1/–

SCALE: 6" = 1'-0"

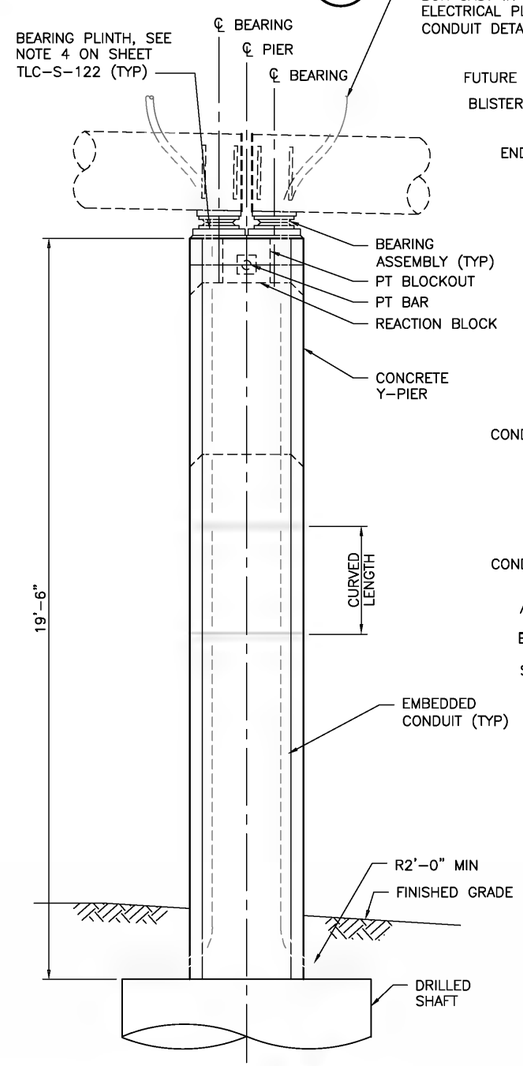

SECTION B

SCALE: ½" = 1'-0"

(SHOWN WITHOUT ARCHES FOR CLARITY)

TLC-S-123 TABLE 1: PIER DETAILS		
PIER	* DIM "C"	TOP OF PIER ELEV
P4	1.8'	162.79

* DIM "C" IS APPROXIMATE AND MEASURED AT ℄ PIER / ℄ BRIDGE.

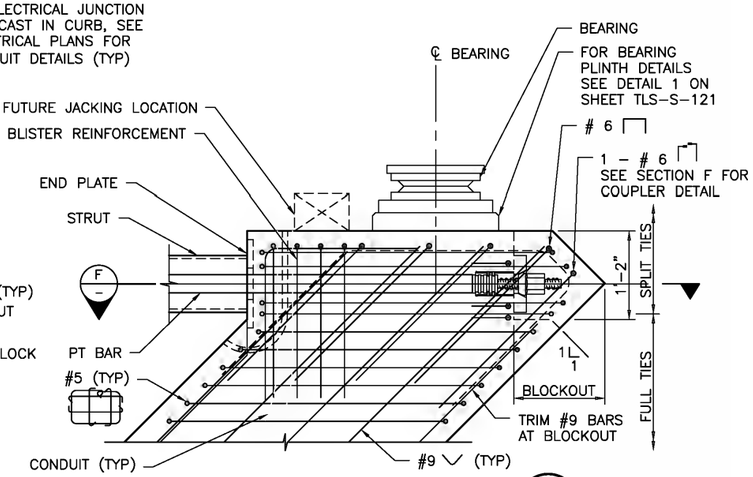

DETAIL 2/124

SCALE: 1" = 1'-0"
(PIER 4 ONLY)

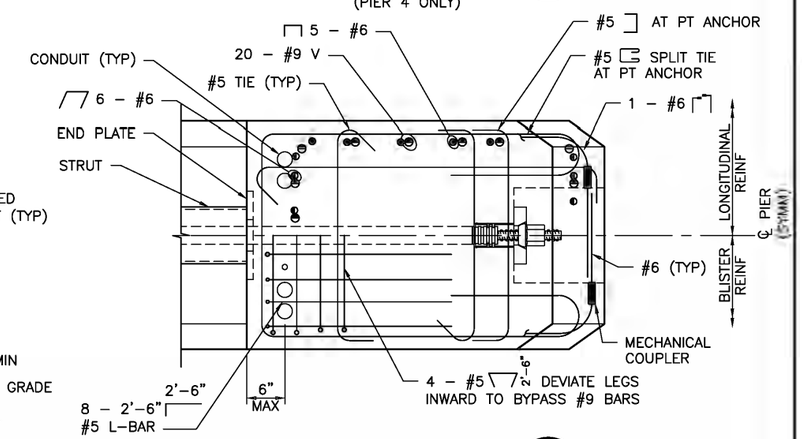

SECTION F/–

SCALE: 1" = 1'-0"
(PIER 4 ONLY)

NOTES:

1. FOR GENERAL STRUCTURAL NOTES SEE DWG TLC-S-101.
2. FOR NOTES AND DETAILS NOT SHOWN, SEE SHEET TLC-S-122.

CITY OF KIRKLAND
DEPARTMENT OF PUBLIC WORKS
123 FIFTH AVENUE KIRKLAND, WA 98033
(425) 587-3800 www.kirklandwa.gov

NO.	DATE	BY	APPR.	REVISION
0	2019/12/06	CHJS	MWBM	ISSUE FOR BID

MATTHEW D. BAUGHMAN — STATE OF WASHINGTON — STRUCTURAL ENGINEER — PROFESSIONAL ENGINEER

COWI

APPROVED BY:

DATE:

SCVA	DESIGNED BY:	2019/12/06 DATE
CHJS	DRAWN BY:	2019/12/06 DATE
MWBM	CHECKED BY:	2019/12/06 DATE

CITY OF KIRKLAND
TOTEM LAKE CONNECTION

CONCRETE Y-PIER OUTLINE P4

SHEET: TLC-S-123
SCALE: AS SHOWN
FILENAME: A088367-S-123.dwg

File: X:\Projects\CIP\11\A03012522\A088367-S-123.dwg Save Date: Nov 30, 2019 1:22 PM Saved By: CHJS

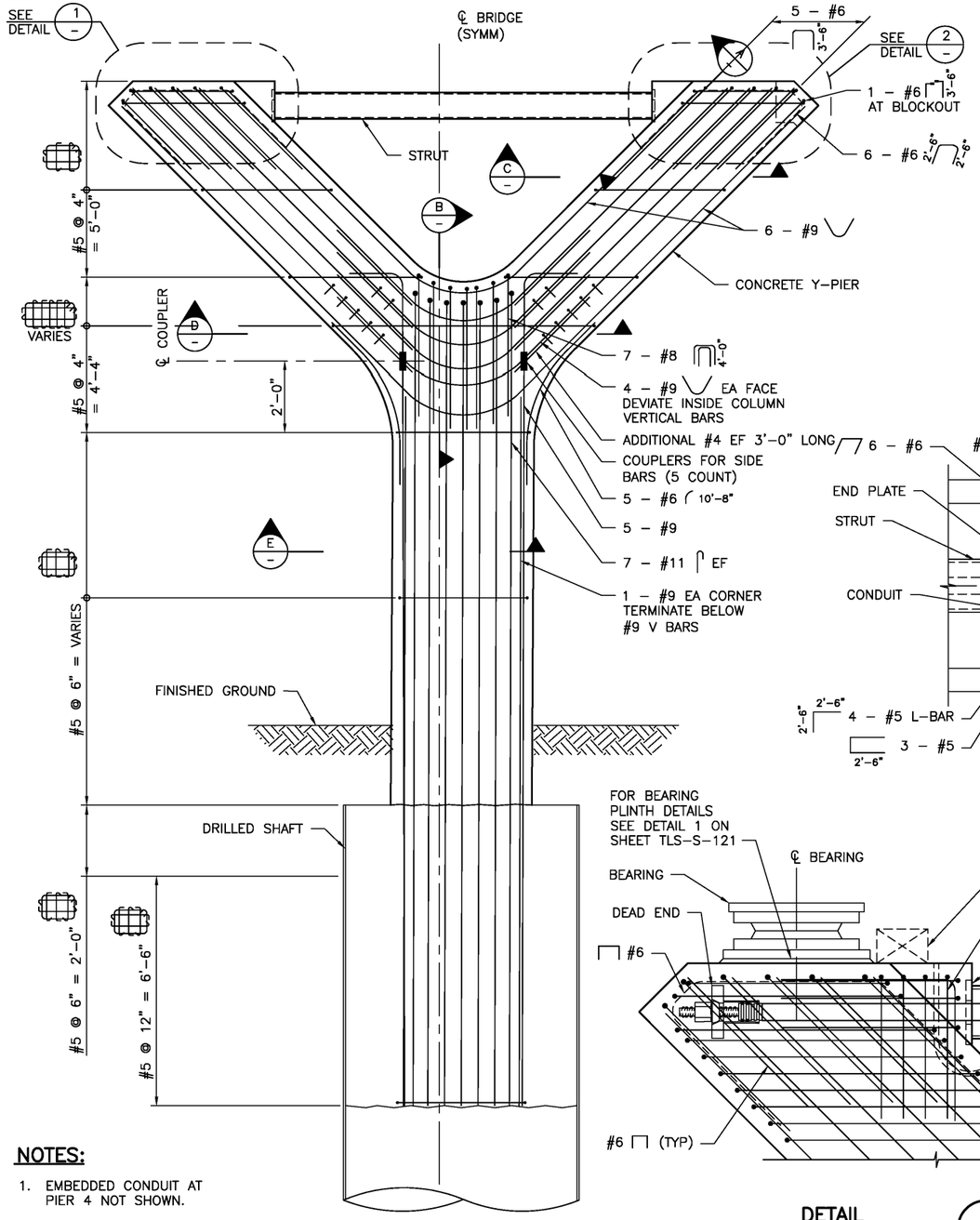

TYPICAL Y–PIER REINFORCEMENT

SCALE: ½" = 1'-0"

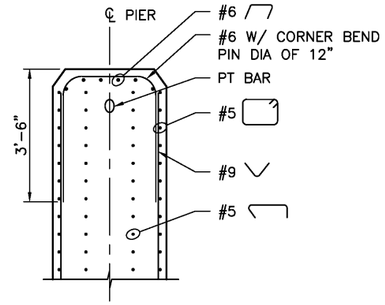

SECTION A

SCALE: ½" = 1'-0"

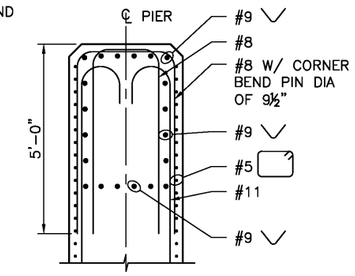

SECTION B

SCALE: ½" = 1'-0"

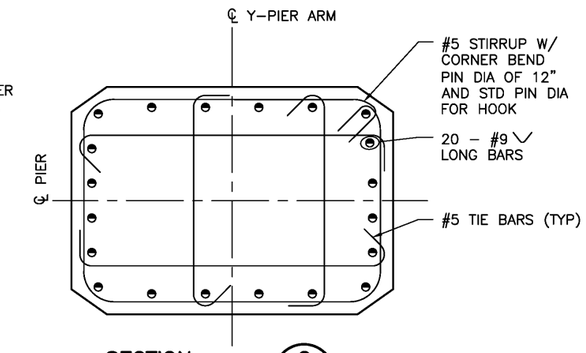

SECTION C

SCALE: 1" = 1'-0"

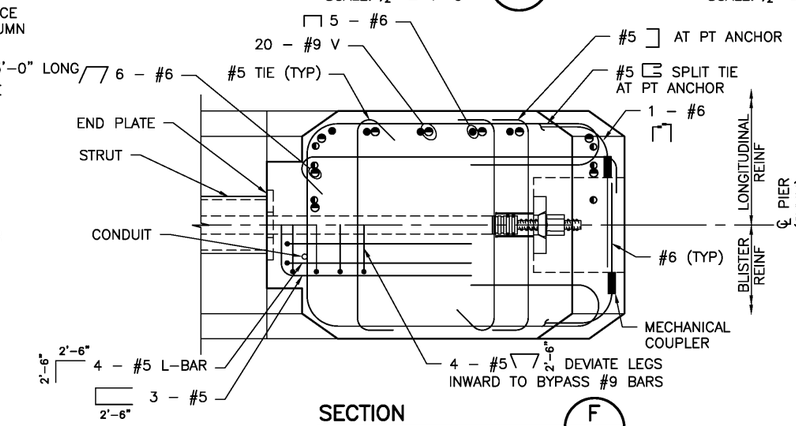

SECTION F

SCALE: 1" = 1'-0"
(SEE TLC–S–123 FOR PIER 4)

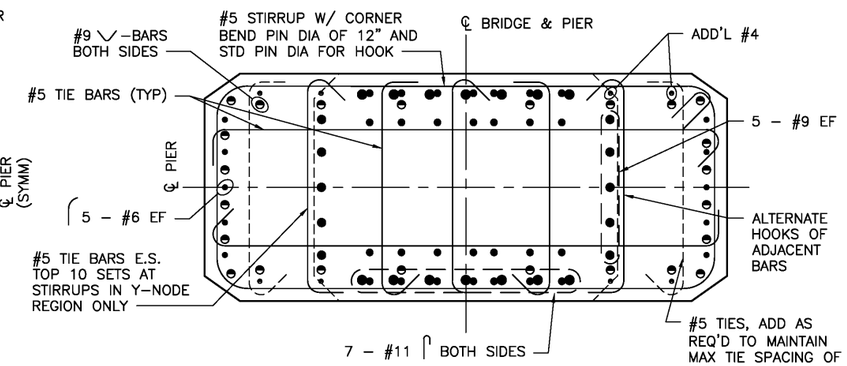

SECTION D

SCALE: 1" = 1'-0"

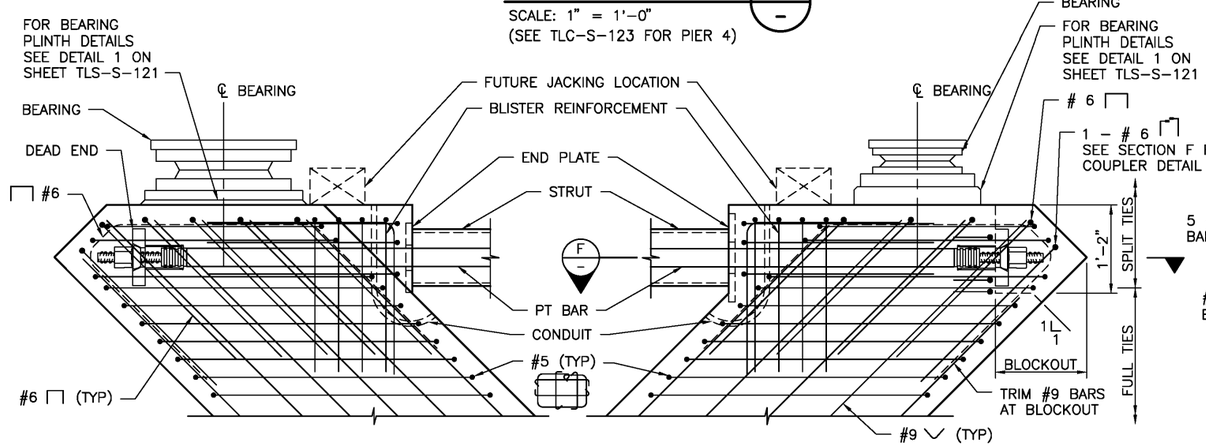

DETAIL 1

SCALE: 1" = 1'-0"

DETAIL 2

SCALE: 1" = 1'-0"

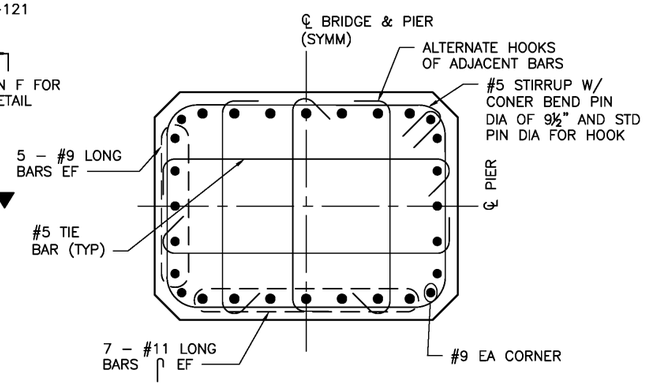

SECTION E

SCALE: 1" = 1'-0"

NOTES:

1. EMBEDDED CONDUIT AT PIER 4 NOT SHOWN.

NOTES:

1. FOR GENERAL NOTES, SEE DWG TLC–S–101.

File: D:\Projectwise\COW\w0301252\A088367-S-124.dwg Save Date: Nov 26, 2019 1:22 PM Saved By: CHJS

CITY OF KIRKLAND
DEPARTMENT OF PUBLIC WORKS
123 FIFTH AVENUE KIRKLAND, WA 98033
(425) 587-3800 www.kirklandwa.gov

NO.	DATE	BY	APPR.	REVISION
0	2019/12/06	CHJS	MWBM	ISSUE FOR BID

MATTHEW D. BAUGHMAN — STATE OF WASHINGTON — STRUCTURAL ENGINEER — PROFESSIONAL ENGINEER

COWI

APPROVED BY:

DATE:

SCVA 2019/12/06
DESIGNED BY: DATE

CHJS 2019/12/06
DRAWN BY: DATE

MWBM 2019/12/06
CHECKED BY: DATE

CITY OF KIRKLAND
TOTEM LAKE CONNECTION

CONCRETE Y–PIER REINFORCEMENT

SHEET: TLC–S–124

SCALE: AS SHOWN

FILENAME: A088367–S–124.dwg

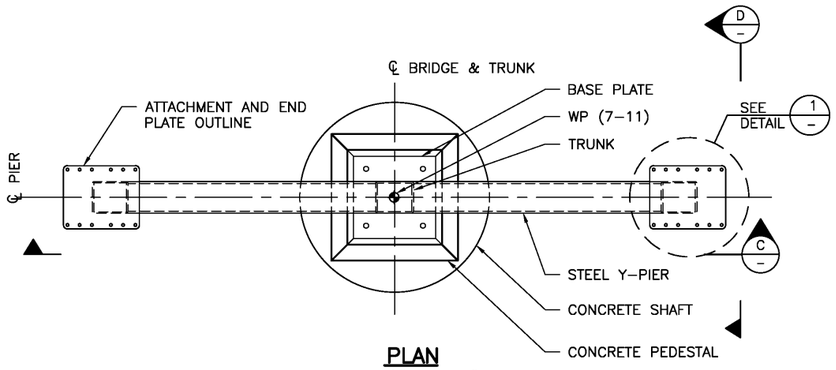

PLAN
SCALE: ½" = 1'–0"

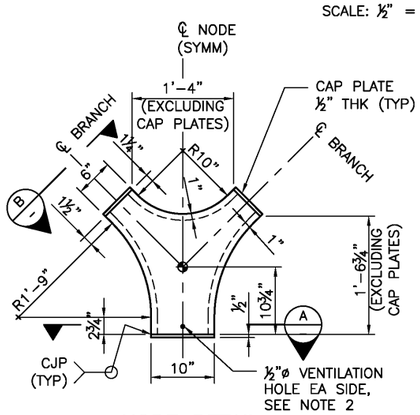

NODE DETAIL
SCALE: 1" = 1'–0"

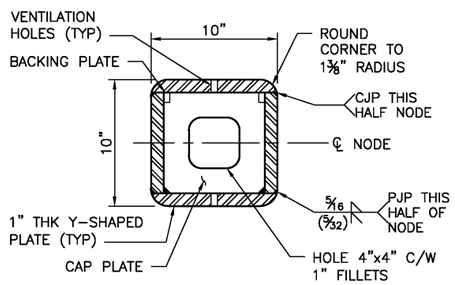

SECTION A
SCALE: 2" = 1'–0"

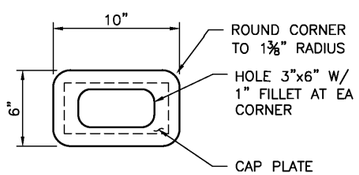

SECTION B
SCALE: 2" = 1'–0"

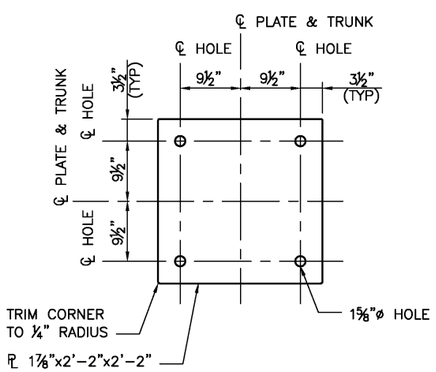

BASE PLATE DETAIL
SCALE: 1" = 1'–0"

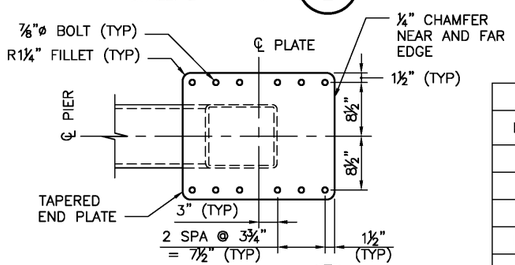

DETAIL 1
SCALE: 1" = 1'–0"

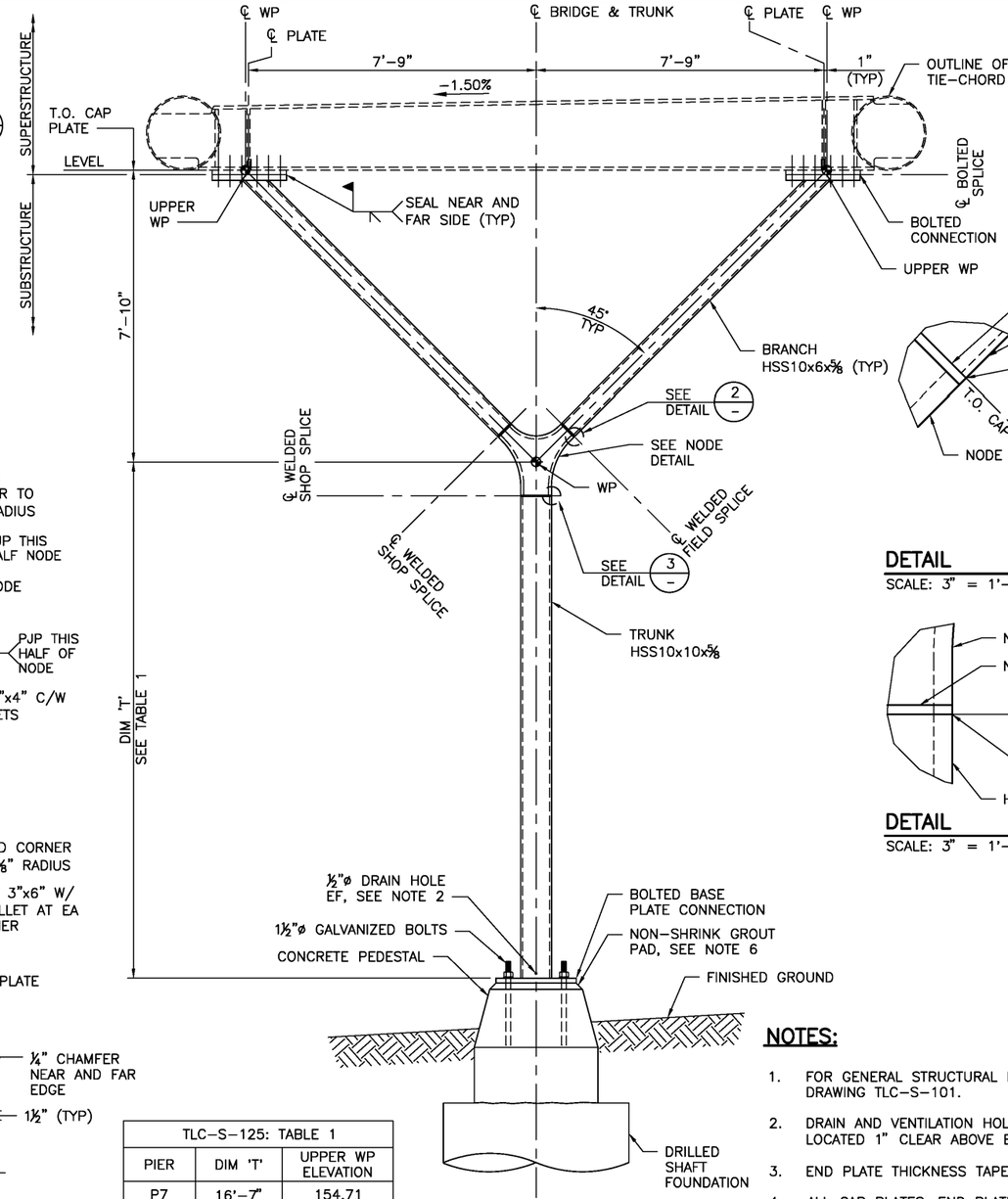

SECTION C
SCALE: ½" = 1'–0"

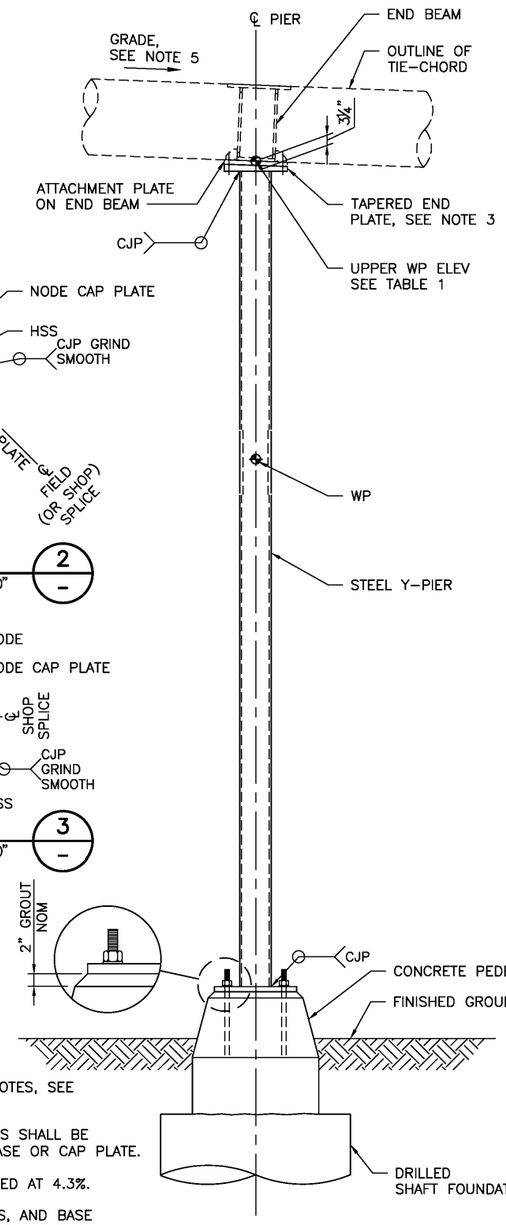

SECTION D
SCALE: ½" = 1'–0"

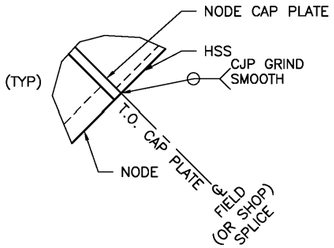

DETAIL 2
SCALE: 3" = 1'–0"

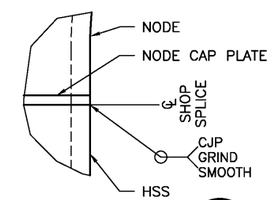

DETAIL 3
SCALE: 3" = 1'–0"

TLC–S–125: TABLE 1		
PIER	DIM 'T'	UPPER WP ELEVATION
P7	16'–7"	154.71
P8	17'–11"	152.49
P9	16'–5"	150.28
P10	13'–8"	148.06
P11	8'–1"	146.21

NOTES:

1. FOR GENERAL STRUCTURAL NOTES, SEE DRAWING TLC–S–101.
2. DRAIN AND VENTILATION HOLES SHALL BE LOCATED 1" CLEAR ABOVE BASE OR CAP PLATE.
3. END PLATE THICKNESS TAPERED AT 4.3%.
4. ALL CAP PLATES, END PLATES, AND BASE PLATES SHALL HAVE THROUGH THICKNESS PROPERTIES IN ACCORDANCE WITH ASTM A770.
5. GRADE VARIES BETWEEN INNER AND OUTER TIE–CHORDS; END BEAM GRADE FOLLOWS L–10 @ 4.3%.
6. USE LEVELING NUTS UNDER TRUNK BASE PLATE PRIOR TO GROUTING.

CITY OF KIRKLAND
DEPARTMENT OF PUBLIC WORKS
123 FIFTH AVENUE KIRKLAND, WA 98033
(425) 587-3800 www.kirklandwa.gov

NO.	DATE	BY	APPR.	REVISION
0	2019/12/06	CHJS	MWBM	ISSUE FOR BID

MATTHEW D. BAUGHMAN — STATE OF WASHINGTON — STRUCTURAL ENGINEER — PROFESSIONAL ENGINEER

COWI

APPROVED BY:

DATE:

SCVA 2019/12/06 — DESIGNED BY: DATE
CHJS 2019/12/06 — DRAWN BY: DATE
MWBM 2019/12/06 — CHECKED BY: DATE

CITY OF KIRKLAND
TOTEM LAKE CONNECTION

STEEL Y–PIERS

SHEET: TLC–S–125
SCALE: AS SHOWN
FILENAME: A088367–S–125.dwg

File: D:\Projectwise\COWI\d0301252\A088367-S-125.dwg Save Date: Nov 26, 2019 1:21 PM Saved By: CHJS

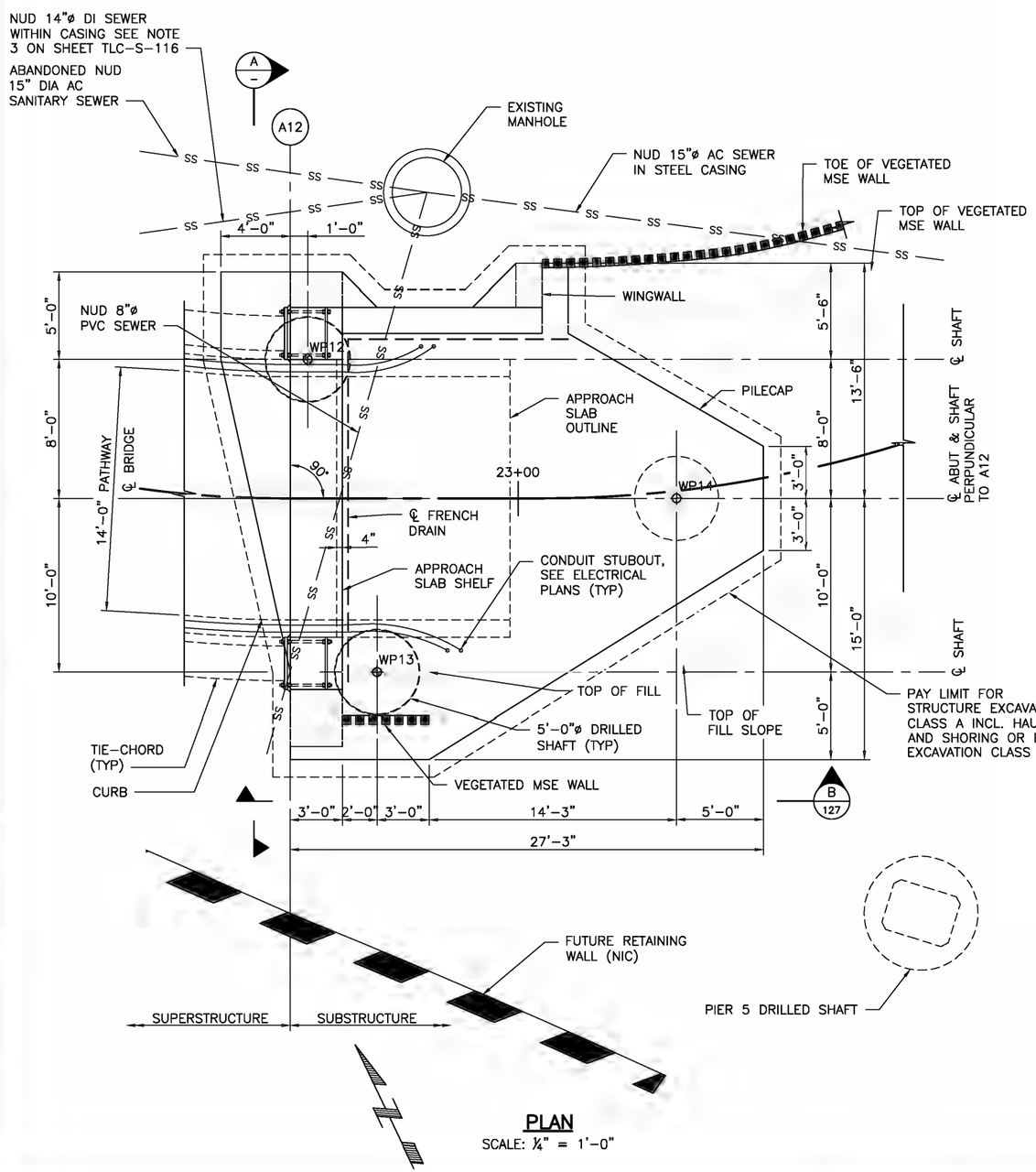

PLAN

SCALE: ¼" = 1'-0"

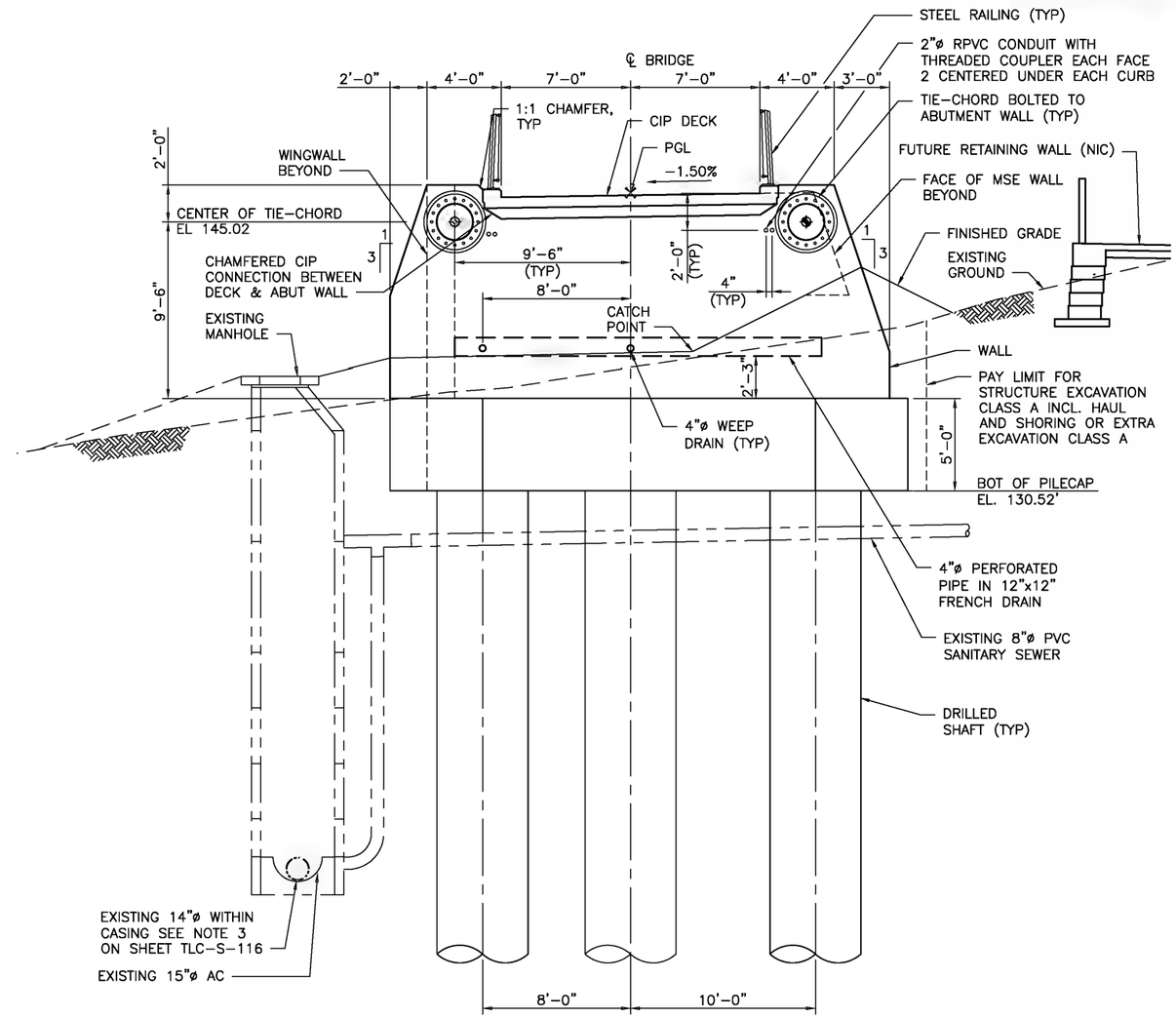

SECTION A

SCALE: ¼" = 1'-0"

NOTES:

1. FOR GENERAL STRUCTURAL NOTES SEE DWG TLC -S-101.
2. NUD = NORTHSHORE UTILITY DISTRICT

CITY OF KIRKLAND
DEPARTMENT OF PUBLIC WORKS
123 FIFTH AVENUE KIRKLAND, WA 98033
(425) 587-3800 www.kirklandwa.gov

NO.	DATE	BY	APPR.	REVISION
0	2019/12/06	CHJS	MWBM	ISSUE FOR BID

MATTHEW D. BACHMAN — STATE OF WASHINGTON — STRUCTURAL ENGINEER — PROFESSIONAL ENGINEER

COWI

APPROVED BY:

DATE:

SCVA DESIGNED BY: 2019/12/06 DATE
CHJS DRAWN BY: 2019/12/06 DATE
MWBM CHECKED BY: 2019/12/06 DATE

CITY OF KIRKLAND
TOTEM LAKE CONNECTION

NORTH ABUTMENT OUTLINE – SHEET 1

SHEET: TLC-S-126
SCALE: AS SHOWN
FILENAME: A088367-S-126.dwg

File: X:\Projects\V2011\A088367-S-137.dwg Save Date: Nov 2, 2019 1:21 PM Saved By: KNBR

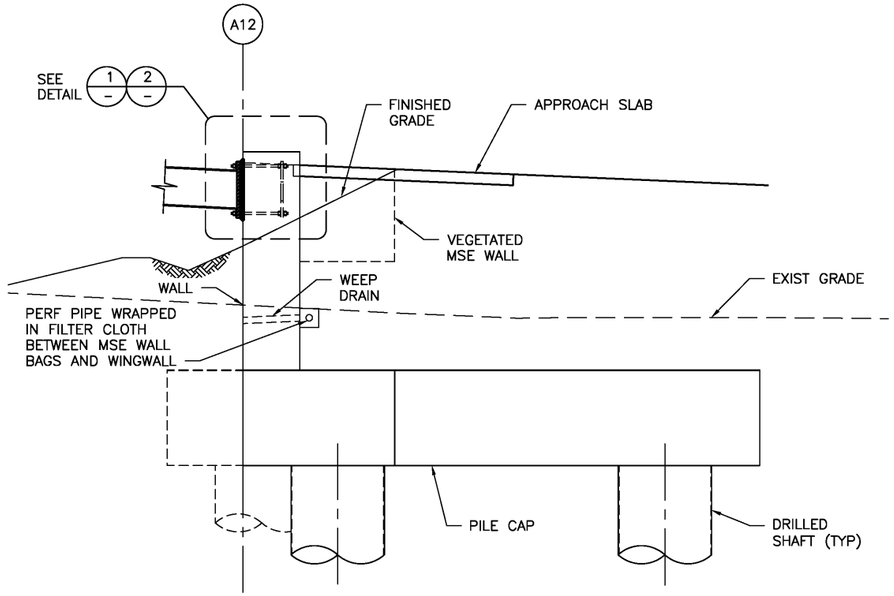

SECTION B / 126
SCALE: ¼" = 1'–0"

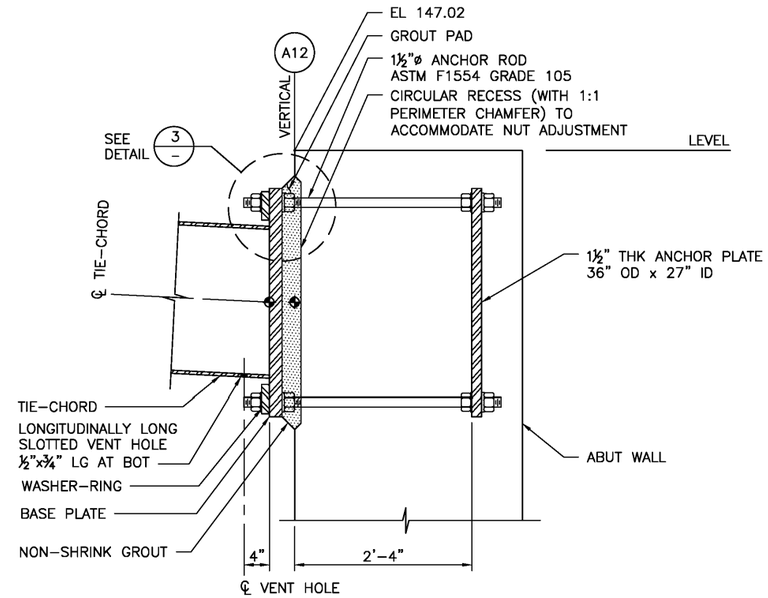

DETAIL 1 / –
SCALE: 1" = 1'–0"
FOR DETAILS OF BASE PLATE AND WASHER RING, SEE DWG S–136

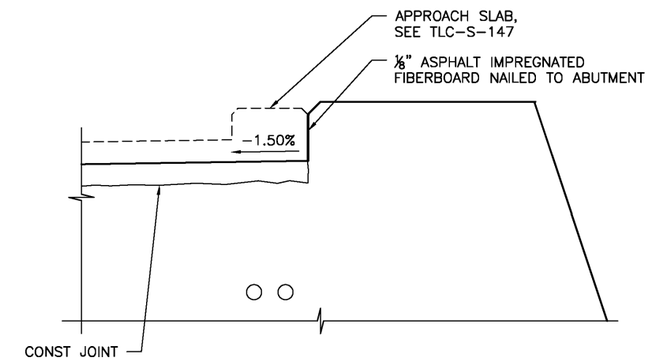

SECTION C / –
SCALE: 1" = 1'–0"

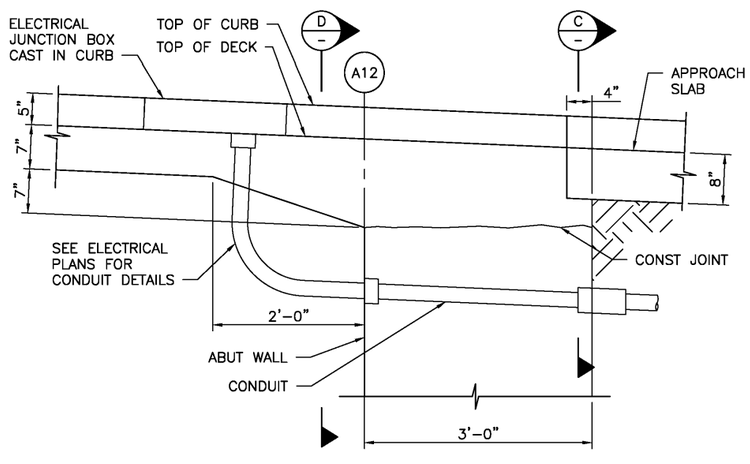

DETAIL 2 / –
SCALE: 1" = 1'–0"

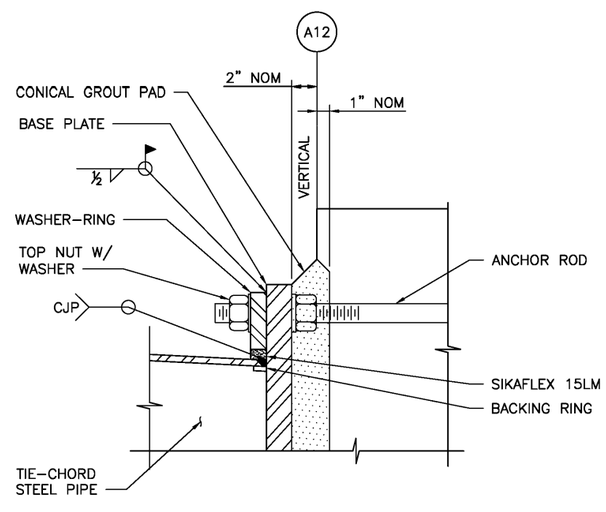

DETAIL 3 / –
SCALE: 2" = 1'–0"

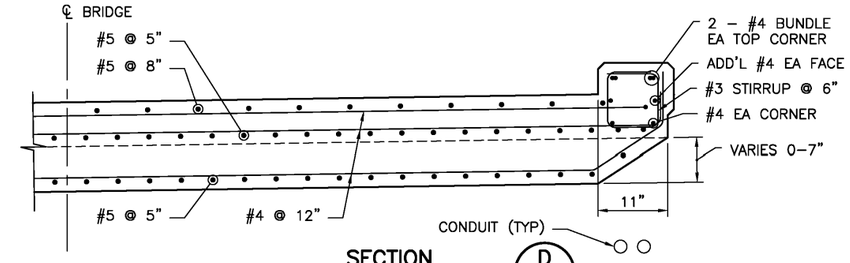

SECTION D / –
SCALE: 1" = 1'–0"

NOTES:

1. FOR GENERAL STRUCTURAL NOTES SEE DWG TLC–S–101.
2. ANCHOR RODS TO BE INSTALLED AS NORMAL TO WALL FACE USING TEMPLATE FROM FABRICATOR OF TIE–CHORD TO ENSURE CORRECT HOLE ORIENTATION.
3. TIE–CHORDS TO BE INSTALLED ON THE ANCHOR RODS WITH TEMP. VERTICAL SUPPORT ON CRIBBING AT ABUTMENT AND OTHER END ON PIER P11. WASHER RING SHALL BE WELDED, PROFILE OF TIE–CHORDS ESTABLISHED, BACK AND FRONT NUTS HAND TIGHTENED, THEN GROUT PAD INSTALLED PRIOR TO PLACING PRECAST PANELS.
4. SEE NOTE 10 ON DWG TLC–S–145 REGARDING ELECTRICAL GROUNDING OF STRUCTURE.

CITY OF KIRKLAND
DEPARTMENT OF PUBLIC WORKS
123 FIFTH AVENUE KIRKLAND, WA 98033
(425) 587-3800 www.kirklandwa.gov

NO.	DATE	BY	APPR.	REVISION
0	2019/12/06	CHJS	MWBM	ISSUE FOR BID

MATTHEW D. BAUGHMAN — STATE OF WASHINGTON — STRUCTURAL ENGINEER — PROFESSIONAL ENGINEER

COWI

APPROVED BY:

DATE:

SCVA DESIGNED BY:	2019/12/06 DATE
CHJS DRAWN BY:	2019/12/06 DATE
MWBM CHECKED BY:	2019/12/06 DATE

CITY OF KIRKLAND
TOTEM LAKE CONNECTION

NORTH ABUTMENT OUTLINE – SHEET 2

SHEET: TLC–S–127
SCALE: AS SHOWN
FILENAME: A088367–S–127.dwg

File: D:\Projectwise\COWI\d0301252\A088367-S-127.dwg Save Date: Nov 06, 2019 11:42 AM Saved By: CHJS

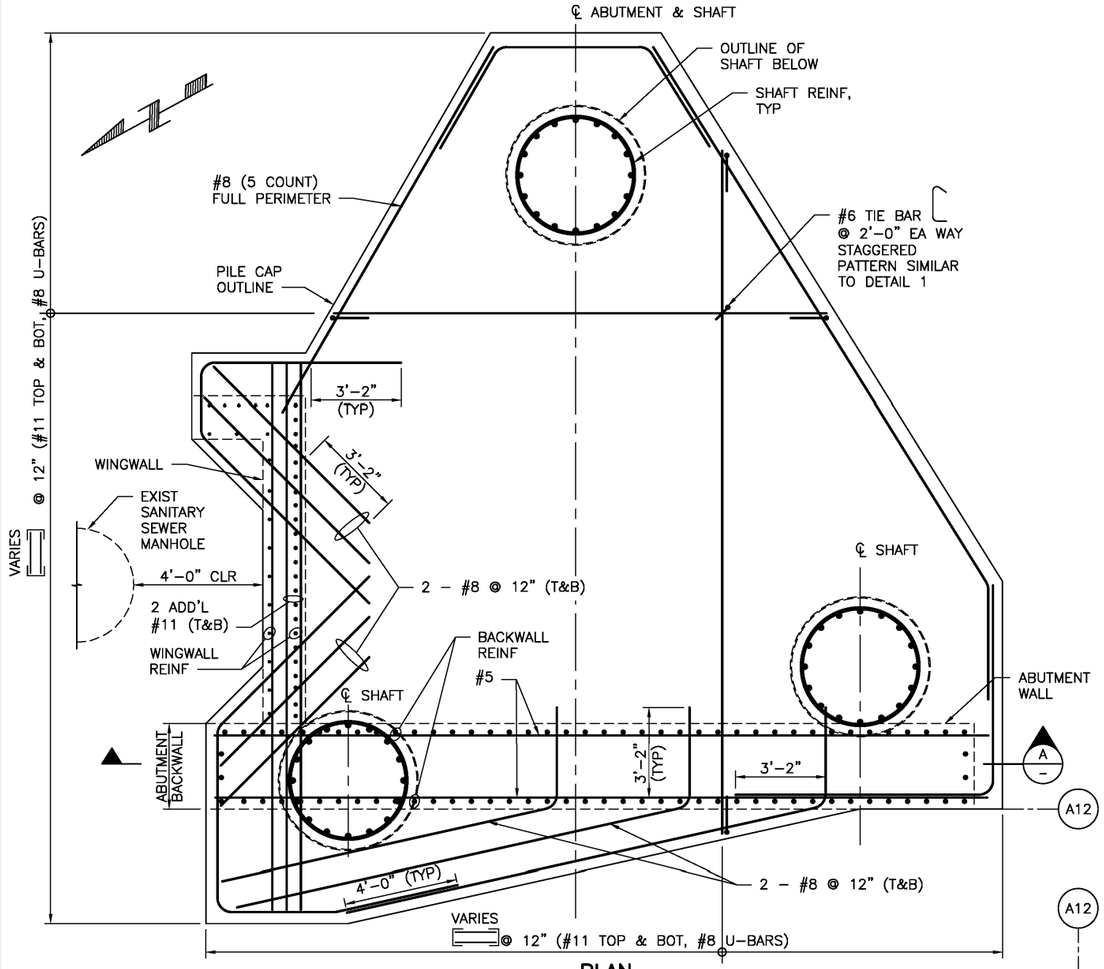

PLAN

SCALE: ⅜" = 1'-0"
(ABUTMENT WALL TIE REINFORCEMENT NOT SHOWN FOR CLARITY)

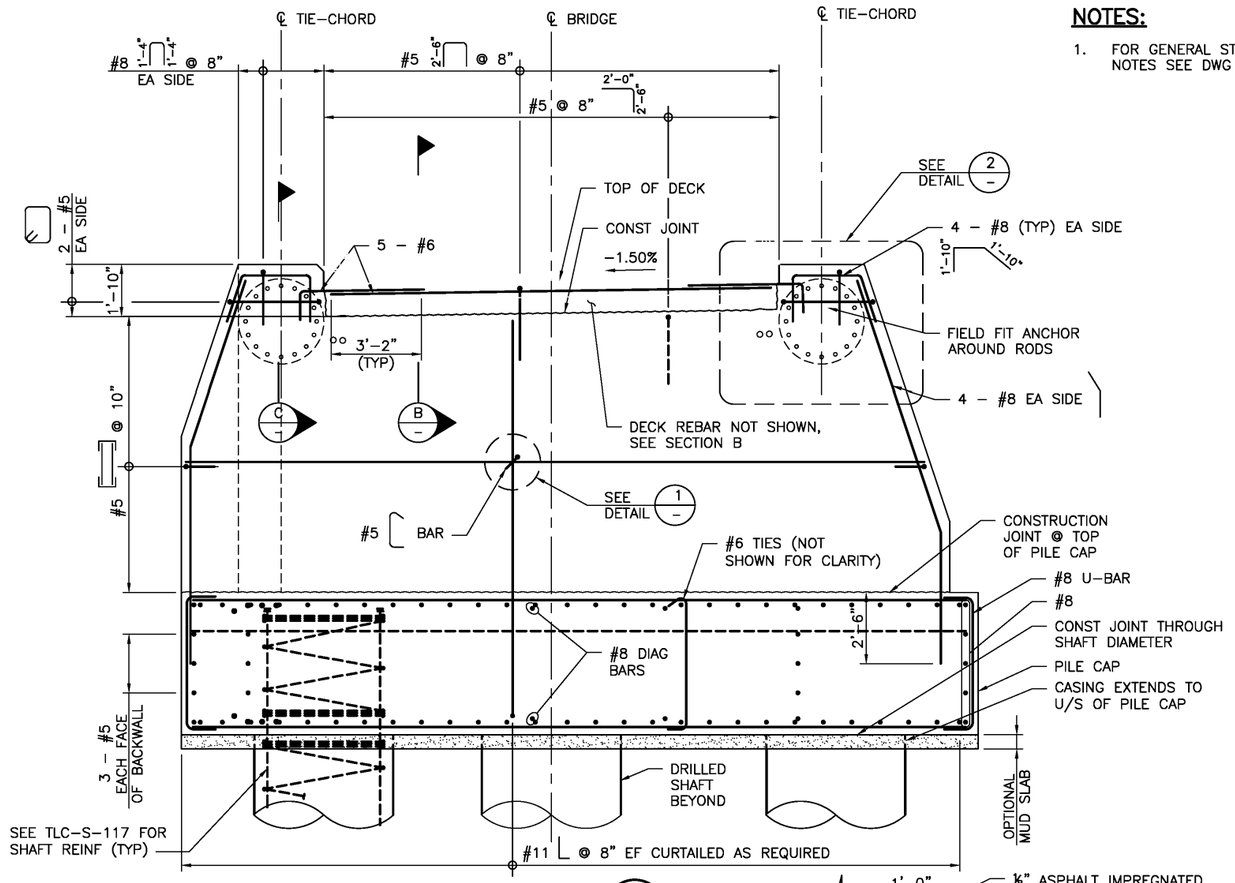

SECTION A

SCALE: ⅜" = 1'-0"

NOTES:

1. FOR GENERAL STRUCTURAL NOTES SEE DWG TLC-S-101.

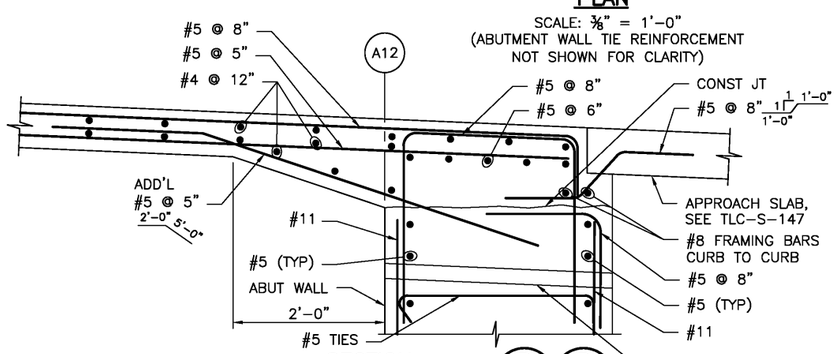

SECTION B / 146

SCALE: 1" = 1'-0"

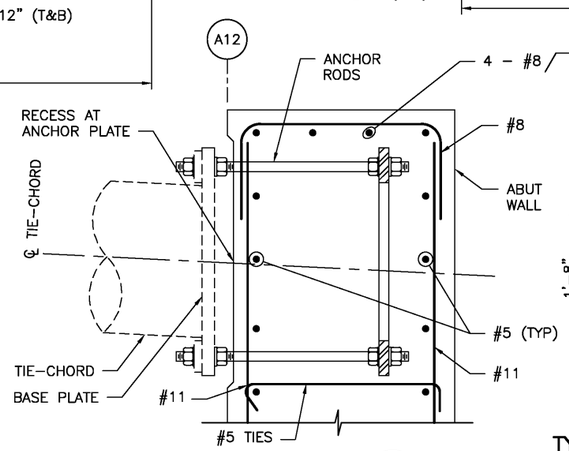

SECTION C

SCALE: 1" = 1'-0"

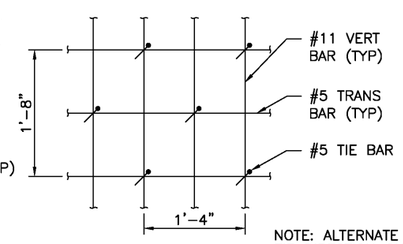

NOTE: ALTERNATE TIE DIRECTION ON EVERY OTHER BAR

TYPICAL TIE BAR WALL SPACING DETAIL 1

SCALE: 1" = 1'-0"

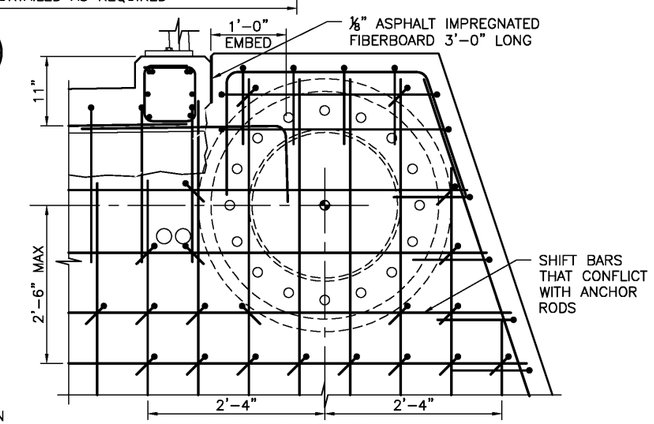

REINFORCEMENT AT TIE-CHORD DETAIL 2

SCALE: 1" = 1'-0"

File: D:\Projectwise\COWI\d0301252\A088367-S-128.dwg Save Date: Oct 31, 2019 10:29 AM Saved By: CHJS

CITY OF KIRKLAND
DEPARTMENT OF PUBLIC WORKS
123 FIFTH AVENUE KIRKLAND, WA 98033
(425) 587-3800 www.kirklandwa.gov

NO.	DATE	BY	APPR.	REVISION
0	2019/12/06	CHJS	MWBM	ISSUE FOR BID

MATTHEW D. BAUGHMAN — STATE OF WASHINGTON — STRUCTURAL ENGINEER — PROFESSIONAL ENGINEER

COWI

APPROVED BY:

DATE:

SCVA 2019/12/06 — DESIGNED BY / DATE
CHJS 2019/12/06 — DRAWN BY / DATE
MWBM 2019/12/06 — CHECKED BY / DATE

CITY OF KIRKLAND
TOTEM LAKE CONNECTION

NORTH ABUTMENT REINFORCEMENT

SHEET: TLC-S-128
SCALE: AS SHOWN
FILENAME: A088367-S-128.dwg

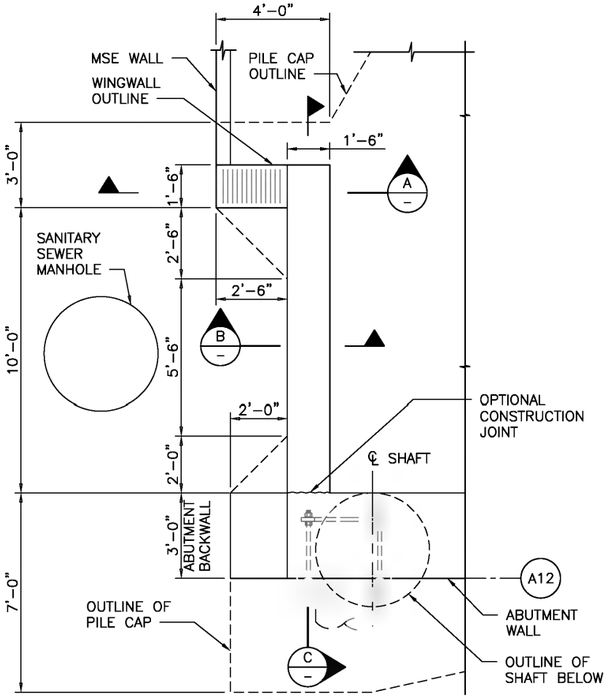

PLAN

SCALE: ⅜" = 1'-0"
(ABUTMENT PILE CAP REINFORCEMENT NOT SHOWN FOR CLARITY)

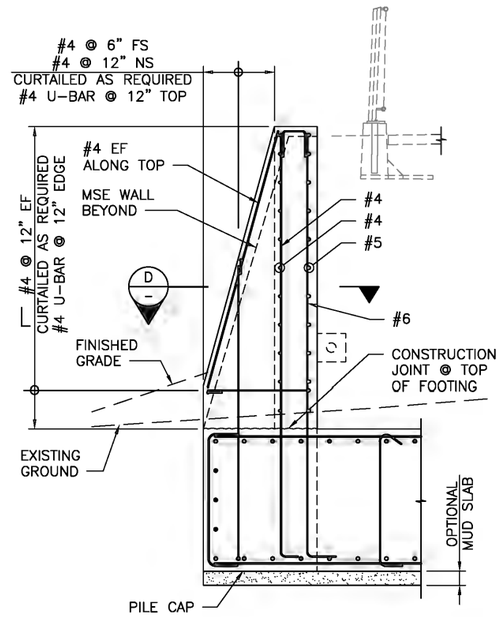

SECTION A

SCALE: ⅜" = 1'-0"

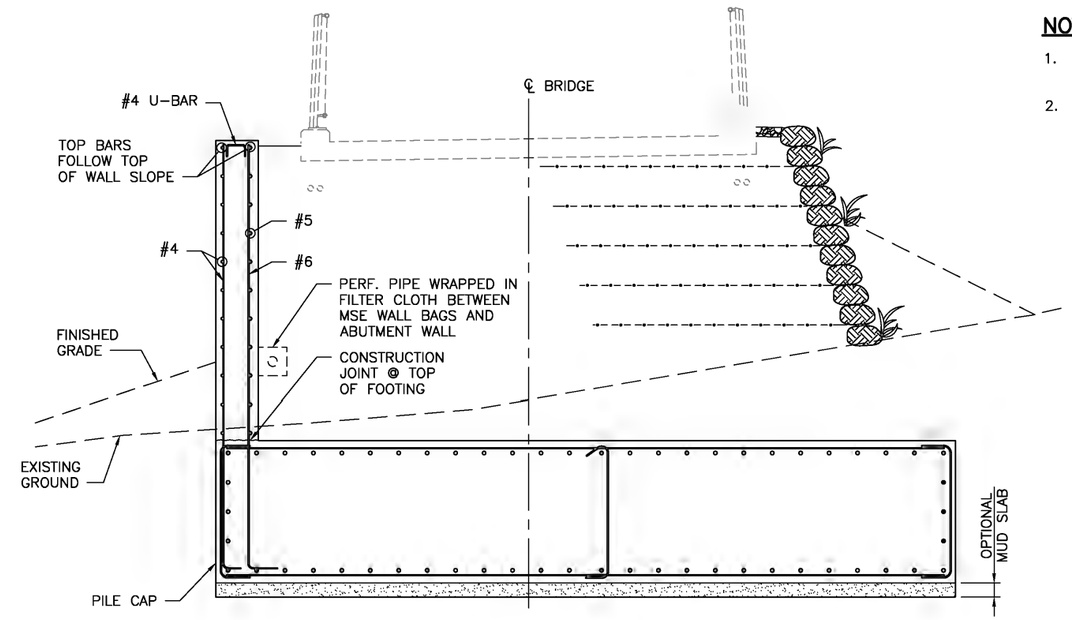

SECTION B

SCALE: ⅜" = 1'-0"

NOTES:

1. FOR GENERAL STRUCTURAL NOTES SEE DWG TLC-S-101.
2. SEE SHEET TLC-S-128 FOR ABUTMENT WALL AND PILE CAP REINFORCEMENT.

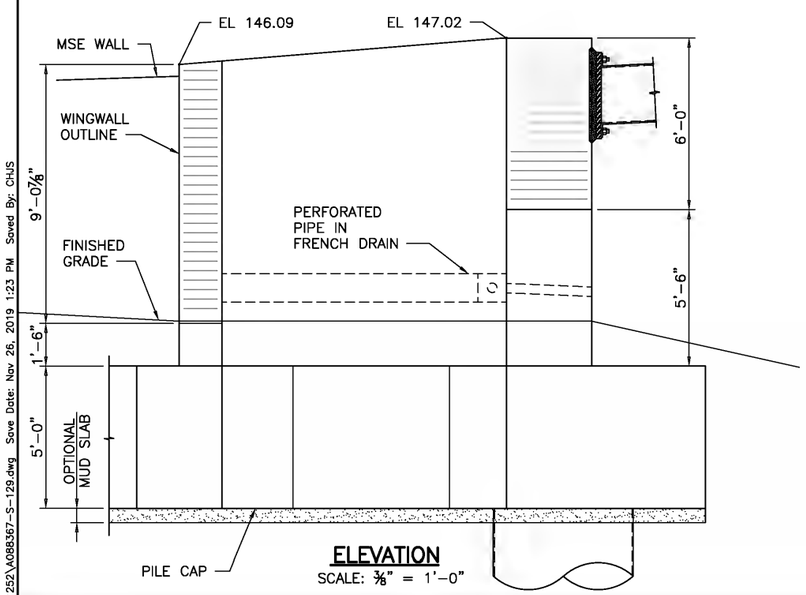

ELEVATION

SCALE: ⅜" = 1'-0"

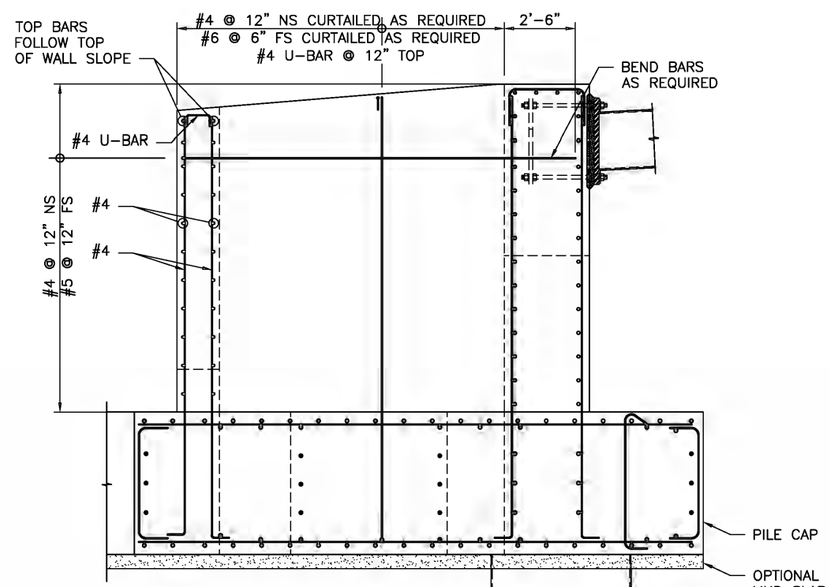

SECTION C

SCALE: ⅜" = 1'-0"

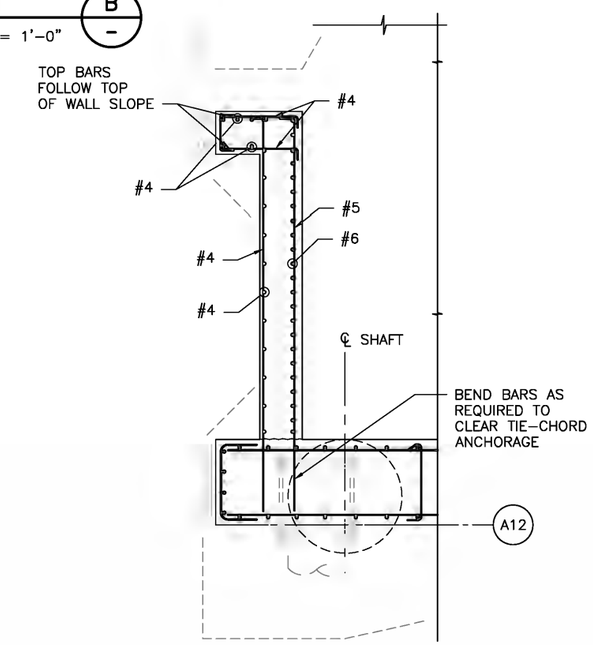

SECTION D

SCALE: ⅜" = 1'-0"

File: D:\Projectwise\COWI\d0301252\A088367-S-129.dwg Save Date: Nov 26, 2019 1:23 PM Saved By: CHJS

CITY OF KIRKLAND
DEPARTMENT OF PUBLIC WORKS
123 FIFTH AVENUE KIRKLAND, WA 98033
(425) 587-3800 www.kirklandwa.gov

NO.	DATE	BY	APPR.	REVISION
0	2019/12/06	CHJS	MWBM	ISSUE FOR BID

MATTHEW D. BACHMAN — STATE OF WASHINGTON — STRUCTURAL ENGINEER — PROFESSIONAL ENGINEER

COWI

APPROVED BY:

DATE:

SCVA 2019/12/06
DESIGNED BY: DATE

CHJS 2019/12/06
DRAWN BY: DATE

MWBM 2019/12/06
CHECKED BY: DATE

CITY OF KIRKLAND
TOTEM LAKE CONNECTION

NORTH ABUTMENT WINGWALL

SHEET: TLC-S-129
SCALE: AS SHOWN
FILENAME: A088367-S-129.dwg

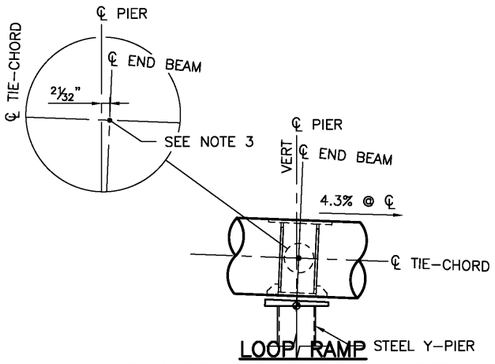

END BEAM DIMENSIONING DETAIL

SCALE: ½" = 1'-0"
(ONLY WITHIN LOOP RAMP)

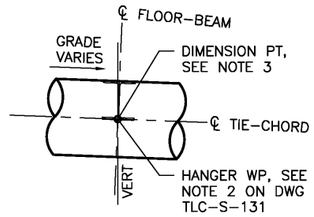

FLOOR-BEAM DIMENSIONING DETAIL

SCALE: ½" = 1'-0"

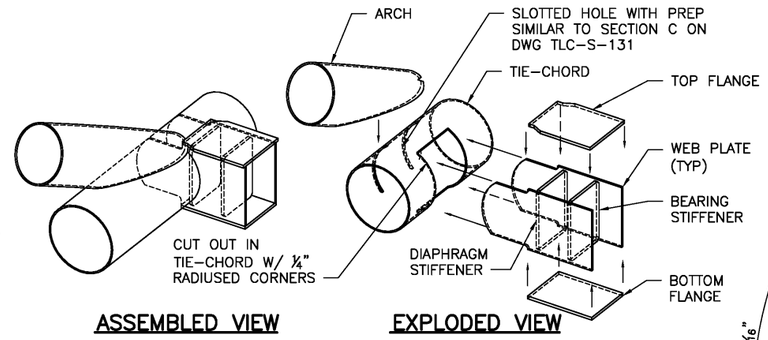

ASSEMBLED VIEW

EXPLODED VIEW

END BEAM ISOMETRIC DETAIL

SCALE: ½" = 1'-0"

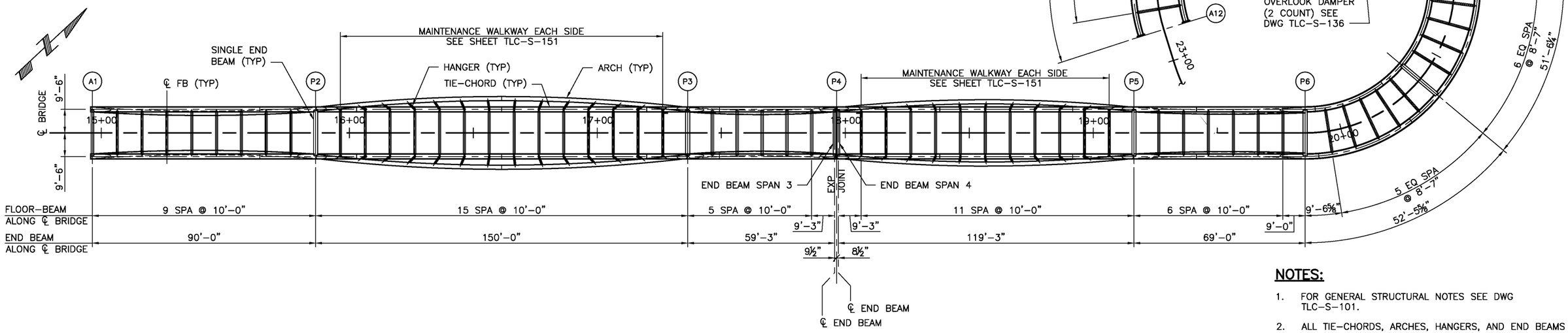

FRAMING PLAN

SCALE: 1" = 20'

TLC-S-130 TABLE 1: HANGER TYPES											
ID	TYPE	COUNT	BENT PLATE	ID	TYPE	COUNT	BENT PLATE	ID	TYPE	COUNT	BENT PLATE
H1	A	2	NO	H8	B	4	NO	H15	A	2	NO
	D	2	YES	H9	B	4	NO		B	2	NO
H2	A	2	NO	H10	B	4	NO	H16	A	4	NO
	C	2	YES	H11	A	2	NO	H17	A	4	NO
H3	A	2	NO		C	2	YES	H18	A	2	NO
	C	2	YES	H12	B	2	NO	H19	C	2	YES
H4	D	4	YES	H13	B	2	NO	H20	B	2	NO
H5	C	4	YES		D	2	YES	H21	A	2	NO
H6	B	4	NO	H14	A	2	NO	H22	B	2	NO
H7	B	4	NO		C	2	YES				

TLC-S-130 TABLE 2: HANGER DIMENSIONS		
TYPE	WALL THICKNESS	SIZE
A	0.25"	HSS 7.5
B	0.375"	HSS 7.5
C	0.5"	HSS 7.5
D	REINFORCED 0.5"	HSS 7.5

NOTES:

1. FOR GENERAL STRUCTURAL NOTES SEE DWG TLC-S-101.
2. ALL TIE-CHORDS, ARCHES, HANGERS, AND END BEAMS SHALL BE FABRICATED AS FRACTURE CRITICAL MEMBERS (FCM).
3. FLOOR-BEAM AND END BEAM SPACING IS MEASURED IN PLAN AT CENTERLINE OF TIE-CHORDS.
4. PRECAMBER OF SPANS 1-5 NOT REQUIRED.
5. FOR ILLUSTRATION OF HANGER LENGTH, SEE DWG TLC-S-132 SECTION B.
6. ARCH PIPES ARE 20"OD x ½".
7. TIE-CHORDS ARE 24" OD AND PARALLEL IN PLAN.
8. ARCHES AND HANGER GEOMETRY IS SYMMETRIC ABOUT BRIDGE CENTERLINE.
9. HANGERS ARE HSS 7.500, UNO.
10. EACH END-BEAM SHALL INCLUDE A ⅜" DIA DRAIN HOLE CENTERED WITHIN THE BOTTOM FLANGE AT ITS MIDSPAN.

CITY OF KIRKLAND
DEPARTMENT OF PUBLIC WORKS
123 FIFTH AVENUE KIRKLAND, WA 98033
(425) 587-3800 www.kirklandwa.gov

NO.	DATE	BY	APPR.	REVISION
0	2019/12/06	CHJS	MWBM	ISSUE FOR BID

COWI

APPROVED BY:

DATE:

SCVA 2019/12/06 DESIGNED BY: DATE
CHJS 2019/12/06 DRAWN BY: DATE
MWBM 2019/12/06 CHECKED BY: DATE

CITY OF KIRKLAND
TOTEM LAKE CONNECTION

SUPERSTRUCTURE FRAMING PLAN SHEET 1

SHEET: TLC-S-130
SCALE: AS SHOWN
FILENAME: A088367-S-130.dwg

File: D:\Projectwise\COWI\d0301252\A088367-S-130.dwg Save Date: Nov 26, 2019 1:21 PM Saved By: CHJS

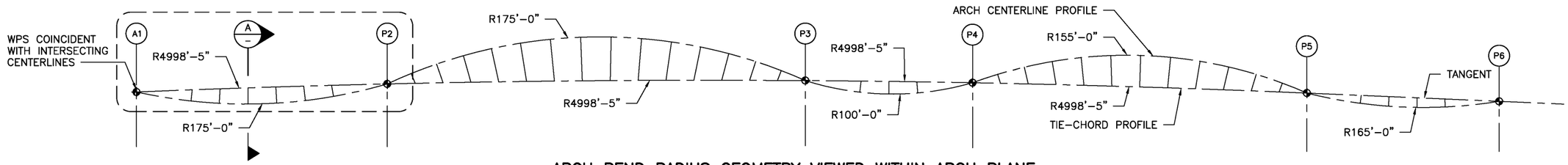

ARCH BEND RADIUS GEOMETRY VIEWED WITHIN ARCH PLANE

SCALE: 1" = 20'

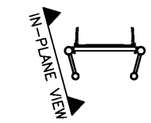

SECTION A

SCALE: 1" = 20'

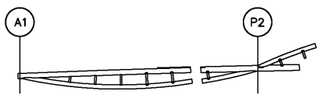

STEEL SUBASSEMBLY KEYPLAN

SCALE: NTS

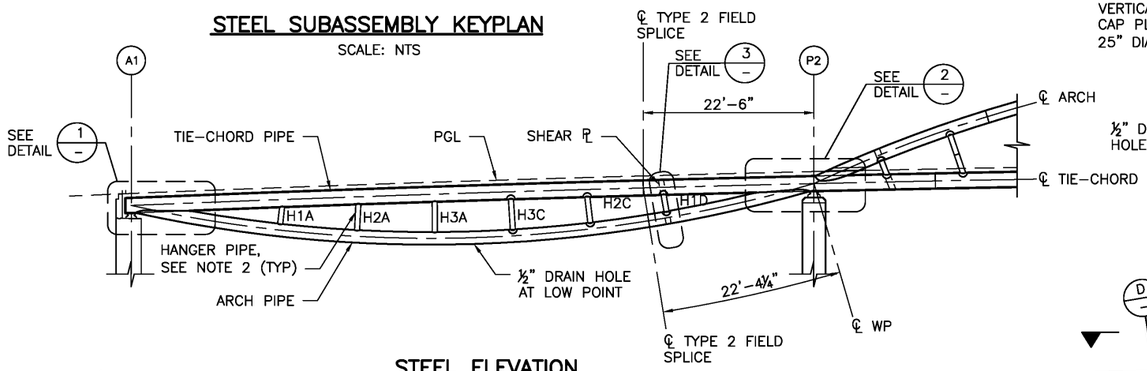

STEEL ELEVATION

SCALE: 1" = 10'

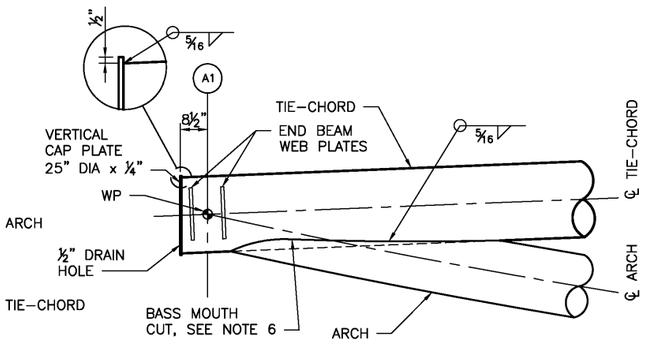

DETAIL 1

SCALE: ½" = 1'-0"
(A1 KNUCKLE)

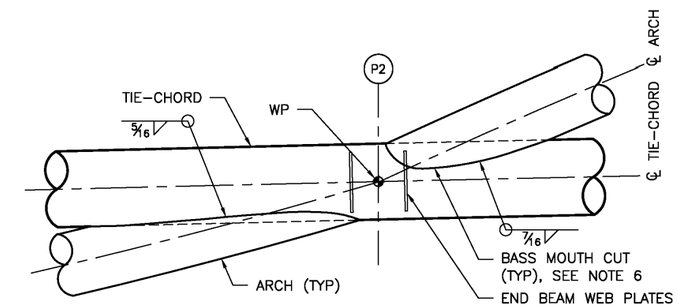

DETAIL 2

SCALE: ½" = 1'-0"
(P2 KNUCKLE)

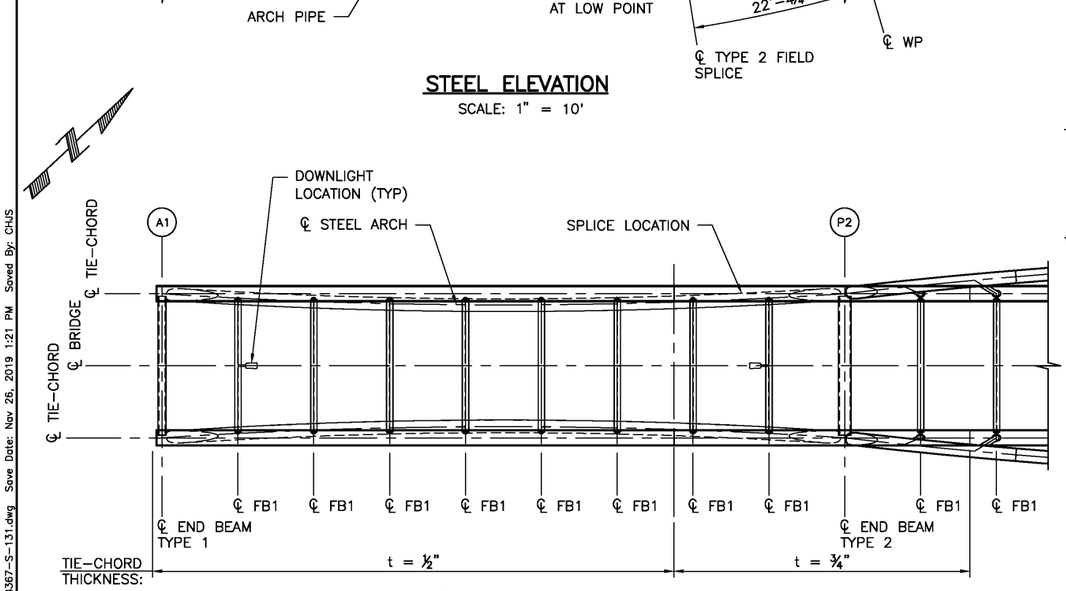

FRAMING PLAN

SCALE: 1" = 10'

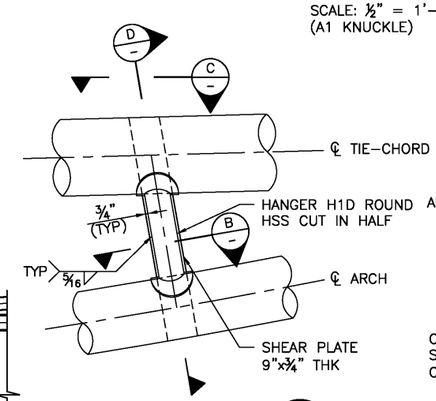

DETAIL 3

SCALE: ½" = 1'-0"

(SHEAR PLATE REQ'D AT TYPE D HANGERS ONLY)

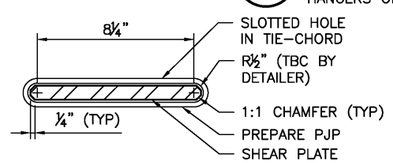

SECTION C

SCALE: 3" = 1'-0"

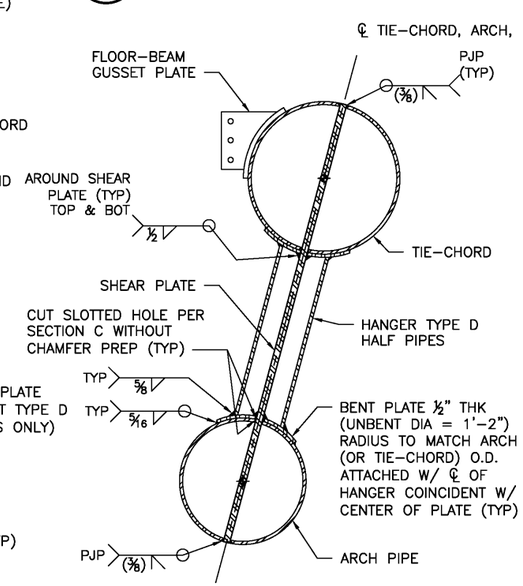

SECTION D

SCALE: 1" = 1'-0"

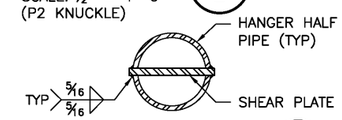

SECTION B

SCALE: 1½" = 1'-0"

NOTES:

1. FOR GENERAL STRUCTURAL NOTES SEE DWG TLC-S-101 AND DWG TLC-S-130.
2. HANGERS ARE PERPENDICULAR TO ARCH CENTERLINE AND COINCIDENT WITH FLOOR-BEAM AND TIE-CHORD CENTERLINES.
3. FOR HANGER SIZE SEE TABLE TLC-S-130 TABLES 1 AND 2.
4. ARCH DIMENSIONS ARE DRAWN IN TRUE ELEVATION AT CENTERLINE OF ARCH PIPE AND VARY FROM ACTUAL IN-PLANE DIMENSIONS.
5. ARCHES ARE PLANAR AND ROTATED 15-DEGREES ABOUT THE AXIS DRAWN THROUGH THE WORKPOINTS AT EACH END OF THE RESPECTIVE SPAN.
6. KNUCKLES ARE FORMED THROUGH A DIRECT WELDED CONNECTION OF THE ARCH BASS MOUTH CUT TO THE TIE-CHORD, TRIMMED TO ACCOMMODATE END BEAM WHERE REQUIRED. ARCH SHALL BE WELDED TO END BEAM AS REQUIRED TO CREATE A CONTINUOUS WELD.
7. LOCATE ARCH PIPE SEAMS ALONG INNER RADIUS SUCH THAT IT FOLLOWS THE PLANE OF BENDING.
8. FOR HANGER TYPES A, B AND C DETAILS, SEE DWG TLC-S-132.

CITY OF KIRKLAND
DEPARTMENT OF PUBLIC WORKS
123 FIFTH AVENUE KIRKLAND, WA 98033
(425) 587-3800 www.kirklandwa.gov

NO.	DATE	BY	APPR.	REVISION
0	2019/12/06	CHJS	MWBM	ISSUE FOR BID

MATTHEW D. BAUGHMAN — STATE OF WASHINGTON — STRUCTURAL ENGINEER — PROFESSIONAL ENGINEER

COWI

APPROVED BY:

DATE:

SCVA DESIGNED BY: 2019/12/06 DATE
CHJS DRAWN BY: 2019/12/06 DATE
MWBM CHECKED BY: 2019/12/06 DATE

CITY OF KIRKLAND
TOTEM LAKE CONNECTION

SUPERSTRUCTURE FRAMING PLAN SHEET 2

SHEET: TLC-S-131
SCALE: AS SHOWN
FILENAME: A088367-S-131.dwg

File: D:\Projectwise\COWI\d0301252\A088367-S-131.dwg Save Date: Nov 26, 2019 1:21 PM Saved By: CHJS

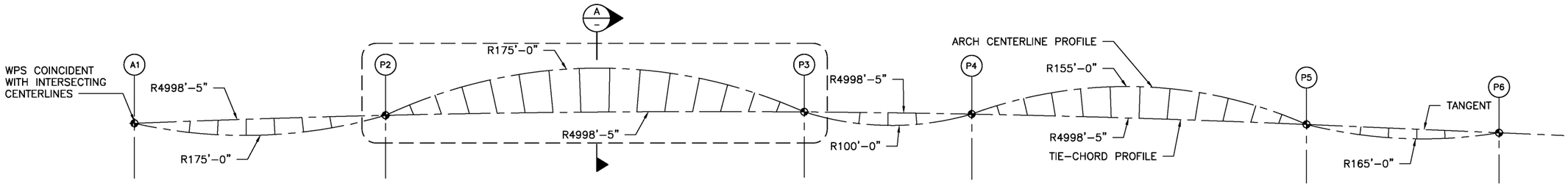

ARCH BEND RADIUS GEOMETRY VIEWED WITHIN ARCH PLANE

SCALE: 1" = 20'

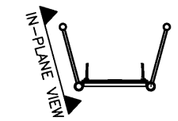

SECTION A

SCALE: 1" = 20'

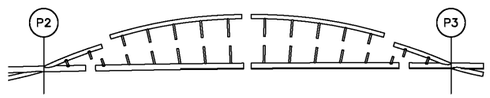

STEEL SUBASSEMBLY KEYPLAN

SCALE: NTS

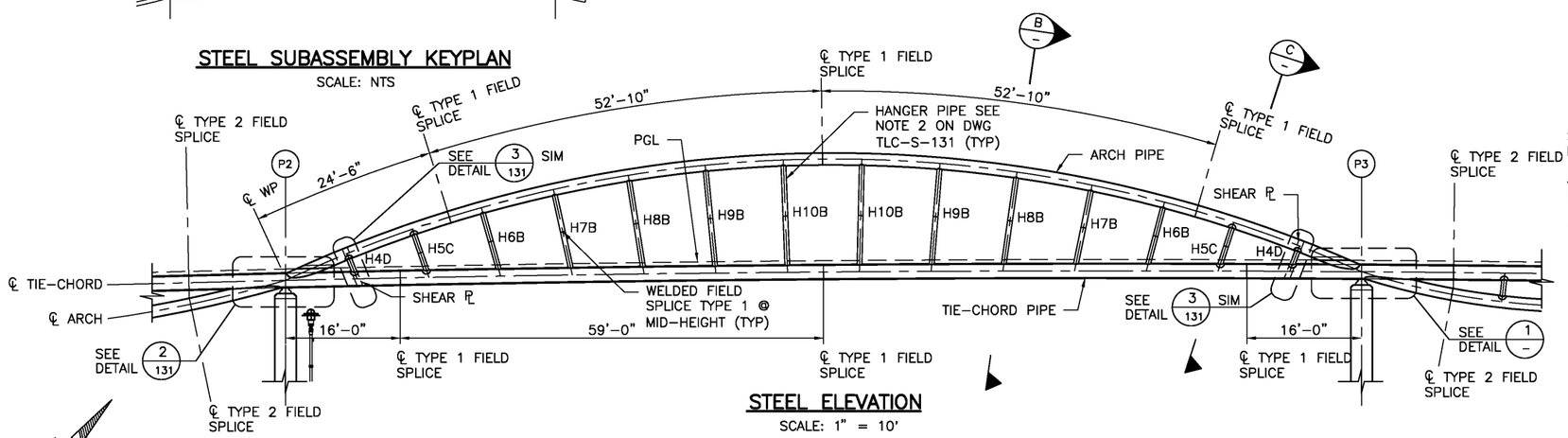

STEEL ELEVATION

SCALE: 1" = 10'

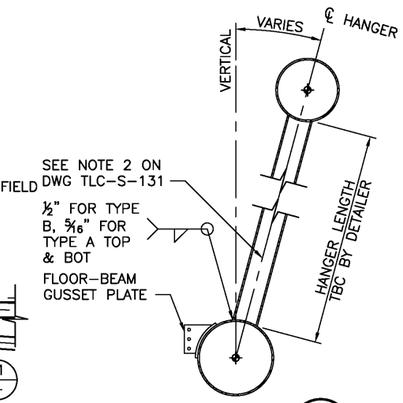

SECTION B

SCALE: ½" = 1'-0"
(GENERAL HANGER GEOMETRY TYPE A & B)

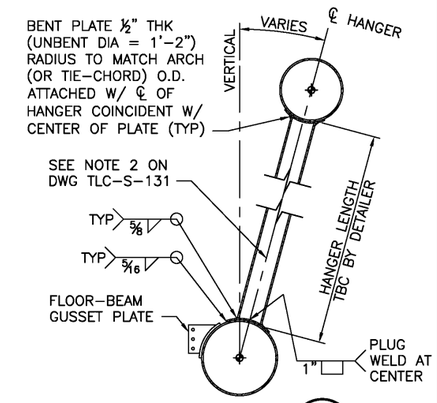

SECTION C

SCALE: ½" = 1'-0"
(GENERAL HANGER GEOMETRY TYPE C)

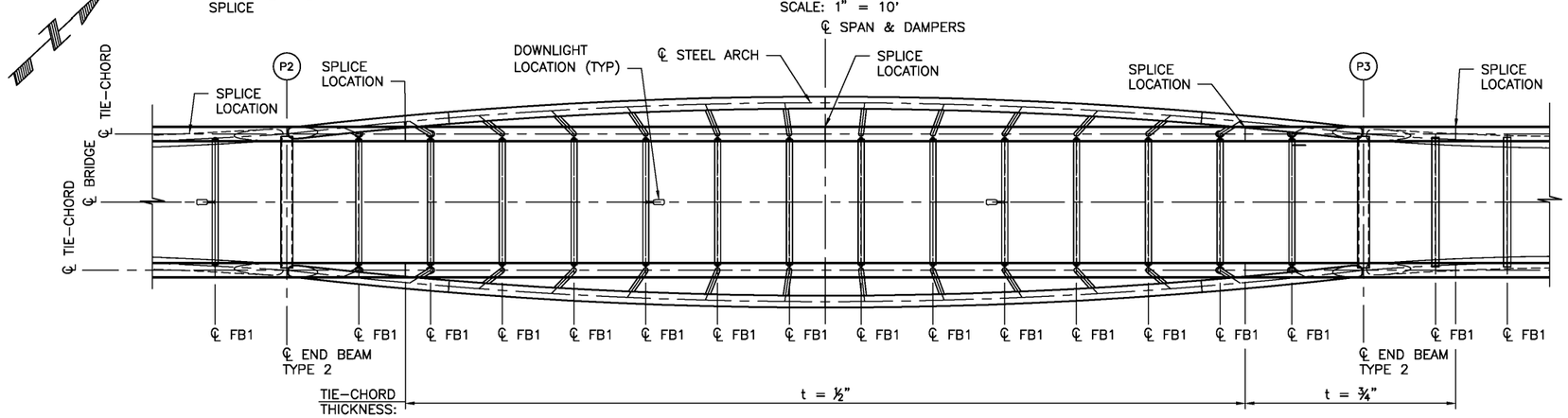

FRAMING PLAN

SCALE: 1" = 10'

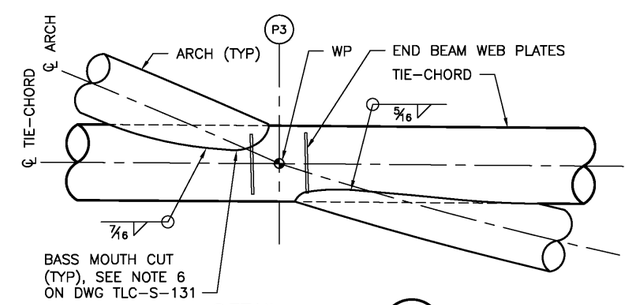

DETAIL 1

SCALE: ½" = 1'-0"
(P3 KNUCKLE)

NOTES:

1. FOR NOTES SEE DWG TLC-S-131.

CITY OF KIRKLAND
DEPARTMENT OF PUBLIC WORKS
123 FIFTH AVENUE KIRKLAND, WA 98033
(425) 587-3800 www.kirklandwa.gov

NO.	DATE	BY	APPR.	REVISION
0	2019/12/06	CHJS	MWBM	ISSUE FOR BID

MATTHEW D. BAUGHMAN — STATE OF WASHINGTON — STRUCTURAL ENGINEER — PROFESSIONAL ENGINEER

COWI

APPROVED BY:

DATE:

SCVA — DESIGNED BY — 2019/12/06 DATE
CHJS — DRAWN BY — 2019/12/06 DATE
MWBM — CHECKED BY — 2019/12/06 DATE

CITY OF KIRKLAND
TOTEM LAKE CONNECTION

SUPERSTRUCTURE FRAMING PLAN SHEET 3

SHEET: TLC-S-132
SCALE: AS SHOWN
FILENAME: A088367-S-131.dwg

File: D:\Projectwise\COWI\d0301252\A088367-S-131.dwg Save Date: Nov 26, 2019 1:21 PM Saved By: CHJS

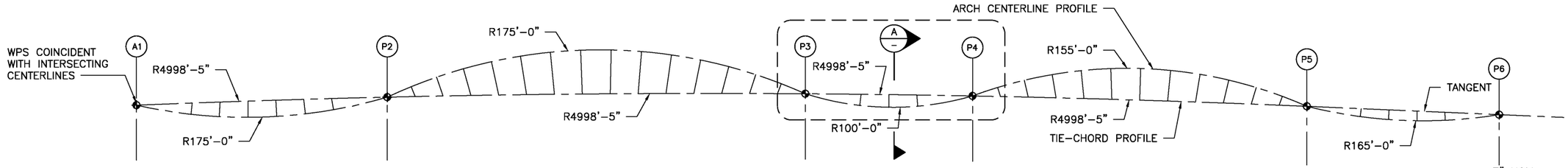

ARCH BEND RADIUS GEOMETRY VIEWED WITHIN ARCH PLANE

SCALE: 1" = 20'

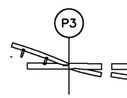

STEEL SUBASSEMBLY KEYPLAN

SCALE: NTS

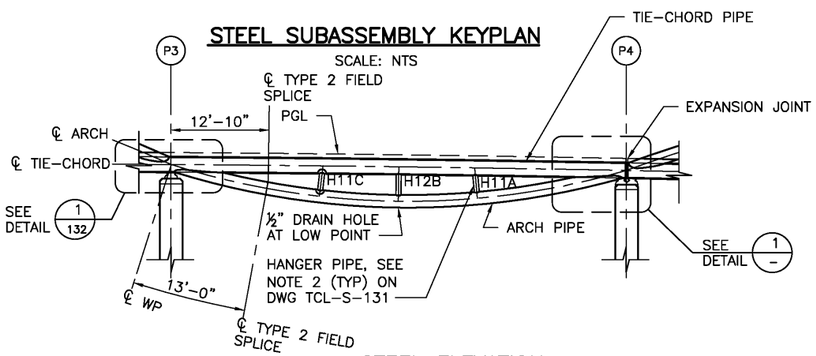

STEEL ELEVATION

SCALE: 1" = 10'

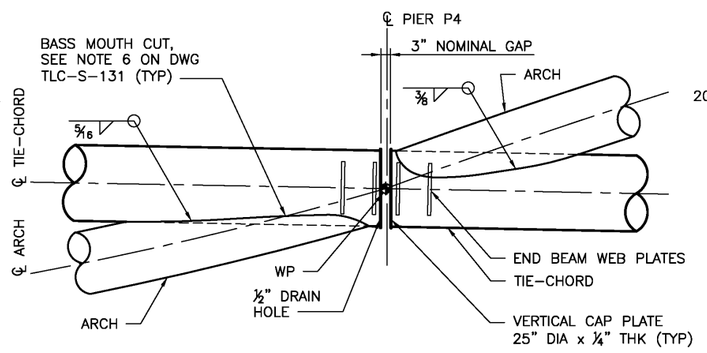

DETAIL 1

SCALE: ½" = 1'-0"
(P4 KNUCKLES)

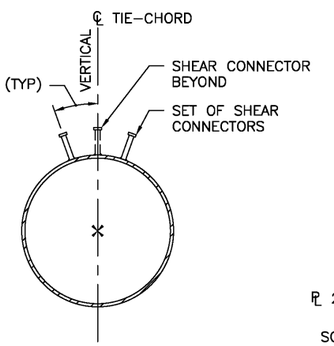

SECTION B

SCALE: 1" = 1'-0"

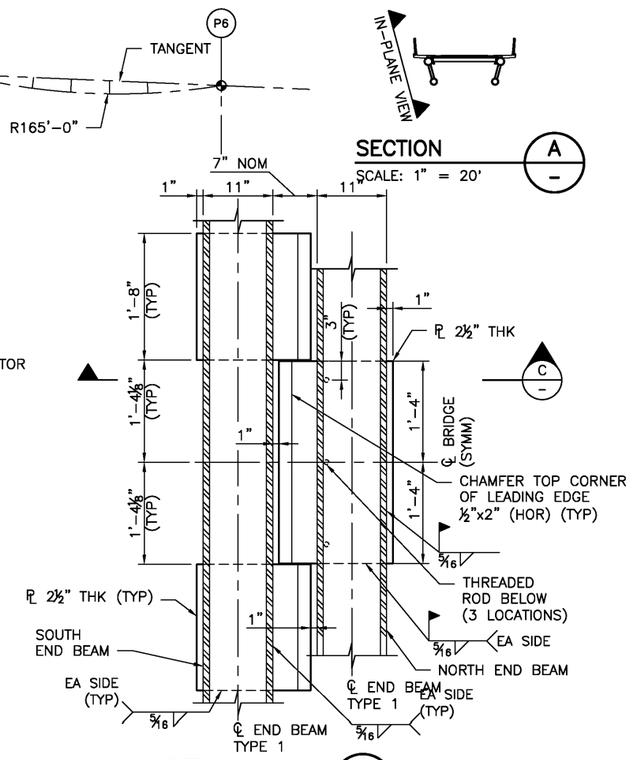

SECTION A

SCALE: 1" = 20'

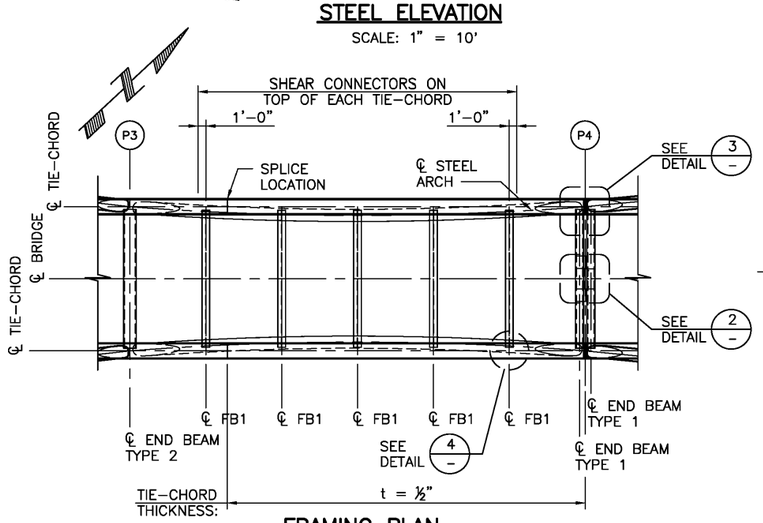

FRAMING PLAN

SCALE: 1" = 10'

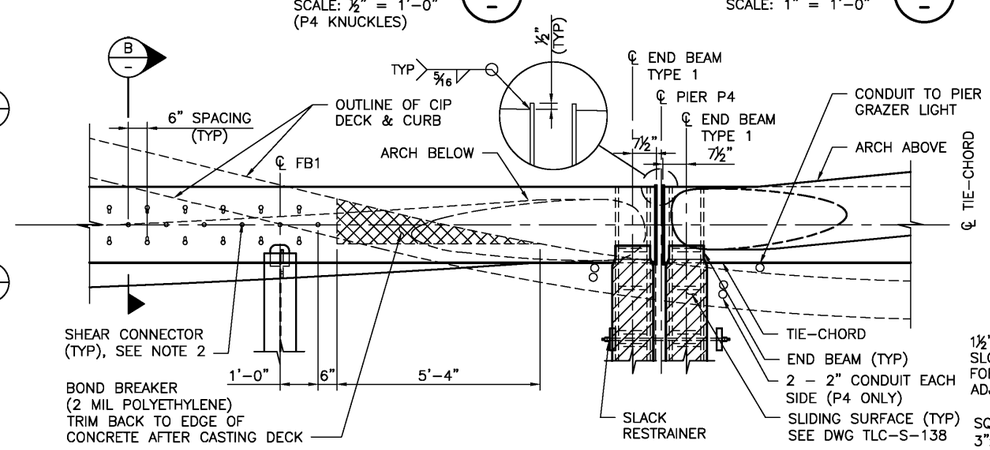

DETAIL 3

SCALE: ½" = 1'-0"
(PIER 4 SHOWN, PIER 3 SIMILAR EXCEPT JOINT AT PIER 4)

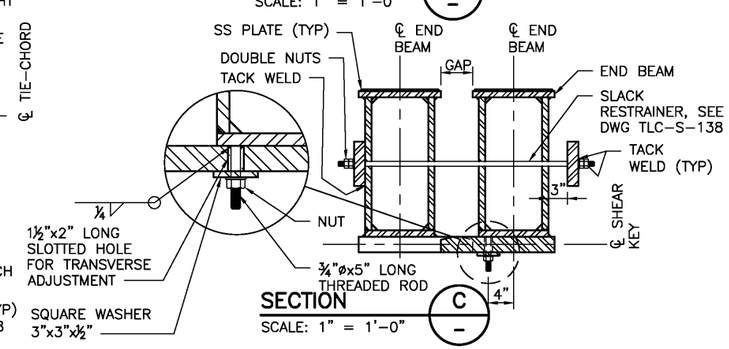

DETAIL 2 (SHEAR KEY DETAIL)

SCALE: 1" = 1'-0"

SECTION C

SCALE: 1" = 1'-0"

NOTES:

1. FOR NOTES SEE DWG TLC-S-131.
2. SHEAR CONNECTORS INSTALLED PERPENDICULAR TO TIE-CHORD PIPE ALONG SPAN 3 ONLY.
3. FOR HANGER TYPES A, B AND C DETAILS, SEE DWG TLC-S-132.

CITY OF KIRKLAND
DEPARTMENT OF PUBLIC WORKS
123 FIFTH AVENUE KIRKLAND, WA 98033
(425) 587-3800 www.kirklandwa.gov

NO.	DATE	BY	APPR.	REVISION
0	2019/12/06	CHJS	MWBM	ISSUE FOR BID

MATTHEW D. BAUGHMAN — STATE OF WASHINGTON — STRUCTURAL ENGINEER — PROFESSIONAL ENGINEER

COWI

APPROVED BY:

DATE:

SCVA	2019/12/06	DESIGNED BY: DATE
CHJS	2019/12/06	DRAWN BY: DATE
MWBM	2019/12/06	CHECKED BY: DATE

CITY OF KIRKLAND
TOTEM LAKE CONNECTION

SUPERSTRUCTURE FRAMING PLAN SHEET 4

SHEET: TLC-S-133
SCALE: AS SHOWN
FILENAME: A088367-S-131.dwg

File: D:\Projectwise\COWI\d0301252\A088367-S-131.dwg Save Date: Nov 26, 2019 1:21 PM Saved By: CHJS

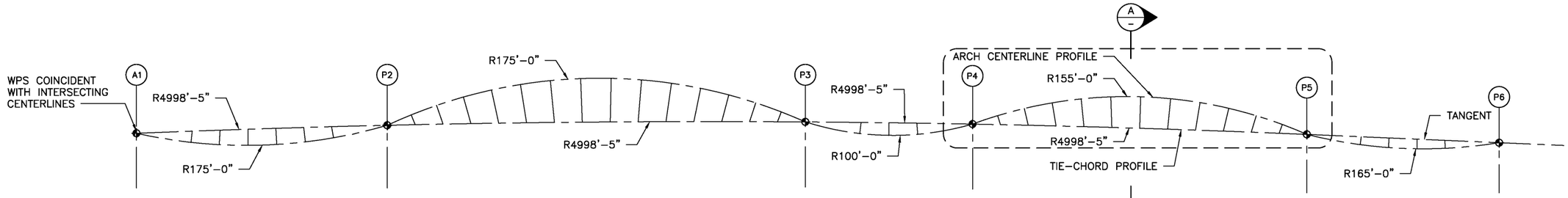

ARCH BEND RADIUS GEOMETRY VIEWED WITHIN ARCH PLANE

SCALE: 1" = 20'

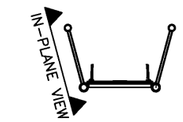

SECTION A/-

SCALE: 1" = 20'

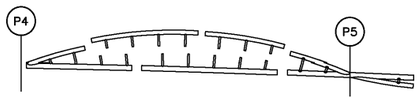

STEEL SUBASSEMBLY KEYPLAN

SCALE: NTS

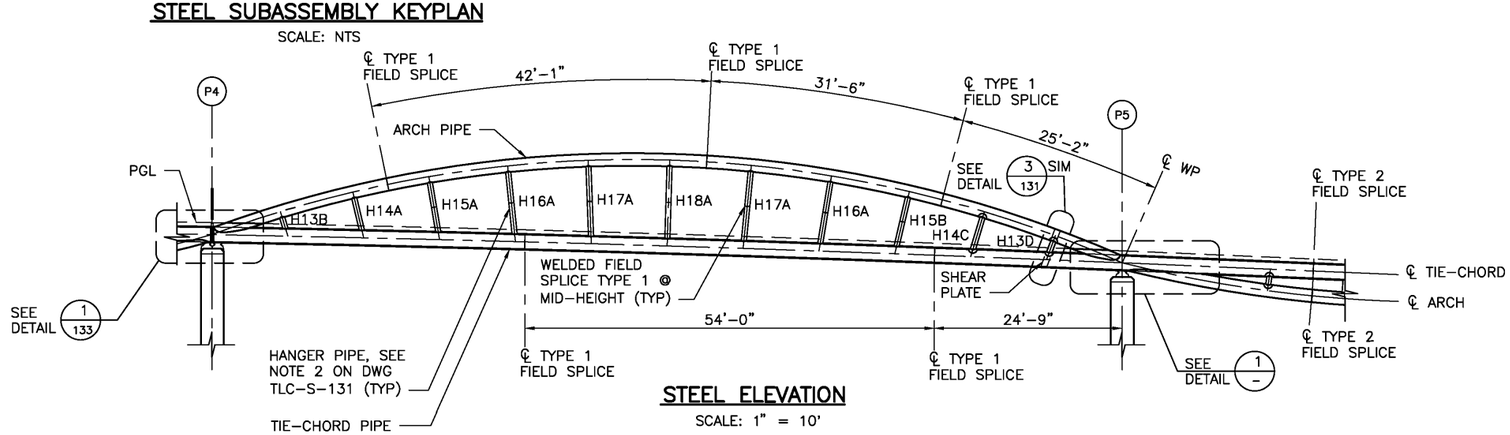

STEEL ELEVATION

SCALE: 1" = 10'

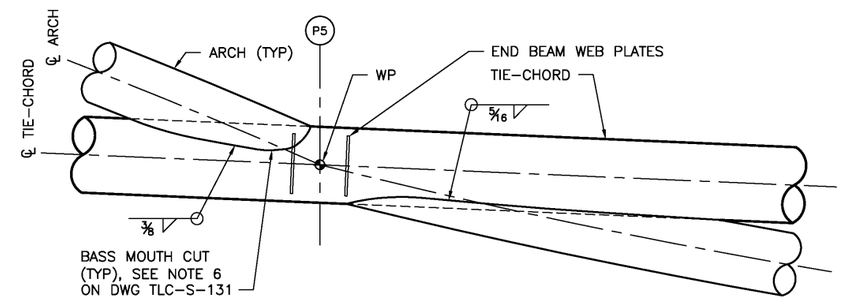

DETAIL 1/-

SCALE: ½" = 1'-0"
(P5 KNUCKLE)

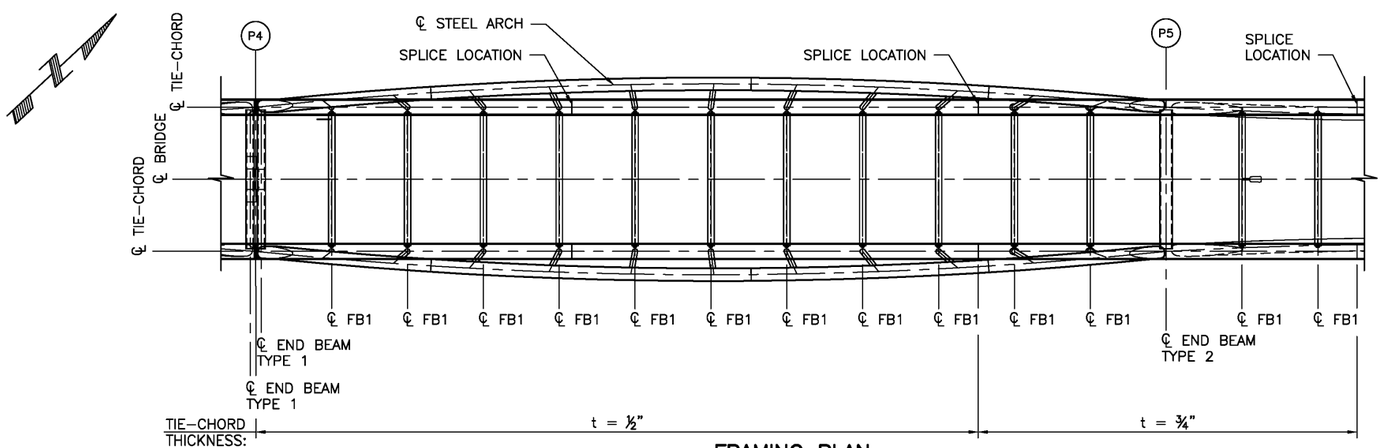

FRAMING PLAN

SCALE: 1" = 10'

NOTES:

1. FOR NOTES SEE DWG TLC-S-131.
2. TIE-CHORDS ARE STRAIGHT (UNBENT IN ELEVATION) FROM PIER P5 TO PIER P6.
3. FOR HANGER TYPES A, B AND C DETAILS SEE DWG TLC-S-132.

CITY OF KIRKLAND
DEPARTMENT OF PUBLIC WORKS
123 FIFTH AVENUE KIRKLAND, WA 98033
(425) 587-3800 www.kirklandwa.gov

NO.	DATE	BY	APPR.	REVISION
0	2019/12/06	CHJS	MWBM	ISSUE FOR BID

MATTHEW D. BAUGHMAN — STATE OF WASHINGTON — STRUCTURAL ENGINEER — PROFESSIONAL ENGINEER

COWI

APPROVED BY:

DATE:

SCVA DESIGNED BY. 2019/12/06 DATE
CHJS DRAWN BY. 2019/12/06 DATE
MWBM CHECKED BY. 2019/12/06 DATE

CITY OF KIRKLAND
TOTEM LAKE CONNECTION

SUPERSTRUCTURE FRAMING PLAN SHEET 5

SHEET: TLC-S-134
SCALE: AS SHOWN
FILENAME: A088367-S-131.dwg

File: D:\Projectwise\COWI\d0301252\A088367-S-131.dwg Save Date: Nov 26, 2019 1:21 PM Saved By: CHJS

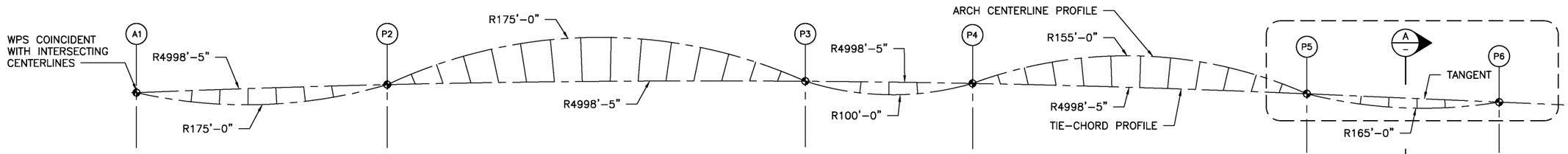

ARCH BEND RADIUS GEOMETRY VIEWED WITHIN ARCH PLANE

SCALE: 1" = 20'

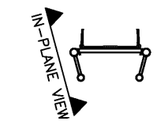

SECTION A/–

SCALE: 1" = 20'

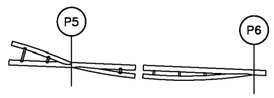

STEEL SUBASSEMBLY KEYPLAN

SCALE: NTS

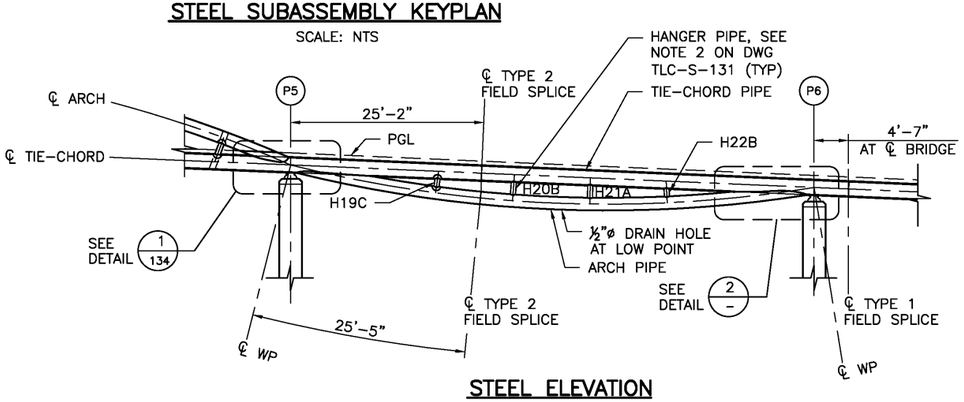

STEEL ELEVATION

SCALE: 1" = 10'

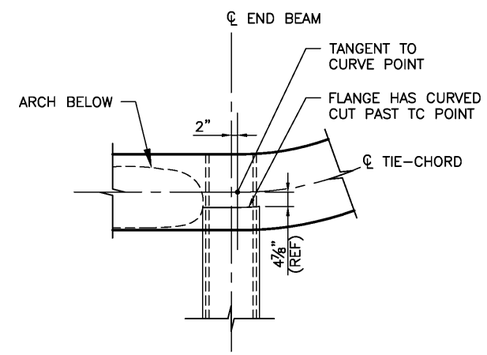

DETAIL 1/–

SCALE: NTS

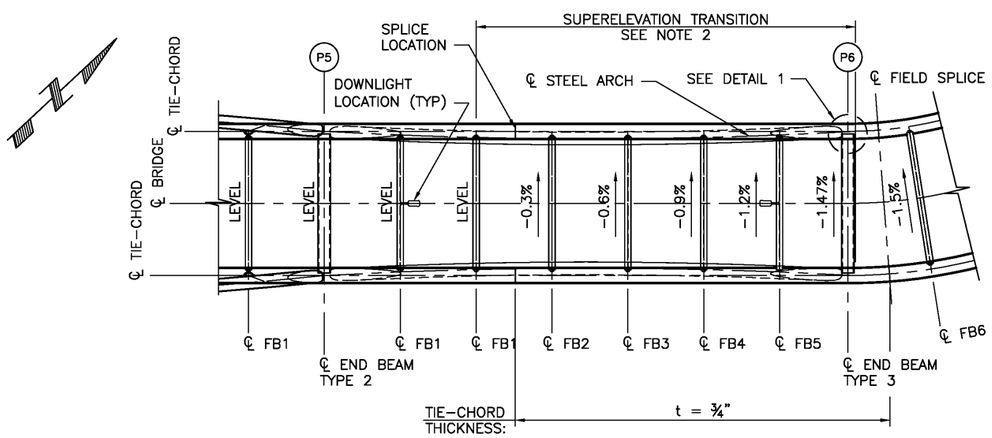

FRAMING PLAN

SCALE: 1" = 10'

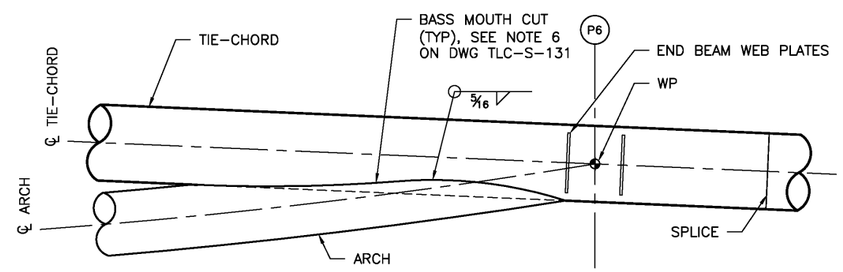

DETAIL 2/–

SCALE: ½" = 1'-0"
(P6 KNUCKLE)

NOTES:

1. FOR NOTES SEE DWG TLC-S-131.
2. SUPERELEVATION TRANSITION OF DECK OCCURS OVER SPAN 5 UTILIZING INCREMENTAL SLOPING OF THE FLOOR-BEAMS UNTIL THE FULL SUPERELEVATION IS ACHIEVED NEAR PIER P6.
3. TIE-CHORDS ARE STRAIGHT (UNBENT IN ELEVATION) FROM PIER P5 TO PIER P6.
4. FOR HANGER TYPES A, B AND C DETAILS SEE DWG TLC-S-132.

CITY OF KIRKLAND
DEPARTMENT OF PUBLIC WORKS
123 FIFTH AVENUE KIRKLAND, WA 98033
(425) 587-3800 www.kirklandwa.gov

NO.	DATE	BY	APPR.	REVISION
0	2019/12/06	CHJS	MWBM	ISSUE FOR BID

MATTHEW D. BAUGHMAN — STATE OF WASHINGTON — STRUCTURAL ENGINEER — PROFESSIONAL ENGINEER

COWI

APPROVED BY:

DATE:

SCVA 2019/12/06 — DESIGNED BY: DATE
CHJS 2019/12/06 — DRAWN BY: DATE
MWBM 2019/12/06 — CHECKED BY: DATE

CITY OF KIRKLAND
TOTEM LAKE CONNECTION

SUPERSTRUCTURE FRAMING PLAN SHEET 6

SHEET: TLC-S-135
SCALE: AS SHOWN
FILENAME: A088367-S-131.dwg

File: D:\Projectwise\COWI\d0301252\A088367-S-131.dwg Save Date: Nov 26, 2019 1:21 PM Saved By: CHJS

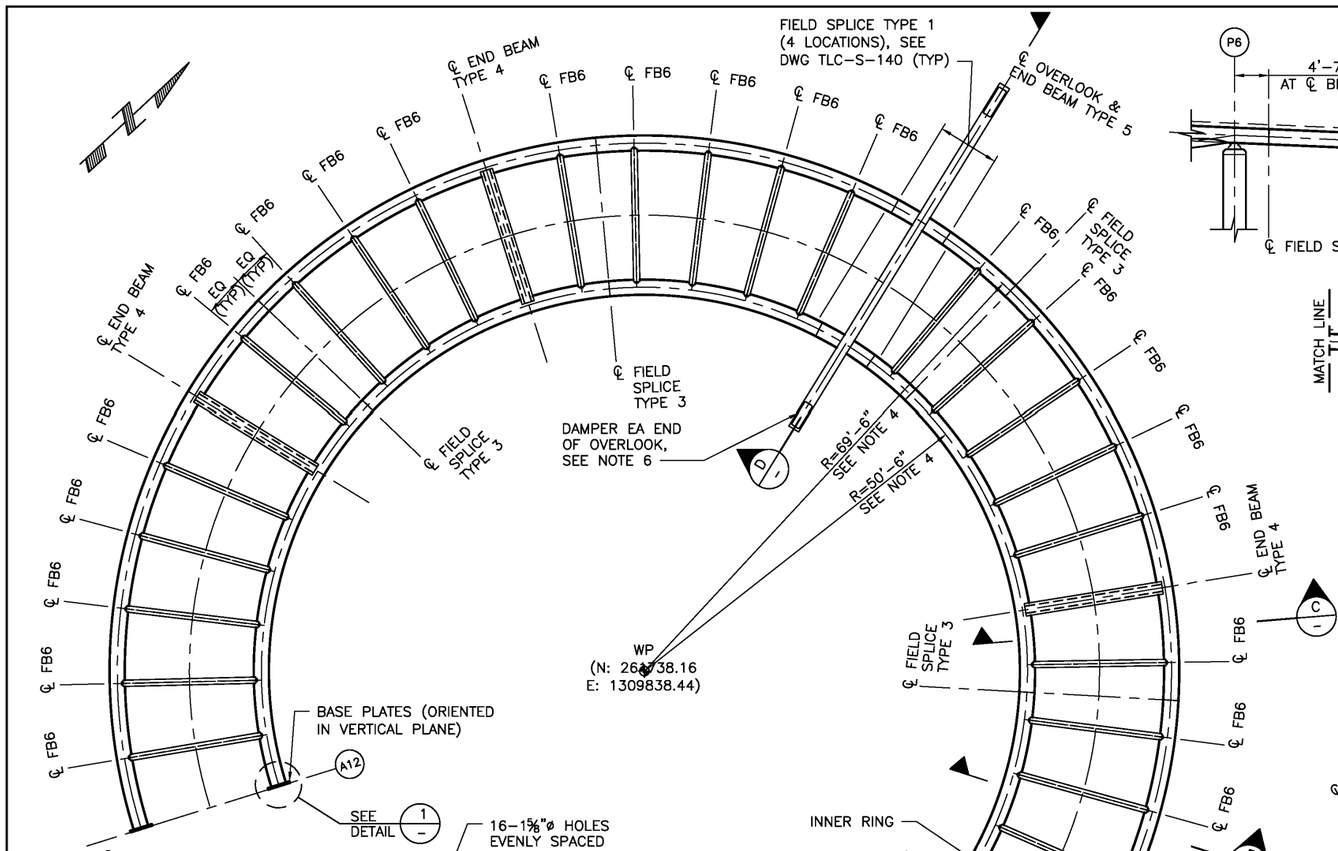

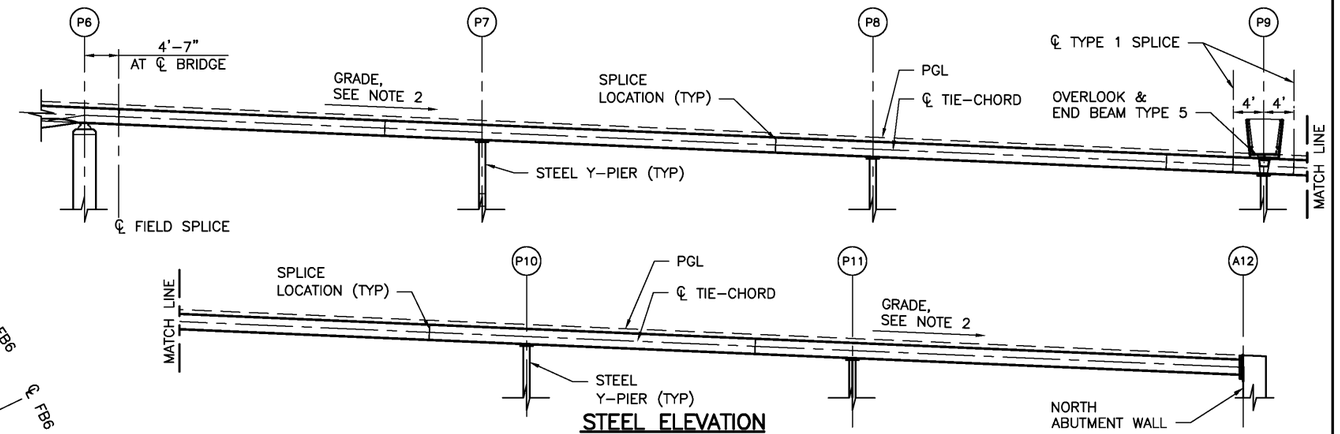

STEEL ELEVATION

SCALE: 1" = 10'

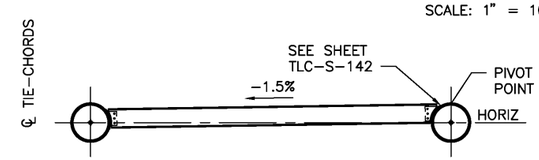

SECTION B

SCALE: ¼" = 1'-0"
(TYP ALL LOOP RAMP FLOOR-BEAMS)

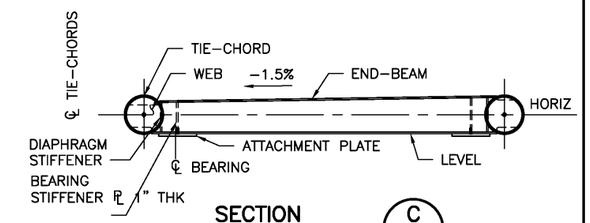

SECTION C

SCALE: ¼" = 1'-0"
(P7, P8, P10 & P11 END BEAMS)

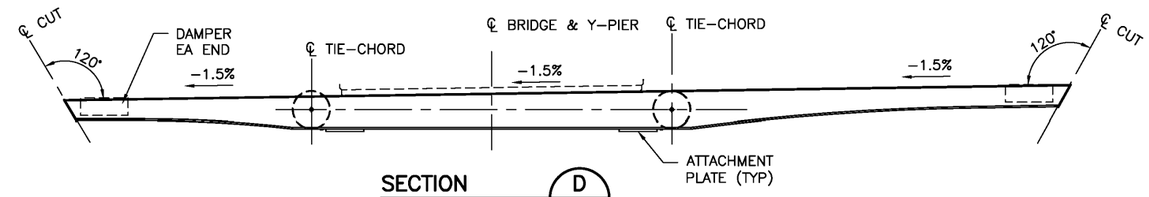

SECTION D

SCALE: ¼" = 1'-0"
(WALKWAY FRAMING NOT SHOWN FOR CLARITY)

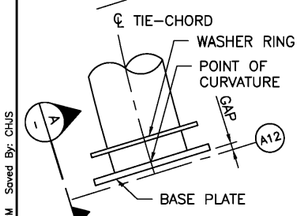

DETAIL 1

SCALE: ½" = 1'-0"

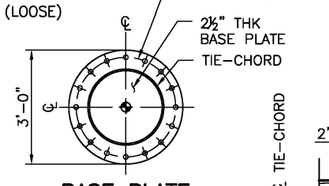

BASE PLATE

SCALE: ½" = 1'-0"

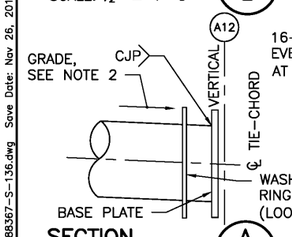

SECTION A

SCALE: ½" = 1'-0"

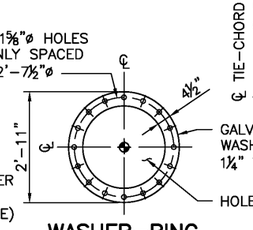

WASHER-RING

SCALE: ½" = 1'-0"

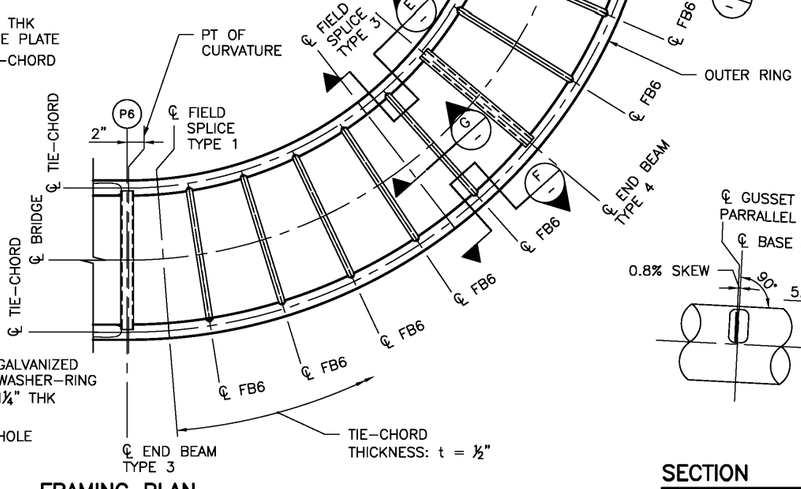

FRAMING PLAN

SCALE: 1" = 10'

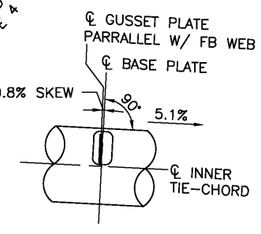

SECTION E

SCALE: ¼" = 1'-0"

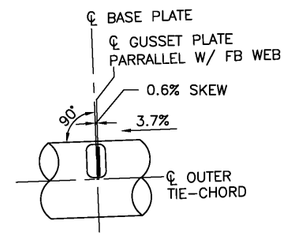

SECTION F

SCALE: ¼" = 1'-0"

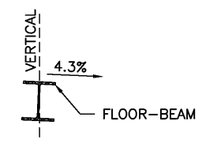

SECTION G

SCALE: ¼" = 1'-0"

NOTES:

1. FOR NOTES SEE DWG TLC-S-131.
2. TIE-CHORDS ARE PARALLEL IN PLAN AND FOLLOW A GRADE AT TIE-CHORD CENTERLINE OF 5.1% ALONG THE INNER RING AND 3.7% ALONG THE OUTER RING.
3. TIE-CHORD CENTERLINES FOR INNER AND OUTER RINGS ARE COINCIDENT WITH THE HORIZONTAL AXIS AT EACH RADIAL SECTION.
4. TIE-CHORD BEND RADII SHALL ACCOUNT FOR INNER AND OUTER GRADE.
5. FIELD SPLICES OCCUR IN INNER AND OUTER RINGS AT LOCATIONS INDICATED.
6. DAMPER AND ASSOCIATED FRAMING/CONNECTIONS SHALL BE DESIGNED AND SUPPLIED BY DAMPER MANUFACTURER. FLOOR-BEAM CAPACITY SHALL BE CONFIRMED WITH CALCULATIONS SUBMITTED TO ENGINEER FOR REVIEW AND ACCEPTANCE.

CITY OF KIRKLAND
DEPARTMENT OF PUBLIC WORKS
123 FIFTH AVENUE KIRKLAND, WA 98033
(425) 587-3800 www.kirklandwa.gov

NO.	DATE	BY	APPR.	REVISION
0	2019/12/06	CHJS	MWBM	ISSUE FOR BID

MATTHEW D. BAUGHMAN — STATE OF WASHINGTON — STRUCTURAL ENGINEER — PROFESSIONAL ENGINEER

COWI

APPROVED BY:

DATE:

SCVA DESIGNED BY.	2019/12/06 DATE
CHJS DRAWN BY.	2019/12/06 DATE
MWBM CHECKED BY.	2019/12/06 DATE

CITY OF KIRKLAND
TOTEM LAKE CONNECTION

SUPERSTRUCTURE FRAMING PLAN SHEET 7

SHEET: TLC-S-136
SCALE: AS SHOWN
FILENAME: A088367-S-136.dwg

File: D:\Projectwise\COWI\d0301252\A088367-S-136.dwg Save Date: Nov 26, 2019 1:22 PM Saved By: CHJS

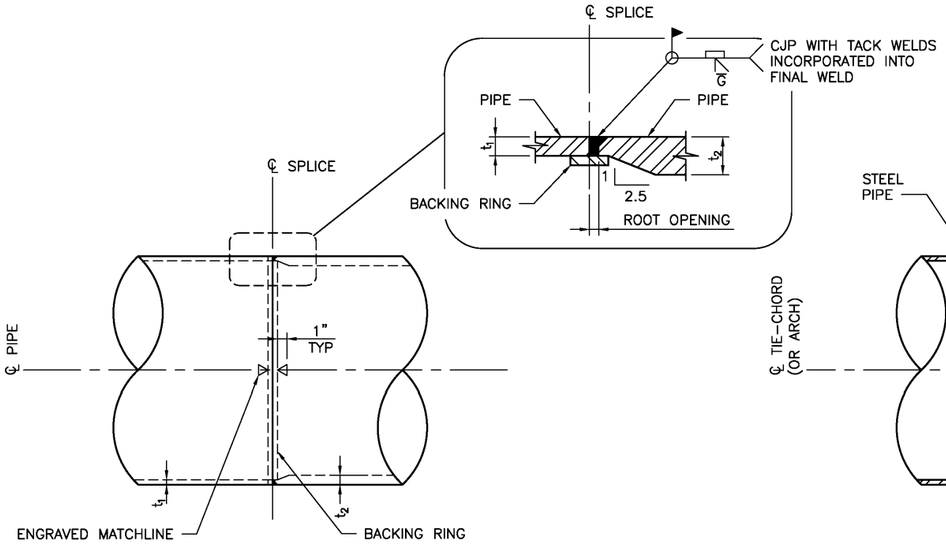

TIE–CHORD, ARCH & HANGER TYPE 1 SPLICE WELDED DETAIL (1/–)

SCALE: 1½" = 1'–0"
(VIEW IN PLAN)

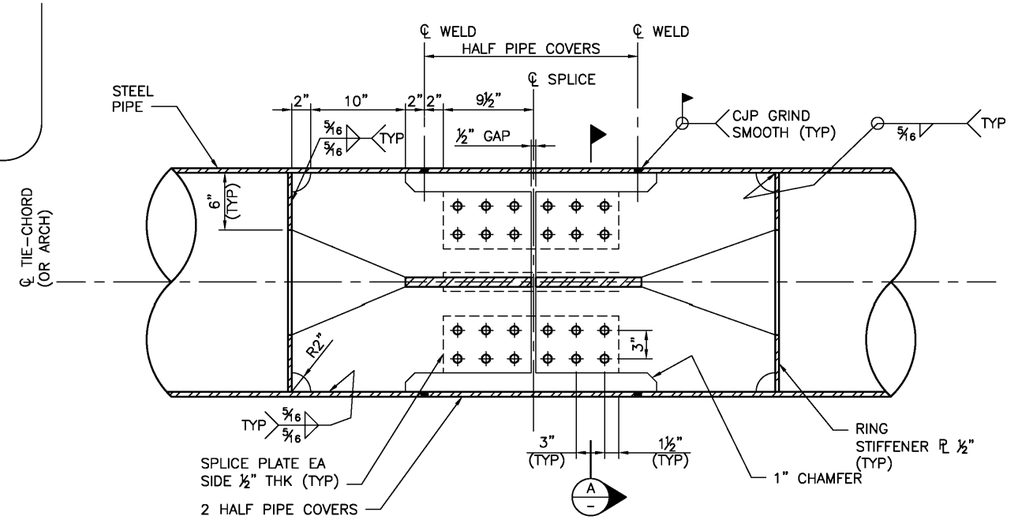

TIE–CHORD & ARCH TYPE 2 SPLICE BOLTED DETAIL (2/–)

SCALE: 1½" = 1'–0"
(VIEW DOWN ON PLANE,
SECTION THRU MID–HEIGHT OF PIPE)

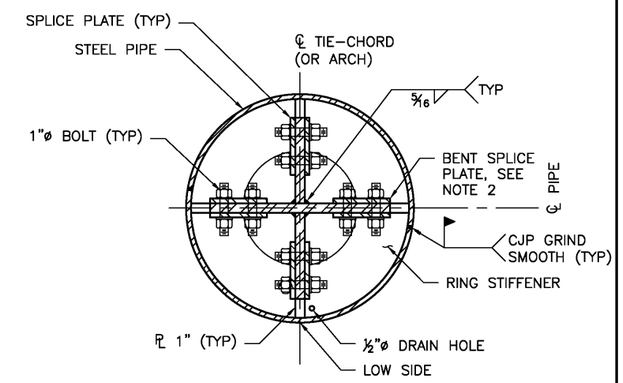

SECTION (A/–)

SCALE: 1½" = 1'–0"

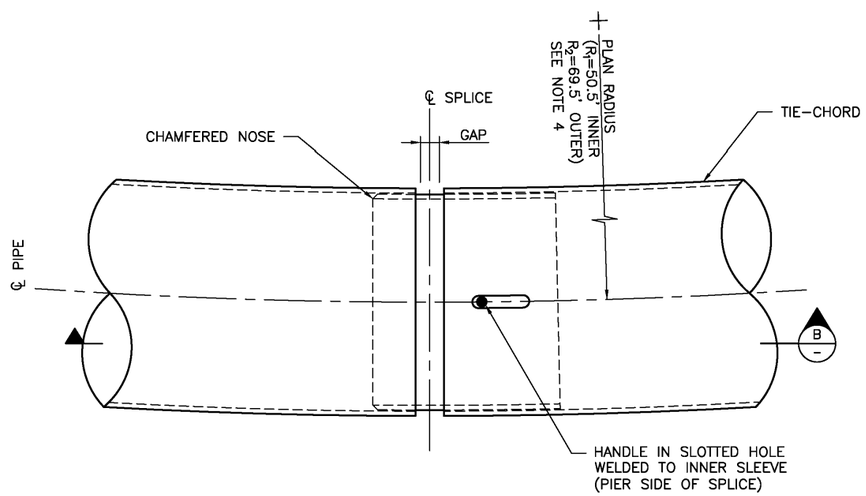

TIE–CHORD TYPE 3 SPLICE TELESCOPING DETAIL (3/–)

SCALE: 1½" = 1'–0"
(AT TIE–CHORD CENTERLINE
REFLECTED CEILING)

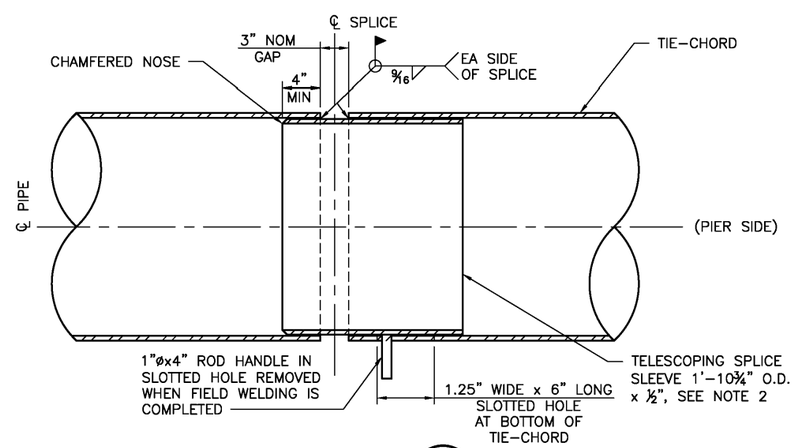

SECTION (B/–)

SCALE: 1½" = 1'–0"

NOTES:

1. FOR GENERAL STRUCTURAL NOTES SEE DWG TLC–S–101.
2. STEEL DETAILER SHALL ACCOUNT FOR CURVATURE OF MEMBERS IN FIELD SPLICE ASSEMBLIES, AND VERIFY DIAMETER OF TELESCOPING PIECE WORKS WITH ACTUAL I.D. OF THE TIE–CHORD PIPES.
3. TYPE 2 FIELD SPLICE REQUIRES SHORING APPROVED BY ENGINEER TO ENSURE DEFLECTIONS AND STRESS ARE CONTROLLED.
4. TIE–CHORD BEND RADII SHALL ACCOUNT FOR INNER AND OUTER GRADE.
5. ALL SPLICES ARE INTENDED TO BE PERPENDICULAR TO PIPE CENTERLINE.

CITY OF KIRKLAND
DEPARTMENT OF PUBLIC WORKS
123 FIFTH AVENUE KIRKLAND, WA 98033
(425) 587-3800 www.kirklandwa.gov

NO.	DATE	BY	APPR.	REVISION
0	2019/12/06	CHJS	MWBM	ISSUE FOR BID

MATTHEW D. BAUGHMAN — STATE OF WASHINGTON — STRUCTURAL ENGINEER — PROFESSIONAL ENGINEER

COWI

APPROVED BY:

DATE:

SCVA 2019/12/06 — DESIGNED BY / DATE
CHJS 2019/12/06 — DRAWN BY / DATE
MWBM 2019/12/06 — CHECKED BY / DATE

CITY OF KIRKLAND
TOTEM LAKE CONNECTION

SUPERSTRUCTURE HANGER, ARCH, AND TIE–CHORD SPLICE DETAILS

SHEET: TLC–S–137
SCALE: AS SHOWN
FILENAME: A088367–S–137.dwg

File: D:\Projectwise\COWI\d0301252\A088367-S-137.dwg Save Date: Nov 26, 2019 1:22 PM Saved By: CHJS

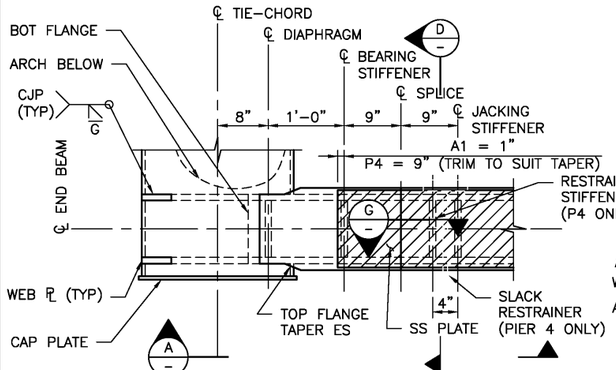

TYPE 1 – END BEAM PLAN

SCALE: 1" = 1'-0"
(SYMMETRICAL ABOUT CENTERLINE OF BRIDGE.
DETAIL AT A1 SHOWN, P4 SIMILAR)

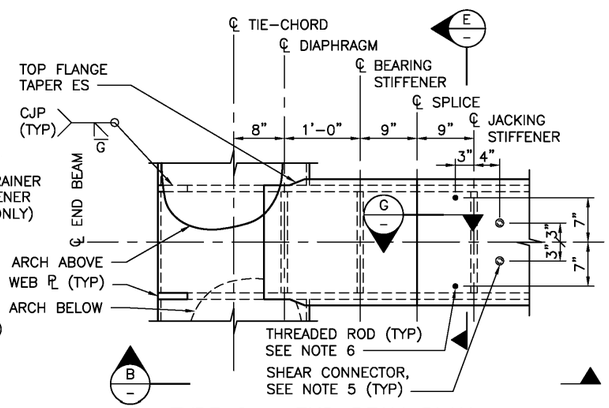

TYPE 2 – END BEAM PLAN

SCALE: 1" = 1'-0"
(SYMMETRICAL ABOUT CENTERLINE OF BRIDGE.
DETAIL AT P2, P3 & P5)

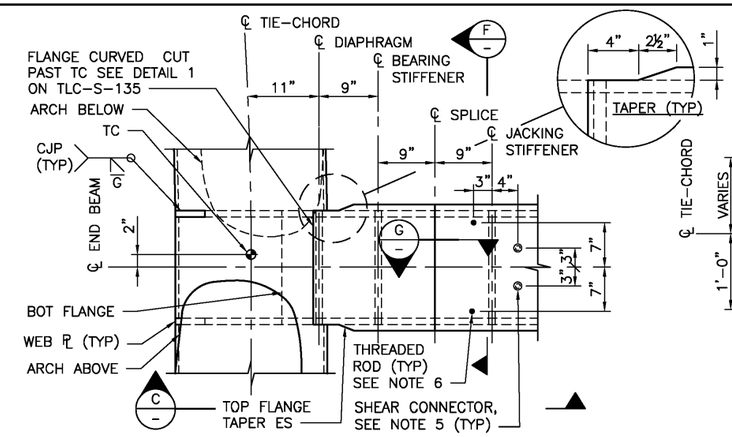

TYPE 3 – END BEAM PLAN

SCALE: 1" = 1'-0"
(DETAIL AT P6)

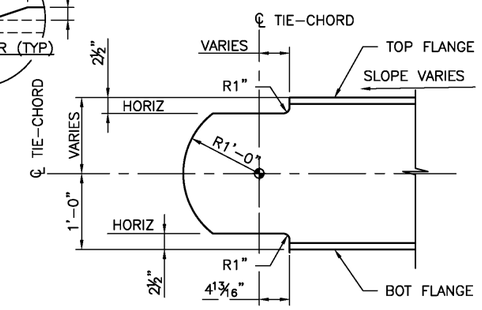

WEB PLATE DETAIL 1

SCALE: 1" = 1'-0"

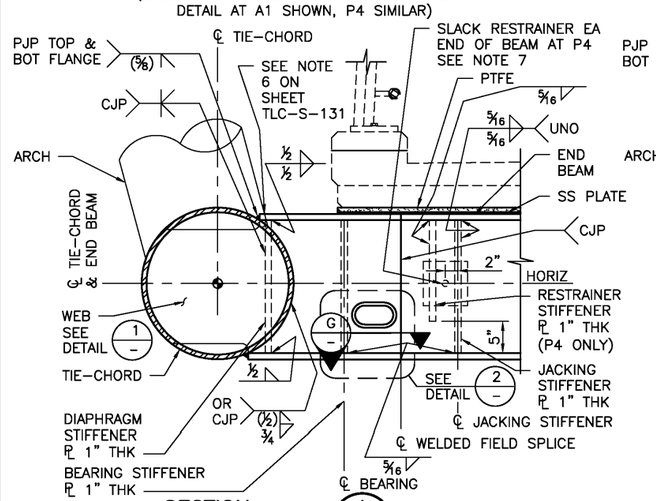

SECTION A

SCALE: 1" = 1'-0"
(SYMMETRICAL ABOUT CENTERLINE OF BRIDGE)

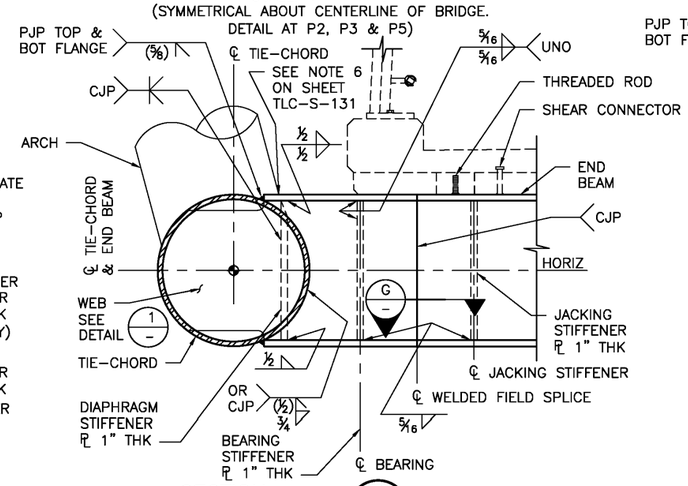

SECTION B

SCALE: 1" = 1'-0"
(SYMMETRICAL ABOUT CENTERLINE OF BRIDGE)

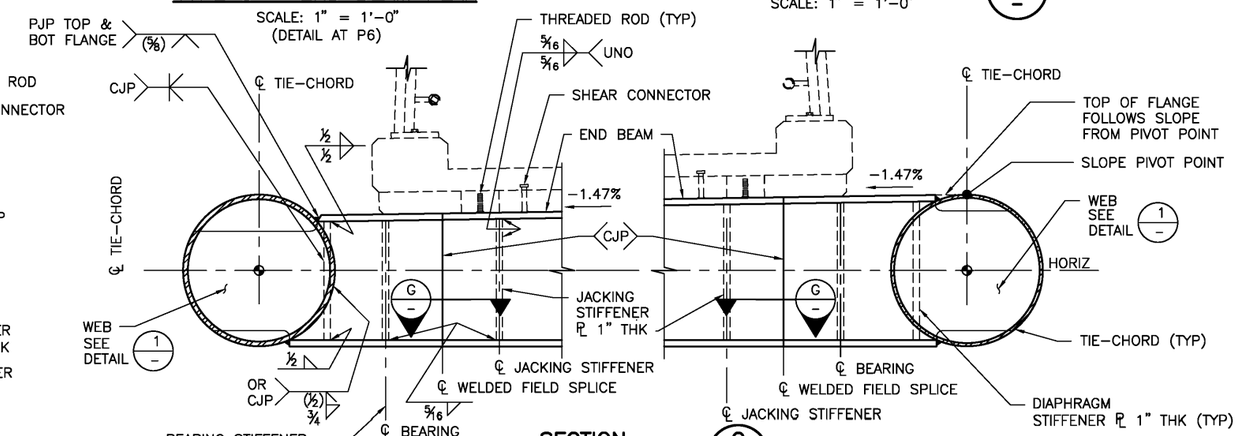

SECTION C

SCALE: 1" = 1'-0"

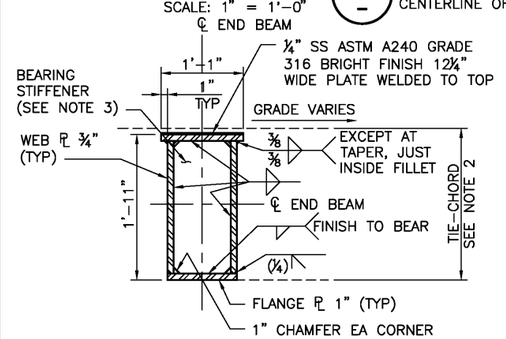

SECTION D

SCALE: 1" = 1'-0"

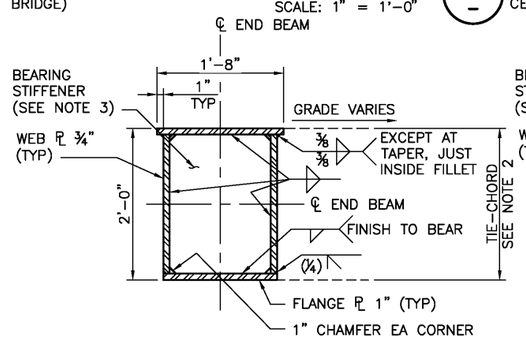

SECTION E

SCALE: 1" = 1'-0"

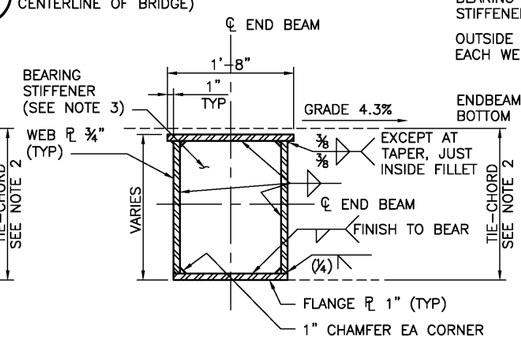

SECTION F

SCALE: 1" = 1'-0"

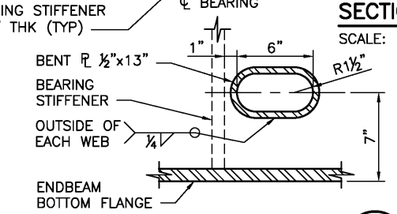

DETAIL 2

SCALE: 2" = 1'-0"
(CONDUIT SLEEVE AT A1 ONLY)

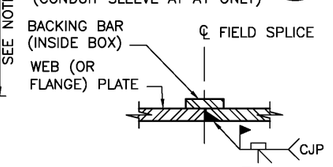

SECTION G

SCALE: 2" = 1'-0"

NOTES:

1. FOR GENERAL STRUCTURAL NOTES SEE DWG TLC-S-101.
2. END BEAMS ARE SQUARE WITH TIE-CHORD PIPE. TOP FLANGE FOLLOWS GRADE.
3. BEARING, JACKING AND DIAPHRAGM STIFFENERS USE COMMON DETAILING, EXCEPT WELD SIZES.
4. END BEAMS SHALL USE HIGH PERFORMANCE STEEL (HPS).
5. SHEAR CONNECTORS SHALL BE PLACED IN PAIRS (25 COUNT) AT 6" SPACING O.C. WITH MIDDLE PAIR COINCIDENT WITH BRIDGE CENTERLINE.
6. THREADED ROD ¾"ø x 3" WELDED TO BEAM 6'-7" FROM BRIDGE CENTERLINE FOR SECURING PC PANEL.
7. SLACK RESTRAINERS CONNECT SPANS 3 AND 4 AT PIER P4 FOR CONTROL OF SEISMIC DISPLACEMENTS AND SHALL BE COMPRISED OF GALVANIZED 1⅜"ø PT BAR GRADE 150 WITHIN 2¼" DIA HOLES IN END BEAM WEBS C/W MANUFACTURER NUTS AND SQUARE PLATES (1¾"x7"x7" MIN.) SET WITH 3" OF ALLOWED DISPLACEMENT BEFORE ENGAGEMENT. BARS SHALL BE CENTERED IN OUTER WEB BEAM HOLES WITH PLASTIC CENTRALIZERS.

CITY OF KIRKLAND
DEPARTMENT OF PUBLIC WORKS
123 FIFTH AVENUE KIRKLAND, WA 98033
(425) 587-3800 www.kirklandwa.gov

NO.	DATE	BY	APPR.	REVISION
0	2019/12/06	CHJS	MWBM	ISSUE FOR BID

MATTHEW D. BACHMAN — STATE OF WASHINGTON — STRUCTURAL ENGINEER — PROFESSIONAL ENGINEER

COWI

APPROVED BY:

DATE:

SCVA DESIGNED BY:	2019/12/06 DATE
CHJS DRAWN BY:	2019/12/06 DATE
MWBM CHECKED BY:	2019/12/06 DATE

CITY OF KIRKLAND
TOTEM LAKE CONNECTION

SUPERSTRUCTURE
END BEAM DETAILS – SHEET 1

SHEET: TLC-S-138
SCALE: AS SHOWN
FILENAME: A088367-S-138.dwg

File: D:\Projectwise\COWI\d0301252\A088367-S-138.dwg Save Date: Nov 26, 2019 1:22 PM Saved By: CHJS

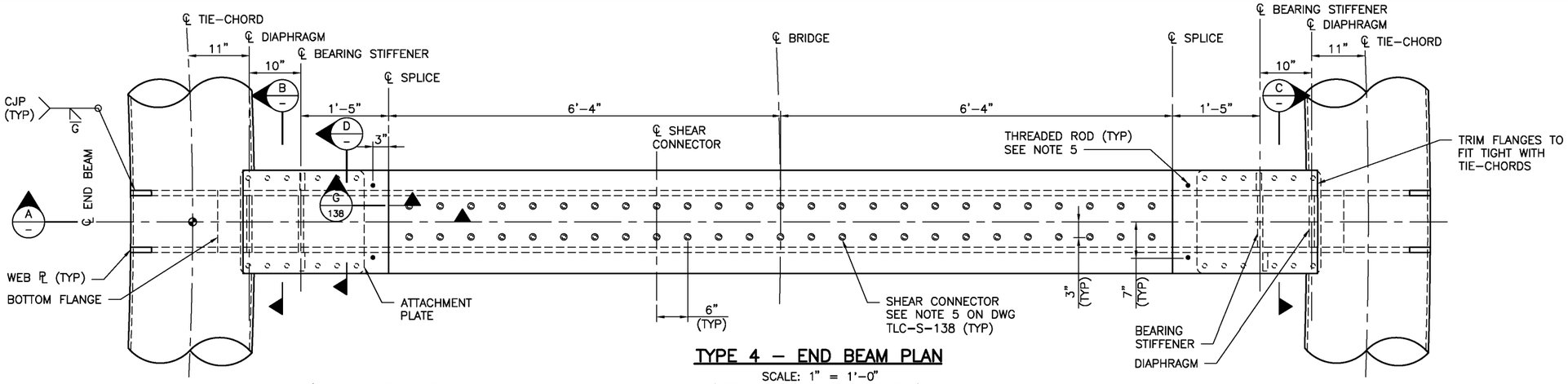

TYPE 4 – END BEAM PLAN

SCALE: 1" = 1'–0"
(DETAIL AT P7, P8, P10 AND P11)

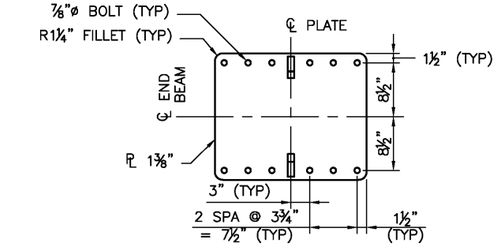

ATTACHMENT PLATE PLAN

SCALE: 1" = 1'–0"

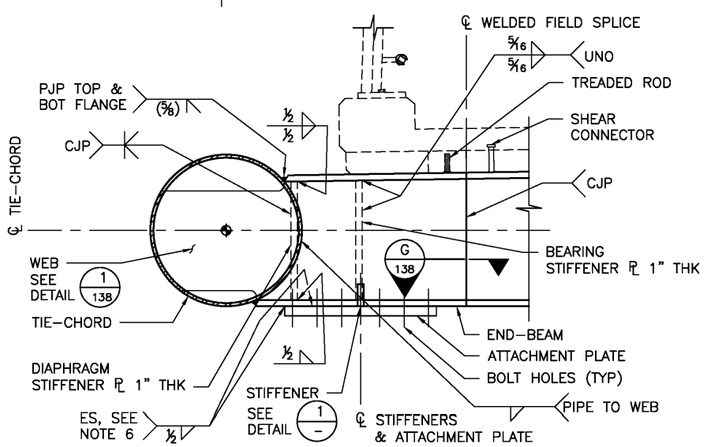

SECTION A

SCALE: 1" = 1'–0"

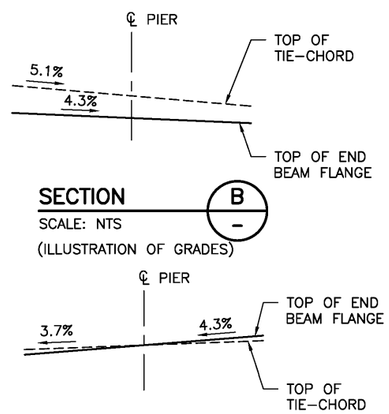

SECTION B

SCALE: NTS
(ILLUSTRATION OF GRADES)

SECTION C

SCALE: NTS
(ILLUSTRATION OF GRADES)

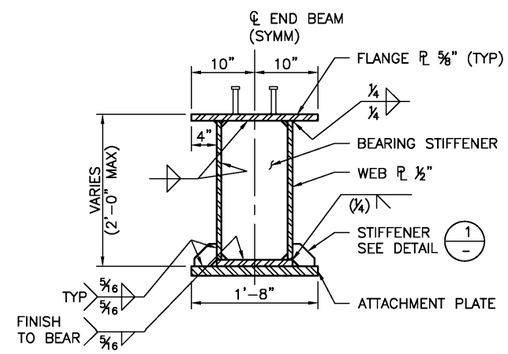

SECTION D

SCALE: 1" = 1'–0"

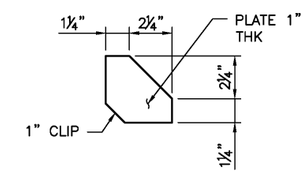

DETAIL 1

SCALE: 3" = 1'–0"

NOTES:

1. FOR GENERAL STRUCTURAL NOTES SEE DWG TLC–S–101.
2. END BEAM END SECTIONS ARE SLIGHTLY SKEWED WITH TIE–CHORD PIPES DUE TO DIFFERING LONGITUDINAL GRADE OF INNER AND OUTER RINGS.
3. BEARING AND DIAPHRAGM STIFFENERS USE COMMON DETAILING, EXCEPT WELD SIZES.
4. END BEAMS SHALL USE HIGH PERFORMANCE STEEL (HPS).
5. THREADED ROD ¾"øx3" WELDED TO BEAM 6'–7" FROM BRIDGE CENTERLINE FOR SECURING PC PANEL.
6. STOP ATTACHMENT PLATE WELDS ½" FROM EDGES OF SHORTER PLATE.

CITY OF KIRKLAND
DEPARTMENT OF PUBLIC WORKS
123 FIFTH AVENUE KIRKLAND, WA 98033
(425) 587-3800 www.kirklandwa.gov

NO.	DATE	BY	APPR.	REVISION
0	2019/12/06	CHJS	MWBM	ISSUE FOR BID

MATTHEW D. BAUGHMAN — STATE OF WASHINGTON — STRUCTURAL ENGINEER — PROFESSIONAL ENGINEER

COWI

APPROVED BY:

DATE:

SCVA DESIGNED BY:	2019/12/06 DATE
CHJS DRAWN BY:	2019/12/06 DATE
MWBM CHECKED BY:	2019/12/06 DATE

CITY OF KIRKLAND
TOTEM LAKE CONNECTION

SUPERSTRUCTURE
END BEAM DETAILS – SHEET 2

SHEET: TLC–S–139
SCALE: AS SHOWN
FILENAME: A088367–S–139.dwg

File: D:\Projectwise\COWI\d0301252\A088367–S–139.dwg Save Date: Nov 26, 2019 1:22 PM Saved By: CHJS

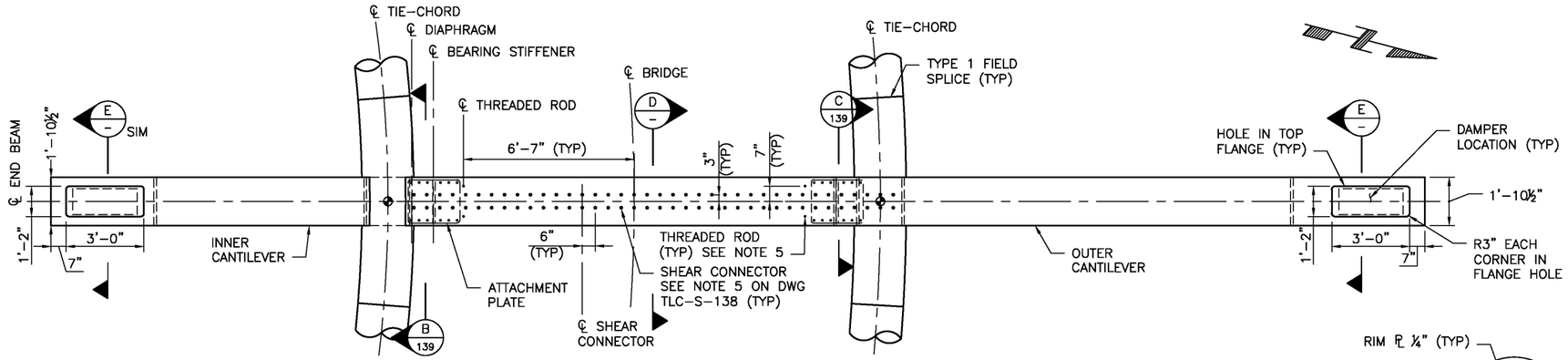

TYPE 5 – END BEAM PLAN

SCALE: ⅜" = 1'-0"

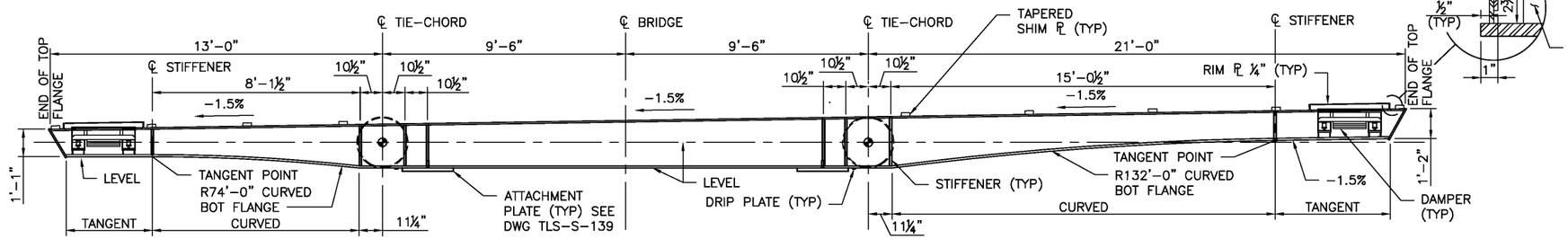

TYPE 5 – END BEAM OVERLOOK ELEVATION AT CENTERLINE

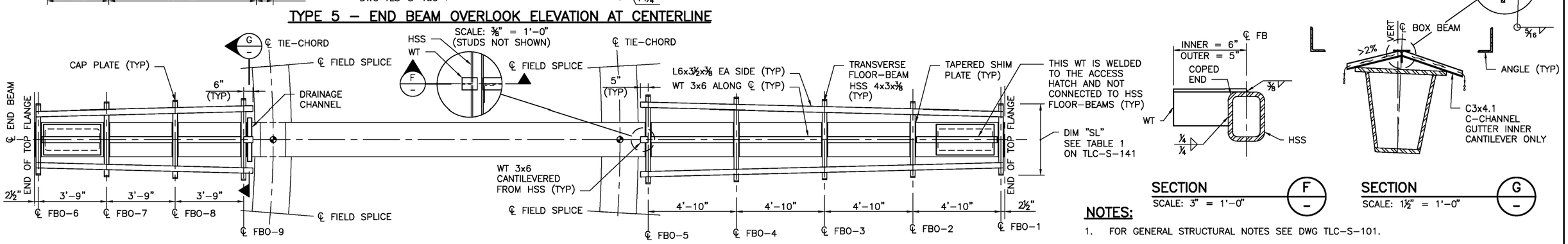

TYPE 5 – END BEAM OVERLOOK FRAMING

SCALE: ⅜" = 1'-0"
(RAILING POSTS & STUDS NOT SHOWN)

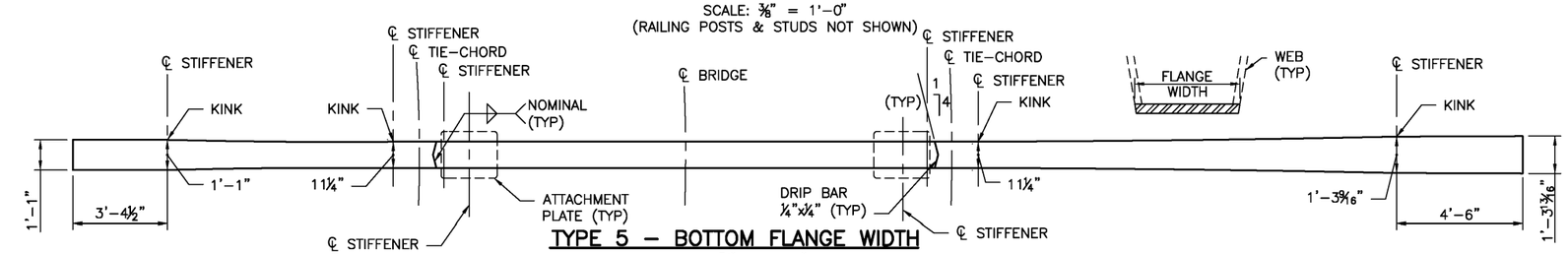

TYPE 5 – BOTTOM FLANGE WIDTH

SCALE: ⅜" = 1'-0"

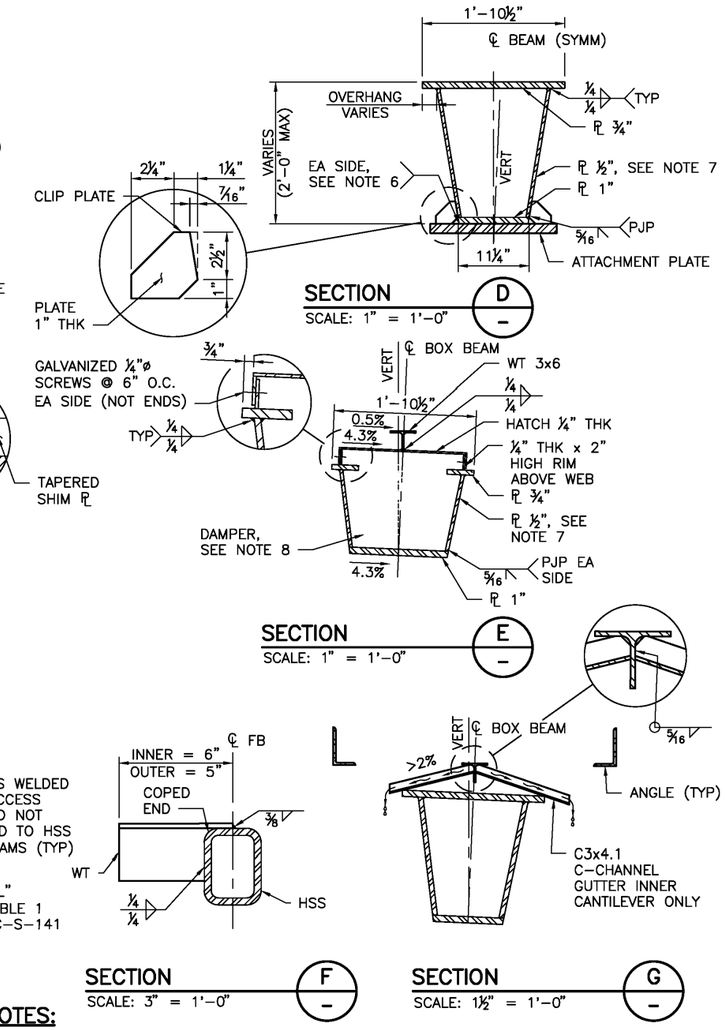

NOTES:

1. FOR GENERAL STRUCTURAL NOTES SEE DWG TLC-S-101.
2. END BEAMS ARE END SECTIONS SLIGHTLY SKEWED WITH TIE-CHORD PIPE DUE TO DIFFERING LONGITUDINAL GRADE OF INNER AND OUTER RINGS.
3. BEARING AND DIAPHRAGM STIFFENERS USE COMMON DETAILING.
4. END BEAMS SHALL USE HIGH PERFORMANCE STEEL (HPS).
5. THREADED ROD ¾"ø x 3" WELDED TO BEAM 6'-7" FROM BRIDGE CENTERLINE FOR SECURING PC PANEL.
6. STOP ATTACHMENT PLATE WELDS ½" FROM EDGES OF SHORTER PLATE. SEE TLC-S-139 FOR WELD DETAILS.
7. WEB ANGLE IS CONSTANT AT 1:6 RELATIVE TO CENTERLINE OF BOX.
8. INNER & OUTER DAMPERS ARE ASSUMED TO BE 1125-LBS EA WITH REF. DIMENSIONS OF 12"Wx11"Hx30"L. DAMPER DESIGN, DETAILING, AND ACCESS HOLE/LID TO BE FINALIZED BY DAMPER SUPPLIER.

CITY OF KIRKLAND
DEPARTMENT OF PUBLIC WORKS
123 FIFTH AVENUE KIRKLAND, WA 98033
(425) 587-3800 www.kirklandwa.gov

NO.	DATE	BY	APPR.	REVISION
0	2019/12/06	CHJS	MWBM	ISSUE FOR BID

MATTHEW D. BAUGHMAN, STATE OF WASHINGTON, STRUCTURAL ENGINEER, PROFESSIONAL ENGINEER

COWI

APPROVED BY:

DATE:

SCVA 2019/12/06 DESIGNED BY DATE
CHJS 2019/12/06 DRAWN BY DATE
MWBM 2019/12/06 CHECKED BY DATE

CITY OF KIRKLAND
TOTEM LAKE CONNECTION

SUPERSTRUCTURE
END BEAM DETAILS – SHEET 3

SHEET: TLC-S-140
SCALE: AS SHOWN
FILENAME: A088367-S-140.dwg

File: D:\Projectwise\COWI\d0301252\A088367-S-140.dwg Save Date: Nov 26, 2019 1:23 PM Saved By: CHJS

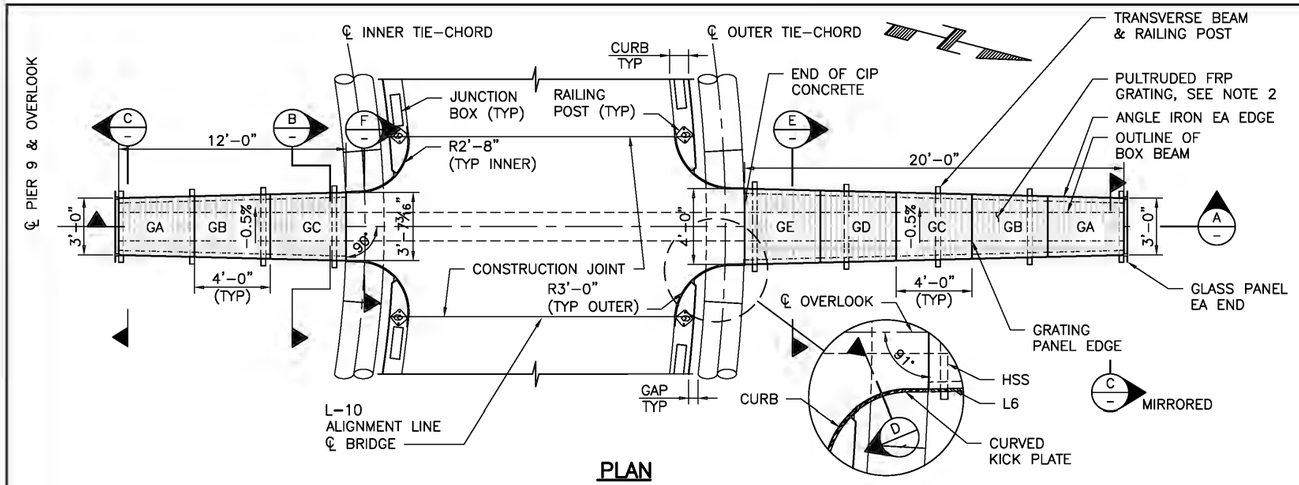

PLAN
SCALE: 1/4" = 1'-0"

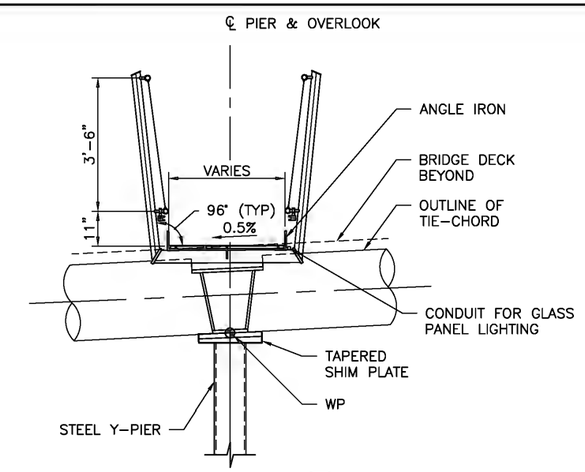

SECTION B
SCALE: 1/2" = 1'-0"

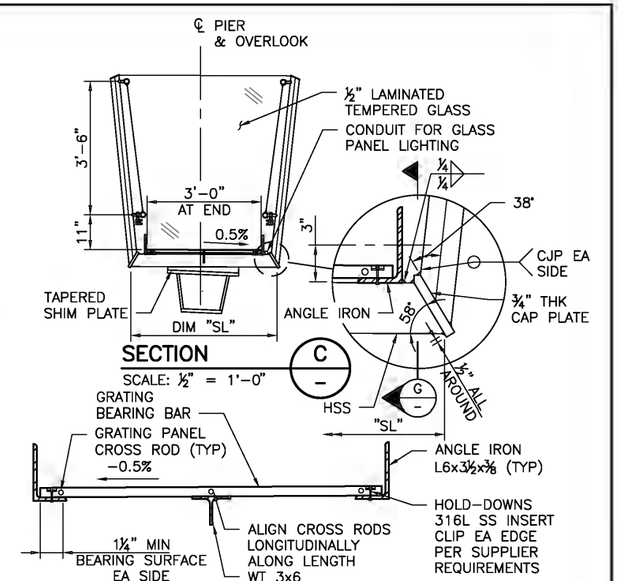

SECTION C
SCALE: 1/2" = 1'-0"

SECTION E
SCALE: 1 1/2" = 1'-0"

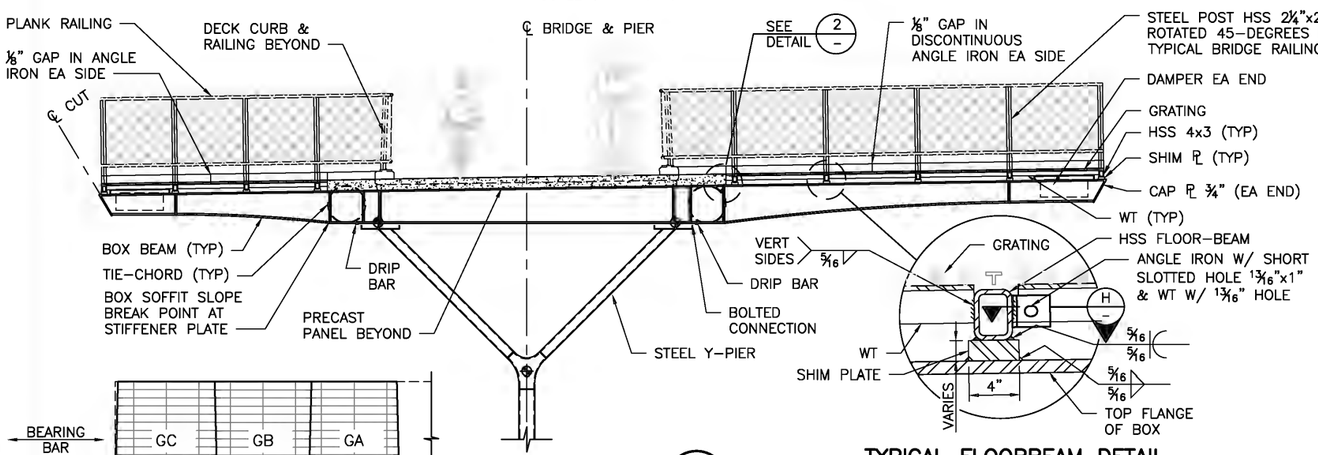

SECTION A
SCALE: 1/4" = 1'-0"

TYPICAL FLOORBEAM DETAIL
SCALE: NTS

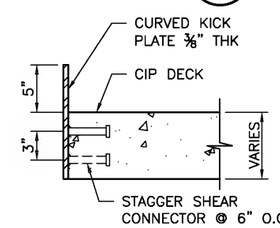

SECTION D
SCALE: 1 1/2" = 1'-0"

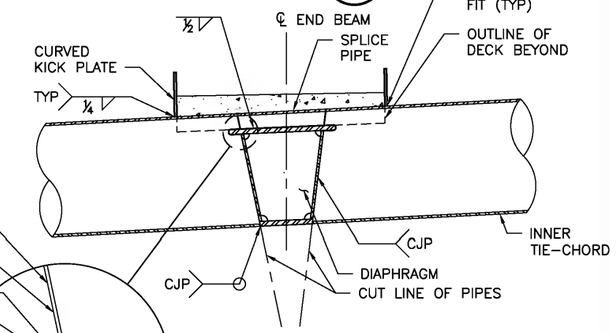

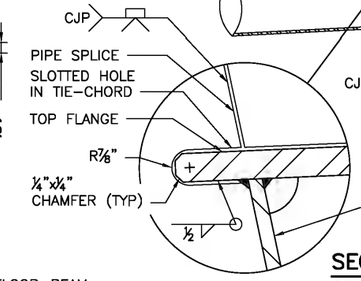

SECTION F
SCALE: 3/4" = 1'-0"

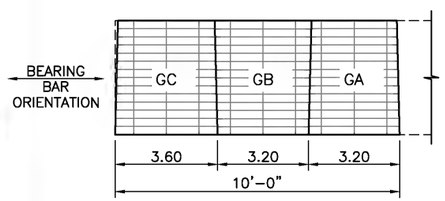

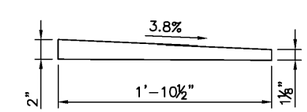

SHIM PLATE THICKNESS
SCALE: 1 1/2" = 1'-0"

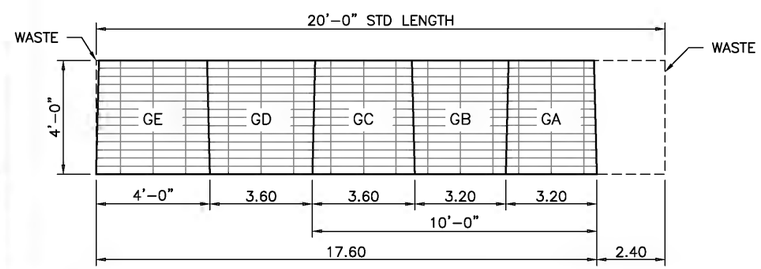

GRATING LAYOUT PLAN
SCALE: 3/8" = 1'-0"

TLC-S-141 TABLE 1: FLOOR-BEAM LENGTH	
FLOOR-BEAM	SOFFIT LENGTH "SL"
FBO-1	3'-9 13/16"
FBO-2	4'-0 3/4"
FBO-3	4'-3 5/8"
FBO-4	4'-6 1/2"
FBO-5	4'-9 7/16"
FBO-6	4'-4 9/16"
FBO-7	4'-2 5/16"
FBO-8	4'-0 1/16"
FBO-9	3'-9 13/16

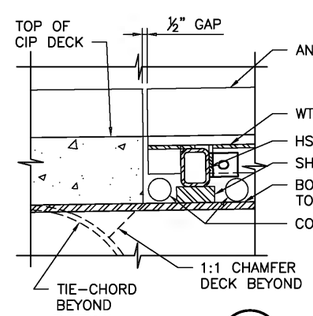

DETAIL 2
SCALE: 1 1/2" = 1'-0"

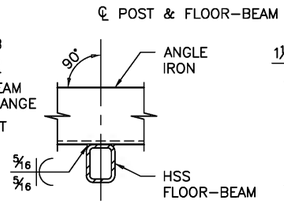

SECTION G
SCALE: 1 1/2" = 1'-0"

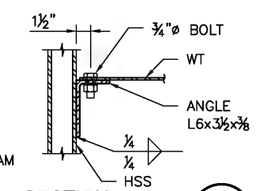

SECTION H
SCALE: 3/4" = 1'-0"

NOTES:

1. FOR GENERAL STRUCTURAL NOTES SEE DWG. TLS-S-101.
2. PULTRUDED FRP GRATING SHALL BE DURADEK SERIES I-6500 SPF POLYESTER RESIN GRAY, 1" BEARING BARS, MEDIUM GRIT SURFACE 60% OPEN AREA, 60" WIDTH WITH FIRE RETARDER OR APPROVED EQUIVALENT.
3. FOR DETAILS OF FINISHES SEE TLC-A-157.

CITY OF KIRKLAND
DEPARTMENT OF PUBLIC WORKS
123 FIFTH AVENUE KIRKLAND, WA 98033
(425) 587-3800 www.kirklandwa.gov

NO.	DATE	BY	APPR.	REVISION
0	2019/12/06	CHJS	MWBM	ISSUE FOR BID

MATTHEW D. BAUGHMAN — STATE OF WASHINGTON — STRUCTURAL ENGINEER — PROFESSIONAL ENGINEER

COWI

APPROVED BY:

DATE:

SCVA 2019/12/06 DESIGNED BY DATE
CHJS 2019/12/06 DRAWN BY DATE
MWBM 2019/12/06 CHECKED BY DATE

CITY OF KIRKLAND
TOTEM LAKE CONNECTION

SUPERSTRUCTURE
END BEAM DETAILS – OVERLOOK

SHEET: TLC-S-141
SCALE: AS SHOWN
FILENAME: A088367-S-141.dwg

File: D:\Projectwise\COWI\v030\1252\A088367-S-141.dwg Save Date: Nov 26, 2019 1:22 PM Saved By: CHJS

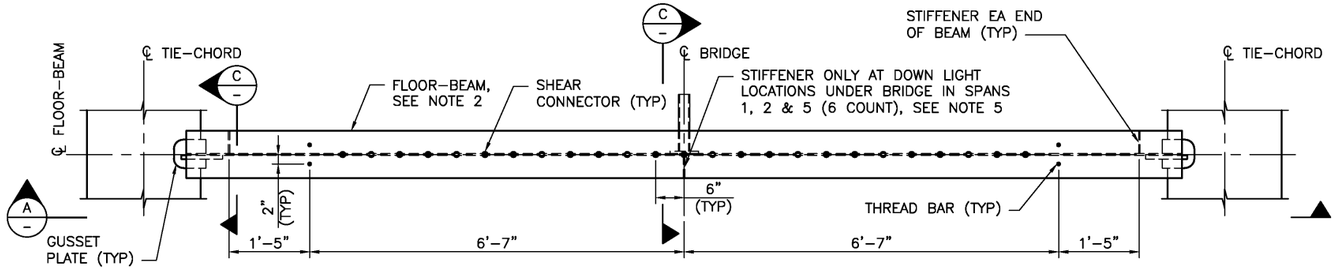

FLOOR-BEAM PLAN

SCALE: ¾" = 1'-0"

TLC-S-142 TABLE 1: FLOOR-BEAM LENGTH		
FLOOR-BEAM TYPE	SLOPE	'LB'
FB1	LEVEL	17'-6"
FB2	-0.3%	TBC BY DETAILER
FB3	-0.6%	TBC BY DETAILER
FB4	-0.9%	TBC BY DETAILER
FB5	-1.2%	TBC BY DETAILER
FB6	-1.5%	17'-3⅝"

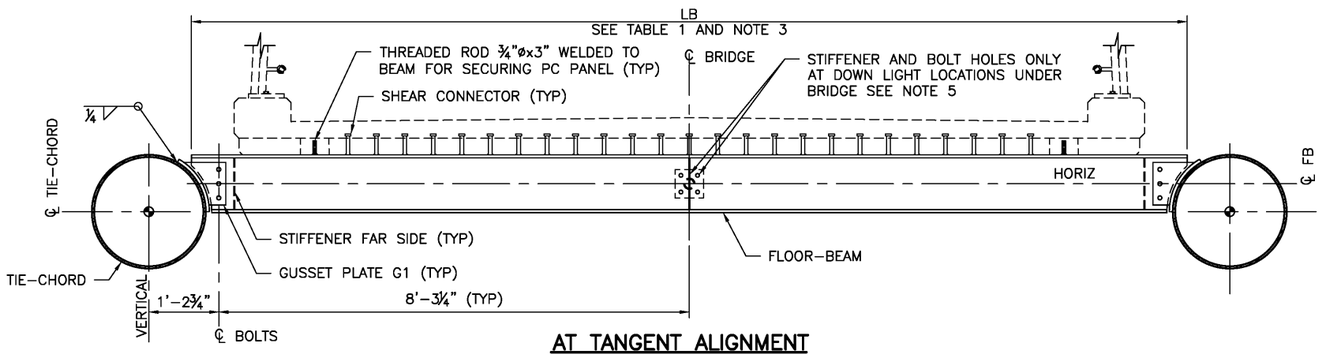

AT TANGENT ALIGNMENT

(FB1)

SIMILAR AT SUPERELEVATION TRANSITION – SEE TABLE 1

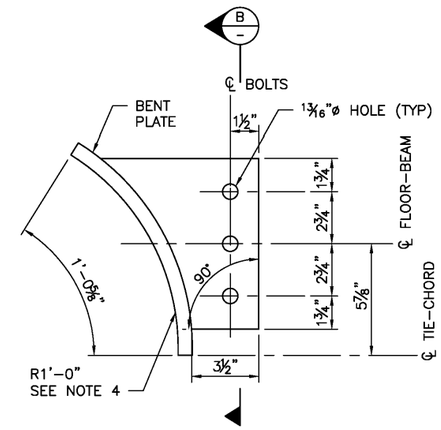

GUSSET PLATE DETAIL G1

SCALE: 3" = 1'-0"

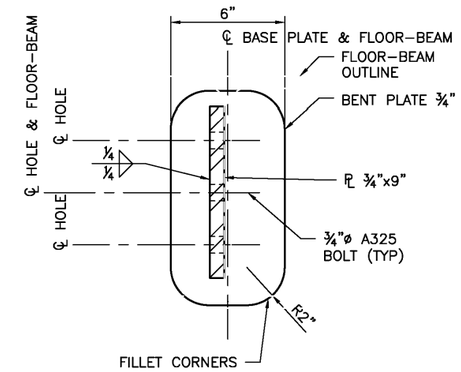

SECTION B

SCALE: 3" = 1'-0"

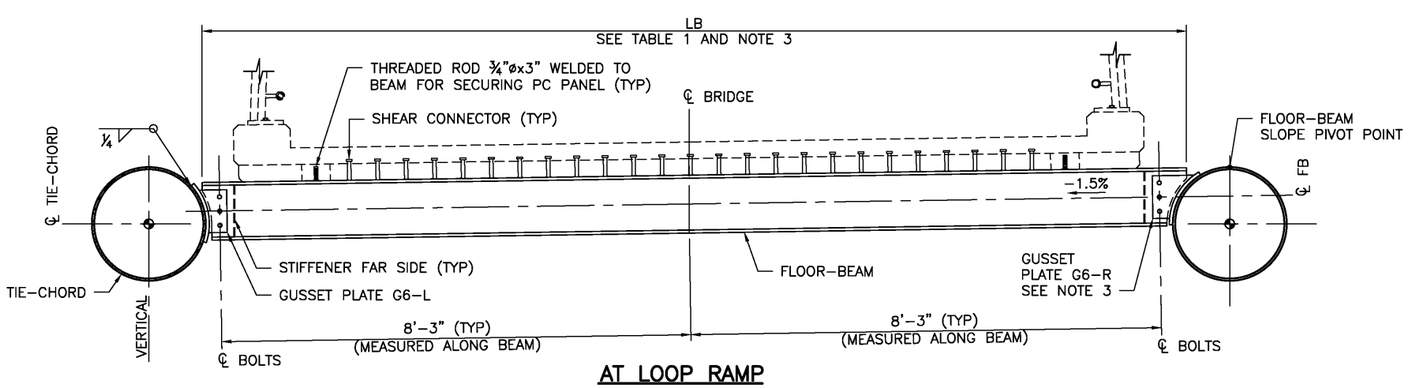

AT LOOP RAMP

(FB6)

SECTION A

SCALE: ¾" = 1'-0"

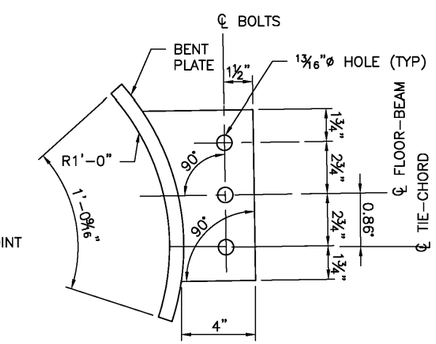

GUSSET PLATE DETAIL G6-L

SCALE: 3" = 1'-0"

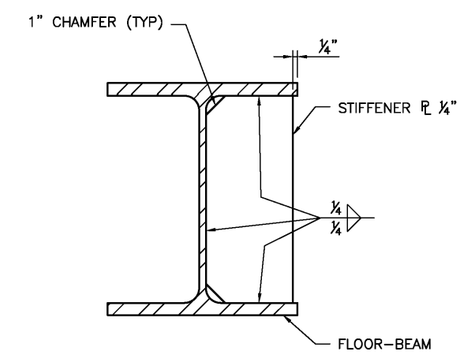

SECTION C

SCALE: 3" = 1'-0"

NOTES:

1. FOR GENERAL STRUCTURAL NOTES SEE DWG TLC-S-101.
2. FLOOR-BEAMS ARE W12x58.
3. FLOOR-BEAM LENGTHS, END CUT GEOMETRY AND GUSSET PLATE CONNECTIONS VARY PER THE RESPECTIVE SLOPE OF THE FLOOR-BEAM TYPE AS SHOWN IN TABLE 1.
4. FABRICATOR TO VERIFY RADIUS OF BENT PLATE WORKS WITH ACTUAL O.D. OF THE TIE-CHORD PIPES.
5. FOR DETAILS OF DOWN LIGHTS UNDER BRIDGE SEE ELECTRICAL DWGS.

CITY OF KIRKLAND
DEPARTMENT OF PUBLIC WORKS
123 FIFTH AVENUE KIRKLAND, WA 98033
(425) 587-3800 www.kirklandwa.gov

NO.	DATE	BY	APPR.	REVISION
0	2019/12/06	CHJS	MWBM	ISSUE FOR BID

MATTHEW D. BAUGHMAN — STATE OF WASHINGTON — STRUCTURAL ENGINEER — PROFESSIONAL ENGINEER

COWI

APPROVED BY:

DATE:

SCVA 2019/12/06 DESIGNED BY DATE
CHJS 2019/12/06 DRAWN BY DATE
MWBM 2019/12/06 CHECKED BY DATE

CITY OF KIRKLAND
TOTEM LAKE CONNECTION

SUPERSTRUCTURE FLOOR BEAM DETAILS

SHEET: TLC-S-142
SCALE: AS SHOWN
FILENAME: A088367-S-142.dwg

File: D:\Projectwise\COWI\d0301252\A088367-S-142.dwg Save Date: Nov 26, 2019 1:22 PM Saved By: CHJS

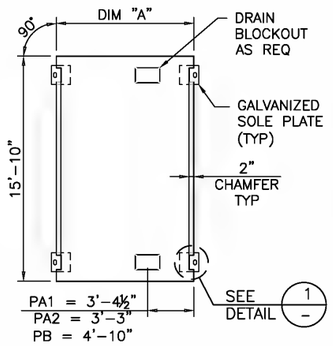

PRECAST PANEL PA, PB & PF

NTS

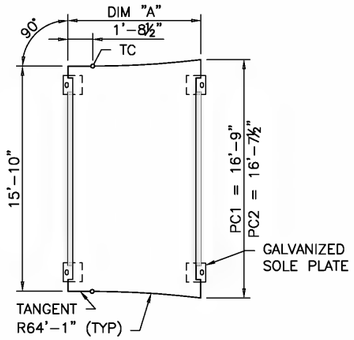

PRECAST PANEL PC

NTS

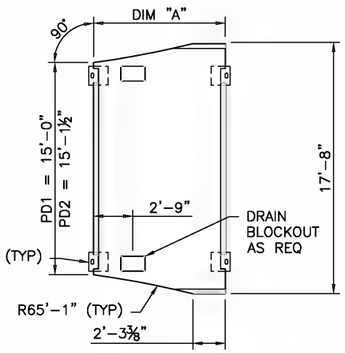

PRECAST PANEL PD

NTS

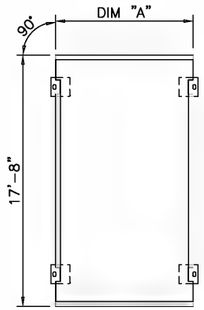

PRECAST PANEL PE

NTS

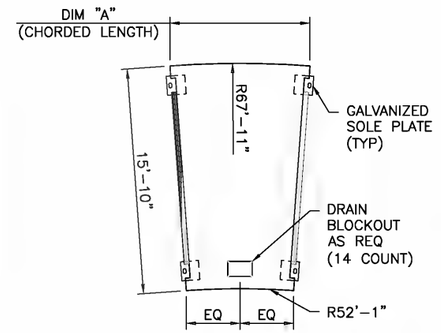

PRECAST PANEL PG, PH, PI & PJ

NTS

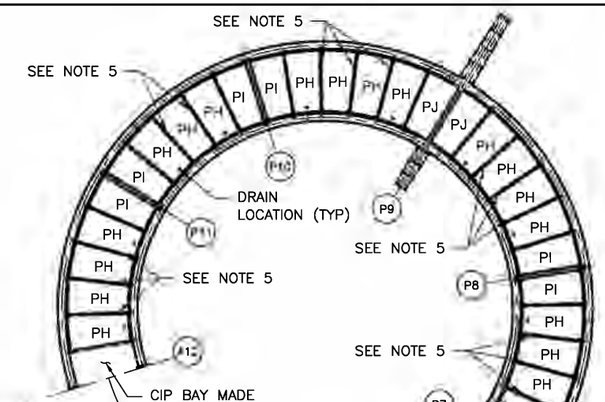

NOTE:
SOLE PLATES NOT REQUIRED AT A1 AND P4 ENDS OF TYPE PA PANELS

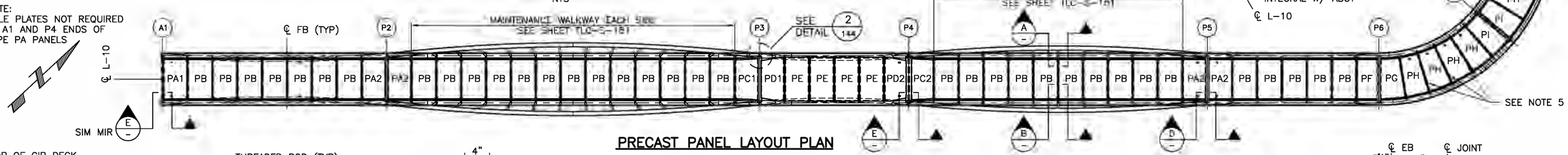

PRECAST PANEL LAYOUT PLAN

SCALE: 1:20

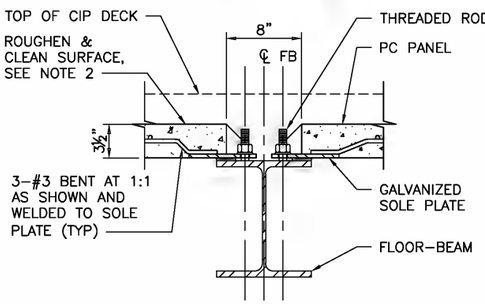

SECTION A

SCALE: 1½" = 1'-0"
(TYP AT ALL FLOOR-BEAMS, UNO)
(SIM AT END BEAMS)

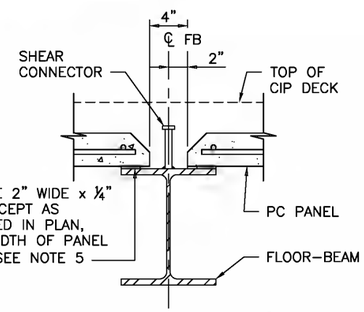

SECTION B

SCALE: 1½" = 1'-0"
(TYP AT ALL FLOOR-BEAMS, UNO)

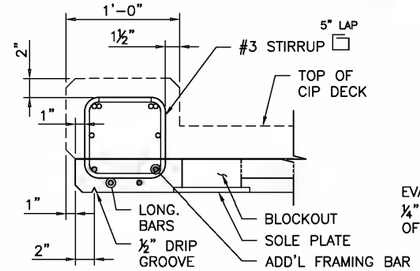

SECTION C

SCALE: 1½" = 1'-0"
(PC, PD & PE VARY)

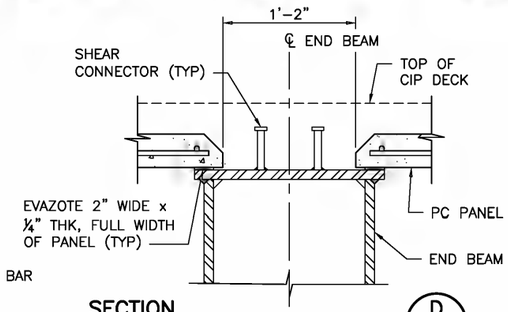

SECTION D

SCALE: 1½" = 1'-0"
(TYP AT P2, P3, P5 & P6)
(SIM AT P7-P11)

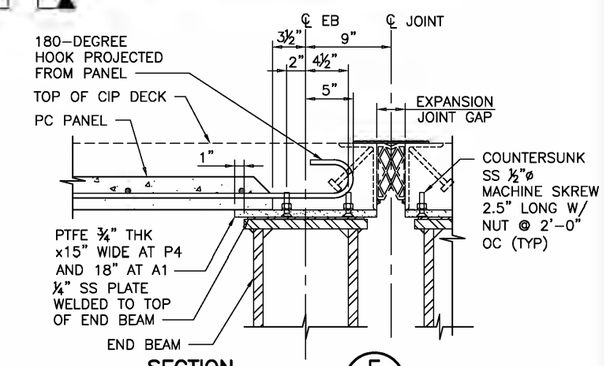

SECTION E

SCALE: 1½" = 1'-0"
(P4 SHOWN, A1 SIMILAR)

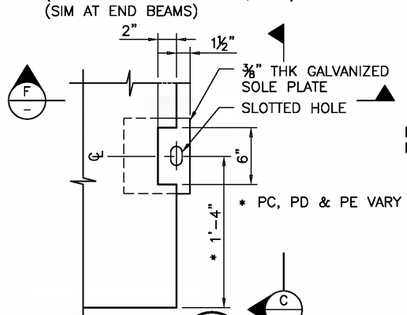

DETAIL 1

SCALE: 1½" = 1'-0"
(TYP ALL PANELS, EXCEPT AS NOTED)

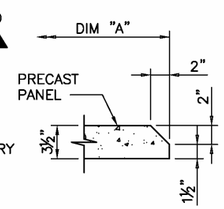

SECTION F

SCALE: 1½" = 1'-0"

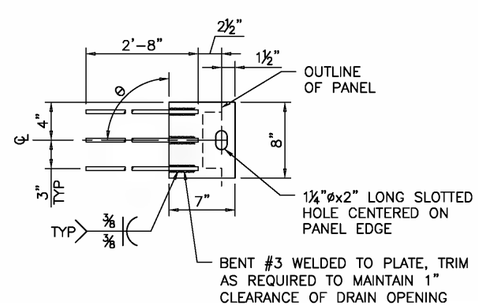

SOLE PLATE DETAIL

SCALE: 1½" = 1'-0"

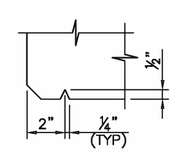

DRIP GROOVE DETAIL

SCALE: 3" = 1'-0"

TLC-S-143 TABLE 1: PANEL DIMENSIONS

PANEL	DIM "A"	COUNT	θ
PA1	9'-6½"	1	90
PA2	9'-3"	4	90
PB	9'-8"	35	90
PC1	9'-3"	1	90
PC2	8'-9½"	1	90
PD1	9'-3"	1	90
PD2	8'-9½"	1	90
PE	9'-8"	4	90
PF	8'-3"	1	90
PG	10'-0¼"	1	85.7
PH	9'-4½"	23	85.9
PI	8'-11½"	8	85.9
PJ	8'-11½"	2	85.9

NOTES:

1. FOR GENERAL STRUCTURAL NOTES SEE DRAWING TLC-S-101.
2. TOP OF PRECAST PANELS SHALL BE ROUGHENED AND CLEANED PER THE SPECIAL PROVISIONS.
3. COVER FROM SOFFIT SHALL BE 1", EXCEPT AT SOLE PLATE LOCATIONS.
4. CONTRACTOR SHALL BE RESPONSIBLE FOR DESIGN OF LIFTING CONNECTIONS AND MEANS AND METHODS PER THE SPECIAL PROVISIONS.
5. USE ⅝" THICK EVAZOTE HAUNCH AT LOOP RAMP FLOOR-BEAMS AS INDICATED IN PLAN.
6. NUTS ON THREADED RODS AT SOLE PLATES SHALL BE HAND TIGHTENED AFTER PANELS ARE ERECTED IN FINAL POSITION AND PRIOR TO PLACING ANY REBAR.

CITY OF KIRKLAND
DEPARTMENT OF PUBLIC WORKS
123 FIFTH AVENUE KIRKLAND, WA 98033
(425) 587-3800 www.kirklandwa.gov

NO.	DATE	BY	APPR.	REVISION
0	2019/12/06	CHJS	MWBM	ISSUE FOR BID

COWI

APPROVED BY:

DATE:

SCVA 2019/12/06 DESIGNED BY DATE
CHJS 2019/12/06 DRAWN BY DATE
MWBM 2019/12/06 CHECKED BY DATE

CITY OF KIRKLAND
TOTEM LAKE CONNECTION

SUPERSTRUCTURE
PRECAST PANEL LAYOUT PLAN

SHEET: TLC-S-143
SCALE: AS SHOWN
FILENAME: A088367-S-143.dwg

File: D:\Projectwise\COWI\d0301252\A088367-S-143.dwg Save Date: Nov 26, 2019 1:21 PM Saved By: CHJS

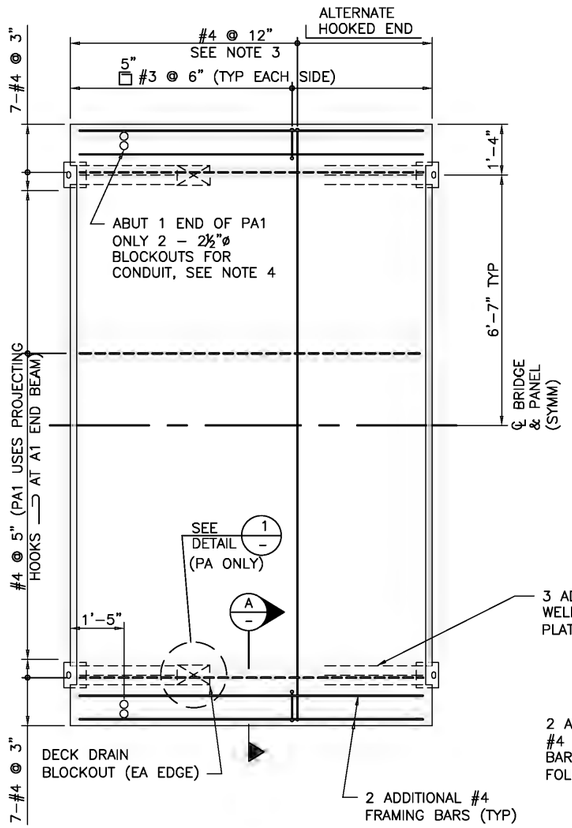

PRECAST PANELS PA, PB & PF REINFORCEMENT PLAN

SCALE: ½" = 1'-0"

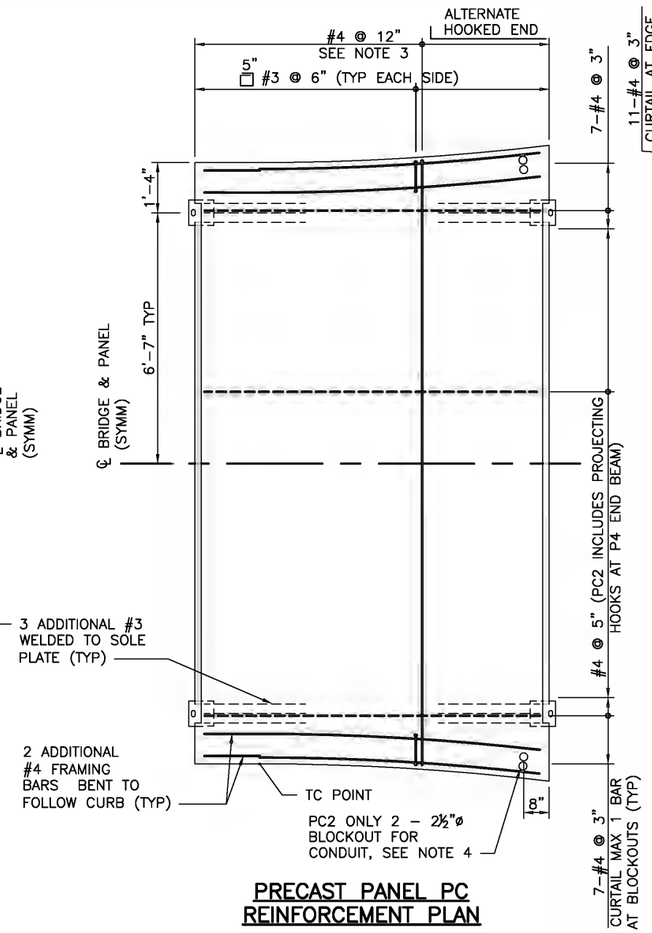

PRECAST PANEL PC REINFORCEMENT PLAN

SCALE: ½" = 1'-0"

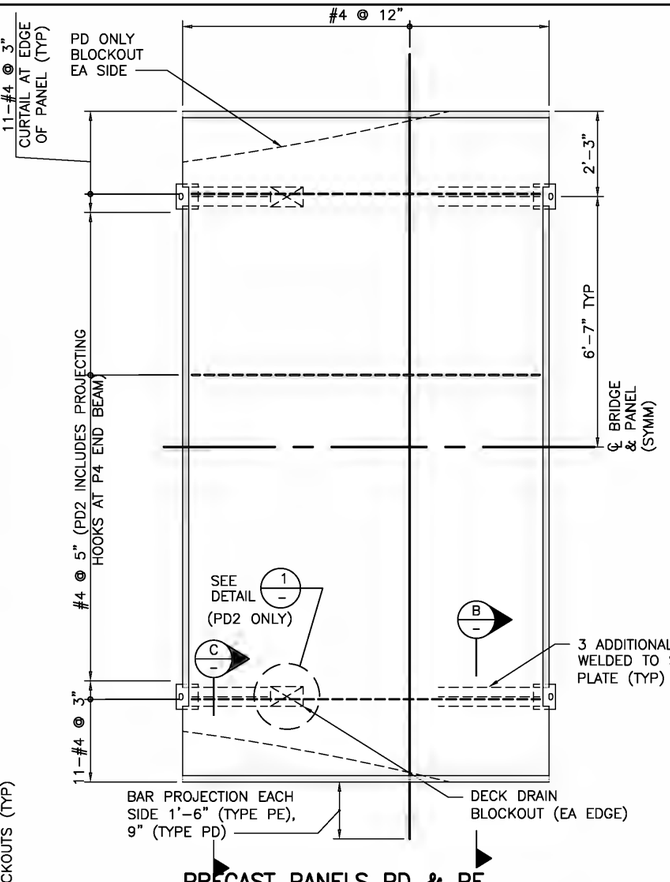

PRECAST PANELS PD & PE REINFORCEMENT PLAN

SCALE: ½" = 1'-0"

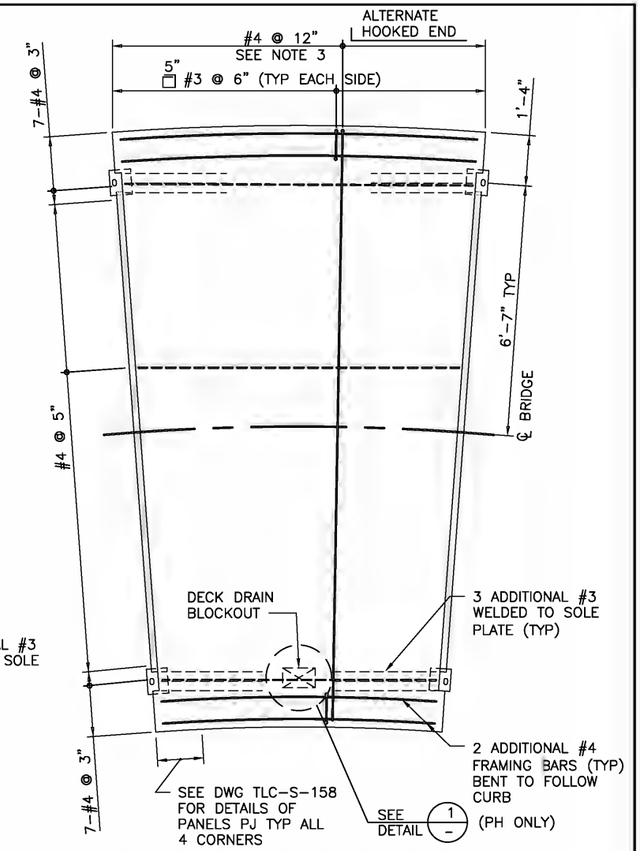

PRECAST PANELS PG, PH, PI & PJ REINFORCEMENT PLAN

SCALE: ½" = 1'-0"

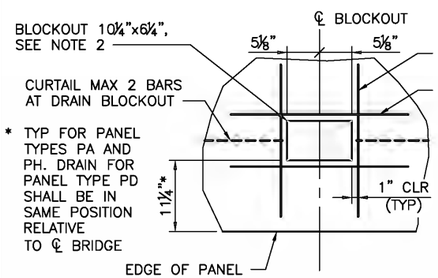

DETAIL 1

SCALE: 1" = 1'-0"

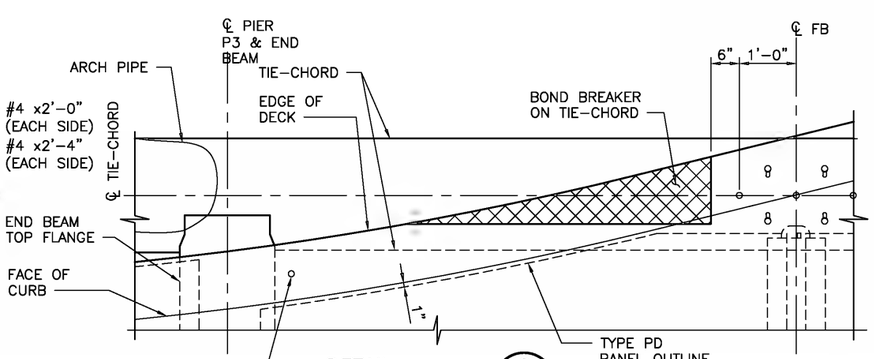

DETAIL 2 (143)

SCALE: ¾" = 1'-0"

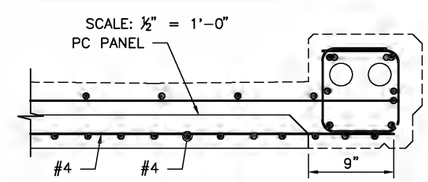

SECTION C

SCALE: 1½" = 1'-0"

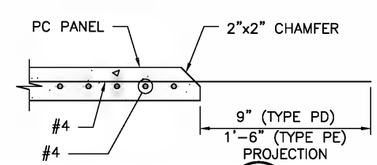

SECTION B

SCALE: 1½" = 1'-0"

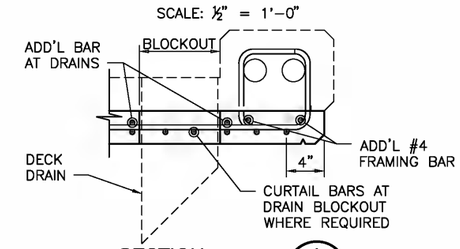

SECTION A

SCALE: 1½" = 1'-0"

NOTES:

1. FOR NOTES SEE DWG TLC-S-143.
2. PROVIDE DRAIN BLOCKOUTS AT DRAIN LOCATIONS AS INDICATED ON DWG TLC-S-143, WITH ADDITIONAL REINFORCEMENT AROUND OPENING PER DETAIL.
3. USE STIRRUP/TIE HOOK FOR PIN DIAMETER. TIE TRANSVERSE BARS TO STIRRUPS.
4. CENTER CONDUIT BLOCKOUTS BETWEEN CURB STIRRUPS WITH 1" MINIMUM CLEARANCE BETWEEN BLOCKOUTS. ORIENT BLOCKOUTS PERPENDICULAR TO CURB TO FACILITATE CONDUIT CONNECTION TO JUNCTION BOX. FILL ANNULUS BETWEEN CONDUIT AND BLOCKOUT WITH SEALANT PRIOR TO CIP DECK CONCRETE PLACEMENT.

CITY OF KIRKLAND
DEPARTMENT OF PUBLIC WORKS
123 FIFTH AVENUE KIRKLAND, WA 98033
(425) 587-3800 www.kirklandwa.gov

NO.	DATE	BY	APPR.	REVISION
0	2019/12/06	CHJS	MWBM	ISSUE FOR BID

MATTHEW D. BAUGHMAN — STATE OF WASHINGTON — STRUCTURAL ENGINEER — PROFESSIONAL ENGINEER

COWI

APPROVED BY:

DATE:

SCVA 2019/12/06 DESIGNED BY: DATE
CHJS 2019/12/06 DRAWN BY: DATE
MWBM 2019/12/06 CHECKED BY: DATE

CITY OF KIRKLAND
TOTEM LAKE CONNECTION

SUPERSTRUCTURE PRECAST PANEL REINFORCEMENT

SHEET: TLC-S-144
SCALE: AS SHOWN
FILENAME: A088367-S-144.dwg

File: D:\Projectwise\COWI\d0301252\A088367-S-144.dwg Save Date: Nov 26, 2019 1:22 PM Saved By: CHJS

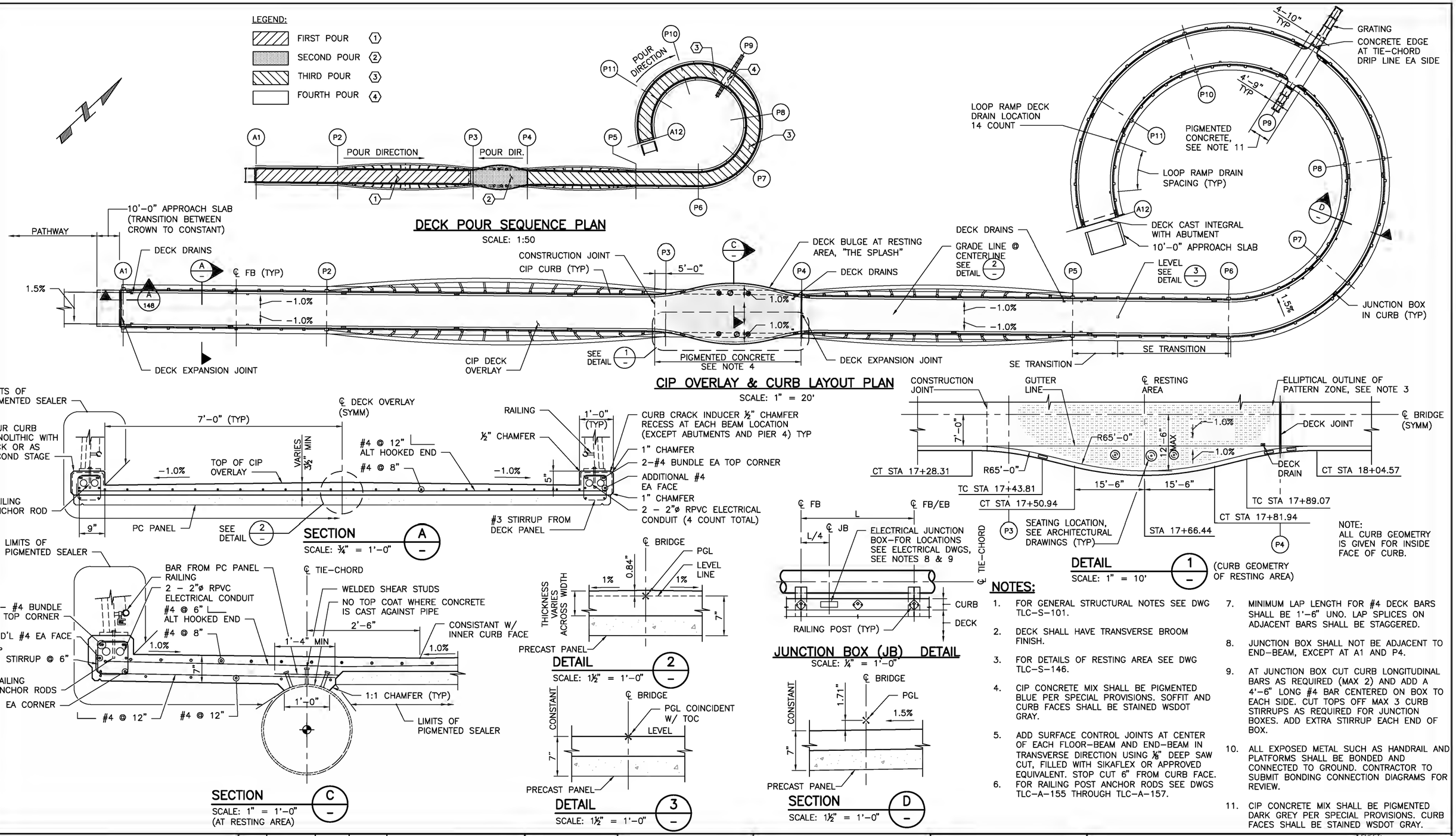

NOTES:

1. FOR GENERAL STRUCTURAL NOTES SEE DWG TLC-S-101.
2. DECK SHALL HAVE TRANSVERSE BROOM FINISH.
3. FOR DETAILS OF RESTING AREA SEE DWG TLC-S-146.
4. CIP CONCRETE MIX SHALL BE PIGMENTED BLUE PER SPECIAL PROVISIONS. SOFFIT AND CURB FACES SHALL BE STAINED WSDOT GRAY.
5. ADD SURFACE CONTROL JOINTS AT CENTER OF EACH FLOOR-BEAM AND END-BEAM IN TRANSVERSE DIRECTION USING ⅛" DEEP SAW CUT, FILLED WITH SIKAFLEX OR APPROVED EQUIVALENT. STOP CUT 6" FROM CURB FACE.
6. FOR RAILING POST ANCHOR RODS SEE DWGS TLC-A-155 THROUGH TLC-A-157.
7. MINIMUM LAP LENGTH FOR #4 DECK BARS SHALL BE 1'-6" UNO. LAP SPLICES ON ADJACENT BARS SHALL BE STAGGERED.
8. JUNCTION BOX SHALL NOT BE ADJACENT TO END-BEAM, EXCEPT AT A1 AND P4.
9. AT JUNCTION BOX CUT CURB LONGITUDINAL BARS AS REQUIRED (MAX 2) AND ADD A 4'-6" LONG #4 BAR CENTERED ON BOX TO EACH SIDE. CUT TOPS OFF MAX 3 CURB STIRRUPS AS REQUIRED FOR JUNCTION BOXES. ADD EXTRA STIRRUP EACH END OF BOX.
10. ALL EXPOSED METAL SUCH AS HANDRAIL AND PLATFORMS SHALL BE BONDED AND CONNECTED TO GROUND. CONTRACTOR TO SUBMIT BONDING CONNECTION DIAGRAMS FOR REVIEW.
11. CIP CONCRETE MIX SHALL BE PIGMENTED DARK GREY PER SPECIAL PROVISIONS. CURB FACES SHALL BE STAINED WSDOT GRAY.

CITY OF KIRKLAND
DEPARTMENT OF PUBLIC WORKS
123 FIFTH AVENUE KIRKLAND, WA 98033
(425) 587-3800 www.kirklandwa.gov

NO.	DATE	BY	APPR.	REVISION
0	2019/12/06	CHJS	MWBM	ISSUE FOR BID

COWI

APPROVED BY:

DATE:

SCVA DESIGNED BY: 2019/12/06 DATE
CHJS DRAWN BY: 2019/12/06 DATE
MWBM CHECKED BY: 2019/12/06 DATE

CITY OF KIRKLAND
TOTEM LAKE CONNECTION

SUPERSTRUCTURE
CIP OVERLAY & CURB LAYOUT PLAN

SHEET: TLC-S-145
SCALE: AS SHOWN
FILENAME: A088367-S-145.dwg

File: D:\Projectwise\COWI\wd0301252\A088367-S-145.dwg Save Date: Nov 26, 2019 1:21 PM Saved By: CHJS

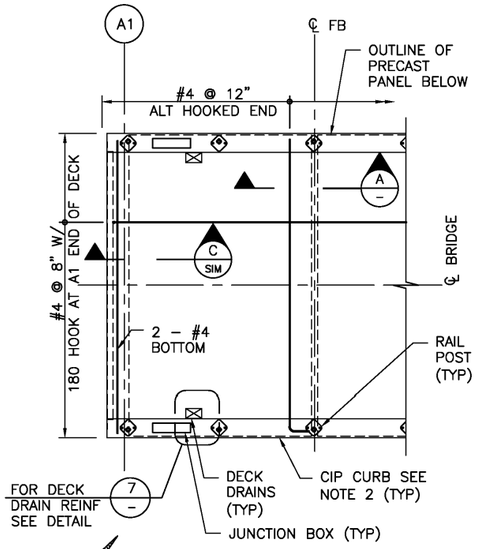

DETAIL 1

SCALE: ¼" = 1'–0"

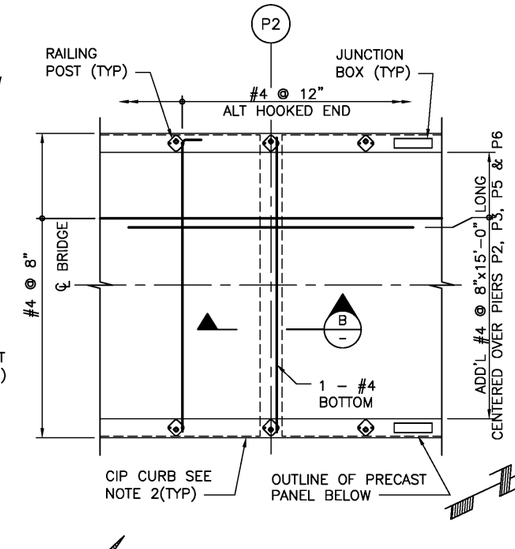

DETAIL 2

SCALE: ¼" = 1'–0"
(TYP FOR PIERS P2, P3, P5, P6)

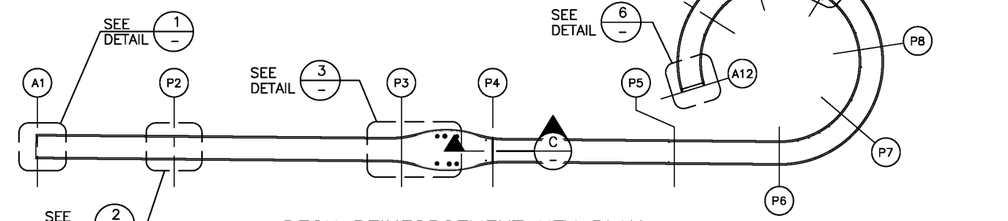

DECK REINFORCEMENT KEY PLAN

SCALE: 1:50

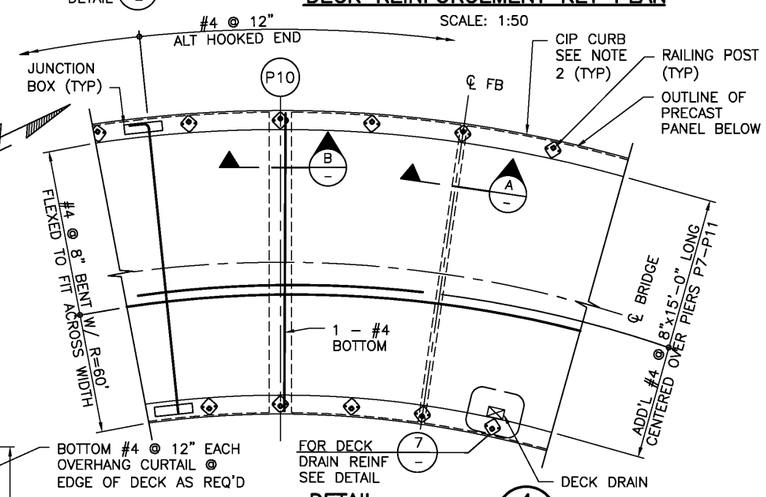

DETAIL 4

SCALE: ¼" = 1'–0"
(TYP FOR PIERS P7–P11)

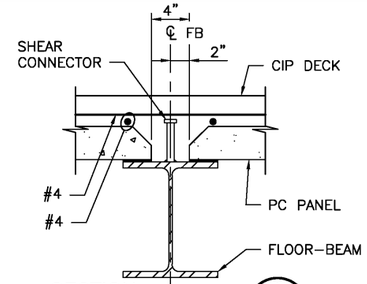

SECTION A

SCALE: 1½" = 1'–0"
(TYP ALL FLOOR–BEAMS)

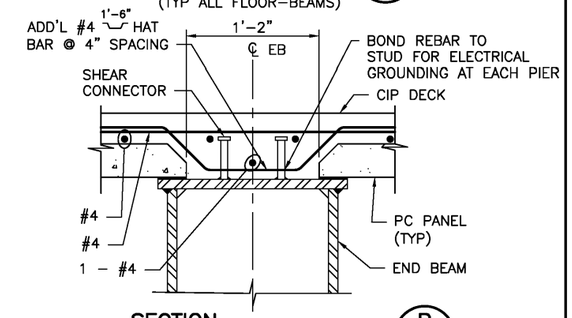

SECTION B

SCALE: 1½" = 1'–0"
(TYP ALL END BEAMS EXCEPT P4)

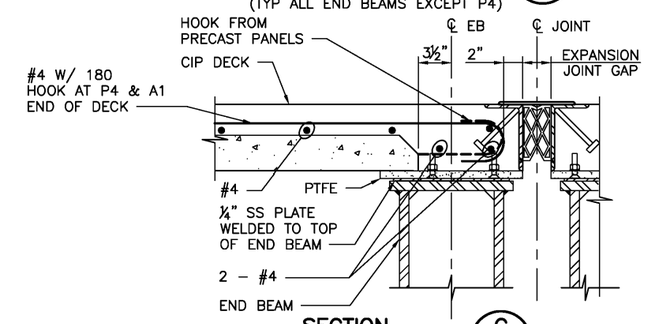

SECTION C

SCALE: 1½" = 1'–0"
(P4 SHOWN, A1 SIMILAR)

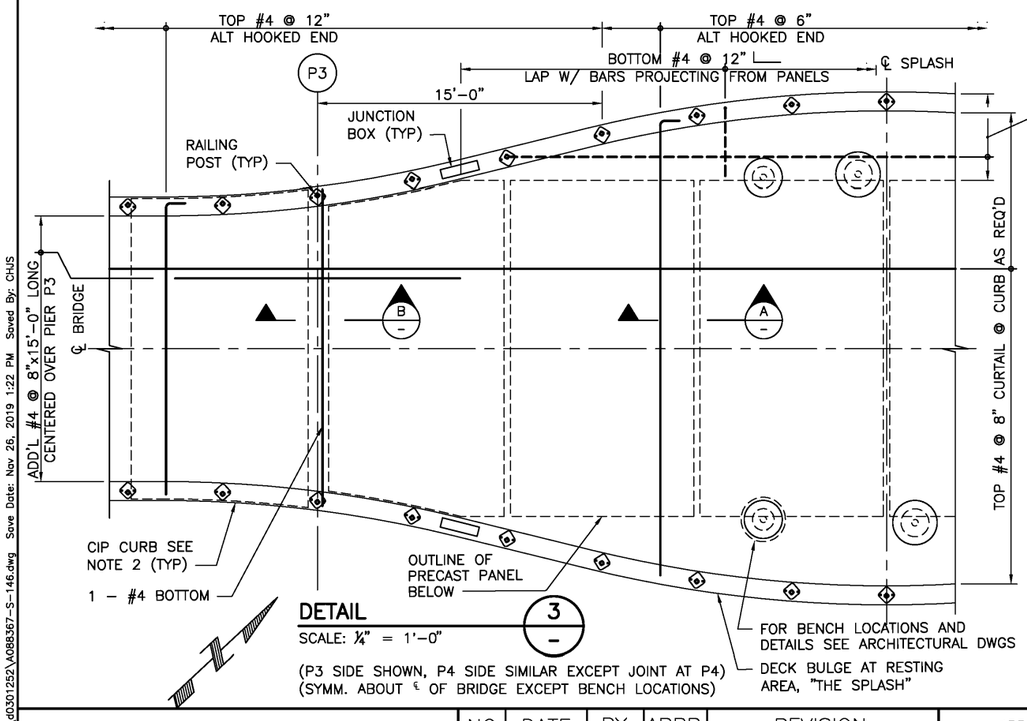

DETAIL 3

SCALE: ¼" = 1'–0"

(P3 SIDE SHOWN, P4 SIDE SIMILAR EXCEPT JOINT AT P4)
(SYMM. ABOUT ℄ OF BRIDGE EXCEPT BENCH LOCATIONS)

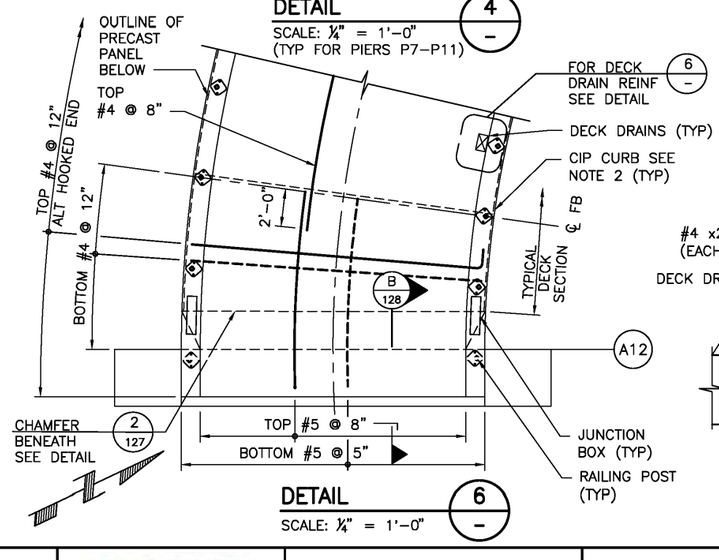

DETAIL 6

SCALE: ¼" = 1'–0"

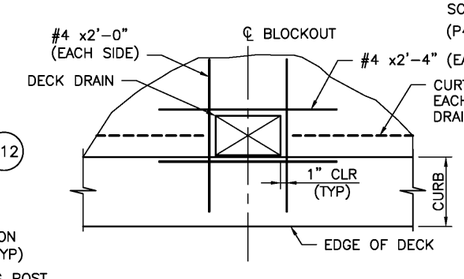

DETAIL 7

SCALE: 1" = 1'–0"

NOTES:

1. FOR GENERAL STRUCTURAL NOTES SEE DWG TLC–S–101.
2. SEE DWG TLC–S–145 FOR CURB REINFORCEMENT.
3. PLACE DRAINS IN POSITION PRIOR TO POURING OVERLAY.

CITY OF KIRKLAND
DEPARTMENT OF PUBLIC WORKS
123 FIFTH AVENUE KIRKLAND, WA 98033
(425) 587-3800 www.kirklandwa.gov

NO.	DATE	BY	APPR.	REVISION
0	2019/12/06	CHJS	MWBM	ISSUE FOR BID

MATTHEW D. BAUGHMAN — STATE OF WASHINGTON — STRUCTURAL ENGINEER — PROFESSIONAL ENGINEER

COWI

APPROVED BY:

DATE:

SCVA DESIGNED BY:	2019/12/06 DATE
CHJS DRAWN BY:	2019/12/06 DATE
MWBM CHECKED BY:	2019/12/06 DATE

CITY OF KIRKLAND
TOTEM LAKE CONNECTION

SUPERSTRUCTURE CIP OVERLAY & CURB REINFORCEMENT

SHEET: TLC–S–146
SCALE: AS SHOWN
FILENAME: A088367–S–146.dwg

File: D:\Projectwise\COWI\dk301252\A088367-S-146.dwg Save Date: Nov 26, 2019 1:22 PM Saved By: CHJS

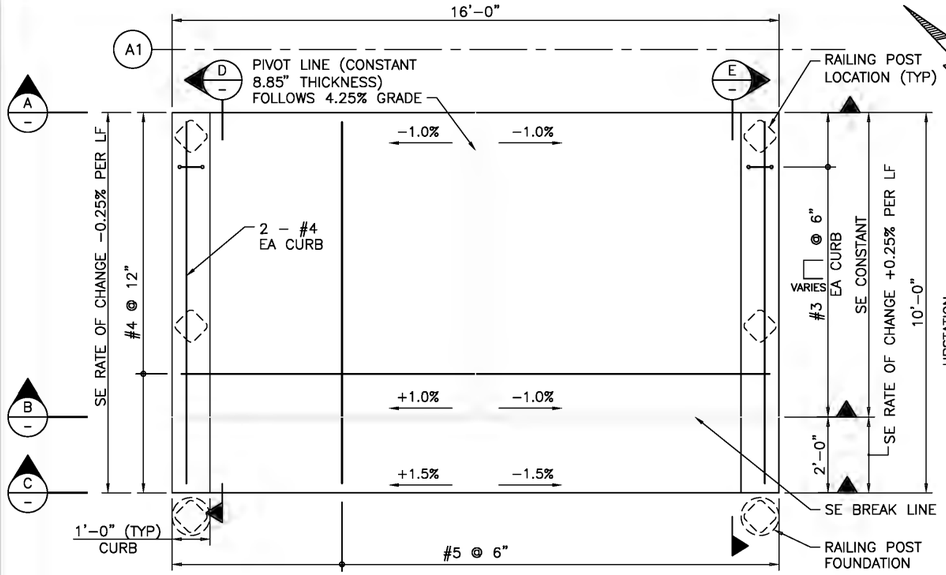

A1 APPROACH SLAB PLAN

SCALE: ½" = 1'-0"

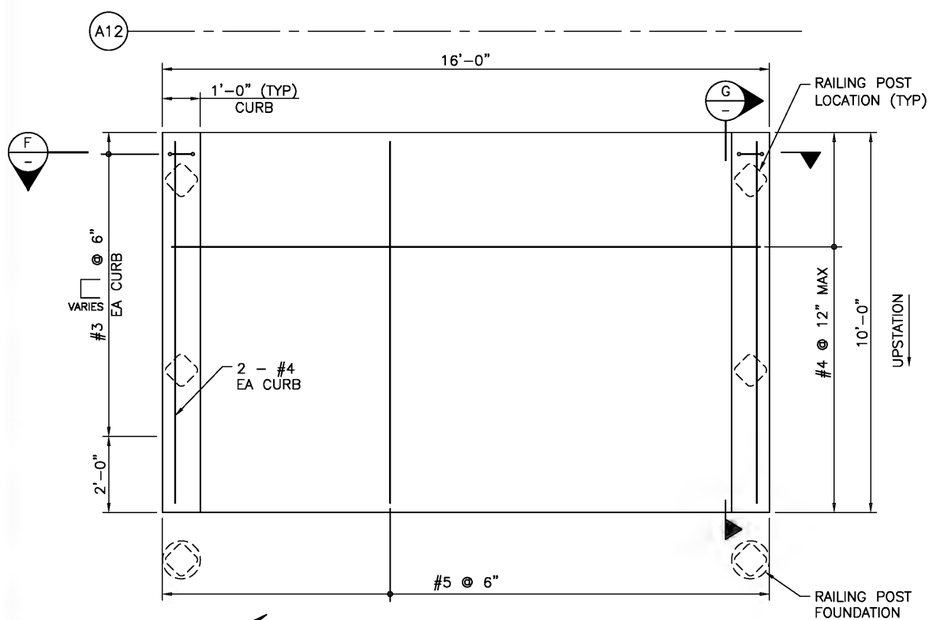

A12 APPROACH SLAB PLAN

SCALE: ½" = 1'-0"

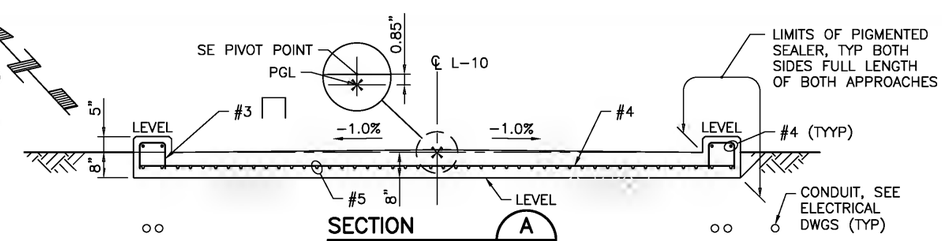

SECTION A

SCALE: ½" = 1'-0" (AT NORTH END)

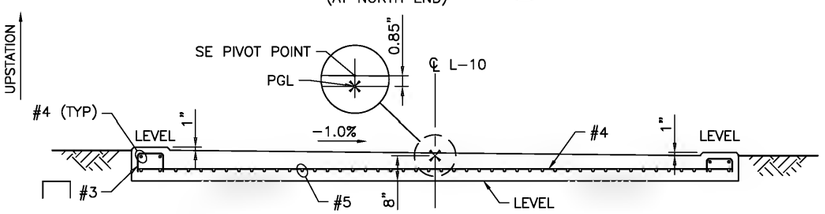

SECTION B

SCALE: ½" = 1'-0" (AT SE BREAK LINE)

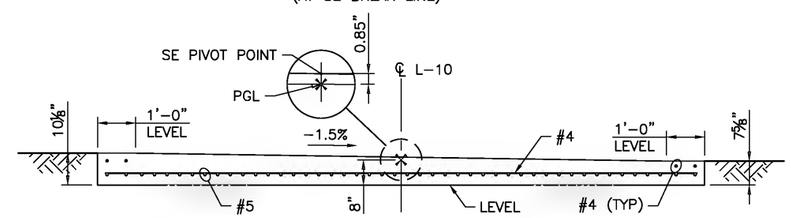

SECTION C

SCALE: ½" = 1'-0" (AT SOUTH END)

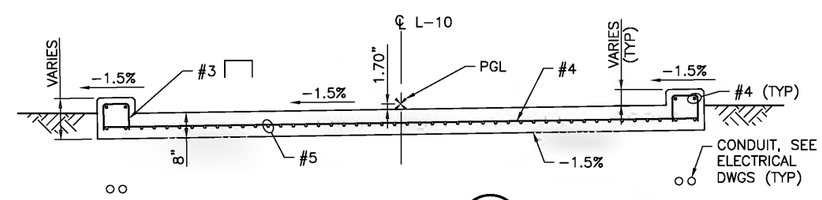

SECTION F

SCALE: ½" = 1'-0"

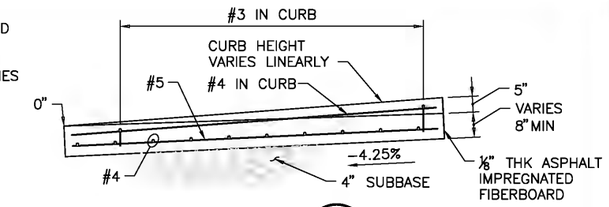

SECTION D

SCALE: ½" = 1'-0"

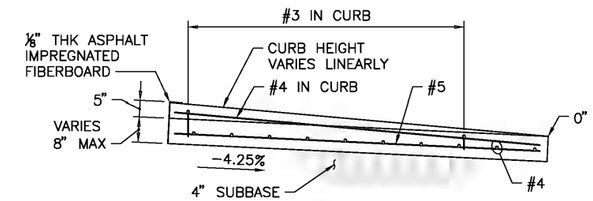

SECTION E

SCALE: ½" = 1'-0"

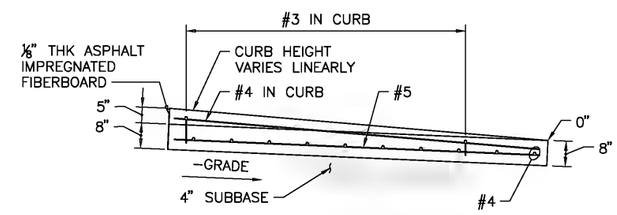

SECTION G

SCALE: ½" = 1'-0"

NOTES:

1. FOR GENERAL STRUCTURAL NOTES SEE DWG TLC-S-101.
2. WALKING SURFACE OF CONCRETE SHALL RECEIVE A TRANSVERSE BROOM FINISH.

CITY OF KIRKLAND
DEPARTMENT OF PUBLIC WORKS
123 FIFTH AVENUE KIRKLAND, WA 98033
(425) 587-3800 www.kirklandwa.gov

NO.	DATE	BY	APPR.	REVISION
0	2019/12/06	CHJS	MWBM	ISSUE FOR BID

COWI

APPROVED BY:

DATE:

SCVA DESIGNED BY. 2019/12/06 DATE
CHJS DRAWN BY. 2019/12/06 DATE
MWBM CHECKED BY. 2019/12/06 DATE

CITY OF KIRKLAND
TOTEM LAKE CONNECTION

SUPERSTRUCTURE APPROACH SLAB

SHEET: TLC-S-147
SCALE: AS SHOWN
FILENAME: A088367-S-147.dwg

File: D:\Projectwise\COWI\WO0012512\A088367-S-147.dwg Save Date: Nov 26, 2019 1:23 PM Saved By: CHJS

TABLE 148–1: GAP "A" SETTING DIMENSIONS (INCHES)					
TEMPERATURE (°F)	20	40	60	80	100
ABUT 1	3¾"	3⅜"	3"	2⅝"	2¼"
PIER 4	3½"	3¼"	3"	2¾"	2½"

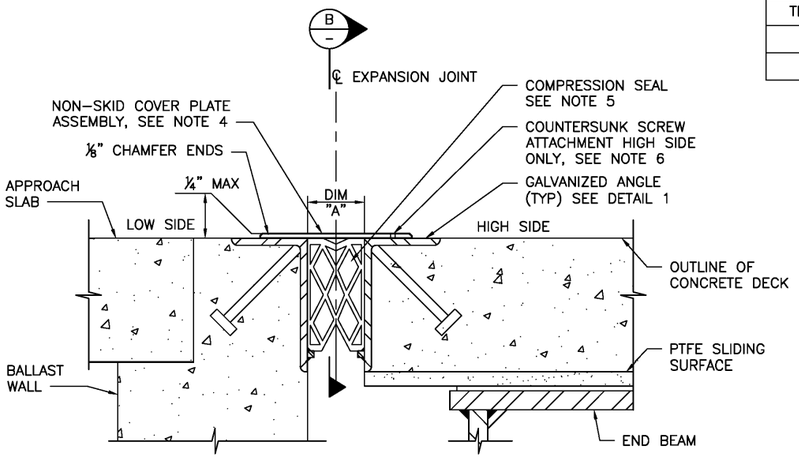

SECTION A/145

SCALE: 3" = 1'–0"
(A1 SHOWN, P4 SIMILAR)

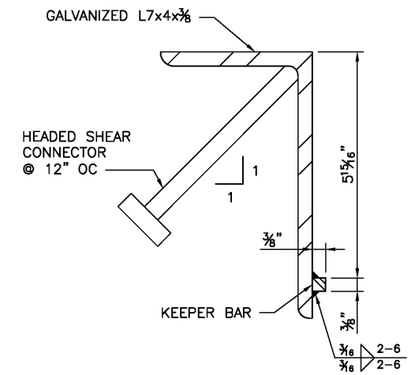

GALVANIZED ANGLE DETAIL 1/–

SCALE: 6" = 1'–0"
(4 REQUIRED)

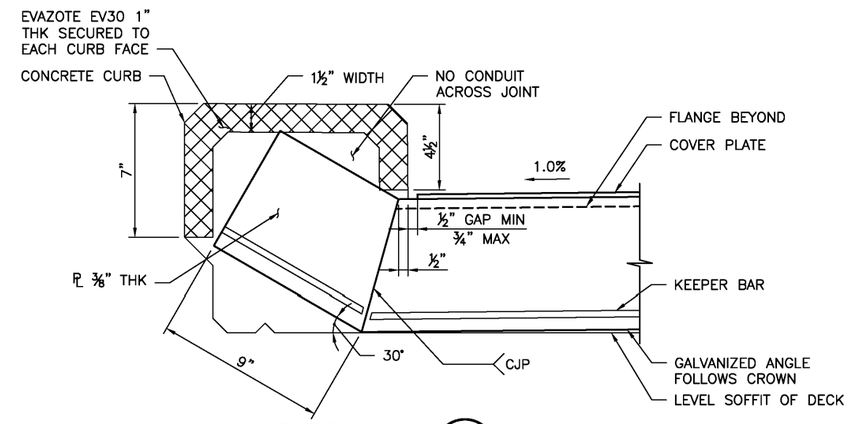

SECTION B/–

SCALE: 3" = 1'–0"
(COMPRESSION SEAL NOT SHOWN FOR CLARITY)

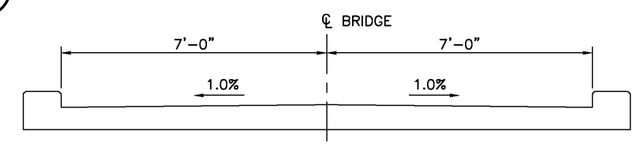

A1 JOINT ELEVATION

SCALE: ½" = 1'–0"

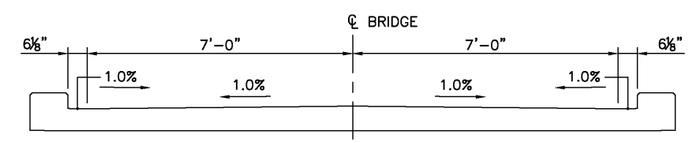

P4 JOINT ELEVATION

SCALE: ½" = 1'–0"

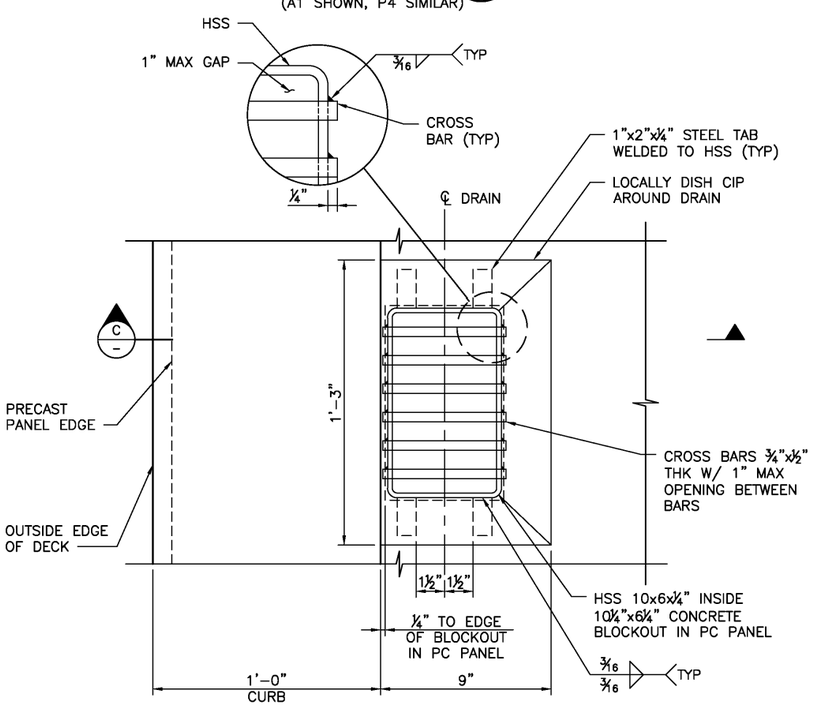

DECK DRAIN PLAN

SCALE: 3" = 1'–0"

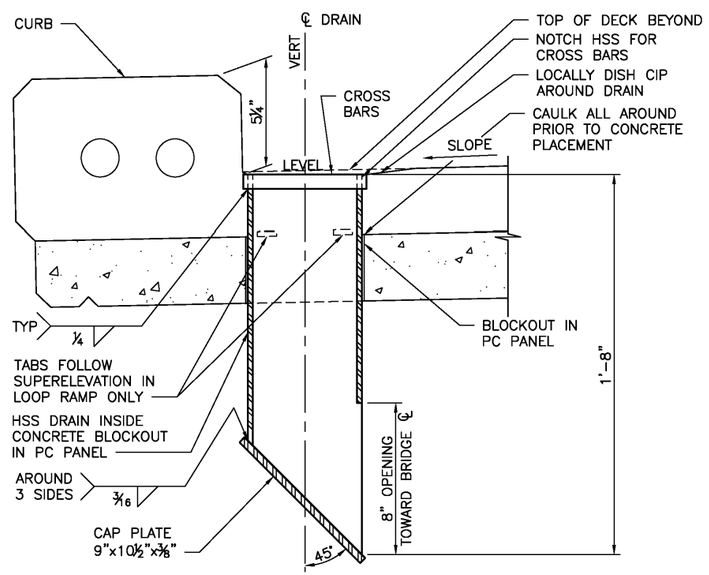

SECTION C/–

SCALE: 3" = 1'–0"
(DRAINS IN LOOP RAMP SHOWN
DRAINS IN ARCH SPANS SIMILAR)

NOTES:

1. FOR GENERAL STRUCTURAL NOTES SEE DWG. TLS–S–101.
2. PAINTED SURFACES SHALL MATCH COLOR USED ON RAILING POSTS.
3. UNLESS NOTED OTHERWISE, ALL STEEL COMPONENTS SHALL BE HOT–DIPPED GALVANIZED AFTER FABRICATION AND ASSEMBLY.
4. COVER PLATE SYSTEM SHALL EXTEND FULL WIDTH BETWEEN CURBS USING WABO SAFETY FLEX ELASTOMERIC, PAINTED STEEL C/W GRIT SURFACE, OR APPROVED EQUIVALENT.
5. COMPRESSION SEAL SHALL EXTEND FULL LENGTH OF ANGLES.
6. BOLTS SHALL BE TORQUED USING TURN–OF–THE–NUT AFTER INSTALLATION OF COMPRESSION SEAL AND COVER PLATE.

CITY OF KIRKLAND
DEPARTMENT OF PUBLIC WORKS
123 FIFTH AVENUE KIRKLAND, WA 98033
(425) 587-3800 www.kirklandwa.gov

NO.	DATE	BY	APPR.	REVISION
0	2019/12/06	CHJS	MWBM	ISSUE FOR BID

MATTHEW D. BACHMAN — STATE OF WASHINGTON — STRUCTURAL ENGINEER — PROFESSIONAL ENGINEER

COWI

APPROVED BY:

DATE:

SCVA DESIGNED BY:	2019/12/06 DATE
CHJS DRAWN BY:	2019/12/06 DATE
MWBM CHECKED BY:	2019/12/06 DATE

CITY OF KIRKLAND
TOTEM LAKE CONNECTION

DRAINS AND JOINT DETAILS

SHEET: TLC–S–148
SCALE: AS SHOWN
FILENAME: A088367–S–148.dwg

File: D:\Projectwise\COWI\d0301252\A088367–S–148.dwg Save Date: Nov 26, 2019 1:22 PM Saved By: CHJS

LEGEND:

- TYPE 1 = MULTI–DIRECTIONAL BEARING
- TYPE 2 = LONGITUDINALLY GUIDED BEARING
- TYPE 3 = TRANSVERSELY GUIDED BEARING
- TYPE 4 = FIXED BEARING
- FREE DIRECTION
- FIXED DIRECTION

TLC–S–149 TABLE 1: BEARING DESIGN LOADS AND MOVEMENTS (PER BEARING)

LOCATION	BEARING TYPES	END BEAM SLOPE %	VERTICAL				TRANSVERSE			LONGITUDINAL			DISPLACEMENT			ROTATION			TOP OF BEARING ELEVATION
			DL KIP	SERVICE [MAX] KIP	STRENGTH [MIN] KIP	STRENGTH [MAX] KIP	SERVICE KIP	STRENGTH KIP	EXTREME KIP	SERVICE KIP	STRENGTH KIP	EXTREME KIP	SERVICE IN.	STRENGTH IN.	EXTREME IN. *	SERVICE RAD	STRENGTH RAD	EXTREME RAD	
A1	1,2	+4.1	60	90	20	120	20	30	290	0	0	0	1.8	1.7	+7.5/–3.5	0.006	0.008	0.006	160.33
P2	1,2	+2.3	160	250	70	340	20	30	290	0	0	0	1.4	1.3	+7.5/–3.5	0.003	0.004	0.002	163.22
P3	3,4	–0.7	150	240	60	330	30	40	290	10	20	100	0	0	0	0.002	0.003	0.003	164.43
P4S	1,1	–1.9	40	80	10	110	0	0	0	0	0	0	0.5	0.5	+7.5/–3.5	0.004	0.005	0.003	163.66
P4N	1,2	–1.9	80	120	30	160	20	30	290	0	0	0	1.2	1.1	4.0	0.007	0.010	0.006	163.63
P5	3,4	–4.3	130	200	50	280	20	30	290	20	30	100	0	0	0	0.003	0.003	0.003	159.93
P6	1,2	–4.3	70	120	20	160	40	50	290	0	0	0	0.5	0.6	4.0	0.003	0.004	0.002	156.96

* "+" = NE
* "–" = SW

NOTES:

1. DISPLACEMENT AND ROTATIONS ARE EACH WAY (± THE VALUES SHOWN), UNO.
2. TRANSVERSE REACTIONS ARE TAKEN BY TYPES 2 AND 4 BEARINGS ONLY.
3. LONGITUDINAL REACTIONS ARE TAKEN BY TYPES 3 AND 4 BEARINGS ONLY.
4. TRANSVERSE MOVEMENT DEMANDS AT TYPES 1 AND 3 BEARINGS IS ± ¼".
5. TRANSVERSE ROTATION DEMANDS ARE NEGLIGIBLE.
6. VERTICAL ROTATION DEMANDS ARE NEGLIGIBLE.
7. THE TABLE ABOVE DOES NOT INCLUDE AN ALLOWANCE FOR UNCERTAINTIES AS REQUIRED BY AASHTO LRFD BDS.
8. DISPLACEMENTS ARE BASED ON THE BEARINGS BEING INSTALLED AT 60°F. SEE EXPANSION BEARING SETTING TABLE.

TLC–S–149 TABLE 2: EXPANSION BEARING SETTING TABLE *

LOCATION	0°F	30°F	60°F	90°F	120°F
A1	+1⅛"	+½"	0	–½"	–1⅛"
P2	+¾"	+⅜"	0	–⅜"	–¾"
P4S	–¼"	–⅛"	0	+⅛"	+¼"
P4N	+½"	+¼"	0	–¼"	–½"
P6	–⅜"	–3/16"	0	+3/16"	+⅜"

* "+" = NE
* "–" = SW

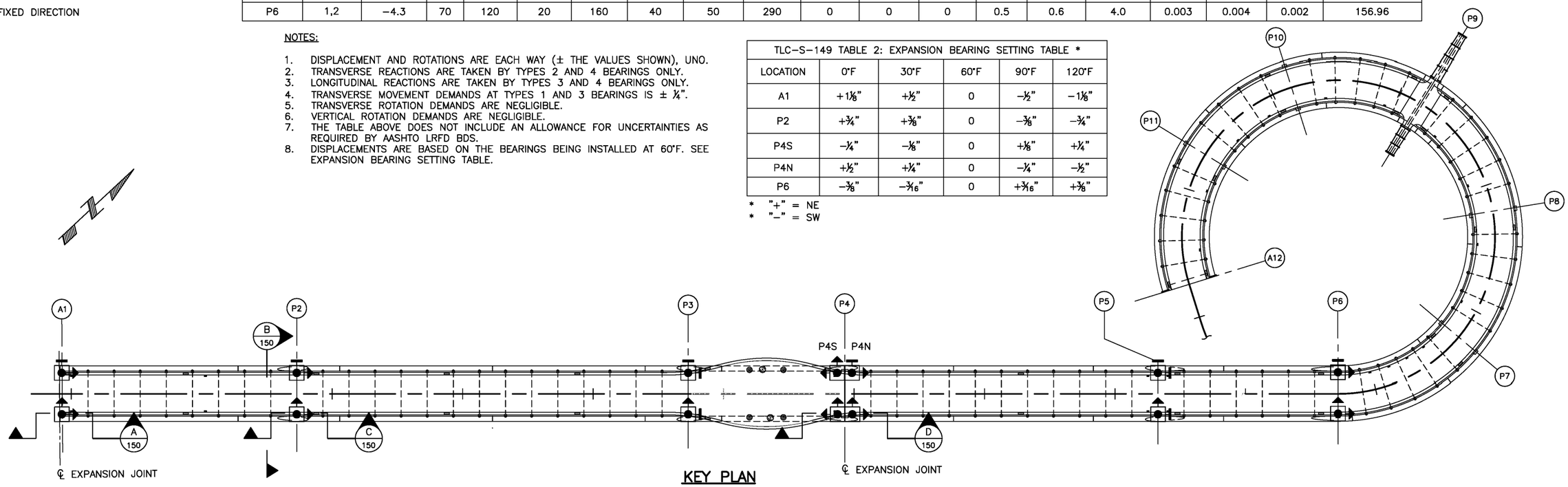

KEY PLAN
SCALE: 1" = 20'

NOTES:

1. FOR GENERAL STRUCTURAL NOTES SEE DWG TLC–S–101.
2. ALL BEARINGS SHALL BE DISC BEARINGS, DESIGNED AND FABRICATED IN ACCORDANCE WITH THE SPECIAL PROVISIONS. BEARINGS SHALL BE DESIGNED AND DETAILED TO BE EASILY REPLACEABLE.
3. BEARING SUPPLIER SHALL SUBMIT DETAILED DESIGN CALCULATIONS AND SHOP DRAWINGS TO THE ENGINEER OF RECORD FOR REVIEW AND APPROVAL PRIOR TO BEGINNING FABRICATION.
4. BEARING REPLACEMENT PROCEDURE:
   - i. DESIGN AND DETAILS OF JACKING PROCESS FOR BEARING REPLACEMENT SHALL BE REVIEWED AND APPROVED BY A WASHINGTON SE.
   - ii. BRIDGE SHALL BE CLOSED TO TRAFFIC DURING ALL STAGES OF JACKING AND BEARING REPLACEMENT. JACKING SHALL OCCUR NEAR THE NOMINAL CONSTRUCTION TEMPERATURE TO MINIMIZE RESTRAINT FORCES.
4. BEARING REPLACEMENT PROCEDURE (CONTINUED):
   - iii. JACKS SHALL BE LOCATED AS SHOWN ON PIER AND ABUTMENT SHEETS. A LOAD DISTRIBUTION PLATE SHALL BE PLACED ON THE CONCRETE TO LIMIT THE BEARING STRESS TO 4 KSI.
   - iv. EACH ENTIRE BEARING ASSEMBLY, BETWEEN THE SOLE PLATE AND THE MASONRY PLATE, SHALL BE REPLACEABLE WITHOUT DAMAGE TO THE STRUCTURE AND WITHOUT LIFTING THE SUPERSTRUCTURE MORE THAN ½".
   - v. AT A GIVEN PIER OR ABUTMENT, ALL JACKS SHALL BE LOADED SIMULTANEOUSLY, ENSURING THAT THE MAXIMUM DIFFERENTIAL JACKING HEIGHT BETWEEN THEM IS LESS THAN ⅛".

CITY OF KIRKLAND
DEPARTMENT OF PUBLIC WORKS
123 FIFTH AVENUE KIRKLAND, WA 98033
(425) 587-3800 www.kirklandwa.gov

NO.	DATE	BY	APPR.	REVISION
0	2019/12/06	CHJS	MWBM	ISSUE FOR BID

MATTHEW D. BAUGHMAN — STATE OF WASHINGTON — STRUCTURAL ENGINEER — PROFESSIONAL ENGINEER

COWI

APPROVED BY:

DATE:

SCVA 2019/12/06
DESIGNED BY: DATE

CHJS 2019/12/06
DRAWN BY: DATE

MWBM 2019/12/06
CHECKED BY: DATE

CITY OF KIRKLAND
TOTEM LAKE CONNECTION

BEARING PLAN

SHEET: TLC–S–149
SCALE: AS SHOWN
FILENAME: A088367–S–149.dwg

File: D:\Projectwise\COWI\d0301252\A088367-S-149.dwg Save Date: Nov 26, 2019 1:21 PM Saved By: CHJS

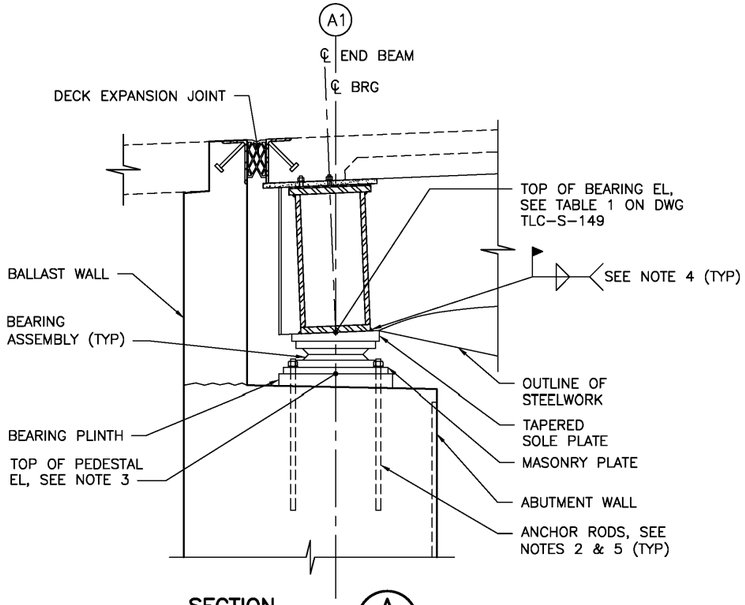

SECTION A/149
SCALE: 1" = 1'-0"

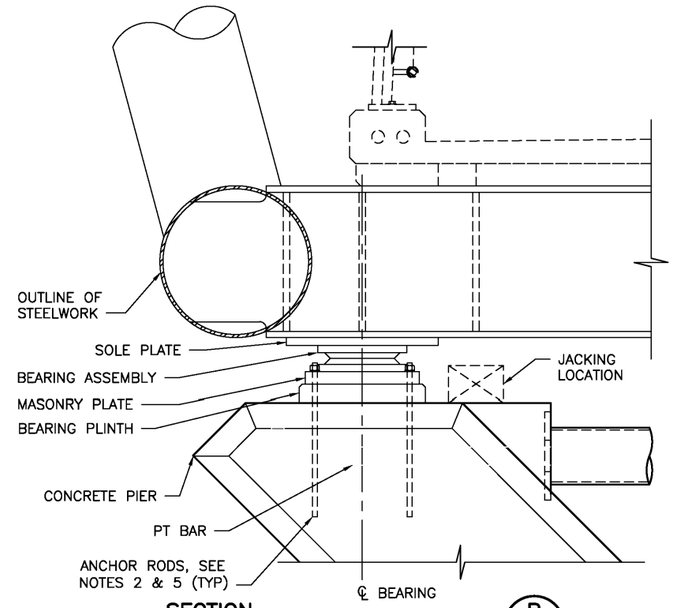

SECTION B/149
SCALE: 1" = 1'-0"
(PIER 2 SHOWN, PIERS 3, 5 & 6 SAME)
(ABUTMENT 1 & PIER 4 SIMILAR)

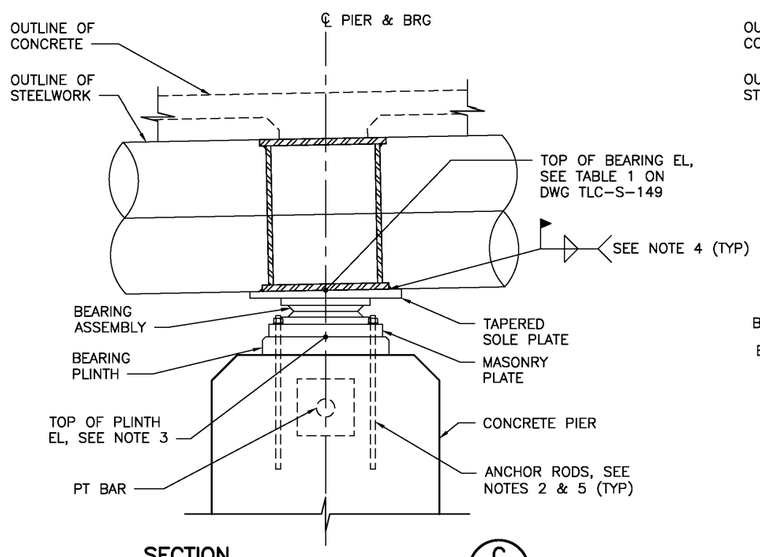

SECTION C/149
SCALE: 1" = 1'-0"
(PIER 2 SHOWN, PIERS 3, 5 & 6 SIMILAR)

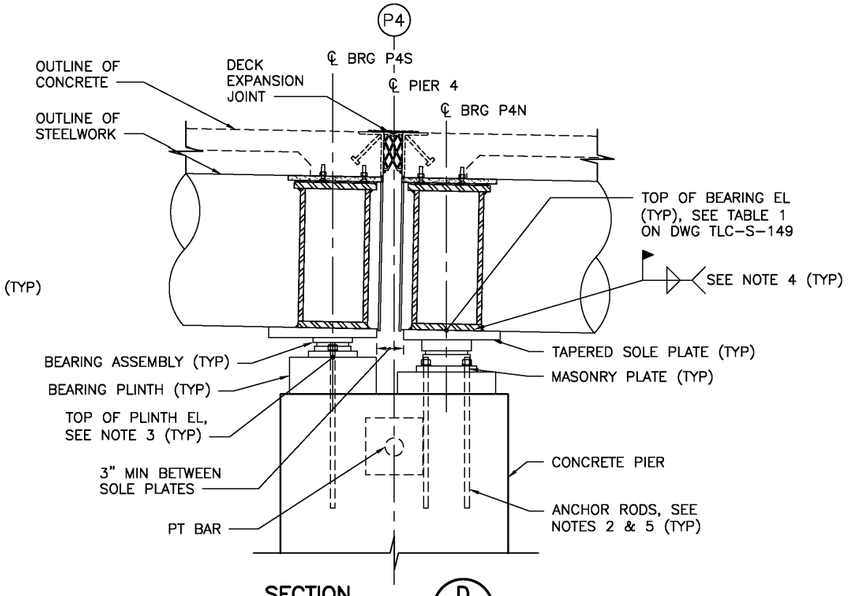

SECTION D/149
SCALE: 1" = 1'-0"

NOTES:

1. FOR GENERAL STRUCTURAL NOTES SEE DWG TLC-S-101.
2. MASONRY PLATE SHALL BE CONNECTED TO SUBSTRUCTURE USING 4 COUNT 1½"ø F1554 GRADE 105 ANCHOR RODS AT TYPES 2 AND 4 BEARINGS. NUMBER AND SIZE OF ANCHOR RODS MAY BE REDUCED AT OTHER BEARINGS PER THE BEARING SUPPLIER'S DESIGNS. ANCHOR RODS SHALL EXTEND 18" MINIMUM BELOW TOP OF PIER OR TOP OF ABUTMENT SEAT.
3. CONTRACTOR SHALL ESTABLISH BEARING PLINTH ELEVATIONS BY DEDUCTING THE ACTUAL BEARING THICKNESS FROM THE TOP OF BEARING ELEVATIONS.
4. LENGTH AND SIZE OF WELD CONNECTING SOLE PLATE TO END BEAM SHALL BE PER THE BEARING SUPPLIER'S DESIGN.
5. ANCHOR RODS MAY BE INSTALLED USING BLOCKOUTS OR COUPLERS PER MANUFACTURER REQUIREMENTS.

CITY OF KIRKLAND
DEPARTMENT OF PUBLIC WORKS
123 FIFTH AVENUE KIRKLAND, WA 98033
(425) 587-3800 www.kirklandwa.gov

NO.	DATE	BY	APPR.	REVISION
0	2019/12/06	CHJS	MWBM	ISSUE FOR BID

MATTHEW D. BAUGHMAN — STATE OF WASHINGTON — STRUCTURAL ENGINEER — PROFESSIONAL ENGINEER

COWI

APPROVED BY:

DATE:

SCVA DESIGNED BY. 2019/12/06 DATE
CHJS DRAWN BY. 2019/12/06 DATE
MWBM CHECKED BY. 2019/12/06 DATE

CITY OF KIRKLAND
TOTEM LAKE CONNECTION

BEARING DETAILS

SHEET: TLC-S-150
SCALE: AS SHOWN
FILENAME: A088367-S-150.dwg

File: D:\Projectwise\COWI\d0301252\A088367-S-150.dwg Save Date: Nov 26, 2019 1:23 PM Saved By: CHJS

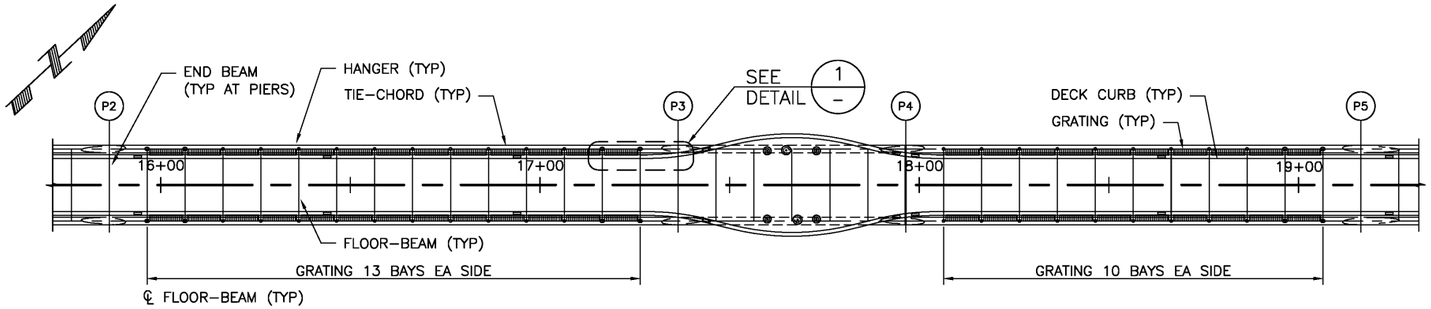

GRATING PLAN

SCALE: 1" = 20'
(ARCH NOT SHOWN FOR CLARITY)

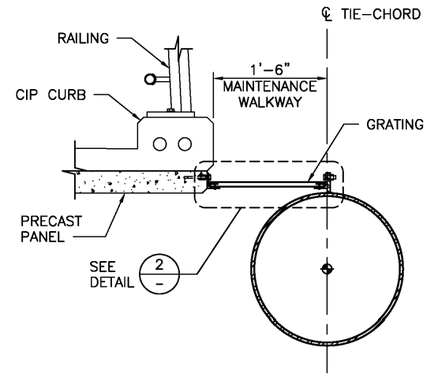

SECTION A –

SCALE: 1" = 1'-0"

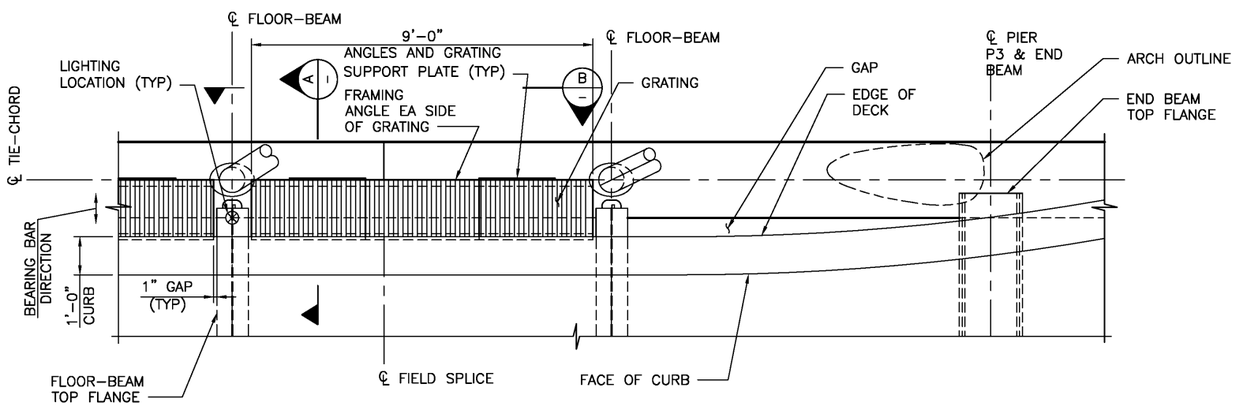

DETAIL 1 –

SCALE: ½" = 1'-0"
(ARCH NOT SHOWN FOR CLARITY)

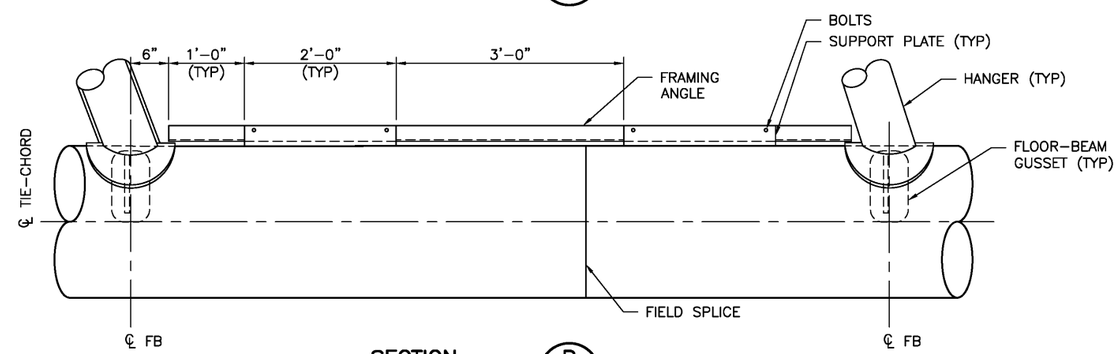

SECTION B –

SCALE: 1" = 1'-0"

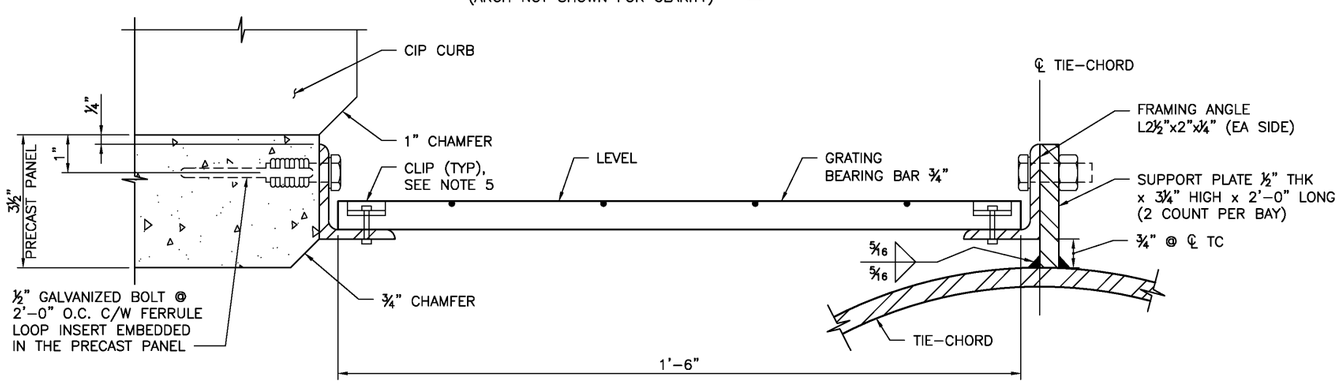

DETAIL 2 –

SCALE: 6" = 1'-0"

NOTES:

1. FOR GENERAL STRUCTURAL NOTES SEE DWG. TLS-S-101.
2. GRATING SHALL BE HOT DIPPED GALVANIZED WELDED BAR STEEL GRATING WITH ¾"x⅛" BEARING BARS 1 3/16" O.C.
3. GRATING SHALL BE CUT FROM 3 FOOT WIDE STANDARD GRATING WITH EXPOSED ENDS BRUSH PAINTED WITH GALVACON OR APPROVED EQUIVALENT.
4. FRAMING ANGLES AND SUPPORT PLATES SHALL BE PAINTED THE SAME DARK GRAY COLOR AS THE RAILING POSTS.
5. GRATING CLIPS AND BOLTS PER MANUFACTURER REQUIREMENTS.

CITY OF KIRKLAND
DEPARTMENT OF PUBLIC WORKS
123 FIFTH AVENUE KIRKLAND, WA 98033
(425) 587-3800 www.kirklandwa.gov

NO.	DATE	BY	APPR.	REVISION
0	2019/12/06	CHJS	MWBM	ISSUE FOR BID

MATTHEW D. BAUGHMAN — STATE OF WASHINGTON — STRUCTURAL ENGINEER — PROFESSIONAL ENGINEER

COWI

APPROVED BY:

DATE:

SCVA DESIGNED BY. 2019/12/06 DATE
CHJS DRAWN BY. 2019/12/06 DATE
MWBM CHECKED BY. 2019/12/06 DATE

CITY OF KIRKLAND
TOTEM LAKE CONNECTION

MAINTENANCE WALKWAY

SHEET: TLC-S-151
SCALE: AS SHOWN
FILENAME: A088367-S-151.dwg

File: D:\Projectwise\COWI\d0301252\A088367-S-151.dwg Save Date: Nov 26, 2019 1:23 PM Saved By: CHJS

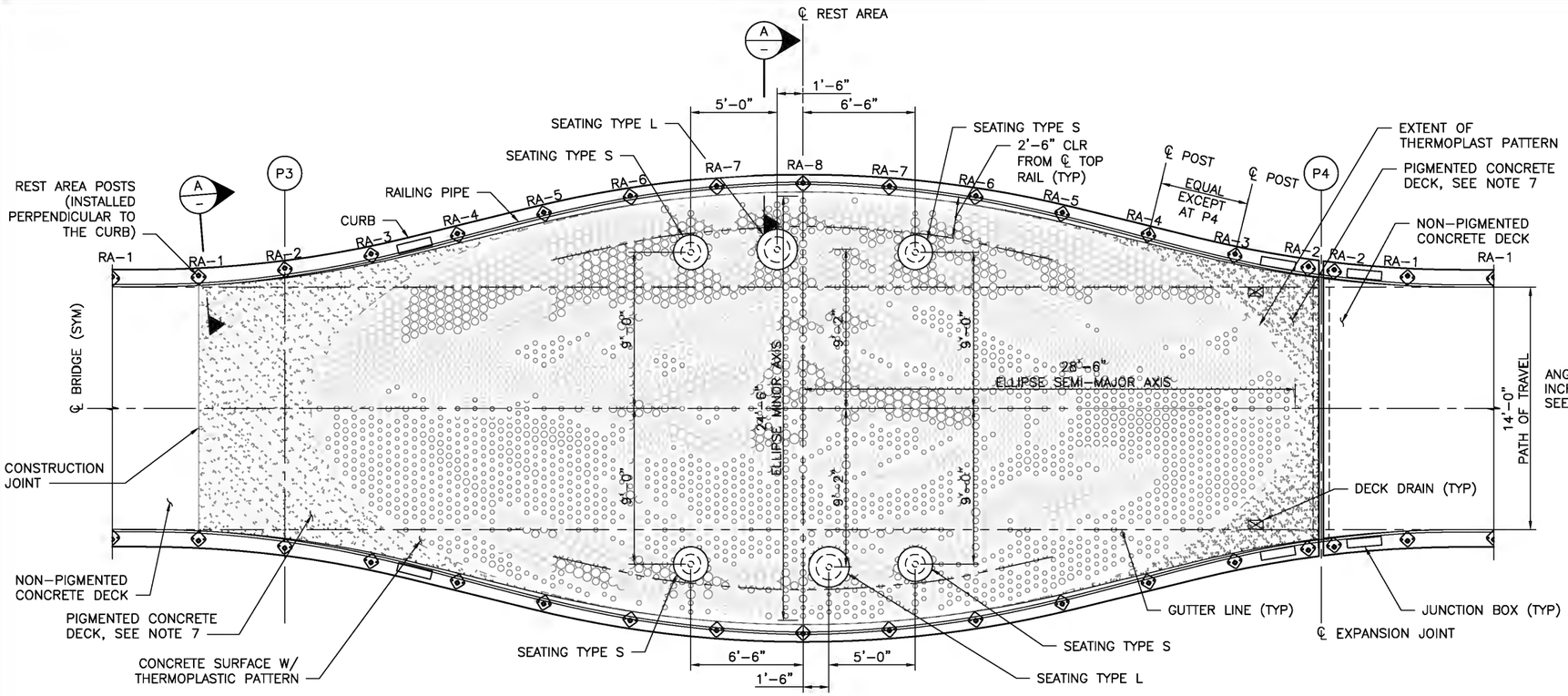

REST AREA DETAIL 4/155

SCALE: ¼" = 1'-0"

*** NOTE:**

SEE TYPICAL RAILING SECTION ON SHEET TLC-A-155 FOR DETAILS.

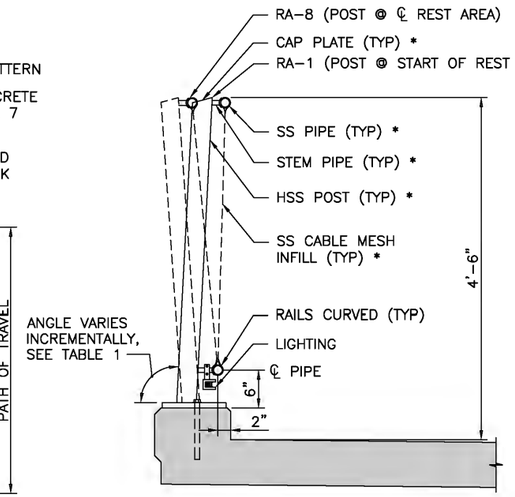

TLC-A-152 TABLE 1: POST ANGLE		
POST ID	COUNT	ANGLE
RA-1	4	93°
RA-2	6	92°
RA-3	4	91°
RA-4	4	90°
RA-5	4	89°
RA-6	4	88°
RA-7	4	87°
RA-8	2	86°

SECTION A/–

SCALE: 1" = 1'-0"

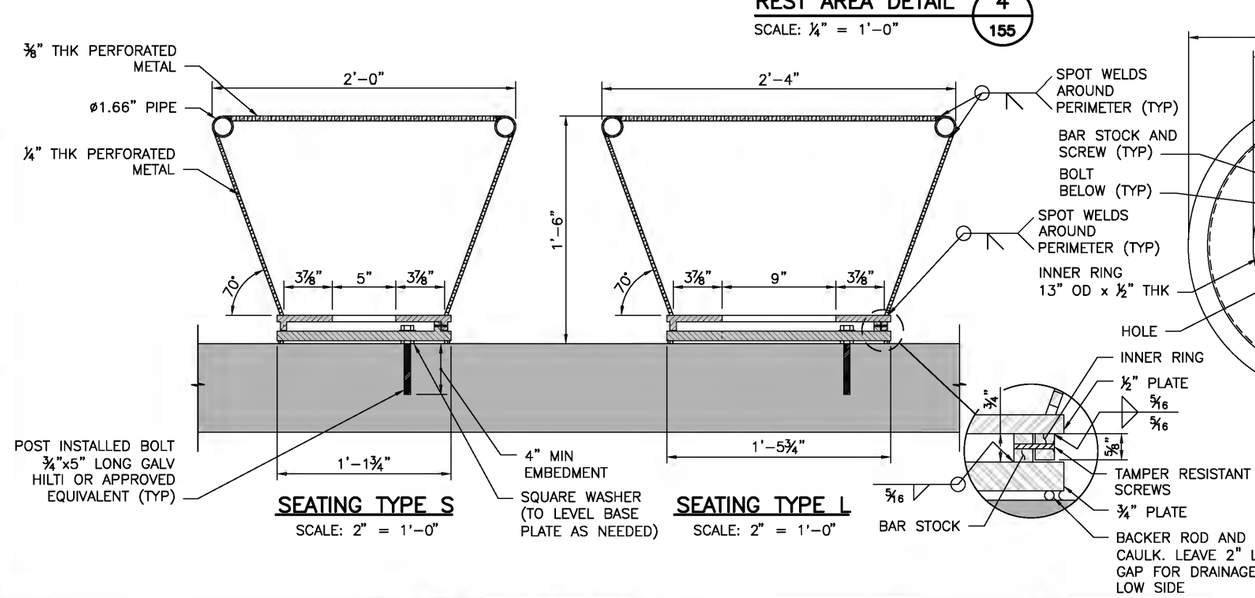

SEATING TYPE S

SCALE: 2" = 1'-0"

SEATING TYPE L

SCALE: 2" = 1'-0"

TYPE S – PLAN

SCALE: 2" = 1'-0"

TYPE L – PLAN

SCALE: 2" = 1'-0"

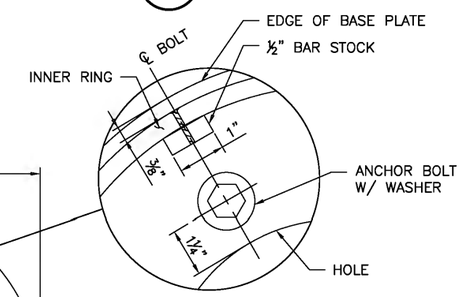

NOTES:

1. FOR GENERAL STRUCTURAL NOTES, SEE DWG TLC-S-101.
2. SEATING SHALL BE FABRICATED OF PERFORATED SHEET METAL WITH 40% OPENING DENSITY.
3. SHOP ASSEMBLED SEATING SHALL BE PAINTED ACCORDING TO SECTION 6-07 OF THE SPECIAL PROVISIONS.
4. ALL TAMPER RESISTANT BOLTS SHALL BE STAINLESS STEEL.
5. ALL ENLARGED DETAILS ARE AT 6"=1'-0".
6. CONTRACTOR TO CONFIRM BENCH FABRICATION DETAILS.
7. SPAN 3 CIP CONCRETE MIX SHALL BE PIGMENTED BLUE PER SPECIAL PROVISIONS. SOFFIT AND CURB FACES SHALL BE STAINED GRAY PER SPECIAL PROVISIONS.

CITY OF KIRKLAND
DEPARTMENT OF PUBLIC WORKS
123 FIFTH AVENUE KIRKLAND, WA 98033
(425) 587-3800 www.kirklandwa.gov

NO.	DATE	BY	APPR.	REVISION
0	2019/12/06	SM	EB	ISSUE FOR BID

COWI VIA

APPROVED BY:

DATE:

E. BIRKHAUSER	DESIGNED BY:	2019/12/06 DATE
C. JENSEN	DRAWN BY:	2019/12/06 DATE
G. BALL	CHECKED BY:	2019/12/06 DATE

CITY OF KIRKLAND
TOTEM LAKE CONNECTION

REST AREA

SHEET: TLC-A-152

SCALE: AS SHOWN

FILENAME: A088367-A-153-157.dwg

File: D:\Projectwise\COWI\d0301252\A088367-A-153-157.dwg Save Date: Nov 26, 2019 1:23 PM Saved By: CHJS

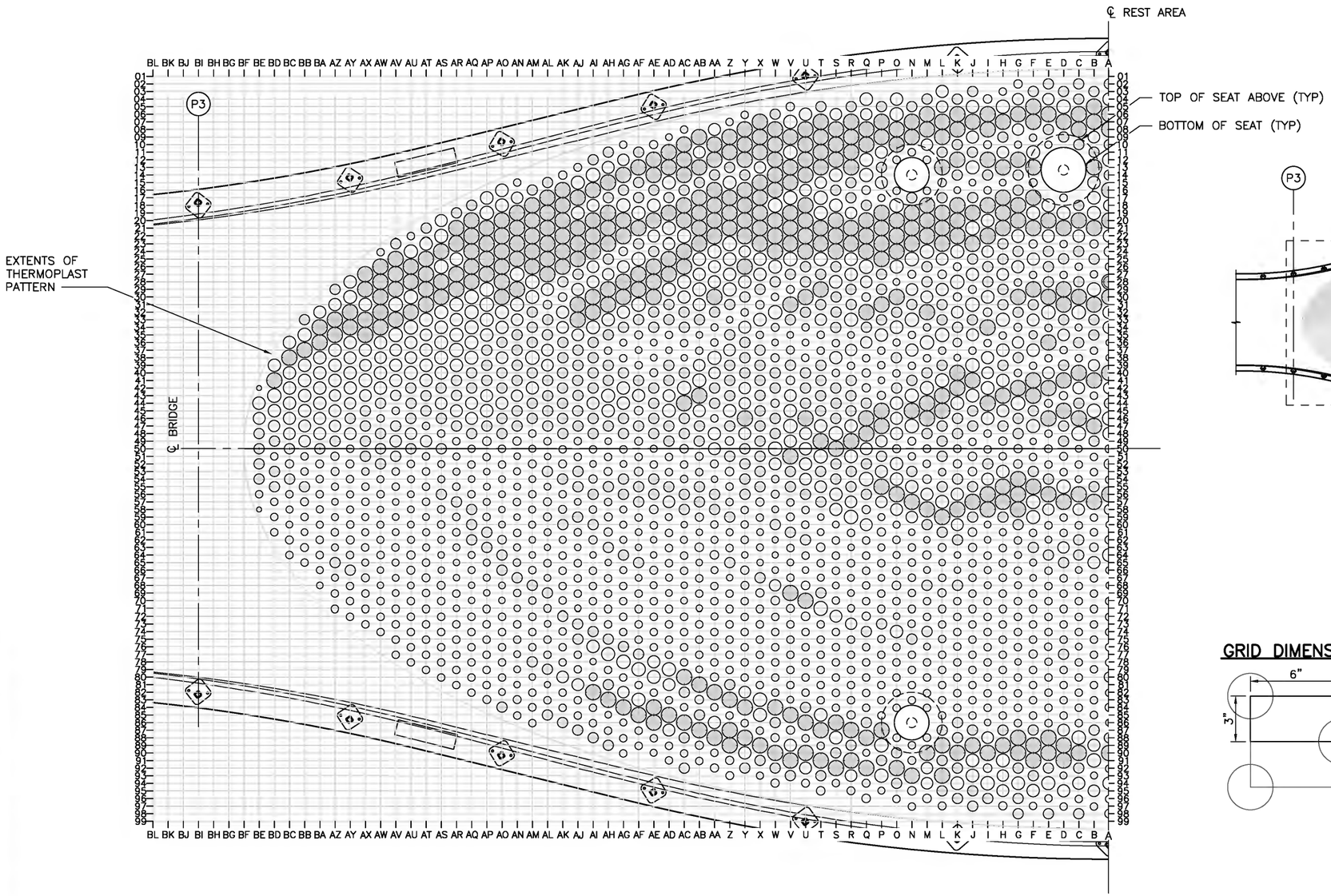

REST AREA PAVING PLAN – WEST

SCALE: ½" = 1'–0"

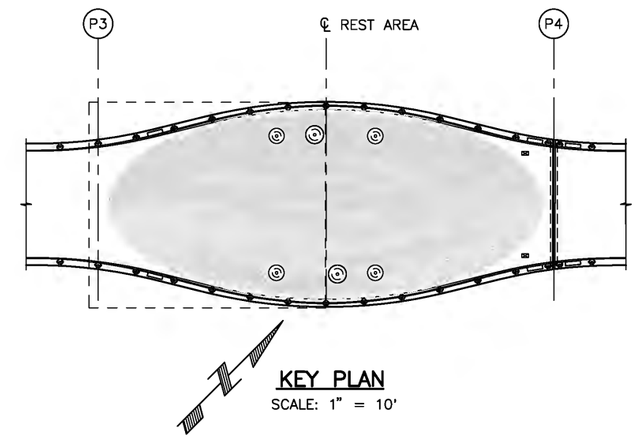

KEY PLAN

SCALE: 1" = 10'

GRID DIMENSIONS:

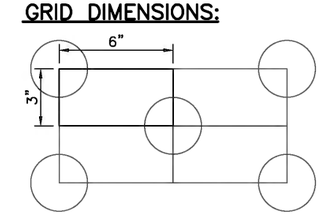

LEGEND:

- R0'–1½"
- R0'–2"
- R0'–2½"
- R0'–3"

NOTES:

1. FOR GENERAL STRUCTURAL NOTES, SEE DWG TLC–S–101.
2. THERMOPLASTIC PATTERN MAY BE PRECUT FROM SHEETS AND APPLIED TO DECK USING TEMPORARY BACKING SHEET OR MANUALLY GRIDDED AND APPLIED.
3. FOR INFORMATION REGARDING APPLICATION OF THERMOPLASTIC APPLICATION, SEE SPECIAL PROVISIONS.

CITY OF KIRKLAND
DEPARTMENT OF PUBLIC WORKS
123 FIFTH AVENUE KIRKLAND, WA 98033
(425) 587-3800 www.kirklandwa.gov

NO.	DATE	BY	APPR.	REVISION
0	2019/12/06	SM	EB	ISSUE FOR BID

COWI
VIA

APPROVED BY:

DATE:

E. BIRKHAUSER 2019/12/06
DESIGNED BY: DATE

C. JENSEN 2019/12/06
DRAWN BY: DATE

G. BALL 2019/12/06
CHECKED BY: DATE

CITY OF KIRKLAND
TOTEM LAKE CONNECTION

REST AREA PAVING PLAN – SHEET 1

SHEET: TLC–A–153
SCALE: AS SHOWN
FILENAME: A088367–A–153–157.dwg

File: D:\Projectwise\COWI\d0301252\A088367-A-153-157.dwg Save Date: Nov 26, 2019 1:23 PM Saved By: CHJS

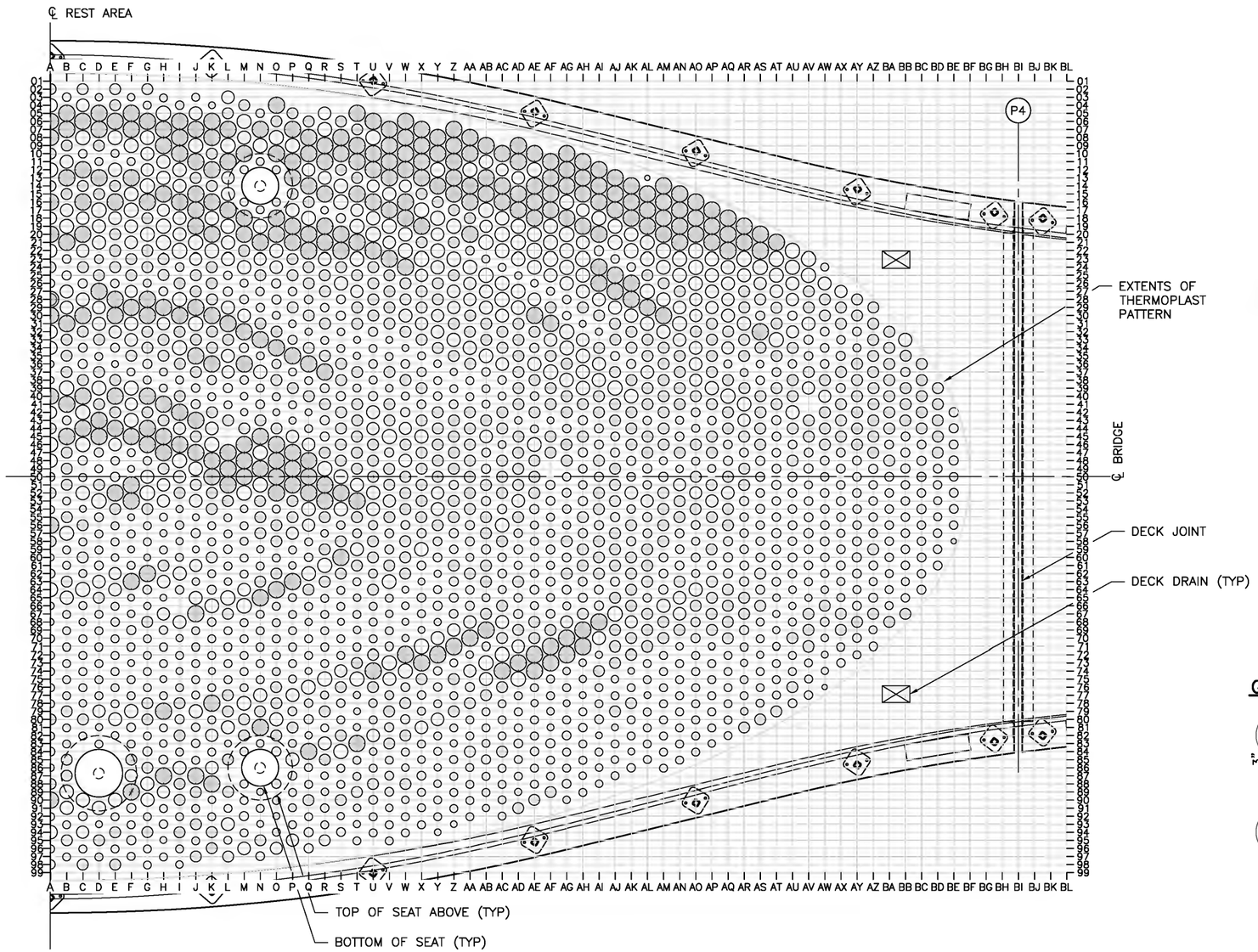

REST AREA PAVING PLAN – EAST

SCALE: ½" = 1'–0"

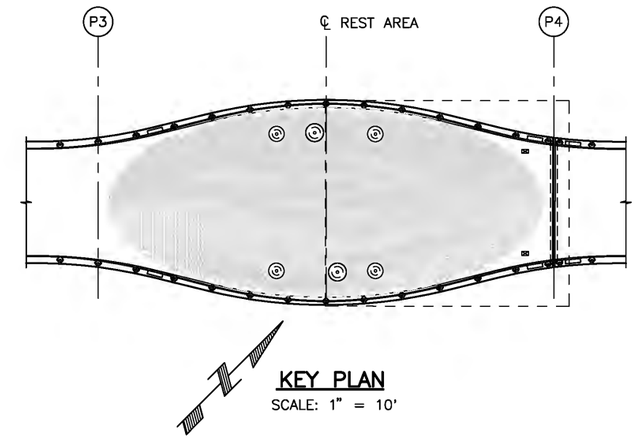

KEY PLAN

SCALE: 1" = 10'

GRID DIMENSIONS:

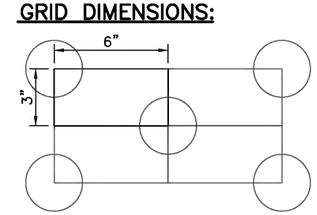

LEGEND:

- R0'–1½"
- R0'–2"
- R0'–2½"
- R0'–3"

NOTES:

1. FOR GENERAL STRUCTURAL NOTES, SEE DWG TLC–S–101.
2. THERMOPLASTIC PATTERN MAY BE PRECUT FROM SHEETS AND APPLIED TO DECK USING TEMPORARY BACKING SHEET OR MANUALLY GRIDDED AND APPLIED.
3. FOR INFORMATION REGARDING APPLICATION OF THERMOPLASTIC APPLICATION, SEE SPECIAL PROVISIONS.

CITY OF KIRKLAND
DEPARTMENT OF PUBLIC WORKS
123 FIFTH AVENUE KIRKLAND, WA 98033
(425) 587-3800 www.kirklandwa.gov

NO.	DATE	BY	APPR.	REVISION
0	2019/12/06	SM	EB	ISSUE FOR BID

COWI
VIA

APPROVED BY:

DATE:

E. BIRKHAUSER 2019/12/06
DESIGNED BY: DATE

C. JENSEN 2019/12/06
DRAWN BY: DATE

G. BALL 2019/12/06
CHECKED BY: DATE

CITY OF KIRKLAND
TOTEM LAKE CONNECTION

REST AREA PAVING PLAN – SHEET 2

SHEET: TLC–A–154
SCALE: AS SHOWN
FILENAME: A088367–A–153–157.dwg

File: D:\Projectwise\COWI\d0301252\A088367-A-153-157.dwg Save Date: Nov 26, 2019 1:23 PM Saved By: CHJS

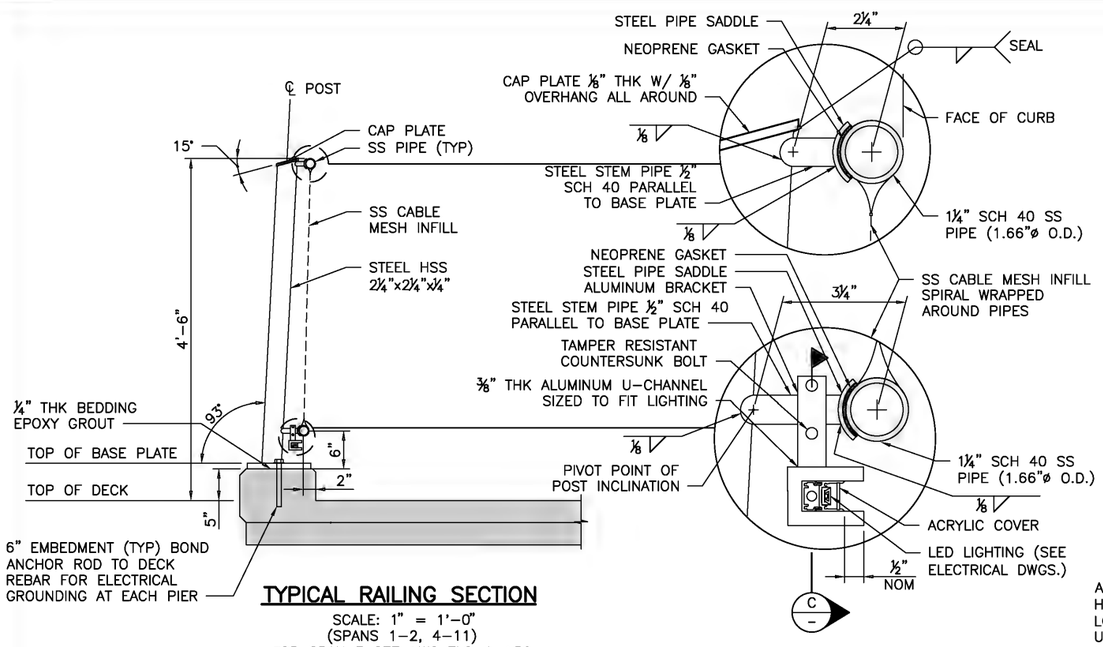

TYPICAL RAILING SECTION

SCALE: 1" = 1'-0"
(SPANS 1-2, 4-11)
FOR SPAN 3 SEE DWG TLC-A-152

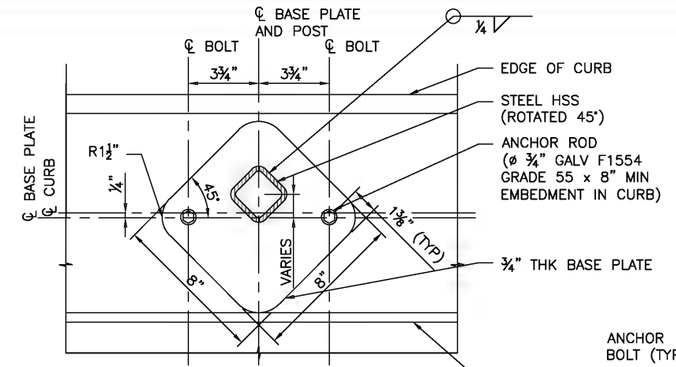

RAILING BASE PLATE ON STRUCTURE

SCALE: 3" = 1'-0"

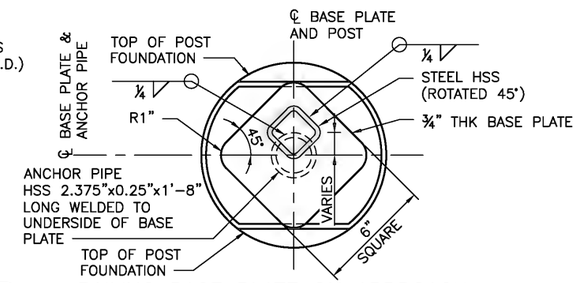

RAILING BASE PLATE ON APPROACH

SCALE: 3" = 1'-0"

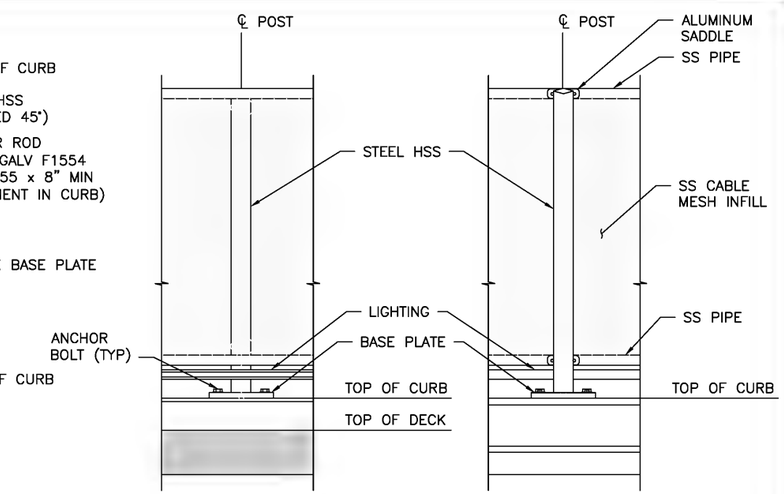

INSIDE VIEW (B)

SCALE: 1" = 1'-0"

OUTSIDE VIEW (A)

SCALE: 1" = 1'-0"

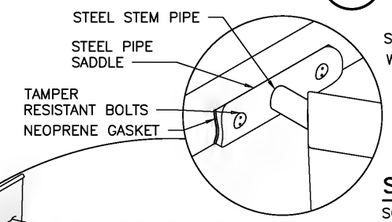

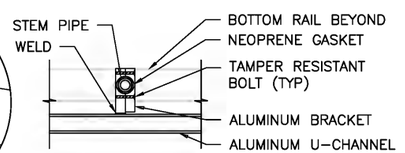

SECTION (C)

SCALE: 3" = 1'-0"

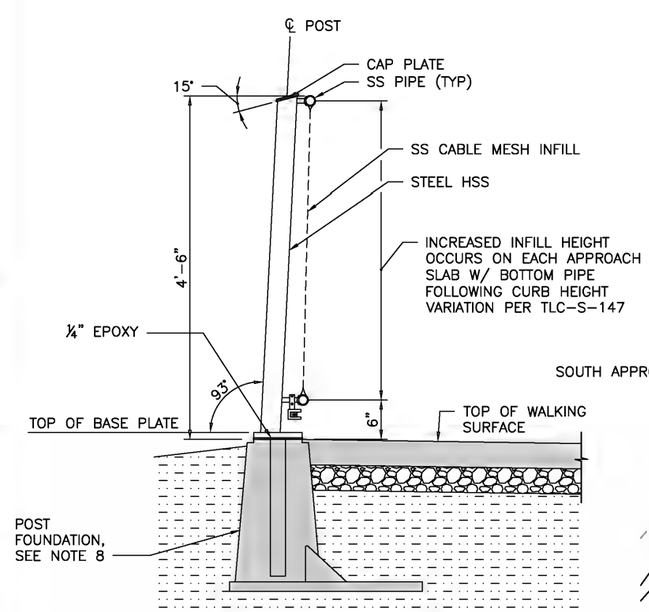

RAILING ON APPROACH SECTION

SCALE: 1" = 1'-0"

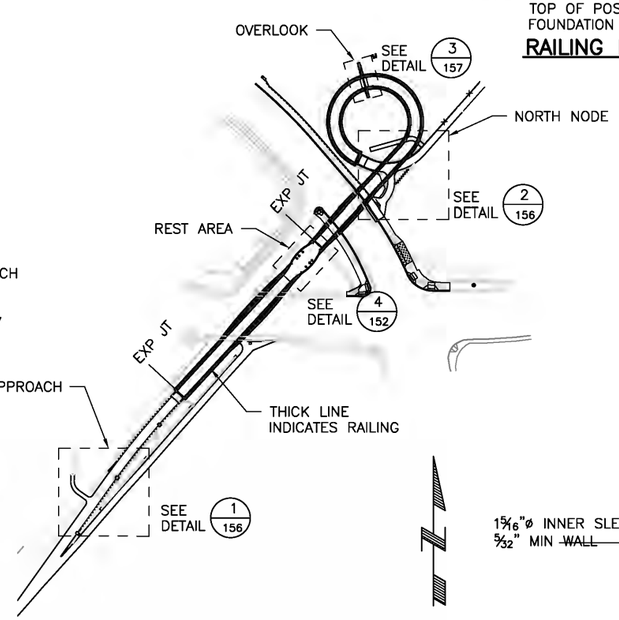

RAILING KEY PLAN

SCALE: N.T.S.

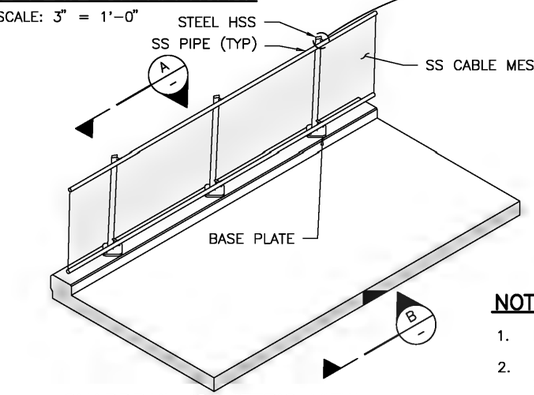

GUARDRAIL ISOMETRIC VIEW

SCALE: N.T.S.
(LIGHTING NOT SHOWN)

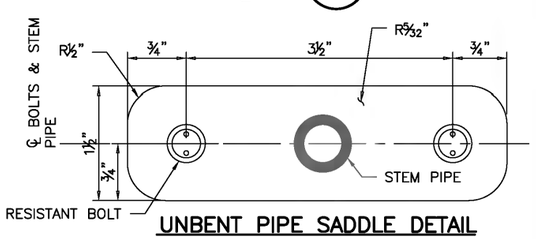

UNBENT PIPE SADDLE DETAIL

SCALE: 1:1

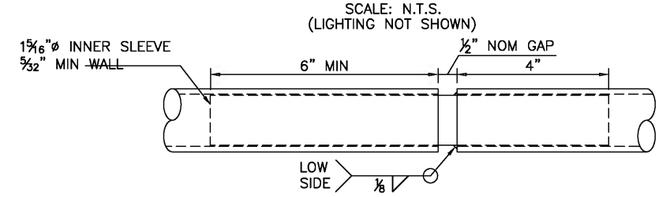

RAILING PIPE SPLICE DETAIL

SCALE: 6" = 1'-0"

NOTES:

1. FOR GENERAL STRUCTURAL NOTES, SEE DWG TLC-S-101.
2. ALL STEEL POSTS, BASE PLATES, CAP PLATES, STEM PIPES AND SADDLES SHALL BE PAINTED. ALL ALUMINUM BRACKETS AND CHANNELS TO BE PAINTED.
3. STAINLESS STEEL PIPES TO HAVE A BRUSHED FINISH AND SHALL BE CURVED TO FOLLOW FACE OF CURB, UNO.
4. ALL TAMPER RESISTANT BOLTS SHALL BE STAINLESS STEEL.
5. ALL ENLARGED DETAILS ARE AT SCALE: 6" = 1'-0".
6. POSTS ON BRIDGE ARE COINCIDENT WITH FLOOR-BEAM/END-BEAM CENTERLINE EXCEPT AT EXPANSION JOINTS, OVERLOOK, OR OTHERWISE STATED. INTERMEDIATE POSTS ARE CENTERED BETWEEN BEAMS.
7. STAINLESS STEEL CABLE MESH INFILL SHALL BE CARL STAHL X-TEND OR APPROVED EQUIVALENT.
8. POST FOUNDATION SHALL BE SLEEVE-IT BY STRATA FILLED WITH CONCRETE CLASS 3000, OR APPROVED EQUIVALENT.

CITY OF KIRKLAND
DEPARTMENT OF PUBLIC WORKS
123 FIFTH AVENUE KIRKLAND, WA 98033
(425) 587-3800 www.kirklandwa.gov

NO.	DATE	BY	APPR.	REVISION
0	2019/12/06	SM	EB	ISSUE FOR BID

COWI VIA

APPROVED BY:

DATE:

E. BIRKHAUSER 2019/12/06 DESIGNED BY: DATE
C. JENSEN 2019/12/06 DRAWN BY: DATE
G. BALL 2019/12/06 CHECKED BY: DATE

CITY OF KIRKLAND
TOTEM LAKE CONNECTION

TYPICAL RAILING

SHEET: TLC-A-155
SCALE: AS SHOWN
FILENAME: A088367-A-153-157.dwg

File: D:\Projectwise\CDW\WD301252\A088357-A-153-157.dwg Save Date: Nov 26, 2019 1:23 PM Saved By: CHJS

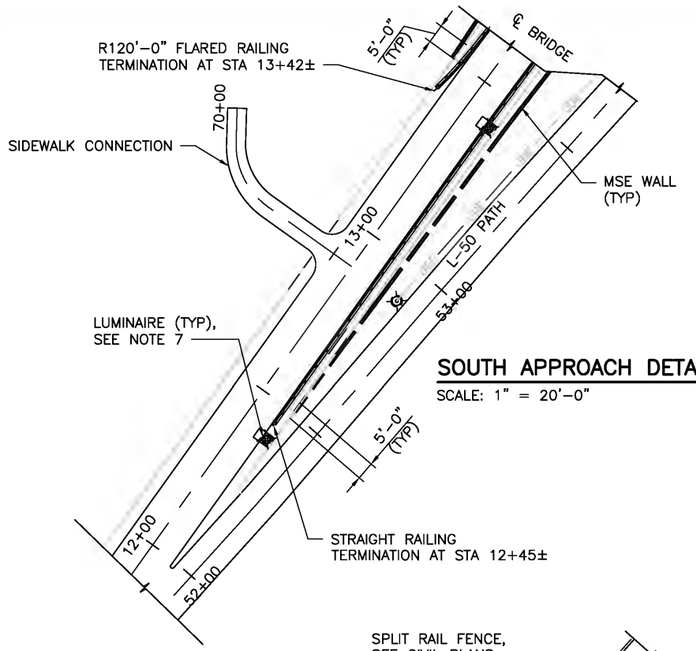

SOUTH APPROACH DETAIL (1/155)

SCALE: 1" = 20'-0"

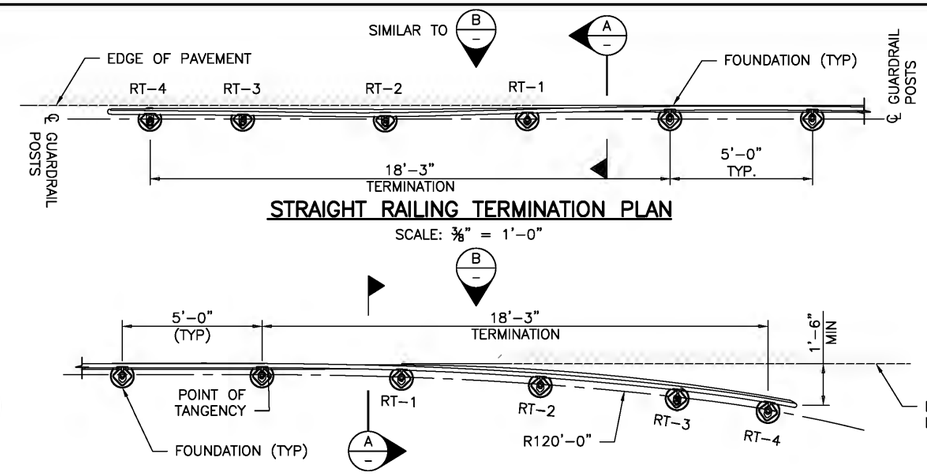

STRAIGHT RAILING TERMINATION PLAN

SCALE: ⅜" = 1'-0"

FLARED RAILING TERMINATION PLAN

SCALE: ⅜" = 1'-0"
(CURVATURE OF TRAIL NOT REPRESENTED)

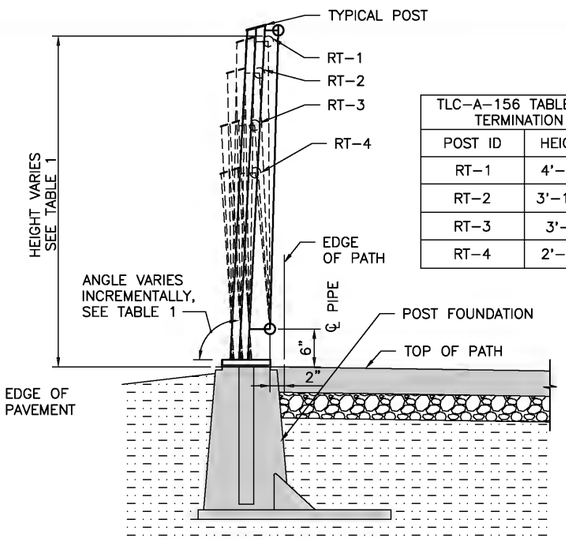

TLC-A-156 TABLE 1: RAILING TERMINATION POSTS		
POST ID	HEIGHT	ANGLE
RT-1	4'-4¼"	91°
RT-2	3'-11¼"	89°
RT-3	3'-3"	87°
RT-4	2'-7½"	86°

SECTION (A/–)

SCALE: 1" = 1'-0"

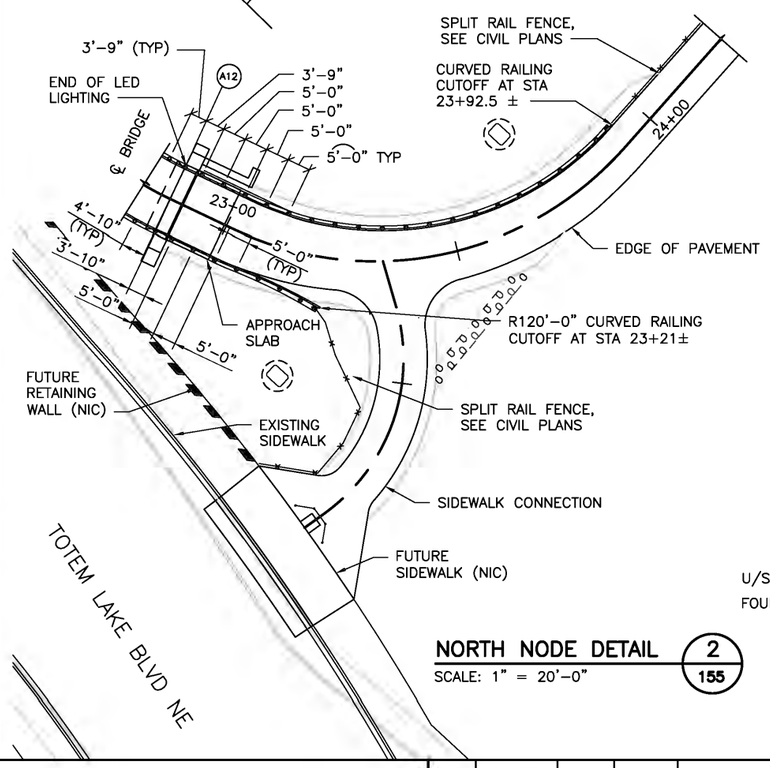

NORTH NODE DETAIL (2/155)

SCALE: 1" = 20'-0"

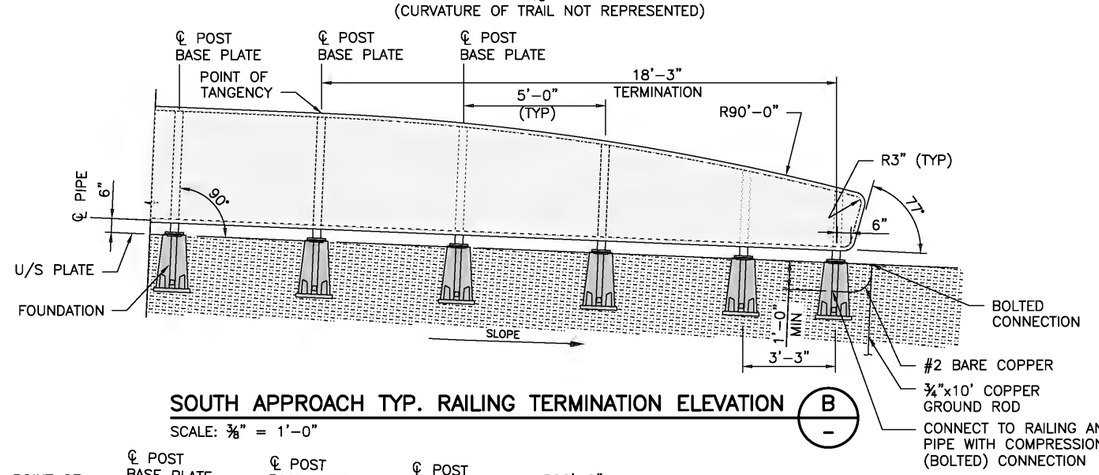

SOUTH APPROACH TYP. RAILING TERMINATION ELEVATION (B/–)

SCALE: ⅜" = 1'-0"

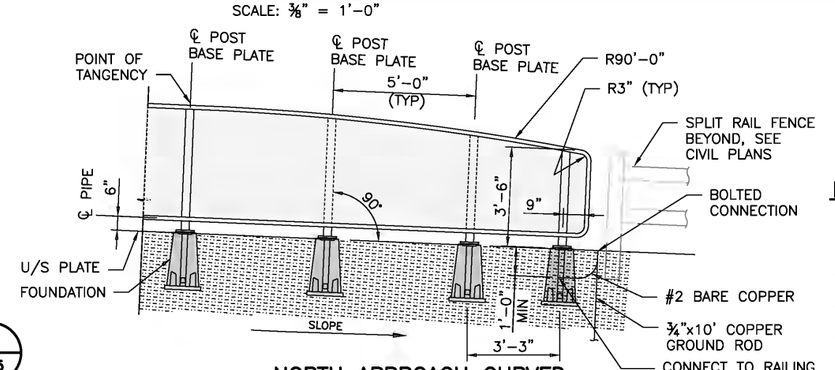

NORTH APPROACH CURVED RAILING CUTOFF DETAIL

SCALE: ⅜" = 1'-0"

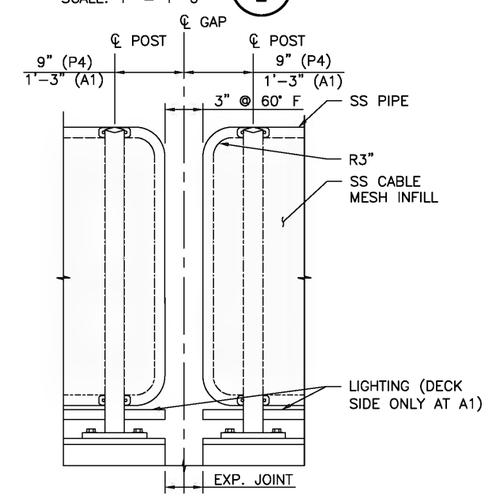

EXPANSION JOINT DETAIL

SCALE: 1" = 1'-0"

NOTES:

1. FOR GENERAL STRUCTURAL NOTES, SEE DWG TLC-S-101.
2. SEE NOTES ON DWG TLC-A-155.
3. ALL ENLARGED DETAILS ARE AT SCALE: 2" = 1'-0".
4. RAILING PIPE SHALL BE CURVED (NOT CHORDED) THROUGHOUT.
5. RAILING PIPE SPLICES LOCATED BY FABRICATOR AS REQUIRED WITH MIN DISTANCE BETWEEN SPLICES OF 20-FT.
6. FABRICATOR SHALL FINALIZE RAILING TERMINATION GEOMETRY FOR APPROVAL BY ENGINEER.
7. FOR LUMINAIRE LOCATIONS, SEE DWG TLC-S-105 AND ELECTRICAL DWGS. AVOID CONFLICT BETWEEN LUMINAIRE AND RAILING FOUNDATIONS; ADJUST AS REQUIRED.

CITY OF KIRKLAND
DEPARTMENT OF PUBLIC WORKS
123 FIFTH AVENUE KIRKLAND, WA 98033
(425) 587-3800 www.kirklandwa.gov

NO.	DATE	BY	APPR.	REVISION
0	2019/12/06	SM	EB	ISSUE FOR BID

COWI
VIA

APPROVED BY:

DATE:

DESIGNED BY: E. BIRKHAUSER	DATE: 2019/12/06	
DRAWN BY: C. JENSEN	DATE: 2019/12/06	
CHECKED BY: G. BALL	DATE: 2019/12/06	

CITY OF KIRKLAND
TOTEM LAKE CONNECTION

RAILING TERMINATION

SHEET: TLC-A-156
SCALE: AS SHOWN
FILENAME: A088367-A-153-157.dwg

File: D:\Projectwise\COWI\d0301252\A088367-A-153-157.dwg Save Date: Nov 26, 2019 1:23 PM Saved By: CHJS

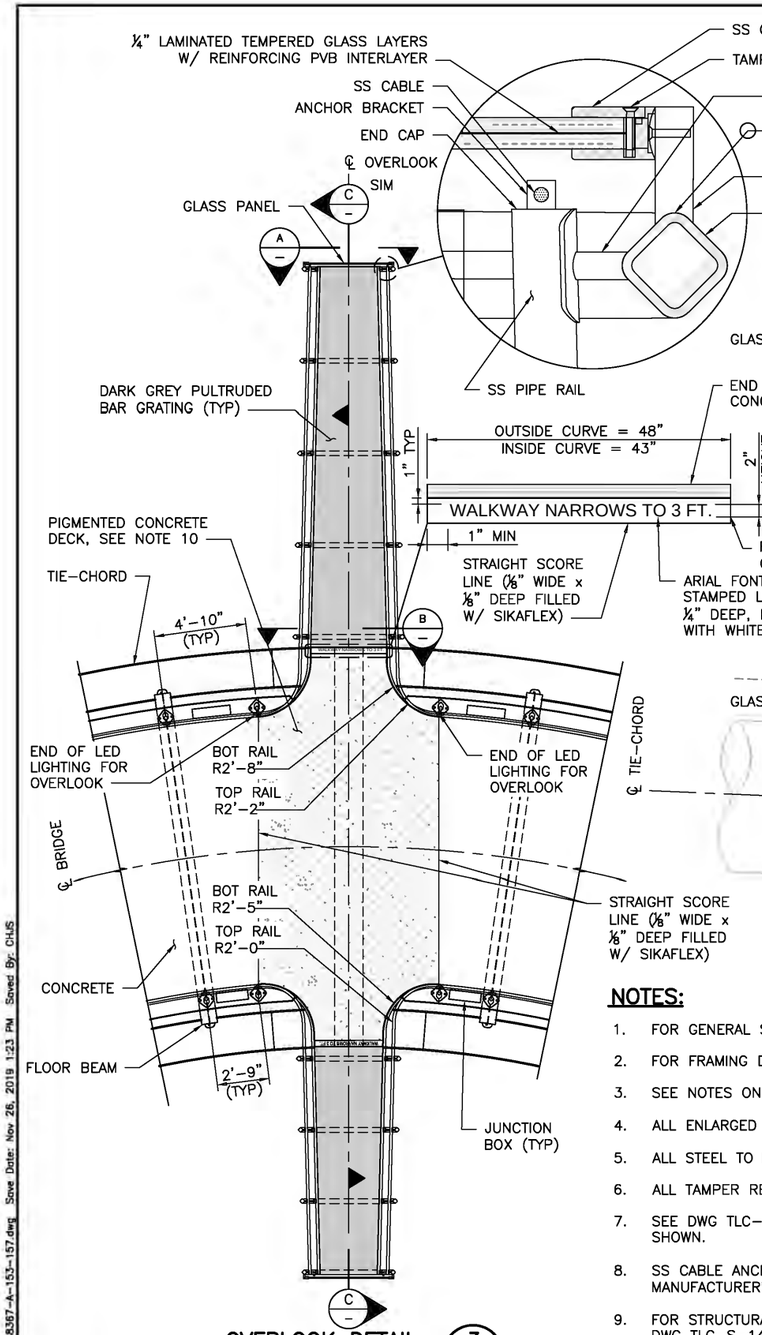

OVERLOOK DETAIL 3/155

SCALE: ¼" = 1'-0"

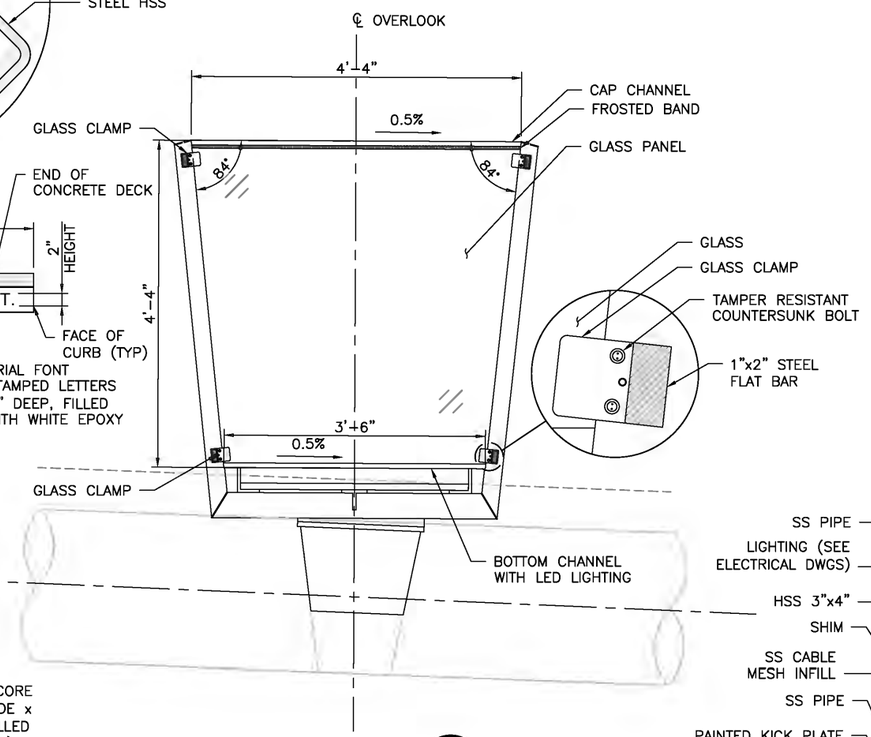

ELEVATION A/–

SCALE: 1" = 1'-0"

*** NOTE:**

SEE TYPICAL RAILING SECTION ON SHEET TLC-A-155 FOR DETAILS.

NOTES:

1. FOR GENERAL STRUCTURAL NOTES, SEE DWG TLC-S-101.
2. FOR FRAMING DETAILS SEE DWG TLC-S-140.
3. SEE NOTES ON DWG TLC-S-152.
4. ALL ENLARGED DETAILS ARE AT SCALE: 2" = 1'-0".
5. ALL STEEL TO BE PAINTED.
6. ALL TAMPER RESISTANT BOLTS SHALL BE STAINLESS STEEL.
7. SEE DWG TLC-A-155 FOR TYPICAL RAILING DETAILS NOT SHOWN.
8. SS CABLE ANCHORAGE FOR INFILL SHALL BE ⅜"ø MIN PER MANUFACTURER'S REQUIREMENTS C/W HARDWARE.
9. FOR STRUCTURAL STEEL FRAMING AND GRATING DETAILS SEE DWG TLC-S-141.
10. CIP CONCRETE MIX SHALL BE PIGMENTED DARK GRAY PER SPECIAL PROVISIONS.

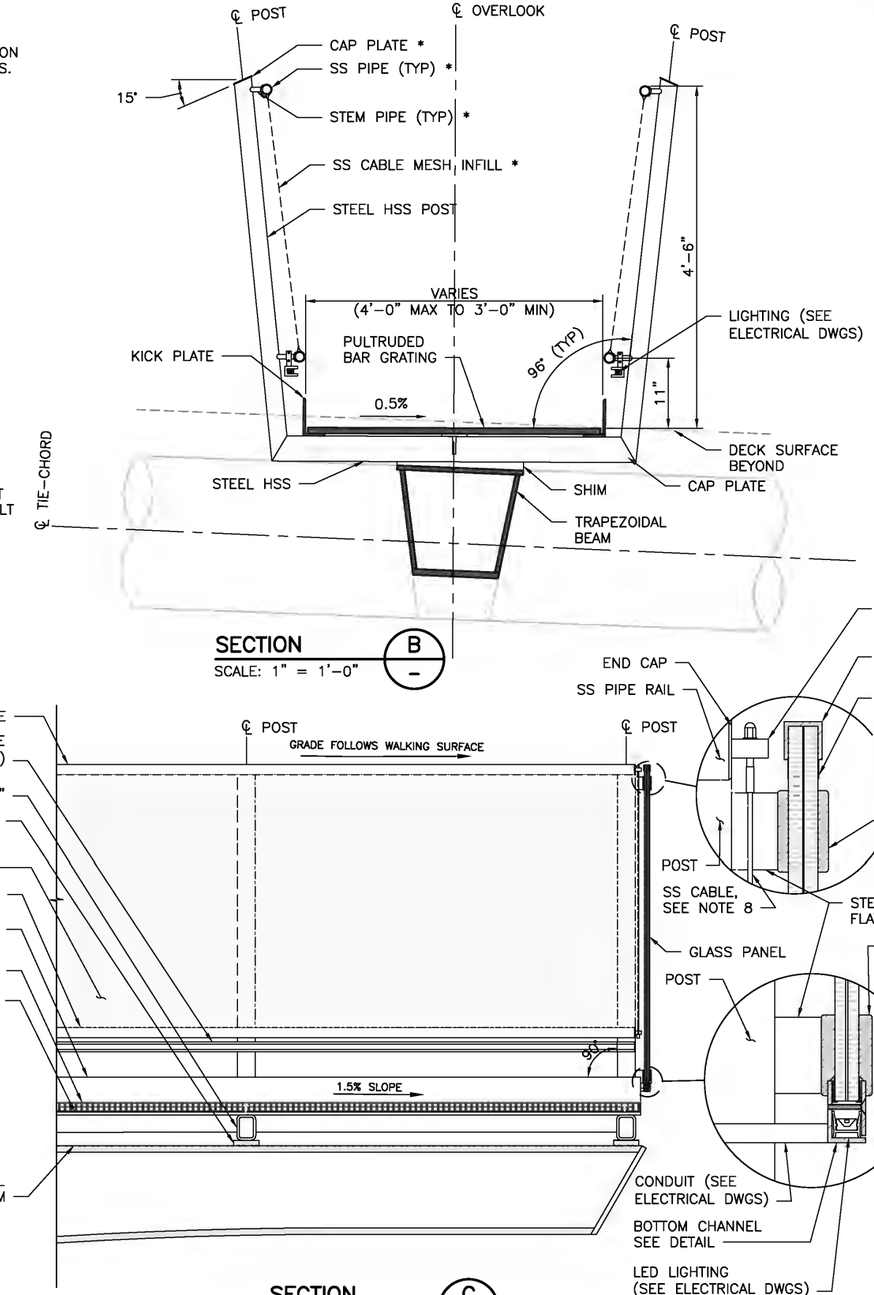

SECTION B/–

SCALE: 1" = 1'-0"

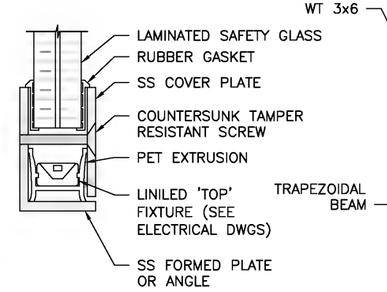

BOTTOM CHANNEL LIGHTING DETAIL

SCALE: 1" = 1'-0"

SECTION C/–

SCALE: 1" = 1'-0"

CITY OF KIRKLAND
DEPARTMENT OF PUBLIC WORKS
123 FIFTH AVENUE KIRKLAND, WA 98033
(425) 587-3800 www.kirklandwa.gov

NO.	DATE	BY	APPR.	REVISION
0	2019/12/06	SM	EB	ISSUE FOR BID

COWI VIA

APPROVED BY:

DATE:

E. BIRKHAUSER 2019/12/06 DESIGNED BY: DATE
C. JENSEN 2019/12/06 DRAWN BY: DATE
G. BALL 2019/12/06 CHECKED BY: DATE

CITY OF KIRKLAND
TOTEM LAKE CONNECTION

OVERLOOK

SHEET: TLC-A-157
SCALE: AS SHOWN
FILENAME: A088367-A-153-157.dwg

File: D:\Projectwise\CUWI\d0301292\A088367-A-153-157.dwg Save Date: Nov 26, 2019 1:23 PM Saved By: CHJS

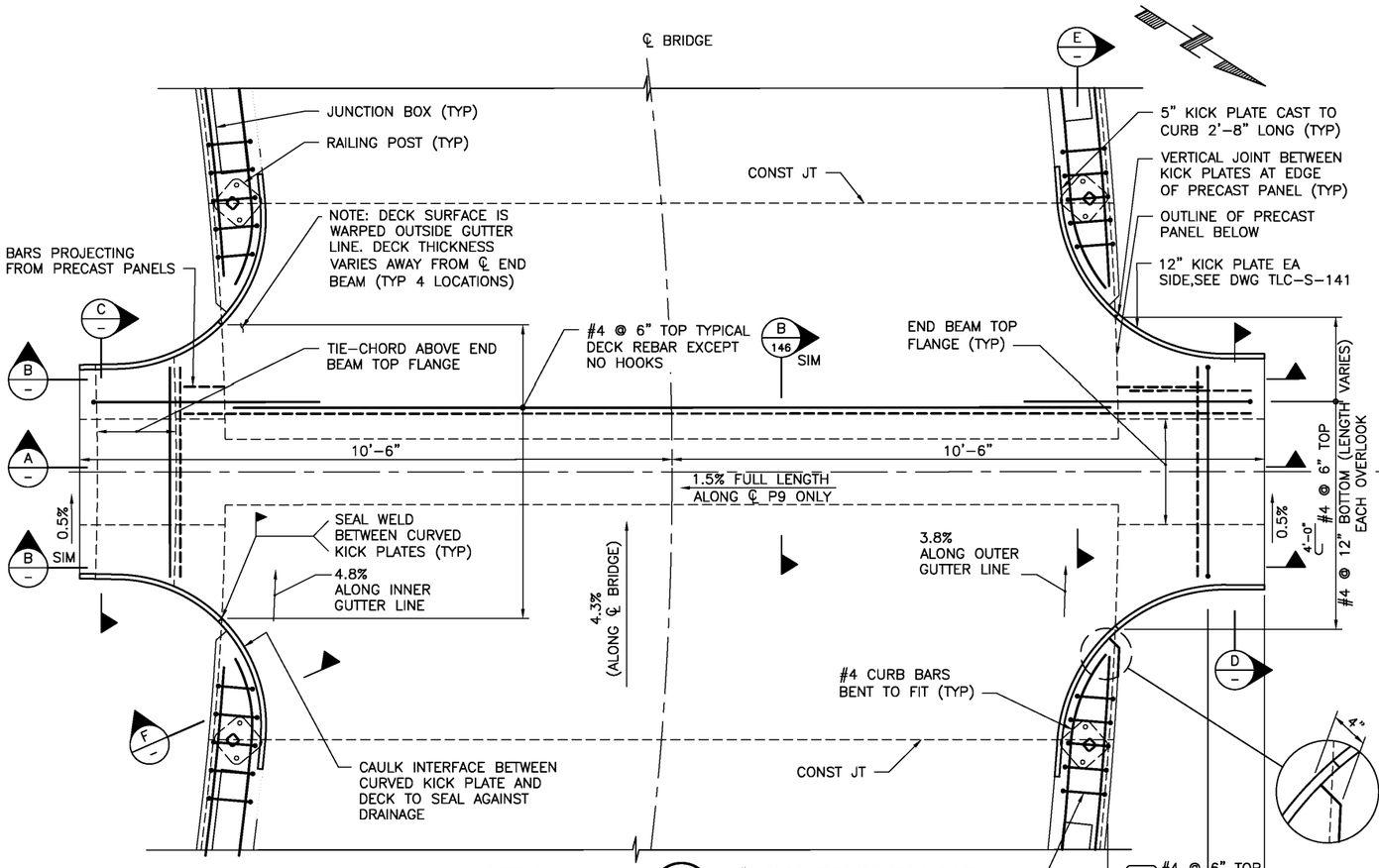

DETAIL 5/146

SCALE: ¾" = 1'-0"
(TYPICAL DECK REBAR NOT SHOWN FOR CLARITY)

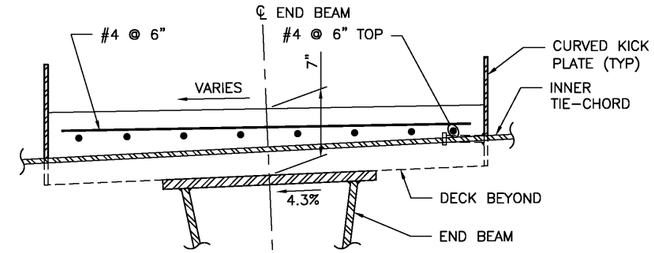

SECTION C

SCALE: 1½" = 1'-0"

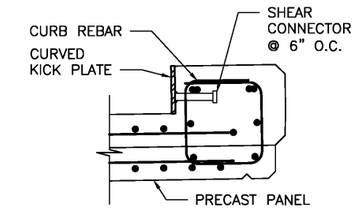

SECTION F

SCALE: 1½" = 1'-0"

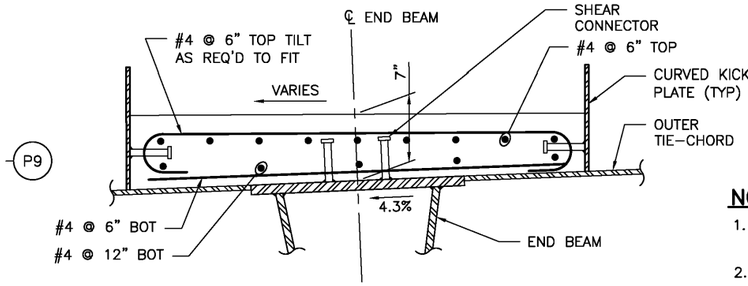

SECTION D

SCALE: 1½" = 1'-0"

NOTES:

1. FOR GENERAL STRUCTURAL NOTES SEE DWG TLC-S-101.
2. SEE DWG TLC-S-145 FOR CURB REINFORCEMENT.
3. CURVED KICK PLATE SHALL BE PAINTED TO MATCH TIE-CHORDS.

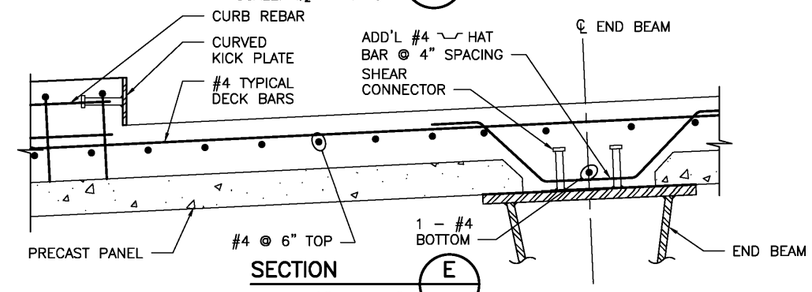

SECTION E

SCALE: 1½" = 1'-0"

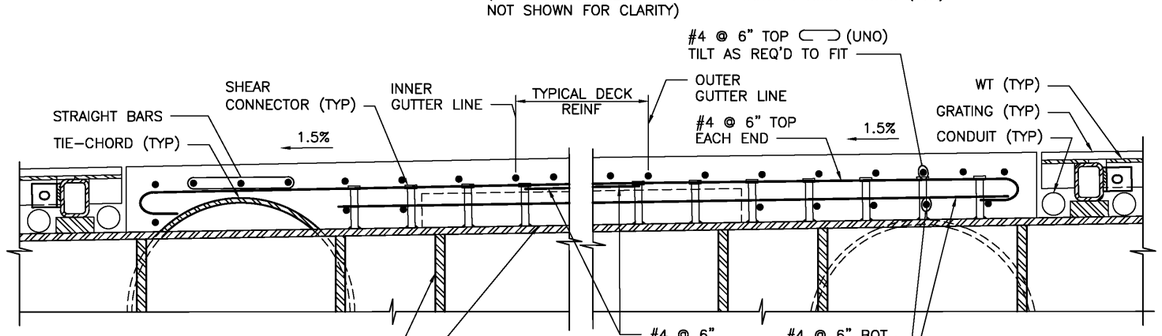

SECTION A

SCALE: 1½" = 1'-0"

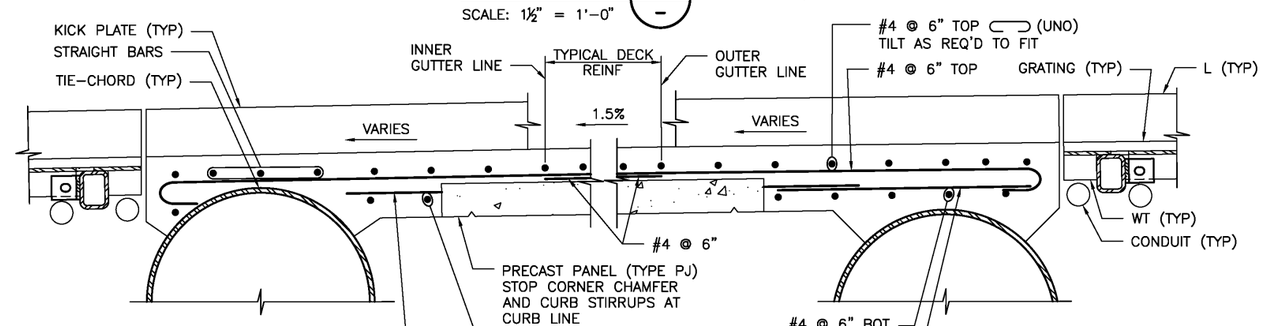

SECTION B

SCALE: 1½" = 1'-0"

CITY OF KIRKLAND
DEPARTMENT OF PUBLIC WORKS
123 FIFTH AVENUE KIRKLAND, WA 98033
(425) 587-3800 www.kirklandwa.gov

NO.	DATE	BY	APPR.	REVISION
0	2019/12/06	CHJS	MWBM	ISSUE FOR BID

MATTHEW D. BACHMAN — STATE OF WASHINGTON — STRUCTURAL ENGINEER — PROFESSIONAL ENGINEER

COWI

APPROVED BY:

DATE:

SCVA 2019/12/06 — DESIGNED BY: DATE
CHJS 2019/12/06 — DRAWN BY: DATE
MWBM 2019/12/06 — CHECKED BY: DATE

CITY OF KIRKLAND
TOTEM LAKE CONNECTION

OVERLOOK – CIP OVERLAY

SHEET: TLC-S-158
SCALE: AS SHOWN
FILENAME: A088367-S-158.dwg

File: D:\Projectwise\COWI\d0301252\A088367-S-158.dwg Save Date: Oct 31, 2019 11:32 AM Saved By: CHJS

SUGGESTED CONSTRUCTION STAGING:

1. CLOSE CKC TRAIL BETWEEN TOTEM LAKE BLVD NE AND 128TH LN NE FOR CONSTRUCTION DURATION AND CONSTRUCT TEMPORARY TRAIL DETOUR SOUTH OF NE 124TH ST ALONG EAST EDGE OF CKC ROW.
2. INSTALL DETOUR ROUTES FOR CKC TRAIL CLOSURE AND TEMPORARY FENCING INCLUDING HIGH VISIBILITY FENCING
3. INSTALL ENVIRONMENTAL PROTECTION & TEMPORARY EROSION CONTROL
   a. INSTALL TEMPORARY EROSION CONTROL MEASURES AS SHOWN IN THE PLANS OR APPROVED CONSTRUCTION SWPPP
   b. CONDUCT FISH CHECK (VOLUNTEERS)
   c. CONSTRUCT TEMPORARY PLYWOOD PLATFORMS AROUND DRILLED SHAFT LOCATIONS FOR P8–P10
4. INSTALL TEMPORARY STORM DRAIN BYPASS.
5. PRE–FABRICATE STEELWORK SUBASSEMBLIES IN SHOP. PRIME AND PAINT, MASKING OFF FIELD SPLICE LOCATIONS. FABRICATE PRECAST PANELS AT PLANT.

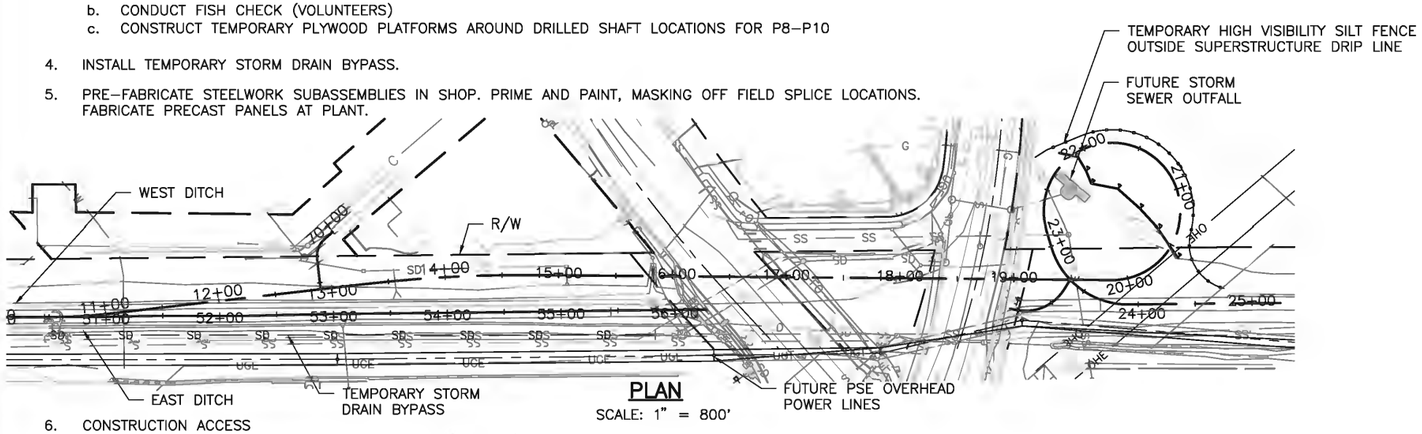

PLAN
SCALE: 1" = 800'

6. CONSTRUCTION ACCESS
   a. SOUTH APPROACH ACCESS FROM 120TH PL NE AND/OR 120TH AVE NE. ACCESS FROM NE 124TH ST SHALL BE LIMITED TO OFF–PEAK HOURS AS APPROVED BY COK.
   b. TRAFFIC ISLAND ACCESS FROM SLIP LANE OFF TOTEM LAKE BLVD NE
   c. LOOP RAMP ACCESS FROM TOTEM LAKE BLVD OR 128TH LN NE
   d. UTILIZING THE TRAIL BED FOR TRUCK ACCESS
      - TRAIL MUST BE MAINTAINED IN WORKING CONDITION FOR USERS THROUGHOUT CONSTRUCTION OUTSIDE OF CONSTRUCTION AREAS
      - TRAIL SHALL BE RETURNED TO EXISTING CONDITION AFTER CONSTRUCTION
   e. BENCH AN ACCESS ROAD ALONG THE SLOPE OF THE CKC TRAIL TO THE CENTER OF THE LOOP RAMP FROM THE NORTHEAST, OUTSIDE OF WETLANDS
   f. COULD USE HOG FUEL WITH TIMBER MATS FOR ACCESS INTO THE WETLANDS FOR FOUNDATION CONSTRUCTION.
   g. CONTRACTOR TO COORDINATE WITH KCWTD REGARDING LOADING ABOVE OR ADJACENT TO SEWER LINES. LOADS IMPARTED ON THE SEWERS SHALL NOT EXCEED NORMAL HIGHWAY LOADING.
   h. PROTECT STORM DRAIN OUTFALL NEAR PIER 11 AND INSTALL TEMPORARY WORKS TO FACILITATE ACCESS.
   i. CONTRACTOR TO PROTECT NUD SANITARY SEWER MANHOLE ADJACENT TO ABUTMENT A12 IN ACCORDANCE WITH NUD REQUIREMENTS.

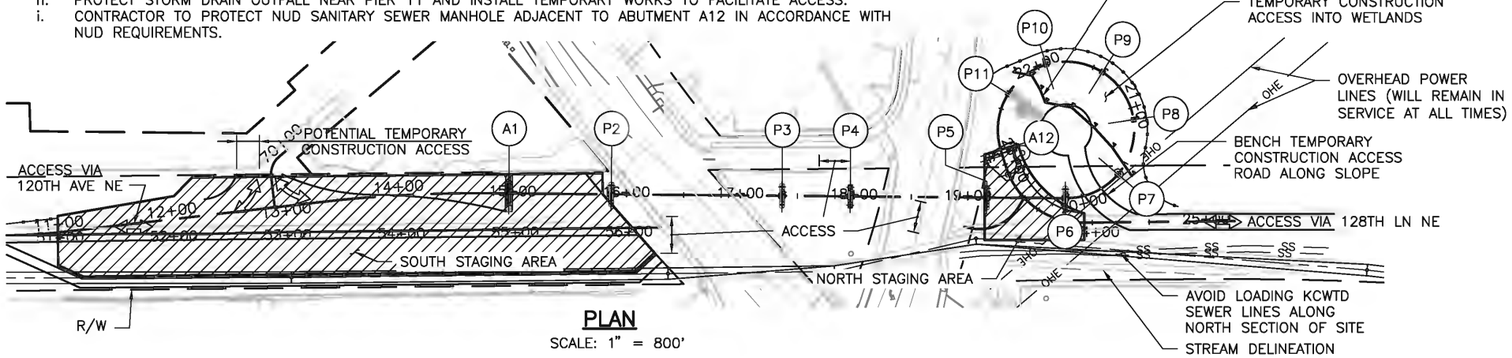

PLAN
SCALE: 1" = 800'

7. CLEAR DESIGNATED TREES ACROSS THE SITE AND STOCKPILE MATERIAL FOR RESTORATION AS REQUIRED. CLEAR AND GRUB REMAINDER OF DESIGNATED AREAS PER SPECIAL PROVISIONS.
8. CONSTRUCT ABUTMENTS A1 & A12 AND PIERS P2 – P6, SEE DWG TLC–S–122 & TLC–S–123.
   a. CONDUCT PRE & POST–CONSTRUCTION SEWER SCOPE OF NUD SEWER LINES IN THE VICINITY OF P11 AND A12
   b. POTHOLE SEWER PIPE LOCATIONS ADJACENT TO P11
   c. COMPLY WITH CONSTRUCTION CLEARANCES FROM THE PSE AND SCL OVERHEAD POWER LINES
   d. VERIFY UTILITIES NEAR P2, P3, P4
   e. CONSTRUCT DRILLED SHAFTS AND PILE CAPS
   f. CONSTRUCT REMAINDER OF PIERS AND ABUTMENTS
9. PREPARE STEEL ASSEMBLY STAGING AREAS
   a. GRADE THE AREA SOUTH OF P2 TO UTILIZE AS A STEEL ASSEMBLY AREA FOR ROADWAY SPANS, AKA SOUTH STAGING AREA
   b. GRADE THE AREA NORTH OF P5 TO UTILIZE AS A STEEL ASSEMBLY AREA FOR LOOP RAMP SPANS, AKA NORTH STAGING AREA
10. ERECTION SEQUENCE OF SPANS 2–11
   a. PRIOR TO STEELWORK ASSEMBLY, SUBMIT PROPOSED ERECTION SEQUENCE TO EOR FOR REVIEW AND APPROVAL.
   b. SPAN 4
      - DELIVER & ASSEMBLE SPAN 4 STEELWORK SUBASSEMBLIES IN SOUTH STAGING AREA (SEE DWG TLC–S–134)
      - DURING NIGHT CLOSURE:
        – UTILIZE HYDRAULIC BOGIES (OR SIMILAR) TO MOVE THE SPAN NORTHEAST ALONG THE CENTERLINE OF THE CKC CORRIDOR, ACROSS NE 124TH ST, ACROSS THE SLIP LANE, AND ACROSS TOTEM LAKE BLVD NE

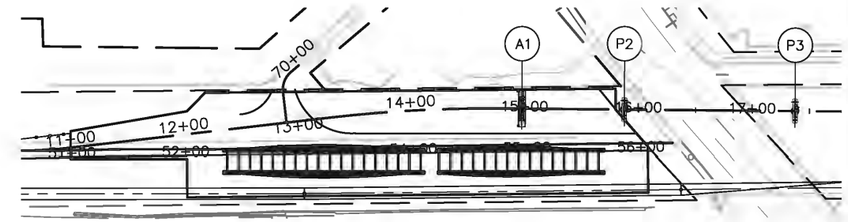

PLAN
SCALE: 1" = 800'

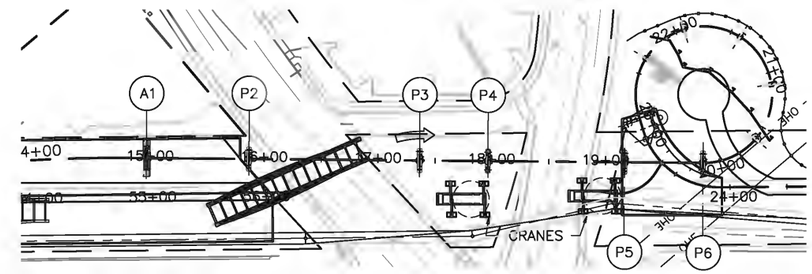

PLAN
SCALE: 1" = 800'

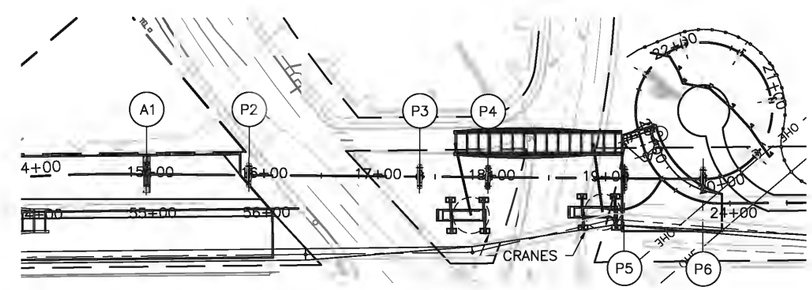

PLAN
SCALE: 1" = 800'

        – POSITION ONE CRANE IN THE TRAFFIC ISLAND AND THE SECOND CRANE WEST OF P5 WITHIN TOTEM LAKE BLVD
        – UTILIZING A TANDEM LIFT, THE CRANES PICK THE SPAN 4 STEELWORK AND SET IT ON THE BEARINGS ON P4 AND P5
      - SECURE FINAL BEARINGS

CITY OF KIRKLAND
DEPARTMENT OF PUBLIC WORKS
123 FIFTH AVENUE KIRKLAND, WA 98033
(425) 587-3800 www.kirklandwa.gov

NO.	DATE	BY	APPR.	REVISION
0	2019/12/06	CHJS	MWBM	ISSUE FOR BID

MATTHEW D. BACHMAN — STATE OF WASHINGTON — STRUCTURAL ENGINEER — PROFESSIONAL ENGINEER

COWI

APPROVED BY:

DATE:

SCVA DESIGNED BY — 2019/12/06 DATE
CHJS DRAWN BY — 2019/12/06 DATE
MWBM CHECKED BY — 2019/12/06 DATE

CITY OF KIRKLAND
TOTEM LAKE CONNECTION

SUGGESTED CONSTRUCTION STAGING

SHEET: TLC–S–165
SCALE: AS SHOWN
FILENAME: A088367–S–165.dwg

File: D:\Projectwise\COWI\d0301252\A088367-S-165.dwg Save Date: Nov 26, 2019 1:21 PM Saved By: CHJS

SUGGESTED CONSTRUCTION STAGING CONTINUED:

10. ERECTION SEQUENCE OF SPANS 2–11 (CONT.)

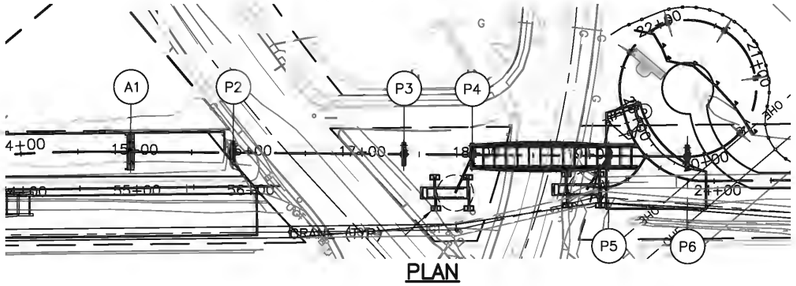

PLAN
SCALE: 1" = 800'

c. SPAN 2
- FOLLOWING OR PRIOR TO PLACEMENT OF SPAN 4 STEELWORK, DELIVER & ASSEMBLE SPAN 2 STEELWORK SUBASSEMBLIES (SEE DWG TLS–S–132) IN SOUTH STAGING AREA
- DURING NIGHT CLOSURE:
  - UTILIZE HYDRAULIC BOGIES (OR SIMILAR) TO MOVE THE SPAN NORTHEAST ALONG THE CENTERLINE OF THE CKC CORRIDOR ACROSS NE 124TH ST
  - POSITION ONE CRANE SOUTH OF NE 124TH ST NEAR P2 AND THE SECOND CRANE IN THE SLIP LANE WEST OF P3
  - UTILIZING A TANDEM LIFT, THE CRANES PICK THE SPAN 2 STEELWORK AND SET IT ON THE BEARINGS ON P2 AND P3
- SECURE FINAL BEARINGS

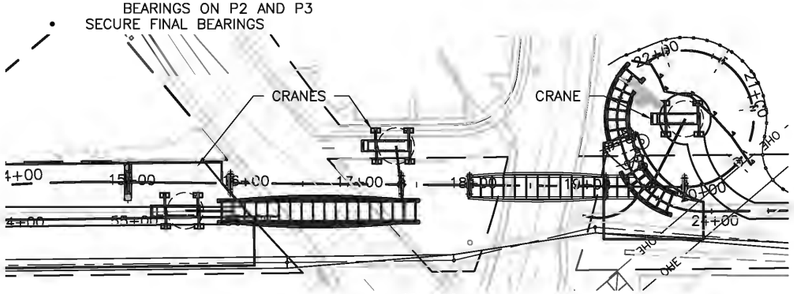

PLAN
SCALE: 1" = 800'

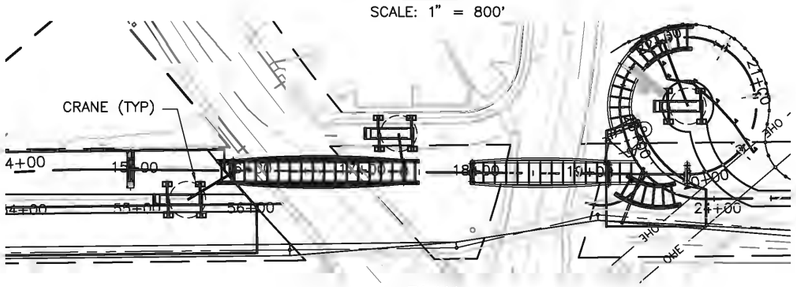

PLAN
SCALE: 1" = 800'

d. CONCURRENT WITH SPAN 4 ASSEMBLY, BEGIN ASSEMBLY OF THE LOOP RAMP STEEL Y–PIERS AND SPANS IN THE NORTH STAGING AREA

- INSTALL THE Y–PIERS WITH LEVELING NUTS ENGAGED BENEATH THE BASE PLATES
- UTILIZING A SINGLE CRANE LOCATED WITHIN THE CENTER OF THE LOOP RAMP, PROGRESSIVELY INSTALL THE STEELWORK OF EACH SPAN OF THE LOOP RAMP STARTING AT THE NORTH ABUTMENT AND WORKING IN REVERSE ORDER
  - CRANE SPAN 11 STEELWORK INTO POSITION
  - SECURE BOLTS AT THE ABUTMENT WALL AND ON THE Y–PIER P11
  - PLACE SPAN 10 STEELWORK AND SECURE TO P10
  - PLACE SPAN 9 STEELWORK AND SECURE TO P9, INCLUDING OVERLOOK
  - INSTALL TEMPORARY BRACING STRUTS TO P9 TO CONTROL LATERAL SWAY OF THE STEELWORK
  - PLACE SPAN 8 STEELWORK AND SECURE TO P8
  - PLACE SPAN 7 UNIT WHILE MAINTAINING SUFFICIENT CLEARANCE TO SCL POWER LINES
  - PLACE SPANS 5 & 6 AS AN ASSEMBLED UNIT TO ALLOW THE CRANE BOOM TO MAINTAIN SUFFICIENT DISTANCE FROM THE SCL POWER LINES, COULD UTILIZE A SPREADER BEAM WITH COUNTERWEIGTH ON OUTRIGGERS AND STABILITY LINES ATTACHED TO EACH END OF UNIT TO SHIFT THE CENTER OF GRAVITY FOR THE PICK
  - CONNECT BOLTED SPLICE AFTER ADJUSTING SPAN 4 END TO REMOVE SAG
  - SECURE FINAL BEARINGS AT PIER P6
  - REMOVE TEMPORARY BRACING STRUTS AT P9

e. ASSEMBLE SPAN 3 STEELWORK IN PLACE USING FALSEWORK IN TRAFFIC ISLAND

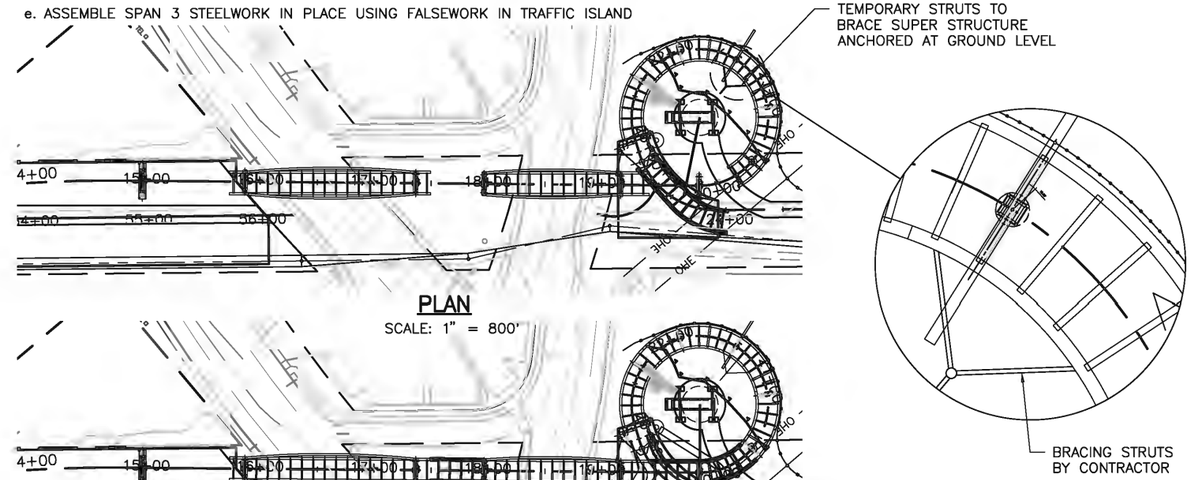

PLAN
SCALE: 1" = 800'

PLAN
SCALE: 1" = 800'

11. ASSEMBLE SPAN 1 STEELWORK & LIFT INTO PLACE ADJUSTING SPAN 2 END BEFORE CONNECTING BOLTED SPLICE TO REMOVE SAG
12. MSE WALL CONSTRUCTION
    a. CONSTRUCT EAST AND WEST MSE WALLS FOR SOUTH APPROACH RAMP
    b. CONSTRUCT NORTH APPROACH MSE WALLS

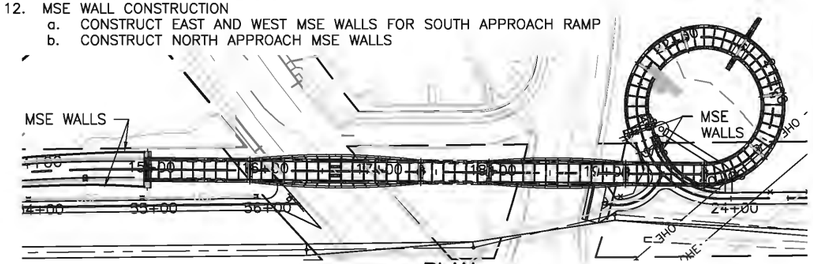

PLAN
SCALE: 1" = 800'

13. CONCURRENT WITH MSE WALL CONSTRUCTION, PLACE PRECAST CONCRETE DECK PANELS ACROSS ALL SPANS FROM A1 TO P4 AND A12 TO P4 (TBC WITH ENGINEER)
14. CIP CONCRETE POUR SEQUENCE IN TWO STAGES
    a. FORM SPANS 3 AND 11 ON FALSEWORK AND ALL CURBS/DECK FASCIA, PLACE REBAR, RAILING ANCHORAGES (ENSURING NO CONFLICTS WITH CONDUITS) AND DECK DRAINS
    b. INSTALL SPILL PROTECTION AROUND LOOP RAMP OVER WETLANDS AND ON SPANS 2 AND SPAN 4
    c. POUR FROM A12 TO P4 FROM LOW TO HIGH ELEVATION
    d. POUR FROM A1 TO P3 FROM LOW TO HIGH ELEVATION
    e. POUR FROM P3 TO P4, APPLYING COLORED PIGMENT TO SURFACE
    f. POUR APPROACH SLABS
15. INSTALL JOINTS, DAMPERS AND RAILING
16. APPLY PIGMENTED SEALER TO A1–P6 AND A12, AND DECK AS DESIGNATED IN PLANS
17. INSTALL LIGHTING, RESTING AREA TREATMENT AND BENCHES
18. REMOVE TEMPORARY CONSTRUCTION ACCESS AND LAYDOWN MATERIALS. FINISH GRADING
19. COMPLETE L–10, L–50, L–60 & L–70 PATHWAYS AND DITCH ALONG L–50
20. RESTORATION
    a. IN–KIND RESTORATION OF CKC TRAIL FROM 120TH ST NE TO 128TH LN NE, FINISHED GRADING & INFILTRATION PONDS
    b. SOIL PREPARATION, LANDSCAPING, AND IRRAGATION. TREE PLANTINGS & SNAGS
    c. REMOVE FENCING

CITY OF KIRKLAND
DEPARTMENT OF PUBLIC WORKS
123 FIFTH AVENUE KIRKLAND, WA 98033
(425) 587-3800 www.kirklandwa.gov

NO.	DATE	BY	APPR.	REVISION
0	2019/12/06	CHJS	MWBM	ISSUE FOR BID

MATTHEW D. BACHMAN — STATE OF WASHINGTON — STRUCTURAL ENGINEER — PROFESSIONAL ENGINEER

COWI

APPROVED BY:

DATE:

SCVA DESIGNED BY: 2019/12/06 DATE
CHJS DRAWN BY: 2019/12/06 DATE
MWBM CHECKED BY: 2019/12/06 DATE

CITY OF KIRKLAND
TOTEM LAKE CONNECTION

SUGGESTED CONSTRUCTION STAGING

SHEET: TLC–S–166
SCALE: AS SHOWN
FILENAME: A088367–S–165.dwg

File: D:\Projectwise\CDWI\d0301252\A088367-S-165.dwg Save Date: Nov 26, 2019 1:21 PM Saved By: CHJS

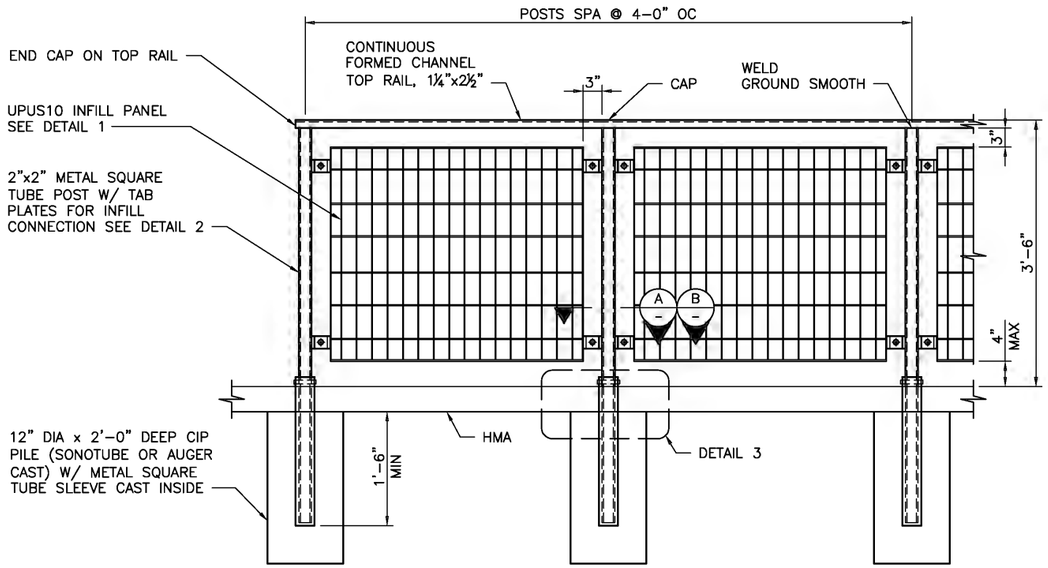

SIDEWALK GUARDRAIL DETAIL

SCALE: 1" = 1'-0"

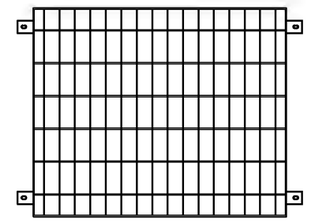

INFILL PANEL DETAIL (1)

SCALE: 1" = 1'-0"

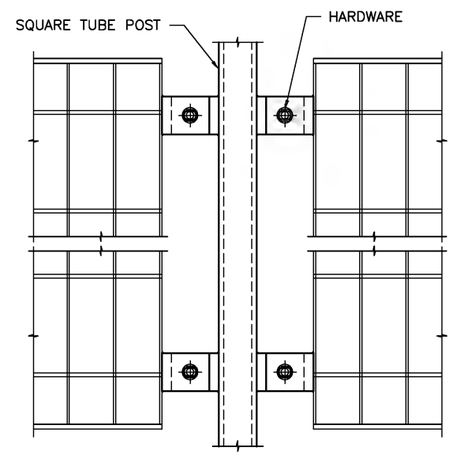

POST DETAIL (2)

SCALE: 3" = 1'-0"

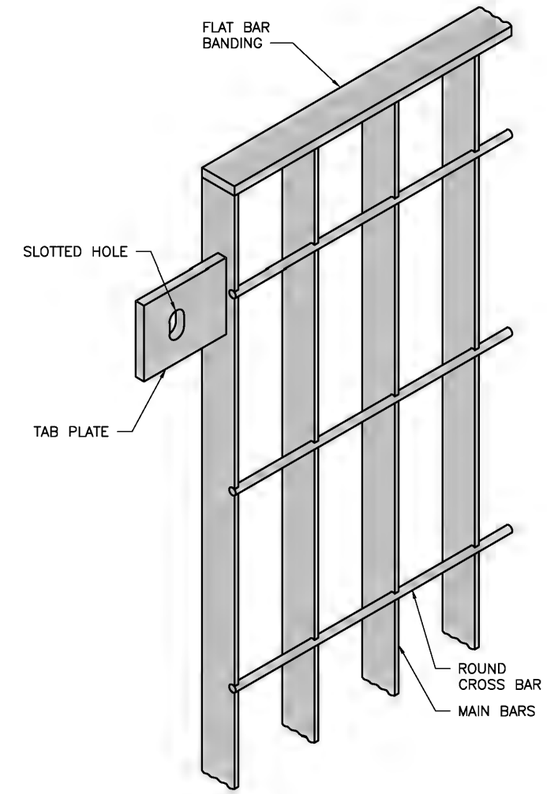

OPUS 10 INFILL PANEL

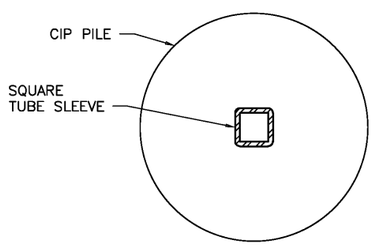

FOUNDATION PLAN

SCALE: 6" = 1'-0"

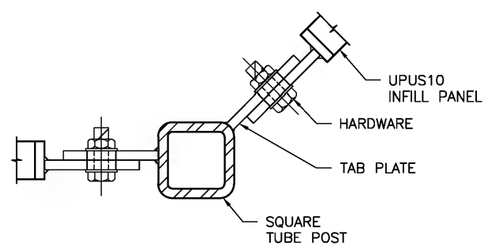

SECTION (A)

SCALE: 6" = 1'-0"
(AT TOTEM LAKE BLVD)

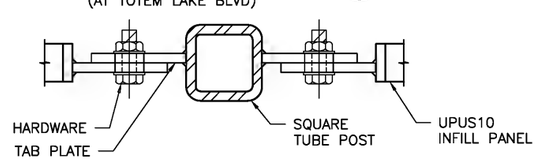

SECTION (B)

SCALE: 6" = 1'-0"
(AT NE 124TH ST)

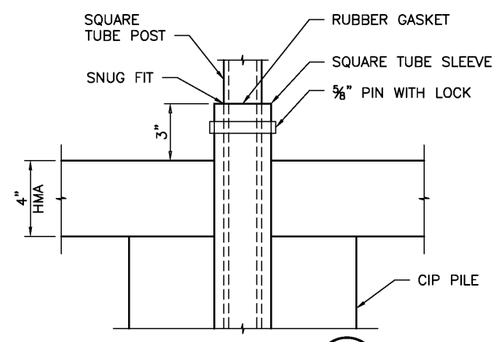

DETAIL (3)

SCALE: 3" = 1'-0"

OPUS10
INFILL PANEL
10-V-ST-D

Presented By Grating Pacific
CODA architectural
Southern California 800.321.4814
Northern California 800.411.7999
Washington 800.343.9959
Oregon 800.942.4041
Arizona 888.316.9301
www.CodaArchitectural.com

NOTES:

1. SIDEWALK GUARDRAIL SHALL BE FABRICATED AND INSTALLED IN ACCORDANCE WITH MANUFACTURER SPECIFICATIONS. SEE SPECIAL PROVISIONS.
2. CIP PILE SHALL USE CONCRETE CLASS 3000.

CITY OF KIRKLAND
DEPARTMENT OF PUBLIC WORKS
123 FIFTH AVENUE KIRKLAND, WA 98033
(425) 587-3800 www.kirklandwa.gov

NO.	DATE	BY	APPR.	REVISION
0	2019/12/06	CHJS	MWBM	ISSUE FOR BID

MATTHEW D. BAUGHMAN — STATE OF WASHINGTON — STRUCTURAL ENGINEER — PROFESSIONAL ENGINEER

COWI

APPROVED BY:

DATE:

MWBM DESIGNED BY:	2019/12/06 DATE
CHJS DRAWN BY:	2019/12/06 DATE
ASIL CHECKED BY:	2019/12/06 DATE

CITY OF KIRKLAND
TOTEM LAKE CONNECTION

SIDEWALK GUARDRAIL DETAILS

SHEET: TLC-S-223
SCALE: AS SHOWN
FILENAME: A088367-S-223.dwg

File: D:\projectwise\cowi\d0301252\A088367-S-223.dwg Save Date: Nov 27, 2019 8:41 AM Saved By: CHJS