Appendix A 10% Drawings

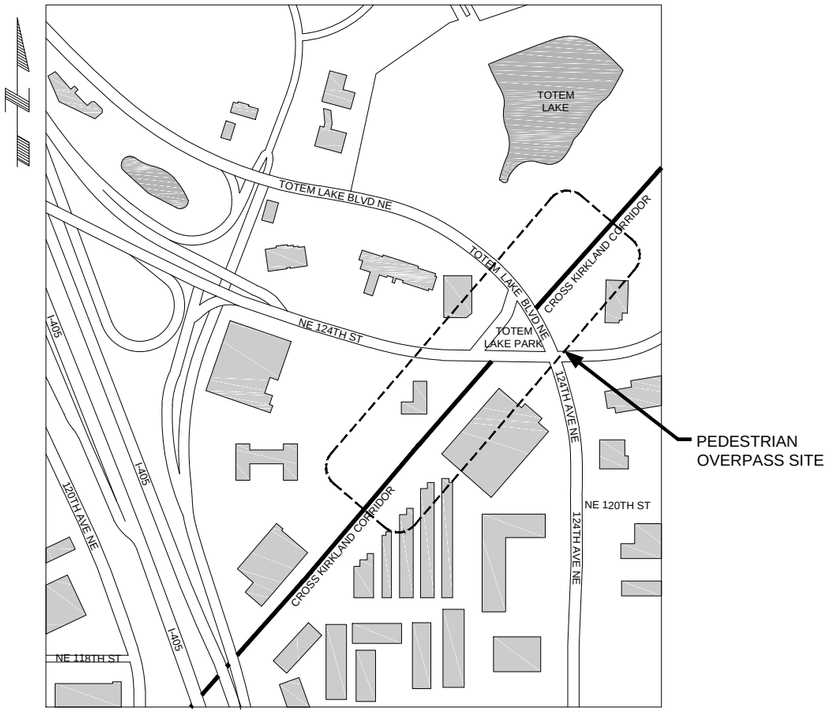

LOCATION MAP

COWI

CROSS KIRKLAND CORRIDOR

City of Kirkland
Cross Kirkland Corridor Trail
Totem Lake Connector
PROJECT No. A088367

10% Submittal

DRAWING INDEX

CONTRACT DRAWINGS:

A088367–S–001	COVER SHEET
A088367–S–002	ALIGNMENT & PROFILE
A088367–S–003	GENERAL ARRANGEMENT APPROACH RAMP
A088367–S–004	GENERAL ARRANGEMENT OPTION A – GATES
A088367–S–005	GENERAL ARRANGEMENT OPTION B – SKIPPING STONE
A088367–S–006	GENERAL ARRANGEMENT OPTION C – HALF ARCHES
A088367–S–007	GENERAL ARRANGEMENT OPTION D – SUSPENDED RING

2017–04–27

DRAWN	CHJS	APPROVED	SCVA
CHECKED	KADI	REVIEWED	SCVA
DRAWING No. A088367–S–001		REV. PA	

File: A088367_COVER.dwg Rev: #### Date: Apr 26, 2017 9:31 AM By: CHJS

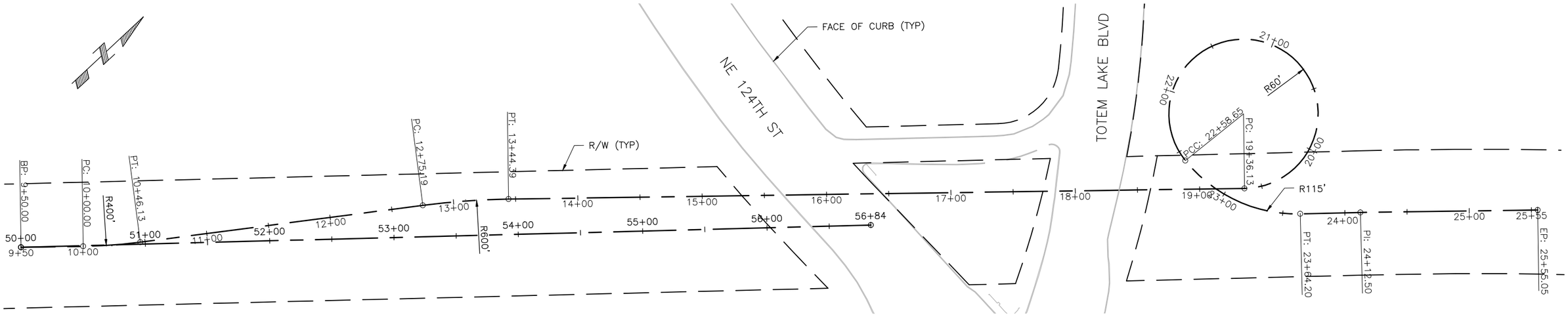

PLAN

SCALE: 1:40

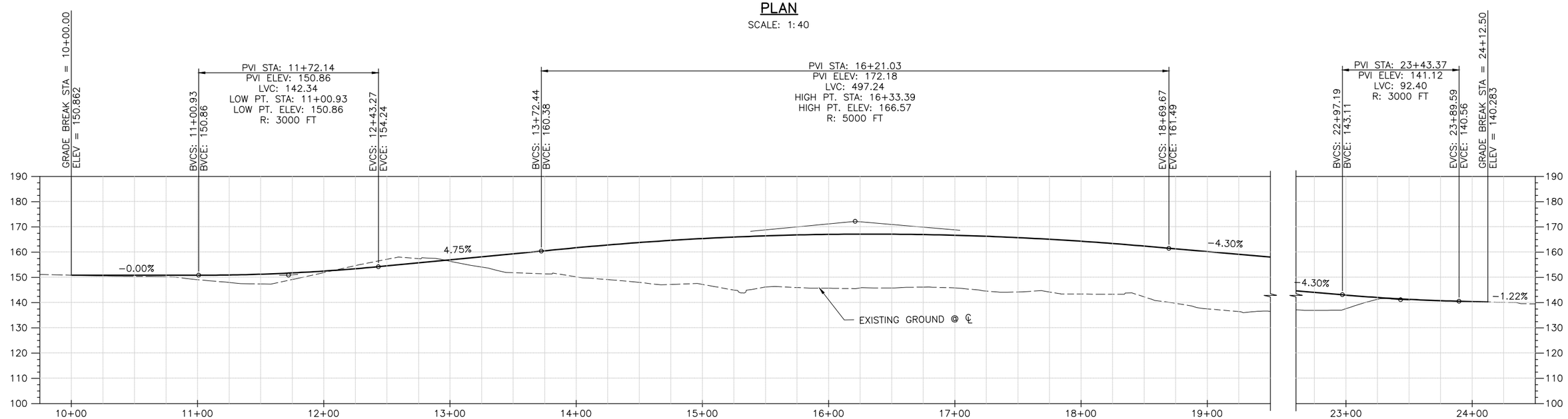

ELEVATION

SCALE: H: 1:40
V: 1:20

PRELIMINARY NOT FOR CONSTRUCTION

REV.	DESCRIPTION	BY	DATE
PA	TS&L	CHJS	2017-04-27

PRIME LOGO/ADDRESS: COWI

DRAWN BY: CHJS	DATE: 2017-04-27		
DESIGN BY: SCVA	DATE: 2017-04-27		
CHECKED BY: KADI	DATE: 2017-04-27		
APPROVED BY: SCVA	DATE: 2017-04-27		

SUB LOGO/ADDRESS:

CLIENT LOGO/ADDRESS: CITY OF KIRKLAND WASHINGTON

PROJECT: CITY OF KIRKLAND
TOTEM LAKE CONNECTOR

SHEET TITLE: ALIGNMENT & PROFILE

DRAWING: A088367-S-002

DATE: 2017-04-27

SCALE: AS SHOWN

SHEET: 02 OF 07

File: C:\pwwork\dklypw2\d0332147\A088367_S-002_ALIGNMENT_GA.dwg Save Date: Apr 24, 2017 5:28 PM Saved By: CHJS

NOTES:

1. ELEVATIONS AND DIMENSIONS IN THESE PLANS ARE CALCULATED FROM A RECENT FIELD SURVEY BY 1ALLIANCE.
2. (NIC) = NOT IN CONTRACT

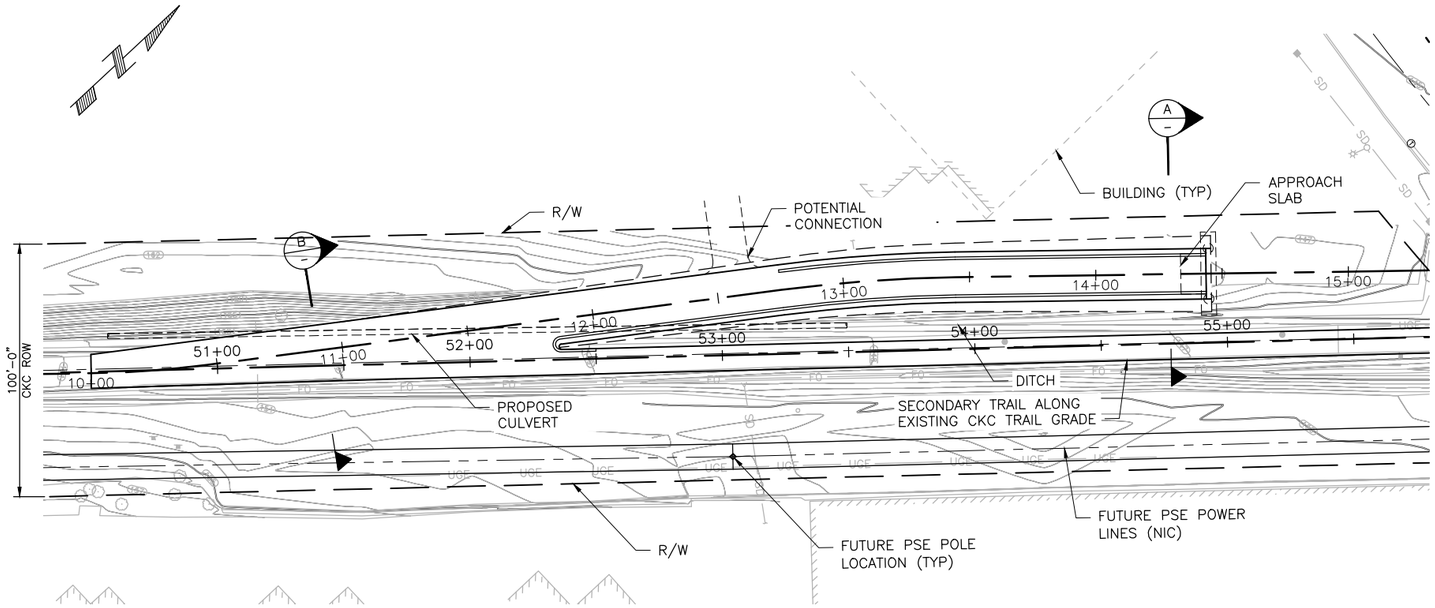

PLAN

SCALE: 1:30

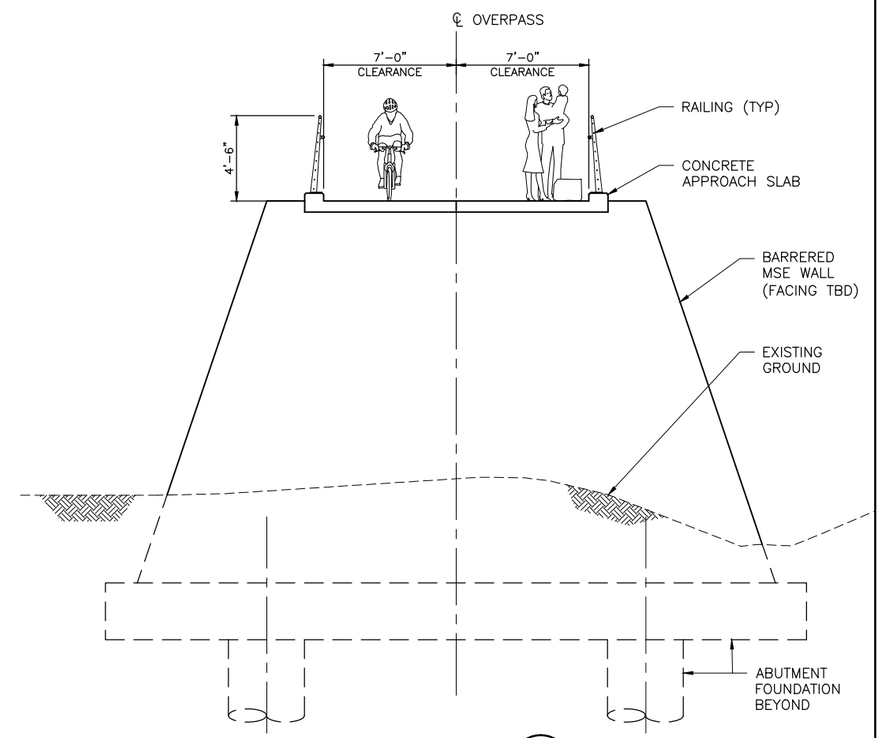

SECTION A

SCALE: 1/4" = 1'-0"

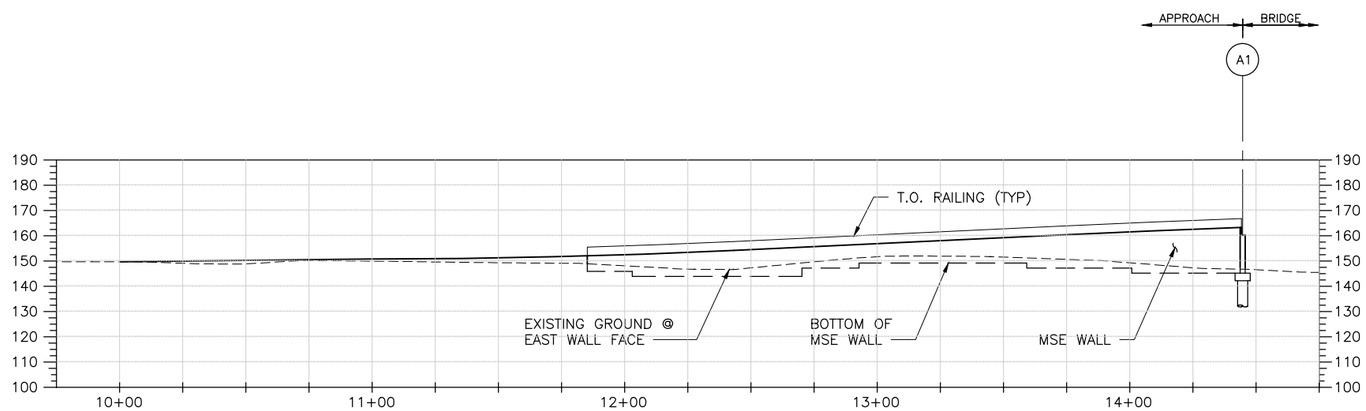

ELEVATION

SCALE: 1:30

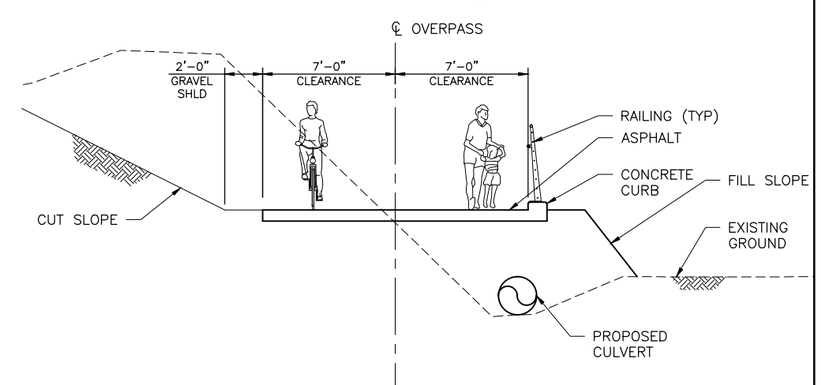

SECTION B

SCALE: 1/4" = 1'-0"

PRELIMINARY NOT FOR CONSTRUCTION

REV.	DESCRIPTION	BY	DATE
PA	TS&L	CHJS	2017-04-27

PRIME LOGO/ADDRESS: COWI

DRAWN BY: CHJS	DATE: 2017-04-27		
DESIGN BY: SCVA	DATE: 2017-04-27		
CHECKED BY: KADI	DATE: 2017-04-27		
APPROVED BY: SCVA	DATE: 2017-04-27		

SUB LOGO/ADDRESS:

CLIENT LOGO/ADDRESS: CITY OF KIRKLAND WASHINGTON

PROJECT: CITY OF KIRKLAND TOTEM LAKE CONNECTOR

SHEET TITLE: GENERAL ARRANGEMENT APPROACH RAMP

DRAWING: A088367-S-003

DATE: 2017-04-27

SCALE: AS SHOWN

SHEET: 03 OF 07

File: C:\pwwork\dklypw2\d0332147\A088367_S-003_APPROACH_GA.dwg Save Date: Apr 25, 2017 10:13 AM Saved By: CHJS

NOTES:

1. ELEVATIONS AND DIMENSIONS IN THESE PLANS ARE CALCULATED FROM A RECENT FIELD SURVEY BY 1ALLIANCE.
2. (NIC) = NOT IN CONTRACT

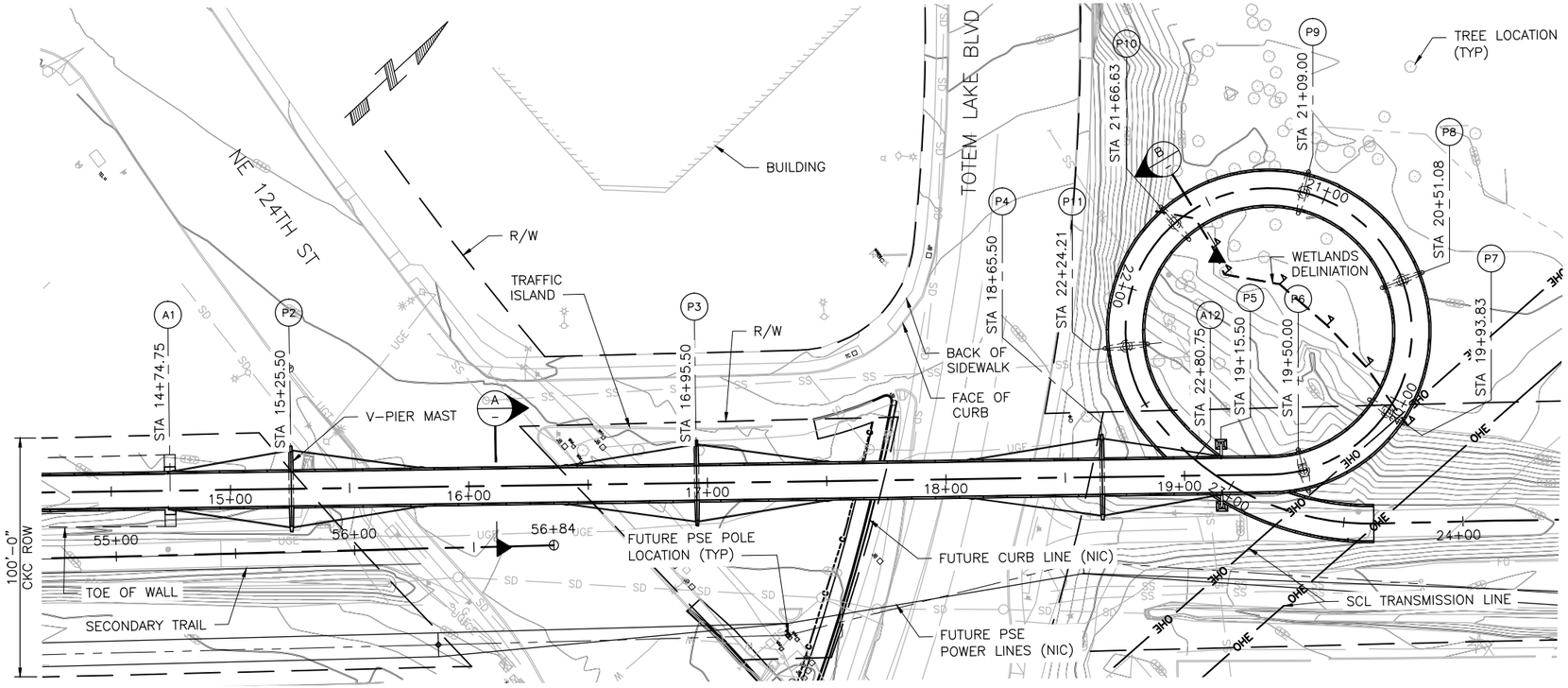

PLAN

SCALE: 1:30

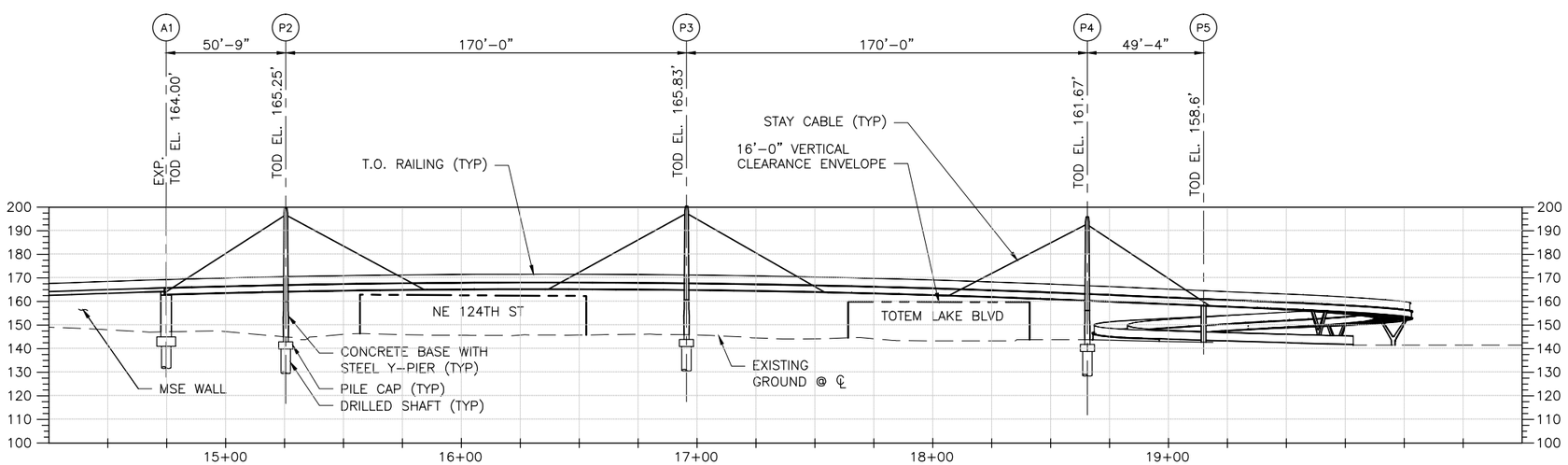

ELEVATION

SCALE: 1:30

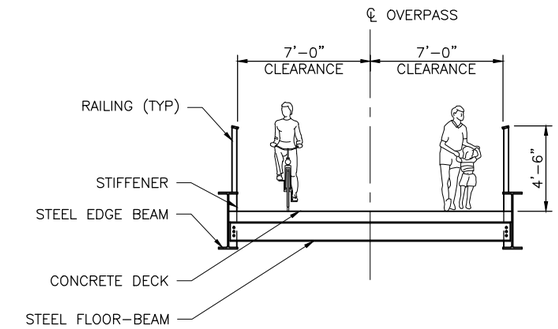

SECTION A

SCALE: 1/4" = 1'-0"

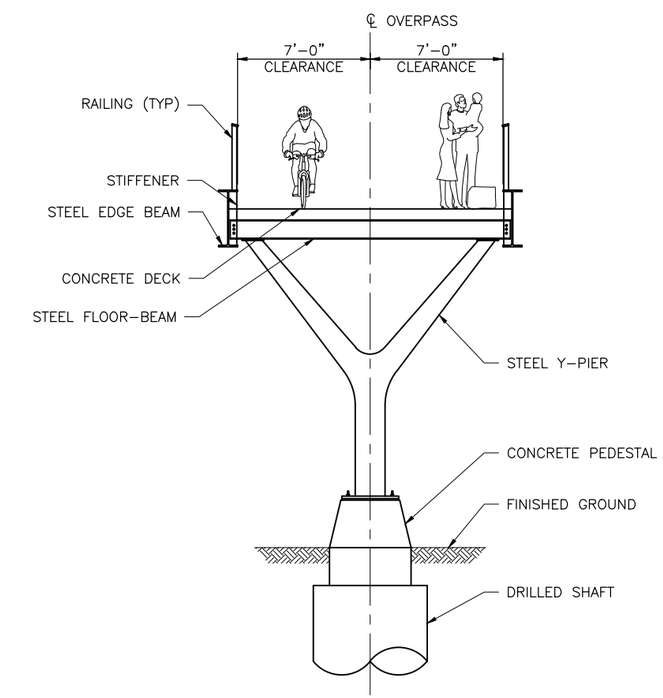

SECTION B

SCALE: 1/4" = 1'-0"

PRELIMINARY NOT FOR CONSTRUCTION

REV.	DESCRIPTION	BY	DATE
PA	TS&L	CHJS	2017-04-27

PRIME LOGO/ADDRESS: COWI

DRAWN BY: CHJS	DATE: 2017-04-27	
DESIGN BY: SCVA	DATE: 2017-04-27	
CHECKED BY: KADI	DATE: 2017-04-27	
APPROVED BY: SCVA	DATE: 2017-04-27	

SUB LOGO/ADDRESS:

CLIENT LOGO/ADDRESS: CITY OF KIRKLAND WASHINGTON

PROJECT: CITY OF KIRKLAND TOTEM LAKE CONNECTOR

SHEET TITLE: GENERAL ARRAGEMENT – OPTION A GATES

DRAWING: A088367-S-004

DATE: 2017-04-27

SCALE: AS SHOWN

SHEET: 04 OF 07

File: C:\pwwork\dklypw2\d0329119\A088367_S-004_OPT-A_GA.dwg Save Date: Apr 24, 2017 5:28 PM Saved By: CHJS

NOTES:

1. ELEVATIONS AND DIMENSIONS IN THESE PLANS ARE CALCULATED FROM A RECENT FIELD SURVEY BY 1ALLIANCE.
2. (NIC) = NOT IN CONTRACT

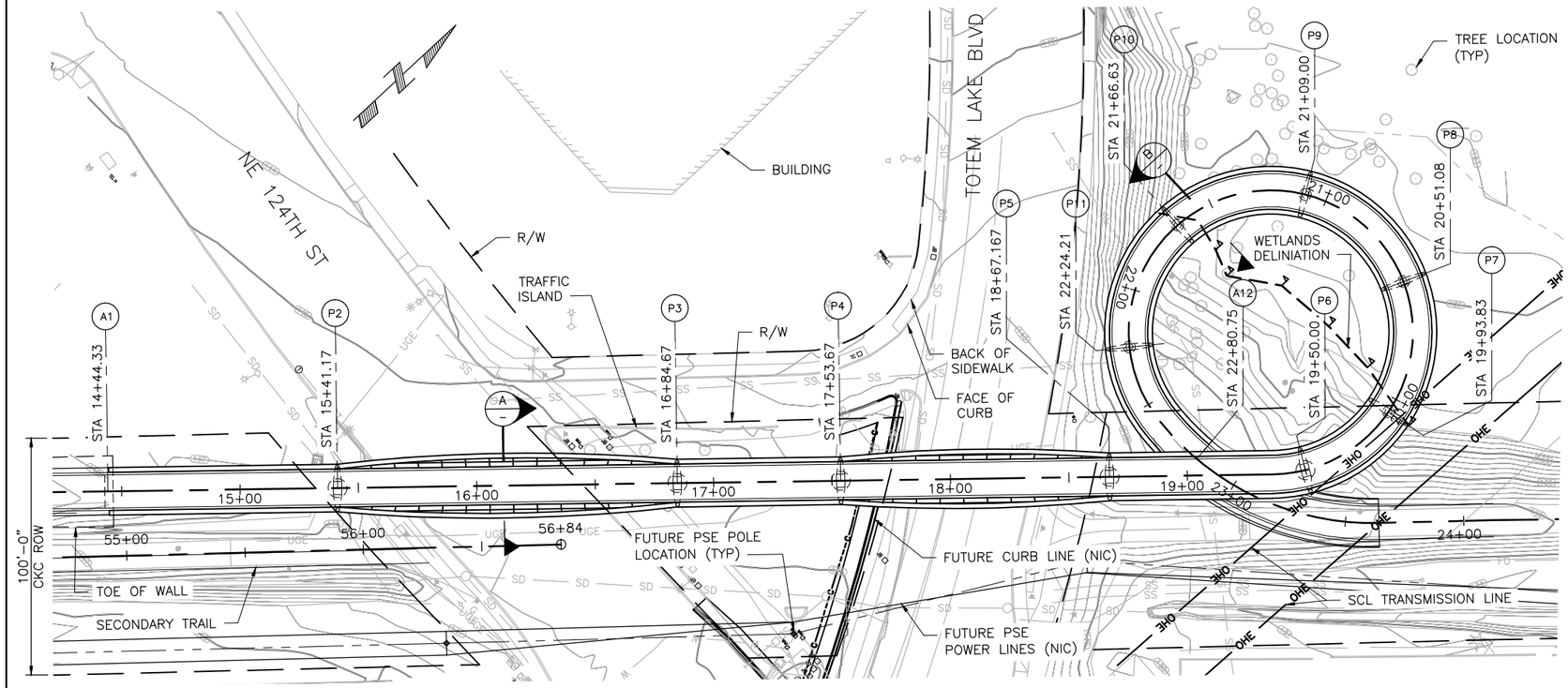

PLAN

SCALE: 1:30

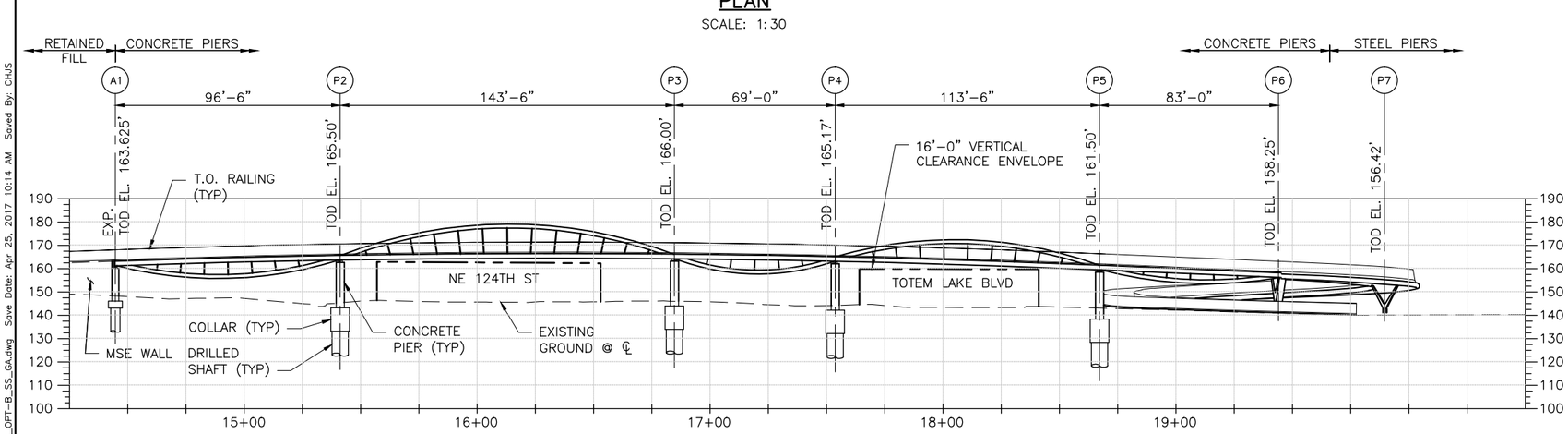

ELEVATION

SCALE: 1:30

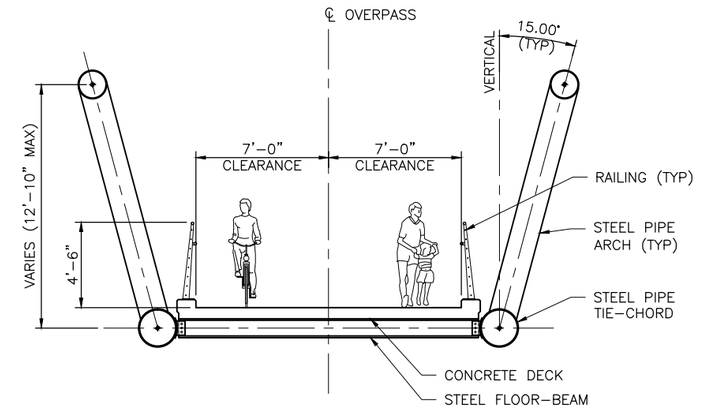

SECTION A

SCALE: 1/4" = 1'-0"

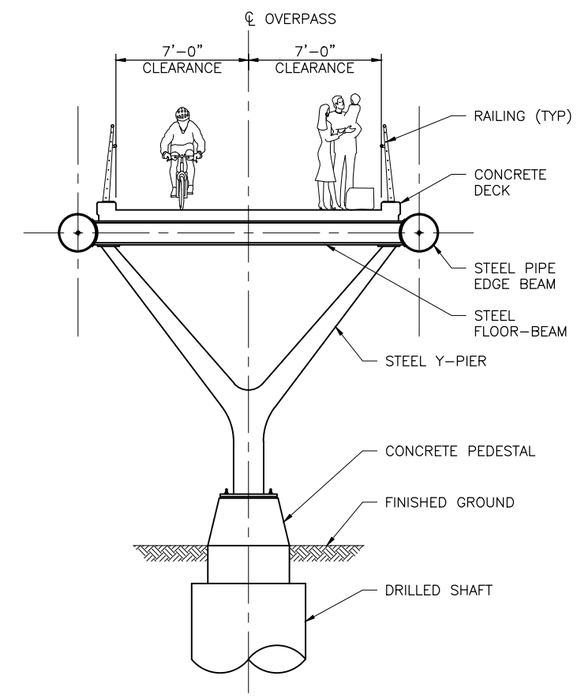

SECTION B

SCALE: 1/4" = 1'-0"

PRELIMINARY NOT FOR CONSTRUCTION

REV.	DESCRIPTION	BY	DATE
PA	TS&L	CHJS	2017-04-27

PRIME LOGO/ADDRESS: COWI

DRAWN BY: CHJS	DATE: 2017-04-27		
DESIGN BY: SCVA	DATE: 2017-04-27		
CHECKED BY: KADI	DATE: 2017-04-27		
APPROVED BY: SCVA	DATE: 2017-04-27		

SUB LOGO/ADDRESS:

CLIENT LOGO/ADDRESS: CITY OF KIRKLAND WASHINGTON

PROJECT: CITY OF KIRKLAND TOTEM LAKE CONNECTOR

SHEET TITLE: GENERAL ARRANGEMENT – OPTION B SKIPPING STONE

DRAWING: A088367-S-005

DATE: 2017-04-27

SCALE: AS SHOWN

SHEET: 05 OF 07

File: C:\pwwork\dklpw2\d0329120\A088367_S-005_OPT-B_SS_GA.dwg Save Date: Apr 25, 2017 10:14 AM Saved By: CHJS

NOTES:

1. ELEVATIONS AND DIMENSIONS IN THESE PLANS ARE CALCULATED FROM A RECENT FIELD SURVEY BY 1ALLIANCE.
2. (NIC) = NOT IN CONTRACT

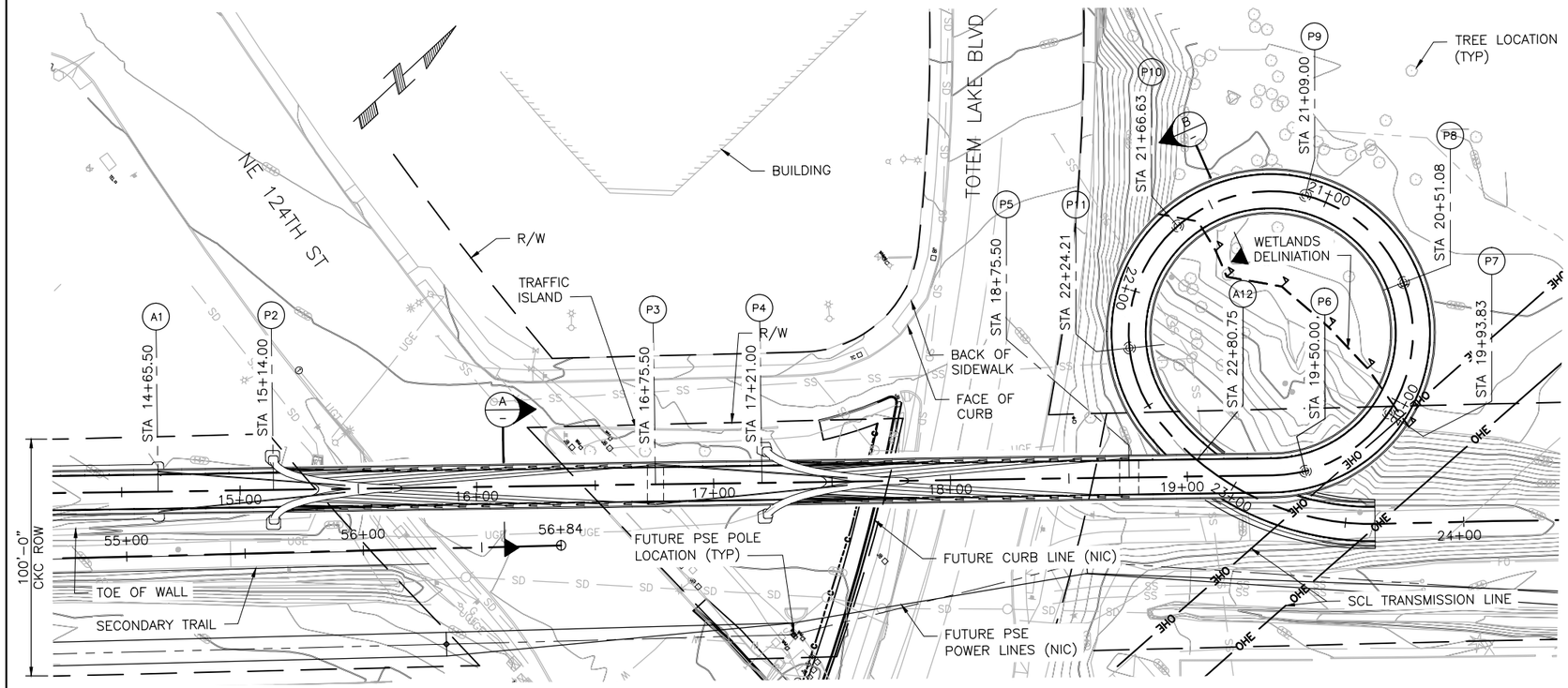

PLAN

SCALE: 1:30

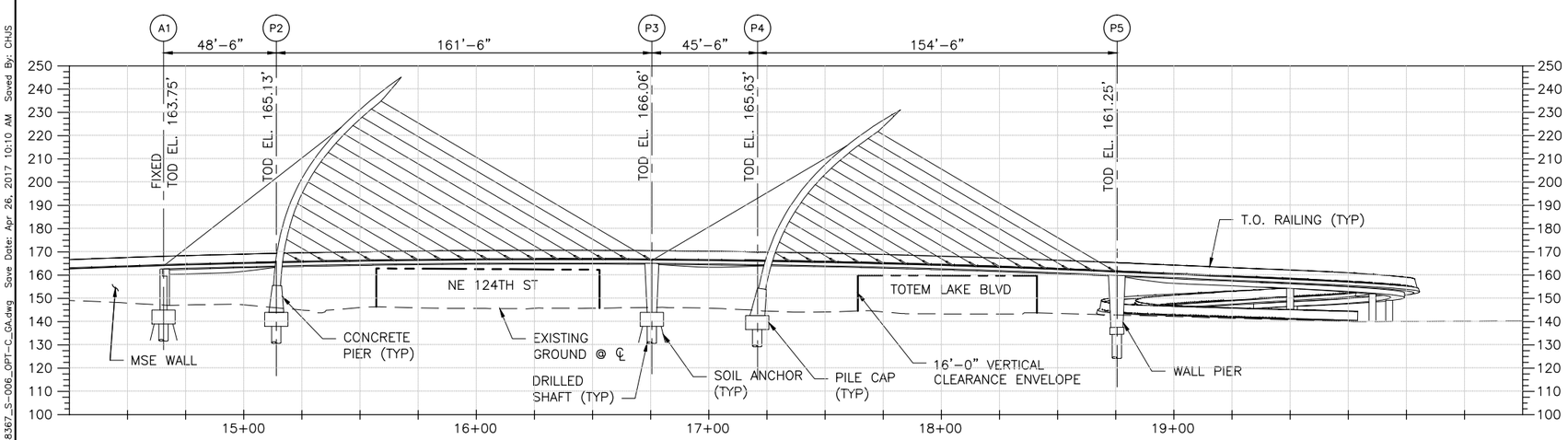

ELEVATION

SCALE: 1:30

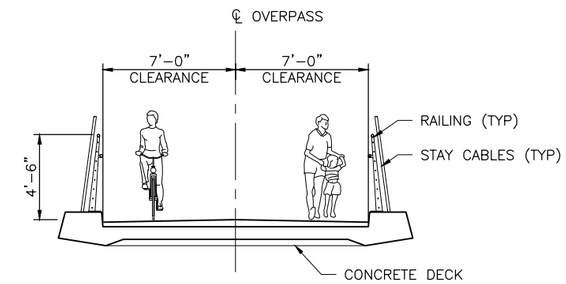

SECTION A

SCALE: 1/4" = 1'-0"

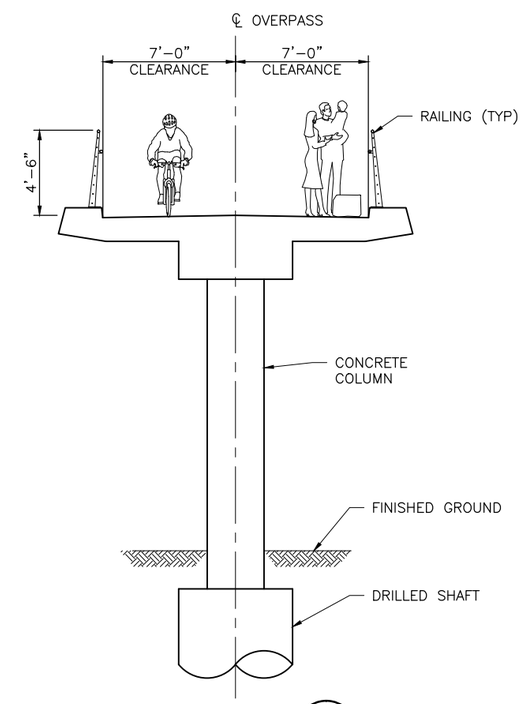

SECTION B

SCALE: 1/4" = 1'-0"

PRELIMINARY NOT FOR CONSTRUCTION

REV.	DESCRIPTION	BY	DATE
PA	TS&L	CHJS	2017-04-27

PRIME LOGO/ADDRESS: COWI

DRAWN BY: CHJS	DATE: 2017-04-27		
DESIGN BY: SCVA	DATE: 2017-04-27		
CHECKED BY: KADI	DATE: 2017-04-27		
APPROVED BY: SCVA	DATE: 2017-04-27		

SUB LOGO/ADDRESS:

CLIENT LOGO/ADDRESS: CITY OF KIRKLAND WASHINGTON

PROJECT: CITY OF KIRKLAND TOTEM LAKE CONNECTOR

SHEET TITLE: GENERAL ARRANGEMENT – OPTION C HALF ARCHES

DRAWING: A088367-S-006

DATE: 2017-04-27

SCALE: AS SHOWN

SHEET: 06 OF 07

File: C:\pwwork\dklypw2\d0329122\A088367_S-006_OPT-C_GA.dwg Save Date: Apr 26, 2017 10:10 AM Saved By: CHJS

NOTES:

1. ELEVATIONS AND DIMENSIONS IN THESE PLANS ARE CALCULATED FROM A RECENT FIELD SURVEY BY 1ALLIANCE.
2. (NIC) = NOT IN CONTRACT

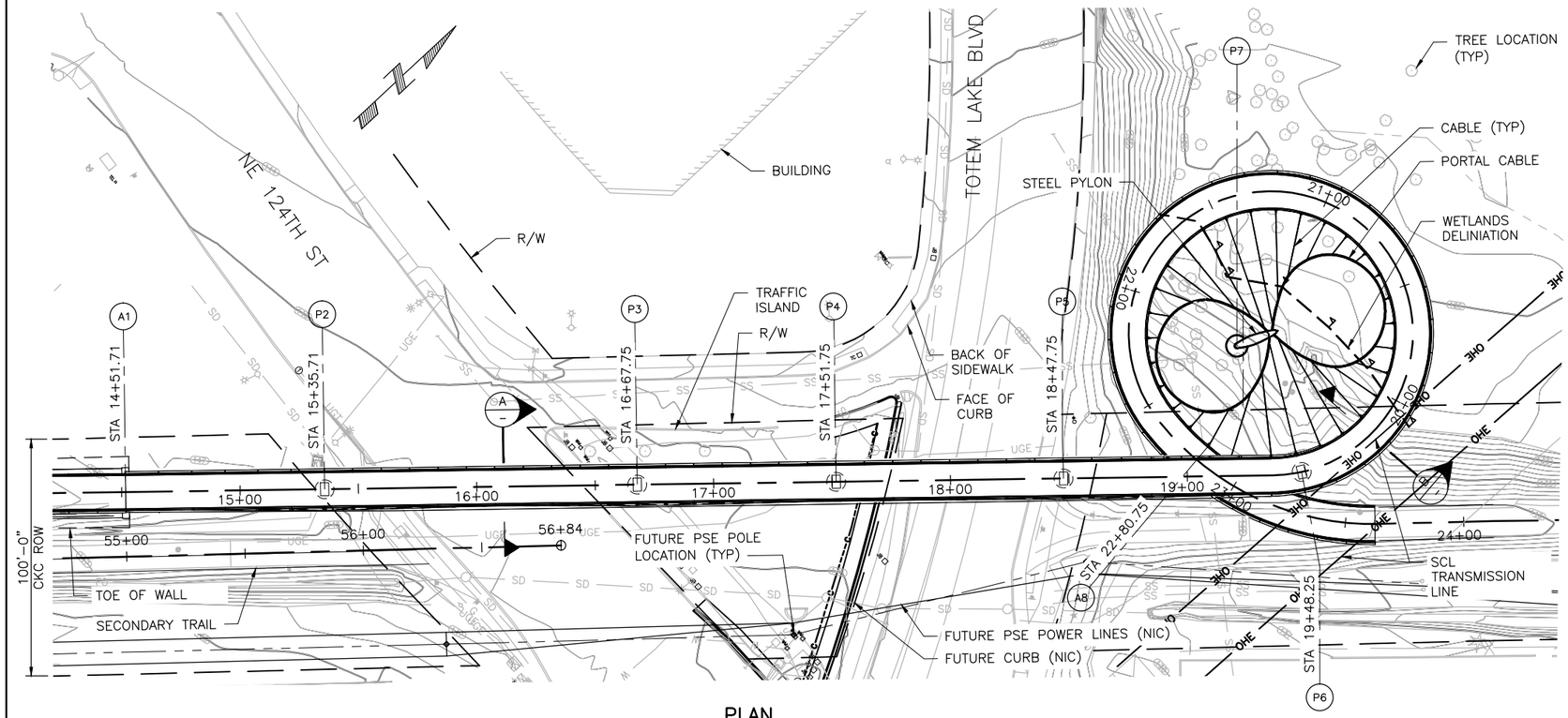

PLAN

SCALE: 1:30

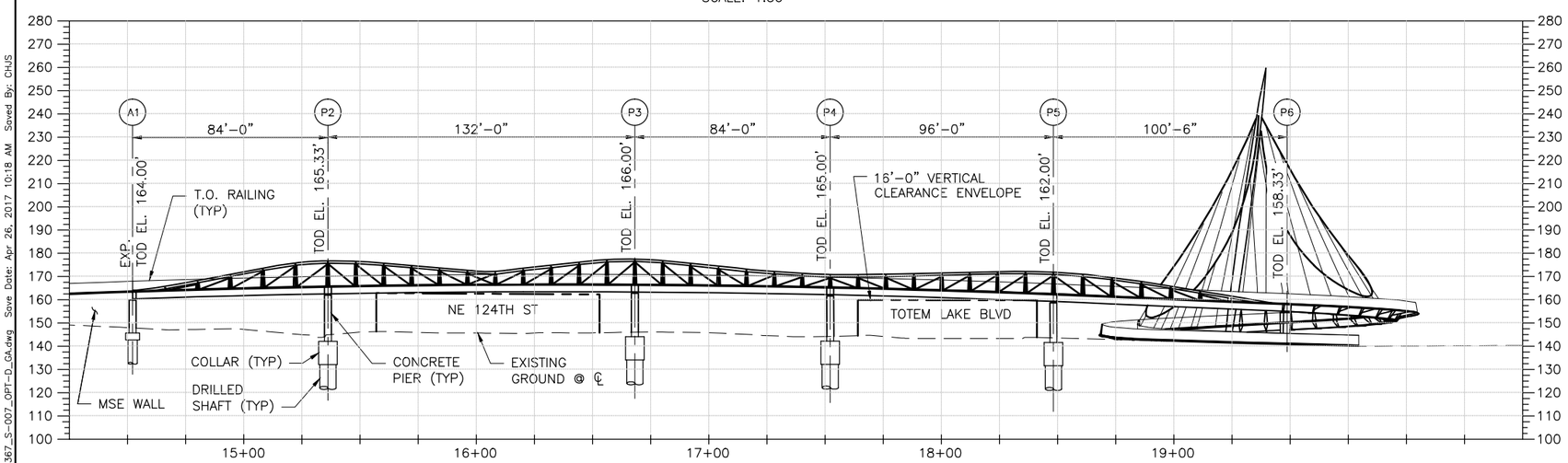

ELEVATION

SCALE: 1:30

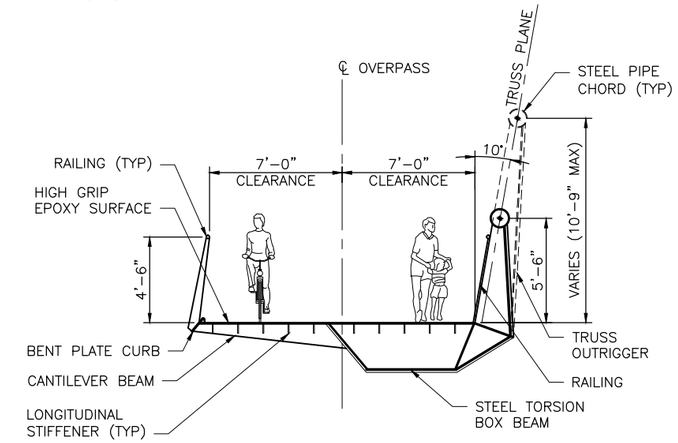

SECTION A

SCALE: 1/4" = 1'-0"

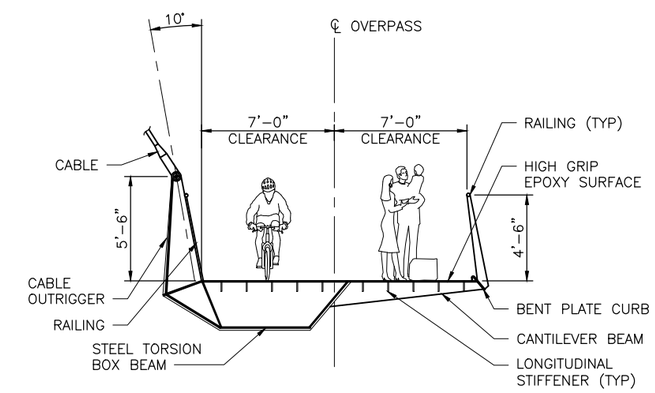

SECTION B

SCALE: 1/4" = 1'-0"

PRELIMINARY NOT FOR CONSTRUCTION

REV.	DESCRIPTION	BY	DATE
PA	TS&L	CHJS	2017-04-27

PRIME LOGO/ADDRESS: COWI

DRAWN BY: CHJS	DATE: 2017-04-27		
DESIGN BY: SCVA	DATE: 2017-04-27		
CHECKED BY: KADI	DATE: 2017-04-27		
APPROVED BY: SCVA	DATE: 2017-04-27		

SUB LOGO/ADDRESS:

CLIENT LOGO/ADDRESS: CITY OF KIRKLAND WASHINGTON

PROJECT: CITY OF KIRKLAND TOTEM LAKE CONNECTOR

SHEET TITLE: GENERAL ARRANGEMENT – OPTION D SUSPENDED RING

DRAWING: A088367–S–007

DATE: 2017-04-27

SCALE: AS SHOWN

SHEET: 07 OF 07

File: C:\pwwork\dklypw2\d0332148\A088367_S-007_OPT-D_GA.dwg Save Date: Apr 26, 2017 10:18 AM Saved By: CHJS