City of Kirkland

COMPREHENSIVE WATER SYSTEM PLAN

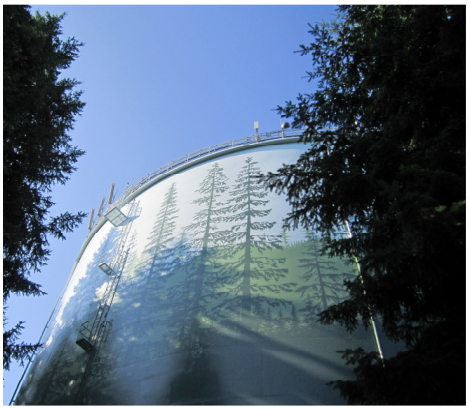

Prepared By

RH2 ENGINEERS PLANNERS SCIENTISTS

August 2014
Revised March 2015

City of Kirkland
Comprehensive Water System Plan
Table of Contents

APPENDICES

Appendix A – Water Service Area Agreement
Appendix B – Cascade Water Alliance Contract and Commitment Letter
Appendix C – CWA Contracts with Seattle and TPU
Appendix D – Interlocal Operation and Maintenance Agreement
Appendix E – Water System Facilities Data
Appendix F – Water System Facilities Inventory (WFI) Form
Appendix G – Hydraulic Model Node Diagram
Appendix H – Bellevue Intertie Agreements
Appendix I – Consistency Statement Checklist
Appendix J – SEPA Checklist
Appendix K – Water Use Efficiency Plan
Appendix L – Cross-Connection Control Program
Appendix M – Water System Construction Standards
Appendix N – Water Rights Self-Assessment
Appendix O – Coliform Monitoring Plans
Appendix P – Consumer Confidence Report
Appendix Q – Seismic Vulnerability Analysis and Earthquake Response Plan
Appendix R – O&M Forms and DOH Notices
Appendix S – Water Ordinances and City Code
Appendix T – Interlocal Agreement with Northshore Utility District
Appendix U – Executive Summary of CWA's TSP
Appendix V – Seattle Water Quality Reports
Appendix W – Sanitary Survey and Response
Appendix X – Stage 2 DBP Monitoring Plan
Appendix Y – Calibration Results
Appendix Z – Agency Review Comments

APPENDIX A

Water Service Area Agreement

AGREEMENT
FOR ESTABLISHING WATER UTILITY SERVICE AREA BOUNDARIES
AS IDENTIFIED BY THE EAST KING COUNTY
COORDINATED WATER SYSTEM PLAN

PREAMBLE

The Agreement for the water utility service area boundary identifies the external boundary of the service area for which the designated water purveyor has assumed direct retail water service responsibility. The responsibilities accepted by the water purveyor are outlined in the East King County Coordinated Water System Plan (CWSP), and as defined by the adopted rules and regulations of the Department of Health (DOH). This agreement does not give new authorities or responsibilities to the water purveyor or to the County or State regulatory agencies, but rather acknowledges the geographical area for these designated service responsibilities.

The terms used within this Agreement shall be as defined in the implementing regulations of Chapter 70.116 RCW, except as identified below.

1. East King County Critical Water Supply Service Area Map shall mean the map referenced in the Agreement as Attachment A for the retail service area, except as amended in accordance with the CWSP procedures and with the concurrence of the affected water purveyors.

2. Retail Service Area shall mean the designated geographical area in which a purveyor shall supply water either by direct connection, by a satellite system, or through interim service by an adjacent utility or Satellite System Management Agency under agreement with the designated utility.

3. Wholesale Service Area shall mean the designated geographical area in which a purveyor, a group of purveyors, or another organization provides water to other water purveyors on a wholesale basis. A wholesale water supplier shall not provide water to individual customers in another purveyor's retail service area except with the concurrence of the purveyor responsible for the geographical area in question.

4. Lead Agency for administering the Agreement for Establishing Water Utility Service Area Boundaries shall be King County, unless otherwise established by amendment to the CWSP.

The authority for this Agreement is granted by the Public Water System Coordination Act of 1977, Chapter 70.116 RCW.

WHEREAS, Such an Agreement is required in WAC 248-56-730, Service Area Agreements-Requirement of the Public Water System Coordination Act; and

WHEREAS, Designation of retail water service areas, together with the cooperation of utilities, will help assure that time, effort, and money are best used by avoiding unnecessary duplication of service; and

WHEREAS, Definite future service areas will facilitate efficient planning for, and provision of, water system improvements within East King County as growth occurs; and

WHEREAS, Definite retail and wholesale service areas will help assure that water reserved for public water supply purposes within East King County will be utilized in the future in an efficiently planned manner,

NOW, THEREFORE, the undersigned party, having entered into this Agreement by signature of its authorized representative, concurs with and will abide by the following provisions:

Section 1. Service Area Boundaries. The undersigned party acknowledges that the East King County Critical Water Supply Service Area Map, included as Attachment A to this Agreement and as may be subsequently updated, identifies the utility's future water service area. The undersigned further acknowledges that there are no service area conflicts with adjacent water utilities, or, where such conflicts exist, agrees that no new water service will be extended within disputed areas until such conflicts are resolved.

Section 2. Common Service Area Transfer. It is understood that utilities may initially continue existing water service within the boundaries of neighboring utilities, as defined in Section 1 hereof. Such common service areas, if they exist, are described in Attachment B to this agreement. Also included in Attachment B are copies of, or a list of, all resolutions, ordinances, or agreements enabling these uncontested overlays. The undersigned party agrees that any water line for retail service extending outside of the retail service area boundary, as set for in Section 1, shall be phased out and service transferred to the designated adjacent utility on an economic basis or by mutual agreement.

Economic basis considerations may include, but are now limited to:

(a) A determination by the present owner of service lines that maintenance, repair, and/or replacement costs exceed attributable income.

(b) Planned or imminent major street improvements or major

improvements to either or both water systems which include an opportunity to transfer service. The terms of the transfer of service ares described in this Section shall be established in a separate agreement among the adjacent utilities whose boundaries are affected.

Section 3. Boundary Streets. Unless separate agreements exist with adjacent utilities concerning water services or other utility services, this party agrees that the water utility which is located to the north and/or east of boundary streets between this party and adjacent utilities will be entitled to provide future water service on both sides of those streets. Depth of service on boundary streets shall be limited to one platted lot or as otherwise agreed by the utilities. Existing services on boundary streets shall remain as connected unless transfer of service is agreed to by both parties, as per Section 2. These provisions do not disallow the placement of mains in the same street by adjacent utilities where geographic or economic constraints require such placement for the hydraulic benefit of both utilities.

Section 4. Boundary Adjustments. If, at some time in the future it is appropriate for the undersigned party to make service area boundary adjustments, such modifications must receive written concurrence (which shall not be unreasonably withheld) of all utilities that would be directly affected by such a boundary adjustment and the proper legislative authority(ies). This provision does not apply where boundary adjustments are made as a result of municipal annexations or incorporations, nor is it intended to modify the provisions of state law. These written modifications must be noted and filed with the designated King County lead agency and DOH. It is understood by the undersigned party that if, as provided by RCW 70.116.040, it is unable to provide service within its designated service area boundary it may decline to do so. But, in that case, an applicant may be referred to other adjacent utilities, to a pre-qualified Satellite System Management Agency (SSMA), or a new utility may be created and the original service area boundary will be adjusted accordingly.

Section 5. Service Extension Policies. The undersigned party agrees that in order to expand its water service area, other than by addition of retail customers to existing water mains, or to serve in the capacity of a pre-qualified SSMA, it shall have adopted design standards and Utility Service extension policies. The design standards shall meet or exceed the East King County Minimum Design Standards.

Municipalities further agree that if they identify a service area outside of their existing municipal corporate boundaries, the municipality will assume full responsibility for providing water service equivalent to (excluding rates and charges) the level of service provided for their inside-city customers. This will be in conformance with applicable land use policies.

The agreement by reference includes the following attachments:

Attachment A - East King County Critical Water Supply Service Area Map. (see Section 1)

Attachment B - Common Service Area Agreement - Option - Utility may attach copies or list such agreements if relevent (see Section 2)

IN WITNESS WHEREOF, the undersigned party has executed this Agreement as of JUNE 3, 1997.

CITY OF KIRKLAND
Water Utility

Anne Fleming
Representative

City Manager, City of Kirkland
Title

Receipt Acknowledged:

King County

Date

Department

APPENDIX B

Cascade Water Alliance Contract and Commitment Letter

INTERLOCAL CONTRACT

Amended and Restated

October 26, 2011

TABLE OF CONTENTS

ARTICLE 1. AGREEMENT 1

ARTICLE 2. DEFINITIONS 1

ARTICLE 3. FORMATION OF ENTITY; PURPOSE AND POWERS 7

Section 3.1 Formation 7

Section 3.2 Membership 7

Section 3.3 Conversion to Municipal Corporation Status 9

Section 3.4 Purposes 9

Section 3.5 Powers 10

ARTICLE 4. ORGANIZATION STRUCTURE; BOARD 11

Section 4.1 Composition, ByLaws and Meetings 11

Section 4.2 Powers of the Board 12

Section 4.3 Voting 12

Section 4.4 Officers and Committees 12

Section 4.5 Executive Committee 13

Section 4.6 Staff, Consultants and Contractors 14

Section 4.7 Budget; Dues; Financial Management 14

ARTICLE 5. ASSET DEVELOPMENT AND SUPPLY COMMITMENT 15

Section 5.1 Property Acquisition, Ownership and Disposition 15

Section 5.2 Supply Commitment 16

Section 5.2.1 Commitment to Members 16

Section 5.2.2 Additional Rules for Members Retaining Independent Supply 18

Section 5.2.3 Additional Rules for Source Exchange 19

Section 5.3 Financing of Assets 20

Section 5.3.1 Issuance of Bonds 20

Section 5.3.2 Pledge of Revenues 21

Section 5.3.3 Continuing Disclosure 23

Section 5.3.4 Preservation of Tax Exemption for Interest on the Bonds 23

Section 5.3.5 Additional Certificates 23
Section 5.4 Supply Expansions and System Extensions 23
Section 5.5 Regional Capital Facilities Charges 24
Section 5.6 Transfer Upon Mergers, Consolidations and Assumptions 26
ARTICLE 6. NEW INDEPENDENT SUPPLY 27
ARTICLE 7. ASSET MANAGEMENT 27
Section 7.1 Supply System Management 28
Section 7.2 Conservation 28
Section 7.3 Shortages and Emergency 29
Section 7.3.1 Shortages 29
Section 7.3.2. Emergency 30
Section 7.4 Water Quality 30
Section 7.5 Water Supply Rates and Charges 31
Section 7.6 New Water Surcharge 33
Section 7.7 Franchises and Easements 33
Section 7.8 Sales of Water to Non-Members 33
Section 7.9 Payment Procedures; Default; Step-Up Provisions 34
Section 7.9.1 Invoice and Payment 34
Section 7.9.2 Default and Step-Up 35
ARTICLE 8. PLANNING 36
Section 8.1 Water Supply Plan 36
Section 8.2 Watershed Management Plan 37
Section 8.3 System Reliability Methodology 37
ARTICLE 9. FILINGS 37
ARTICLE 10. DURATION AND DISSOLUTION; WITHDRAWAL 37
Section 10.1 Duration 38
Section 10.2 Withdrawals 38
Section 10.3 Dissolution 40
Section 10.4 Successor Entity 40
ARTICLE 11. AMENDMENTS 41
ARTICLE 12. APPLICABLE LAW AND VENUE 41

ARTICLE 13. NO THIRD PARTY BENEFICIARIES **41**

ARTICLE 14. SEVERABILITY **41**

ARTICLE 15. ENTIRE AGREEMENT **42**

ARTICLE 16. EXECUTION **44**

CASCADE WATER ALLIANCE
INTERLOCAL CONTRACT

Recitals

WHEREAS, the Cascade Water Alliance, an intergovernmental organization created by Interlocal Contract effective April 1, 1999 (as amended July 2000 and November 2002) to further the interests of its Members with respect to water supply and to work cooperatively with other water supply entities in the region; and

WHEREAS, Members of the Cascade Water Alliance have determined to amend the Cascade Water Alliance's Interlocal Contract to better facilitate the purpose of the Cascade Water Alliance;

NOW, THEREFORE, it is agreed as follows:

ARTICLE 1. Agreement

The Cascade Interlocal Contract, effective April 1, 1999, and entered into under authority of the Interlocal Cooperation Act, Chapter 39.34 RCW is amended and re-stated as provided herein.

ARTICLE 2. Definitions

"Asset Transfer Agreement" means an agreement between Cascade and a Member by which the Member transfers title to Water Supply Assets to Cascade, with or without monetary consideration, to be operated and maintained as part of the Cascade Water System.

"Authorized Issuer" means either: (a) Cascade (or a successor entity); or (b) a Member or other entity authorized to issue Bonds for the benefit of Cascade approved by Resolution of the Board.

"Board" means the Board of Directors of Cascade.

"Bonds" means short-term or long-term bonds, notes, warrants, certificates of indebtedness, or other obligations issued by, or on behalf of Cascade.

"ByLaws" means the ByLaws of Cascade, as adopted and amended by the Board.

"Cascade" means Cascade Water Alliance.

"Cascade ERUs" ("CERUs") means equivalent residential units, calculated according to the Regional Capital Facilities Charge Methodology.

"Cascade Source Exchange Program" means a program adopted by Resolution of the Board for the replacement of all or a portion of a public water systems existing water supply to benefit stream flow and fish without serving growth or increasing that system's water supply. A program utilizing Lake Tapps Water Supply shall include the terms and conditions for source exchange contained in the Lake Tapps' Water Right Report of Examination.

"Cascade Source Exchange Program Agreement" means an agreement between Cascade and a Member or another public water supplier to implement the Cascade Source Exchange Program.

"Cascade Supply Date" means the date for the Founding Members and each new Member, established by Resolution of the Board, upon which Cascade undertakes a Supply Commitment.

"Contract" means this Cascade Water Alliance Interlocal Contract.

"Demand Share" means either a Member's current share of water provided through the Supply System, or estimated share of water to be provided through the Supply System,

whether Full Supply or Interruptible Supply, expressed in millions of gallons per day. Demand Share is calculated according to the Rate Calculation Methodology.

"Dual Majority Vote" means Board approval of a proposal on the basis of a simple majority of all Members, allowing one vote per Member, together with a simple majority of all Members on the basis of each Member's Weighted Vote. A "simple majority" means a majority of all Members of Cascade, not just the Members present and voting.

"65% Dual Majority Vote" means Board approval of a proposal on the basis of a 65% supermajority of all Members, allowing one vote per Member, together with 65% supermajority of all Members on the basis of each Member's Weighted Vote. A "supermajority" means 65% of all Members of Cascade, not just the Members present and voting.

"Founding Member" means the City of Bellevue, Covington Water District, the City of Issaquah, the City of Kirkland, the City of Redmond, Sammamish Plateau Water and Sewer District, Skyway Water and Sewer District, and the City of Tukwila.

"Gross Cascade Revenue" means all of the earnings and revenues received by Cascade from any source whatsoever including but not limited to: (a) Member Charges; (b) revenues from the sale, lease or furnishing of other commodities, services, properties or facilities; (c) the receipt of earnings from the investment of money in any maintenance fund or similar fund; (d) and withdrawals from any rate reserve or rate stabilization fund or account.

However, Gross Cascade Revenue shall not include: (a) principal proceeds of Bonds or any other borrowings, or earnings or proceeds from any investments in a trust, defeasance or escrow fund created to defease or refund obligations relating to the Water Supply System

(until commingled with other earnings and revenues included in Gross Cascade Revenue) or held in a special account for the purpose of paying a rebate to the United States Government under the Code; (b) taxes and other income and revenue which may not legally be pledged for revenue bond debt service; (c) improvement district assessments; (d) federal or state grants allocated to capital projects; (e) payments under Bond Insurance or other credit enhancement policy or device; (f) insurance or condemnation proceeds used for the replacement of capital projects or equipment; (g) earnings in any construction fund or bond redemption fund; (h) deposits to any rate reserve or rate stabilization fund or account; or (i) any revenues generated by any Independent Supply except those amounts that are payable to Cascade pursuant to this Contract or another interlocal agreement.

"Independent Supply" or **"Independent Supplies"** means a Member's Water Supply Assets that are not part of the Supply System.

"Member" or **"Members"** means one or more member agencies of Cascade.

"Member Charges" means all payments that Cascade Members are required by this Contract to make to Cascade, including but not limited to all Rates and Charges, RCFCs, dues, assessments and other payments from Members.

"Net Cascade Revenue" means Gross Cascade Revenue less Operations and Maintenance Costs.

"Non-Member" means any person or agency that is not a party to this Contract.

"Operations and Maintenance Costs" or **"O&M Costs"** means all expenses incurred by Cascade to operate and maintain the Supply System in good repair, working order and condition, including without limitation, payments made to any other public or private

entity for water or other utility service. Except as approved by the Board, Operations and Maintenance Costs shall not include any depreciation, capital additions or capital replacements to the Supply System.

"Rates and Charges" means the rates and charges (not including RCFCs) chargeable to each Member using the Rate Calculation Methodology plus any late payment or other charge that may be due.

"Rate Calculation Methodology" means the method of setting Rates and Charges adopted by the Board in accordance with Section 7.5

"Regional Capital Facilities Charges" ("RCFCs") means the charges to each Member for new CERUs connected to that Member's water distribution system.

"Regional Capital Facilities Charge Methodology" ("RCFC Methodology") means the method of determining the RCFCs adopted by the Board in accordance with Section 5.5.

"Satellite Systems" means water supply facilities identified as such by the Board, including but not limited to facilities that serve a portion of a Member's customers but that are not part of the Member's main water system.

"Seattle Contract Purveyor" or **"Seattle Contract Purveyors"** means a Member that is or was a party to The City of Seattle Water Purveyor Contracts, Version A or Version B, dated November 1981 (as amended) executed prior to July 1, 1998.

"Supply Commitment" means the obligation undertaken by Cascade, established by Resolution of the Board to supply water to a Member. With respect to Members, that

obligation shall be characterized as **"Full Supply Commitment,"** or an **"Interruptible Supply Commitment"** defined as follows:

"Full Supply Commitment" for any or all of a Member's water needs means that those needs, as projected in the Member's lawfully adopted water supply plan, shall be met from the Supply System, net of independent supply and subject to the other limitations established in this agreement, on an equal parity with all other Full Supply Commitments, and with a guaranteed priority no lower than for any other Supply Commitment made by Cascade; provided that no Member is guaranteed any given amount of supply or capacity.

"Interruptible Supply Commitment" means a supply of all or part of a Member's water needs from the Supply System on an as-available basis on a lower priority than any Full Supply Commitment.

The Supply Commitment for a Member shall be defined by this Interlocal Contract, the terms and conditions of membership, and the Supply Commitment resolution.

"Supply System" means the Water Supply Assets owned or controlled by Cascade.

"Water Supply Assets" means tangible and intangible assets usable in connection with the provision of water supply, including without limitation, real property, physical facilities (e.g., dams, wells, treatment plants, pump stations, reservoirs, and transmission lines), water rights, capacity and/or contractual rights in facilities or resources owned by other entities, and investments in conservation programs and facilities.

"Watershed Management Plan" means a plan adopted by Cascade for purposes of regional water supply, water transmission, water quality or protection, or any other water-related purpose, including but not limited to the plans identified in RCW 39.34.190(3).

"Water Supply Plan" means the Cascade Regional Water Supply Plan (which may include the Cascade Watershed Management Plan) adopted by the Board as provided in Section 8.1 and 8.2.

"Weighted Vote" means a vote in which each Member's vote is counted according to the Member's Demand Share, but no Member shall have a Weighted Vote of less than one.

ARTICLE 3. Formation of Entity; Purpose and Powers

Section 3.1 Formation. The Cascade Water Alliance was created on April 1, 1999 as a public body and an instrumentality of its Members, which exercises essential governmental functions on its Members' behalf as authorized by the Interlocal Cooperation Act (RCW 39.34). Cascade is incorporated under RCW 39.34.040(3) as a public nonprofit corporation in the manner set forth in RCW 24.03 or 24.06 and it may, with Board approval, be incorporated as a partnership in the manner set forth in RCW 25.04, or the Board may organize the form of Cascade in any other manner permitted by law. In addition to its status under any other applicable law, Cascade shall constitute a "watershed management partnership" as provided in Chapter 39.34 RCW. The Board may approve the filing of Articles of Incorporation or similar documents in connection with incorporating Cascade or organizing it in some other manner.

Section 3.2 Membership. Subject to restrictions on future Cascade water rights, or to limitations upon water's place of use imposed by contract or permit, any municipal water utility serving within the Central Puget Sound Region may be admitted to Cascade. The decision to admit new Members rests with the sole discretion of the Board, which shall

determine whether to extend a membership offer taking into consideration the audit findings, Cascade water resources, and any other factors the Board deems advisable.

When a municipality applies for membership, Cascade shall conduct a water supply audit according to the methodology and within the period determined by the Board. Audit results shall be provided to the Board and to the applicant.

If a membership offer is extended, it shall address the nature of the Water Supply Assets being transferred or retained and the "value" of those assets in terms of the calculation of an applicant's Demand Share, RCFCs and other matters relating to the rights and obligations of the applicant and Cascade, which must be recorded in the form that the Board determines and which will constitute, along with this Contract, the conditions under which an applicant becomes a Member of Cascade. An applicant for membership shall be admitted by adoption of a Resolution of the Board accepting the application for membership and incorporating the terms and conditions of membership.

Each membership application must be accompanied by a nonrefundable application fee based on the cost of the audit and other costs related to the admission of a new Member or a request for new supply. The Board shall set the application fee for each applicant based on the estimated cost of processing the application, including the cost of the audit.

As a condition of membership, each new Member admitted to Cascade shall, in addition to any other applicable fees, rates, charges or assessments, pay to Cascade the membership fee, as established by the Board.

If an applicant's planning process or plans are materially out of compliance with the requirements of the Growth Management Act, the Board may condition an offer of membership upon the applicant's compliance with that act.

Section 3.3 Conversion to Municipal Corporation Status. In accordance with Section 10.4, Cascade may be converted into a separate municipal corporation if, and as permitted by law. Upon the creation of such a separate municipal corporation, all Cascade rights and obligations and all Member rights an obligations under this Contract shall transfer to that new municipal corporation.

Section 3.4 Purposes. Cascade's purposes include only those related to water resources, and do not include the provision of other general services to the public, and are to:

a. provide a safe, reliable and high quality drinking water supply to meet the current and projected demands of Cascade Members serving the Central Puget Sound Region, and for non-Members as determined by Cascade, and to carry out this task in a coordinated, cost-effective, and environmentally sensitive manner;

b. develop, contract for, manage, acquire, own, maintain and operate Water Supply Assets, including without limitation, surface water supplies, groundwater supplies, reclaimed water supplies, and other water supply resources as determined by the Board;

c. contract with Seattle to transfer to Cascade and to modify Seattle's rights and duties with respect to Seattle Contract Purveyors;

d. contract for, or assume certain contractual rights and duties related to the Tacoma Second Supply Pipeline project;

e. purchase and provide water supply, transmission services, treatment facilities and other related services;

f. provide conservation programs to promote the wise and efficient use of resources;

g. carry out emergency water supply and shortage management programs for its Members when demands exceed available supply;

h. coordinate and plan cooperatively with other regional or local water utilities and other entities to maximize supply availability and to minimize system costs;

i. develop a Water Supply Plan addressing the needs of its Members and develop a Watershed Management Plan serving the needs of its Members and Cascade itself and develop a regional water supply plan with other water providers as Cascade may find convenient or necessary to meet regional, state and federal planning requirements, and to take a leadership role in developing and coordinating those supply plans;

j. share costs and risks among Members commensurate with benefits received; and

k. carry out, or to further other water supply purposes that the Members determine, consistent with the provisions of this Contract.

Section 3.5 Powers. To further its purposes, Cascade has the full power and authority to exercise all powers authorized or permitted under RCW 39.34 and any other laws that are now, or in the future may be, applicable or available to Cascade and to engage in all activities incidental or conducive to the attainment of the purposes set forth in Section 3.4 of this Contract, including but not limited to the authority to:

a. acquire, construct, receive, own, manage, lease and sell real property, personal property, intangible property and other Water Supply Assets;

b. operate and maintain facilities;

c. enter into contracts;

d. hire and fire personnel;

e. sue and be sued;

f. exercise the power or eminent domain (through its Members at their individual discretion, unless and until Cascade has that power under applicable law);

g. impose, alter, regulate, control and collect rates, charges, and assessments,

h. purchase and sell water and services within and outside the geographical boundaries of its Members;

i. borrow money (through its Members or other entities at their individual discretion or as authorized by Chapter 39.34 RCW now or in the future), or enter into other financing arrangements;

j. lend money or provide services or facilities to any Member, other governmental water utilities, or governmental service providers;

k. invest its funds;

l. establish policies, guidelines, or regulations to carry out its powers and responsibilities;

m. purchase insurance, including participation in pooled insurance and self-insurance programs, and indemnify its Members, officers and employees in accordance with law;

n. exercise all other powers within the authority of, and that may be exercised individually by all of its Members with respect to water supply, conservation, reuse, treatment and transmission, or any of the other purposes set forth in Section 3.4;

o. exercise all other powers within the authority of, and that may be exercised individually by all its Members with respect to watershed planning and management; and

p. exercise all other corporate powers that Cascade may exercise under the law relating to its formation and that are not inconsistent with this Interlocal Contract or with Chapter 39.34 RCW or other applicable law.

ARTICLE 4. Organization Structure; Board

Section 4.1 Composition, ByLaws and Meetings. Cascade is governed by a Board of Directors consisting of one individual representative appointed by Resolution of the Member's legislative authority. Members may similarly appoint Alternate Board Members. Each Board Member and each Alternate Board Member must be an elected official of the Member.

The Board shall adopt ByLaws consistent with this Interlocal Contract that specify, among other matters, the month of Cascade's Annual Meeting, Board powers and duties and those of the Executive Committee, Standing Committees, Officers and employees.

The Board shall meet as required by the ByLaws, but not less than quarterly.

Section 4.2 Powers of the Board. The Board has the power to take all actions on Cascade's behalf in accordance with voting provisions set forth in Section 4.3. The Board may delegate to the Executive Committee or to specific Cascade Officers or employees any action that does not require Board approval under this Contract.

Section 4.3 Voting. All Board actions must be approved by Dual Majority Vote of all Members, except where this Contract requires either a 65% Dual Majority Vote, as provided in Sections 5.2, 5.5, 7.1, 7.3, 8.3, 10.3, 10.4, and Article 11; or ratification by the Members' legislative authority, as provided in Section 10.4 and Article 11. The Board may act by voice votes, as set forth in the ByLaws. Any Member may require a recorded tabulation of votes either before or immediately after a voice vote is taken. Although voting is, in part, based on Weighted Vote, the Members expressly agree that there is only one class of voting membership, and voting occurs within that single class.

Any Member that has been declared to be in default of its obligations under this Interlocal Contract by the Board shall lose its right to vote until the Board has declared the default to be cured.

Section 4.4 Officers and Committees. Cascade Officers shall include a Chair, a Vice Chair, a Secretary and a Treasurer. The Chair serves as the chair of the Board (and may

be known as the "President", if the ByLaws so designate) and performs those duties set forth in the ByLaws.

The Vice Chair shall perform the duties of the Chair in the Chair's absence and shall perform other duties as set forth in the ByLaws. The Secretary shall be responsible for Cascade records and performs other duties as set forth in the ByLaws. The Treasurer shall be responsible for Cascade accounts and financial records and performs other duties as set forth in the ByLaws.

Consistent with the provisions of this Contract, the Board may, in the ByLaws, establish additional Officers and set forth their duties.

The Board may create and appoint Members to Standing Committees and special committees as it deems appropriate. Committee Members need not be elected officials or employees of Members, but Standing Committee Chairs must be Board Members or Alternate Board Members.

Section 4.5 Executive Committee. The Chair, Vice Chair, Secretary, Treasurer and chairpersons of Standing Committees together constitute Cascade's Executive Committee. The Chair (or acting Chair) shall vote on matters before the Executive Committee only if necessary to break a tie. The Executive Committee's duties and responsibilities are set forth in the ByLaws. The Executive Committee shall not have the power to:

a. approve any contract for a term longer than three years;

b. approve any contract involving expenditure by, or revenue to Cascade in excess of such amounts and under such circumstances as set forth in the ByLaws;

c. retain or dismiss the chief executive officer or determine the chief executive officer's compensation; or

d. take any actions expressly reserved to the Board by this Contract or the ByLaws.

The Executive Committee shall have the authority, if necessary, to avoid default on any Bond, to withdraw from any capital reserve fund or rate stabilization fund, an amount equal to the amount necessary to avoid a default and to authorize payment of that amount to avoid default.

Section 4.6 Staff, Consultants and Contractors. Cascade staff shall consist of a chief executive officer and other positions established by the Board. The Board shall appoint, designate the title of, and establish the compensation range of the chief executive officer. The Board shall hire or retain legal counsel and independent accountants and auditors for Cascade. The authority to hire other consultants may be delegated to the Executive Committee. The chief executive officer appoints persons to fill other staff positions, and those appointments may be subject to ratification by the Board or the Executive Committee if the ByLaws so provide. The Board may also provide that administrative, professional or technical services be performed by contract.

Section 4.7 Budget; Dues; Financial Management. The Board must approve an annual budget determining Cascade's revenues and expenditures no later than sixty (60) days before the beginning of the fiscal year in which that budget will be in effect. The budget will be developed and approved according to a schedule established by the ByLaws. The budget must identify the levels of Member Charges on which revenue projections are based. The Board may amend the budget.

Each Member must pay annual dues to defray part or all of Cascade's administrative costs based on the number of CERUs served by its water system, regardless of water usage or capacity, and regardless of whether those units are served by the Supply System or by Independent Supply. Total administrative dues collected from all Members may not exceed 9% of Cascade's annual revenue requirement. This limit may be amended in the budget by a 65% Dual Majority Vote of the Board. The Board may establish minimum annual dues per Member and may provide that less than all of a Member's CERUs be taken into account in establishing dues.

All Cascade books and records shall be open to inspection by the Washington State Auditor.

ARTICLE 5. Asset Development and Supply Commitment

Section 5.1 Property Acquisition, Ownership and Disposition. Cascade may construct, purchase, rent, lease, manage, contract for, or otherwise acquire and dispose of Water Supply Assets and other assets. Cascade may control and manage both the assets it owns and the assets that are owned by Members that have transferred control and management of those assets to Cascade. This Contract does not vest in Cascade any authority with respect to Members' other facilities or assets, such as Water Supply Assets retained by Members as Independent Supply.

Subject to Cascade's agreement, a Member may transfer to Cascade its title to, or operational control and management of Water Supply Assets. Water Supply Assets may also be fully retained by Members as Independent Supply, subject to the provisions of Article 6. At the discretion of the Board, Cascade may accept title to, or operational control and

management of Water Supply Assets offered by Members or accept supply assets that constitute all or part of a Member's Satellite System(s). The Board may accept supply assets subject to the terms and conditions arranged between Cascade and the Member, based on the result of the audit process and mutual needs.

Cascade may enter into Asset Transfer Agreements which shall provide for the terms and conditions of: (a) Cascade's operation of the transferred Water Supply Asset with respect to the Member transferring the asset; (b) Cascade's operation, maintenance and replacement of the Water Supply Asset as part of the Supply System; (c) return or disposition of the Water Supply Asset if Cascade terminates its existence or the Member withdraws; (d) continuation of service (if appropriate) to Members or former Members by the Member receiving the Water Supply Asset at reasonable rates and charges or payment to Cascade of the cost of replacing the Water Supply Asset; and (e) such other conditions as the Board and the Member agree upon.

Members shall not be deemed to hold legal ownership rights in any Water Supply Assets owned by Cascade whether those Water Supply Assets have been developed by, purchased by, or transferred to Cascade, and regardless of the accounting treatment of RCFC payments and other payments made to Cascade.

Section 5.2 Supply Commitment

Section 5.2.1 Commitment to Members. Beginning on the Cascade Supply Date, Cascade shall provide a Fully Supply Commitment to each Founding Member. Thereafter, Cascade shall provide a Full Supply Commitment to meet all current and future water supply needs of a Member that joins with Water Supply Assets sufficient to provide for

its needs during the following fifteen (15) years (whether or not those Water Supply Assets are transferred to Cascade or retained as Independent Supply) commencing on the Member's Cascade Supply Date. When a supply contract is negotiated with Seattle, any Member that is a Seattle Contract Purveyor shall relinquish its rights under its Seattle Water Purveyor Contract to Cascade and execute such documents as may be necessary to transfer those rights to Cascade. Cascade shall accept those rights and a corresponding obligation to provide a Fully Supply Commitment (net of Independent Supply). The approval of a contract with the City of Seattle providing for the initial acquisition of rights to substantial Water Supply Assets, and any material amendment to that contract, shall be effective upon a 65% Dual Majority Vote.

Any Full Supply Commitment shall be subject to water shortages, to Cascade's ability to implement the Water Supply Plan, and to the portion of the Member's needs that can be served by the audited capacity of its Independent Supply. If the needed supply is not available, the shortage shall be shared by all the Members in accordance with Cascade's shortage management plan, except as otherwise provided in Section 5.5. Cascade is not obligated to provide water supply to service area expansions in or outside the urban growth boundary, unless Cascade agrees to such expanded service area. However, Cascade shall be obligated to provide water supply to the entire service area of each Member (as that service area is defined in terms under which the Member was admitted), whether or not some of that service area is within the Member's current jurisdictional boundaries and/or within the current urban growth boundary. Cascade is not obligated to provide increased water supply to any

Member if it is determined that the Member's planning process or plans are materially out of compliance with the requirements of the Growth Management Act.

A Member that joins with Water Supply Assets insufficient to provide for its needs for fifteen (15) years receives the Fully Supply it desires only if, when, and to the extent it is available within reliability standards determined by Cascade's system reliability methodology. If sufficient Full Supply is not available within reliability standards determined by Cascade's system reliability methodology, the Member receives partial Full or Interruptible Supply, and Full Supply must be provided within fifteen (15) years. Cascade shall then undertake to include in Cascade's Water Supply Plan, and to acquire the facilities or other assets necessary in the Board's determination to provide for that deficit. If Cascade fails to develop sufficient assets to timely provide the increased Full Supply, the commitment becomes a Full Supply Commitment at the end of that fifteen-(15) year period, and any shortage shall be shared by all Members in accordance with Cascade's shortage management plan.

If multiple Members request new Full Supply, requests must be honored in the order received (i.e., in the order in which application is made accompanied by the application fee). With respect to new Members, requests for Full Supply "vest" no earlier than the date that membership is effective. In cases of conflict or ambiguity, the Board may determine the order of requests.

Section 5.2.2 Additional Rules for Members Retaining Independent Supply. Whenever Cascade has a Supply Commitment to a Member that retains Independent Supply, Cascade shall provide Full Supply for all of that Member's water supply needs minus

the amount of water that an audit determines may be provided by that Member's Independent Supply. Members are not required to share shortages resulting from the loss or all or part of Independent Supply, although Cascade may make Interruptible Supply available to a Member that loses Independent Supply at prices that are consistent with the price of Interruptible Supply being made available to others at that time. Cascade may at any time and at its cost and expense carry out audits of a Member's Independent Supply.

A Member requesting an additional Full Supply Commitment due to loss of Independent Supply shall make that request by Resolution of the requesting Member's legislative authority. When and as determined by the Board, the Member shall pay an amount equal to the RCFCs allocable to the number of CERUs that can be served by the replacement supply provided or to be provided by Cascade. Cascade shall then include the supply in its Water Supply Plan, and provide the supply when it becomes available, but in any event within fifteen (15) years. If, within fifteen (15) years the supply is not available, Cascade's commitment becomes a Full Supply Commitment and any shortage with respect to that supply must be shared by all the Members in accordance with the Shortage Management Plan, except as otherwise provided in Section 7.3.

Section 5.2.3 Additional Rules for Source Exchange. The Board may, at its sole discretion, authorize a Cascade Source Exchange Program Agreement with a Member or Non-Member. The terms and conditions of a Cascade Source Exchange Program Agreement shall be developed from a source exchange proposal submitted to the Board. The agreement shall identify: (a) the water right (instantaneous and annual) to be augmented or replaced; (b) the Water Supply Assets to be utilized; (c) mechanisms and arrangements for delivery of

regional water; (d) characteristics of supply obligation (for example, peak and average quantities, seasonal or annual delivery duration, interruptibility and shortage management); (e) reporting requirements; (f) changes in operation needed to benefit stream flow and fish; (g) rates and charges; and (h) such other conditions as the Board and the Member or public water supplier agree upon. The agreement may or may not provide for adjustments to a Member's RCFC payments or credits and whether or not the source exchange is a loss of a Member's Independent Supply that would be subject to the provisions of Section 5.2.2.

Section 5.3 Financing of Assets. The acquisition of new capital facilities and other Water Supply Assets may be financed using RCFCs, transfers or Water Supply Assets, Rates and Charges, the issuance of revenue Bonds and such other sources as the Board may deem appropriate.

Section 5.3.1 Issuance of Bonds. An Authorized Issuer may issue Bonds payable from and secured solely by all or a portion of Net Cascade Revenue, evidencing indebtedness up to an amount approved by Resolution for the Board in order to provide financing or refinancing to acquire, construct, receive, own, manage, lease or sell real property, personal property, intangible property and other Water Supply Assets, to establish debt service reserves, to provide for capitalized interest and to pay the costs of issuance of, and other costs related to the issuance of the Bonds. Such Bonds shall be payable solely from all or a portion of the Net Cascade Revenue or (if the Authorized Issuer is other than Cascade) from payments to be made by Cascade out of all or a portion of Net Cascade Revenue, and such Bonds shall not pledge the full faith and credit or taxing power or, except as expressly provided by contract, the revenue, assets or funds of any Member.

Members serving as Authorized Issuers may conduct the financing through "separate systems" permitted by their applicable bond resolutions, or in some other appropriate manner, and Cascade may compensate those Members for all costs associated with the financing. Bond-related documents of Authorized Issuers other than Cascade must expressly permit the Bonds to be refunded or prepaid without penalty prior to their stated maturity, on and after such dates as are approved by the Authorized Issuer and the Board, to allow for a transfer of the obligation to Cascade or to Cascade's successor entity, including without limitation a joint operating agency or similar entity, as may be permitted by law.

Section 5.3.2 Pledge of Revenues. For as long as any Bonds payable from Net Cascade Revenue (or any portion thereof) are outstanding, Cascade irrevocably pledges to establish, maintain and collect all Member Charges in amounts sufficient to pay when due the principal of and interest on the Bonds (and, if the Authorized Issuer is other than Cascade, in addition to the foregoing pledge, to pledge to make timely payments to that Authorized Issuer for the payment of principal of and interest on the Bonds), together with amounts sufficient to satisfy all debt service reserve requirements, debt service coverage requirements, and other covenants with respect to the Bonds.

Each Member hereby irrevocably covenants that it shall establish, maintain and collect rates, fees or other charges for water and other services, facilities and commodities related to the water supply it receives from Cascade and/or its water utility at levels adequate to provide revenues sufficient to enable the Member to: (a) make the payment required to be made under this Contract; and (b) pay or provide for payment of all other charges and obligations payable from or constituting a charge or lien upon such revenues. Each Member hereby

acknowledges that this covenant and its covenant in Section 7.9 of this Contract may be relied upon by Bond owners, consistent with this Contract.

Each Member shall pay the Member Charges imposed on it whether or not the Water Supply Assets to be financed through the issuance of Bonds are completed, operable or operating, and notwithstanding the suspension, interruption, interference, reduction or curtailment in the operation of any Water Supply Assets for any reason whatsoever, in whole or in part. Member Charges shall not be subject to any reduction, whether by offset or otherwise, and shall not be conditioned upon the performance or nonperformance of any Member, or of any entity under this or any other agreement or instrument. However, credits against future RCFCs and Rates and Charges described in Sections 5.5 and 7.5, respectively, for development or addition of excess capacity that is either transferred to Cascade or retained as Independent Supply, shall not be considered "offsets" or "reductions" for the purposes of this Section.

If, in connection with the issuance of obligations, any Member establishes a new lien position on revenues relating to its water utility, that Member shall covenant in the relevant documents that the amounts to be paid to Cascade as Member Charges shall be treated either: (a) as part of that Member's internal operation and maintenance costs payable prior to debt service on those obligations; and/or (b) for any portion of those Member Charges that is allocable to capital costs, as a contract resource obligation payable prior to debt service on those obligations. If any Member has existing outstanding revenue obligations relating to its water utility, it shall include substantially similar "springing covenants" in the documents relating to any new parity obligations.

Section 5.3.3 Continuing Disclosure. To meet the requirements of United States Securities and Exchange Commission ("SEC") Rule 15c2-12(b)(5) (the "Rule") as applicable to a participating underwriter for any Bonds and any obligation of each Member as an "Obligated Person" under the Rule, Cascade and each Member agree to make an appropriate written undertaking, respectively, for the benefit of holders of the Bonds consistent with the requirements of the Rule.

Section 5.3.4 Preservation of Tax Exemption for Interest on the Bonds. Each Member covenants that it will take all actions necessary to prevent interest on tax-exempt Bonds from being included in gross income for federal income tax purposes, and it will neither take any action nor make or permit any use of proceeds of tax-exempt Bonds or other funds treated as proceeds of those Bonds at any time during the term of those Bonds that will cause interest on those Bonds to be included in gross income for federal income tax purposes.

Section 5.3.5 Additional Certificates. Each Member further agrees to provide such certificates or verifications as are reasonably requested by an Authorized Issuer in connection with the issuance of Bonds under this Section.

Section 5.4 Supply Expansions and System Extensions. Cascade must provide for Supply System expansions and extensions to meet the needs of additional water customers of Members, subject to consistency with applicable growth management plans and comprehensive plans, Cascade's water supply plan, orderly asset development, reasonable cost and financing capacity. The Board shall establish a water supply development process, including criteria governing the evaluation of new projects, and that process must promote

equality of costs and services (other than direct local services), regardless of geographic location. The results of the water supply planning process must be reflected in Cascade's Water Supply Plan. The Board shall have the authority to undertake new projects identified in Cascade's Water Supply Plan for the expansion of Water Supply Assets and regional transmission system extensions to meet Members' projected needs. To reduce costs, Cascade may, to the extent that the Board deems advisable, enter into agreements with Members to wheel water through their existing systems. When facilities are constructed that are used partially by Cascade for wheeling water and partially by Members or other entities for their purposes, the Board may determine an appropriate Cascade contribution to the cost of those facilities. Existing arrangements among Members (and between Members and Non-Members), in place when a Member joins Cascade, remain unaffected except as otherwise agreed between Cascade and the other entities concerned.

Section 5.5 Regional Capital Facilities Charges. To allocate growth costs to those Members that require capacity increases, each Member shall pay to Cascade an RCFC for each new CERU connected to its water distribution system. Growth in water usage by existing CERUs is not subject to RCFCs unless that growth constitutes a CERU increase as provided in the RCFC Methodology. Members with a supply deficit must pay an RCFC commensurate with that deficit. To the extent that a Member transfers to Cascade or retains as Independent Supply water supply in excess of its needs, it receives a corresponding credit against future RCRCs.

Subject to the provisions of Section 5.2.2, a Founding Member pays no RCFCs with respect to the number of CERUs served as of January 31, 2003, or other such later date as determined by Resolution of the Board.

A new Member with adequate supply shall commence paying RCFCs fifteen (15) years prior to the date that its Water Supply Assets are projected to be insufficient to provide for its needs as determined by the Board (taking into consideration the results of the Water Supply Audit).

A Member that joins with Water Supply Assets that are projected to be insufficient to provide for its needs for fifteen (15) years shall immediately pay RCFCs for the number of CERUs representing the deficit as determined by the Board.

RCFCs shall be calculated according to the RCFC Methodology, which shall define the analytical steps required to calculate the RCFCs according to the greater of: (a) the incremental difference between the average unit cost of expanding the system (i.e., the marginal cost of new capacity) and the average unit cost of the existing system; or (b) the average unit cost of past construction of the existing system plus then-planned Supply System improvements. The methodology shall provide for an annual escalator, recalculation and update not less frequently than every fifth year, and a methodology for determining CERUs. The RCFCs shall be imposed on the Member for each new CERU of that Member in accordance with the terms of this Contract. Amendments to the RCFC Methodology shall require a 65% Dual Majority Vote.

If a Founding Member owns Water Supply Assets or transfers Water Supply Assets to Cascade under Section 5.1, to the extent the audited capacity of those assets (including Seattle

Contract Purveyor rights) exceeds the Member's needs, that Member shall receive a credit against future RCFCs. If a Member seeks to transfer assets substantially in excess of its foreseeable needs, Cascade may negotiate appropriate compensation arrangements for the transfer.

Members that develop new Independent Supply that is approved by the Board in accordance with Article 6, similarly receive a credit effective when the Independent Supply is placed in service as determined by the Board.

A Member that accepts ownership of a Satellite System that Cascade agrees to serve shall pay an RCFC for the amount of supply needed to serve that system in excess of its rated capacity.

Members that experience a net reduction in the number of CERUs served shall receive a CERU-for-CERU credit against future RCFCs.

RCFC credits may not be transferred among Members without Board approval.

Members shall not be required to pass RCFCs to their customers as capital facilities charges, but may provide for the payment of RCFCs in whatever manner they deem appropriate.

For Members joining with an unmet net supply need, Cascade may, under circumstances determined by the Board, require the prepayment of RCFCs allocable to the full amount of the requested supply, i.e., when funds are needed to begin the construction of facilities immediately.

Section 5.6 Transfer Upon Mergers, Consolidations and Assumptions. If: (a) two or more Members merge or consolidate; (b) a Member or a Non-Member assumes

jurisdiction of part or all of a Member; or (c) a Member assumes jurisdiction of part or all of a Non-Member, the jurisdictions' water supply rights from and obligations to Cascade must be transferred or assumed under applicable law and consistent with the requirements of this Contract and the obligations of Cascade.

ARTICLE 6. New Independent Supply

Members may not bring new Water Supply Assets on-line as Independent Supply without Board approval. That approval may be granted or denied following an evaluation process, based on whether the Board determines that development of the proposed Independent Supply will benefit or be adverse to the interests of the Members as a whole. Recognizing that in certain circumstances the acquisition of additional Independent Supply might benefit (or cause no material harm to) the Members, new supplies under one (1) MGD may be approved by the Board regardless of the provisions of the Water Supply Plan and without a formal evaluation process. New supplies in amounts greater than one (1) MGD must be described in and be consistent with the Water Supply Plan.

Members that have invested in the development of new Independent Supply assets may offer to sell their interest in such assets to Cascade. Cascade may, in its sole discretion and subject to mutually agreeable terms and conditions, purchase the Member's interest in such Independent Supply asset by reimbursing or otherwise compensating the Member for its investment in the project to the extent that investment has been capitalized. Once Cascade has purchased a Member's interest in a project, the project will be considered a Water Supply Asset of Cascade and be incorporated into the Water Supply Plan.

ARTICLE 7. Asset Management

Section 7.1 Supply System Management. Cascade is responsible for managing, on behalf of all Members, the Supply System. Cascade is not responsible for managing Independent Supply unless it has expressly agreed to do so. Supply System management responsibilities shall be governed by Cascade's system management plan adopted by the Board. Cascade's system management plan concerns, without limitation, matters such as daily system operations and maintenance, interface with other supply providers, contractual obligations, water quality, billing, management and administration. Cascade may delegate and/or contract out its Supply System responsibilities.

Cascade must manage the Supply System in compliance with applicable laws, regulations and Cascade's minimum service standards. Adoption and amendments to the minimum service standards shall require a 65% Dual Majority Vote.

Section 7.2 Conservation. Cascade shall develop and carry out, and Members must participate in, water conservation programs that are uniform among Members. The Board shall develop and implement a Cascade conservation management plan that provides a mandatory base conservation program that functions to reduce both average and peak demands and may establish a charge or assessment to fund development and implementation of the program. Members may implement additional conservation programs. The Board may adopt wholesale charges in addition to normal Demand Share charges to encourage resource conservation. The Board may also provide or contribute to additional local conservation programs that are not offered to all Members, and these local programs may be locally funded or funded by Cascade. Members that fail to comply with base programs as set forth in

Cascade's conservation management plan may be required to assume a disproportionate reduction in water supply or to pay penalty charges, or both.

Section 7.3 Shortages and Emergency.

Section 7.3.1 Shortages. Members must respond to water shortages in a collective, shared fashion under a Cascade shortage management plan adopted by the Board. Resources must be shared in a manner that reduces the risk of severe shortages to each Member. Cascade's shortage management plan may include without limitation, a definition and classification of shortages, a shortage contingency plan including mandatory programmatic actions among all Members in the event of shortages, allocation of authority for determining and responding to shortages, and a communications and outreach program for the public. Members shall not be required to implement Cascade's shortage management plan in areas not served by the Supply System.

In the event of shortages, Cascade shall reduce or halt Interruptible Supply before invoking the Shortage Management Plan with respect to all Members with a Full Supply Commitment. However, the Board may, by 65% Dual Majority Vote, continue service in the amounts it deems appropriate to one or more Members receiving Interruptible Supply.

The Board may require that Members failing to comply with mandatory shortage management programs implemented under Cascade's shortage management plan assume a disproportionate reduction in supply or pay penalty charges, or both.

In the event of a Cascade-wide water shortage, Members with Independent Supply may, without penalty, decline to participate in the shortage management program for that shortage by foregoing all supply from Cascade for the duration of the emergency or shortage.

To avoid shortages resulting from emergencies or the inability to develop sufficient supplies, the Board may, by 65% Dual Majority Vote, establish moratoria on connections or additional commitments for future water services by the Members. A moratorium may be discontinued by a Dual Majority Vote of the Board.

Section 7.3.2. Emergency. The Board shall include in Cascade's shortage management plan policies and procedures for addressing short-term disruptions of water supply, transmission or water quality, and it may delegate to the General Manager authority to address such disruptions according to such policies and procedures.

Section 7.4 Water Quality. Cascade shall be responsible for water quality that meets or exceeds all federal or state requirements at the point of delivery from Cascade to the Member, consistent with applicable laws and regulations. Cascade assumes source water quality responsibility and liability with respect to Water Supply Assets under its ownership or control (including water wheeled to a Member through another Member's facilities). Cascade is also responsible for preparing and carrying out water quality activities compatible with the water quality requirements of regional water suppliers integrated with Cascade's system (e.g., Tacoma, Everett and Seattle).

Cascade may, in its sole discretion, determine and adjust the appropriate method and level of treatment of water that it supplies, so long as that water meets applicable state and federal requirements. If water that it supplies meets those requirements, Cascade shall not be obligated to adjust the method or level of treatment so that the water can be more readily blended with a Member's Independent Supply or more readily transmitted through a Member's internal system. Each Member shall remain responsible for water quality within its

respective distribution system, assuming that adequate water supply quality is provided by Cascade at the point of delivery from Cascade.

Each Member shall be responsible for all costs related to making water supplied by Cascade compatible with that Member's internal system, including but not limited to, costs of additional treatment.

Section 7.5 Water Supply Rates and Charges. The Board shall set Rates and Charges according to a Rate Calculation Methodology adopted from time to time by the Board. The Rate Calculation Methodology for Members' Supply Commitment shall provide for the definition and calculation of Demand Shares and for a uniform pricing structure with a commodity charge and fixed charges allocated by Demand Share.

Cascade may sell water to a Non-Member under terms and conditions established by the Board. The terms and conditions shall not be more favorable than the terms and conditions under which water is sold to Members. Revenue received from the sale of water to Non-Members shall be used to offset or reduce Rates and Charges to Members to the extent practicable, except that such revenue need not be treated as reducing or offsetting those amounts that are necessary for the payment of debt service on Bonds and for the provision of reserve and coverage requirements for the Bonds.

A Member shall be assigned a Demand Share based on the Board's best estimate of capacity to be used by that Member. Initially, the Board may base its estimate on a Seattle Contract Purveyor's use of water from Seattle. For a Member that joins without a supply history as a Seattle Contract Purveyor, or for a Member that has received only part of its water from Seattle, the Demand Share shall be established based on an audit of that Member's past

three (3) years of water use. After three (3) years as a Member, the baseline demand and capacity obligation for that Member shall be fixed based on actual experience as a Member. Specific Demand Shares may be set by the Board to account for circumstances, such as (by way of example and not by limitation) costs of extending the Supply System to a Member, or when Independent Supplies affect regional demand patterns. When water supply from Cascade is wheeled through a Member to another Member, Cascade may presume that the first Member receiving the water is the "User" for calculation of Demand Shares unless the Members concerned instruct Cascade to use a different allocation. Rate credits for Water Supply Asset transfers are not deducted in the calculation of Demand Shares but are applied to reduce what a Member would otherwise pay.

The Board must set Member Charges at levels it determines to be sufficient, together with other available revenue sources, to provide adequately for Operation and Maintenance Costs, Bond debt service, coverage and other covenants, replacement and renewal of facilities, reserves and other costs that the Board deems appropriate. The Board may provide that a Member's failure to participate in the planning process may result in penalty charges.

A Member that has transferred Water Supply Assets shall receive a credit, determined when those assets are audited and transferred, based on the useful life of those facilities and on the Member's use of the water produced by those assets or an amount of water equivalent to the amount of supply from them.

The Board may implement wholesale charges (additional to Demand Share-based charges and variable commodity charges) to reduce extreme peak use (e.g., "peaking-off of the pipe").

Water Rates and Charges must be the same for all Members receiving the same class of service (subject to credits, surcharges and penalty charges).

Section 7.6 New Water Surcharge.

A new water surcharge of $0.75 per 100 cubic feet (ccf) shall be imposed, effective on the Cascade Supply Date, and continue through December 31, 2011. It shall be applicable to all water purchased by Members over and above each Member's Old Water Allowance in the Seattle Purveyor Contract, if applicable, or to all water purchased by non-Seattle Purveyor Members. New water surcharge revenues shall be used to offset or reduce Rates and Charges to Members to the extent practicable, except that such revenue need not be treated as reducing or offsetting those amounts that are necessary for payment of debt service on Bonds and for the provision of reserve and coverage requirements for the Bonds.

Section 7.7 Franchises and Easements. Except to the extent otherwise required by state law, each Member shall provide franchises and rights of way on, under or across that Member's streets or other property, to Cascade and to other Members for Water Supply Assets, without charging any fees, rent or charges other than the customary and usual right-of-way permit and inspection fees.

Section 7.8 Sales of Water to Non-Members. Unless approved by the Board, a Member shall not sell water, including source exchange water, supplied by Cascade, nor shall a Member sell Independent Supply offset by water supplied by Cascade to a Non-Member. Notwithstanding the foregoing, any Member may sell water supplied by Cascade to a Non-Member to the extent required by a contract in effect as of the date the Member joins Cascade.

Section 7.9 Payment Procedures; Default; Step-Up Provisions.

Section 7.9.1 Invoice and Payment.

(a) Cascade shall provide each Member with periodic invoices showing the Member Charges payable by that Member for the billing period and the due date. Invoices shall be provided monthly or on other such periodic schedule as determined by the Board, but no more frequently than monthly nor less frequently than once every six months. The Board will determine a due date for all invoices.

(b) Payment of any and all invoices shall be due and payable on or before the due date, and shall be made by wire transfer or such other means as are agreed to by Cascade and the Member. If a treasurer, trustee, fiscal agent or escrow agent is appointed in connection with the issuance of Bonds, Cascade may require, and specify on the invoice, that certain amounts be provided directly to that person or entity, and the Member shall pay those amounts in the manner and to the person so specified.

(c) If full payment of any invoice is not received on or before the due date, such payment shall be considered past due and a late payment charge shall accrue for each day that the invoice remains unpaid. The late payment charge shall equal the product of the unpaid amount and an interest rate established by the Board. Late payment charges shall continue to accumulate until the unpaid amount of the invoice and all late payment charges are paid in full. Further, if an invoice or any portion thereof remains unpaid for more than sixty (60) days after the due date, Cascade may pursue any legally available remedy at law or equity for the unpaid amount, including without limitation, specific performance and collection of the late payment charge. Cascade's right to enforce payments in this regard may be assigned to a

treasurer, trustee, credit enhancement provider or other entity. Furthermore, upon written notice, Cascade may reduce or suspend delivery of water until the invoice and late payment charges are paid.

(d) If any Member disputes all or any portion of an invoice, it shall notify Cascade immediately upon receipt. If Cascade does not concur, the Member shall remit payment of the invoice in full, accompanied by written notice to Cascade indicating the portions of the invoice that the Member disputes and the reasons for the dispute. The Member and Cascade shall make a good faith effort to resolve such dispute. If the Member fails to remit payment of the invoice in full pending resolution of the dispute, the prevailing party in an action relating to the collection of that invoice shall be entitled to reasonable attorney fees and costs.

Section 7.9.2 Default and Step-Up.

(a) If any Member fails to make any payment in full for more than fifty (50) days past the due date, Cascade shall make written demand upon that Member to make payment in full within ten (10) days of the date that the written demand is sent by Cascade. If the failure to pay is not cured within the ten (10) day period, the Member shall be deemed to be in default.

(b) Upon an event of default as described in subsection 7.9.2(a), the other Members shall pay Cascade (in addition to Member Charges otherwise due) the defaulting Member's Member Charges in proportion to each remaining Members' Demand Share in accordance with a schedule established by Resolution of the Board.

(c) The payment of a proportionate share of the existing defaulted Member's Member Charges by Members shall not relieve the defaulting Member of its liability for those

payments. Cascade shall have a right of recovery from the defaulting Member on behalf of each Member. Cascade may commence such suits, actions or proceedings at law or in equity, including but not limited to suits for specific performance, as may be necessary or appropriate to enforce the obligations of this Contract against any defaulting Member. Cascade's right to enforce payments in this regard may be assigned to a treasurer, trustee, credit enhancement provider or other entity. Amounts recovered by Cascade as payment of amounts due shall be passed through to each Member in proportion to the share that each assumed, in cash or in credit against future Member Charges as the Board shall determine.

(d) The prevailing party in any such suit, action or proceeding, shall be entitled to recover its reasonable attorney fees and costs against the defaulting Member.

ARTICLE 8. Planning

Section 8.1 Water Supply Plan. Cascade must plan for its Members' water supply needs. That planning shall be to be compatible with the equivalent planning responsibilities of other wholesale water providers and with state, county and city planning responsibilities under the Growth Management Act. The Board must adopt, and may from time to time amend, a Water Supply Plan that must be based on no less than a twenty- (20) year planning horizon. Cascade shall coordinate its planning effort with local and regional utilities and other appropriate agencies and work to encourage cooperative region-wide planning and coordination.

Each Member shall actively participate in Cascade's water supply planning and shall provide to Cascade accurate data regarding its facilities and operations together with good-faith estimates of future needs and a description of any involvement in the development of

new Independent Supplies. Each Member's water comprehensive or system plan shall be consistent with any plans adopted by Cascade, and shall be consistent with applicable requirements of the Growth Management Act and comprehensive plans.

Section 8.2 Watershed Management Plan. Cascade may adopt Watershed Management Plans, as appropriate, for the watersheds within its service area provided that a Watershed Management Plan may take the place of, or may be incorporated into a Cascade Water Supply Plan. In fulfilling its responsibilities for watershed management, Cascade may enter into interlocal agreements with Non-Member municipalities to engage in watershed management, including development of Watershed Management Plans and the implementation and financing of such plans.

Section 8.3 System Reliability Methodology. Cascade shall develop and adopt a system reliability methodology for planning, operation and management purposes. Adoption and amendments to the system reliability methodology shall require a 65% Dual Majority Vote.

ARTICLE 9. Filings

This Contract must be filed with the King County Office of Records and Elections or with any other applicable county auditor, in accordance with RCW 39.34.040, and must be submitted for review by the Washington State Department of Health and the Washington State Department of Ecology, in accordance with RCW 39.34.050.

ARTICLE 10. Duration and Dissolution; Withdrawal

Section 10.1 Duration. Except as provided in Section 10.3, Cascade shall remain in existence for the longer of the following: (a) the period it holds any assets; (b) the period during which Bonds are outstanding; or (c) the period it continues to include Members.

Section 10.2 Withdrawals. A Member may notify Cascade of its intent to withdraw by delivery to Cascade of a Resolution of its legislative authority expressing such intent. Upon receipt of such Resolution, the Member shall lose its right to vote and the Board shall determine (a) the withdrawing Member's allocable share of the cost of the then-existing obligations of Cascade; and (b) the withdrawing Member's obligations to Cascade. "Then-existing obligations of Cascade" means obligations or costs incurred by Cascade as of the date the Member's withdrawal notice is received, including but not limited to Bond obligations, contract obligations and cash financed capital projects; provided that a withdrawing Member's allocable share shall in no event include an obligation for future expenses for which Cascade has not incurred a legal obligation; and provided further, that to the extent the Member's obligation (with respect to such costs) is re-paid over time, the Member shall be entitled to a credit for supply abandoned by the Member and is otherwise used by Cascade. A "withdrawing Member's obligation to Cascade" includes but is not limited to, the Member's share of fixed operating costs, any other expenses contained in Cascade's adopted budget for that year, and any assessments or other similar charges lawfully imposed by Cascade. For purposes of the preceding sentence, "fixed operating costs" shall be determined in the year of withdrawal, and the Member's obligation with respect to such costs shall be limited only to that amount required to pay for supply abandoned by the Member and not otherwise used by Cascade.

The allocable share of cost or obligations shall be determined by the Board, taking into consideration as deemed applicable by the Board: (a) the ratio of the Member's Demand Share to total Member demand; (b) the ratio of the Member's contribution to Cascade revenue to total Cascade revenue including RCRCs; (c) the cost or a portion of the cost of capital projects or facilities specially benefiting the Member; and (d) and any other factor the Board deems appropriate to consider. The Member's withdrawal shall be effective on payment of such allocable share or provision for arrangements to pay such allocable share that are satisfactory to the Board. Until the effective date of withdrawal, the Member shall continue to comply with all applicable provisions of this Interlocal Contract.

Upon withdrawal, except as provided in an Asset Transfer Agreement, the withdrawing Member shall have no right to, or interest in any Water Supply Assets owned by Cascade. The withdrawing Member shall be deemed to have abandoned any and all rights to service, to the use of Cascade Water Supply Assets or other rights with respect to Cascade (except as otherwise expressly provided in this Contract).

Notwithstanding the provisions of this Section 10.2, Cascade will, upon the withdrawal of a Member that has transferred operational control and management of (but not title to) an Independent Supply Asset to Cascade under Section 5.1, return operational control of such asset to the withdrawing Member. Return of operational control and management will be subject to: (a) continued use by Cascade, to the extent and for such time as the Board deems such use necessary for Cascade to continue providing service to its Members; and (b) payment or provision for payment of any Cascade costs, including but not limited, to those associated with the withdrawing Member's Independent Supply Asset.

The Board may establish additional generally applicable conditions and requirements for withdrawal.

Section 10.3 Dissolution. Cascade may be dissolved by a 65% Dual Majority Vote. Upon dissolution, except as provided in an Asset Transfer Agreement, Cascade's assets initially shall be held by its then current Members as tenants in common. Each Member's ownership interest must be based on that Member's Demand Share as of the time of the dissolution. Cascade's liabilities (including Bonds and other contractual obligations) initially shall be distributed based on Members Demand Shares as of the time of the dissolution. Assets and liabilities must be distributed in accordance with agreement or contract, under a voluntary mediation process, or by a court of law. A court may appoint an arbitrator or special master. Distribution shall be based on the best interests of efficient and economic water supply in the entire area served by the Members, subject to a rebuttable presumption that Water Supply Assets will be returned to the Member that originally transferred them to Cascade. That presumption may be overcome by a showing that another asset distribution is in the best interests of efficient and economic water supply. The proceeds of any sale of assets must be distributed among the then current Members based on the Demand Shares at the time of dissolution.

Section 10.4 Successor Entity. Notwithstanding the provisions of Section 10.3, upon a 65% Dual Majority Vote (ratified within one hundred and twenty (120) days by 65%), as measured by Dual Majority Vote of the Members' legislative authorities, all assets, liabilities, and obligations of Cascade may be transferred to any successor entity (including without limitation, a joint operating agency or other municipal corporation, as permitted under

state law), and all obligations of Members and parties contracting with Cascade become obligations to the successor entity.

ARTICLE 11. Amendments.

Amendments to this Contract shall be effective upon approval by 65% Dual Majority Vote (ratified within one hundred and twenty (120) days by 65%), as measured by Dual Majority Vote of the Members' legislative authorities.

ARTICLE 12. Applicable Law and Venue.

This Contract is governed by the laws of the state of Washington. The venue for any legal action arising from a dispute under this Contract is the Superior Court for King County.

ARTICLE 13. No Third Party Beneficiaries.

There are no third-party beneficiaries to this Contract except for the rights of Bond owners as provided in Section 5.3.2, no person or entity other than an agency signatory to this Contract shall have any rights hereunder or any authority to enforce its provisions, and any such rights or enforcement must be consistent with and subject to the terms of this Contract.

ARTICLE 14. Severability.

If any provision of this Contract or its application is held by a court of competent jurisdiction to be illegal, invalid, or void, the validity of the remaining provisions of this Contract or its application to other entities or circumstances shall not be affected. The remaining provisions continue in full force and effect, and the parties' rights and obligations must be construed and enforced as if the Contract did not contain the particular invalid provision. But if the invalid provision or its application is found by a court of competent jurisdiction to be substantive and to render performance of the remaining provisions

unworkable and infeasible, is found to seriously affect the consideration, and is inseparably connected to the remainder of the contract, the entire Contract is deemed void.

ARTICLE 15. Entire Agreement.

This Contract constitutes the entire and exclusive agreement between the parties relating to the specific matters covered in this Contract. All prior or contemporaneous verbal or written agreements, understandings, representations or practices relative to the foregoing are superseded, revoked and rendered ineffective for any purpose. This Contract may be altered, amended or revoked only as set forth in Article 11. No verbal agreement or implied covenant may be held to vary the terms of this Contract, any statute, law, or custom to the contrary notwithstanding.

Cascade Water Alliance

By: _____

Title: Chair Date: 10/31/11

Attest: _____

Title: Chief Executive Order Date: 11/1/11

Authorized by: Resolution No. 2011-17

Date: October 26, 2011

Cascade Water Alliance

ARTICLE 16. Execution.

This Contract may be executed in one or more counterparts.

Signatory Agency

By: Brian Ninjake

Title: Deputy City Mgr Date: 12/12/11

Attest: Lori Mclaughlin

Title: Contract Admin Date: 12/12/11

Authorized by (Resolution or Ordinance): # 8335

Date: 12/05/11

City of Bellevue

THIS PAGE IS INTENTIONALLY LEFT BLANK

ARTICLE 16. Execution.

This Contract may be executed in one or more counterparts.

Signatory Agency

By: Ava Frisinger

Title: Mayor Date: 1/18/12

Attest: Christine May

Title: City Clerk Date: 1/21/12

Authorized by (Resolution or Ordinance): _____

Date: _____

City of Issaquah

ARTICLE 16. Execution.

This Contract may be executed in one or more counterparts.

Signatory Agency

By: Marilynne Beard

Title: Assistant City Manager Date: 11/22/11

Attest: Kathy Anderson

Title: City Clerk Date: 11/22/11

Authorized by (Resolution or Ordinance): Resolution R4901

Date: 11/15/11

City of Kirkland

ARTICLE 16. Execution.

This Contract may be executed in one or more counterparts.

Signatory Agency

By: John Marchione

Title: City Mayor Date: 12/12/11

Attest: Michelle M. McGehee

Title: City Clerk Date: 12/12/11

Authorized by (Resolution or Ordinance): _____

Date: _____

City of Redmond

ARTICLE 16. Execution.

This Contract may be executed in one or more counterparts.

Signatory Agency

By: Mary Shustov

Title: President Date: 12.21.11

Attest: [illegible]

Title: General Manager Date: 12/21/11

Authorized by (Resolution or Ordinance): Unanimous Vote by the Board of Commissioners

Date: 12/19/11

Sammamish Plateau Water & Sewer District

ARTICLE 16. Execution.

This Contract may be executed in one or more counterparts.

Signatory Agency

By: _____

Title: Commissioner Date: 12-27-11

Attest: Cheryl Scheuerman

Title: General Manager Date: 12/27/11

Authorized by (Resolution or Ordinance): Resolution 11-09-480

Date: 12/27/11

Skyway W&S District

RECEIVED
DEC 2 - 2011
CASCADE WATER ALLIANCE

ARTICLE 16. Execution.

This Contract may be executed in one or more counterparts.

Signatory Agency

By: Ron Jim Haggerton

Title: Mayor Date: December 12, 2011

Attest: Melissa Hart

Title: Deputy City Clerk Date: December 12, 2011

Authorized by (Resolution or Ordinance): Approved by Council

Date: November 28, 2011 and December 5, 2011

City of Tukwila

2nd of 2 ORIGINALS

- 5 0

ARTICLE 16. Execution.

This Contract may be executed in one or more counterparts.

Signatory Agency

By: _____

Title: _____ Date: _____

Attest: _____

Title: _____ Date: _____

Authorized by (Resolution or Ordinance): _____

Date: _____

Covington Water District

CASCADE
WATER ALLIANCE

RECEIVED BOTHELL
RH2 ENGINEERING INC.
JOB NO: _____

APR 23 2007

ROUTE TO: MR
FILE: _____

April 19, 2007

Mr. Greg Neumann
City of Kirkland
Water Division Manager
123 Fifth Avenue
Kirkland, WA 98033

Board of Directors

Chair
Grant Degginger
City of Bellevue

Vice Chair
Lloyd Warren
Sammamish Plateau
Water & Sewer District

Secretary/Treasurer &
Chair, Finance Committee
Jim Haggerton
City of Tukwila

Chair, Membership
Committee
Mary-Alyce Burleigh
City of Kirkland

Chair, Public Affairs
Committee
John Marchione
City of Redmond

David Knight
Covington Water District

Joe Forkner
City of Issaquah

Jon Ault
Skyway Water & Sewer
District

General Manager

Michael A. Gagliardo

Dear Mr. Neuman:

In response to your request, this letter provides documentation of the Full Supply Commitment the City of Kirkland (the City) has as a Founding Member of the Cascade Water Alliance (Cascade), and how Cascade plans to meet that commitment.

The Cascade Interlocal Contract (the Interlocal) states that Cascade shall provide a Founding Member a Full Supply Commitment on the Cascade Supply Date (section 5.2.1). A Full Supply Commitment means that Cascade will provide for the Member's water supply need, net Independent Supply and on parity with all other Full Supply Commitments (Article 2. Definitions). However, no Member is guaranteed any given amount of supply or capacity. The Full Supply Commitment is also subject to water shortages and Cascade's ability to implement its plan (section 5.2.1).

Cascade's Transmission and Supply Plan (TSP) outlines the Water Supply Assets Cascade has or plans to develop in order to supply the needs of its Members. Cascade will provide for the City's needs through purchases from the City of Seattle and the City of Tacoma.

The demand projections in Table 4-11 of the Plan are consistent with the TSP. The 50-Year Declining Block Water Supply Agreement (the Block Contract) with Seattle and the Agreement for the Sale of Wholesale Water (the Wholesale Agreement) with Tacoma provides sufficient water to supply the City through its 6 and 20-year planning periods.

Cascade infrastructure development, as described in the TSP, are consistent with meeting the demands of Kirkland and other Cascade Members.

If you have any questions or need any other information, please contact me.

Sincerely,

Michael A. Gagliardo
General Manager

cc: Erin Leonhart
Michele Roh, RH2

11400 SE 8th Street — Suite 440 — Bellevue, WA 98004
Phone: (425) 453-0930 — Fax: (425) 453-0953
Website: www.cascadewater.org

CASCADE
WATER ALLIANCE

February 17, 2015

Board of Directors

Chair
John Marchione
Mayor
City of Redmond

Vice-Chair
Jim Haggerton
Mayor
City of Tukwila

Secretary/Treasurer
Fred Butler
Mayor
City of Issaquah

John Stokes
Councilmember
City of Bellevue

Penny Sweet
Deputy Mayor
City of Kirkland

Lloyd Warren
Commissioner
Sammamish Plateau
Water & Sewer District

Jon Ault
Commissioner
Skyway
Water & Sewer District

Chief Executive Officer
Chuck Clarke

Kathy Brown
Public Works Director
City of Kirkland
123 Fifth Avenue
Kirkland, WA 98033

Dear Kathy,

This letter is in response to your request for a description of Cascade Water Alliance's ("Cascade's") contractual commitment to the City of Kirkland and how the water supply agreement between the City of Seattle and Cascade supports that commitment. We understand this letter will be used in support of the City of Kirkland's Water System Plan, which is being reviewed by the Washington State Department of Health.

Cascade Water Alliance is a municipal corporation comprised of eight Member cities and special districts in King County, Washington, including the City of Kirkland. Cascade's primary role is to contract, plan and develop regional water supplies on behalf of its Members.

Cascade Members are parties to an agreement that created Cascade as a municipal corporation under Chapter 39.106 RCW. The *CASCADE WATER ALLIANCE JOINT MUNICIPAL UTILITIES SERVICES AGREEMENT*[1], dated March 28, 2012, ("Joint Agreement") replaced the *INTERLOCAL AGREEMENT*, which was first entered among the Members in 1999. The Joint Agreement contains Cascade's water supply commitment to the Members.

Individual Members own, operate and maintain their own water distribution systems. This includes, as applicable, water treatment for their independent water sources; maintenance of water quality within their reservoirs and distribution piping systems; and local monitoring of water quality conditions.

Cascade policies regarding service to the Members, set forth in Section 5.2 of the Joint Agreement, may be summarized as follows:

520 112th Avenue NE — Suite 400 — Bellevue, WA 98004
Phone: 425.453.0930 — Fax: 425.453.0953
Website: www.cascadewater.org

[1] http://www.codepublishing.com/WA/cascadewateralliance/

- Cascade must provide a full supply commitment to each of the current Members. This means Cascade must fully meet each Member's water needs, except for the portion met by the Member's independent supply and subject to certain limitations (as outlined below).

- Cascade is obligated to provide water supply to the entire service area of each Member (as that service area in the Member's adopted and approved Water System Plan as of the effective date of the Joint Agreement, March 28, 2012) whether or not some of that service area is within the Member's current jurisdictional boundaries and/or within the current urban growth boundary.

- Cascade is not obligated to provide water supply to service area expansions in or outside the urban growth boundary, unless Cascade agrees to such expanded service area. Cascade is not obligated to provide increased water supply to any Member if it is determined that the Member's planning process or plans are materially out of compliance with the requirements of applicable state law.

- Cascade's full supply commitment to the Members is subject to water shortages, Cascade's ability to implement its Water Supply Plan, and each Member's audited independent supply. If Cascade cannot fully meet its Members' needs during a shortage, the Members share the shortage in accordance with Cascade's Shortage Management Plan.

- Cascade must provide for Supply System development to meet the needs of additional water customers of Members, subject to consistency with applicable state law, Cascade's Water Supply Plan, orderly asset development, reasonable cost and financing capacity.

In 2012, Cascade adopted the 2012 TRANSMISSION AND SUPPLY PLAN ("TSP")[2] as the Cascade Water Supply Plan required by the Joint Agreement. Under the TSP, Cascade evaluated a wide range of water supply options to meet long-term needs, including additional or expanded contracted supplies from existing sources within the Central Puget Sound region, new surface water supplies, new ground water supplies, reclaimed above water used within the District's own service area. Under the preferred portfolio set forth in the TSP, available supplies are expected to exceed Cascade's water demand throughout the 50-year planning period.

One important component of Cascade's portfolio is the contract with the City of Seattle for delivery of water. The *2ND AMENDED AND RESTATED DECLINING BLOCK WATER SUPPLY AGREEMENT BETWEEN THE CITY OF SEATTLE AND CASCADE WATER ALLIANCE*, dated July 15, 2013 ("Block Contract")[3], provides for a base block supply of 30.3 MGD through 2023 that will be reduced in five-year increments to 24.3 MGD by 2046 and thereafter in annual increments until reaching 5.3 MGD in 2063, with a right to purchase up to 5.3 starting in 2064. In addition, under Block Contract, Seattle will make available a supplemental block through 2044.

---

[2] http://cascadewater.org/supply_plans_2012.php.

[3] http://cascadewater.org/water_purchase.php

Section 4.1.B. of the Block Contract anticipated that the City of Seattle and Cascade might periodically change the location, hydraulic gradient and instantaneous flows as each Cascade Point of Deliver ("POD") by a Management Agreement. *MANAGEMENT AGREEMENT NO. 9* was entered into in May 2014 to amend Exhibit II of the Block Contract, attached. This revision updated information about the PODs to each Member, the minimum hydraulic gradient upstream of the Seattle meter at each POD, and the maximum flow that Seattle is willing to guarantee under the Block Contract at each POD. Anticipating that non-Members and non-parties to the Block Contract, such as the Department of Health, might misunderstand the purpose of the information, Seattle and Cascade added footnote 3 providing:

> 3. These minimum hydraulic gradients and maximum flows relate to contractual conditions under the Agreement, but do not necessarily reflect practical or operational limits at particular PODs.

While Seattle must only provide a contractual guarantee of a maximum flow at a specific POD, the actual operation of a POD may actually exceed that maximum flow. In other words, the limitation on Seattle's obligation under the Block Contract does not necessarily reflect actual operation. In addition, Seattle and Cascade agreed to provide more flexibility within a Pipeline Segment and documented this intention in footnote 4:

> 4. Except as provided in Note 7 below, all or some of the maximum flows allocated to each POD may be reallocated to another POD on the same Pipeline Segment Number, including those PODs designated as Backup Services. In that case, minimum hydraulic gradients are not guaranteed.

For example, POD #74 and #75 serve Kirkland and are both within Pipeline Segment #1. The maximum flow may be reallocated between those two PODs. If actual delivery constraints develop, Cascade will work with Seattle and the Member to take the necessary actions (contract amendment or facility changes) to resolve the issues.

Finally, Seattle contractual guarantee to Cascade does not act as a limit to Cascade's obligation to provide a full supply commitment to each of the current Members. As described above, Cascade is obligated under the Joint Agreement to provide water supply to the entire service area of each Member. Under the preferred portfolio set forth in the TSP, available supplies are expected to exceed Cascade's water demand throughout the 50-year planning period.

I trust that this explanation will be helpful to you.

Sincerely,

Chuck

Chuck Clarke
Chief Executive Officer

Attachment: Management Agreement No.9

SEATTLE PUBLIC UTILITIES & CASCADE WATER ALLIANCE
MANAGEMENT AGREEMENT No. 9

REVISIONS TO EXHIBIT II

This Management Agreement No. 9 is entered into pursuant to Section 4.1 of the 2nd Amended and Restated Declining Block Water Supply Agreement between the City of Seattle ("Seattle") and the Cascade Water Alliance ("Cascade"), dated July 15, 2013 ("Agreement").

Management Agreement

1. The revised exhibit attached and incorporated herein as "Revised Exhibit II" replaces the existing Exhibit II in the Agreement in its entirety.

Agreed to:

Ray Hoffman	5/20/14	Chuck Clarke	5/27/14
Ray Hoffman, Director Seattle Public Utilities	Date	Chuck Clarke, CEO Cascade Water Alliance	Date

Attachment: Revised Exhibit II, dated March 27, 2014

Exhibit II

CASCADE POINTS OF DELIVERY[1], MINIMUM HYDRAULIC GRADIENTS, AND MAXIMUM FLOW RATES OF WATER SUPPLIED

POINT OF DELIVERY (POD)							MINIMUM HYDRAULIC GRADIENT UPSTREAM OF SEATTLE METER (FEET NAVD-88 Datum) [3]	MAXIMUM FLOW UP TO WHICH HYDRAULIC GRADIENT IS GUARANTEED UNDER THE AGREEMENT [3] [4] (gpm)
SEATTLE METER LOCATION	CASCADE MEMBER OPERATING DOWNSTREAM OF POD	SEATTLE STATION NUMBER	SEATTLE PIPELINE SEGMENT NUMBER	SEATTLE METER SIZE (IN.)	CASCADE MEMBERS SERVED	SIZE OF CASCADE MEMBER METER(S), (IN.) [2]		
132nd Ave. NE & NE 113th Street	Kirkland	74	1	10"	Kirkland, Redmond	12"	555	3,540
132nd Ave. NE & NE 85th Street	Kirkland	75	1	16"	Kirkland, Redmond	None	535	4,890
140th Ave. NE & NE 70th Street	Kirkland	72	2	12"	Kirkland, Redmond	12"	520	1,430
140th Ave. NE & 40th Street	Bellevue	65	2	10"	Bellevue, Redmond	18"	500	3,800
132nd Ave. NE & Bel-Red Road	Bellevue	62	2	12"	Bellevue	12"	470	4,200
132nd Ave. NE & NE 24th Street	Bellevue	63	2	10"	Bellevue	12"/8" [5]	455	3,900
152nd Ave. NE & NE 8th Street	Bellevue	61	2	24"	Bellevue, Redmond	16"	460	3,000
145th Pl. SE & SE 28th Street	Bellevue	58	3	12"	Bellevue	16"	470	2,700
14509 SE Newport Way	Bellevue	60	3	10"	Bellevue. Issaquah	12"	525	2,300
14509 SE Newport Way	Bellevue	182	3	10"	Bellevue, Issaquah, Sammamish Plateau	12"/8"/8" [6]	525	5,810
132nd Ave SE & SE 26th ST	Bellevue	59	8	8"	Bellevue	8"	425	1,300
128th Ave. SE & Newport Way	Bellevue	56	8	8"	Bellevue	8"	435	800
128th Ave SE & SE 56th ST	Bellevue	47	8	8"	Bellevue	6"	440	Backup service
128th Ave SE & Newport Way	Bellevue	55	8	6"	Bellevue	6"	435	625
128th Ave SE & SE 70th ST	N/A	52	8	12"	Bellevue		445	1700 [7]

POINT OF DELIVERY (POD)							MINIMUM HYDRAULIC GRADIENT UPSTREAM OF SEATTLE METER (FEET NAVD-88 Datum) [3]	MAXIMUM FLOW UP TO WHICH HYDRAULIC GRADIENT IS GUARANTEED UNDER THE AGREEMENT [3] [4] (gpm)
SEATTLE METER LOCATION	CASCADE MEMBER OPERATING DOWNSTREAM OF POD	SEATTLE STATION NUMBER	SEATTLE PIPELINE SEGMENT NUMBER	SEATTLE METER SIZE (IN.)	CASCADE MEMBERS SERVED	SIZE OF CASCADE MEMBER METER(S), (IN.) [2]		
Mercer Is. Pipeline & 108th Ave. SE	Bellevue	66	9	8"	Bellevue	8"	420	800
124th Ave SE & SE 38 PL	Bellevue	124	9	8"	Bellevue	8"	425	1,400
Cornell Ave S & S 112th Street	Skyway	172	4	6"	Skyway	None	375	Backup service [8]
84th Ave. S & S 134th Street	Skyway	1	10	8"	Skyway	None	455	210
Beacon Ave S & S 124th Street	Skyway	5	10	8"	Skyway	8"	455	720
W Marginal Place & S 102nd ST	Tukwila	170	5	12"	Tukwila	12"	300	300
51st Ave S & S Leo Street	Tukwila	169	12	8"	Tukwila	8"	455	70
47th Ave S & S Victor Street	Tukwila	173	12	6"	Tukwila	6"	425	Backup service
South Center Parkway & Tukwila Parkway	Tukwila	13	13	10"	Tukwila	10"	460	800
West Valley Hwy & S 162nd Street	Tukwila	14	13	8"	Tukwila	8"	460	Backup service
Christensen Rd. & Baker Rd	Tukwila	15	13	8"	Tukwila	10"	460	840
53rd Ave S & S 160th Street	Tukwila	16	13	6"	Tukwila	6"	460	20
E Marginal Way & S 112th Street	Tukwila	183	15	12"	Tukwila	12"	445	900
7749 E Marginal Way S	Tukwila	168	20	12"	Tukwila	12"	N/A	Backup service [8]
Trilogy Parkway NE & NE 125 Street (East meter)	Redmond	164	28	10"	Redmond, Sammamish Plateau	16"	610	2900 [9]
Trilogy Parkway NE & NE 125 Street (West Meter)	Redmond	186	28	10"	Redmond, Sammamish Plateau	16"	610	Redundant Supply [9]
160th Ave NE & NE 104th Street	Redmond	165	28	10"	Redmond	16"	515	2420 [10]
NE 172nd Street & Tolt Pipeline No. 2	Redmond	185	28	6"	Redmond	16"	515	Redundant Supply [10]
							TOTAL:	51,375

POINT OF DELIVERY (POD)							MINIMUM HYDRAULIC GRADIENT UPSTREAM OF SEATTLE METER (FEET NAVD-88 Datum) [3]	MAXIMUM FLOW UP TO WHICH HYDRAULIC GRADIENT IS GUARANTEED UNDER THE AGREEMENT [3] [4] (gpm)
SEATTLE METER LOCATION	CASCADE MEMBER OPERATING DOWNSTREAM OF POD	SEATTLE STATION NUMBER	SEATTLE PIPELINE SEGMENT NUMBER	SEATTLE METER SIZE (IN.)	CASCADE MEMBERS SERVED	SIZE OF CASCADE MEMBER METER(S), (IN.) [2]		

Notes:

1. All Points of Delivery (PODs) provide a wholesale level of service. Seattle bears no responsibility for retail service level obligations, such as fire flow or emergency backup.
2. This column is for informational purposes only, i.e., there are no related terms or conditions under the Agreement. Cascade will be responsible for providing Seattle with updated Cascade Member information from time to time.
3. These minimum hydraulic gradients and maximum flows relate to contractual conditions under the Agreement, but do not necessarily reflect practical or operational limits at particular PODs.
4. Except as provided in Note 7 below, all or some of the maximum flows allocated to each POD may be reallocated to another POD on the same Pipeline Segment Number, including those PODs designated as Backup Services. In that case, minimum hydraulic gradients are not guaranteed.
5. Flow branches into two metered Bellevue pipelines downstream of Station 63.
6. The 12" Bellevue meter is located at 4112 161st Ave SE. The two 8" meters that each serve Issaquah and the Sammamish Plateau are located at 16104 SE Newport Way in a single meter vault.
7. The maximum flow shown is the portion serving Bellevue via Coal Creek Utility District. All or a portion of this maximum flow may be reallocated from this POD to other PODs on the same Pipeline Segment Number, but additional flows from other PODs may not be reallocated to this POD.
8. When a Backup Service is the only POD on a Pipeline Segment Number, the Cascade Member operating the Backup Service can re-allocate all or portions of the maximum flows from other PODs it operates to that Backup Service, regardless of Pipeline Segment Number. In that case minimum hydraulic gradients are not guaranteed.
9. The maximum flow that can be shared between Stations 164 and 186 is 2,900 gpm.
10. The maximum flow that can be shared between Stations 165 and 185 is 2,420 gpm.

APPENDIX C

CWA Contracts with Seattle and TPU

2ND AMENDED AND RESTATED

DECLINING BLOCK

WATER SUPPLY AGREEMENT BETWEEN

THE CITY OF SEATTLE

AND

THE CASCADE WATER ALLIANCE

July 15, 2013

TABLE OF CONTENTS

LIST OF SECTIONS

ARTICLE I	AGREEMENT	2
ARTICLE II	DEFINITIONS	2
ARTICLE III	SUPPLY	4
ARTICLE IV	TRANSMISSION	9
ARTICLE V	WATER QUALITY	11
ARTICLE VI	CONSERVATION	11
ARTICLE VII	PLANNING	11
ARTICLE VIII	COST RECOVERY	12
ARTICLE IX	ADMINISTRATION	20
ARTICLE X	TECHNICAL COMMITTEE	21
ARTICLE XI	DISPUTE RESOLUTION	22
ARTICLE XII	UNFORESEEN AND UNAVOIDABLE EVENTS	22

LIST OF EXHIBITS

I. Other Agreements

II. Cascade Points of Delivery

III. Block Allocations of Water by Individual Seattle Wholesale Customers

IV. Existing Supply System Facilities

V. Existing Transmission System Facilities

VI. Cost Centers used for Operations Cost Indexes

VII. Cascade Sub-regional System Facilities

2nd AMENDED AND RESTATED DECLINING BLOCK WATER SUPPLY AGREEMENT BETWEEN THE CITY OF SEATTLE AND THE CASCADE WATER ALLIANCE

This 2nd amendment to and restatement of the Declining Block Water Supply Agreement between the City of Seattle, a municipal corporation ("Seattle"), and the Cascade Water Alliance, a joint municipal utility services authority formed under authority of Chapter 39.106 RCW ("Cascade"), is dated and effective this 15th day of July, 2013 ("Agreement").

Whereas, Seattle is a regional water supplier currently providing service to numerous water utilities in King County, Washington; and

Whereas, the Cascade Water Alliance was formed for the purpose of providing water supply to its Members; and

Whereas, in 2004, the Cascade Water Alliance and Seattle entered into a 50-year Declining Block Water Supply Agreement, which was amended and restated in 2008; and

Whereas, in 2012, Cascade converted from a non-profit corporation formed under the Interlocal Cooperation Act to a municipal corporation under the Joint Municipal Utility Services Act, Chapter 39.106 RCW; and

Whereas, regional municipal water supply forecasts show a demand growing more slowly than previously forecast over the next 50 years resulting in an opportunity to reconsider future supply planning by both Parties; and

Whereas, after meeting the demands of its existing retail and wholesale customers, Seattle has water supply available to sell for a defined period with minimal risk of triggering the need for new supply development prior to 2060; and

Whereas, Cascade has determined that it can defer development of its Lake Tapps water right by purchasing additional block water from Seattle for a defined period and using its members' independent supplies; and

Whereas, temporary sales of additional block water from Seattle to Cascade would bring additional revenue into the Seattle system and allow Cascade to defer substantial capital investment to develop its Lake Tapps water right into the future; and

Whereas, Cascade and Seattle desire to amend the 2008 Amended and Restated 50-year Declining Block Supply Water Supply Agreement to restructure the supplemental block of water through 2023, to extend the total block of water from 2024 through 2044 and to restructure the declining block increments, all of which are mutually beneficial to the Parties and their respective customers by maximizing existing resources and stabilizing rate paths; and

Whereas, the Parties intend that this amendment to the Agreement continue the existing structure as a declining block contract based on the expectation that Cascade will develop its own independent supply and that Seattle will have no further obligation to provide additional water to Cascade during or beyond the amended term of this Agreement.

Now therefore, Seattle and Cascade agree to the following terms and conditions for the provision and purchase of a declining block water supply.

ARTICLE I - AGREEMENT

Seattle agrees to sell to Cascade and Cascade agrees to purchase from Seattle, according to the terms of this Agreement, a wholesale supply of water and the transmission capacity sufficient to deliver such water supply to Cascade.

The term of this Agreement is January 1, 2004 through December 31, 2063.

Beginning January 2020, and again each January at 5-year intervals, either Cascade or Seattle may request consideration of further extension of the supply commitment. Neither Party is obligated to agree to such discussion or any related extension or other amendment; and any extension or amendment would be subject only to terms negotiated at the time of such written amendment to this Agreement in accordance with Section 9.4.

Apart from the contract right to purchase water from Seattle under the terms of this Agreement, neither Cascade nor any Cascade Member has any right or claim to the Seattle Water System, the Cedar and Tolt Rivers and to the Seattle Well Fields, or to any other water right or claim held by Seattle. Likewise, Seattle shall have no right or claim to the Cascade Water System or to any groundwater right or claim held by any Cascade Member, or to any future source of supply developed by Cascade or by any of its Members. At the termination of this Agreement, Seattle shall have no further obligation to supply Cascade or any Cascade Member with water, with the exception of Cascade's right to purchase up to 5.3 MGD as set forth in Section 3.5.

ARTICLE II – DEFINITIONS

8 MGD Wholesale Water Supply. All or any portion of the 8 MGD Wholesale Water Supply as that term is defined in the Amended and Restated Agreement for the Sale of Wholesale Water between Cascade and the City of Tacoma, dated December 31, 2012. The Parties understand and agree that the 4 MGD and 6 MGD Wholesale Water Supplies under that same agreement are not covered by this Agreement as they would be wholesale sales by the City of Tacoma, not Cascade.

Average Daily Demand ("ADD"). The amount of water supplied by the Seattle Water System to Cascade in a calendar year divided by the number of days in that calendar year.

Base Block. The amount of water Seattle commits to supply Cascade beginning on January 1, 2004 through the termination date of this Agreement, as specifically scheduled in Section 3.4 A.

Cascade Block. The total amount of water Seattle commits to supply Cascade under this Agreement, composed of the Base Block and the Supplemental Block, as more fully expressed in Article III.

Cascade Member. A Member of Cascade as that term is defined in the Cascade Water Alliance Joint Municipal Utility Services Agreement, dated March 28, 2012, as it may be amended from time to time.

Cascade Points of Delivery. Seattle owned and operated specific metered delivery locations serving Cascade Members as listed in Exhibit II, at which Seattle provides a defined level of service, beginning from the outlet from the supply pipeline to the end of the Seattle meter vault, including the water meter and associated appurtenances.

Cascade Sub-regional System. Seattle owned and operated Transmission System assets serving Cascade Members as listed in Exhibit VII.

Cascade Water System. Tangible and intangible assets owned or operated by Cascade useable in connection with the provision of water supply.

Existing Supply System Facilities. Seattle owned and operated Supply System assets as listed in Exhibit IV.

Existing Transmission System Facilities. Seattle owned and operated Transmission System assets as listed in Exhibit V.

Firm Yield. The estimated amount of water that Seattle's Supply System can provide according to Seattle's supply reliability standard and expressed in annual average MGD. For purposes of this Agreement, Seattle's Firm Yield is 171 MGD, unless modified pursuant to Section 3.2.

Full or Partial Requirements Customer Commodity Charge. The rate charged per 100 cubic feet (ccf) to wholesale customers served under Full or Partial Requirements Contracts in accordance with Seattle Municipal Code (SMC) 21.04.440.E.2, as it may be amended from time to time.

Management Agreement. A written agreement, pertaining to subjects authorized by this Agreement, between the Director, Seattle Public Utilities, and the Chief Executive Officer ("CEO"), Cascade Water Alliance.

MGD. Million gallons per day.

Party (ies). Seattle and/or Cascade, as well as their respective successors and assigns.

Peak Month. The consecutive thirty- (30) day period during a calendar year in which Cascade puts its maximum demand upon the Seattle Water System.

Peak Month Factor. Average Daily Demand multiplied by 1.69

Peak Season. June 1 through September 30.

Peak Season Factor. Average Daily Demand multiplied by 1.35

Rate of Return on Investment. The average cost of debt of the Seattle water system plus 1.5 percent.

Seattle's Service Area Boundary. Seattle's then-current designated place of use of Seattle's water certificates, permits, claims or service area under Seattle's approved water system plan at the time of the sale in accordance with applicable state law.

Seattle Water System. All Seattle owned and operated water rights and claims and all Seattle owned and operated facilities, including the Seattle Existing Supply System Facilities as listed in Exhibit IV, the Seattle Existing Transmission System Facilities as listed in Exhibit V, Cascade and other Sub-regional Facilities and Points of Delivery, together comprise the Seattle Water System.

Sub-regional Facilities. Any facilities owned and operated by Seattle that are not identified as Existing Supply System Facilities (Exhibit IV), Existing Transmission System Facilities (Exhibit V), or Cascade Sub-regional System (Exhibit VII).

Supplemental Block. The amount of water Seattle commits to supply Cascade beginning on January 1, 2009 through December 31, 2044, as specifically scheduled in Section 3.4 B.

White River – Lake Tapps Reservoir Project. Cascade's project to develop a new municipal drinking water supply in the future from the White River and Lake Tapps under water rights issued in 2010 under Permit Nos. S2-29920(A) and (B), S2-29934, R2-29935, and Claim No. 160822, as more particularly defined in Cascade's approved Transmission and Supply Plan.

ARTICLE III - SUPPLY

3.1 A. Each calendar year from the effective date of this Agreement, Seattle shall make available to Cascade the Base Block, according to the schedule set forth in Section 3.4 A.

B. Each calendar year commencing January 1, 2009 and terminating on December 31, 2044, Seattle shall make available to Cascade the Supplemental Block, according to the schedule set forth in Section 3.4 B.

3.2 In the event the Firm Yield of the Seattle Supply System is reduced, the Cascade Block will be reduced in proportion to such reduction in Firm Yield only if the Firm Yield is reduced by order of a State or Federal regulatory agency with appropriate jurisdiction or as the result of updated climatic data utilized in the hydraulic model used to calculate Firm Yield, unless the Parties mutually agree by Management Agreement to a different reduction or no reduction to the Cascade Block if it is in each their best interests at the time. In the event of any reduction to the Cascade Block, the Base and Supplemental Blocks will be reduced in the same proportion, as appropriate. Cascade shall be notified of any potential change in Firm Yield as far in advance as possible, but in no event less than 180 days prior to the effective date of an adjustment to Firm Yield that affects the Cascade Block.

3.3 Seattle will supply the Cascade Block during the Peak Season and Peak Month as follows below and will be adjusted proportionately in relation to the decreases identified in Section 3.4:

A. During the Peak Season, Seattle shall make available the Cascade Block multiplied by the Peak Season Factor.

B. During the Peak Month, Seattle shall make available the Cascade Block multiplied by the Peak Month Factor.

3.4

A. The Base Block shall be supplied in accordance with the following schedule:

1. Beginning January 1, 2004 through December 31, 2023, Seattle shall make available to Cascade 30.3 MGD Average Daily Demand.
2. Beginning January 1, 2024 through December 31, 2029, Seattle shall make available to Cascade 29.3 MGD Average Daily Demand.
3. Beginning January 1, 2030 through December 31, 2034, Seattle shall make available to Cascade 26.8 MGD Average Daily Demand.
4. Beginning January 1, 2035 through December 31, 2045, Seattle shall make available to Cascade 24.3 MGD Average Daily Demand.
5. Beginning January 1, 2046, Seattle shall make available to Cascade 23.3 MGD Average Daily Demand, and on each January 1 thereafter through December 31, 2063, the amount will decline by 1 MGD Average Daily Demand until it reaches5.3 MGD Average Daily Demand.
6. Beginning January 1, 2064, Seattle shall make available to Cascade up to 5.3 MGD Average Daily Demand in accordance with Section 3.5.

B. The Supplemental Block shall be supplied in accordance with the following schedule:

1. Beginning January 1, 2009 through December 31, 2023, Seattle shall make available to Cascade 3.0 MGD Average Daily Demand.

2. Beginning January 1, 2024 through December 31, 2029, Seattle shall make available to Cascade 4.0 MGD Average Daily Demand.

3. Beginning January 1, 2030 through December 31, 2034, Seattle shall make available to Cascade 6.5 MGD Average Daily Demand.

4. Beginning January 1, 2035 through December 31, 2039 Seattle shall make available to Cascade 9.0 MGD Average Daily Demand.
5. Beginning January 1, 2040 through December 31, 2040 Seattle shall make available to Cascade 7.0 MGD Average Daily Demand.
6. Beginning January 1, 2041 through December 31, 2041 Seattle shall make available to Cascade 5.0 MGD Average Daily Demand.
7. Beginning January 1, 2042 through December 31, 2042 Seattle shall make available to Cascade 3.0 MGD Average Daily Demand.
8. Beginning January 1, 2043 through December 31, 2043 Seattle shall make available to Cascade 2.0 MGD Average Daily Demand.
9. Beginning January 1, 2044 through December 31, 2044 Seattle shall make available to Cascade 1.0 MGD Average Daily Demand.

3.5 Beginning January 1, 2064, Cascade shall have the right to purchase up to 5.3 MGD for the sole purpose of serving Cascade Members that cannot be economically served by any other means than the Seattle Transmission System. The right to purchase up to 5.3 MGD shall be exercised by Cascade by providing written notice to Seattle by December 31, 2062, specifying the Block of water from zero to 5.3 MGD and the Cascade Members to be served by that Block. If Cascade exercises this right, the parties shall enter into a separate agreement.

3.6

A. All water supplied to Cascade under this Agreement is provided with the intent to serve Cascade Members' retail customers without limitation.

B. Cascade or Cascade Members may sell water supplied under this Agreement, or water from their respective independent supplies offset by water supplied under this Agreement, for wholesale purposes to non-Cascade Members only as follows:

1. <u>For temporary emergency purposes</u> under those specific emergency intertie agreements identified in Exhibit I.

2. <u>To wholesale customers of Cascade or a Cascade Member, as of January 31, 2013</u>. The parties will amend Exhibit I by Management Agreement by August 1, 2013 to reflect all of the non-Cascade Members being served under this provision.

3. <u>Within Seattle's Service Area Boundary</u>, except for then-current Seattle Wholesale Customers, provided that: (a) Cascade obtains Seattle's prior written consent; and (b) an equivalent amount of the Base Block will be converted to Supplemental Block and charged in accordance with Section 8.8 from the effective date of the sale. Seattle's consent may be subject to conditions Seattle deems reasonably necessary to protect the Seattle Regional Water Supply System. This provision

will not apply to any wholesale sales authorized under other provisions of this Section 3.6.

4. Outside of Seattle's Service Area Boundary, provided that: (a) Cascade provides advance written notice to Seattle in a form mutually agreed by the Parties by Management Agreement; and (b) an equivalent amount of the Base Block will be converted to Supplemental Block and charged in accordance with Section 8.8 from the effective date of the sale.

5. From the 8 MGD Wholesale Water Supply from the City of Tacoma or water supplies from Cascade's White River - Lake Tapps Reservoir Project, except not to then-current Seattle Wholesale Customers, provided that: (a) Cascade provides advance written notice to Seattle in a form mutually agreed by the Parties by Management Agreement; and (b) an equivalent amount of the Base Block will be converted to Supplemental Block and charged in accordance with Section 8.8 from the effective date of the sale.

6. To then-current Seattle Wholesale Customers provided that: (a) Cascade obtains Seattle's prior written consent; and (b) the full amount of the Base Block will be converted to Supplemental Block and charged in accordance with Section 8.8 from the effective date of the sale. Seattle's consent may be subject to conditions Seattle deems reasonably necessary to protect the Seattle Regional Water Supply System.

7. Offsets. For the purposes of this Section 3.6 B, the Parties understand and agree that any wholesale sales made by Cascade or a Cascade Member prior to the full implementation and delivery of water supplies from Phase 2 of Cascade's White River – Lake Tapps Reservoir Project, as more particularly defined in Cascade's 2012 Transmission and Supply Plan, are made with water supplied under this Agreement or water from Cascade or Cascade Member's respective independent supplies offset by water supplied under this Agreement and that the applicable provisions of this Section 3.6 B apply to such wholesale sales. After the full implementation and delivery of water supplies from Phase 2 of Cascade's White River – Lake Tapps Reservoir Project, the Parties understand and agree that the applicable provisions of this Section 3.6 B will apply unless Cascade demonstrates and Seattle agrees that a particular wholesale sale by Cascade or a Cascade Member is from surplus independent supplies without offset by water supplied under this Agreement.

3.7 All water supplied under this Agreement must be used within Seattle's Service Area Boundary.

3.8 During the term of this Agreement, if a Seattle Wholesale Customer identified in Exhibit III becomes a Cascade Member, Seattle will release that customer from its obligations

under its existing water supply contract with Seattle in accordance with the provisions of such contract and the Supplemental Block will be increased by the allocated block of water identified in Exhibit III for that customer, with a corresponding proportional increase to any adjustments or limitations to the Cascade Block under Sections 3.3, 3.4 and 3.14. If that entity takes delivery of all or a portion of its water through a Sub-regional Facility, Cascade and Seattle shall enter into a Management Agreement to include the costs of such facility under this Agreement prior to increasing the Supplemental Block.

3.9 For the purpose of determining the consecutive 30-day period, which constitutes the Peak Month, a daily average delivery may be calculated so long as meter readings occur no fewer than 26 days apart. In such cases, daily average delivery shall be calculated by dividing the total deliveries by the actual number of days between meter readings. Periods less than 26 days shall not be applicable for determining the Peak Month.

3.10 Daily average delivery during the Peak Season may be calculated using meter readings taken closest to June 1 and September 30 each year and dividing the total delivery during such time by the actual number of days between meter readings. Periods less than 110 days shall not be applicable for determining the Peak Season.

3.11 Average Daily Demand for a calendar year may be calculated by using the monthly meter readings around the 20th of each month from February through December of that calendar year plus a prorated amount for the number of days in January from the January meter read in that calendar year plus a prorated amount for the number of days in December from the January meter read in the following calendar year and dividing the total deliveries during such time by the actual number of days in that calendar year. The year-end prorations used to calculate ADD may be adjusted by Management Agreement based on changed meter reading procedures.

3.12 Seattle shall endeavor to read the meters at all Cascade Points of Delivery on the same day. In the event that meters at any Cascade Point of Delivery cannot be read on the same day, all meter reads for that metering period shall be considered to occur on the day on which the meters measuring the majority of the Cascade volume for that metering period were read.

3.13 Normal operation of the water system includes the periodic shutdown of various facilities for routine maintenance, rehabilitation and replacement. Seattle and Cascade shall cooperate in the timing of such activities. Cascade shall not use such activities as evidence of the unavailability of supply or transmission services provided by Seattle under this Agreement so long as Seattle proceeds in good faith to restore such facilities to service.

3.14 Nothing in this Agreement, including, but not limited to, any penalties for exceedance of the Cascade Block, shall be construed to require Seattle to sell or deliver water in excess of the following amounts:

A. Total deliveries during a calendar year in the amount of the Cascade Block multiplied by 365 days (366 in leap years);
B. Total deliveries during the Peak Season in the amount of the Cascade Block multiplied by 165 days;
C. Total deliveries during the Peak Month in the amount of the Cascade Block multiplied by 51 days;
D. Total deliveries during any consecutive 30-day period from October 1 to May 30 in the amount of the Cascade Block multiplied by 30 days;
E. Total deliveries during any consecutive 7-day period in the amount the Cascade Block multiplied by 13 days;
F. Total deliveries within any one-day period in the amount of the Cascade Block multiplied by 2 days.

Upon notice by Seattle of exceedance of these limits, Cascade must immediately reduce its deliveries of Seattle water. Upon the failure of Cascade to reduce its demand, Seattle may install and operate devices that limit deliveries to Cascade to these amounts, all at Cascade's expense.

ARTICLE IV - TRANSMISSION

4.1 Each calendar year during the term of this Agreement, Seattle shall sell to Cascade and Cascade shall purchase from Seattle capacity in the Seattle Transmission System according to the following terms and conditions:

A. Seattle shall provide capacity sufficient to supply the Cascade Block to Cascade at Cascade Points of Delivery. Adjustments in the Cascade Block shall result in an equivalent adjustment in Seattle's Transmission capacity commitment. The specific Cascade Points of Delivery that are to be adjusted and the adjustment for each Cascade Point of Delivery shall be determined by Management Agreement so long as a determination is made that there is no adverse impact on the overall Seattle Water System.

B. Cascade Points of Delivery are specifically identified in Exhibit II. The Parties may amend the location, hydraulic gradient and instantaneous flows at each Cascade Point of Delivery by Management Agreement.

C. Seattle shall supply water at the inlet side of each Cascade Point of Delivery meter at a hydraulic gradient no less than the minimum identified in Exhibit II provided that the instantaneous flow does not to exceed that set forth in the same exhibit. Seattle may change the minimum hydraulic gradient at any Cascade Point of Delivery once during any fifteen-year period, provided that four years prior notice is given to Cascade. Under emergency conditions or other unusual short-term operating situations Seattle shall not be obligated to meet minimum hydraulic gradients.

D. Cascade may request changes to existing or additional Cascade Points of Delivery from the Existing Transmission System Facilities, which Seattle may approve or reject at its

sole discretion. Seattle shall establish the minimum hydraulic gradient for any new Cascade Point of Delivery at its sole discretion, after consultation with Cascade. The Parties may amend Exhibit II to reflect the changes in or additional Cascade Points of Delivery under this section by Management Agreement.

E. No provision of this Agreement shall be construed to require Seattle to provide flows greater than those identified in Exhibit II. Upon notice by Seattle, Cascade shall immediately reduce Cascade deliveries at a Cascade Point of Delivery to not more than those identified in Exhibit II. In the event that Cascade is unwilling or unable to reduce deliveries as required under this provision, Seattle may install and operate flow restricting devices at non-compliant Cascade Points of Delivery, all at Cascade expense.

4.2 Cascade is served, in part, by transmission facilities referred to as the Cascade Sub-regional System listed in Exhibit VII. The costs of operating, maintaining, repairing and replacing these facilities shall be the responsibility of Cascade as outlined in Sections 8.6 and 8.7 below. The Parties may amend Exhibit VII by Management Agreement.

4.3 Nothing herein shall restrict Cascade's authority to construct an independent water transmission system for its own water supply.

4.4 Cascade Members have interties, listed in Exhibit I, with adjacent water utilities that are non-Cascade members. The Parties may amend Exhibit I by Management Agreement. Any existing agreements related to the billing and meter reading arrangements for these interties are assumed as a part of this Agreement. If new interconnections between Cascade or Cascade Members and non-Cascade members require similar billing and meter reading arrangements, such arrangements shall be defined in an agreement to be entered into by Cascade, Seattle and the non-Cascade member.

4.5 A. Transmission Wheeling. Seattle, at its discretion, may make excess transmission capacity available for a fee and under conditions it deems reasonable, for purposes of wheeling other water supply between points within the Seattle Water System to Cascade or others.

B. Interconnection/Intertie.

1. In the event Cascade requests an interconnection to the Seattle Water System to take delivery of any other water supplied to Cascade under separate water supply contracts or arrangements, Cascade shall, at its expense, be responsible for the design, engineering, permitting and construction of any and all infrastructure necessary to interconnect to the Seattle Water System. Any interconnection to the Seattle Water System or intertie between the Seattle Water System and another water supply system will be subject to Seattle's review, approval and such conditions and requirements as Seattle and the other

water supply system owner may determine to be reasonably necessary in order to provide and maintain the safe and efficient design, function, capacity, water quality, integrity and reliability of their respective water supply systems.

2. Seattle may request that the interconnection allow for joint use for Seattle's purposes subject to mutually agreed upon terms.

ARTICLE V - WATER QUALITY

Seattle shall be responsible for water quality within the Seattle Water System, and it shall supply water to Cascade, that meets or exceeds federal and state drinking water quality standards, as those standards may change from time to time.

ARTICLE VI - CONSERVATION

Each Party is committed to the principles of water conservation and each intends to achieve its anticipated savings by implementing water conservation programs either unilaterally or in partnership with other agencies. Cascade understands and agrees that as an existing wholesale customer of Seattle, this commitment includes good faith efforts in meeting the intent of Part 1, Section B.1.5 of the Settlement Agreement between the Muckleshoot Indian Tribe and the National Marine Fisheries Services and the City of Seattle (Civ. No. 03-3775JLR), by implementing, through its own water conservation program(s), conservation measures that provide comparable savings to those implemented by Seattle within the Seattle Retail Distribution System.

ARTICLE VII - PLANNING AND SHORTAGE MANAGEMENT

7.1 Each Party recognizes its obligation to plan for water supply and distribution in compliance with the State Department of Health water system planning regulations. Each Party shall develop a water system plan for its service area and the Parties shall coordinate those elements of overlapping responsibilities.

7.2 Cascade and Seattle shall coordinate the development, adoption and implementation of their respective Water Shortage Management Plans. Before invoking its Water Shortage Management Plan, the Parties shall communicate with each other concerning current and projected water supply conditions.

7.3 Seattle has negotiated agreements with federal agencies, state agencies and tribes for the long term preservation and enhancement of watersheds and in-stream beneficial uses and habitat. Such agreements have direct bearing on decisions to curtail the amount of water available for municipal and industrial water supply in any given season. Any water use restrictions imposed under the terms of such agreements shall be borne proportionately by Seattle, its other wholesale customers, and Cascade with respect only to the size of the

Cascade Block at the time curtailment is required. In that event, the Base and Supplemental Blocks will be reduced or restricted in the same proportion, as appropriate.

ARTICLE VIII - COST RECOVERY

8.1 The provisions of this Article shall apply to the establishment of fees and charges for water supply and related services. The parties understand and agree that the cost allocation and recovery provisions were specifically negotiated and based on specific consideration of the circumstances of this extended and restructured declining block contract, including but not limited to the limitations and restrictions applied in this Agreement, recognition of protection against stranded costs in the Seattle Water System, and recognition of the anticipated savings from Cascade's deferred capital project expenditures.

8.2 For the purposes of allocating costs of water supply, there shall be two water supply cost pools consisting of an existing Seattle water supply assets cost pool ("Existing Supply Cost Pool") and a new Seattle water supply assets cost pool (the "New Supply Cost Pool").

A. Existing Supply Cost Pool. The costs of infrastructure, including operation, maintenance, repair and replacement of Existing Supply System Facilities listed in Exhibit IV shall be included in the Existing Supply Cost Pool. The Parties may amend Exhibit IV by Management Agreement.

B. New Supply Cost Pool. The costs of water supply resources developed in the future ("New Supply Resources") that expand the capacity of the Seattle Supply System, including the costs of the Regional Conservation Program shall be included in the New Supply Cost Pool. If any portion of a New Supply Resource project enhances reliability of Existing Supply System Resources, the costs thereof may be allocated to the Existing Supply Cost Pool by Management Agreement.

8.3 For purposes of determining the cost of the transmission of water to the Wholesale Customers there shall be three transmission cost pools consisting of an existing transmission cost pool ("Existing Transmission Cost Pool"), a new transmission cost pool ("New Transmission Cost Pool"), and a Cascade transmission cost pool ("Cascade Sub-regional System Cost Pool").

A. Existing Transmission Cost Pool. Costs to be allocated to the Existing Transmission Cost Pool shall consist of the following: operation, maintenance, repairs and replacements to the Existing Transmission System Facilities listed in Exhibit V and may include costs related to Cascade Points of Delivery in accordance with this Agreement or as mutually agreed by Management Agreement to address third party claims arising from a Cascade Point of Delivery. Costs incurred for purposes of transmission reliability may be included in the Existing Transmission Cost Pool by

Management Agreement. The Parties may amend Exhibit V by Management Agreement.

B. New Transmission Cost Pool. The cost of new transmission facilities shall be included in the New Transmission Cost Pool. A portion of the renewal, replacement or modification of Existing Transmission System Facilities which create an expansion of transmission capacity may be allocated to the New Transmission Cost Pool.

C. Cascade Sub-regional System Cost Pool. The costs of operating, maintaining, repairing and replacing the Cascade Sub-Regional System facilities owned by Seattle and listed in Exhibit VII shall be included in the Cascade Sub-regional System Cost Pool, in an amount proportionate to the use of the facilities by Cascade, together with any other costs Cascade and Seattle agree to include by Management Agreement. In the event that Cascade ceases to receive water through one or more of the facilities in the Cascade Sub-regional System, these facilities may be decommissioned at Seattle's sole discretion, and Cascade shall pay Seattle for the remaining Net Book Value of the decommissioned facilities in an amount proportionate to the use of the facilities by Cascade together with any decommissioning costs.

8.4 A. If Seattle determines that changing the location of a Cascade Point of Delivery is required for the improved operation of the Seattle Transmission System then such costs shall be included in the Existing Transmission Cost Pool. Seattle shall notify Cascade of any proposed changes to a Cascade Point of Delivery and consult with Cascade to ensure minimal impact on the affected Cascade Member's distribution system and appropriate coordination of operation and construction activities.

B. The costs of operating, maintaining, repairing, replacing, relocating, adding or improving Cascade Points of Delivery for any reason other than Section 8.4.A shall be borne by Cascade, except to the extent that such costs are due to the negligence of Seattle. Costs will be invoiced and due in 30 days upon receipt or as otherwise provided for by Management Agreement as provided in Article X. Seattle shall notify Cascade of any proposed improvements to a Cascade Point of Delivery and consult with Cascade to ensure minimal impact on the affected Cascade Member's distribution system and appropriate coordination of operation and construction activities. Allocation of costs related to third party claims arising from Cascade Points of Delivery may be handled pursuant to a Management Agreement.

8.5 Seattle shall maintain a cost accounting system consistent with the provisions of this Agreement and generally accepted accounting principles consistently applied in developing the financial information for determining the costs of construction, replacement, maintenance and operation of the facilities in each cost pool.

A. Asset Accounts. An asset account shall be maintained for each facility and within that account Seattle shall record the original cost of that facility plus betterments and less retirements.

B. Depreciation. Facilities shall be depreciated according to Standard Water System Asset Lives and a record of life-to-date depreciation shall be maintained for each facility. No depreciation shall be recorded in the first calendar year of operation of a facility. A full year's depreciation shall be recorded in every subsequent year.

C. Net Book Value. The net book value of any facility shall be its original cost plus betterments and less retirements as recorded in its facility asset account, less life-to-date depreciation.

8.6 Costs in each cost pool shall be calculated as follows:

A. Infrastructure Costs. Each cost pool shall include the infrastructure costs for its respective facilities, calculated on a utility, cash or other basis depending upon the facility and the cost pool as set forth below.

1. Utility Basis. The utility basis shall be used to calculate the infrastructure costs for all Existing Supply System Facilities, all Existing Transmission System Facilities, and all Cascade Sub-Regional System facilities, as well as their replacements and betterments. Under the utility basis, the infrastructure cost for a facility in any year shall be the sum of (i) the annual depreciation expense recorded for that facility and (ii) the product of the net book value of that facility and the Rate Of Return On Investment. At Seattle's discretion, interest costs may be considered current infrastructure costs during the construction of a facility. However, any such interest costs must then be considered contributions in aid of construction, and not included in the Net Book Value of the facility for purposes of calculating Utility Basis costs in future years.

B. Operations Costs. The costs of operating the assets assigned to a cost pool shall be included in the cost pool. The annual operations costs of a cost pool shall be the labor, materials, equipment and other direct costs required for the operation and maintenance of the facilities in that cost pool, together with any net profit or expense from the disposition of facilities in that pool. Operations costs shall include the cost of general and administrative overhead applied in a manner consistent with its application to facilities construction projects.

1. Existing Supply Operations Costs. The Parties agree that an efficient way of handling operations costs for the Existing Supply Cost Pool shall be as follows: The Operations Cost base in the Existing Supply Cost Pool for the year 2001 shall be $17,780,262.00. In each succeeding year, the amount from the previous year shall

be adjusted by the percentage change in the total cost of all the supply cost centers identified in Exhibit VI, as it may be updated from time to time by Management Agreement, except that the increase in treatment operations costs caused by the first full year start-up of the Cedar Treatment Plant at Lake Youngs in or around 2005 shall not be included in the percentage adjustment. Any increase in Cedar Treatment operations costs for the first full year of operation of the plant shall instead be added directly to the Operations Cost total from the prior year as adjusted by the index. For each year after the first full year of operation, increases in Cedar Treatment operations costs shall be included in the adjustment index.

2. Existing Transmission Operations Costs. The Parties agree that an efficient way of handling operations costs for the Existing Transmission Cost Pool shall be as follows: the Operations Costs base in the Existing Transmission Cost Pool for the year 2001 shall be $4,531,931.00. In each succeeding year, the amount of these costs from the previous year shall be adjusted by the percentage change in the total cost of all the transmission cost centers identified in Exhibit VI, as it may be updated from time to time by Management Agreement.

3. Cascade Sub-regional System Cost Pool Operating Costs. Cascade Sub-regional System Cost Pool Operating Costs shall include: (i) the actual costs of operating the facilities listed in Exhibit VII in proportion to the actual use of such facilities by Cascade; (ii) the electricity costs paid by Seattle after the effective date of this Agreement, in accordance with certain contracts effective on or before January 1, 2002 identified in Exhibit I, for pump stations owned and operated by Cascade Members and connected to the Tolt East Side Supply Line; and, (iii) any other costs approved by Management Agreement shall be Cascade Sub-regional System Cost Pool Operating Costs.

C. Disposition Costs. The costs of disposing of assets within a cost pool shall be included in the cost pool. Net disposition costs shall be calculated as follows:

1. Disposition under the Utility Basis. The net book value of the facility, less any sales, salvage, or other revenues derived from the disposition of that facility.

8.7 For the Base Block, the costs in cost pools shall be allocated to Cascade as follows:

A. Allocation of Existing Supply Cost Pool. Cascade shall pay one hundred two percent (102%) of the product of the Base Block and the costs in the Existing Supply Cost Pool divided by the Firm Yield. In the event the 171 MGD Firm Yield is modified downward in accordance with Section 3.2 , this allocation formula will use the Base Block, whether reduced or not, and the modified Firm Yield. In the event the 171 MGD Firm Yield is modified upward (with no change in the Base Block), this allocation formula will continue to use the existing 171 MGD Firm Yield. The Parties understand and agree the intent of this provision is that Cascade will pay a consistent percentage of system costs regardless of modifications of Firm Yield unless the parties

subsequently mutually agree to an alternative reduction to the Cascade Block pursuant to Section 3.2.

B. Allocation of New Supply Cost Pool. Cascade shall pay none of the costs in the New Supply Cost Pool.

C. Allocation of Existing Transmission Cost Pool. Cascade shall pay one hundred two percent (102%) of the product of the Base Block and the costs in the Existing Transmission Cost Pool divided by the Firm Yield. In the event the 171 MGD Firm Yield is modified downward in accordance with Section 3.2, this allocation formula will use the Base Block, whether reduced or not, and the modified Firm Yield. In the event the 171 MGD Firm Yield is modified upward (with no change in the Base Block), this allocation formula will continue to use the existing 171 MGD Firm Yield. The Parties understand and agree the intent of this provision is that Cascade will pay a consistent percentage of system costs regardless of modifications of Firm Yield unless the parties subsequently mutually agree to an alternative reduction to the Cascade Block pursuant to Section 3.2.

D. Allocation of New Transmission Cost Pool. Cascade shall pay none of the costs in the New Transmission Cost Pool.

E. Allocation of the Cascade Sub-regional System Cost Pool. Cascade shall pay costs in the Cascade Sub-regional System Cost Pool as follows:

1. 100% of the costs associated with all facilities listed in Exhibit VII.A.
2. A proportionate share of those facilities listed in Exhibit VII.B. based on flows of Cascade Members. Costs will be allocated based on Peak 7 Day flows through each segment. In the event that Peak 7 Day flow data is not available, Peak Month flows may be substituted.

8.8 For the Supplemental Block, Cascade shall pay the then current Full or Partial Requirements Customer Commodity Charge. The Full or Partial Requirements Customer Commodity Charge shall be applied to the annual volume of the Supplemental Block allocated by month in accordance with the schedule in Section 8.10 C. Seattle will provide Cascade 30 days' advance notice of any proposed changes to the Full or Partial Requirements Customer Commodity Charges. For months that include a rate change, the charge shall be prorated in accordance with the effective date of the rate change.

8.9 Cascade shall pay the costs of penalties for exceeding the Cascade Block, as defined in Section 8.11 and any other costs requiring invoice by Seattle within 30 days of invoice by Seattle. Overdue balances shall bear interest at the rate of 1% per month.

8.10 Cascade shall pay the annual costs allocated to Cascade in accordance with Section 8.7 for the Base Block and 8.8 for the Supplemental Block as follows:

A. Prospective Cost Estimate for the Base Block. Seattle may conduct a cost estimating study to revise estimates of the annual costs allocable to Cascade for the Base Block

upon 120 days notice to Cascade. Cascade shall pay Seattle for the Base Block according to the estimated annual costs in such study, provided that not more than five years has elapsed from the time a study is conducted to the year in which the estimates from that study are used. Each study shall estimate the annual costs for the Base Block not less than the five following years.

B. Statement of Annual Costs. On or before October 1st of each year, Seattle shall provide Cascade with its best, non-binding estimate of the annual costs for the Base and Supplemental Blocks for the next year. On or before December 1st of each year, Seattle shall notify Cascade of Cascade's annual costs for the Base and Supplemental Blocks for the next year. For the Base Block, such annual cost shall be the sum of the prospective cost estimate determined in accordance with Section 8.10 A and the amount of excess or deficit identified in the most recent cost audit performed in accordance with Section 8.10 D. For the Supplemental Block, such annual cost shall be in accordance with Section 8.8. In the event the Full or Partial Requirements Customer Commodity Charges change during the year, Seattle will provide Cascade with an updated cost estimate for the Supplemental Block for the remainder of that year.

C. Payment Distribution. On or before the last day of each month, Cascade shall pay Seattle that portion of Cascade's annual cost for that year, calculated pursuant to Section 8.10 B for the Base Block and Section 8.8 for the Supplemental Block, according to the following schedule:

January 5%
February 5%
March 6%
April 6%
May 6%
June 12%
July 13%
August 15%
September 13%
October 7%
November 6%
December 6%

Overdue balances shall bear interest at the rate of 1% per month. In no event shall Cascade be required to pay Seattle a monthly payment during a year until at least 30 days after Seattle provides Cascade with a statement of annual costs for that year, and such payments shall not be considered overdue, until 30 days after such statement is provided to Cascade.

D. Cost Audit for the Base Block. No later than August 1 of each year, Seattle shall provide a statement of actual costs for the Base Block allocated to each cost pool and other costs and revenues received during the prior year, which statement shall be examined by an external auditor in an "agreed-procedures" engagement. In addition, Cascade may have the statement audited by an external auditor of its choice, solely at Cascade's expense. This statement shall clearly identify the amount by which payments for the Base Block made by Cascade during the prior year were in excess of, or insufficient to meet the actual costs allocable to Cascade for the Base Block for the prior year. This surplus or deficit shall earn interest at the Rate of Return on Investment, and shall be reduced in accordance with Section 8.10 B. No later than December 31 of the year following the termination of the contract, any remaining surplus or deficit balance shall be paid in cash by the Party owing the balance to the party to whom the balance is owed.

E. Payment from Gross Revenues. Cascade shall pay the Base Block and Supplemental Block charges out of its gross revenues. Except for the Transition Payments in Section 8.10 G below, Cascade's payments to Seattle pursuant to this Agreement and payments otherwise required or provided for by this Agreement shall be maintenance and operation expenses of Cascade, payable prior to and superior to any charge or lien of any revenue bond issued by Cascade that are payable from the revenues of Cascade. Cascade shall establish rates and collect fees and charges for wholesale water service sufficient to pay for the maintenance and operation of its Cascade Water System, including payments to Seattle, and the principal and interest on any and all Cascade revenue obligations that constitute a charge against the revenue of Cascade.

F. Emergency Surcharge. In the event of a catastrophe or other extraordinary condition that requires emergency expenditures to maintain a sufficient water supply, Seattle may impose an emergency surcharge proportionately on all of its retail and wholesale customers, including Cascade in order to pay for such expenditures. Any such emergency surcharge shall be presented to Cascade prior to adoption by Seattle. Seattle shall consider Cascade's comments but shall nevertheless have the full authority to adopt the charge.

G. Transition Payments. In consideration for entering into this 2nd Amended and Restated Declining Block Water Supply Agreement, Cascade will pay to Seattle, three transition payments of the following amounts and on the following schedule:

1. Payment of $5 million due on or before July 31, 2013
2. Payment of $12 million due on or before December 31, 2018
3. Payment of $5 million due on or before December 31, 2024

Seattle will consider these transition payments as revenue to offset costs in the Existing Supply Cost Pool allocated to the Full and Partial Requirements customer class under the provisions of those contracts.

8.11 A. Charges will be imposed for exceeding the Cascade Block for Annual Average Daily Demand, Peak Month Factor and Peak Season Factor limitations, based on daily averages measured according to Sections 3.9-3.11. These charges will be determined by multiplying the appropriate multiplier(s) from the following tables times the then current Full or Partial Requirements Customer Commodity Charge(s) for the period(s) in which the exceedance occurred, the result multiplied by the full amount of the exceedance over the applicable limit (in MGD) and then multiplied by the actual number of days in the calendar year, 30 days for Peak Month or 122 days for Peak Season, whichever is applicable.

For the first instance in any five-year period, the following multipliers will apply:

	Multipliers for Charges for Water in Excess of Annual Average Daily Demand, Peak Season and Peak Month Block Limitations - First Instance in 5-Year Period			
Category	**0 to 1 MGD**	**>1 to 2 MGD**	**>2 to 3 MGD**	**>3 MGD**
ADD	1.0	1.0	1.1	1.2
Month	1.0	1.0	9.1	16.7
Season	1.0	1.0	3.1	4.7

The multipliers for the first 2 MGD in the table above reflect a buffer before penalty charges begin. Cascade agrees not to plan or rely on this buffer as available firm supply.

B. For any additional instances of water in excess of the average annual and peak supply limitations in any five-year period, the following multipliers will apply.

	Multipliers for Charges for Water in Excess of Annual Average Daily Demand, Peak Season and Peak Month Block Limitations - Additional Instances in 5-Year Period			
Category	**0 to 1 MGD**	**>1 to 2 MGD**	**>2 to 3 MGD**	**>3 MGD**
ADD	1.0	1.1	1.1	1.2
Month	1.5	9.1	9.1	16.7
Season	1.5	3.1	3.1	4.7

C. In the event of a charge for exceeding the block occurs in more than one category in either a single year or in multiple years during any consecutive five-year period, only the category that results in the highest charge will be assessed.

8.12 Except in the case of an emergency, the provisions of Section 8.11 shall be applied reciprocally to Seattle to calculate credits to Cascade, should Seattle fail to deliver the Cascade Block as required by this Agreement.

ARTICLE IX - ADMINISTRATION

9.1 Seattle shall own and maintain appropriate metering devices to measure the water flowing from the Seattle Water System to each Point of Delivery. At Cascade's request and sole expense, Seattle will install and maintain equipment selected by Cascade and approved by Seattle to transmit signals to recording equipment of Cascade or its Members (located elsewhere) of the amount of water delivered, as measured by Seattle's meters.

9.2 Seattle shall keep full and complete books of accounts for the Seattle Water System and Seattle's retail distribution system in compliance with current standards required by the State Auditor. Cascade, at its own expense, may at any time audit Seattle's book of accounts using the services of a public accounting firm and Seattle shall make the books and records of the Seattle Water System and Seattle's retail distribution system available to such auditors during reasonable business hours upon reasonable notice at the place where such records are normally kept. Seattle shall provide adequate facilities; i.e., room and workspace, so the audit can be performed. Seattle shall have reciprocal rights to audit Cascade books and accounts.

9.3 This Agreement shall be interpreted according to the laws of the State of Washington and the venue for any litigation between the Parties concerning its terms shall be in the Superior Court of King County at Seattle. The Parties shall be entitled to specific performance of the terms of this Agreement.

9.4 This Agreement shall inure to the benefit of and be binding upon successors of interest and assigns of the Parties. Neither this Agreement nor obligations to perform hereunder may be voluntarily assigned by either Party without the other Party's written consent, which shall not be unreasonably withheld; provided however, that a change in Cascade's corporate form to another form of organization authorized by Washington law, shall not be considered an assignment. Seattle may not convey the Seattle Water System in its entirety or any of its component parts used to meet the obligations of this Agreement without providing for an assumption of this Agreement and the obligations contained herein by the conveyee. The Parties do not intend to confer rights or benefits upon any third party. Only a writing executed by the Parties may modify this Agreement.

9.5 All notices relating to this Agreement shall be sent to the following addresses, certified mail, return receipt requested, unless the other Party is previously notified in writing of a change in recipient or address:

To Seattle:	To Cascade:
Director	Chief Executive Officer
Seattle Public Utilities	Cascade Water Alliance

700 Fifth Avenue, 49th Fl.
Seattle, WA 98104

520 112th Avenue NE, Suite 400
Bellevue, WA 98004

9.6 If any provision of this Agreement or its application is determined by a court of law to be illegal, invalid, or void without rendering performance of this Agreement impossible or infeasible, then the Parties intend that the validity of the remaining provisions of this Agreement or their application shall not be affected and shall continue in full force and effect.

9.7 This Agreement is a contract for the purchase and sale of water and transmission services related to that water and no provision hereof shall be construed to make the Parties partners or joint ventures. Neither Party is the agent of the other nor shall either Party be held liable for the acts of the other on a theory of agency or any other representative capacity.

9.8 In the event of default of any provision of this Agreement, the non-defaulting Party shall issue written notice to the other Party setting forth the nature of the default. If the default is for a monetary payment due hereunder, the defaulting Party shall have thirty (30) days to cure the default. In the event of other defaults, the defaulting Party shall use its best efforts to cure the default within ninety (90) days. If such default cannot be reasonably cured within such ninety (90) day period, the defaulting party shall, upon written request prior to the expiration of the ninety (90) day period be granted an additional sixty (60) days to cure the default.

9.9 In the event of a default in payment by Cascade, Seattle shall have the right to compensation from the constituent Cascade Members up to the proportionate share of each Member's use of the Cascade Block which shall be established by the most recent annual report of Cascade Member's proportionate use of the Cascade Block, which proportionate use shall total 100 percent of the Cascade Block. Cascade's annual proportionate use report shall be completed and delivered to Seattle no later than March 31 of each year. Each Cascade Member must acknowledge and accept this individual, contingent liability to Seattle in writing at the time that Cascade enters into this Agreement. Cascade shall require those agencies that later join Cascade as a Cascade Member to convey such written acknowledgment and acceptance to Seattle within one month of joining Cascade. Without waiving any other remedies available under this Agreement or applicable law, should any Cascade Member required to do so fail to convey such written acknowledgement and acceptance, Seattle shall have the unilateral right, upon written notice to Cascade, to reduce the Cascade Block by the amount allocated to such Cascade Member as set by Cascade's most recent annual proportionate use report, until such written acknowledgement and acceptance is provided to Seattle.

ARTICLE X - TECHNICAL COMMITTEE

Technical Committees comprising of Seattle staff and other affected parties will address day to day operational issues related to the Seattle Water System. Finance cost and rate issues will be

addressed independently between the Director of Seattle Public Utilities and the CEO of Cascade Water Alliance, or their respective designees as provided for in written notice to the other. It is recognized that daily operation of the Seattle Water System and implementation of this Agreement may require direct communication and coordination between Seattle staff and the staff of Cascade or Cascade Members and accommodation of Cascade's insurers with respect to claims. The Parties may establish any desired communication or coordination and claim protocols by Management Agreement.

ARTICLE XI - DISPUTE RESOLUTION

11.1 Cascade and Seattle shall make good faith efforts to resolve by informal discussion any dispute arising under or in connection with this Agreement. If at any time a Party to a dispute determines that such informal discussions will not result in a resolution, such Party may initiate non-binding mediation of any dispute arising under or in connection with this Agreement. Within ten (10) days of receiving written notice of initiation of non-binding mediation by one or both Parties, each Party shall designate in writing not more than five (5) candidates it proposes to act as a non-binding mediator. The Parties shall within an additional five (5) days select one of the mediators from either list to serve as mediator. Should the Parties be unable to agree upon a mediator, a mediator shall be chosen from one of the two lists by the presiding judge of the King County Superior Court at Seattle. Upon selection of the mediator, the Parties shall use reasonable efforts to resolve the dispute within thirty (30) days with the assistance of the mediator. The cost of mediation shall be shared by Cascade and Seattle equally.

11.2 If mediation fails to resolve the dispute within thirty (30) days of selection of the mediator, the Parties may thereafter seek redress in court.

11.3 Pending the decision in any mediation or litigation process pursuant to this section, the Parties to such process shall continue to fulfill their respective duties under this Agreement.

ARTICLE XII - UNFORESEEN AND UNAVOIDABLE EVENTS

12.1 The Parties recognize that unforeseen and unavoidable events may occur which would require Seattle to act unilaterally for what it deems to be in the best interest of the general public served by the Seattle Water System; including water shortages resulting from drought circumstances and temporary reduction in water supply associated with turbidity events. Upon the occurrence of an unforeseen or unavoidable event, Seattle shall, to the extent practicable, treat its wholesale and retail customers equally and any curtailment of supply shall be imposed proportionately among those customers. This authority to act unilaterally carries with it a unilateral responsibility of Seattle to restore, expeditiously, the Seattle Water System to its pre-emergency capability to supply the region.

12.2 Upon occurrence of an unforeseen or unavoidable event that adversely impacts the Cascade Water System, Cascade may request Seattle to temporarily modify or suspend operational or supply provisions of this Agreement and Seattle shall make reasonable efforts to grant such request. Cascade will act expeditiously to restore the Cascade Water System to its pre-emergency capability.

12.3 The time periods for Seattle's performance under any provisions of this Agreement shall be extended for a reasonable period of time during which Seattle's performance is prevented, in good faith, due to fire, flood, drought, turbidity events, earthquake, lockouts, strikes, embargoes, acts of God, war and civil disobedience. If this provision is invoked, Seattle agrees to immediately take all reasonable steps to alleviate, cure, minimize or avoid the cause preventing such performance.

ARTICLE XIII - EXHIBITS

Exhibits I through VII are attached hereto and are hereby incorporated by reference into the Agreement as if set forth in full herein.

ARTICLE XIV - COMPLETE AGREEMENT

This Agreement, as amended and restated herein, represents the entire agreement between the Parties concerning the subject matter hereof and will supercede Amended and Restated 50-Year Declining Block Water Supply Agreement between the City of Seattle and the Cascade Water Alliance, dated December 17, 2008 upon the effective date noted herein. This Agreement may not be amended except as provided in Section 9.4.

THE CITY OF SEATTLE, a municipal corporation:

By: _____ DATE: 7/15/13
DIRECTOR, SEATTLE PUBLIC UTILITIES

THE CASCADE WATER ALLIANCE, a joint municipal utility services authority:

BY: _____ DATE: 7/12/13
CHIEF EXECUTIVE OFFICER

EXHIBIT I

Other Agreements

A. List of documents, commitments, adjustments, reductions, agreements, and/or written approvals by Seattle regarding the supply, purchase and/or resale of water according to Section 4.4 of this Agreement:

1. Interties and associated agreements with other agencies as referenced in Section 4.4:

   a) Redmond/Union Hill Water Association Water Service Agreement
   b) Redmond/Union Hill Water Association Agreement for Water System Interties
   c) Redmond/Woodinville Water District Interlocal Agreement
   d) Redmond/Woodinville Water District Agreement for Water System Interties
   e) Redmond/Northeast Sammamish Water & Sewer District Agreement for Water System Interties
   f) Skyway / WD 125
   g) Bellevue/Coal Creek

2. Other pertinent Agreements:

   a. List of electric contracts for pump stations owned and operated by Cascade Members and connected to the Tolt Eastside Supply Line according to Section 8.6.B.3 of this Agreement:

      1. Between the City of Bellevue and the City of Seattle, effective August 1983, pursuant to Ordinance #111276 for SE 28th pumping station (50% / 50%) and N.E. 8th pumping station (Bellevue 60% / Seattle 40%)

CASCADE POINTS OF DELIVERY, MINIMUM HYDRAULIC GRADIENTS, AND MAXIMUM FLOW RATES OF WATER SUPPLIED

METER SERVICE				MINIMUM HYDRAULIC GRADIENT AT STATION UPSTREAM OF METER (FEET NAVD-88 Datum)	FLOW UP TO WHICH THE MINIMUM HYDRAULIC GRADIENT IS GUARANTEED (gpm)
LOCATION	STATION NUMBER (1)	PIPELINE SEGMENT NUMBER(1)	SIZE OF METER (IN.)		
Bellevue (* Redmond)					
132nd Ave. SE & SE 26th Street	59	8	8	425	1,300
128th Ave. SE & Newport Way	56	8	8	435	850
Mercer Is. Pipeline & 108th Ave. SE	66	9	8	420	700
140th Ave. NE & 40th Street	65	2	10	500	3,500
132nd Ave. NE & NE 14th St.	62	2	12	470	4,500
132nd Ave. NE & NE 24th Street	63	2	10	455	4,500
152nd Ave. NE & NE 8th Street	61	2	24	460	3,500
145th Pl. SE & SE 28th Street	58	3	12	470	3,000
14509 SE Newport Way (2)	60	3	10	525	4,600
14509 SE Newport Way (6) (7)	TBD	3	10	525	2,900
128th Ave SE & SE 56th ST (3)	47	8	8	440	Backup to Sta. 55 (5)
128th Ave SE & Newport Way (3)	55	8	6	435	800
120th Ave SE & SE 35th ST (3)	46	9	6	425	Backup to Sta. 124 (5)
I-90 & Lake Washington Boulevard (3)	50	9	6	425	Fire flow backup only

124th Ave SE & SE 38 PL [3]	124	9	8	425	1,500
128th Ave SE & SE 70th ST [4]	52	8	12	445	1,020

METER SERVICE				MINIMUM HYDRAULIC GRADIENT AT STATION UPSTREAM OF METER (FEET NAVD-88 Datum)	FLOW UP TO WHICH THE MINIMUM HYDRAULIC GRADIENT IS GUARANTEED (gpm)
LOCATION	STATION NUMBER [1]	PIPELINE SEGMENT NUMBER[1]	SIZE OF METER (IN.)		
Kirkland / Redmond 132nd Ave. NE & NE 113th Street	74	1	10	555	4,500
132nd Ave. NE & NE 85th Street	75	1	16	535	4,080
140th Ave. NE & NE 70th Street	72	2	12	520	1,240
Redmond 160th Ave NE & NE 104th Street	165	28	10	515	1,000 (combined with following planned new location)
NE 172nd Street & Tolt Pipeline No. 2	TBD	28	TBD	515	planned new location
Trilogy Parkway NE & NE 125 Street	164	26	10	610	2,000 (combined with following planned additional meter)
Trilogy Parkway NE & NE 125 Street	TBD	26	10	610	Planned additional meter
Skyway 84th Ave. S & S 134th Street	1	10	6	455	210
Beacon Ave S & S 124th Street	5	10	8	455	720
Cornell Ave S & S 112th Street	172	4	6	375	Backup service
Tukwila 39th Ave S & S 112 Street	11	15	10	460	Backup service

South Center Parkway & Tukwila Parkway	13	13	10	460	2,200
West Valley Hwy & S 162nd Street	14	13	8	460	Backup emergency service
Christensen Rd. & Baker Rd	15	13	8	460	480

METER SERVICE				MINIMUM HYDRAULIC GRADIENT AT STATION UPSTREAM OF METER (FEET NAVD-88 Datum)	FLOW UP TO WHICH THE MINIMUM HYDRAULIC GRADIENT IS GUARANTEED (gpm)
LOCATION	**STATION NUMBER (1)**	**PIPELINE SEGMENT NUMBER(1)**	**SIZE OF METER (IN.)**		
53rd Ave S & S 160th Street	16	13	6	460	20
E Marginal Way & S 112th Street	168	15	12	445	810
51st Ave S & S Leo Street	169	12	8	455	60
W. Marginal Place & s 102nd St.	170	5	12	300	80
47th Ave S & S Victor Street	173	12	6	425	Backup service
				TOTAL:	**50,070**

Notes:

(1) Station and Pipeline Segment Numbers pertain to the Demand Metering program.

(2) Assumes existing 16-inch sonic meter is replaced with a 10-inch Protectus meter as planned.

(3) These stations to be fully transferred from Coal Creek Utility District to Bellevue.

(4) This station supplies to Coal Creek Utility District directly. Assumes Coal Creek sub-meters 40 percent of total flow (average, peak) through this station to Bellevue.

(5) Maximum combined flow of primary and backup stations shall not exceed the flow for the primary station as shown on this Exhibit.

(6) Assumes a new 10-inch Protectus meter is installed as planned.

(7) If another supply source of equal or higher capacity is provided into the Issaquah - Sammamish Plateau area by any party other than Seattle to serve Cascade members, Seattle's supply obligation at this station will terminate. Seattle's delivery obligation at this station is not transferable to any other station.

EXHIBIT III

Block Allocations of Water by Individual SPU Wholesale Water Customers

Water Utility	Annual Block (110%)	Peak Season Factor	Peak Season Block	Peak Month Factor	Peak Month Block
Bothell	1.77	1.35	2.39	1.69	2.99
Cedar River	3.05	1.35	4.11	1.69	5.15
Coal Creek	1.02	1.35	1.38	1.69	1.73
Duvall	0.73	1.35	0.98	1.69	1.23
Edmonds	0.00	1.35	0.00	1.69	0.00
Highline	6.02	1.35	8.12	1.69	10.17
Mercer Island	2.24	1.35	3.03	1.69	3.79
Northshore	6.36	1.35	8.58	1.69	10.75
Olympic View	0.56	1.35	0.76	1.69	0.95
Shoreline WD	1.96	1.35	2.64	1.69	3.31
Soos Creek	5.03	1.35	6.79	1.69	8.50
Woodinville	5.01	1.35	6.76	1.69	8.46
WD 20	2.60	1.35	3.50	1.69	4.39
WD 45	0.33	1.35	0.45	1.69	0.56
WD 49	1.39	1.35	1.87	1.69	2.34
WD 85	0.00	1.35	0.00	1.69	0.00
WD 90	0.91	1.35	1.23	1.69	1.54
WD 119	0.46	1.35	0.62	1.69	0.78
WD 125	2.15	1.35	2.90	1.69	3.63
Existing Purveyor Totals	**41.57**		**56.12**		**70.25**

EXHIBIT IV

Seattle Supply System Facilities

1. **Cedar Source**
   - All roads, buildings, structures, water supply facilities, recreational and educational facilities, and fisheries enhancement and mitigation facilities located within or close to the Cedar River Hydrographic Watershed boundary as defined by Seattle land ownership, including the land itself, and any capitalized studies related to the above. Excepted are facilities solely owned by Seattle City Light for the purpose of power generation. Facilities shared by Seattle City Light and Seattle Public Utilities shall be part of the Seattle Supply System only to the extent of SPU share or responsibility.
   - All facilities located within the Lake Youngs Reservation as defined by Seattle ownership of the land except for conveyance facilities used to transport finished water during non-emergency operation
   - All facilities located within the Lake Youngs Aqueduct, the Landsburg Tunnel, and the Lake Youngs Supply Lines right-of-way, including the right-of-way itself
   - Existing Morse Lake Floating Pump Stations

2. **Tolt Source**
   - All roads, buildings, structures, water supply facilities, recreational and educational facilities, and fisheries enhancement and mitigation facilities located within or close to the South Fork Tolt River Hydrographic Watershed boundary as defined by Seattle land ownership, including the land itself, and any capitalized studies related to the above. Excepted are facilities solely owned by Seattle City Light for the purpose of power generation. Facilities shared by Seattle City Light and Seattle Public Utilities shall be part of the Seattle Supply System only to the extent of SPU share or responsibility.
   - Tolt Treatment Facility

3. **Seattle Wellfields**
   - Riverton Wells, including all pumping and treatment equipment, original yard piping, to the connection to CRPL4, and the low flow piping to Riverton Reservoir
   - Boulevard Well, including all pumping and treatment equipment, and all piping up to the connection to CRPL4

4. **Other**
   - One Percent Conservation Program through December 31, 2003
   - Commercial Incentive Program through December 31, 2003
   - Commercial Toilet Retrofit Program through December 31, 2003
   - Showerhead retrofit Program through December 31, 2003
   - The Seattle Forecasting Model (SEAFM Model)
   - GIS Projects related to facilities identified herein as part of the Seattle Supply System

EXHIBIT V

Seattle Transmission System Facilities

1. Pipelines

- Tolt Pipeline No. 1 from the outlet of the Tolt Treatment Facility (TTF) to Lake Forest Reservoir, including any transfer and ancillary small diameter parallel pipes *(Note: Includes TPL1 and TPL2 between the Reg. Basin and TTF in Supply!)*
- Tolt Pipeline No. 2 (where constructed), including any transfer and ancillary small diameter parallel pipes
- Tolt Tieline
- Tolt Eastside Supply Line (from TESS Junction to the intersection of SE 16th ST and 145th Place SE)
- Tolt Eastside Line Extension (from the intersection of SE 16th ST and 145th Place SE to Eastside Reservoir)
- The 540 head Pipeline from Maple Leaf Reservoir to Lake Forest Reservoir
- Lake Youngs Bypass No. 4 from the outlet of each of the Cedar Treatment Facility clearwells to Control Works
- Lake Youngs Bypass No. 5 from the outlet of each of the Cedar Treatment Facility clearwells to the Lake Youngs Tunnel
- The Lake Youngs Tunnel (from the original lake outlet to Control Works)
- The Maple Leaf Pipeline (from the intersection of 18th Avenue E. and E. Prospect Street to Maple Leaf Reservoir)
- Cedar River Pipeline No. 1 from Control Works to the intersection of 18th Avenue E. and E. Prospect Street
- Cedar River Pipeline No. 2 from Control Works to the intersection of 12th Avenue E. and E. Olive Street
- Cedar River Pipeline No. 3 from Control Works to the intersection of 18th Avenue E. and E. Prospect Street
- 30" intertie between Cedar River Pipelines 2 and 3 in east Olive Street
- Cedar River Pipeline No. 4 from Control Works to the West Seattle Pipeline
- Cedar Eastside Supply Line (from the Cedar Wye to the intersection of SE 16th St and 145th Place SE)
- West Seattle Pipeline from Augusta Gatehouse to Cedar River Pipeline 4
- The 8th Avenue S. Pipeline between S. 146th Street and S. 160th Street
- The Bow Lake Pipeline (between 8th Avenue S. and CRPL 4, and as relocated outside runways at Seatac Airport)
- The Burien Feeder (in S. 146th Street between 8th Avenue S. and CRPL 4)
- The Fairwood Line (between Fairwood Pump Station and Soos Reservoirs)
- The 24-inch discharge pipeline of Lake Youngs Pump Station up to Soos Reservoirs
- The 12-inch discharge pipeline of Lake Youngs Pump Station up to Soos Reservoirs
- The 630 head pipeline between Lake Youngs Pump Station and the Cedar River WSD pump station at the eastern boundary of the Lake Youngs Reservation

2. Reservoirs, Tanks, and Standpipes, including overflow pipes, all valves, appurtenances, and disinfection facility located on the premises of each storage facility, unless otherwise noted

- Lake Forest Reservoir
- Eastside Reservoir
- Riverton Reservoir
- Maple Leaf Reservoir (excluding Roosevelt Way Pump Station and its suction and discharge piping, Maple Leaf Tank and 520 zone piping, except where solely serving the disinfection facility)
- Soos Reservoirs

3. Pump Stations, Major Valve Structures, and other Facilities

- TESS Junction Pump Station
- Lake Hills Pump Station
- Maplewood Pump Station
- Maple Leaf Pump Station
- Bothell Way Pump Station
- Fairwood Pump Station
- Lake Youngs Pump Station
- The Control Works
- Augusta Gatehouse
- Eastgate Pump Station

4. Certain costs related to Cascade Points of Delivery

Cascade Points of Delivery are generally not considered part of the Existing Transmission System Facilities, however, certain costs may be included in the Existing Transmission Cost Pool as follows:

- The costs of existing meters, vaults and related equipment at all Cascade Points of Delivery installed prior to 2004 to the extent those costs were unamortized as of December 31, 2003.
- Any costs related to Cascade Points of Delivery that are included in the Existing Transmission Cost Pool in accordance with the Agreement.

The facilities include the appurtenances to the transmission lines including but not limited to rights of way, line valves, system meters and remote automation devices.

EXHIBIT VI

Cost Centers Used for Operations Cost Indices

The following costs centers or successor cost centers that capture the direct costs of operation of Existing Supply Facilities, Existing Transmission Facilities and the Regional Conservation Program shall be used as the indices for operations cost in the Existing Supply Cost Pool, Existing Transmission Cost Pool and for the Regional Conservation Program in the New Supply Cost Pool.

Supply

Program	Project	Project Name	Activity
Communications	N1203	Communications Activity Group	N120304 Purveyor Relations
Audit & Accounting	N3303	Customer Audit	N330303 Purveyor Audit
Watershed Management	N5401	Program Management	N540194 Department Support
Watershed Management	N5401	Program Management	N540195 General Expense
Watershed Management	N5401	Program Management	N540196 General Management
Watershed Management	N5401	Program Management	N540197 Training
Watershed Management	N5401	Program Management	N540198 Safety
Watershed Management	N5401	Program Management	N540199 Personnel
Watershed Management	N5401	Program Management	N540289 Capital Purchase
Watershed Management	N5403	Support Services	N540301 Modified Duty
Watershed Management	N5403	Support Services	N540302 Procuring/Paying/Receiving
Watershed Management	N5403	Support Services	N540303 Vehicle Equipment Downtime
Watershed Management	N5404	Watershed Protection	N540401 Hydrological Data Collection
Watershed Management	N5404	Watershed Protection	N540402 Fire Protection
Watershed Management	N5404	Watershed Protection	N540403 Inspection
Watershed Management	N5404	Watershed Protection	N540404 Boundaries
Watershed Management	N5405	Facility Management	N540501 WS Grounds
Watershed Management	N5405	Facility Management	N540502 WS Buildings
Watershed Management	N5405	Facility Management	N540503 WS Facilities & Roads
Watershed Management	N5406	Watershed Road Maintenance	N540601 Grade/Gravel/Ditching
Watershed Management	N5406	Watershed Road Maintenance	N540602 Bridges/Streams Culvert
Watershed Management	N5406	Watershed Road Maintenance	N540603 Roads/Row/Vegetation Cutting
Watershed Management	N5406	Watershed Road Maintenance	N540604 Tolt Roads & Streams
Watershed Management	N5407	Watershed Operations Support	N540701 Veh/Equipment Management
Watershed Management	N5407	Watershed Operations Support	N540702 Veh/Equip/Tool Repair
Watershed Management	N5408	Water Quality & Hydrology	N540801 Water Quality Monitoring
Watershed Management	N5408	Water Quality & Hydrology	N540802 Hydrological Monitoring
Watershed Management	N5409	Public/Cultural Programs	N540901 Recreation Planning
Watershed Management	N5409	Public/Cultural Programs	N540902 Management & Research
Watershed Management	N5409	Public/Cultural Programs	N540903 Watershed Education
Watershed Management	N5409	Public/Cultural Programs	N540904 Watershed Public Information
Watershed Management	N5410	Wildlife & Fisheries Programs	N541001 Program Planning & Evaluation
Watershed Management	N5410	Wildlife & Fisheries Programs	N541002 Interagency/Public Involvement
Watershed Management	N5410	Wildlife & Fisheries Programs	N541003 Ecological Monitoring & Research
Watershed Management	N5410	Wildlife & Fisheries Programs	N541004 Habitat & Species Inventory
Watershed Management	N5410	Wildlife & Fisheries Programs	N541005 Habitat Enhancement/Restoration
Watershed Management	N5411	Resource Information Mgmt	N541101 Program Plan/Evaluation
Watershed Management	N5411	Resource Information Mgmt	N541102 Information Maintenance

Watershed Management	N5411	Resource Information Mgmt	N541103 Information Services
Watershed Management	N5412	Special Projects	N541202 Silviculture
Watershed Management	N5412	Special Projects	N541205 Land Exchanges/Acquisitions
Program	**Project**	**Project Name**	**Activity**
Watershed Management	N5415	Cedar HCP	N541501 ASSESS OF EXPAND FOREST STAND
Watershed Management	N5415	Cedar HCP	N541502 ASSESS EXPAND FOREST ATTRIBUTE
Watershed Management	N5415	Cedar HCP	N541503 AUGMENT FOREST HABITAT INV
Watershed Management	N5415	Cedar HCP	N541504 LONG-TERM FOREST HABITAT
Watershed Management	N5415	Cedar HCP	N541505 OLD-GROWTH CLASSIFICATION
Watershed Management	N5415	Cedar HCP	N541506 RIPARIAN RESTOR PROJECT MONIT
Watershed Management	N5415	Cedar HCP	N541507 UP0LAND FOREST RESTOR PROJ MONT
Watershed Management	N5415	Cedar HCP	N541515 GIS DATA COMPATIBILITY STUDY
Watershed Management	N5415	Cedar HCP	N541516 FOREST HABITAT MODELING
Watershed Management	N5415	Cedar HCP	N541517 SPECIE HABITAT RELATION MODEL
Watershed Management	N5416	Cedar HCP	N541601 CRHCP GIS SUPPORT
Watershed Management	N5416	Cedar HCP	N541603 CRHCP TECHNICAL SUPPORT
Watershed Management	N5417	Cedar HCP	N541701 ROAD MAINTENANCE
Watershed Management	N5418	Cedar HCP	N541801 EXPERIMENTAL STREAM MONITORING
Watershed Management	N5418	Cedar HCP	N541802 LONG-TERM STREAM MONITORING
Watershed Management	N5418	Cedar HCP	N541803 AQUATIC RESTORATION MONITORING
Watershed Management	N5418	Cedar HCP	N541804 BULL TROUT SURVEYS (ADULT)
Watershed Management	N5418	Cedar HCP	N541805 BULL TROUT SPAWNING SURVEY
Watershed Management	N5418	Cedar HCP	N541806 BULL TROUT FRY/JUVENILE SURVEY
Watershed Management	N5418	Cedar HCP	Riparian Zone Studies
Watershed Management	N5418	Cedar HCP	N541809 BULL TROUT STREAM DISTRIBUTION
Watershed Management	N5418	Cedar HCP	N541810 BULL TROUT REDD INUNDATION STU
Watershed Management	N5418	Cedar HCP	N541811 COMMON LOON MONITORING
Water Quality & Supply	N5503	Water System Operations	N550301 Water Management
Water Quality & Supply	N5503	Water System Operations	N550302 Water System Control
Water Quality & Supply	N5503	Water System Operations	N550303 Anadromous Fishery Mgmt
Water Quality & Supply	N5503	Water System Operations	N550304 SCADA Management
Water Quality & Supply	N5503	Water System Operations	N550305 Highline Well Field
Water Quality & Supply	N5503	Water System Operations	N550306 Morse Lake PS
Water Quality & Supply	N5503	Water System Operations	N550307-SAFETY PROCESS MGMT COMPLIANCE
Water Quality & Supply	N5503	Water System Operations	N550308-EPA RISK MGMT COMPLIANCE
Water Quality & Supply	N5504	Water System Analysis	N550401 Eng Analysis/Modeling
Water Quality & Supply	N5504	Water System Analysis	N550402 Water Rights Mgmt

Water Quality & Supply	N5504	Water System Analysis	N550403 DEMAND METERING
Water Quality & Supply	N5505	Surface Water Trtmnt Rule	N550501 Monitoring, Reporting & Admin
Water Quality & Supply	N5505	Surface Water Trtmnt Rule	N550502 Cholrination Facilities O&M
Water Quality & Supply	N5505	Surface Water Trtmnt Rule	N550503 Watershed Management
Water Quality & Supply	N5506	Total Coliform Rule Compl.	N550601 Monitoring, Reporting & Admin
Program	**Project**	**Project Name**	**Activity**
Water Quality & Supply	N5508	Lead & Copper Rule Compl.	N550801 Monitoring, Reporting & Admin
Water Quality & Supply	N5508	Lead & Copper Rule Compl.	N550802 Corrosion Trtmnt Facil O&M
Water Quality & Supply	N5509	Fluoridation Program	N550901 Fluoridation Program O&M
Water Quality & Supply	N5510	Other Reg Comp/Monitoring	N551001 Otr Reg/Operational Analysis
Water Quality & Supply	N5510	Other Reg Comp/Monitoring	N551002 Disinfection By-Product Rule
Water Quality & Supply	N5510	Other Reg Comp/Monitoring	N551003 Limnology
Water Quality & Supply	N5510	Other Reg Comp/Monitoring	N551005 WQ Lab
Water Quality & Supply	N5510	Other Reg Comp/Monitoring	N551006 DW Reg Dev & App Research
Water Quality & Supply	N5510	Other Reg Comp/Monitoring	N551007 Public Information/Notification
Water Quality & Supply	N5511	Special Projects	N551104 LIMS & QA/QC
Water Quality & Supply	N5512	Cedar HCP	N551201 INTERIM CHINOOK COHO
Water Quality & Supply	N5513	Cedar HCP	N551301 HCP STREAMFLOW GAUGING
Water Quality & Supply	N5513	Cedar HCP	N551302 SWITCHING CRITERIA STUDY
Water Quality & Supply	N5513	Cedar HCP	N551303 STEELHEAD REDD MONITORING
Water Quality & Supply	N5513	Cedar HCP	N551304 CHINOOK STUDIES
Water Quality & Supply	N5513	Cedar HCP	Salmonid Studies
Water Quality & Supply	N5514	WQ Monitoring	N551403 DRINKING WATER QUALITY MONITOR
Water Quality & Supply	N5515	HCP Fisheries	N551501 FRY CONDITION AT RELEASE
Water Quality & Supply	N5515	HCP Fisheries	N551502 FRY MARKING & EVALUATION
Water Quality & Supply	N5515	HCP Fisheries	N551503 FRY TRAPPING & COUNTING
Water Quality & Supply	N5515	HCP Fisheries	N551504 FISH HEALTH
Water Quality & Supply	N5515	HCP Fisheries	N551505 SHORT-TERM FRY REARING
Water Quality & Supply	N5515	HCP Fisheries	N551506 LAKE WASHINGTON PLANKTON STUDY
Water Quality & Supply	N5515	HCP Fisheries	N551508 ADULT SURVIVAL DISTRIBUTION
Water Quality & Supply	N5515	HCP Fisheries	N551509 PHENOTYPIC & GENETIC STUDY
Water Quality & Supply	N5516	Tolt DBO	N551601-CONTRACTOR PAYMENTS
Water Quality & Supply	N5516	Tolt DBO	N551603-MANAGEMENT COSTS
Resource Planning	N5609	Water Resource & Habitat Issues	N560903-ESA

Transmission

Program	Project	Project Name	Activity
Water Operation	N6540	WT - Headwork/Storage	N654001 Program Maintenance
Water Operation	N6540	WT - Headwork/Storage	N654002 Event Driven Repairs
Water Operation	N6541	WT - Transmission Pipeline Maint	N654101 Program Maintenance
Water Operation	N6541	WT - Transmission Pipeline Maint	N654102 Event Driven Repairs
Water Operation	N6542	WT - Value Op/Maint - Water Tran	N654201 Program Maintenance
Water Operation	N6542	WT - Value Op/Maint - Water Tran	N654202 Event Driven Repairs
Water Operation	N6543	WT - Grounds/Roads/ROW	N654301 Grade/gravel roads - P
Water Operation	N6543	WT - Grounds/Roads/ROW	N654302 Grade/gravel roads - E
Water Operation	N6543	WT - Grounds/Roads/ROW	N654303 Bridges/culverts - P
Water Operation	N6543	WT - Grounds/Roads/ROW	N654304 Bridges/culverts - E
Water Operation	N6543	WT - Grounds/Roads/ROW	N654305 Fences/gates - P
Water Operation	N6543	WT - Grounds/Roads/ROW	N654306 Fences/gates - E
Water Operation	N6543	WT - Grounds/Roads/ROW	N654307 Mow ROW - P
Water Operation	N6543	WT - Grounds/Roads/ROW	N654308 Mow ROW - E
Water Operation	N6543	WT - Grounds/Roads/ROW	N654309 Mow Other
Water Operation	N6544	WT - Facility Maintenance	N654401 Program Maintenance
Water Operation	N6544	WT - Facility Maintenance	N654402 Event Driven Repairs
Water Operation	N6545	WT - Castings	N654501 Casting Adjustments
Water Operation	N6546	WT - Customer Services	N654601 Communications/Dispatch
Water Operation	N6546	WT - Customer Services	N654602 Locating/Marking
Water Operation	N6547	WT - Damage by Others	N654701 P/L/ROW/Facility
Water Operation	N6548	WT - Transmission Shops	N654801 Shops/Fabrication
Water Operation	N6549	WT - General Expenses	N654905 Tools/small equipment
Water Operation	N6549	WT - General Expenses	N654906 Standy
Water Operation	N6549	WT - General Expenses	N654907 Truck Inventory
Water Operation	N6549	WT - General Expenses	N654908 Downtime - Job Related
Water Operation	N6549	WT - General Expenses	N654909-DISASTER-EMERG RESPONSE

1% Program

Program	Project	Project Name	Activity
Community Services	N5303	Resource Conservation	N530301 1% Conservation

EXHIBIT VII

Cascade Sub-regional System

The facilities included in this Exhibit incorporate all appurtenances including but not limited to rights of way, line valves, system meters, and remote automation devices.

A. Facilities used by Cascade:

- The NE 8th Street Feeder, from the Cedar Eastside Supply Line to the Bellevue pump station near the intersection of 151st PL NE and NE 8th Street
- The Bel-Red Road Feeder, from the Cedar Eastside Supply Line to the Cascade Point of Delivery in Bellevue at the intersection of Bel-Red Road and 132nd Ave NE
- The NE 24th Street Feeder, from the Cedar Eastside Supply Line to the Cascade Point of Delivery in Bellevue near the intersection of NE 24th Street and 132nd Ave NE

B. Other Sub-regional Transmission Facilities used in part by Cascade:

- SEGMENT 1 – Includes use by Bellevue, Coal Creek, Mercer Island, and Seattle and consists of:
  1. The portion of the of the original Mercer Island Pipeline from the tee off the Cedar Eastside Supply Line in Factoria Boulevard SE to the west flange of the main line tee at the east end of the 16-inch Mercer Slough Bridge Pipeline (30-inch).
- SEGMENT 2 – Includes use by Bellevue, Mercer Island, and Seattle and consists of:
  1. The portion of the of the original Mercer Island Pipeline from the west flange of the main line tee at the east end of the 16-inch Mercer Slough Bridge Pipeline to the west flange of the 20-inch valve west of the Enatai service to Bellevue (30-inch).
  2. The entire 16-inch Mercer Slough Bridge Pipeline (16-inch).
- SEGMENT 3 – Includes use by Tukwila and Seattle and consists of:
  1. The 20-inch pipeline in West Marginal Way from the West Seattle Pipeline to South Director Street.

Seattle may from time to time eliminate facilities from this list provided that it secures the written consent of Cascade in the event that Cascade is served by a tap or meter installation on the facility being eliminated. Seattle shall provide Cascade with 180 days prior written notice of any proposed change.

SEATTLE PUBLIC UTILITIES & CASCADE WATER ALLIANCE
MANAGEMENT AGREEMENT No. 7

REVISIONS TO EXHIBIT I

This Management Agreement No. 7 is entered into pursuant to Sections 3.6 B and 4.4 of the 2nd Amended and Restated Declining Block Water Supply Agreement between the City of Seattle ("Seattle") and the Cascade Water Alliance ("Cascade"), dated July ___, 2013 ("Agreement").

Management Agreement

1. The revised exhibit attached and incorporated herein as "Revised Exhibit I" replaces the existing Exhibit I in the Agreement in its entirety.
2. The Parties understand and agree that changes to any of the agreements listed in the Revised Exhibit 1 or new agreements involving supply, purchase or resale of water that Cascade or any Cascade Member enters into with a non-Cascade Member during the term of the Agreement should be reviewed by the Parties to determine which provision of 3.6 B applies to the situation and whether an update to the Revised Exhibit 1 by Management Agreement is necessary. The Parties also understand and agree that this will include a review of new agreements, or existing agreements that may remain in effect, between Cascade or a Cascade Member and a withdrawing Cascade Member at the time of the withdrawal in the event a current Cascade Member withdraws its membership from Cascade. Cascade agrees that it will promptly notify and provide copies of such agreements to Seattle as appropriate.
3. The Parties understand and agree that additional updates to the Revised Exhibit I may be required to address the electric contracts for pump stations included in Section 3.a of the Revised Exhibit I, which the parties will endeavor to complete by December 31, 2013.

Agreed to:

Ray Hoffman 7/15/13		Chuck Clarke 7/12/13	
Ray Hoffman, Director Seattle Public Utilities	Date	Chuck Clarke, CEO Cascade Water Alliance	Date

Attachment: Revised Exhibit I, dated July 11, 2013

2. **Those agreements providing wholesale water supply to Non-Cascade Member wholesale customers as of January 31, 2013 as referenced in Section 3.6 B.2:**

   a) Bellevue to WD 1 (Yarrow Point)

      @ NE 38th & 92nd Ave NE
      @ NE 42nd & 92nd Ave NE

   b) Bellevue to KC WD 22 (Beaux Arts)[6]

      @ 108th Ave SE & SE 28th St

   c) City of Issaquah to Issaquah Highlands Community Assoc for the Grand Ridge Drive Water Utility

      @ NE Harrison Dr & Grand Ridge Dr

   d) Sammamish Plateau W&SD to Overdale Water Assoc[7]

      @ 5215 229th Ave SE near SE 52nd St

3. **Other relevant Agreements as referenced in Section 4.4:**

   a) List of electric contracts for pump stations owned and operated by Cascade Members and connected to the Tolt Eastside Supply Line according to Section 8.6 B.3 of this Agreement:

      1. Between the City of Bellevue and the City of Seattle, effective August 1983, pursuant to Ordinance #111276 for SE 28th pumping station (50% / 50%) and N.E. 8th pumping station (Bellevue 60% / Seattle 40%)

   b) Sammamish Plateau W&SD to/from Northeast Sammamish W&SD[8]

      @ 216th Ave NE & NE 17th
      @ 1910 226th Ave NE

   c) Redmond/Woodinville Water District Interlocal Agreement and 7 Amendments[9]

      1. East of 184th Ave NE
      2. Blakely Ridge (Trilogy)
      3. 177th Ave NE & 184th Ave NE
      4. 167th Ave NE & 172nd Ave NE
      5. Shadowbrook Phase II
      6. Redmond Assembly Plat
      7. East of 176th Ave NE

d) Skyway from Renton[10]

@ 80th Ave S & S 116th St

e) Interlocal Agreement Implementing the City of Bellevue's Partial Assumption of the Coal Creek Utility District[11]

@ Hazelwood Ln
@ SE 64th & Lake Washington Blvd
@ 114th Ave SE
@ 119th Ave SE
@ 123rd Ave SE
@ Newcastle & 126th Ave SE
@ Newcastle & 128th Ave SE
@ Coal Creek & SE 66th ST

Notes:

[1] No agreement exists for this intertie connection. Cascade reported as emergency intertie.
[2] See Section 5 of the Agreement for Joint Operation of Water Storage Facilities.
[3] See Section 5 of the Agreement for Joint Lease, Construction and Operation of Water Storage and Transmission Facilities, generally for wheeling.
[4] Emergency purposes includes meeting peak demand. Any agreement for use for purposes other than emergency under Section 4 of the Agreement not included here.
[5] Emergency purposes, max quantity 2.7 MGD.
[6] Cascade reported as seasonal supplemental supply.
[7] Cascade reported that by resolution, converted from emergency supply to continuous wholesale supply pending assumption of the Overdale service area expected within a year.
[8] Cascade reported as continuous supply through "zero-net exchange".
[9] Interlocal agreement establishes common service area boundary, provisions for District to supply water to Redmond for certain service areas, and to determine on case by case basis which entity will serve developments that straddle common service boundary line.
[10] See Section 4 and Exhibit B of Contract for Water Supply and Joint Storage and Transmission.
[11] See Section XIV of the Interlocal Agreement.

SEATTLE PUBLIC UTILITIES & CASCADE WATER ALLIANCE
MANAGEMENT AGREEMENT No. 9

REVISIONS TO EXHIBIT II

This Management Agreement No. 9 is entered into pursuant to Section 4.1 of the 2nd Amended and Restated Declining Block Water Supply Agreement between the City of Seattle ("Seattle") and the Cascade Water Alliance ("Cascade"), dated July 15, 2013 ("Agreement").

Management Agreement

1. The revised exhibit attached and incorporated herein as "Revised Exhibit II" replaces the existing Exhibit II in the Agreement in its entirety.

Agreed to:

Ray Hoffman	5/20/14	Chuck Clarke	5/27/14
Ray Hoffman, Director Seattle Public Utilities	Date	Chuck Clarke, CEO Cascade Water Alliance	Date

Attachment: Revised Exhibit II, dated March 27, 2014

Exhibit II

CASCADE POINTS OF DELIVERY[1], MINIMUM HYDRAULIC GRADIENTS, AND MAXIMUM FLOW RATES OF WATER SUPPLIED

POINT OF DELIVERY (POD)							MINIMUM HYDRAULIC GRADIENT UPSTREAM OF SEATTLE METER (FEET NAVD-88 Datum) [3]	MAXIMUM FLOW UP TO WHICH HYDRAULIC GRADIENT IS GUARANTEED UNDER THE AGREEMENT [3] [4] (gpm)
SEATTLE METER LOCATION	CASCADE MEMBER OPERATING DOWNSTREAM OF POD	SEATTLE STATION NUMBER	SEATTLE PIPELINE SEGMENT NUMBER	SEATTLE METER SIZE (IN.)	CASCADE MEMBERS SERVED	SIZE OF CASCADE MEMBER METER(S), (IN.) [2]		
132nd Ave. NE & NE 113th Street	Kirkland	74	1	10"	Kirkland, Redmond	12"	555	3,540
132nd Ave. NE & NE 85th Street	Kirkland	75	1	16"	Kirkland, Redmond	None	535	4,890
140th Ave. NE & NE 70th Street	Kirkland	72	2	12"	Kirkland, Redmond	12"	520	1,430
140th Ave. NE & 40th Street	Bellevue	65	2	10"	Bellevue, Redmond	18"	500	3,800
132nd Ave. NE & Bel-Red Road	Bellevue	62	2	12"	Bellevue	12"	470	4,200
132nd Ave. NE & NE 24th Street	Bellevue	63	2	10"	Bellevue	12"/8" [5]	455	3,900
152nd Ave. NE & NE 8th Street	Bellevue	61	2	24"	Bellevue, Redmond	16"	460	3,000
145th Pl. SE & SE 28th Street	Bellevue	58	3	12"	Bellevue	16"	470	2,700
14509 SE Newport Way	Bellevue	60	3	10"	Bellevue. Issaquah	12"	525	2,300
14509 SE Newport Way	Bellevue	182	3	10"	Bellevue, Issaquah, Sammamish Plateau	12"/8"/8" [6]	525	5,810
132nd Ave SE & SE 26th ST	Bellevue	59	8	8"	Bellevue	8"	425	1,300
128th Ave. SE & Newport Way	Bellevue	56	8	8"	Bellevue	8"	435	800
128th Ave SE & SE 56th ST	Bellevue	47	8	8"	Bellevue	6"	440	Backup service
128th Ave SE & Newport Way	Bellevue	55	8	6"	Bellevue	6"	435	625
128th Ave SE & SE 70th ST	N/A	52	8	12"	Bellevue		445	1700 [7]

POINT OF DELIVERY (POD)							MINIMUM HYDRAULIC GRADIENT UPSTREAM OF SEATTLE METER (FEET NAVD-88 Datum) [3]	MAXIMUM FLOW UP TO WHICH HYDRAULIC GRADIENT IS GUARANTEED UNDER THE AGREEMENT [3] [4] (gpm)
SEATTLE METER LOCATION	CASCADE MEMBER OPERATING DOWNSTREAM OF POD	SEATTLE STATION NUMBER	SEATTLE PIPELINE SEGMENT NUMBER	SEATTLE METER SIZE (IN.)	CASCADE MEMBERS SERVED	SIZE OF CASCADE MEMBER METER(S), (IN.) [2]		
Mercer Is. Pipeline & 108th Ave. SE	Bellevue	66	9	8"	Bellevue	8"	420	800
124th Ave SE & SE 38 PL	Bellevue	124	9	8"	Bellevue	8"	425	1,400
Cornell Ave S & S 112th Street	Skyway	172	4	6"	Skyway	None	375	Backup service [8]
84th Ave. S & S 134th Street	Skyway	1	10	8"	Skyway	None	455	210
Beacon Ave S & S 124th Street	Skyway	5	10	8"	Skyway	8"	455	720
W Marginal Place & S 102nd ST	Tukwila	170	5	12"	Tukwila	12"	300	300
51st Ave S & S Leo Street	Tukwila	169	12	8"	Tukwila	8"	455	70
47th Ave S & S Victor Street	Tukwila	173	12	6"	Tukwila	6"	425	Backup service
South Center Parkway & Tukwila Parkway	Tukwila	13	13	10"	Tukwila	10"	460	800
West Valley Hwy & S 162nd Street	Tukwila	14	13	8"	Tukwila	8"	460	Backup service
Christensen Rd. & Baker Rd	Tukwila	15	13	8"	Tukwila	10"	460	840
53rd Ave S & S 160th Street	Tukwila	16	13	6"	Tukwila	6"	460	20
E Marginal Way & S 112th Street	Tukwila	183	15	12"	Tukwila	12"	445	900
7749 E Marginal Way S	Tukwila	168	20	12"	Tukwila	12"	N/A	Backup service [8]
Trilogy Parkway NE & NE 125 Street (East meter)	Redmond	164	28	10"	Redmond, Sammamish Plateau	16"	610	2900 [9]
Trilogy Parkway NE & NE 125 Street (West Meter)	Redmond	186	28	10"	Redmond, Sammamish Plateau	16"	610	Redundant Supply [9]
160th Ave NE & NE 104th Street	Redmond	165	28	10"	Redmond	16"	515	2420 [10]
NE 172nd Street & Tolt Pipeline No. 2	Redmond	185	28	6"	Redmond	16"	515	Redundant Supply [10]
							TOTAL:	51,375

POINT OF DELIVERY (POD)							MINIMUM HYDRAULIC GRADIENT UPSTREAM OF SEATTLE METER (FEET NAVD-88 Datum) [3]	MAXIMUM FLOW UP TO WHICH HYDRAULIC GRADIENT IS GUARANTEED UNDER THE AGREEMENT [3] [4] (gpm)
SEATTLE METER LOCATION	CASCADE MEMBER OPERATING DOWNSTREAM OF POD	SEATTLE STATION NUMBER	SEATTLE PIPELINE SEGMENT NUMBER	SEATTLE METER SIZE (IN.)	CASCADE MEMBERS SERVED	SIZE OF CASCADE MEMBER METER(S), (IN.) [2]		

Notes:

1. All Points of Delivery (PODs) provide a wholesale level of service. Seattle bears no responsibility for retail service level obligations, such as fire flow or emergency backup.
2. This column is for informational purposes only, i.e., there are no related terms or conditions under the Agreement. Cascade will be responsible for providing Seattle with updated Cascade Member information from time to time.
3. These minimum hydraulic gradients and maximum flows relate to contractual conditions under the Agreement, but do not necessarily reflect practical or operational limits at particular PODs.
4. Except as provided in Note 7 below, all or some of the maximum flows allocated to each POD may be reallocated to another POD on the same Pipeline Segment Number, including those PODs designated as Backup Services. In that case, minimum hydraulic gradients are not guaranteed.
5. Flow branches into two metered Bellevue pipelines downstream of Station 63.
6. The 12" Bellevue meter is located at 4112 161st Ave SE. The two 8" meters that each serve Issaquah and the Sammamish Plateau are located at 16104 SE Newport Way in a single meter vault.
7. The maximum flow shown is the portion serving Bellevue via Coal Creek Utility District. All or a portion of this maximum flow may be reallocated from this POD to other PODs on the same Pipeline Segment Number, but additional flows from other PODs may not be reallocated to this POD.
8. When a Backup Service is the only POD on a Pipeline Segment Number, the Cascade Member operating the Backup Service can re-allocate all or portions of the maximum flows from other PODs it operates to that Backup Service, regardless of Pipeline Segment Number. In that case minimum hydraulic gradients are not guaranteed.
9. The maximum flow that can be shared between Stations 164 and 186 is 2,900 gpm.
10. The maximum flow that can be shared between Stations 165 and 185 is 2,420 gpm.

AGREEMENT FOR THE SALE OF WHOLESALE WATER

BETWEEN
THE CITY OF TACOMA,
DEPARTMENT OF PUBLIC UTILITIES, WATER DIVISION

AND

CASCADE WATER ALLIANCE

TABLE OF CONTENTS

Subject		Page
1	Definitions	2
2	Implementation Agreements and Exhibits to the Agreement	4
3	Effective Date and Term of the Agreement	4
4	Sale and Purchase of Wholesale Water	5
5	Commencement of Wholesale Water Deliveries	5
6	Wholesale Water Supply	5
7	Wholesale Water Quality, Delivery Pressure and Metering	7
8	Wholesale Service Connection and Interconnection Facilities	7
9	Pricing of Wholesale Water	8
10	Payments	10
11	Planning and Coordination	12
12	Termination of the Section 6.2 Water Deliveries	12
13	Water Management and Scheduling	13
14	Meter Ownership, Calibration and Maintenance	13
15	Wholesale Water Deliveries in Excess of Schedules	14
16	Sharing Water Shortages	15
17	Title and Risk of Loss	15
18	Regulatory Compliance	15
19	No Right or Claim to Water	15
20	Audit and Access to Records	16
21	Dispute Resolution	16
22	Uncontrollable Forces	16
23	Notices	17
24	Default of Obligation	17
25	Representations and Warranties	18
26	Assignment and Other Arrangements	18
27	Waivers	19
28	Amendments	19
29	Entire Agreement	19
30	Interpretation of Agreement	19
31	Governing Law and Venue	19
32	Duty of Good Faith	20
33	Counterparts	20

This Agreement for the Sale of Wholesale Water ("Agreement") between the City of Tacoma, Department of Public Utilities, Water Division (Tacoma) and Cascade Water Alliance ("Cascade"), is made and entered into effective this 13th day of October, 2005 (Effective Date). Tacoma and Cascade are sometimes referred to herein in the singular as "Party" and in the plural as "Parties".

WHEREAS, Tacoma is a municipality organized and operating under the laws of the State of Washington; and

WHEREAS, Cascade is a public nonprofit corporation established by Interlocal Contract under the authority of Chapter 39.34 RCW, the Interlocal Cooperation Act, and incorporated under Chapter 24.03 to further the interests of its members with respect to water supply and to work cooperatively with other water supply entities; and

WHEREAS, Tacoma and Cascade have the responsibility to plan, design, construct and operate water supply facilities to meet the municipal, commercial and industrial water supply needs of their respective customers and member organizations; and

WHEREAS, Tacoma, which has nearly completed the construction of its Second Supply Project, expects to have the supply capacity, together with Tacoma's other water resources, to meet Tacoma's projected water supply needs for the next fifty years, in addition to meeting a portion of the water needs of Tacoma's project partners, Lakehaven Utility District, Covington Water District and the City of Kent; and

WHEREAS, Cascade is contracting for, and has plans to construct additional water supplies to supplement its existing water supplies to meet its immediate and long-term water supply needs; and

WHEREAS, Tacoma and Cascade are each seeking cost effective ways to utilize available regional capacity, and to plan for water resources to meet the full future water supply needs of their respective customers; and

WHEREAS, Cascade could make beneficial use of available supply in Tacoma's Second Supply Project both permanently and in the near term until such time as other water resources are available to meet the needs of Cascade and its member utilities; and

WHEREAS, Cascade wishes to purchase from Tacoma, and Tacoma wishes to sell to Cascade a supply of water both permanently and for a finite period of years.

NOW, THEREFORE, the Parties agree as follows.

1. DEFINITIONS

1.1 When used with initial capitalization in this Agreement, the following terms shall have the meanings set forth below.

1.1.1 "Due Date" means the date by which payment of any invoice issued pursuant to section 10 of this Agreement is due to Tacoma, which date shall be the close of business on the thirtieth (30th) day after an invoice is issued, provided, however, that if such thirtieth day falls on a Saturday, Sunday or legal holiday observed by Tacoma, the Due Date shall be extended until the close of business of the next regular business day of Tacoma.

1.1.2 "Effective Date" shall have the meaning given such term in section 3.

1.1.3 "Flow Control Valve" means the valve located in the vicinity of the Point(s) of Delivery for Cascade that controls the volume of water that is delivered to Cascade.

1.1.4 "Howard Hanson Dam Additional Storage Project" or "Storage Project" shall have the meaning given such term in the Project Agreement.

1.1.5 "Implementation Agreement" means a written agreement executed by the Superintendent of Tacoma Water and the General Manager of Cascade setting out the understandings of the Parties regarding the implementation and administration of this Agreement as set forth in section 2.

1.1.6 "Initial Delivery Date" means the date on which Tacoma actually commences delivery of wholesale water pursuant to the terms of this Agreement.

1.1.7 "Interest Rate" means for each day that it is applied a rate equal to one-three hundred and sixty-fifth (1/365) of the prime interest rate for preferred customers established from time to time by the Bank of America, or such other bank as may be designated by the Parties, plus three (3) percentage points.

1.1.8 "Interconnection Facilities" mean the facilities, other than the Wholesale Service Connection, that need to be constructed by Cascade to take delivery of wholesale water through the Wholesale Service Connection and convey such water to Cascade's transmission main.

1.1.9 "Isolation Valve" means a positive shut off valve that shall be

installed at the location in each water system that is used to accept or deliver water through the Wholesale Service Connection.

1.1.10 "Minimum Monthly Bill" shall have the meaning given such term in section 9.2.

1.1.11 "Operating Year" means any consecutive twelve (12) month period commencing on each July 1st, and ending on the following June 30th.

1.1.12 "Peak Season" means the period starting June 1 and ending September 31 during each year during the Term.

1.1.13 "Peaking Factor" means the factor set forth in section 6.3.

1.1.14 "Project Agreement" means the Second Supply Project Agreement between the City of Tacoma and the City of Kent, Covington Water District and Lakehaven Utility District.

1.1.15 "Project Operator" means Tacoma in its role as the party responsible for the operation and maintenance of the Tacoma Second Supply Project.

1.1.16 "Requested Initial Delivery Date" means the date designated by Cascade pursuant to section 5.2 for Tacoma to commence delivery of wholesale water pursuant to section 6 of this Agreement.

1.1.17 "Second Diversion Right or Permit and First Diversion Claim" means those water rights that authorize Tacoma to divert and use water from the Green River (together, the Diversion Rights).

1.1.18 "Surcharge Rate" means a rate equal to four times the highest wholesale water rate for sales to Cascade for the period of excess use.

1.1.19 "TMC" means the City of Tacoma 's Municipal Code.

1.1.20 "Uncontrollable Force" means any event or occurrence that is beyond the reasonable control of a Party and which by the exercise of due diligence and reasonable foresight such Party could not have reasonably been expected to avoid or remove, and includes but is not limited to flood, earthquake, storm, accident, fire, lightning and other natural catastrophes, epidemic, war, labor or material shortage, strike or labor dispute, acts of terrorism or sabotage, and also includes restraint by an order of a court of competent jurisdiction or by regulatory authorities against any action taken or not taken by a Party, after a good faith effort by such Party to obtain: (a)

relief from such order; or (b) any necessary authorizations or approvals from any governmental agency or regulatory authority.

1.1.21 "Wholesale Service Connection" means a physical connection between water mains of the Parties to this Agreement, at a specifically identified point or points, where water will be transferred from one Party's system to the facilities of the other Party.

1.1.22 "Wholesale Water Sales" means sales of water by Tacoma to entities that are not retail customers of Tacoma and which resell to end users the water that they purchase from Tacoma.

2. IMPLEMENTATION AGREEMENTS AND EXHIBITS TO THE AGREEMENT

2.1 The Superintendent of Tacoma Water and the General Manager of Cascade may, at their discretion, execute Implementation Agreements regarding the implementation or administration of this Agreement in a manner that does not affect the substantive rights of the parties under this Agreement.

2.2 The following exhibits, which are attached to this Agreement, are hereby made a part of and incorporated into this Agreement as if fully set forth herein:

Exhibit A - Map locating the Wholesale Service Connection, delivery meter and related facilities.
Exhibit B - Sample Weekly Operations Report
Exhibit C - Arbitration Procedures

The Superintendent of Tacoma Water and the General Manager of the Cascade are authorized to prepare Exhibits showing the Wholesale Service Connection and the location of the delivery meter upon the installation of those facilities and to adopt such Exhibits for purposes of this Agreement.

2.3 If and to the extent that there is a conflict between the terms set forth in an Implementation Agreement or in any of the foregoing Exhibits and those set forth in the body of this Agreement, the terms set forth in the body of this Agreement shall prevail.

3. EFFECTIVE DATE AND TERM OF THE AGREEMENT

3.1 This Agreement shall take effect when executed by the Parties, and shall remain in full force and effect until the date that Tacoma ceases making Wholesale Water Sales, unless terminated (in whole or in part) earlier in accordance with sections 11, 12 or 24 ("Term"). The Term of this Agreement may be extended by written agreement of the Parties.

3.2 All obligations incurred during the Term shall survive the termination or expiration of this Agreement.

4. SALE AND PURCHASE OF WHOLESALE WATER

4.1 For the Term of this Agreement, Tacoma agrees to sell and make available to Cascade, and Cascade agrees to accept delivery of and pay for quantities of wholesale water, all pursuant to the provisions of this Agreement.

4.2 The water sold by Tacoma to Cascade pursuant to this Agreement shall be water available from the Diversion Rights. The use made of such wholesale water shall be subject to the restrictions on the place of use applicable to the Diversion Rights, copies of which have been provided to Cascade by Tacoma.

5. COMMENCEMENT OF WHOLESALE WATER DELIVERIES

5.1 Tacoma shall stand ready to commence deliveries of the amounts of wholesale water set forth in section 6 not later than October 1, 2008. If the Howard Hanson Storage Project is not operational by October 1, 2012, then Tacoma may, based on Tacoma's forecast of its water supplies without the Howard Hanson Storage Project, reduce its obligation to sell water to Cascade under section 6.2 (including a reduction to zero deliveries) by providing written notice to Cascade of such reduction to its water deliveries not less than ninety (90) days prior to the date the adjusted deliveries will commence.

5.2 Except as provided in section 5.1 deliveries of wholesale water by Tacoma to Cascade pursuant to section 6 shall commence on the Requested Initial Delivery Date designated by Cascade by written notice provided to Tacoma not less than ninety (90) days prior to the Requested Initial Delivery Date, which date cannot occur prior to October 1, 2008.

6. WHOLESALE WATER SUPPLY

6.1 From the Initial Delivery Date until the date that Tacoma ceases making Wholesale Water Sales, Tacoma shall make available to Cascade at the Wholesale Service Connection wholesale water in the amount of four million gallons per day (4 MGD) at a uniform hourly delivery rate.

6.2 In addition to the wholesale water deliveries set forth in section 6.1, on and after the Initial Delivery Date, Tacoma shall make available to Cascade at the Wholesale Service Connection wholesale water in the following amounts:

> 6.2.1 From the Initial Delivery Date through December 31, 2026, six million gallons per day (6 MGD) at a uniform hourly delivery rate.

6.2.2 From January 1, 2027 through December 31, 2027, 4 million gallons per day (4 MGD) at a uniform hourly delivery rate.

6.2.3 From January 1, 2028 through December 31, 2028, three million gallons per day (3 MGD) at a uniform hourly delivery rate.

6.2.4 From January 1, 2029 through December 31, 2029, two million gallons per day (2 MGD) at a uniform hourly delivery rate.

6.2.5 From January 1, 2030 through December 31, 2030, one million gallons per day (1 MGD) at a uniform hourly delivery rate.

6.2.6 On and after January 1, 2031, Tacoma shall have no obligation to provide to Cascade and Cascade shall have no right to receive from Tacoma wholesale water deliveries pursuant to this section 6.2.

6.3 The wholesale water deliveries set forth in sections 6.1 and 6.2 may, as requested by Cascade, be increased during the Peak Season by a Peaking Factor of 1.33. For example, application of the Peaking Factor to the wholesale water deliveries set forth in section 6.1 would result in deliveries of 5.32 million gallons per day.

6.4 Cascade may request in writing that Tacoma investigate the feasibility of providing to Cascade wholesale water on a temporary basis in addition to the amounts set forth in sections 6.1 and 6.2. The written request from Cascade to Tacoma shall state with specificity the wholesale water amounts requested (including Peak Season deliveries), the requested commencement date and termination date of such deliveries. Upon receipt of such written request, Tacoma will review its water demand and supply forecasts expeditiously to determine if, in the sole judgment of Tacoma, it will have sufficient water supplies to fulfill the request for additional deliveries of wholesale water in whole or in part. In the event that Tacoma determines that it can fulfill, in whole or in part, the request of Cascade for additional deliveries of wholesale water, such additional deliveries shall be priced according to Tacoma's wholesale water rate, which additional supply shall be subject to the Surcharge Rate only if Cascade takes such temporary water in excess of the amounts which Tacoma has agreed to supply. Tacoma and Cascade shall, prior to the commencement of such additional deliveries, execute an agreement setting forth all of the terms and conditions applicable to such additional temporary deliveries.

7. WHOLESALE WATER QUALITY, DELIVERY PRESSURE AND METERING

7.1 The quality of wholesale water made available to Cascade pursuant to section 6 shall be in compliance with all applicable state and federal drinking water laws, regulations and standards, and at the pressures agreed to by the Parties.

7.2 The amounts of wholesale water made available to Cascade will be measured by a delivery meter located at or in the vicinity of the Wholesale Service Connection, as agreed to by the Parties.

8. WHOLESALE SERVICE CONNECTION AND INTERCONNECTION FACILITIES

8.1 All costs associated with the design and construction of the Wholesale Service Connection, including the water main, service pipe, automated remote valve shut off, meter(s), appurtenances and vaults, shall be the responsibility of Cascade. Tacoma shall be responsible for preparation of the design of the Wholesale Service Connection and for the cost of repair and maintenance of the Wholesale Service Connection up to and including the outlet of the meter. The meter(s) shall be located as close to the Wholesale Service Connection as possible. Tacoma will coordinate the design and construction of the Wholesale Service Connection with Cascade. All Wholesale Service Connections with Tacoma are required to have automated meter reading (AMR) installed on them. Cascade will be responsible for the costs of installing the phone connection for the AMR and the costs to install the equipment with the meter.

8.2 Cascade shall be responsible for designing, engineering, permitting, constructing and financing any and all Interconnection Facilities necessary for Cascade to accept delivery of the wholesale water made available by Tacoma pursuant to section 6.

8.3 Cascade will submit to Tacoma for review, revision and approval the designs, specifications and construction schedule for the Interconnection Facilities. Tacoma will not unreasonably delay its review of designs, specifications and construction schedules submitted to it by Cascade, and will not unreasonably withhold its approval of such designs, specifications and construction schedule.

8.4 Cascade will not commence construction of the Interconnection Facilities unless and until Cascade has received from Tacoma approved designs, specifications, and construction schedule (as such documents may be revised by Tacoma).

8.5 Cascade will construct and operate the Interconnection Facilities in a manner that is consistent with the provisions of all permits, regulatory approvals and agreements governing the construction and operation of the Second Supply Project.

8.6 Prior to the submission to Tacoma of designs, specifications and construction schedule for the Interconnection Facilities, Cascade and Tacoma will negotiate a mutually agreeable amount of compensation payable by Cascade to Tacoma for the use of any property, rights of way and for work performed by Tacoma staff and consultants in facilitating the construction of Interconnection Facilities, exclusive of the activities undertaken by Tacoma pursuant to section 8.3.

8.7 Cascade agrees that Tacoma owns the Isolation Valve directly off of the Tacoma system, piping from the Tacoma Isolation Valve to the meter, the meter vault and the meter and telemetry equipment, all as will be set forth on Exhibit A. Maintenance and operation costs for this equipment are the responsibility of Tacoma. Any capital costs related to this equipment, including upgrades or replacement and renewal are the responsibility of Cascade.

8.8 The Wholesale Service Connection shall be governed by the terms of this Agreement. No future Wholesale Service Connections shall be permissible without a subsequent and separate written agreement between the Parties. Neither Party shall be obligated to agree to or execute any agreement or permit with the other Party to construct additional Wholesale Service Connection(s).

9. PRICING OF WHOLESALE WATER

9.1 Commencing with the month in which deliveries of wholesale water to Cascade pursuant to section 6 begin, and for each month thereafter during the Term, Cascade will pay to Tacoma a monthly payment equal to the amount of wholesale water delivered in such month, as measured at the delivery meter, times the wholesale water service rate plus the readiness to serve charge as set forth in TMC Section 12.10.400 of the City of Tacoma Water Rates and Regulations (or the successor TMC Section), subject to Cascade's obligation to pay the Minimum Monthly Bill in accordance with section 9.2

9.2 Regardless of whether Cascade has or has not established a Requested Initial Delivery Date, Cascade shall for the period 2009 through 2026 pay not less than the Minimum Monthly Bill. The Minimum Monthly Bill shall be determined by multiplying the Minimum Daily Purchase Amount ("P") set forth below, times the number of days in each month ("D"), times the wholesale water service rate ("R"), (P x D x R = monthly minimum payment).

Calendar Year	Minimum Daily Purchase Amount (in MGD)
2009	2.0
2010	2.0
2011	2.0
2012	3.0
2013	3.0

2014	3.0
2015	4.0
2016	4.0
2017	4.0
2018	5.0
2019	5.0
2020	6.0
2021	6.0
2022	7.0
2023	7.0
2024	8.0
2025	8.0

Provided, however, after the Initial Delivery Date, whenever Tacoma declares a supply curtailment or cannot otherwise deliver the minimum water supply Cascade shall be billed only for the water actually delivered.

9.3 In the event that the sum of the Minimum Monthly Bills for a calendar year exceeds the sum of the payments made by Cascade during such calendar year pursuant to Section 9.1, then Tacoma will bill Cascade in February of the immediately following calendar year during the period of 2010 through 2026 the amount by which the sum of the Minimum Monthly Bills for such calendar year exceeded the payments made pursuant to Section 9.1 during such calendar year.

9.4 The water service rate and the readiness to serve charge may be periodically adjusted and shall be applicable as set forth in the rate schedule as adopted by the Public Utility Board and Tacoma City Council.

9.5 Cascade shall pay Tacoma System Development Charges ("SDCs") of $16,484,000 for water supplied pursuant to section 6.1 as follows:

9.5.1 Within one-hundred and twenty (120) days of the Effective Date, Cascade will pay Tacoma an initial payment of twenty percent (20%) of the SDCs or $3,296,800.

9.5.2 After such initial payment, the remaining balance of the SDCs will be paid in not more than ten (10) equal annual payments, with the first such payment due on the first anniversary of the Effective Date and thereafter on each successive anniversary until the SDCs are paid in full.

9.6. Cascade shall pay Tacoma a Capacity Reservation Fees ("CRFs") of $9,420,442 for water supplied pursuant to section 6.2 as follows:

9.6.1 Within one-hundred and twenty (120) days of the Effective Date, Cascade will pay Tacoma an initial payment of twenty percent (20%) of

the CRFs or $1,884,088.

9.6.2 After such initial payment, the remaining balance of the CRFs will be paid in not more than ten (10) equal annual payments, with the first such payment due on the first anniversary of the Effective Date and thereafter on each successive anniversary until paid in full.

9.7 In addition to the annual payments pursuant to sections 9.5 and 9.6, Cascade will on the same date pay Tacoma interest calculated on a monthly basis (the first day of every month) on the outstanding unpaid balance of the SDCs and CRFs calculated using the prime interest rate, as reported by the Wall Street Journal ten days before the date that the monthly interest calculation is made, minus two percent (2%). Cascade may, at its election, prepay all or any portion of the SDCs and/or CRFs outstanding balance, in which case the interest accrued to the date of such prepayment shall also be paid to Tacoma, and the remaining unpaid balance shall be paid in equal installments.

9.8 If Tacoma exercises its option pursuant to section 5.1 to reduce water deliveries under section 6.2, then the CRFs payable under section 9.6 will be reduced proportionately. For example, if the total deliveries under section 6.2 are reduced by Tacoma by twenty percent (20%), then the total amount of CRFs payable under section 9.5 will be reduced by twenty percent (20%). Such reduction will be accomplished by first eliminating any CRFs not yet paid by CWA, and then by Tacoma refunding to Cascade any CRFs (or portions thereof) already paid starting with the most recent CRFs payment made by Cascade until such proportionate reduction is achieved. Any such refunds shall include interest calculated from the date of payment to the date of the refund, at the interest rate described in section 9.7. Any such refund shall be paid by Tacoma to Cascade within ninety (90) days of the notice issued pursuant to section 5.1.

9.9 An interest component will be paid by Tacoma to Cascade on the CRF payments eliminated or refunded pursuant to section 9.8. For the CRFs (or portions thereof) that are eliminated or refunded pursuant to section 9.8, the interest component will be calculated from the Effective Date to the date the payment of any refund is due pursuant to section 9.8. Such interest component will be the sum of the annual interest calculated for each of the years that the amount refunded or eliminated was outstanding, using the interest rate for each such year charged Cascade by Tacoma pursuant to section 9.7.

10. PAYMENTS

10.1 Tacoma shall prepare and forward to Cascade in the first week of each month during the Term an invoice for the payment of amounts due pursuant to this Agreement for the preceding month. Each such invoice shall set forth the payment due from Cascade to Tacoma. In addition, during the first week of each February during the

2010 through 2026 period, when required pursuant to section 9.3, Tacoma shall prepare and forward to Cascade an invoice for any amounts due to Tacoma under section 9.3.

10.2 Cascade may request from Tacoma, and Tacoma shall promptly provide to Cascade, any documentation or other information that Cascade may reasonably require to understand the nature of the costs contained in any invoice issued pursuant to this section 10.

10.3 Payment of any and all invoices forwarded to Cascade by Tacoma pursuant to this section 10 shall be due and payable by Cascade on or before the Due Date, with payment to be made by wire transfer or such other means as agreed to by Tacoma and Cascade.

10.4 If full payment of any invoice is not received by Tacoma on or before the Due Date, such payment shall be considered past due, and the unpaid amount of such invoice shall accrue interest at the Interest Rate. Further, if an invoice or any portion thereof remains unpaid for a period of thirty (30) days after the Due Date, Tacoma may elect to suspend deliveries due to Cascade pursuant to section 6 until Cascade has paid all amounts due and owing, and any late payment charges due thereon.

10.5 If Cascade disputes all or any portion of an invoice issued by Tacoma pursuant to this section 10, Cascade shall pay such invoice in full, and shall indicate in writing to Tacoma the portions of the invoice that Cascade disputes and the reasons therefore. The Parties shall make a good faith effort to resolve such dispute. If such efforts are unsuccessful, either Cascade or Tacoma may seek resolution of the dispute pursuant to section 21.

10.6 If the resolution of any dispute over an invoice, whether by agreement of the Parties or by dispute resolution pursuant to section 21, results in the payment of money from Tacoma to Cascade, such payment shall include an interest payment for the period commencing with the date the disputed invoice was paid, and ending on the date the payment resolving the dispute is made to the Cascade, calculated using the Interest Rate.

10.7 Cascade hereby covenants and agrees that it shall establish, maintain and collect rates or charges for water and other services, facilities and commodities sold, furnished or supplied by it to its members which shall be adequate to provide revenues sufficient to enable Cascade to make the payments required to be made pursuant to the terms of this Agreement, and to pay all other charges and obligations payable from or constituting a charge or lien upon such revenues.

10.8 Payments by Cascade of SDCs, CRFs or of amounts under each invoice issued pursuant to this section 10 shall constitute an operating expense for water purchased by Cascade.

11. PLANNING AND COORDINATION

11.1 Cascade will develop a long-term supply plan and acquire additional water supplies to establish a firm supply for its members. Cascade shall provide to Tacoma a copy of such long-term supply plan, which plan shall also demonstrate that Cascade has planned for and has the ability to develop sufficient water supplies for its members to replace the wholesale water deliveries set forth in section 6.2 upon the expiration of such water delivery obligation under this Agreement. If Cascade cannot demonstrate by December 1, 2015 to the satisfaction of Tacoma that it will develop sufficient replacement water supplies to replace the water sale set forth in section 6.2, then the water delivery obligation set forth in section 6.2 may be terminated in whole or in part by Tacoma no sooner than January 1, 2016 by providing Cascade written notice of such termination six months prior to date of termination established by Tacoma in such written notice. In such event, the water delivery obligation of Tacoma to Cascade under this Agreement shall be limited to the delivery obligation set forth in sections 6.1 and 6.3.

11.2 In the event that Tacoma exercises it right to terminate its entire delivery obligation under section 6.2 pursuant to section 11.1, then Tacoma will make a payment to Cascade not later than sixty (60) days after the effective date of such termination. If such termination occurs in 2016, the payment from Tacoma to Cascade will be the sum of $4,148,111. If such termination occurs in any year subsequent to 2016, the payment due from Tacoma to Cascade shall be reduced by the amount of $415,000 for each year after 2016 that such termination occurs. If Tacoma only terminates its delivery obligation under section 6.2 in part, then the payment due from Tacoma to Cascade will be prorated to reflect the percentage of the total water deliveries under section 6.2 that were terminated pursuant to section 11.1. For example, if twenty percent (20%) of the total water delivery obligation under section 6.2 is terminated pursuant to section 11.1, then the payment due by Tacoma to Cascade will equal twenty percent (20%) of $4,146,111.

11.3 The Parties will seek to adopt conservation plans and to coordinate regional supply scheduling and other operational programs that promote efficient use of water supplies, facilities, financial and staff resources.

12. TERMINATION OF THE SECTION 6.2 WATER DELIVERIES

If after October 1, 2008 Tacoma has stood ready to serve water pursuant to Section 6 for a five year period, and during such period Cascade has not established a Requested Initial Delivery Date for the delivery amounts set out in section 6.2, then Tacoma may terminate its water delivery obligations under section 6.2 of this Agreement by providing Cascade written notice of such termination not less than one hundred eighty (180) days prior to the date of termination specified in such notice. In the event of such termination, Cascade shall not be obligated to make any further annual payments under section 9.6. The permanent supply purchased by Cascade under section 6.1 of this Agreement, and all payment obligations associated therewith, shall be unaffected by such termination.

13. WATER MANAGEMENT AND SCHEDULING

13.1 Not later than May 1 of each year during the Term prior to a year in which deliveries will be made pursuant to section 6, Cascade will submit to Tacoma a written draft operating plan for the next Operating Year. Each such draft operating plan will include, but not be limited to, the amount of Diversion Rights water that Cascade expects to receive pursuant to this Agreement in each week during the next Operating Year.

13.2 Scheduling Delivery of Wholesale Water within an Operating Year

13.2.1 Prior to 10:00 A.M. on any Thursday during each Operating Year, Cascade may submit to Tacoma, in the manner and in the form established by Tacoma, a schedule for wholesale water deliveries for the following seven (7) days. Such schedule shall contain at a minimum a uniform rate of water deliveries for each day of the schedule, and shall take effect on the day following the Thursday the schedule is submitted. Schedules so submitted shall remain in effect until replaced by a subsequent schedule submitted in accordance with this subsection 13.2.1. Tacoma shall take all reasonable actions required to ensure that the amount of wholesale water scheduled by Cascade is available to it.

13.2.2 Tacoma may revise schedules submitted pursuant to subsection 13.2.1, if and to the extent any such schedule calls for deliveries that are in excess of Cascade's rights under this Agreement or is inconsistent with Project operating constraints. Tacoma shall notify Cascade if its schedule is revised pursuant to this subsection 13.2.2. In the event that a change in circumstances necessitates a change to a schedule then in effect, Cascade may request a change to such schedule, and Tacoma shall take all reasonable actions to accommodate such schedule change.

13.3 As Project Operator, Tacoma reserves the right to revise schedules submitted by Cascade as Tacoma determines may be necessary to comply with permits, authorizations, regulations or orders applicable to the Project, or to deal with Uncontrollable Forces that affect the ability to fulfill such schedules. Tacoma will provide Cascade with as much notice as is practicable under the circumstances of any such revision, and Tacoma shall treat Cascade the same as other wholesale customers in making such revisions.

14. METER OWNERSHIP, CALIBRATION AND MAINTENANCE

14.1 The cost of installing the initial and any replacement delivery meter shall be borne by Cascade.

14.2 Tacoma shall be responsible for the calibration and testing of the delivery meter. No less frequently than once each year the delivery meter shall be tested for accuracy, and the results of such testing shall be made available to Cascade at no charge. The costs of the annual delivery meter test shall be billed to Cascade. In addition to the annual meter test, Cascade may test the delivery meter at any reasonable time and at Cascade's expense. The results of any additional delivery meter test shall be made available to Tacoma at no charge.

14.3 Tacoma shall establish the size and the flow range within which the delivery meter must operate. Should Tacoma determine that the delivery meter is operating outside the flow range so established, it shall notify Cascade in writing of such operation, and the size of the replacement meter needed to operate within the flow range. Tacoma shall provide Cascade an opportunity to discuss the problem with the existing delivery meter, and the need for the proposed replacement delivery meter. After providing such written notice, Tacoma may replace the faulty delivery meter and bill Cascade for the costs of procuring and installing such meter, and Cascade shall be obligated to pay such bill.

14.4 The Flow Control Valve for Cascade shall be owned by and shall be under the control of Cascade. Cascade shall be responsible for the operation and control of its Flow Control Valve. Upon reasonable notice to Cascade, Tacoma shall have the right to enter the meter and/or valve vault or vaults of Cascade for any reason related to this Agreement or the Project Agreement.

14.5 Tacoma shall have access to, but not control of, the control signals from each meter station, and access to the vault in which the delivery meter is located. The costs of equipment necessary to receive any such control signals shall be borne by Cascade.

15. WHOLESALE WATER DELIVERIES IN EXCESS OF SCHEDULES

15.1 Nothing in this Agreement shall prohibit Cascade from requesting, or Tacoma from agreeing to deliver, permanent wholesale water in excess of the limits set forth in section 6.

15.1.1 Such agreed upon deliveries will not be subject to the Surcharge Rate.

15.1.2 Unless otherwise agreed to by the Parties, such deliveries shall be priced in accordance with section 9.1; provided that additional permanent water shall be subject to a full SDC offset by a credit in the amount of any Capacity Reservation Fee paid for water supplied pursuant to section 6.2 converted to permanent supply.

15.2 Should Tacoma determine that Cascade is receiving deliveries of wholesale water at the Wholesale Service Connection in excess of its scheduled amounts, Tacoma shall notify Cascade of the excess deliveries, and Cascade shall promptly take the steps necessary to reduce its deliveries to amounts equal to its scheduled amounts, or to revise its schedules to reflect the level of deliveries it is receiving.

15.3 If Cascade has not taken action to revise its schedules or to reduce its deliveries to a level equal to its scheduled amounts within twenty-four hours of receiving notice from Tacoma pursuant to subsection 15.2, Tacoma may take any action it deems necessary to reduce the deliveries to a level equal to Cascade's scheduled amounts, and charge Cascade the Surcharge Rate for any excess deliveries made after the expiration of the twenty-four hour notice period.

16. SHARING WATER SHORTAGES

In the event there is a water shortage or drought that requires Tacoma to institute a water rationing or water use restriction program for Tacoma's retail customers, Tacoma will institute reductions to deliveries of wholesale water made pursuant to this Agreement that are comparable in magnitude and duration to those Tacoma imposes on its retail customers.

17. TITLE AND RISK OF LOSS

Title and risk of loss to wholesale water delivered by Tacoma to Cascade pursuant to section 6 of this Agreement will pass from Tacoma to Cascade when such wholesale water reaches that portion of the Interconnection Facilities owned by Cascade.

18. REGULATORY COMPLIANCE

Cascade understands and agrees that the operation of the Project, and the water available from the Diversion Rights is subject to permits, authorization, and the jurisdiction of regulatory agencies and courts with the authority to issue orders and regulations regarding the Project and the Diversion Rights water. Cascade understands and agrees that Tacoma as Project Operator must comply with all such valid permits, authorizations, orders and regulations, and that such valid permits, authorizations, orders and regulations may affect the ability of Tacoma to fulfill its wholesale water deliveries under this Agreement.

19. NO RIGHT OR CLAIM TO WATER

Cascade and each of its members agrees that they have only a contract right to wholesale water as set forth in section 6 of this Agreement, and further agrees they have no claim or right to a supply of water from Tacoma upon the expiration or termination of this Agreement on any basis whatsoever.

20. AUDITS AND ACCESS TO RECORDS

Upon reasonable prior notice to Tacoma, Cascade, or any consultant of Cascade, shall be given access during normal business hours to the books, records and accounts related to this Agreement in the possession of Tacoma at the location where such books, records and accounts are located. Tacoma shall not be obligated to collate, organize or analyze the information sought by Cascade or by Cascade's consultant. Cascade shall pay Tacoma its established rate for any documents reproduced for Cascade or its consultant.

21. DISPUTE RESOLUTION

21.1 Any and all disputes arising under this Agreement shall be resolved pursuant to this section 21.

21.2 The Parties shall make good faith efforts to resolve by informal discussion any dispute arising under this Agreement.

21.3 If at any time during the good faith efforts to resolve any dispute arising under this Agreement either of the Parties determines that such informal discussions will not result in a resolution of the issue(s) in dispute, such Party may initiate the dispute resolution process in accordance with Exhibit C. Any such dispute resolution process shall be conducted pursuant to the provisions of Exhibit C.

21.4 In the event that a Party moves to set aside or modify the final report of the referee in court, and that Party is not the prevailing party in the final disposition of the dispute through the judicial proceedings (including any appeals), then the moving Party will be obligated to pay all of the costs incurred by the other Party in the dispute resolution process (including any judicial proceedings), which costs shall include, but not be limited, to attorneys fees.

21.5 Pending resolution of any dispute, the Parties shall continue to fulfill their respective duties under this Agreement.

22. UNCONTROLLABLE FORCES

22.1 A Party shall not be in breach of this Agreement as a result of such Party's failure to perform its obligations under this Agreement, other than the obligation to pay money when due and owing, when such failure is due to an Uncontrollable Force, to the extent that such Party, despite the exercise of due diligence, is unable to remove such Uncontrollable Force. Nothing in this Agreement shall be construed to require any Party to prevent or settle any strike or labor dispute in order to obtain relief under this section 22.

22.2 Any Party subject to an Uncontrollable Force that may impair its performance under this Agreement shall notify the other Party as soon as practicable. Any

Party subject to an Uncontrollable Force shall be excused from performance under this Agreement only for the duration of and to the extent of the Uncontrollable Force. Any Party subject to an Uncontrollable Force shall take all reasonable actions to remove the Uncontrollable Force. Neither the occurrence of an Uncontrollable Force nor the provisions of this section 22 shall relieve any Party of its obligation to pay money when due under the terms of this Agreement.

22.3 Uncontrollable Force shall not relieve Cascade of its payment obligations hereunder, except that Cascade shall not be required to make payments pursuant to section 9.1 for more than 6 months after water deliveries from Tacoma cease, and Cascade's obligation to make payment under section 9.1 shall not be reinstated until monthly water deliveries from Tacoma re-commence.

23. NOTICES

23.1 All notices, requests, demands, waivers, consents and other communications required hereunder shall be in writing, and shall be delivered by one or more of the following means: (i) in person, (ii) by overnight delivery service, (iii) by first class mail with postage prepaid, (iv) by facsimile providing confirmation of completed transmission, or (v) by such other means as may be approved by the Parties. Service of any such notice, request, demand, waiver, consent or other communication shall be deemed to have been duly given and to have become effective upon receipt.

23.2 Any and all notices, demands, waivers, consents and other communications shall be forwarded to each of the Parties at the following addresses:

To Tacoma: Water Superintendent
Tacoma Water
P. O. Box 11007
Tacoma, WA 98411

To Cascade: Manager
Cascade Water Alliance
1400 112th Avenue S.E. – Suite 220
Bellevue, WA 98004

23.3 Either Party may change the address to which notices shall be sent by giving notice of such change in accordance with subsection 23.1.

24. DEFAULT OF OBLIGATION

24.1 If Cascade fails to make any payment in full when due under this Agreement for a period of ninety (90) days or more after the Due Date, Tacoma shall make written demand upon Cascade to make payment in full within ten (10) days of the

date of such written demand. If the failure to pay is not cured with the ten (10) day time period, Cascade shall be deemed to be in default.

24.2 In addition to the remedies provided in section 10, if Cascade has been in default of payment for a period of sixty (60) days or more, then Tacoma may terminate this Agreement by providing Cascade with written notice not less than six (6) months prior to the date of termination set forth in such written notice.

25. REPRESENTATIONS AND WARRANTIES

25.1 The Parties hereby represent and warrant to one another the following:

25.1.1 Each Party is duly authorized and validly existing under the laws of, and is authorized to exercise it powers, rights and privileges and is in good standing in, the State of Washington, and has full power and authority to carry on its business as presently conducted and execute this Agreement and perform the transactions on its part contemplated by this Agreement.

25.1.2 The execution, delivery and performance of this Agreement, and the consummation of the transactions contemplated hereby have been duly authorized by the appropriate board or council, and no other act or proceeding on the part of any Party is necessary to authorize this Agreement, or the transactions contemplated hereby.

25.1.3 The execution, delivery and performance by each of the Parties of this Agreement does not: (a) contravene any law; or (b) conflict with or result in a breach of or default under any material agreement or instrument to which any Party is a party or by which it is bound.

25.1.4 There are no actions, suits, claims or proceedings pending or, to the best of each Party's knowledge, threatened against either Party that is likely to impair the consummation or the transactions contemplated hereby.

25.1.5 This Agreement, when executed and delivered, will constitute a valid and binding obligation of each Party, and will be enforceable against each such Party in accordance with its terms.

26. ASSIGNMENT AND OTHER ARRANGEMENTS

The rights and obligations of this Agreement may not be sold, assigned or otherwise transferred in whole or in part by Cascade or Tacoma without the prior written consent of the other, which consent shall not be unreasonably withheld; provided that should Cascade dissolve, then Tacoma will extend to any individual member of Cascade,

or any combination thereof, the right to assume Cascade's rights and obligations under this Agreement.

27. WAIVERS

Except as otherwise provided herein or as agreed to by the Parties, no provision of this Agreement may be waived except as documented or confirmed in writing. Any waiver at any time by a Party of its rights with respect to a default under this Agreement or with any other matter arising in connection therewith, shall not be deemed a waiver with respect to any subsequent default or matter. Either Party may waive any notice or agree to accept a shorter notice than specified in this Agreement. Such waiver of notice or acceptance of shorter notice by a Party at any time regarding a notice shall not be considered a waiver with respect to any subsequent notice required by this Agreement.

28. AMENDMENTS

No change, amendment or modification of any provision of this Agreement shall be valid unless set forth in a written amendment to this Agreement signed by the Parties.

29. ENTIRE AGREEMENT

This Agreement sets forth the entire agreement of the Parties, and supersedes any and all prior agreements with respect to the subject matter of this Agreement. The rights and obligations of the Parties hereunder shall be subject to and shall be governed by this Agreement.

30. INTERPRETATION OF THE AGREEMENT

The Parties participated in the drafting of this Agreement. In interpreting this Agreement, no inference shall be drawn against either Party as the drafter of this Agreement. The headings used herein are for convenience of reference only, and shall not affect the meaning or interpretation of this Agreement.

31. GOVERNING LAW AND VENUE

This Agreement shall be governed by and construed in accordance with the laws of the State of Washington (regardless of the laws that might otherwise govern under applicable principles of conflicts of law of such state). Except in respect of a lawsuit or judicial action or proceeding commenced by a third party in another jurisdiction, the Parties (i) agree that any lawsuit, judicial action or proceeding arising out of or relating to this Agreement must be heard in the Superior Court of the State of Washington, in and for the County of Snohomish or Thurston, or the United States District Court for the Western District of Washington, (ii) waive any objection to the laying of venue of any such suit, action or proceeding, (iii) irrevocably submit to the jurisdiction of any such

court in any such lawsuit or judicial action or proceeding, and (iv) consent to service of process by mail in respect to any such lawsuit or judicial action or proceeding.

32. DUTY OF GOOD FAITH

The Parties agree that in taking actions or making determinations required or provided for under this Agreement, each Party shall act in fairness and in good faith.

33. COUNTERPARTS

This Agreement may be executed in one or more counterparts, each of which shall be deemed an original, but all of which together shall constitute one and the same instrument.

IN WITNESS WHEREOF, the Parties have duly executed this Agreement on the date first above written.

City of Tacoma
Department of Public Utilities

By: _____

Title: Director of Utilities

Approved as form:

_____
Chief Assistant City Attorney

Cascade Water Alliance:

By: _____

Title: Chair

Approved as form:

_____

CONCEPTUAL WHOLESALE SERVICE CONNECTION TO CASCADE WATER ALLIANCE

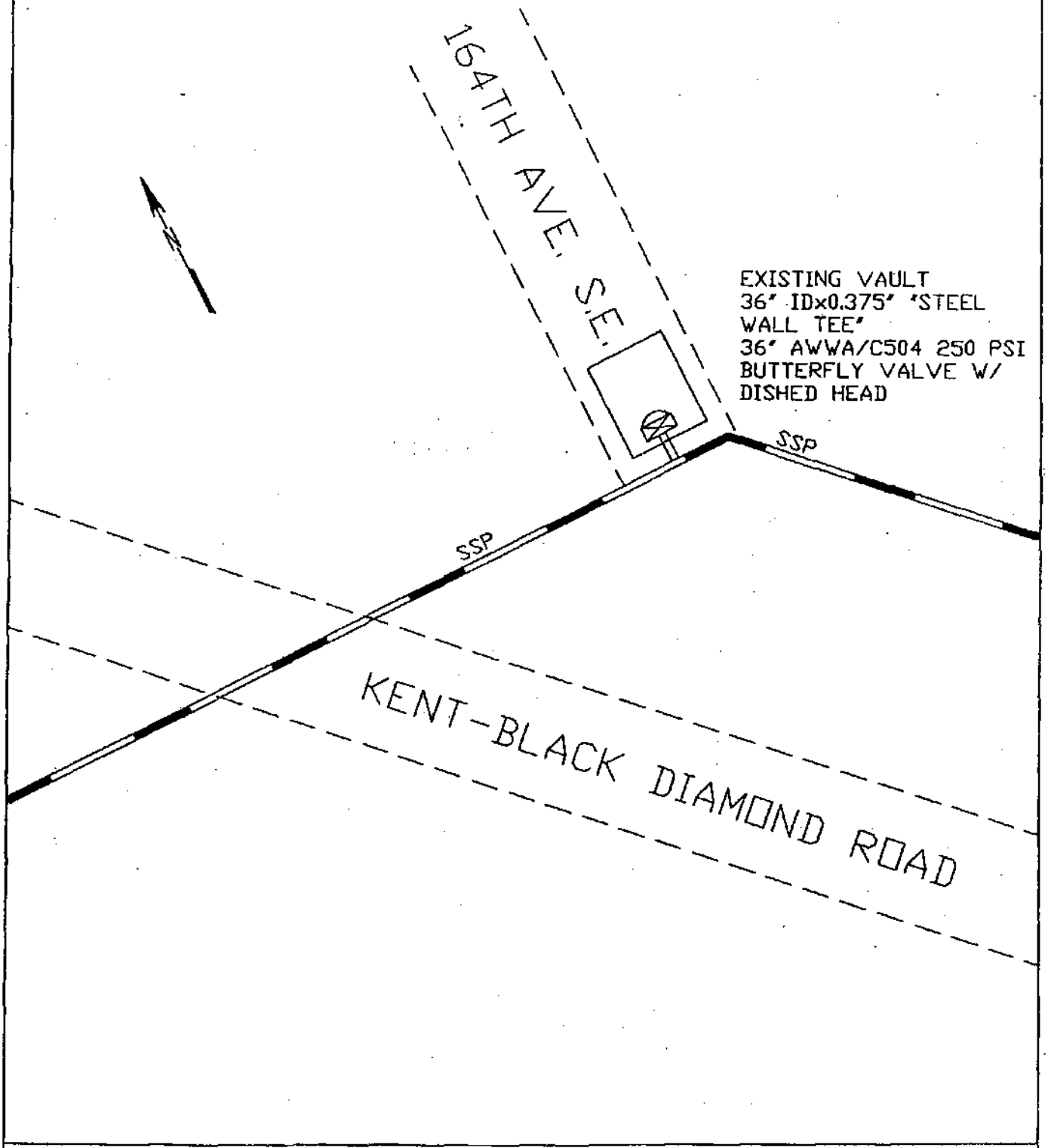

DEPARTMENT OF PUBLIC UTILITIES — TACOMA WATER

Date 9/30/05	Project SSP	W.O.	EXHIBIT 'A'
Design PML Drawn SRL Digitize SRL Check	MANAGER		SCALE N.T.S. DRAWING

SAMPLE WEEKLY OPERATIONS REPORT
Exhibit 'B'

SSP Weekly & AM Operations Report — WEEK OF 12/26/2006 TO 1/1/2006

		Monday 29	Tuesday 30	Wednesday 31	Thursday 1	Friday 2	Saturday 3	Sunday 4
INSTANTANEOUS SOURCE DATA								
Howard Hanson Reservoir	-FEET							
Green River at Palmer	-CFS							
Limit at Palmer	-CFS							
Green River at Auburn	-CFS							
Limit at Auburn	-CFS							
Reservoir Inflow	-CFS							
Available 2nd Water Right Diversion	-MGD							
24 HOUR SOURCE DATA								
TOTAL DIVERSION	-MG							
1ST DIVERSION								
2ND DIVERSION								
HEADWORKS FLOW METER, P-1	-MG							
HEADWORKS FLOW METER, SSP	-MG							
NF WELLS	-MG							
WATER QUALITY DATA (P5 at Headworks)								
TURBIDITY (Max.) RIVER	-NTU							
TURBIDITY (Max.) FINISHED WATER	-NTU							
WATER TEMP. (Min.)	-F							
FLUORIDE (Ave.)	-mg/L							
CL RESIDUAL (Ave.)	-PPM							
UVT	%							
PH (Ave.)								
PARTICIPANT DELIVERY (previous day)								
TACOMA METER TOTAL	-MG							
TACOMA ADJUSTED TOTAL	-MG							
SW 356TH & 15 AVE SW	-MG							
WHOLESALE CUSTOMER METERS	-MG							
CASCADE WATER ALLIANCE	-MG							
KENT METER TOTAL	-MG							
KENT ADJUSTED TOTAL	-MG							
217th Ave SE 288th ST	-MG							
124TH AVE SE & SE 296TH ST	-MG							
120TH AVE SE & SE 296TH ST	-MG							
COVINGTON WD METER TOTAL	-MG							
COVINGTON WD ADJUSTED TOTAL	-MG							
22048 SE 288th St	-MG							
168TH AVE SE & SE 304TH ST	-MG							
148TH AVE SE & SE 286TH ST	-MG							
LAKEHAVEN UD METER TOTAL	-MG							
LAKEHAVEN UD ADJUSTED TOTAL	-MG							
44th AVE. S. & 313th SST	-MG							
1ST WAY S & S 332ND ST	-MG							
SW 356TH ST & 15TH AVE SW	-MG							
TOTAL OF ALL DELIVERY METERS	-MG							
DIFFERENCE FROM SSP METER	-MG							
% OF TOTAL								
TACOMA 2nd Div SHARE	-MG							
TACOMA O&M SHARE	-MG							
KENT 2nd div / O&M SHARE	-MG							
COVINGTON WD 2nd div / O&M SHAR	-MG							
LAKEHAVEN UD 2nd div / O&M SHAR	-MG							
PARTICIPANT SCHEDULES (previous day)								
TACOMA PROJECT	-MG							
TACOMA 1ST DIV	-MG							
KENT PROJECT	-MG							
KENT 1ST DIV	-MG							
COVINGTON WD PROJECT	-MG							
COVINGTON WD 1ST DIV	-MG							
LAKEHAVEN UD PROJECT	-MG							
LAKEHAVEN UD 1ST DIV	-MG							
SCHEDULE DEVIATIONS (previous day)								
TACOMA	-MG							
KENT	-MG							
COVINGTON WD	-MG							
LAKEHAVEN UD	-MG							

Exhibit C – Dispute Resolution Procedures

The following procedures shall govern the resolution of any dispute arising under the Agreement between the Parties that cannot be resolved by good-faith negotiations between the Parties, unless the Parties mutually agree to use different procedures to resolve a specific dispute by executing a document setting forth such different procedures. The Parties agree that these dispute resolution procedures are intended to be used in conjunction with and governed by R.C.W 4.48, and both Parties hereby waive their right to a trial by jury for any dispute arising under this Agreement.

1. The Party that believes that continued good-faith negotiations will not produce a resolution of the issue(s) that is the subject of such negotiations will notify the other Party in writing that they are invoking the dispute resolution procedures of this Exhibit C.

2. Within twenty (20) days of the date of such notice invoking the dispute resolution procedures of this Exhibit C, the Parties shall meet and select an individual to recommend to the court as referee of the dispute resolution process in accordance with R.C.W. 4.48.020. The Parties shall select an individual who is qualified as a juror as provided by statute, competent as a juror between the Parties, a duly admitted and practicing attorney, and has experience presiding over civil litigation of contract disputes. The Parties will use the following procedure to select the recommended referee:

   2.1 Each Party will make a list of three individuals that are qualified pursuant to section 2 to serve as referee and exchange such list with the other Party. If the Parties agree upon a person from either list, or if both Parties list the same person, that person will be the recommended referee.

   2.2 If the Parties are unable to agree upon a referee after exchanging their respective lists, they will make a joint list setting forth all six candidates from the two lists.

3. Upon the selection of the recommended referee, or the creation of the joint list pursuant subsection 2.2, the Party that invoked the dispute resolution procedures shall file a complaint in the superior court of the appropriate county as set forth in section 31 of the Agreement, setting forth the issues(s) in dispute, and the other Party shall file an answer to such complaint. Not later than twenty (20) days after the filing of the answer, the Parties shall jointly file a motion, with the Agreement (including Exhibit C) attached, with the court requesting an order of reference that:

   3.1 Directs that the issue(s) raised by the complaint and answer be resolved pursuant to R.C.W. 4.48 by reference to a referee;

3.2 Appoints pursuant to R.C.W. 4.48.020 either the recommended referee selected by the Parties pursuant to 2.1, or a single referee from the joint list prepared pursuant to subsection 2.2; and

3.3 Directs the referee conduct the proceeding in accordance with the procedures set out in sections 4-10 of this Exhibit C.

4. In accordance with R.C.W 4.48.060, the Parties hereby waive their rights to discovery and cross-examination, and direct that the proceeding be conducted in the same manner as a motion for summary judgment as follows:

   4.1 The Parties shall present their respective positions by written briefs and affidavits, and without testimonial evidence or cross-examination;

   4.2 Oral argument will be conducted before the referee; and

   4.3 The burdens of proof and persuasion that pertain in a civil trial shall apply, rather than those that apply to motions for summary judgment.

5. After appointment of the referee, the Parties shall endeavor in good faith toprepare for the referee a joint statement of facts and the questions to be decided in the proceeding. In the absence of an agreed to joint statement of facts and questions to be decided, each Party may include its own statement of facts and questions to be decided in its initial brief.

6. Within ninety (90) days after the submission of the joint statement of facts and questions to be decided, or within ninety (90) days after the appointment of the referee if the Parties cannot agree to a joint submission of facts and questions to be decided, each Party shall submit to the referee a one page statement of the proposed resolution and/or award it seeks for each of the issues in dispute, and its initial brief. The statement and initial brief (excluding any attached affidavits or evidentiary documents) shall not exceed fifty (50) 8 ½ x 11" double spaced pages with 1 ½ inch margins, number 12 point type face. The statement and initial brief shall be filed simultaneously by e-mail and regular mail with the referee and opposing Party.

7. Within thirty (30) days after the date the Parties filed their initial briefs, the Parties shall file their respective reply briefs with the referee and the opposing Party. The reply briefs (excluding any attached affidavits or evidentiary documents) shall not exceed twenty-five (25) 8 ½ x 11" double spaced pages with 1 ½ inch margins, number 12 point type face. The reply briefs shall be filed simultaneously by e-mail and regular mail with the referee and opposing Party.

8. After the reply briefs have been filed, if the referee deems that additional responses are needed, then the referee may request the Parties file a

supplemental brief only as to those specific matters or questions raised by the referee. Such supplemental briefs shall be limited to fifteen (15) 8 ½ x 11" double spaced pages with 1 ½ inch margins, number 12 point type face, and filed at such time as requested by the referee. Any such supplemental briefs shall be filed simultaneously by e-mail and regular mail upon the referee and opposing Party.

9. When all briefs have been filed, the referee will schedule oral argument on the issue(s) in dispute.

10. After the completion of oral argument, the referee will prepare his/her proposed report in accordance with R.C.W. 4.48.70 and shall provide a copy of the proposed report to the Parties, who shall have the right to suggest changes and modifications to the proposed report, all in accordance with R.C.W. 4.48.110. The referee will file the final report with the court within twenty (20) days of the completion of the process under R.C.W.4.48.110.

11. Either Party may move the court to modify or set aside, in whole or in part, the final report of the referee. If the court modifies or sets aside, in whole or in part, the final report of the referee and makes another reference, then this Exhibit C shall also apply to such reference.

12. Except as provided in section 21 of the Agreement, each Party shall be responsible for its own costs of the dispute resolution process (including any judicial proceedings), and the Parties shall each pay one-half of the other costs of the dispute resolution proceeding, including the fees of the referee. The fees of the referee shall be established in accordance with R.C.W. 4.48.100.

APPENDIX D

Interlocal Operation and Maintenance Agreement

ORIGINAL

FILED NO. 24972
CITY OF BELLEVUE
DATE 10/13/97
M. Reel
CITY CLERK'S OFFICE

INTERLOCAL OPERATION AND MAINTENANCE AGREEMENT

This Agreement is made by and between the Cities of Kirkland ("Kirkland"), Redmond, ("Redmond"), and Bellevue, ("Bellevue"), municipal corporations in King County, Washington, collectively referred to as the "Cities" for the purposes set forth herein.

RECITALS

A. The Cities have previously approved an Assumption Agreement whereby the Cities have assumed the assets, liabilities and operations of the Rose Hill Water District, a municipal corporation in King County, Washington ("District").

B. Prior to the assumption of the District by the Cities, Kirkland and Bellevue maintained jointly owned water facilities with the District pursuant to various interlocal agreements providing for such. In addition, Redmond entered into certain interlocal agreements with the District regarding water system operation and water supply. Upon the effective date of the assumption of the District by the Cities, the Cities have assumed ownership and responsibility for the District's water supply facilities within the Cities' respective service areas. However, certain District facilities will continue to be jointly owned and operated by the Cities in accordance with the terms of the Assumption Agreement and their respective undivided ownership interests in such facilities.

C. The purpose of this Agreement is to provide for the respective responsibilities and obligations of the Cities to provide for the ongoing operation and maintenance of water supply facilities ("joint facilities") within the common service areas as further described in this Agreement.

D. The Cities are authorized by Chapter 39.34 RCW, the Interlocal Cooperation Act, to enter into interlocal agreements for the joint action referenced herein.

NOW, THEREFORE, in consideration of the terms and conditions contained herein, the parties agree as follows:

1. Modification of Assumption Agreement. Exhibit C to the Assumption Agreement describes the jointly owned facilities and the distribution of ownership believed appropriate at the time the Assumption Agreement was executed. After additional evaluation it has been determined that modifications to the designation of jointly owned facilities and the distribution of ownership are necessary. Therefore, Attachment "A" to this Interlocal Operation and Maintenance Agreement supersedes Exhibit C to the Assumption Agreement.

2. Service Areas. Each City shall be the direct provider of water service within its service area. For purposes of this Agreement, "service area" means that portion of the City's incorporated area that overlays a portion of the previous District area together with adjacent unincorporated areas as more generally described as follows:

a. The service area for Bellevue shall be that area existing within the Bellevue city limits as of the effective date of this Agreement.

b. The service area for Kirkland shall be that area existing within the Kirkland city limits as of the effective date of this Agreement and any District service areas that are in unincorporated King County lying west of 132nd Avenue NE and its northerly extension.

c. The service area for Redmond shall be that area existing within the Redmond city limits as of the effective date of this Agreement and any District service areas that are in unincorporated King County lying east of 132nd Avenue NE and its northerly extension.

d. Any unincorporated area previously within the Rose Hill Water District Boundaries which is subsequently annexed into a City shall remain in or be transferred to the service area of the annexing City.

3. Meter Areas. Within each City's service area there are hereby established "direct read meter areas" and "master meter areas."

a. Direct read meter areas are within the previous District service area between the Seattle meters in place as of the effective date of the Assumption Agreement and the points at which City master meters exist or are installed in the future. Direct read meter areas indicate retail water usage within that area.

b. Master meter areas are those areas previously served by the District outside of the previous District service area boundary and downstream from City master meters.

4. City Master Meters are those existing or future meters that meter water to master meter areas.

5. Water Supply.

a. Kirkland shall purchase water from The City of Seattle for supply to the service areas of Kirkland, Redmond and Bellevue and shall sell water to Redmond and Bellevue.

b. Where Bellevue's direct service area lies within a portion of Redmond's master meter area, Redmond shall sell water to Bellevue to serve such area.

c. In the event The City of Seattle chooses to modify the purveyor contract with Kirkland to limit the quantity of supply to Kirkland, Kirkland shall continue to supply the service areas of Redmond and Bellevue. The quantity to be supplied to Redmond and Bellevue shall then be the amount of supply allocated to Kirkland from Seattle divided amongst the three cities in proportion to the percent ownership in the joint facilities as stated in Section 4 of Attachment A. Bellevue customers served by Redmond or Kirkland shall continue to receive their allocation based upon the average of the demand for the previous three years limited in the same proportion as are Kirkland and Redmond customers. Kirkland shall not be obligated to supply water to Redmond and Bellevue in excess of the respective City's proportionate amount supplied by The City of Seattle.

d. In the event Seattle chooses to not renew its purveyor contract with Kirkland, Kirkland shall not be obligated to supply water to Redmond and Bellevue. In the event that the supply from the City of Seattle is limited or eliminated by Seattle, the Joint Board shall evaluate and make recommendations to the Councils of the three cities on the alternatives to be considered and pursued for additional or alternate source(s) of supply.

e. In the event a regional water supply authority or water supply other than The City of Seattle is formed, the Councils of Redmond and Kirkland shall determine if Kirkland, or Kirkland and Redmond should jointly contract for supply from the new authority and whether to amend or terminate the City of Seattle contract ("Purveyor Contract") and/or this Agreement.

6. Water Usage. The water usage within the direct read meter areas shall be referred to as "retail water" and the water usage through master meters shall be referred to as "wholesale water." The water loss within the direct read meter areas to uses including but not limited to flushing, construction, leakage and firefighting shall be referred to as "unaccounted water." The usage of each City shall be computed for retail water, wholesale water and unaccounted water separately. Unaccounted water usage shall be determined by subtracting the wholesale water usage and retail water usage for each of the three Cities from the quantity of water purchased from The City of Seattle. The unaccounted water shall then be allocated to each of the Cities in proportion to the amount of retail water used within each City's direct read meter areas.

7. Operation and Maintenance. Kirkland and Redmond shall be jointly responsible for performing the operation and maintenance of any facilities jointly owned by the Cities. Redmond shall operate, maintain and repair any jointly owned water lines within the Redmond service area. Kirkland shall operate, maintain and repair all other jointly owned facilities.

Kirkland, Redmond and Bellevue each agree to not operate their facilities which are not joint-use facilities in any way which would be detrimental to the operations of any city. If a situation arises between the cities, the Joint Board shall determine how the water system shall be operated and maintained to the benefit of all cities.

8. Establishment of a Joint Board. The Cities hereby establish a Joint Board which shall provide oversight for the planning and performance of operations, maintenance, extraordinary maintenance, repair, and replacement of the joint facilities. The Joint Board shall be authorized to negotiate and execute leases of joint facilities. The Joint Board shall meet at least annually and shall be comprised of the Public Works Director (or equivalent department head) of each City or his/her designee. Should the Public Works Director or equivalent department head of any city appoint an alternate representative to the Joint Board, such appointment shall be in writing to the other cities by the Public Works Director or equivalent department head.

A quorum at any meeting of the Joint Board shall consist of a simple majority of the Joint Board's membership. All Joint Board members shall have one equal vote and, except as provided otherwise herein, all actions required to be authorized by vote of the Joint Board shall require approval of a majority of those present; provided however, that if the proposed action directly pertains to the operations, maintenance, extraordinary maintenance, repair or replacement of a particular jointly-owned facility, then the Joint Board action shall be by weighted majority vote based on the percentage of ownership interest of each City in the particular jointly owned facility to be operated, maintained, repaired or replaced.

9. Water Supply, Operation and Maintenance Costs. Costs for water supply and water system operation, maintenance, extraordinary maintenance, repair and replacement as further defined herein, shall be shared by the Cities and shall consist of the following components:

a. Water Charges: The water rates for wholesale water, retail water and unaccounted water shall be the commodity rates charged by the City of Seattle for the type of water (old, new) and for the period consumed (summer, winter). This rate shall also include but not be limited to emergency surcharges and applicable commodity or other charges or surcharges established by the City of Seattle.

b. Meter Charges: The meter charges for the City of Seattle meters shall initially be allocated to each City as follows:

Kirkland:	65%
Redmond:	35%
Bellevue:	0%

The percentage allocation of meter charges to the Cities shall be reviewed annually by the Joint Board on or about January 1 and shall be adjusted, if deemed necessary by the Joint Board, based upon the total quantity of water usage by each City in proportion to the total quantity of water purchased through the Seattle meters for the previous year.

There shall be no charges for any City-operated master meter. Costs associated with the operation and maintenance of master meters shall be borne by the City served by the master meter. City operated master meters will be tested and calibrated in even numbered years by the City served by the master meter.

c. Operation Charges. Kirkland shall assess Redmond and Bellevue for their proportionate shares of labor and costs incurred in the daily operation of the joint facilities based on water usage. Operation of the joint facilities shall include but not be limited to the operation of the instrumentation/control systems for such joint facilities, and for controlling the rate of flow from the Seattle supply facilities. The operation charges shall be actual expenses incurred including overhead. These expenses shall be subject to periodic review by the Joint Board at least every two (2) years.

d. Maintenance Charges: Kirkland shall assess Redmond and Bellevue, and Redmond shall assess Kirkland and Bellevue, based on their respective ownership interests in the joint facilities, for providing routine maintenance of and repairs to the joint facilities for which Kirkland or Redmond is responsible based upon service area location. These maintenance and repair activities include but are not limited to maintenance and repair of the instrumentation/control system for the joint facilities, maintenance and repair of the reservoirs, jointly owned pipelines, pumping facilities, reservoir control facilities, landscape maintenance and groundskeeping for the various joint facilities, and other activities of a similar nature. Redmond shall make similar assessments for routine maintenance of joint pipeline facilities within its service area. The Cities' ownership interests in the joint facilities are identified in Attachment A to this Agreement.

The maintenance charges from Kirkland to Redmond and Bellevue shall be actual expenses incurred including overhead. The maintenance charges from Redmond to Kirkland and Bellevue shall be actual expenses incurred including overhead. These expenses shall be subject to periodic review by the Joint Board at least every two (2) years.

e. Administration Charges: Kirkland shall assess Redmond and Bellevue based on water usage for their proportionate shares of the administrative costs incurred by Kirkland to provide administrative activities and duties for this Agreement and operation and maintenance of the joint facilities for which Kirkland is responsible. These administrative activities include but are not limited to coordination with the City of Seattle, financial and accounting services, record keeping, and billing.

The administrative charges shall be actual costs incurred including overhead. These charges shall be subject to periodic review by the Joint Board at least every two (2) years.

f. Insurance: The Joint Board shall determine the nature and amount of hazard and liability insurance to be provided for the joint facilities and their operation. Each City may but shall not be required to maintain casualty insurance for all risks of direct physical loss from external cause on the jointly-owned facilities to the extent of their interest at the current replacement cost of such improvements, which costs shall be updated annually. The Cities may agree that one of the Cities may obtain such insurance

naming the other Cities as named insureds and for the sharing of the costs of such insurance based upon the percentage of ownership of the joint facilities by each respective City.

g. Special Assessments.

1) Special Assessments for Emergency Items. Special assessments shall be made for emergency maintenance, repair, and replacement activities of the joint facilities. Emergency maintenance, repair, or replacement activities shall be defined as maintenance, repair, or replacement of joint use facilities requiring immediate attention and, without such attention, could cause a disruption to water supply or quality. The Joint Board shall have the authority to approve and assess such special assessments based on actual costs of such emergency maintenance, repair, or replacement activities as demonstrated by an accounting of time and materials; provided, however, any such special assessment approved by the Joint Board, to the extent it exceeds ~~$50,000.00~~ $25,000.00 for any City, shall not obligate such City until and unless approved by that City, unless that City delegates by appropriate legislative action the authority to its representative on the Joint Board to approve a larger special assessment on its behalf. This amount may be adjusted every five (5) years by the Joint Board by an amount not to exceed increased costs due to inflation. In calculating such adjustments, the Joint Board may rely on consumer price indices for the Seattle-Metropolitan area and similar locally available indices. Time and materials shall include labor, benefits, overhead, materials, taxes and contract amounts. Each City shall be assessed such special assessment based on its respective ownership interest in the joint facility under emergency maintenance or repair.

Initials

9-29-97

2) Special Assessments for Extraordinary Items. Special assessments may also be made for extraordinary maintenance, repair and replacement activities of the joint facilities or joint capital improvement project for new or existing joint facilities. Extraordinary maintenance, repair and replacement activities may include but are not limited to coating, replacement, and structural repairs of the water storage facilities, and replacement of joint facilities (pipelines, pumps, motors, valves, vaults, supply meters and structures).

3) Destroyed or Damaged Facilities. In the event any of the joint facilities are destroyed or irreparably damaged by any cause, the facility so destroyed or damaged shall be promptly replaced by the Cities and the cost thereof shall be paid in the same proportion as the ownership of the facility. The Cities may, by unanimous agreement, determine that such facilities need not be replaced or reconstructed if the Joint Board finds the facilities are no longer necessary to the efficient provision of water supply.

h. Charges Between Cities. All charges assessed by one City against either of the other Cities for operation, maintenance, administration or special assessment shall include supporting documentation justifying said charges.

i. Demand Metering. Kirkland shall be responsible for demand metering as required in it's Purveyor Contract with the City of Seattle. During the demand metering period of June 1 through August 31, Redmond and Bellevue must notify Kirkland of their planned withdrawal rates by 8:00 a.m. daily to allow Kirkland sufficient time to set flow rates from the Seattle meters. The Joint Board will determine how to distribute the cost of a surcharge between the Cities.

j. Response to Emergencies. Costs of emergency response or repair activities to a joint facility by either City shall be allocated between the Cities based upon the percentage of ownership in the joint facility(s) involved.

10. Water Supply, Operation and Maintenance Payments.

a. Meter Reading. The Cities shall read their master meters and direct read meters as follows:

1) Redmond: Kirkland shall read Redmond's master meters at least monthly. Redmond shall read its direct read meters monthly or bimonthly in accordance with Redmond's policies and procedures. Redmond shall report to Kirkland the retail usage and the meter read dates within thirty (30) days of meter reading.

2) Bellevue: Kirkland shall read Bellevue's master meters at least monthly. Bellevue shall read its direct read meters monthly or bimonthly in accordance with Bellevue policies and procedures. Bellevue shall report to Kirkland the retail usage and meter read dates within thirty (30) days of meter reading.

3) Kirkland: Kirkland shall read its master meters at least monthly and shall read its direct read meters monthly or bimonthly in accordance with Kirkland policies and procedures.

b. Supply and Consumption Reports. Kirkland shall prepare a supply and consumption report for each month of the year within ninety (90) days of the end of each such month. The report shall indicate the total purchased supply, the wholesale usage and retail water usage reported by each City, and the unaccounted water usage calculated for each City. This report shall correlate the total purchased supply and reported usages to actual calendar periods of use as may be determined based on the varying meter read dates and frequency of meter readings. This report shall indicate the type of water used (old, new) and the period of use (summer, winter).

c. Billings and Payments. Kirkland shall invoice Redmond and Bellevue monthly for estimated water usage or any other charges as set forth herein. Estimated water usage shall be established from prior years' actual consumption records for retail water usage. Actual Master meter readings shall be used for the wholesale meter usage. With each monthly supply and consumption report an invoice shall be prepared based on actual usage.

d. Delinquent Payments. All payments between any of the Cities pursuant to the terms of this Agreement shall be made within 45 days of receipt of invoice. Payments not made within 45 days will be subject to 1% (one percent) per month interest charges on the outstanding balance.

11. Seattle Water Purveyor Contract. The parties acknowledge that the District has assigned its water purveyor contract with the City of Seattle to Kirkland pursuant to the Assumption Agreement and that Kirkland is a purveyor of water to Redmond and Bellevue. As set forth in the Assumption Agreement, Kirkland agrees to apportion its purveyor committee weighted votes between Kirkland and Redmond as allowed and provided by the Seattle Purveyors Committee By-laws. Kirkland further agrees to allocate between the Cities the flushing allowance provided for in the water purveyor contract in proportion to the total water used by each city as supplied by Kirkland in the previous year.

The water purveyor contract also provides in section III F therein for a purveyor facilities account. That section provides for identification and compensation for certain facilities that have been allocated to and paid for by the purveyors. Any allocation or credit to Kirkland under the purveyor contract in the event of the application of Section III F shall be reallocated by Kirkland to the three Cities based upon water purchased by each City in those years the allocation is made.

12. Status of Parties. This Agreement shall not be construed to establish a partnership, joint venture or any other legal relationship between the parties hereto except as common owners of the jointly owned facilities.

13. Successors. This agreement and its terms and conditions shall be binding upon the successors and assigns of the parties hereto.

14. Change in Proportion of Use or Ownership. The Cities may agree to adjust the use and/or ownership of the joint facilities identified in this Agreement and exhibits hereto as either a permanent amendment to this Agreement or as a temporary arrangement, and may agree that one party will pay the other party on an agreed basis for such permanent or temporary use of all or part of the other parties' contract share of the joint facilities.

15. Term and Termination. The term of this Agreement shall commence upon approval by the three cities. This Agreement shall remain in effect until terminated by mutual agreement of the three Cities. Upon termination of this Agreement, the disposition of the jointly owned facilities shall be in accordance with the ownership interests identified in Attachment A hereto; and all other property acquired during the life of this Agreement shall be distributed to the contributing City or Cities to the extent of such City's or Cities' contribution(s).

16. Emergencies, Notice and Response. In the event of an emergency condition occurring in the water system within the service areas of any of the Cities which affects the operation of the joint facilities, the City experiencing the emergency condition shall, upon learning of the condition, endeavor to immediately notify the other Cities. The Joint Board shall establish procedures for such notification providing as a minimum, a priority of names and telephone numbers for notification. The parties so notified shall, if requested and to the extent practicable, render emergency assistance to the other party and modify their system operations and control to the extent practicable as reasonably necessary to meet the emergency. In the event of such emergency, the party experiencing the emergency shall reimburse the other parties for the reasonable cost of any assistance provided.

17. Records. Kirkland shall maintain records indicating all operation and maintenance and administrative costs and charges and maintenance schedules for the joint facilities for which Kirkland is responsible and identifying actual maintenance performed.

18. Indemnification. Each City agrees to defend, indemnify, and hold the other Cities harmless from any and all losses, claims, demands, payments, suits, liabilities, or judgments of every nature and description brought or recovered against the other Cities for damages suffered, or alleged to be suffered by persons or property caused by or resulting from the operation or maintenance of the joint facility as described herein, except to the extent such damages resulted from the negligence of the other Cities.

19. Notice and Communications. All notices and other formal communications to be given or any documents to be delivered by any party to any other party shall be delivered in person or mailed by certified mail and addressed to the respective parties at the following addresses:

To Kirkland at: Director of Public Works
City of Kirkland
123 Fifth Avenue
Kirkland, Washington 98033

To Redmond at: Director of Public Works
City of Redmond
15670 NE 85th Street
Redmond, Washington 98052

To Bellevue at: Utility Director
City of Bellevue
PO Box 90012
Bellevue, WA 98009-9012

20. Modification of Agreement. This Agreement may be amended, modified or added to only by written instrument properly signed by all parties hereto.

initials

~~THIS NEXT PARAGRAPH WILL REMAIN HERE, FOR NOW, AS WE MAY PUT IT BACK INTO DOCUMENT.~~

9.29.97

21. Superseding Agreement. Several agreements and contracts have been approved and / or adopted by the District over the years. The following listed agreements and contracts constitute the entire list of agreements and contracts that were known to be in existance at the time of the signing of this Interlocal Operations and Maintenance Agreement.

In the event that this Interlocal Operations and Maintenance Agreement conflicts with the provisions of any other District agreement or contract presently in effect but not listed below, this Interlocal Operations and Maintenance Agreement shall govern. The Joint Board shall be responsible to consider any such agreements and contracts on an individual basis to nullify, modify or amend any such agreements or contracts and shall do so by amendment to this Interlocal Operations and Maintenance Agreement .

The following listed agreements and contracts are hereby null and void in their entirities:

RESOLUTION OF BOARD OF COMMISSIONERS OF ROSE HILL WATER DISTRICT ADOPTING INTERLOCAL GOVERNMENTAL AGREEMENT FOR CONSTRUCTION OF 14.3 MILLION GALLON RESERVOIR. (Resolution No. 737)

RESOLUTION OF THE BOARD OF COMMISSIONERS OF ROSE HILL WATER DISTRICT EXTENDING CONTRACT FOR WATER SALES TO THE CITY OF REDMOND. (Resolution No. 679)

A RESOLUTION OF THE BOARD OF COMMISSIONERS OF ROSE HILL WATER AND SEWER DISTRICT APPROVING AGREEMENT WITH CITY OF REDMOND FOR WATER DISTRIBUTION SYSTEM. (Resolution No. 648)

RESOLUTION OF THE BOARD OF COMMISSIONERS OF ROSE HILL WATER AND SEWER DISTRICT APPROVING CONTRACT FOR SALE OF WATER TO THE CITY OF REDMOND. (Resolution No. 547)

RESOLUTION OF THE BOARD OF COMMISSIONERS OF KING COUNTY WATER DISTRICT NO. 81 APPROVING AMENDMENT TO JOINT WATER STORAGE AND DISTRIBUTION PROJECT AGREEMENTS. (Resolution No. 457)

A RESOLUTION OF THE BOARD OF COMMISSIONERS OF KING COUNTY WATER DISTRICT NO. 81 REQUESTING THE ESTABLISHMENT OF A JOINT MAINTENANCE FUND. (Resolution No. 257)

A RESOLUTION OF THE BOARD OF COMMISSIONERS OF KING COUNTY WATER DISTRICT NO. 81 ACCEPTING JOINT FACILITIES RESERVOIR CONSTRUCTION. (Resolution No. 250)

A RESOLUTION OF THE BOARD OF COMMISSIONERS OF KING COUNTY WATER DISTRICT NO. 81 APPROVING THE EXECUTION OF A CONTRACT FOR TELEMETERING SERVICE FOR THE JOINT FACILITIES PROJECT. (Resolution No. 248)

A RESOLUTION OF THE BOARD OF COMMISSIONERS OF KING COUNTY WATER DISTRICT NO. 81 ACCEPTING JOINT FACILITIES WATER MAIN CONSTRUCTION. (Resolution No. 246)

A RESOLUTION OF THE BOARD OF COMMISSIONERS OF KING COUNTY WATER DISTRICT NO. 81 APPROVING AN AGREEMENT FOR JOINT CONSTRUCTION OF WATER STORAGE AND DISTRIBUTION FACILITIES. (Resolution No. 233)

A RESOLUTION OF THE BOARD OF COMMISSIONERS OF KING COUNTY WATER DISTRICT NO. 81 APPROVING AN AGREEMENT FOR EXCHANGE OF WATER UTILITY FACILITIES WITH THE CITY OF KIRKLAND. (Resolution No. 232)

A RESOLUTION OF THE BOARD OF COMMISSIONERS OF KING COUNTY WATER DISTRICT NO. 81 APPROVING A CONTRACT WITH THE CITY OF KIRKLAND. (Resolution No. 118)

A RESOLUTION OF THE BOARD OF COMMISSIONERS OF KING COUNTY WATER DISTRICT NO. 81 APPROVING AN AGREEMENT WITH THE CITY OF KIRKLAND. (Resolution No. 180)

A RESOLUTION OF THE COMMISSIONERS OF KING COUNTY WATER DISTRICT NO. 81 AUTHORIZING THE CREATION OF A CONTRACT WITH THE CITY OF KIRKLAND FOR THE SUPPLY OF WATER AND THE SERVICING OF A WATER DISTRIBUTION SYSTEM. (Resolution No. 9)

22. Severability. The invalidity of any clause, sentence, paragraph, subdivision, section or portion of this Agreement shall not affect the validity of the remainder of the Agreement.

23. Counterparts. This Agreement may be signed in counterparts and, if so signed, shall be deemed one integrated document.

24. Filing and Effective Date. This Agreement shall be filed with the King County Department of Records and Elections and the Secretary of State of the State of Washington and shall take effect upon approval and signature by each City.

CITY OF KIRKLAND

By _____
Its City Manager
Dated 9-29-97

Approved as to Form:
OFFICE OF THE KIRKLAND
CITY ATTORNEY

By _____
Its City Attorney
Dated 9-29-97

CITY OF REDMOND

By _____
Its EXEC ASST
Dated 9/25/97

Approved as to Form:
OFFICE OF THE REDMOND
CITY ATTORNEY

By _____
Its Assistant City Attorney
Dated 9/4/97

CITY OF BELLEVUE

By _____
Its Deputy City Mgr.
Dated 10/9/97

Approved as to Form:
OFFICE OF THE BELLEVUE
CITY ATTORNEY

By _____
Its Asst City Atty
Dated 10/6/97

3city94\operagre\rjp:nmw
4/21/94

Attachment

TABLE V-2B
JOINT OWNERSHIP FACILITIES-WATER SUPPLY, STORAGE AND TRANSMISSION
PERCENTAGE AND VALUE OF OWNERSHIP BEFORE ASSUMPTION

DESCRIPTION	CITY AREA	SERVICE YEAR	ORIG. COST OR EST.	BEFORE ASSUMPTION				BEFORE ASSUMPTION			
				RHWD %	KRK %	REDMD %	BELL %	RHWD	KRK	REDMD	BELL
WATER SUPPLY FACILITIES											
WATER SUPPLY METERS FROM CITY OF SEATTLE											
STATION 5-12 INCH AT NE 116TH ST AND 132ND AVE NE	KIRKLAND	1959/1988	$45,000	15.0%	85.0%	0.0%	0.0%	$6,750	$38,250	$0	$0
FROM SEATTLE, WITH 12 X 4 PRV											
STATION 7A-16 INCH AT SR 908 AND 132ND AVE NE	REDMOND	1984	$32,000	50.0%	50.0%	0.0%	0.0%	$16,000	$16,000	$0	$0
FROM SEATTLE, WITH 10" & 12" BALL VALVES											
STATION 8-12 INCH AT NE 70TH ST AND 140TH AVE NE	REDMOND	1959/1968	$13,000	36.6%	50.0%	0.0%	13.4%	$4,758	$6,500	$0	$1,742
FROM SEATTLE, WITH 12" BALL VALVES AND 8" PRV											
WATER SUPPLY PRESSURE REGULATING STATIONS											
PRESURE REDUCING STATION SW TO 545 ZONE	KIRKLAND	1988	$27,000	100.0%	0.0%	0.0%	0.0%	$27,000	$0	$0	$0
PRESSURE REDUCING STATION SW TO 650 ZONE	REDMOND	1968	$8,000	100.0%	0.0%	0.0%	0.0%	$8,000	$0	$0	$0
LOCATED AT N LN SW 1/4 SEC 10-25-5,											
1100' W OF 140TH AVE NE											
PRESSURE REDUCING STATION SW TO 650 ZONE	KIRKLAND	1988	$33,000	100.0%	0.0%	0.0%	0.0%	$33,000	$0	$0	$0
LOCATED AT NE 85TH ST AND 132ND AVE NE											
TOTAL WATER SUPPLY FACILITIES			$158,000					$95,508	$60,750	$0	$1,742
PUMPING PLANT											
8000 GPM, TWO PUMPS WITH FOWER GENERATION-	REDMOND	1984	$423,647	60.5%	39.5%	0.0%	0.0%	$255,566	$168,081	$0	$0
545 ZONE INCLUDING TELEMETRY, LAND AND CONNECTING 16" AND		(LAND)	$51,775	60.5%	39.5%	0.0%	0.0%	$31,245	$20,530	$0	$0
20" DI WATER MAINS TO 132ND AVE NE TO N OF SR 908-W OF SITE											
SE CORNER OF SR 908 AND 132ND AVE NE											
3250 GPM, 5 PUMPS, TWO EQUIPED WITH	KIRKLAND	1969	$70,000	100.0%	0.0%	0.0%	0.0%	$70,000	$0	$0	$0
VARIABLE FREQUENCY DRIVE-650 ZONE											
SE CORNER OF NE 65TH ST AND 130TH AVE NE											
1993 CIP ADDITION-650 ZONE PS WIRING FOR EMERGENCY POWER	KIRKLAND	1993	$39,945	100.0%	0.0%	0.0%	0.0%	$39,945	$0	$0	$0
1993 CIP ADDITION-650 ZONE PS EMERGENCY POWER GENERATOR	KIRKLAND	1993	$54,508	100.0%	0.0%	0.0%	0.0%	$54,508	$0	$0	$0
SUBTOTAL LAND			$51,775					$31,245	$20,530	$0	$0
SUBTOTAL FACILITIES			$588,100					$420,019	$168,081	$0	$0
TOTAL PUMPING PLANT			$639,875					$451,264	$188,611	$0	$0
TRANSMISSION AND DISTRIBUTION											
RESERVOIRS											
11.2 MG STEEL AND TELEMETRY	KIRKLAND	1972	$701,949	36.6%	50.0%	0.0%	13.4%	$266,122	$344,906	$0	$90,920
SE CORNER OF NE 65TH ST AND 130TH AVE NE											
1993 CIP ADDITION-14.3 MG STEEL	KIRKLAND	1993	$3,158,299	49.6%	50.4%	0.0%	0.0%	$1,599,206	$1,559,093	$0	$0
ADJSCENT KIRKLAND MARK TWAIN PARK											
SW CORNER OF NE 108TH ST AND 132ND AVE NE											
TOTAL RESERVOIRS			$3,860,248					$1,865,328	$1,903,999	$0	$90,920
DISTRIBUTION											
REDMOND METERING STATIONS											
STATION 11-6 INCH AT NE 51ST ST AND	REDMOND	1982	$14,000	0.0%	0.0%	100.0%	0.0%	$0	$0	$14,000	$0
W LK SAMMAMISH PKWY NE											
STATION R1-6 INCH AT LEARY WAY NE AND	REDMOND	1986	$16,000	0.0%	0.0%	100.0%	0.0%	$0	$0	$16,000	$0
SAMMAMISH RIVER											
STATION R2-6 INCH AT NE 85TH ST AND	REDMOND	1986	$16,000	0.0%	0.0%	100.0%	0.0%	$0	$0	$16,000	$0
SAMMAMISH RIVER											
STATION R3-6 INCH AT NE 51ST ST AND	REDMOND	1986	$14,000	0.0%	0.0%	100.0%	0.0%	$0	$0	$14,000	$0
156TH AVE NE											
BELLEVUE METERING STATION											
STATION 10-6 INCH AT 140TH AVE NE AND	BELLEVUE	1982	$14,000	25.0%	0.0%	0.0%	75.0%	$3,500	$0	$0	$10,500
NE 61ST ST											
KIRKLAND METERING STATIONS-METERED SUPPLY TO KIRKLAND											
STATION 4-8 INCH AT NE 116TH ST AND I-405	KIRKLAND	1985	$36,487	50.0%	50.0%	0.0%	0.0%	$18,244	$0	$0	$0

TABLE JV-2B
JOINT-OWNERSHIP FACILITIES-WATER SUPPLY, STORAGE AND TRANSMISSION
PERCENTAGE AND VALUE OF OWNERSHIP BEFORE ASSUMPTION

DESCRIPTION	CITY AREA	SERVICE YEAR	ORIG. COST OR EST.	BEFORE ASSUMPTION				BEFORE ASSUMPTION			
				RHWD %	KRK %	REDMD %	BELL %	RHWD	KRK	REDMD	BELL
STATION 2-12 INCH AT NE 85TH ST AND I-405	KIRKLAND	1985	$36,487	50.0%	50.0%	0.0%	0.0%	$18,244	$0	$0	$0
STATION 1-12 INCH AT NE 60TH AND I-405	KIRKLAND	1985	$36,487	50.0%	50.0%	0.0%	0.0%	$18,244	$0	$0	$0
STATION 3-12 INCH AT NE 86TH ST AND I-405	KIRKLAND	1985	$36,487	50.0%	50.0%	0.0%	0.0%	$18,244	$0	$0	$0
SUBTOTAL METERING STATIONS			$219,948					$76,474	$0	$60,000	$10,500
TRANSMISSION MAINS-545 ZONE											
16" 132ND TRANSMISSION(1989 PWTF Loan for Main Replacement)											
9063'-16" DI ON 132ND AVE NE	KIRKLAND	1990	$588,000	100.0%	0.0%	0.0%	0.0%	$588,000	$0	$0	$0
FROM NE 85TH ST TO NE 116TH ST											
55'-16" DI ON 108TH AVE NE-14.3MG RESERVOIR CONNECTION	KIRKLAND	1990	$4,000	100.0%	0.0%	0.0%	0.0%	$4,000	$0	$0	$0
FROM E TO W SIDE OF 132ND AVE NE											
16" DI 11.2MG RES TO NE 55TH ST AND 140TH AVE NE(Item 3-1970 Jt. Const. Agreement)											
2500'-16" ON NE 66TH ST, 135TH AVE NE, & 136TH AVE NE	REDMOND	1971	$39,350	25.0%	0.0%	0.0%	75.0%	$9,838	$0	$0	$29,513
FROM 132ND AVE NE TO S LN SW 1/4 SEC 10-25-5											
1370'-16" DI ON S LN SW 1/4 SEC 10-25-5	REDMOND	1971	$21,564	25.0%	0.0%	0.0%	75.0%	$5,391	$0	$0	$16,173
FROM 136TH AVE NE TO 140TH AVE NE											
210'-16" ON 132ND AVE NE	KIRKLAND	1971	$3,305	25.0%	0.0%	0.0%	75.0%	$826	$0	$0	$2,479
FROM NE 66TH ST TO NE 65TH ST											
340'-16" DI ON NE 65TH ST	KIRKLAND	1971	$5,352	25.0%	0.0%	0.0%	75.0%	$1,338	$0	$0	$4,014
FROM 132ND AVE NE TO 11.2 MG RESERVOIR		4420									
20" DI TOLT LINE TO 11.2MG RESERVOIR(Item 7 1970 Jt Const. Agreement+1983 main replacement)											
290'-20" DI ON NE 65TH ST	KIRKLAND	1971	$5,394	36.6%	50.0%	0.0%	13.4%	$1,974	$2,697	$0	$723
FROM 305' W TO 132ND AVE NE											
620'-20" DI ON 132ND AVE NE	KIRKLAND	1968	$11,532	36.6%	50.0%	0.0%	13.4%	$4,221	$5,766	$0	$1,545
FROM OLD REDMOND ROAD TO NE 70TH ST											
2670'-20" DI ON NE 70TH ST	REDMOND	1968	$49,663	36.6%	50.0%	0.0%	13.4%	$18,177	$24,832	$0	$6,655
FROM 132ND AVE NE TO 140TH AVE NE											
895'-16" DI ON 132ND AVE NE	KIRKLAND	1983	$58,000	100.0%	0.0%	0.0%	0.0%	$58,000	$0	$0	$0
FROM OLD REDMOND ROAD TO NE 65TH ST											
700'-16" ON 132ND AVE NE	KIRKLAND	1968	$13,020	25.0%	0.0%	0.0%	75.0%	$4,765	$0	$0	$8,255
FROM OLD REDMOND RD TO NE 66TH ST											
24"-NE 85TH TOLT CONNECTION TO NE 70TH(1983 Jt. Const. Agreement)											
4260'-24" DI ON 132ND AVE NE	KIRKLAND	1983	$480,005	60.5%	39.5%	0.0%	0.0%	$288,915	$191,091	$0	$0
FROM NE 70TH ST TO SR-908(NE 85TH ST)											
INLET-OUTLET MAINS TO 14.3 MG RESERVOIR(1991 Jt. Const.Agreement)											
1993 CWIP ADDITIONS-16" INLET,18" AND 12" OUTLET, STORM	KIRKLAND	1993	$313,753	49.6%	50.4%	0.0%	0.0%	$156,378	$157,375	$0	$0
AND SANITARY DRAINS, AND CONTROL PUMP STATION AT											
14.3 MG RESERVOIR SITE BTW 132ND 1ND 129TH PL. N.E.											
TRANSMISSION MAINS-650 ZONE-650 PUMP SATION TO 132ND-DISTRIBUTION/TRANSMISSION LOOP											
320'-12" DI ON NE 65TH ST		1968	$8,000	100.0%	0.0%	0.0%	0.0%	$8,000	$0	$0	$0
FROM 132ND AVE NE TO 280' E OF 130TH AVE NE											
830'-12" DI ON 132ND AVE NE		1983	$28,953	100.0%	0.0%	0.0%	0.0%	$28,953	$0	$0	$0
FROM OLD REDMOND ROAD TO NE 65TH ST											
265'-12" DI ON NE 65TH ST		1968	$5,000	100.0%	0.0%	0.0%	0.0%	$5,000	$0	$0	$0
FROM 130TH AVE NE TO 280' E OF 130TH AVE NE											
1090'-12" DI ON 130TH AVE NE		1968	$16,000	100.0%	0.0%	0.0%	0.0%	$16,000	$0	$0	$0
FROM NE 65TH ST TO NE 70TH ST											
950'-12" DI ON NE 70TH ST		1990	$59,916	100.0%	0.0%	0.0%	0.0%	$59,916	$0	$0	$0
FROM 132ND AVE NE TO 130TH AVE NE											
SUBTOTAL TRANSMISSION MAINS			$1,710,809					$1,259,692	$381,760	$0	$69,357
TOTAL DISTRIBUTION FACILITIES			$1,930,757					$1,336,166	$381,760	$60,000	$79,857
TOTAL JOINT FACILITIES			$6,588,880					$3,748,267	$2,535,121	$60,000	$172,519

Attachment ...

TABLE V-2C
JOINT OWNERSHIP FACILITIES-WATER SUPPLY, STORAGE AND TRANSMISSION
PERCENTAGE AND VALUE OF OWNERSHIP AFTER ASSUMPTION

DESCRIPTION	CITY AREA	SERVICE YEAR	ORIG. COST OR EST.	AFTER ASSUMPTION				AFTER ASSUMPTION				
				RHWD %	KRK %	REDMD %	BELL %	RHWD	KRK	REDMD	BELL	
WATER SUPPLY FACILITIES												
WATER SUPPLY METERS FROM CITY OF SEATTLE												
STATION 5-12 INCH AT NE 116TH ST AND 132ND AVE NE	KIRKLAND	1959/1988	$45,000	0.0%	66.0%	34.0%	0.0%	$0	$29,700	$15,300	$0	S-3
FROM SEATTLE, WITH 12 X 4 PRV												
STATION 7A-16 INCH AT SR 908 AND 132ND AVE NE	REDMOND	1984	$32,000	0.0%	66.0%	34.0%	0.0%	$0	$21,120	$10,880	$0	S-2
FROM SEATTLE, WITH 10" & 12" BALL VALVES												
STATION 8-12 INCH AT NE 70TH ST AND 140TH AVE NE	REDMOND	1959/1968	$13,000	0.0%	57.2%	29.4%	13.4%	$0	$7,436	$3,822	$1,742	S-1
FROM SEATTLE, WITH 12" BALL VALVES AND 8" PRV												
WATER SUPPLY PRESSURE REGULATING STATIONS												
PRESURE REDUCING STATION SW TO 545 ZONE	KIRKLAND	1988	$27,000	0.0%	66.0%	34.0%	0.0%	$0	$17,820	$9,180	$0	
PRESSURE REDUCING STATION SW TO 650 ZONE	REDMOND	1968	$8,000	0.0%	86.0%	14.0%	0.0%	$0	$6,880	$1,120	$0	
LOCATED AT N LN SW 1/4 SEC 10-25-5,												
1100' W OF 140TH AVE NE												
PRESSURE REDUCING STATION SW TO 650 ZONE	KIRKLAND	1988	$33,000	0.0%	86.0%	14.0%	0.0%	$0	$28,380	$4,620	$0	
LOCATED AT NE 85TH ST AND 132ND AVE NE												
TOTAL WATER SUPPLY FACILITIES			$158,000					$0	$111,336	$44,922	$1,742	
PUMPING PLANT												
8000 GPM,TWO PUMPS WITH POWER GENERATION-	REDMOND	1984	$423,647	0.0%	66.0%	34.0%	0.0%	$0	$279,607	$144,040	$0	S-2
545 ZONE INCLUDING TELEMETRY, LAND AND CONNECTING 16" AND		(LAND)	$51,775	0.0%	66.0%	34.0%	0.0%	$0	$34,171	$17,603	$0	
20" DI WATER MAINS TO 132ND AVE NE TO N OF SR 908-W OF SITE												
SE CORNER OF SR 908 AND 132ND AVE NE												
3250 GPM, 5 PUMPS, TWO EQUIPED WITH	KIRKLAND	1969	$70,000	0.0%	86.0%	14.0%	0.0%	$0	$60,200	$9,800	$0	S RES., P.S.
VARIABLE FREQUENCY DRIVE-650 ZONE												
SE CORNER OF NE 65TH ST AND 130TH AVE NE												
1993 CIP ADDITION-650 ZONE PS WIRING FOR EMERGENCY POWER	KIRKLAND	1993	$39,945	0.0%	86.0%	14.0%	0.0%	$0	$34,353	$5,592	$0	
1993 CIP ADDITION-650 ZONE PS EMERGENCY POWER GENERATOR	KIRKLAND	1993	$54,508	0	100.0%	0.0%	0.0%	$0	$54,508	$0	$0	S RES P.S
SUBTOTAL LAND			$51,775					$0	$34,171	$17,603	$0	
SUBTOTAL FACILITIES			$588,100					$0	$428,668	$159,432	$0	
TOTAL PUMPING PLANT			$639,875					$0	$462,839	$177,036	$0	
TRANSMISSION AND DISTRIBUTION												
RESERVOIRS												
11.2 MG STEEL AND TELEMETRY	KIRKLAND	1972	$701,949	0.0%	57.2%	29.4%	13.4%	$0	$403,589	$207,439	$90,920	S RES
SE CORNER OF NE 65TH ST AND 130TH AVE NE												
1993 CIP ADDITION-14.3 MG STEEL	KIRKLAND	1993	$3,158,299	0.0%	66.0%	34.0%	0.0%	$0	$2,084,478	$1,073,822	$0	N RES
ADJSCENT KIRKLAND MARK TWAIN PARK												
SW CORNER OF NE 108TH ST AND 132ND AVE NE												
TOTAL RESERVOIRS			$3,860,248					$0	$2,488,067	$1,281,261	$90,920	
DISTRIBUTION												
REDMOND METERING STATIONS												
STATION 11-6 INCH AT NE 51ST ST AND	REDMOND	1982	$14,000	0.0%	0.0%	100.0%	0.0%	$0	$0	$14,000	$0	R-1
W LK SAMMAMISH PKWY NE												
STATION R1-6 INCH AT LEARY WAY NE AND	REDMOND	1986	$16,000	0.0%	0.0%	100.0%	0.0%	$0	$0	$16,000	$0	R-3
SAMMAMISH RIVER												
STATION R2-6 INCH AT NE 85TH ST AND	REDMOND	1986	$16,000	0.0%	0.0%	100.0%	0.0%	$0	$0	$16,000	$0	R-4
SAMMAMISH RIVER												
STATION R3-6 INCH AT NE 51ST ST AND	REDMOND	1986	$14,000	0.0%	0.0%	100.0%	0.0%	$0	$0	$14,000	$0	R-2 (Not monitored)
156TH AVE NE												
BELLEVUE METERING STATION												
STATION 10-6 INCH AT 140TH AVE NE AND	BELLEVUE	1982	$14,000	0.0%	0.0%	25.0%	75.0%	$0	$0	$3,500	$10,500	B-1
NE 61ST ST												
KIRKLAND METERING STATIONS-METERED SUPPLY TO KIRKLAND												
STATION 4-8 INCH AT NE 116TH ST AND I-405	KIRKLAND	1985	$36,487	0.0%	100.0%	0.0%	0.0%	$0	$36,487	$0	$0	K-4

TABLE 1C
JOINT OWNERSHIP FACILITIES-WATER SUPPLY, STORAGE AND TRANSMISSION
PERCENTAGE AND VALUE OF OWNERSHIP AFTER ASSUMPTION

DESCRIPTION	CITY AREA	SERVICE YEAR	ORIG. COST OR EST.	AFTER ASSUMPTION				AFTER ASSUMPTION			
				RHWD %	KRK %	REDMD %	BELL %	RHWD	KRK	REDMD	BELL
STATION 2-12 INCH AT NE 85TH ST AND I-405	KIRKLAND	1985	$36,487	0.0%	100.0%	0.0%	0.0%	$0	$36,487	$0	$0
STATION 1-12 INCH AT NE 60TH AND I-405	KIRKLAND	1985	$36,487	0.0%	100.0%	0.0%	0.0%	$0	$36,487	$0	$0
STATION 3-12 INCH AT NE 86TH ST AND I-405	KIRKLAND	1985	$36,487	0.0%	100.0%	0.0%	0.0%	$0	$36,487	$0	$0
SUBTOTAL METERING STATIONS			$219,948					$0	$145,948	$63,500	$10,500
TRANSMISSION MAINS-545 ZONE											
16" 132ND TRANSMISSION(1989 PWTF Loan for Main Replacement)											
9063'-16" DI ON 132ND AVE NE	KIRKLAND	1990	$588,000	0.0%	66.0%	34.0%	0.0%	$0	$388,080	$199,920	$0
FROM NE 85TH ST TO NE 116TH ST											
55'-16" DI ON 108TH AVE NE-14.3MG RESERVOIR CONNECTION	KIRKLAND	1990	$4,000	0.0%	66.0%	34.0%	0.0%	$0	$2,640	$1,360	$0
FROM E TO W SIDE OF 132ND AVE NE											
16" DI 11.2MG RES TO NE 55TH ST AND 140TH AVE NE(Item 3-1970 Jt. Const. Agreement)											
2500'-16" ON NE 66TH ST, 135TH AVE NE, & 136TH AVE NE	REDMOND	1971	$39,350	0.0%	0.0%	25.0%	75.0%	$0	$0	$9,838	$29,513
FROM 132ND AVE NE TO S LN SW 1/4 SEC 10-25-5											
1370'-16" DI ON S LN SW 1/4 SEC 10-25-5	REDMOND	1971	$21,564	0.0%	0.0%	25.0%	75.0%	$0	$0	$5,391	$16,173
FROM 136TH AVE NE TO 140TH AVE NE											
210'-16" ON 132ND AVE NE	KIRKLAND	1971	$3,305	0.0%	0.0%	25.0%	75.0%	$0	$0	$826	$2,479
FROM NE 66TH ST TO NE 65TH ST											
340'-16" DI ON NE 65TH ST	KIRKLAND	1971	$5,352	0.0%	0.0%	25.0%	75.0%	$0	$0	$1,338	$4,014
FROM 132ND AVE NE TO 11.2 MG RESERVOIR		4420									
20" DI TOLT LINE TO 11.2MG RESERVOIR(Item 7 1970 Jt Const. Agreement+1983 main replacement)											
290'-20" DI ON NE 65TH ST	KIRKLAND	1971	$5,394	0.0%	57.2%	29.4%	13.4%	$0	$3,085	$1,586	$723
FROM 305' W TO 132ND AVE NE											
620'-20" DI ON 132ND AVE NE	KIRKLAND	1968	$11,532	0.0%	57.2%	29.4%	13.4%	$0	$6,596	$3,390	$1,545
FROM OLD REDMOND ROAD TO NE 70TH ST											
2670'-20" DI ON NE 70TH ST	REDMOND	1968	$49,663	0.0%	57.2%	29.4%	13.4%	$0	$28,407	$14,601	$6,655
FROM 132ND AVE NE TO 140TH AVE NE											
895'-16" DI ON 132ND AVE NE	KIRKLAND	1983	$58,000	0.0%	41.2%	58.8%	0.0%	$0	$23,890	$34,110	$0
FROM OLD REDMOND ROAD TO NE 65TH ST											
700'-16" ON 132ND AVE NE	KIRKLAND	1968	$13,020	0.0%	0.0%	25.0%	75.0%	$0	$0	$4,765	$8,255
FROM OLD REDMOND RD TO NE 66TH ST											
24"-NE 85TH TOLT CONNECTION TO NE 70TH(1983 Jt. Const. Agreement)											
4260'-24" DI ON 132ND AVE NE	KIRKLAND	1983	$480,005	0.0%	66.0%	34.0%	0.0%	$0	$316,804	$163,202	$0
FROM NE 70TH ST TO SR-908(NE 85TH ST)											
INLET-OUTLET MAINS TO 14.3 MG RESERVOIR(1991 Jt. Const.Agreement)											
1993 CWIP ADDITIONS-16" INLET,18" AND 12" OUTLET, STORM	KIRKLAND	1993	$313,753	0.0%	66.0%	34.0%	0.0%	$0	$207,077	$106,676	$0
AND SANITARY DRAINS, AND CONTROL PUMP STATION AT											
14.3 MG RESERVOIR SITE BTW 132ND 1ND 129TH PL. N.E.											
TRANSMISSION MAINS-650 ZONE-650 PUMP SATION TO 132ND-DISTRIBUTION/TRANSMISSION LOOP											
320'-12" DI ON NE 65TH ST		1968	$8,000	0.0%	86.0%	14.0%	0.0%	$0	$6,880	$1,120	$0
FROM 132ND AVE NE TO 280' E OF 130TH AVE NE											
830'-12" DI ON 132ND AVE NE		1983	$28,953	0.0%	86.0%	14.0%	0.0%	$0	$24,900	$4,053	$0
FROM OLD REDMOND ROAD TO NE 65TH ST											
265'-12" DI ON NE 65TH ST		1968	$5,000	0.0%	86.0%	14.0%	0.0%	$0	$4,300	$700	$0
FROM 130TH AVE NE TO 280' E OF 130TH AVE NE											
1090'-12" DI ON 130TH AVE NE		1963	$16,000	0.0%	86.0%	14.0%	0.0%	$0	$13,760	$2,240	$0
FROM NE 65TH ST TO NE 70TH ST											
950'-12" DI ON NE 70TH ST		1990	$59,916	0.0%	86.0%	14.0%	0.0%	$0	$51,528	$8,388	$0
FROM 132ND AVE NE TO 130TH AVE NE											
SUBTOTAL TRANSMISSION MAINS			$1,710,809					$0	$1,077,948	$563,505	$69,357
TOTAL DISTRIBUTION FACILITIES			$1,930,757					$0	$1,223,896	$627,005	$79,857
TOTAL JOINT FACILITIES			$6,588,880					$0	$4,286,138	$2,130,224	$172,519

K-2
K-1
K-3

APPENDIX E

Water System Facilities Data

City of Kirkland
Comprehensive Water System Plan
Supply Station Facilities Data

Supply Facility Data

Name	Suction Pressure Zone	Discharge Pressure Zone	Year Const.	Above or Below Grade	Maximum Capacity (gpm)	Flow Meter Size	Have Standby Power	Have Pressure Relief	Have Surge Protection
SS1	SPU	545		Below	3,500	12			
SS2	SPU	545		Below	8,000	16			
SS3	SPU	545		Below	4,500	12			
					16,000				

Control Valve Data

Name	Description	Control Valve Size	Control Valve Model	Valve Mfgr	Valve Elv (feet)	Valve Set Point (psi)	Valve Set Point (feet H.E.)
SS1	Mainline	8		Cla-Val	465		465
SS2	Mainline	12		Cla-Val	392		392
SS2	Bypass	10		Cla-Val	392		392
SS3	Mainline	10		Cla-Val	343		343
SS3	Bypass	3		Cla-Val	343		343

Control Data

Name	Control Component	Supplied Pressure Zone	Supply To Zone Priority	Supply Operation Priority	Station Have Telemetry
SS1	Flow Rate Controlled	545			Yes
SS2	Flow Rate Controlled	545			Yes
SS3	Flow Rate Controlled	545			Yes

Other Data

Name	Ground Elv (feet)	Control Valve Elv (feet)	SPU Min. Con. Head (feet)[1]	Normal Pressure Inlet (psi)	Normal Pressure Outlet (psi)
SS1	471	465	520		
SS2	398	392	535		
SS3	349	343	555		

1 Minimum head elevations based on NAVD 88 Datum per 50-year Declining Block agreement between Cascade and Seattle.

City of Kirkland
Comprehensive Water System Plan
Storage Facilities Data

Reservoir Data

Reservoir Name	Pressure Zone	Year Const.	Material	Capacity (gallons)	Overall Height (feet)	Diameter (feet)	Water Base Elv (feet)	Overflow Elv (feet)	Ground Elv (feet)	Seismic Restraint (Y or N)
11.2 MG South Res	545	1971	Steel	11,200,000	50.0	195	495.1	545.1	496	Y
14.3 MG North Res	450	1994	Steel	14,300,000	103.0	154	347.1	450.1	347	N

Piping Data

Reservoir Name	Outlet Size (in)	Inlet Size (in)	Elevated Inlet Elv. (feet)	Altitude Valve		Overflow Size (in)	Drain Size (in)	Meter Size (in)	Notes
				Size (in)	Setting (feet)				
11.2 MG South Res	20, 20	16		16		6	12/6	n/a	1
14.3 MG North Res	18	16		12		8	12	n/a	2

1. Altitude control valve with backpressure sustaining and 8" insertion flow meter on inlet piping
2. Altitude control valve (Cla-Val 210-03-ADS) with solenoid control from 615 Zone

Storage Data

Reservoir Name	Max Water Height (feet)	Volume Per Foot (gallons)
11.2 MG South Res	50.0	223,404
14.3 MG North Res	103.0	139,336

Level Control Data

Reservoir Name	Controlled Supply Facility	Reservoir Have Telemetry	Normal Operating Range (feet)
11.2 MG South Res	650 Zone BPS	Yes	538.1
14.3 MG North Res	545 Zone BPS	Yes	440.1

City of Kirkland
Comprehensive Water System Plan
Pump Station Facilities Data

Pump Station Data

Name	Suction Pressure Zone	Discharge Pressure Zone	Year Const.	Above or Below Grade	Maximum Capacity (gpm)	Meter Size & Model	Have Standby Power	Have E.G. Set Receptacle	Have Surge Protection
650 Zone BPS	545	650	2004	Above	5,250	12	Yes	Yes	
545 Zone BPS	450	545	1991 (Rehab)	Below	2,500	12			

Pump Data

Pump Name	Pump Manufacturer	Pump Model	Pump Type	Current Pump Rate (gpm)	Design Capacity (gpm)	Design Head (feet)	Motor Mfgr	Motor Size (HP)	Control Valve Size & Model
650 BPS									
Booster Pump #1	American-Marsh	6x8-12 HD	Centrifugal	1750	1750	129		75	Check only
Booster Pump #2	American-Marsh	6x8-12 HD	Centrifugal	1750	1750	129		75	Check only
Booster Pump #3	American-Marsh	6x8-12 HD	Centrifugal	1750	1750	129		75	Check only
Booster Pump #4	American-Marsh	6x8-12 HD	Centrifugal	1750	1750	129		75	Check only
Booster Pump #5	American-Marsh	3x4-15 HD	Centrifugal	400	400	129		25	Check only
Booster Pump #6	American-Marsh	3x4-15 HD	Centrifugal	400	400	129		25	Check only
Notes:	All pumps have VFD's								
545 BPS									
Booster Pump #1	Floway	8 JOH	VT 6 stage		2500		GE	30	Check only
Notes:	All pumps have VFD's								

Pump Curve Data

Pump Name	Point 1		Point 2		Point 3		Pump Serial Number		Pump Impeller Diameter
	Flow (gpm)	Head (feet)	Flow (gpm)	Head (feet)	Flow (gpm)	Head (feet)			
Booster Pump #1	500	182	1750	129	2000	120			
Booster Pump #2	500	182	1750	129	2000	120			
Booster Pump #3	500	182	1750	129	2000	120			
Booster Pump #4	500	182	1750	129	2000	120			
Booster Pump #5	240	150	400	129	560	100			
Booster Pump #6	240	150	400	129	560	100			

Pump Control Data

Pump Name	Control Facility	Supplied Pressure Zone	Supply To Zone Priority	Pump Operation Priority	Station Have Telemetry
Booster Pump #1	650 Zone pressure	650	Primary	2nd Lag	Yes
Booster Pump #2	650 Zone pressure	650	Primary	3rd Lag	Yes
Booster Pump #3	650 Zone pressure	650	Primary	4th Lag	Yes
Booster Pump #4	650 Zone pressure	650	Primary	4th Lag	Yes
Booster Pump #5	650 Zone pressure	650	Primary	Primary	Yes
Booster Pump #6	650 Zone pressure	650	Primary	1st Lag	Yes

City of Kirkland
Comprehensive Water System Plan
Pressure Reducing Station Data

Pressure Zone	PRV Name	Description	Size (inches)	Valve Mfgr	Elevation (feet)	PRV SETPOINT - PRESSURE January 2013 Actual Setpoints (psi)	PRV SETPOINT - HYDRAULIC GRADE January 2013 Actual Setpoints (feet)
650 Zone	13205 NE 85th Street	Small PRV	4	Cla-Val	391.08	114	654
		Large PRV	8	Cla-Val	391.08	109	643
	6001 Apartments	Small PRV	3	Cla-Val	422.15	105	664
		Large PRV	8	Cla-Val	422.15	100	653
590 Zone	NE 60th Street & 117th Avenue	Small PRV	3	Cla-Val	477.32	48	588
		Large PRV	8	Cla-Val	477.32	42	574
	6572 116th Place NE	Small PRV	2	Cla-Val	410.97	76	586
		Large PRV	4	Cla-Val	410.97	69	570
545 Zone	7042 132nd Avenue NE	Small PRV	3	Cla-Val	463.54	30	533
		Large PRV	12	Cla-Val	463.54	25	521
	140th Avenue NE & NE 70th Street	Small PRV					
		Large PRV	8	Cla-Val	374.92	74	546
	13205 NE 85th Street	Small PRV	10		396.78	65	547
		Large PRV	12		396.78	60	535
	11615 132nd Avenue NE	Small PRV	3	Cla-Val	336.35	85	533
		Large PRV	10	Cla-Val	336.35	90	544
510 Zone	NE 86th Street & 116th Avenue NE	Small PRV	3	Cla-Val	246.30	112	505
		Large PRV	8	--	246.30	108	496
450 Zone	11033 NE 100th Street	Small PRV	3	Cla-Val	270.25	70	432
		Large PRV	10	Cla-Val	270.25	65	420
	12020 NE 85th Street	Small PRV	3	Cla-Val	261.81	68	419
		Large PRV	10	Cla-Val	261.81	63	407
	8554 122nd Avenue NE	Small PRV	2	Cla-Val	267.47	70	429
		Large PRV	6	Cla-Val	267.47	65	417
	12711 NE 116th Street	Small PRV	3	Cla-Val	236.74	83	428
		Large PRV	10	Cla-Val	236.74	79	419
	10915 NE 45th Street	Small PRV	3	Cla-Val	295.08	58	429
		Large PRV	6	Cla-Val	295.08	53	417
	6007 111th Place NE	Small PRV	3	Cla-Val	310.96	52	431
		Large PRV	6	Cla-Val	312.34	57	444
		Large PRV	12	Cla-Val	314.34	50	430
	8500 114th Avenue NE	Small PRV	4	Cla-Val	228.56	90	436
			6		228.56	94	446
		Large PRV	10	Cla-Val	228.56	88	432
395 Zone	12230 NE 116th Street	Small PRV	3	Cla-Val	175.27	92	388
		Large PRV	10	Cla-Val	175.27	87	376
	11616 127th Lane NE	Small PRV	4	Cla-Val	225.64	72	392
		Large PRV	10	Cla-Val	225.64	66	378
	11909 132nd Place NE	Small PRV	3	Cla-Val	307.68	35	388
		Large PRV	8	Cla-Val	307.68	30	377
315 Zone	724 8th Street	Small PRV	3	Cla-Val	103.67	96	325
		Large PRV	8	Cla-Val	103.67	85	300
	1348 6th Street	Small PRV	3	Cla-Val	174.66	59	311
		Large PRV	8	Cla-Val	174.66	54	299
	103 18th Avenue	Small PRV	2	Cla-Val	202.64	45	307
		Large PRV	6	Cla-Val	202.64	40	295
285 Zone	14th Avenue W & 8th Street W	Small PRV	3	Cla-Val	94.75	79	277
		Large PRV	6	Cla-Val	94.75	72	261
	10661 Forbes Creek Drive	Small PRV	2	Cla-Val	61.60	88	265
		Large PRV	8	Cla-Val	61.60	84	255
	10808 113th Court NE	Small PRV	2	Cla-Val	95.94	78	276
		Large PRV	8	Cla-Val	95.94	73	264
	10412 NE 116th Street	Small PRV	3	Cla-Val	190.96	35	272
		Large PRV	10	Cla-Val	190.96	30	260
	NE 121st Street & 106th Avenue NE	Small PRV	3	Cla-Val	190.94	40	283
		Large PRV	6	Cla-Val	190.94	35	272
	3802/3804 106th Avenue NE	Small PRV	4	Cla-Val	169.83	52	290
		Large PRV	8	Cla-Val	169.83	46	276
	NE 52nd Street & 104th Avenue NE	Small PRV	3	Cla-Val	173.32	46	279
		Large PRV	10	--	173.32	41	268
	10512 NE 68th Street	Small PRV	3	Cla-Val	153.20	56	282
		Large PRV	8	Cla-Val	153.20	51	271
	420 6th Street S	Small PRV	3	Cla-Val	168.79	48	280
		Large PRV	8	Cla-Val	168.79	45	273
	620 2nd Street	Small PRV	3	Cla-Val	141.63	62	285
		Large PRV	8	Cla-Val	141.63	54	266
	803 7th Avenue	Small PRV	3	Cla-Val	103.85	74	275
		Large PRV	8	Cla-Val	103.85	69	263
	NE 128th St & Willows Rd	Small PRV	3		112.62	73	282
		Large PRV	8		112.62	69	272
	NE 124th St	Small PRV	3		130.00	67	285
		Large PRV	8		130.00	63	276

APPENDIX F

Water System Facilities Inventory (WFI) Form

WATER FACILITIES INVENTORY (WFI) FORM

Washington State Department of Health
Division of Environmental Health
Office of Drinking Water

ONE FORM PER SYSTEM

Quarter: 1
Updated: 10/21/2013
Printed: 7/15/2014
WFI Printed For: On-Demand
Submission Reason: Annual Update

RETURN TO: Northwest Regional Office, 20425 72nd Ave S STE 310, Kent, WA, 98032

1. SYSTEM ID NO.	2. SYSTEM NAME	3. COUNTY	4. GROUP	5. TYPE
42250 T	KIRKLAND, CITY OF	KING	A	Comm

6. PRIMARY CONTACT NAME & MAILING ADDRESS	7. OWNER NAME & MAILING ADDRESS	8. Owner Number 003047
GREGORY A. NEUMANN [WATER MANAGER] 123 5TH AVE KIRKLAND, WA 98033	KIRKLAND, CITY OF NEED PRIMARY CONTACT 123 5TH AVE KIRKLAND, WA 98033	TITLE: PUBLIC WORKS DIRECTOR
STREET ADDRESS IF DIFFERENT FROM ABOVE	**STREET ADDRESS IF DIFFERENT FROM ABOVE**	
ATTN ADDRESS CITY STATE ZIP	ATTN ADDRESS CITY STATE ZIP	

9. 24 HOUR PRIMARY CONTACT INFORMATION	10. OWNER CONTACT INFORMATION
Primary Contact Daytime Phone: (425) 587-3910	Owner Daytime Phone: (425) 587-3800
Primary Contact Mobile/Cell Phone: (206) 949-4400	Owner Mobile/Cell Phone:
Primary Contact Evening Phone: (xxx) xxx-xxxx	Owner Evening Phone: (xxx) xxx-xxxx
Fax:(425) 587-3902 | E-mail: XXXXXX	Owner Fax Phone: | E-mail: XXXXXX

WAC 246-290-420(9) requires that water systems provide 24-hour contact information for emergencies.

11. SATELLITE MANAGEMENT AGENCY - SMA (check only one)

- [x] Not applicable (Skip to #12)
- [ ] Owned and Managed SMA NAME: _____ SMA Number:
- [ ] Managed Only
- [ ] Owned Only

12. WATER SYSTEM CHARACTERISTICS (mark all that apply)

- [ ] Agricultural
- [x] Commercial / Business
- [x] Day Care
- [x] Food Service/Food Permit
- [x] 1,000 or more person event for 2 or more days per year
- [x] Hospital/Clinic
- [x] Industrial
- [x] Licensed Residential Facility
- [x] Lodging
- [ ] Recreational / RV Park
- [x] Residential
- [x] School
- [ ] Temporary Farm Worker
- [x] Other (church, fire station, etc.): _____

13. WATER SYSTEM OWNERSHIP (mark only one)

- [ ] Association
- [x] City / Town
- [ ] County
- [ ] Federal
- [ ] Investor
- [ ] Private
- [ ] Special District
- [ ] State

14. STORAGE CAPACITY (gallons)

25,700,000

15	16	17	18										19			20	21						22	23	24			
	SOURCE NAME	INTERTIE	SOURCE CATEGORY										USE				TREATMENT						DEPTH		SOURCE LOCATION			
Source Number	LIST UTILITY'S NAME FOR SOURCE AND WELL TAG ID NUMBER. Example: WELL #1 XYZ456 IF SOURCE IS PURCHASED OR INTERTIED, LIST SELLER'S NAME Example: SEATTLE	INTERTIE SYSTEM ID NUMBER	WELL	WELL FIELD	WELL IN A WELL FIELD	SPRING	SPRING FIELD	SPRING IN A SPRING FIELD	SEA WATER	SURFACE WATER	RANNEY / INF.	OTHER	PERMANEANT	SEASONAL	EMERGENCY	SOURCE METERED	NONE	CHLORINATION	FILTRATION	FLUORIDATION	IRRADIATION (UV)	OTHER	DEPTH TO FIRST OPEN INTERVAL IN FEET	CAPACITY (GALLONS PER MINUTE)	1/4, 1/4 SECTION	SECTION NUMBER	TOWNSHIP	RANGE
S01	77050Y/SEATTLE	77050 Y											X			Y	X							0			00N	00E
S02	40800/Northshore	40800 5													X	N	X							0			00N	00E

WATER FACILITIES INVENTORY (WFI) FORM - Continued

1. SYSTEM ID	2. SYSTEM NAME	3. COUNTY	4. GROUP	5. TYPE
42250 T	KIRKLAND, CITY OF	KING	A	Comm

	ACTIVE SERVICE CONNECTIONS	DOH USE ONLY! CALCULATED ACTIVE CONNECTIONS	DOH USE ONLY! APPROVED CONNECTIONS
25. SINGLE FAMILY RESIDENCES (How many of the following do you have?)	0	19101	Unspecified
A. Full Time Single Family Residences (Occupied 180 days or more per year)	9452		
B. Part Time Single Family Residences (Occupied less than 180 days per year)	0		
26. MULTI-FAMILY RESIDENTIAL BUILDINGS (How many of the following do you have?)			
A. Apartment Buildings, condos, duplexes, barracks, dorms	1247		
B. Full Time Residential Units in the Apartments, Condos, Duplexes, Dorms that are occupied more than 180 days/year	9649		
C. Part Time Residential Units in the Apartments, Condos, Duplexes, Dorms that are occupied less than 180 days/year	0		
27. NON-RESIDENTIAL CONNECTIONS (How many of the following do you have?)			
A. Recreational Services and/or Transient Accommodations (Campsites, RV sites, hotel/motel/overnight units)	0	0	
B. Institutional, Commercial/Business, School, Day Care, Industrial Services, etc.	694	694	
28. TOTAL SERVICE CONNECTIONS		19795	

29. FULL-TIME RESIDENTIAL POPULATION

A. How many residents are served by this system 180 or more days per year? 40112

30. PART-TIME RESIDENTIAL POPULATION	JAN	FEB	MAR	APR	MAY	JUN	JUL	AUG	SEP	OCT	NOV	DEC
A. How many part-time residents are present each month?												
B. How many days per month are they present?												

31. TEMPORARY & TRANSIENT USERS	JAN	FEB	MAR	APR	MAY	JUN	JUL	AUG	SEP	OCT	NOV	DEC
A. How many total visitors, attendees, travelers, campers, patients or customers have access to the water system each month?	3886	3886	3886	3886	3886	3886	3886	3886	3886	3886	3886	3886
B. How many days per month is water accessible to the public?	31	28	31	30	31	30	31	31	30	31	30	31

32. REGULAR NON-RESIDENTIAL USERS	JAN	FEB	MAR	APR	MAY	JUN	JUL	AUG	SEP	OCT	NOV	DEC
A. If you have schools, daycares, or businesses connected to your water system, how many students daycare children and/or employees are present each month?	3992	3992	3992	3992	3992	3992	3992	3992	3992	3992	3992	3992
B. How many days per month are they present?	20	20	20	20	20	20	20	20	20	20	20	20

33. ROUTINE COLIFORM SCHEDULE	JAN	FEB	MAR	APR	MAY	JUN	JUL	AUG	SEP	OCT	NOV	DEC
* Requirement is exception from WAC 246-290	35*	35*	35*	35*	35*	35*	35*	35*	35*	35*	35*	35*

35. Reason for Submitting WFI:

☐ Update - Change ☐ Update - No Change ☐ Inactivate ☐ Re-Activate ☐ Name Change ☐ New System ☐ Other _____

36. I certify that the information stated on this WFI form is correct to the best of my knowledge.

SIGNATURE: _____

DATE: _____

PRINT NAME: _____

TITLE: _____

WS ID	WS Name
42250	KIRKLAND, CITY OF

Total WFI Printed: 1

APPENDIX H

Bellevue Intertie Agreements

ORIGINAL

FILED NO. 11884
CITY OF BELLEVUE
DATE 12/4/86
CITY CLERK
Res. 4820

4352m

WATER FACILITY TRANSFER AGREEMENT

North 300 Zone on Bellevue Way

This agreement made and entered into this 29th of December, 1986, by and between the City of Kirkland, a municipal corporation of the State of Washington, herinafter referred to as "Kirkland" and the City of Bellevue, a municipal corporation of the State of Washington, hereinafter referred to as "Bellevue",

WITNESSETH:

WHEREAS, Kirkland and Bellevue are authorized by Chapter 39.34 RCW, the Interlocal Cooperation Act, to enter into cooperative agreements; and

WHEREAS, the Kirkland water service area and its water system lie adjacent to the subject area described and designated on Exhibit A (attached hereto and by this reference incorporated herein); and

WHEREAS, Kirkland can serve the subject area more cost-effectively and the transfer of facilities can be implemented with minimal cost and effort; and

WHEREAS, both parties desire wherever possible and convenient to mutually assist one another;

NOW, THEREFORE, in consideration of the mutual covenants contained herein, it is hereby agreed as follows:

Section 1. The purpose of this agreement is to transfer water supply facilities in the subject area from Bellevue to Kirkland subject to the conditions stated herein.

Section 2. All water service facilities within the subject area described and designated on Exhibit A shall become the property of

Kirkland.

Section 3. Kirkland agrees to cap the existing water line on 104th Avenue Northeast at two sites and install a two-inch blow-off assembly in the line on Northeast Lake Washington Boulevard as shown on Exhibit A. This work is to be completed within three months of execution of this agreement and must comply with Bellevue regulations for such work.

Section 4. Each party agrees to provide the other party emergency water service through the water lines along Northeast Northrup Way and Northeast Lake Washington Boulevard. The party using the emergency service must notify the other party of its use within twelve (12) hours and an estimated quantity of water used within three days after the emergency connection is shut off. The party providing the water for emergency use may charge the using party at its wholesale rate plus forty-five percent.

Section 5. The property at 3645 Bellevue Way Northeast will continue to be a water service customer of Bellevue. Bellevue will continue to read the water service meter, bill the customer and respond to customer inquiries. Kirkland will provide water to Bellevue for this customer at its current wholesale rate and assure continued water supply at or above existing standards. Bellevue will reimburse Kirkland for this water bimonthly and provide consumption records upon request.

Section 6. With the exception of the facilities designated in Exhibit A to be transferred to Kirkland, neither party shall by virtue of this agreement acquire any proprietary or governmental interest in the water system of the other party. Each party shall be solely responsible for the operation and maintenance of its own system of water

distribution and shall save the other party harmless from any claim for damage, real or imaginary, made by a third party, and alleging negligence or misfeasance in the operation or maintenance of the other party's system, or in the acts of omissions of its own officers or employees.

Section 7. This interlocal agreement shall become effective upon authorized signature of both parties and shall remain in effect in perpetuity or until terminated or amended by written agreement of both parties.

Section 8. This interlocal agreement shall be administered jointly by the Public Works Director or designee of each respective party.

Section 9. A copy of this interlocal agreement shall be filed with the City Clerk of each respective city, the County Auditor and the Secretary of State.

Section 10. This writing embodies the entire agreement of the parties. There are no promises, terms, conditions, or obligations other than those contained herein. This agreement may be amended only by written instrument signed by both parties.

By Terrence F. Ellis Date 12/29/86
CITY OF KIRKLAND

Approved as to form:

Ralph E. [illegible] Date 12/29/86
City Attorney for
CITY OF KIRKLAND

By Pam Bissonnette Date 12/10/86
CITY OF BELLEVUE

Approved as to form:

City Attorney for
CITY OF BELLEVUE

Date Dec 4 1986

Exhibit A

Facilities to be transferred from Bellevue to Kirkland

.ocations to cap lines (2)

Location of 2" blow-off assembly (1)

Bellevue/Kirkland water zone valves (2)

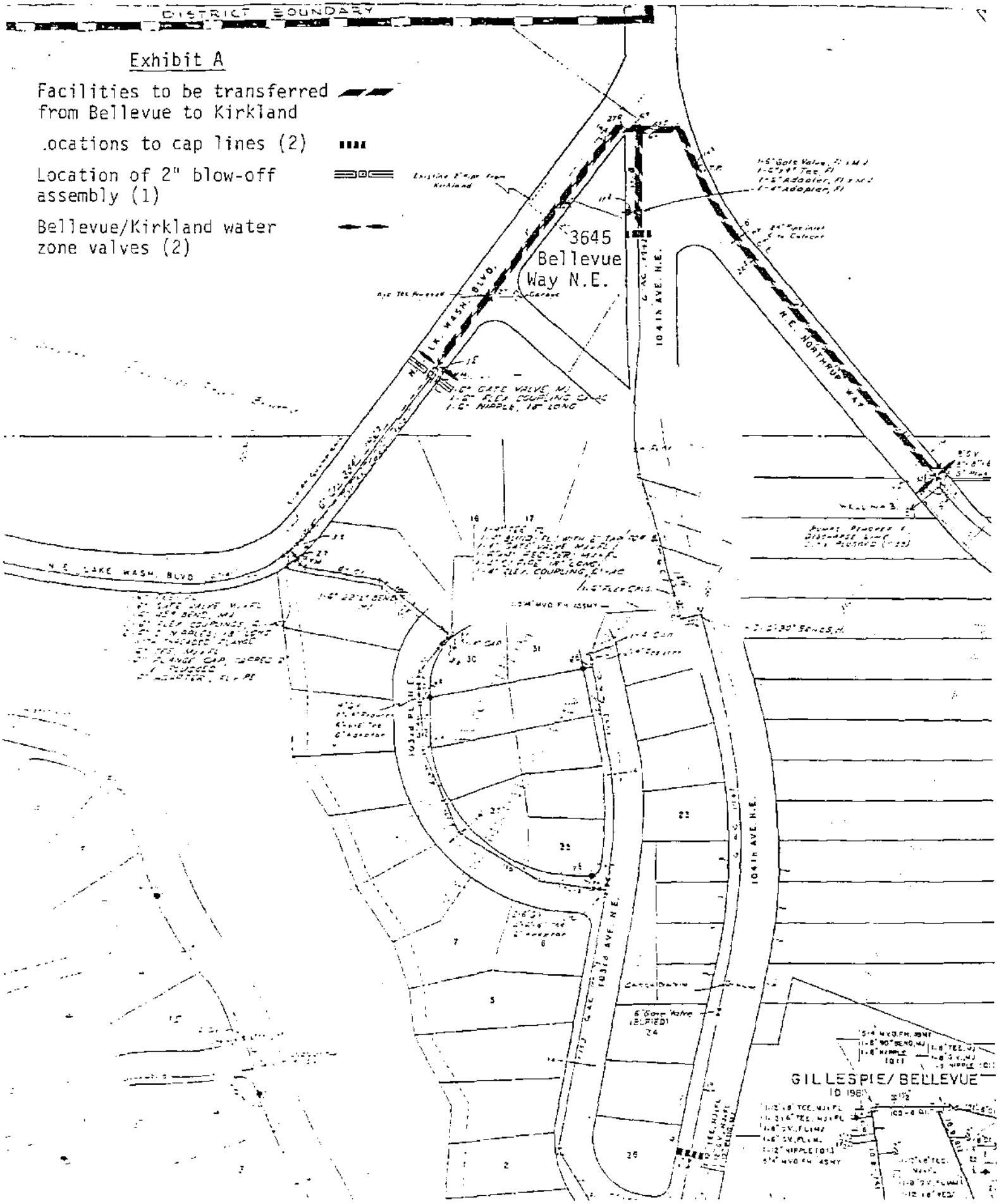

VICINITY MAP

Water Service Agreement--
North 300 Zone
on Bellevue Way

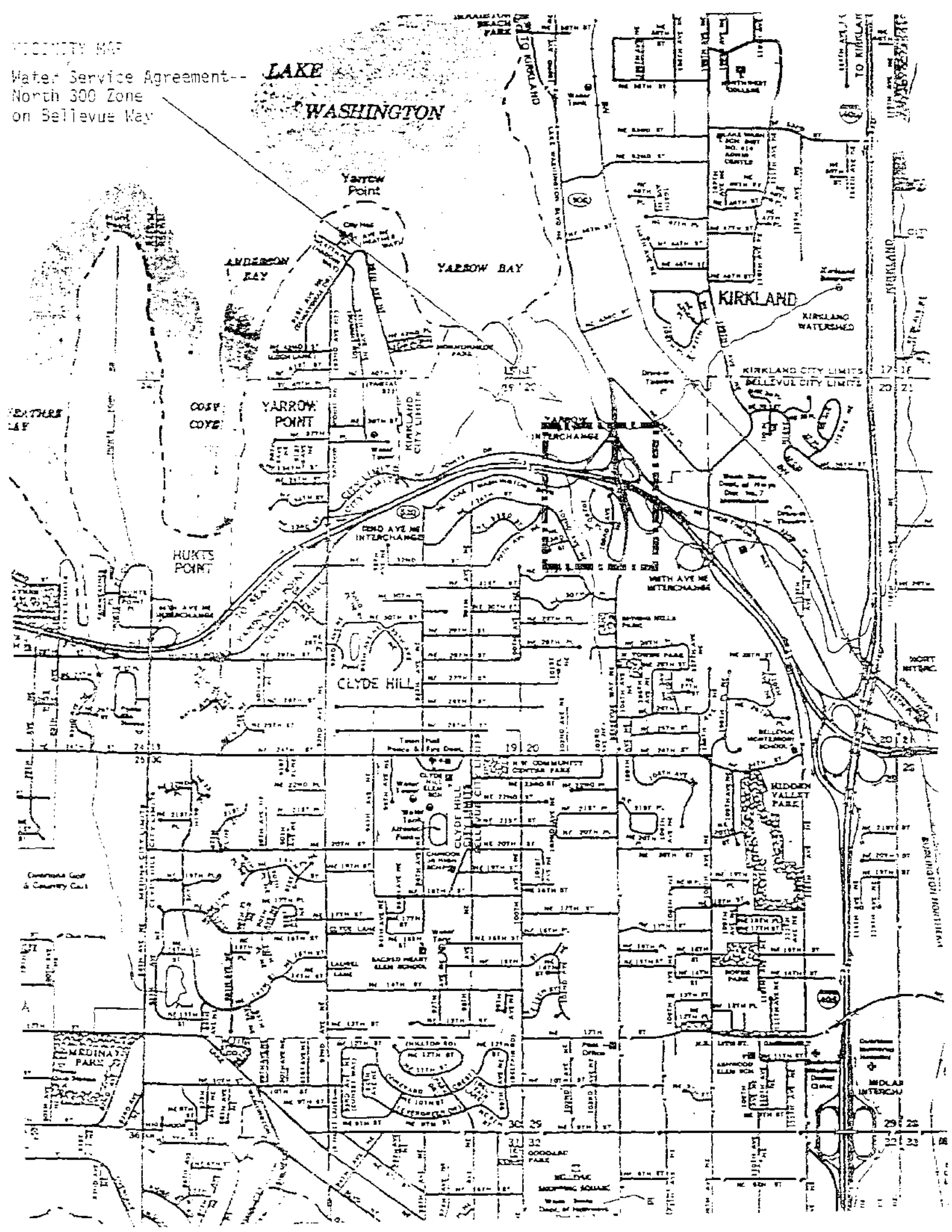

RESOLUTION R 3336

A RESOLUTION OF THE CITY COUNCIL OF THE CITY OF KIRKLAND AUTHORIZING THE CITY MANAGER TO SIGN ON BEHALF OF THE CITY OF KIRKLAND THAT CERTAIN INTERLOCAL GOVERNMENTAL AGREEMENT WITH THE CITY OF BELLEVUE PROVIDING FOR THE TRANSFER FROM THE BELLEVUE WATER SERVICE AREA TO THE KIRKLAND WATER SERVICE AREA THE WATER SERVICE FACILITIES AND CUSTOMERS WITHIN THE CITY OF BELLEVUE NORTH OF STATE ROUTE 520, AS MORE SPECIFICALLY DESCRIBED IN SAID AGREEMENT.

Whereas, the Kirkland water service area and its water system lie adjacent to that portion of Bellevue north of SR 520 and adjacent to 104th Avenue Northeast (Bellevue Way), all as more specifically described in Exhibit "A" to this Resolution; and

Whereas, Kirkland can serve the subject area more cost effectively and the transfer of facilities can be implemented with minimal cost and effort; and

Whereas, both the City of Kirkland and the City of Bellevue desire, whenever possible and convenient, to mutually assist one another; and

Whereas, both Bellevue and Kirkland are authorized by Chapter 39.34 RCW, the Interlocal Cooperation Act, to enter into cooperative agreements; now, therefore,

Be it resolved by the City Council of the City of Kirkland as follows:

Section 1. The City Manager for the City of Kirkland is hereby authorized and directed to sign on behalf of the City of Kirkland that certain water service agreement between the City of Kirkland and the City of Bellevue, copy of which is attached to the original of this Resolution as Exhibit "A" and by this reference incorporated herein.

Section 2. That certain agreement set forth as Exhibit "A" to this Resolution is hereby approved by the Kirkland City Council and when signed by both the City of Kirkland and the City of Bellevue, copies thereof shall be filed with the City Clerk for each City, the King County Department of Records and Elections and the Secretary of State for the State of Washington, all pursuant to the provisions of RCW Chapter 39.34.

Passed by majority vote of the Kirkland City Council in regular, open meeting this 15th day of December, 1986.

Signed in authentication thereof this 15th day of December, 1986.

Doris Cooper
MAYOR

ATTEST:

Director of Administration & Finance
(ex officio City Clerk)

COPY

INTERLOCAL AGREEMENT – Emergency Water Intertie 132nd Avenue NE

THIS AGREEMENT ("Agreement") is made this 6th day of Sept, 2012 (year), between the CITY OF BELLEVUE, a municipal corporation in King County, Washington ("Bellevue") and the CITY OF KIRKLAND, a municipal corporation in King County, Washington ("Kirkland").

SECTION 1. RECITALS

1.1 Bellevue provides water service to properties within the City of Bellevue along 132nd Avenue South of NE 60th Street in King County, Washington. Kirkland provides water service to properties along 132nd Avenue North of NE 60th Street within the City of Kirkland, King County, Washington. A portion of Bellevue's water service boundary is located adjacent to Kirkland's water service boundary.

1.2 Bellevue and Kirkland desire to obtain supplemental water supply for emergency purposes only by an intertie between their respective water systems, subject to certain terms and conditions contained in this Agreement.

1.3 Bellevue and Kirkland are authorized by Chapter 39.34 RCW, the Interlocal Cooperation Act, to enter into cooperative agreements.

In consideration of the terms and conditions contained herein, the parties now agree as follows:

SECTION 2. EMERGENCY INTERTIE

2.1 Bellevue and Kirkland agree to provide each other with an emergency standby source of water through an intertie connection between Bellevue and Kirkland water systems, at the location described and depicted on Attachment A. The intertie connection shall be constructed and paid for by Bellevue. This connection shall be an emergency standby connection (mainly for the purpose of additional fire flow availability to Bellevue), and water shall only be drawn through this point when an emergency occurs. An emergency shall be considered any event that requires Bellevue's or Kirkland's water supply to be augmented on a temporary emergency basis.

2.2 Bellevue or Kirkland shall notify the other party in writing at least twelve (12) hours in advance of the date either party desires to receive water through the intertie. In case an emergency requires immediate use of the intertie to protect lives or property, notification should occur as soon as practicable under the circumstances. Follow-up written notice of such emergency request and water usage shall be made by Bellevue or Kirkland to the other party, including an estimated quantity of water used, within three (3) days after the termination of such emergency water usage.

2.3 Bellevue shall own and install all of the pipes and valves located within the City of Bellevue and Kirkland shall own the pipes and valves within the City of Kirkland. Both Bellevue and Kirkland personnel are authorized to operate the intertie system with appropriate notification to the other party.

2.4 Bellevue and Kirkland shall use reasonable efforts to provide an uninterrupted supply of water. Neither party shall be liable for any shortage or interruption in the delivery of water. In addition, neither party shall be liable for any failure, interruption or shortage of water, or any loss or damage resulting therefrom occasioned by any cause beyond the control of either party. Bellevue and Kirkland do not guarantee the availability of water through the intertie at all times because of each party's respective needs and water demand. Further, during critical water shortage periods as determined by either party, Kirkland or Bellevue may close the intertie until sufficient water supply exists to make such available for use by either party.

2.5 In the event water is delivered through the intertie, the party receiving such water shall pay the other party for such water delivered at the wholesale rate plus ten percent (10%) by the party delivering such water. The party delivering such water shall bill the party receiving such water for the amount of water delivered. The party receiving such water shall pay the other party within forty-five (45) days of the date of such billing. Any billings not paid by the party within such 45-day period shall accrue interest at the rate of twelve percent (12%) per annum until paid.

SECTION 3. GENERAL PROVISIONS

3.1 Neither party shall by virtue of this Agreement acquire any proprietary or governmental interest in the water system of the other party. Each party shall be solely responsible for the operation and maintenance of its own system of water distribution.

3.2 Bellevue and Kirkland agree to hold harmless and indemnify the other party and its officers, employees and agents from any and all claims, damages, costs or other liabilities caused by parties' sole negligence or the parties' concurrent negligence, but only to the extent of the parties' concurrent negligence and arising by reason of participation in, connection with, or relating to the performance of this Agreement.

3.3 This Agreement shall be binding upon and inure to the benefit of the parties hereto and their respective successors and assigns.

3.4 Any notice to be given or any documents to be delivered by any party to any other shall be delivered in person or by certified mail and addressed to the parties to this Agreement at the following addresses:

Bellevue	Utilities Director City of Bellevue 450 110th Avenue, NE PO Box 90012 Bellevue, WA 98009-9012
With a copy to:	City Attorney City of Bellevue 450 110th Avenue, NE PO Box 90012 Bellevue, WA 98009-9012
Kirkland:	Public Works Director City of Kirkland 123 5th Avenue Kirkland, WA 98033
With a copy to:	City Attorney City of Kirkland 123 5th Avenue Kirkland, WA 98033

3.5 This Agreement constitutes the entire agreement between the parties with respect to the subject matter hereof and may be modified only by an agreement in writing signed by both parties.

3.6 This Agreement shall be administered jointly by the Bellevue Utility Director and Kirkland Public Works Director.

3.7 This Agreement shall take effect upon execution of this Agreement after authorization by Bellevue's City Council and Kirkland's City Council. This Agreement shall remain in effect until terminated by either party by thirty (30) days' prior written notice to the other party.

3.8 A copy of this Agreement shall be filed with the Bellevue and Kirkland City Clerks, the County Auditor, and the Washington Secretary of State.

Kirkland:

CITY OF KIRKLAND

By Kurt Triplett

Name: Kurt Triplett

Title: City Manager

Bellevue:

CITY OF BELLEVUE

By Brad Miyake

Name: Brad Miyake

Title: Deputy City Mgr

Approved as to Form:

OFFICE OF KIRKLAND ATTORNEY

By Oskar Rey

Name: Oskar Rey

Title: Asst. City Attorney

Approved as to Form:

OFFICE OF BELLEVUE CITY ATTORNEY

By Lacey L. Hatch

Name: Lacey L. Hatch

Title: Ass. City Attorney

Bellevue Kirkland Emergency Water Intertie– 132nd Ave

ATTACHMENT A

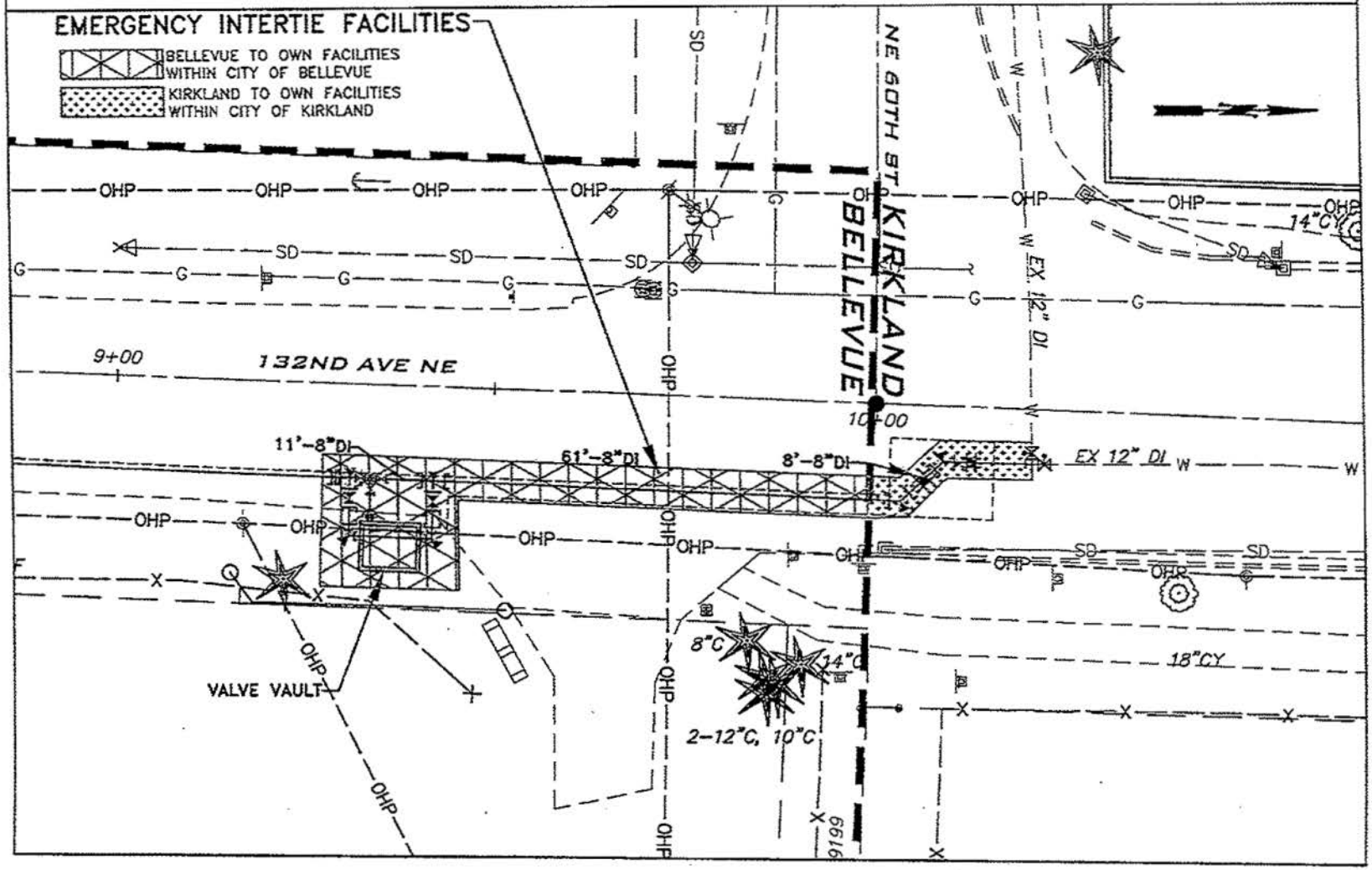

INTERLOCAL AGREEMENT – Emergency Water Intertie 132nd Avenue NE

THIS AGREEMENT ("Agreement") is made this 6th day of Sept, 2012 (year), between the CITY OF BELLEVUE, a municipal corporation in King County, Washington ("Bellevue") and the CITY OF KIRKLAND, a municipal corporation in King County, Washington ("Kirkland").

SECTION 1. RECITALS

1.1 Bellevue provides water service to properties within the City of Bellevue along 132nd Avenue South of NE 60th Street in King County, Washington. Kirkland provides water service to properties along 132nd Avenue North of NE 60th Street within the City of Kirkland, King County, Washington. A portion of Bellevue's water service boundary is located adjacent to Kirkland's water service boundary.

1.2 Bellevue and Kirkland desire to obtain supplemental water supply for emergency purposes only by an intertie between their respective water systems, subject to certain terms and conditions contained in this Agreement.

1.3 Bellevue and Kirkland are authorized by Chapter 39.34 RCW, the Interlocal Cooperation Act, to enter into cooperative agreements.

In consideration of the terms and conditions contained herein, the parties now agree as follows:

SECTION 2. EMERGENCY INTERTIE

2.1 Bellevue and Kirkland agree to provide each other with an emergency standby source of water through an intertie connection between Bellevue and Kirkland water systems, at the location described and depicted on Attachment A. The intertie connection shall be constructed and paid for by Bellevue. This connection shall be an emergency standby connection (mainly for the purpose of additional fire flow availability to Bellevue), and water shall only be drawn through this point when an emergency occurs. An emergency shall be considered any event that requires Bellevue's or Kirkland's water supply to be augmented on a temporary emergency basis.

2.2 Bellevue or Kirkland shall notify the other party in writing at least twelve (12) hours in advance of the date either party desires to receive water through the intertie. In case an emergency requires immediate use of the intertie to protect lives or property, notification should occur as soon as practicable under the circumstances. Follow-up written notice of such emergency request and water usage shall be made by Bellevue or Kirkland to the other party, including an estimated quantity of water used, within three (3) days after the termination of such emergency water usage.

2.3 Bellevue shall own and install all of the pipes and valves located within the City of Bellevue and Kirkland shall own the pipes and valves within the City of Kirkland. Both Bellevue and Kirkland personnel are authorized to operate the intertie system with appropriate notification to the other party.

2.4 Bellevue and Kirkland shall use reasonable efforts to provide an uninterrupted supply of water. Neither party shall be liable for any shortage or interruption in the delivery of water. In addition, neither party shall be liable for any failure, interruption or shortage of water, or any loss or damage resulting therefrom occasioned by any cause beyond the control of either party. Bellevue and Kirkland do not guarantee the availability of water through the intertie at all times because of each party's respective needs and water demand. Further, during critical water shortage periods as determined by either party, Kirkland or Bellevue may close the intertie until sufficient water supply exists to make such available for use by either party.

2.5 In the event water is delivered through the intertie, the party receiving such water shall pay the other party for such water delivered at the wholesale rate plus ten percent (10%) by the party delivering such water. The party delivering such water shall bill the party receiving such water for the amount of water delivered. The party receiving such water shall pay the other party within forty-five (45) days of the date of such billing. Any billings not paid by the party within such 45-day period shall accrue interest at the rate of twelve percent (12%) per annum until paid.

SECTION 3. GENERAL PROVISIONS

3.1 Neither party shall by virtue of this Agreement acquire any proprietary or governmental interest in the water system of the other party. Each party shall be solely responsible for the operation and maintenance of its own system of water distribution.

3.2 Bellevue and Kirkland agree to hold harmless and indemnify the other party and its officers, employees and agents from any and all claims, damages, costs or other liabilities caused by parties' sole negligence or the parties' concurrent negligence, but only to the extent of the parties' concurrent negligence and arising by reason of participation in, connection with, or relating to the performance of this Agreement.

3.3 This Agreement shall be binding upon and inure to the benefit of the parties hereto and their respective successors and assigns.

3.4 Any notice to be given or any documents to be delivered by any party to any other shall be delivered in person or by certified mail and addressed to the parties to this Agreement at the following addresses:

Bellevue	Utilities Director City of Bellevue 450 110th Avenue, NE PO Box 90012 Bellevue, WA 98009-9012
With a copy to:	City Attorney City of Bellevue 450 110th Avenue, NE PO Box 90012 Bellevue, WA 98009-9012
Kirkland:	Public Works Director City of Kirkland 123 5th Avenue Kirkland, WA 98033
With a copy to:	City Attorney City of Kirkland 123 5th Avenue Kirkland, WA 98033

3.5 This Agreement constitutes the entire agreement between the parties with respect to the subject matter hereof and may be modified only by an agreement in writing signed by both parties.

3.6 This Agreement shall be administered jointly by the Bellevue Utility Director and Kirkland Public Works Director.

3.7 This Agreement shall take effect upon execution of this Agreement after authorization by Bellevue's City Council and Kirkland's City Council. This Agreement shall remain in effect until terminated by either party by thirty (30) days' prior written notice to the other party.

3.8 A copy of this Agreement shall be filed with the Bellevue and Kirkland City Clerks, the County Auditor, and the Washington Secretary of State.

Kirkland:

CITY OF KIRKLAND

By Kurt Triplett

Name: Kurt Triplett

Title: City Manager

Approved as to Form:

OFFICE OF KIRKLAND ATTORNEY

By Oskean Rey

Name: Oskean Rey

Title: Asst. City Attorney

Bellevue:

CITY OF BELLEVUE

By Brad Miyake

Name: Brad Miyake

Title: Deputy City Mgr

Approved as to Form:

OFFICE OF BELLEVUE CITY ATTORNEY

By Lacey L. Hatch

Name: Lacey L. Hatch

Title: Ass. City Attorney

Bellevue Kirkland Emergency Water Intertie– 132nd Ave

ATTACHMENT A

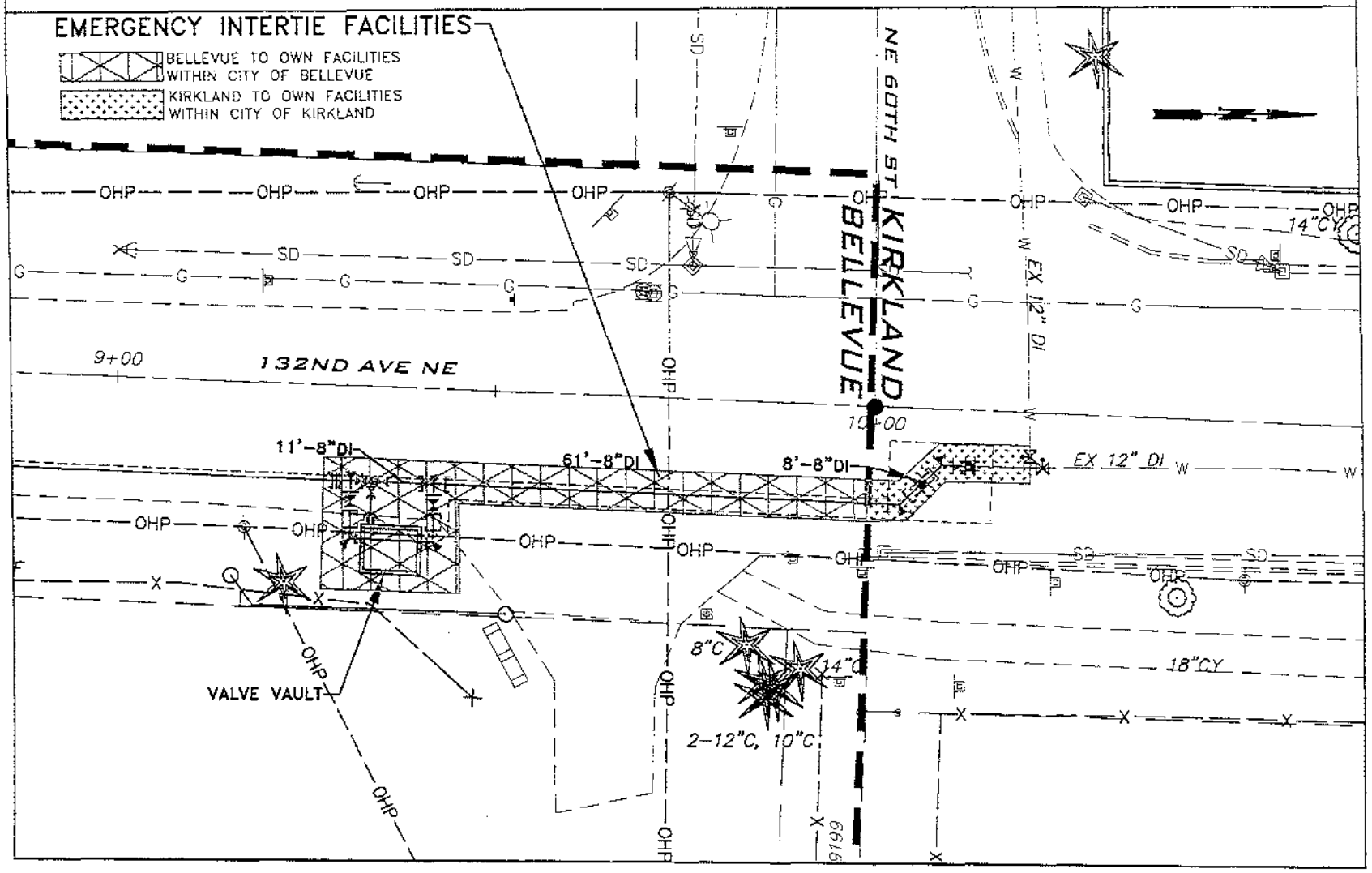

APPENDIX I

Consistency Statement Checklist

Washington State Department of Health
Division of Environmental Health
Office of Drinking Water

Local Government Consistency Review Checklist

Water System Name: City of Kirkland PWS ID: 42250 T

Planning/Engineering Document Title: Comprehensive Water System Plan Plan Date: August 2014

Local Government with Jurisdiction: City of Kirkland

WAC 246-290-108 Consistency with local plans and regulations:
Consistency with local plans and regulations applies to planning and engineering documents under WAC 246-290-106, 246-290-107, and 246-290-110(4)(b (ii).

1) Municipal water suppliers must include a consistency review and supporting documentation in its planning or engineering document describing how it has addressed consistency with **local plans and regulations**. This review must include specific elements of local plans and regulations, as they reasonably relate to water service as determined by Department of Health (DOH). Complete the table below and see instructions on back.

Local Government Consistency Statement	Page(s) in Planning Document	Yes – No – Not Applicable
a) The water system service area is consistent with the adopted land use and zoning within the applicable service area.	Fig 2-5 & 3-1 pg. 3-5	yes
b) The six-year growth projection used to forecast water demand is consistent with the adopted city/county's population growth projections. If a different growth projection is used, provide an explanation of the alternative growth projection and methodology.	pg. 3-5 to 3-7	yes
c) Applies to cities and towns that provide water service: All water service area policies of the city or town are consistent with the utility service extension ordinances of the city or town.	pg. 5-4 to 5-5 & App. S	yes
d) Service area policies for new service connections are consistent with the adopted local plans and adopted development regulations of all jurisdictions with authority over the service area [City(ies), County(ies)].	pg. 5-4 to 5-5	yes
e) Other relevant elements related to water supply are addressed in the water system plan, if applicable; Coordinated Water System plans, Regional Wastewater plans, Reclaimed Water plans, Groundwater Area Management plans, and Capital Facilities Element of Comprehensive plans.	pg. 3-2 to 3-4	yes

I certify that the above statements are true to the best of my knowledge and that these specific elements are consistent with adopted local plans and development regulations.

Signature 12/22/2014 Date

Eric Shields, Planning Director, City of Kirkland
Printed Name, Title, & Jurisdiction

Consistency Review Guidance

For Use by Local Governments and Municipal Water Suppliers

This checklist may be used to meet the requirements of WAC 246-290-108. When using an alternative format, it must describe all of the elements; 1a), b), c), d), and e), when they apply.

For **water system plans (WSP)**, a consistency review is required for the retail service area and any additional areas where a municipal water supplier wants to expand its water right's place of use.

For **small water system management programs**, a consistency review is only required for areas where a municipal water supplier wants to expand its water right's place of use. If no water right place of use expansion is requested, a consistency review is not required.

For **engineering documents**, a consistency review is required for areas where a municipal water supplier wants to expand its water right's place of use (water system plan amendment is required). For non-community water systems, a consistency review is required when requesting a place of use expansion. All engineering documents must be submitted with a service area map per WAC 246-290-110(4)(b)(ii).

A) Documenting Consistency: Municipal water suppliers must document all of the elements in a consistency review per WAC 246-290-108.

1 a) Provide a copy of the adopted **land use/zoning** map corresponding to the service area. The uses provided in the WSP should be consistent with the adopted land use/zoning map. Include any other portions of comprehensive plans or development regulations that are related to water supply planning.

1 b) Include a copy of the **six-year growth projections** that corresponds to the service area. If the local population growth rate projections are not used, provide a detailed explanation on why the chosen projections more accurately describe the expected growth rate. Explain how it is consistent with the adopted land use.

1c) Include water service area policies and show that they are consistent with the **utility service extension ordinances** within the city or town boundaries. This applies to cities and towns only.

1 d) Include all **service area policies** for how new water service will be provided to new customers.

1 e) **Other relevant elements** related to water supply planning as determined by the department (DOH). See Local Government Consistency – Other Relevant Elements, Policy B.07, September 2009.

B) Documenting an Inconsistency: Please document the inconsistency, include the citation from the comprehensive plan or development regulation, and provide direction on how this inconsistency can be resolved.

C) Documenting Lack of Consistency Review by Local Government: Where the local government with jurisdiction did not provide a consistency review, document efforts made and the amount of time provided to the local government for their review. Please include: name of contact, date, and efforts made (letters, phone calls, and e-mails). In order to self-certify, please contact the DOH Planner.

The Department of Health is an equal opportunity agency. For persons with disabilities, this document is available on request in other formats. To submit a request, please call 1-800-525-0127 (TTY 1-800-833-6388).

APPENDIX J

SEPA Checklist

March 11, 2014

City Of Kirkland
123 5TH AVE
Kirkland, WA 98033

Dear CITY OF KIRKLAND

Subject: Environmental Determination, File Number SEP14-00238

The City has completed its environmental review of your application and has issued a Determination Of Nonsignificance for the proposed project (attached).

In accordance with local ordinance, the determination will be published in the Seattle Times on March 11, 2014.

Should you wish to appeal the SEPA determination, a written appeal must be submitted to the City by **5:00 p.m. March 25, 2014**. The appeal should include a concise statement of the matter being appealed, the specific components or aspects being appealed, the rationale for contention on appeal, and a statement of standing to appeal. The fee for appealing the Environmental Determination is $215.77.

Should you have any questions regarding this letter, please contact me at 425.587.3246, and refer to File Number SEP14-00238.

Sincerely,

PLANNING AND COMMUNITY DEVELOPMENT

Christian Geitz
Planner

Attachment: Environmental Determination

CITY OF KIRKLAND
123 FIFTH AVENUE
KIRKLAND, WA 98033-6189
425.587.3225

Determination Of Nonsignificance

CASE #: SEP14-00238

DATE ISSUED: March 11, 2014

DESCRIPTION OF PROPOSAL: Non Project Action for Adoption of 2014 Water Comprehensive Plan

APPLICANT: CITY OF KIRKLAND

PROJECT LOCATION: City Wide

LEAD AGENCY IS THE CITY OF KIRKLAND

The lead agency for this proposal has determined that it does not have a probable significant adverse impact on the environment. An environmental impact statement (EIS) is not required under RCW 43.21.030 (2) (c). This decision was made after review of a completed environmental checklist and other information on file with the lead agency. This information is available to the public upon request.

There is no comment period for this DNS.

Responsible Official: _____ 3/7/14
Eric Shields, Director — Date
Department of Planning and Community Development
425-587-3225

Address: City of Kirkland
123 Fifth Avenue
Kirkland, WA 98033-6189

You may appeal this determination to the Planning Department at Kirkland City Hall, 123 Fifth Avenue, Kirkland, WA 98033 no later than 5:00 p.m., March 25, 2014 by WRITTEN NOTICE OF APPEAL.

You should be prepared to make specific factual objections. Contact the Planning Department at 425-587-3225 to read or ask about the procedures for SEPA appeals.

Please reference case # SEP14-00238

Distribute this form with a copy of the checklist to the following:

Environmental Review Section
Department of Ecology
PO Box 47703
Olympia, WA 98504-7703

:

cc: Case # NA

Distributed to agencies along with a copy of the checklist (see attached).

Distributed By: _____ 3/11/14
Date:

CITY OF KIRKLAND
Planning and Community Development Department
123 Fifth Avenue, Kirkland, WA 98033
425.587.3225 - www.kirklandwa.gov

MEMORANDUM

To: Eric R. Shields, AICP
Planning Director

From: Christian Geitz, Assistant Planner

Date: March 7, 2014

Subject: Environmental Determination – SEP14-00238
2014 Water System Comprehensive Plan

Proposal:
The applicant, The City of Kirkland, is proposing the regular update to the Comprehensive Water System Plan. The applicant is proposing to update and improve the existing comprehensive plan. All future individual construction projects proposed under the Comprehensive Water System Plan will be reviewed through an independent SEPA review. The proposed development has been reviewed for compliance with all applicable codes and laws.

SEPA Determination:
I have had an opportunity to review the proposed plan and review the environmental checklist for the project referenced above. I have not identified any significant adverse environmental impacts. Therefore, I recommend that a Determination of Non-Significance be issued for this proposed action.

Should you have any questions, please contact me.

SEPA Enclosures:
1. Environmental Checklist
2. Comprehensive Water System Plan

Review by Responsible Official:
I concur ☑

I do not concur ☐

Comments: _____

Eric R. Shields, AICP
Planning Director

3/7/14
Date

CITY OF KIRKLAND
Planning and Community Development Department
123 Fifth Avenue, Kirkland, WA 98033
425.587.3225 - www.kirklandwa.gov

SEPA ENVIRONMENTAL DOCUMENTS

If an application for a land use or building permit is subject to environmental review under Chapter 43.21C RCW, all SEPA environmental documents must be submitted with the filing of a land use permit or building permit application or the City will not accept the application.

The following is a list of the environmental documents that must be submitted with the land use or building permit application:

1. **Environmental Checklist.** The checklist form can be obtained from the Kirkland Planning Department.
2. **Road concurrency test decision memo.** Applicants must pass road concurrency *before* submitting for a land use or building permit and the environmental documents. Concurrency application forms are available from Public Works or the Planning Departments. If the application passes road concurrency, the Public Works Department's Transportation Engineer will provide the applicant or applicant's traffic engineer with a concurrency test decision memo and traffic information that needs to be included in the Traffic Impact Analysis. A copy of this memo must be submitted to show that road concurrency has been passed.
3. **Traffic Impact Analysis.** Traffic Impact Analysis Guidelines can be obtained from the Planning or Public Works Departments. The Traffic Impact Analysis is to be completed after the road concurrency test has been successfully passed. Information from the City's Transportation Engineer is to be included in the Traffic Impact Analysis along with all other information specified in the guidelines.
4. **Other supplemental environmental information.** Ask the assigned planner at the pre-application meeting what other environmental information will be required with the environmental submittal. All studies and reports must be prepared by a licensed and qualified specialist in the field and approved by the City. Supplemental impact assessment reports or studies that may be required include, but not be limited to the following:

   - Lighting
   - Environmental health hazard
   - Historic
   - Wetland and/or stream delineation and analysis, prepared or reviewed by the City's consultant
   - Hydrology
   - Wildlife
   - Views
   - Noise
   - Geotechnical soils analysis

YOU ARE ENCOURAGED TO MEET WITH A PLANNER FROM THE DEPARTMENT OF PLANNING AND COMMUNITY DEVELOPMENT PRIOR TO AND DURING PROJECT DESIGN TO DISCUSS PROJECT DESIGN AND PROJECT COMPLIANCE WITH CITY REGULATIONS AND TO OBTAIN GUIDANCE ON THE ENVIRONMENTAL MATERIALS THAT YOU MUST SUBMIT.

Purpose of Checklist:

The State Environmental Policy Act (SEPA), Chapter 43.21C RCW, requires all governmental agencies to consider the environmental impacts of a proposal before making decisions. An environmental impact statement (EIS) must be prepared for all proposals with probable significant adverse impacts on the quality of the environment. The purpose of this checklist is to provide information to help you and the City identify impacts from your proposal (and to reduce or avoid impacts from the proposal, if it can be done) and to help the City decide whether an EIS is required.

Instructions for Applicants:

This environmental checklist asks you to describe some basic information about your proposal. Governmental agencies use this checklist to determine whether the environmental impacts of your proposal are significant requiring preparation of an EIS. Answer the questions briefly with the most precise information known, or give the best description you can.

You must answer each question accurately and carefully to the best of your knowledge. In most cases, you should be able to answer the questions from your own observations or project plans without the need to hire experts. If you really do not know the answer, or if a question does not apply to your proposal, write "do not know" or "does not apply." Complete answers to the questions now may avoid unnecessary delays later.

Some questions ask about governmental regulations, such as zoning, shoreline, and landmark designations. Answer these questions if you can. If you have problems, the City staff can assist you.

The checklist questions apply to all parts of your proposal, even if you plan to do them over a period of time or on different parcels of land. Attach any additional information that will help describe your proposal or its environmental effects. The City may ask you to explain your answers or provide additional information reasonably related to determining if there may be significant adverse impacts.

Use of Checklist for Non-project Proposals:

Complete this checklist for non-project proposals, even though questions may be answered "does not apply." IN ADDITION, complete the SUPPLEMENTAL SHEET FOR NON-PROJECT ACTIONS (Part D).

For non-project actions, the references in the checklist to the words "project," "applicant," and "property or site" should be read as "proposal," "proposer," and "affected geographic area," respectively.

A. BACKGROUND

1. Name of proposed project, if applicable: *2014 Water Comprehensive Plan Update*

2. Name of applicant: *City of Kirkland, Public Works Department*

3. Address and phone number of applicant and contact person: *N/A (City-wide right-of-way and other City property; Ray Steiger, 425.587.3801*

4. Date checklist prepared: *1/15/14*

5. Agency requesting checklist: *City of Kirkland, Department of Planning and Community Development*

6. Proposed timing or schedule (including phasing, if applicable): *The current Comprehensive Water Plan Update (Water System Plan, aka WSP) is scheduled to be complete in early 2014. The WSP addresses the policies, design criteria, and recommendations needed to construct, maintain, and manage the water system for the Agency's proposed land use as identified by the comprehensive land use plan. The WSP will be updated or supplemented on a regular basis as required by the Washington State Department of Health.*

7. Do you have any plans for future additions, expansion, or further activity related to or connected with this proposal? If yes, explain.

   Yes, the WSP is required to be updated on a 6-year renewal cycle. Any desired changes to the recommendations within the WSP will require a plan amendment. It is recommended that the next WSP update be completed in 2019 (funded to begin in 2018).

8. List any environmental information you know about that has been prepared, or will be prepared, directly related to this proposal.

   Each of the specific projects listed in the recommended Capital Improvement Program of the WSP is subject to SEPA regulations. While some projects will be categorically exempt, others will require a Determination of Non-Significance (DNS) and will require either a Mitigated Determination of Non-Significance (MDNS) or possibly an Environmental Impact Statement (EIS).

9. Do you know whether applications are pending for governmental approvals of other proposals directly affecting the property covered by your proposal? If yes, explain.

   None at this time.

10. List any government approvals or permits that will be needed for your proposal, if known.

    Washington State Department of Health, Kirkland City Council

11. Give brief, complete description of your proposal, including the proposed uses, the size and scope of the project and site including dimensions and use of all proposed improvements. There are several questions later in this checklist that ask you to describe certain aspects of your proposal. You do not need to repeat those answers on this page.

    This submittal is for a WSP to serve the City of Kirkland covering an area of approximately 9-square miles in size (the City's water service area). The WSP consists of several components in which policies, design criteria, assumptions, and recommendations for service areas are addressed. Elements of these service levels are public health, facility liability, operation and maintenance, and financial issues. Using these factors, the WSP outlines long range planning for infrastructure improvements including the replacement, repair or upgrading of conveyance systems and related facilities. The WSP includes a course of action to be used as a

resource in developing and updating the biennial Capital Improvement Program (CIP). Because the WSP is programmatic and only lists general recommendations or additions that do not have specific sites or scopes of work, this checklist does not address any specific projects or site specific conditions. The individual projects coming out of the WSP and their associated impacts will be reviewed later as engineering studies and scopes of work are developed and discussed in the SEPA review process.

12. Location of the proposal. Give sufficient information for a person to understand the precise location of your proposed project, including a street address, if any, and section, township, and range, if known. If a proposal would occur over a range of area, provide the range or boundaries of the site(s). Provide a legal description, site plan, vicinity map, and topographic map, if reasonably available. While you should submit any plans required by the agency, you are not required to duplicate maps or detailed plans submitted with any permit applications related to this checklist.

    The location covered by this WSP is the water service boundary of the City of Kirkland. Those portions of the City that are served by the Northshore Utilility District (NUD), or the Woodinville Water District are not included within the Kirkland WSP. The service area boundaries have been established by agreement and policy. .

EVALUATION FOR
AGENCY USE ONLY
REVIEWED BY:

B. ENVIRONMENTAL ELEMENTS

1. EARTH

a. General description of the site (circle one): Flat, rolling, hilly, steep, slopes, mountainous, other *Urban area composed of flat, hilly and steep slopes.*

b. What is the steepest slope on the site (approximate percent slope)? *Approx 45%*

c. What general types of soils are found on the site (for example, clay, sand, gravel, peat, muck)? If you know the classification of agricultural soils, specify them and note any prime farmland.

Based on the US Soils Conservation Service's soil survey for King County, the types of soils are Alderwood Association, Oridia-Seattle-Woodinville Association, the Beausite-Alderwood Association and the Everett Association.

d. Are there surface indications or history of unstable soils in the immediate vicinity? If so, describe.

Many areas on slopes of Lake Washington have been identified as having soil types that are susceptible to erosion. No landslide hazards have been identified within the service area.

e. Describe the purpose, type, and approximate quantities of any filling or grading proposed. Indicate source of fill.

No projects identified in the Plan are expected to require grading or filling of a site. All trench backfilling will be done with the native material taken from the trench unless it does not meet backfill standards. If native material is deemed un-suitable, import backfill material will be used. All imported backfill material will be addressed in the environmental review during specific project design phases.

f. Could erosion occur as a result of clearing, construction, or use? If so, generally describe.

There is a potential for erosion impacts during the construction of specific projects.

g. About what percent of the site will be covered with impervious surfaces after project construction (for example, asphalt, buildings)?

Water projects do not generally create impervious surfaces and if a specific project should add impervious surface it will be identified at the time of the review of that specific project.

h. Proposed measures to reduce or control erosion, or other impacts to the earth, if any:

Temporary erosion and sedimentation control plans, in conformance with City of Kirkland requirements, will be includes as part of the project design and specifications. On-site inspection will occur to monitor any potential erosion problems.

2. AIR

a. What types of emissions to the air would result from the proposal (i.e., dust, automobile, odors, industrial wood smoke) during construction and when the project is completed? If any, generally describe and give approximate quantities if known.

Potential for vehicular and equipment emissions may affect the ambient air quality for short periods of time during specific water system projects. These impacts will be addressed during the review process for the specific projects.

b. Are there any offsite sources of emissions or odor that may affect your proposal? If so, generally describe.

No

c. Proposed measures to reduce or control emissions or other impacts to air, if any:

Measures related to reducing or controlling emissions will be addressed during the review process for the specific projects.

3. WATER

a. Surface

1) Is there any surface water body on or in the immediate vicinity of the site (including year-round and seasonal streams, saltwater, lakes, ponds, wetlands)? If yes, describe type and provide names. If appropriate, state what stream or river it flows into.

Several streams dissect the service area, including Juanita Creek and Forbes Creek. Many wetland areas have also been identified within the service area and Lake Washington borders the City to the west, with Forbes and Totem Lakes also lying with in the service area.

2) Will the project require any work over, in, or adjacent to (within 200 feet) the described waters? If yes, please describe and attach available plans.

Any project identified within the WSO that is within 200 feet of the described waters will be addressed through the SEPA and Shoreline Permit review process specific to that project. It is the City's goal to avoid construction in or around wetlands, lakes or streams. It is, however, reasonable to anticipate that work on existing lines in the vicinity of wetlands, lakes or streams, or other engineering constraints may result in few alternative options for new construction. If work is required in or around wetlands, lakes or streams we will address the issue in the SEPA review for that specific project. Reasonable efforts will be made to maintain the integrity of, the restoration of and/or the replacement of all impacted wetland areas and buffers, as required by State and local regulations.

3) Estimate the amount of fill and dredge material that would be placed in or removed from surface water or wetlands and indicate the area of the site that would be affected. Indicate the source of fill material.

Any fill and dredged material that may be placed in or removed from surface water, streams or wetlands will be addressed in the SEPA review of individual projects. All City codes, as well as any outside agency requirements will be met as provided in any SEPA process.

4) Will the proposal require surface water withdrawals or diversions? Give general description, purpose, and approximate quantities if known. *No.*

5) Does the proposal lie within a 100-year flood plain? If so, note location on the site plan.

Portions of specific projects may be located within the 100-year flood plain. When applicable, these projects will address the issue in the SEPA review process specific to those individual projects. All City codes, as well as any outside agency requirements will be met, as provided for in the SEPA finding.

6) Does the proposal involve any discharges of waste materials to surface waters? If so, describe the type of waste and anticipated volume of discharge. *No.*

b. Ground

1) Will ground water be withdrawn, or will water be discharged to ground water? Give general description, purpose, and approximate quantities if known. *No.*

2) Describe waste material that will be discharged into the ground from septic tanks or other sources, if any (for example: Domestic sewage; industrial, containing the following chemicals...; agricultural; etc.) Describe the general size of the system, the number of such systems, the number of houses to be served (if applicable), or the number of animals or humans the system(s) are expected to serve. *N/A - none*

c. Water Runoff (including storm water):

1) Describe the source of runoff (including storm water) and method of collection and disposal, if any (include quantities, if known). Where will this

water flow? Will this water flow into other waters? If so, describe.

There will be no runoff that can be directly attributed to the adoption of this WSP or any completed project as described within the WSP. Any runoff that may occur during construction of a capital improvement project will be subject to City codes, as well as outside agency requirements identified in a specific project's SEPA finding.

2) Could waste materials enter ground or surface waters? If so, generally describe. *No.*

d. Proposed measures to reduce or control surface, ground, and runoff water impacts, if any:

Proposed measures to reduce or control surface, ground and run-off water impacts will be addresses in the SEPA review of individual CIP projects. All City codes, as well as any outside agency requirements will be met as provided for in the SEPA findings for specific projects.

4. PLANTS

a. Place an "X" next to the types of vegetation found on the site:

X	deciduous tree: alder, maple, aspen, other
X	evergreen tree: fir, cedar, pine, other
X	shrubs
X	grass
	pasture
	crop or grain
X	wet soil plants: cattail, buttercup, bullrush, skunk cabbage, other
X	water plants: water lily, eelgrass, milfoil, other
X	other types of vegetation

b. What kind and amount of vegetation will be removed or altered?

It is expected that localized impacts to vegetation could occur as a result of clearing to accommodate construction of proposed facilities. Any potential removal or alteration of vegetation will be addressed in the SEPA review of individual projects. All City codes will be followed and any necessary removal will be mitigated at the time of application.

c. List threatened or endangered species known to be on or near the site.

The presence of any threatened or endangered species will be addressed in the SEPA review of individual projects.

d. Proposed landscaping, use of native plants, or other measures to preserve or enhance vegetation on the site, if any:

Any potential landscaping, use of native plants or other measures to preserve or enhance vegetation on site will be addressed in the SEPA review of individual projects.

5. ANIMALS

a. What kinds of birds and animals have been observed on or near the site or are known to be on or near the site?

birds: *hawk, eagle, songbirds, other*
mammals: *deer, beaver, possum, other*
fish: *bass, salmon, trout*

b. List any threatened or endangered species known to be on or near the site.

Protected species such as bald eagles have been observed in the planning area. It is not expected that the proposed program would adversely impact these species over the long term. Short term construction related impacts may occur. These impacts would be discussed in the SEPA review of the specific projects and avoided wherever possible.

c. Is the site part of a migration route? If so, explain.

Yes – anadromous fish such as salmon and steelhead migrate through Lake Washington and into the lakes, tributaries and streams for spawning. Additionally, waterfowl such as Canadian geese stop at large wetland areas bordering Lake Washington during their seasonal migration.

d. Proposed measures to preserve or enhance wildlife, if any:

Any potential measures to preserve or enhance wildlife will be addressed in the SEPA review of individual projects. All City codes, as well as any outside agency requirements will be met as provided in the SEPA finding.

6. ENERGY AND NATURAL RESOURCES

a. What kinds of energy (electric, natural gas, oil, wood stove, solar) will be used to meet the completed project's energy needs? Describe whether it will be used for heating, manufacturing, etc.

Some facilities identified within the WSP will require electrical energy to run pumps and telemetry.

b. Would your project affect the potential use of solar energy by adjacent properties? If so, generally describe.

None of the proposed project facilities would cast shadows affecting adjacent surrounding properties.

c. What kinds of energy conservation features are included in the plans of this proposal? List other proposed measures to reduce or control energy impacts, if any:

All facilities will be constructed utilizing efficient energy use systems that will not affect safety or reliability.

7. ENVIRONMENTAL HEALTH

a. Are there any environmental health hazards, including exposure to toxic chemicals, risk of fire and explosion, spill, or hazardous waste, that could occur as a result of this proposal? If so, describe. *No*

1) Describe special emergency services that might be required.

The City's Public Works Department is on-call to address any emergency that may occur.

2) Proposed measures to reduce or control environmental health hazards, if any: *N/A*

b. Noise

1) What types of noise exist in the area which may affect your project (for example: traffic, equipment, operation, other)?

Existing noise will not affect construction or operations of projects proposed within the WSP.

2) What types and levels of noise would be created by or associated with the project on a short-term or a long-term basis (for example: traffic, construction, operation, other)? Indicate what hours noise would come from the site.

There will not be any noise associated with the adoption of the WSP. The projects identified in the WSP will have short term noise impacts associated with the construction process.

3) Proposed measures to reduce or control noise impacts, if any:

As projects are developed pursuant to the WSP the construction of those projects will meet all City codes including those regulating noise.

8. LAND AND SHORELINE USE

a. What is the current use of the site and adjacent properties?

Current land use within the planning area varies from business/commercial/industrial to single family and multi-family and multi-family residential to vacant land.

b. Has the site been used for agriculture? If so, describe.

Any project identified within this document that may be in an area used for agriculture will address through the SEPA review for that specific project. All City codes, as well as any outside agency requirements will be met as provided for in the SEPA finding.

c. Describe any structures on the site.

Structures vary throughout the planning area from residential to industrial, including single family, multi-family, commercial, retail, office and light manufacturing.

d. Will any structures be demolished? If so, what?

Demolition of structures before or during construction of any WSP identified project is not anticipated. If a structure must be demolished it will be addressed through the SEPA review for a specific project.

e. What is the current zoning classification of the site?

The WSP covers all areas of the City and involves all zoning within the City code.

f. What is the current comprehensive plan designation of the site?

Varies: commercial, residential, light industrial, park, other

g. If applicable, what is the current shoreline master program designation of the site?

The service area includes some properties within the SMP designation:
- *conservancy environment 1 and 2*
- *urban mixed 1 and 2*
- *urban residential 1 and 2*
- *suburban residential*

h. Has any part of the site been classified as an "environmentally sensitive" area? If so, specify.

Some of the projects identified within the WSP are in areas that may be classified as "environmentally sensitive" in categories such as soils, slopes, streams, lakes and wetlands. These projects will be addressed in the SEPA review of the individual project to determine the alternative with the least environmental impact. All City codes, as well as any outside agency requirements will be met as provided for in the SEPA finding.

i. Approximately how many people would reside or work in the completed project?

Presently, the City of Kirkland Water System services approximately 40,000 people. The WSP addresses water needs for full development under current comprehensive land use plans. When the study area identified in the Plan in fully developed we project approximately 45,000 people will be served.

j. Approximately how many people would the completed project displace?

None

k. Proposed measures to avoid or reduce displacement impacts, if any: *N/A*

l. Proposed measures to ensure the proposal is compatible with existing and projected land uses and plans, if any:

The WSP is prepared to be consistent with the City of Kirkland Comprehensive Plan and with the WSP for adjacent municipalities. The Public Works Department will maintain coordination with the Comprehensive Land Use Plan by updating or amending the WSP as needed. To ensure compatibility, the WSP will be reviewed by all applicable State agencies and adjacent utilities.

9. HOUSING

a. Approximately how many units would be provided, if any? Indicate whether high, middle, or low-income housing. *None*

b. Approximately how many units, if any, would be eliminated? Indicate whether high, middle, or low-income housing. *None*

c. Proposed measures to reduce or control housing impacts, if any: *N/A*

10. AESTHETICS

a. What is the tallest height of any proposed structure(s), not including antennas; what is the principal exterior building material(s) proposed?

The tallest structure anticipated within the WSP would be approximately three stories above ground level (retrofit of an existing municipal water storage tank).

b. What views in the immediate vicinity would be altered or obstructed?

No views would be altered or obstructed that are not currently impacted.

c. Proposed measures to reduce or control aesthetic impacts, if any:

If any projects identified within the WSP have aesthetic impacts they will be addressed in the SEPA review of that project. All City codes, as well as outside agency requirements will be met as provided in any SEPA finding.

11. LIGHT AND GLARE

a. What type of light or glare will the proposal produce? What time of day would it mainly occur?

No light or glare will be produced by the adoption of the WSP. The projects identified within the WSP may create temporary increases in ambient lighting during construction activities and some water system station may have security lighting.

b. Could light or glare from the finished project be a safety hazard or interfere with views? *No*

c. What existing off-site sources of light or glare may affect your proposal? *None*

d. Proposed measures to reduce or control light and glare impacts, if any:

Lighting will be focused and directed to mitigate any potential lighting impacts. If any lighting over 300 watts is used it will be shielded to prevent light and glare impacts on adjacent residents.

12. RECREATION

a. What designated and informal recreational opportunities are in the immediate vicinity?

The WSP identifies numerous proposed projects that will support recreational opportunities such as Parks facilities, community centers, school district play fields and private docks.

b. Would the proposed project displace any existing recreational uses? If so, describe.

The City does not anticipate any permanent impacts to existing recreational usages.

Some of the projects identified within the WSP may have temporary impacts such as access problems during construction.

c. Proposed measures to reduce or control impacts on recreation, including recreation opportunities to be provided by the project or applicant, if any:

Neither the adoption of the WSP, nor the construction of the projects identified, will have any permanent impacts on recreational opportunities. Some of the projects may have temporary impacts during construction or the potential for recreational enhancement. These items would be discussed in the SEPA review of individual projects. All City codes as well as any outside agency requirements will be met as provided in the SEPA finding.

13. HISTORICAL AND CULTURAL PRESERVATION

a. Are there any places or objects listed on, or proposed for, national, state, or local preservation registers known to be on or next to the site? If so, generally describe.

The service area contains several homes, buildings and/or sites on the National, State and/or local preservation registers. A list can be found in Table CC-1 in the Community Character Element of the Comprehensive Plan (page IV-5.)

b. Generally describe any landmarks or evidence of historic, archaeological, scientific, or cultural importance known to be on or next to the site.

To be determined during the SEPA review of individual projects.

c. Proposed measures to reduce or control impacts, if any:

Any measures that may be necessary to reduce or control impacts will be mitigated at the time individual projects are reviewed per SEPA requirements. If any evidence of historical, archaeological, scientific, or cultural importance is discovered, there will be a cessation of construction activity until a proper survey can be completed.

14. TRANSPORTATION

a. Identify public streets and highways serving the site, and describe proposed access to the existing street system. Show onsite plans, if any.

The transportation system within the service area consists of major transportation corridors, arterials, City streets and local access roads. The transportation corridors include Interstate 405 and SR 520. The City's water system is planned

and constructed, in the most part, to utilize public street rights-of-way and alleys.

b. Is site currently served by public transit? If not, what is the approximate distance to the nearest transit stop?

Yes – Transit service is available throughout the service area.

c. How many parking spaces would the completed project have? How many would the project eliminate? *N/A*

d. Will the proposal require any new roads or streets, or improvements to existing roads or streets, not including driveways? If so, generally describe (indicate whether public or private).

Projects identified within the will not require any new roadways. Construction impacts may make it necessary to make temporary improvements to accommodate access or to restore an existing roadway.

e. Will the project use (or occur in the immediate vicinity of) water, rail, or air transportation? If so, generally describe. *N/A*

f. How many vehicular trips per day would be generated by the completed project? If known, indicate when peak volumes would occur.

There will be temporary increases in vehicular trips during construction of specific projects identified in the WSP..

g. Proposed measures to reduce or control transportation impacts, if any:

If any of the projects identified have impacts to transportation such as detours or other measures, the impacts will be discussed in the SEPA Checklist submitted for those specific projects. All City codes, as well as any outside agency requirements, will be met as provided in the SEPA findings.

15. PUBLIC SERVICES

a. Would the project result in an increased need for public services (for example: fire protection, police protection, health care, schools, other)? If so, generally describe. *No*

b. Proposed measures to reduce or control direct impacts on public services, if any.

If any of the projects identified within the WSP have impacts on public services, they will be discussed in the SEPA Checklist submitted for those specific projects. All City codes, as well as any outside agency requirements, will be met as provided in the SEPA findings.

16. UTILITIES

a. What utilities (e.g.: electricity, natural gas, water, refuse service, telephone, sanitary sewer, septic system, other) are currently available at the site? *N/A*

b. Describe the utilities that are proposed for the project, the utility providing the service, and the general construction activities on the site or in the immediate vicinity which might be needed.

Please refer to A-12 above.

C. SIGNATURE

The above answers are true and complete to the best of my knowledge. I understand that the lead agency is relying on them to make its decision.

Signature: _____

Date Submitted: 2/10/14

D. SUPPLEMENTAL SHEET FOR NONPROJECT ACTIONS

(Do not use this sheet for project actions)

Because these questions are very general, it may be helpful to read them in conjunction with the list of the elements of the environment.

When answering these questions, be aware of the extent the proposal, or the types of activities likely to result from the proposal, would affect the item at a greater intensity or at a faster rate than if the proposal were not implemented. Respond briefly and in general terms.

1. How would the proposal be likely to increase discharge to water; emissions to air; production, storage, or release of toxic or hazardous substances; or production of noise?

   The WSP will not increase any discharge, emissions, production, storage, production of noise or release of toxic or hazardous substances per se. Potential concerns will be addressed in the SEPA review for specific projects contained within the WSP.

   Proposed measures to avoid or reduce such increases are: *N/A*

2. How would the proposal be likely to affect plants, animals, fish, or marine life?

   The WSP will not affect plants, animals, fish or marine life. Any concern of this nature will be addressed in the SEPA review for specific projects contained within the Plan.

Proposed measures to protect or conserve plants, animals, fish, or marine life are: *N/A*

3. How would the proposal be likely to deplete energy or natural resources?

The WSP will not deplete energy or natural resources. Any concern of this nature will be addressed in the SEPA review for specific projects contained within the Plan.

Proposed measures to protect or conserve energy and natural resources are: *N/A*

4. How would the proposal be likely to use or affect environmentally sensitive areas or areas designated (or eligible or under study) for governmental protection; such as parks, wilderness, wild and scenic rivers, threatened or endangered species habitat, historic or cultural sites, wetlands, floodplains, or prime farmlands?

The WSP will not affect environmentally sensitive areas or areas designated for government protection. Any concern of this nature will be addressed in the SEPA review for specific projects contained within the Plan.

Proposed measures to protect such resources or to avoid or reduce impacts are:

The construction of new facilities, as well as the redevelopment of existing facilities will be accomplished in a manner consistent with the protection of environmentally sensitive areas and with measures to mitigate any potential impacts. Any concern of this nature will be addressed in the SEPA review process on a project by project basis.

5. How would the proposal be likely to affect land and shoreline use, including whether it would allow or encourage land or shoreline uses incompatible with existing plans?

The City of Kirkland Comprehensive Plan was reviewed to ensure that this WSP is compatable with land and shoreline use. Kirkland supplies water (urban service) to areas designated urban or suburban areas, as per State requirements. Land or shoreline use designations are determined by the zoning process.

Proposed measures to avoid or reduce shoreline and land use impacts are:

The construction of new facilities, as well as the redevelopment of existing facilities, will be accomplished in a manner consistent with the avoidance or reduction of shoreline and land use impacts and with measures being employed to mitigate any potential impacts. Any concern of this nature will be addressed in the SEPA review process on a project by project basis.

6. How would the proposal be likely to increase demands on transportation or public services and utilities?

   The WSP provides a guideline to accommodate the increased demand for water service that is expected as the City develops, and it addresses the demand on the water infrastructure based increased density anticipated in the City of Kirkland Comprehensive Plan. Projects identified within the WSP will be phased by priority per the criteria set forth in the plan with emphasis on the rehabilitation and replacement of existing systems. Subsequent development beyond current growth targets that has an impact on public services will be required to provide the additional facilities to satisfy the demand.

   Proposed measures to reduce or respond to such demand(s) are:

   The WSP addresses the increased demand that will be put on the water utility by development in and around the City and is foreseen by the Kirkland Comprehensive Plan. As the Land Use Plan is updated, the WSP will also be updated.

7. Identify, if possible, whether the proposal may conflict with local, state, or federal laws or requirements for the protection of the environment.

   The WSP is in accordance with local, state and Federal law, and the requirements for the protection of the environment. It is required under Washington State Statute as RCW 70.116.

[Statutory Authority: RCW 43.21C.110. 84-05-020 (Order DE 83-39), § 197-11-960, filed 2/10/84, effective 4/4/84.]

APPENDIX K

Water Use Efficiency Plan

Cascade Water Alliance

2014 Water Efficiency Program

November 7, 2013

Program Purpose

Water efficiency helps ensure a reliable water supply, makes the most effective use of our current water supplies and protects fish and the environment. Using water as efficiently as possible now will help delay the need for costly and unnecessary infrastructure. Water efficiency has been a key component in Cascade's supply and demand strategy since its formation and is reflected in its mission statement, plans and goals. Northwest residents have a strong environmental stewardship ethic and expect public agencies to take actions to ensure healthy ecosystems and responsible resource management. Cascade currently provides nearly all water efficiency programs and services for its members.

Goals and Objectives

Cascade's adopted water use efficiency goal is 0.6 million gallons per day on an average annual basis and 1.0 million gallons per day on a peak season basis of cumulative savings from 2014 – 2019. Cascade's water efficiency program will achieve these goals and provide cost-effective savings and equitable benefits for members and customers.

Program Elements

Education and Outreach

- **Annual Leak Detection Program** – Mail toilet leak detection dye kit to all single-family residences during US EPA national "Fix-A-Leak-Week".
- **Classroom Education** – Provides water education presentations to local schools.
- **Road Shows** – Water efficiency booth at community events.
- **Cascade Gardener** – Provides free classes to teach residents sustainable gardening techniques and water efficiency.
- **Commercial Irrigation Evaluations** – Provides free evaluations of commercial sprinkler systems to find waste and inefficiency.
- **Irrigation Contractor Training** – Provides free English and Spanish classes to teach irrigation contractors proper water landscape management.
- Lake Washington Tech Environmental Horticultural Program – Inclusion of irrigation education into the school's program.
- Rainwater Harvesting – Provides education projects at local schools; also utilizes drip irrigation.

- School / Parks / Public Agency Staff Irrigation Training – Teaches staff proper irrigation management.

Hardware

- **Commercial Irrigation Upgrades** – Retrofit projects at multifamily and commercial sites to improve the efficiency of sprinkler systems.
- **Residential Fixture Installation** (Habitat for Humanity, Helping Hands, King County Housing Authority, Sustainable Works) – Provides high efficiency fixtures to existing programs.
- Commercial Fixture Installation (aerators, showerheads, pre-rinse spray valves) – Replaces old fixtures at schools, restaurants, businesses, and public facilities.
- King County Green Schools – Partners with county program to help interested schools attain Level 3 (Water) Certification.
- Online Water Efficiency Ordering – Provides free water efficiency items for residents and apartment complex owners.
- WaterSense New Homes – Partner with Built Green to provide incentives for builders to achieve WaterSense certification.

Standards

- High Performance New Homes – Regional effort by the Northwest Energy Efficiency Alliance to incorporate water and energy efficiency into the appraisal process of new homes.
- Member Planning Staff Training and Support – Development of new landscape and irrigation standards, training and support of member staff interested in implementing codes.
- WSNLA Environmental Horticultural Certification – Development of the water module component.

Monitoring, Evaluation and Outcomes

Reports – Vendors submit regular reports detailing the status of programs.

Evaluations – Attendees provide evaluations of classes, trainings and presentations.

Targets – Targets will be established for all applicable programs.

Messaging

The water efficiency program will be supported through Cascade's Outreach and Communication plan including the website, newspaper articles and ads.

Member Communication

Classroom Presentations, Events, Gardening Classes, Irrigation Training – Members are notified in advance of events, presentations and classes.

Project-Specific – Members are notified in advance of irrigation, rainwater harvesting or other projects and included on correspondence with customers.

Board reports – Water efficiency is included in the CEO's monthly report to the Cascade Board of Directors.

Bi-monthly Updates – Members are provided a written report every two months highlighting specific water efficiency projects and activities.

Bi-monthly Member Meetings

Quarterly Reports – Members are provided a quarterly report detailing the activities in their respective areas and the customers reached through the programs.

Annual Reports – Members are provided an annual report summarizing the water efficiency program accomplishments and savings achieved for the previous year.

Budget

$738,500

Staffing

1.5 FTE

CASCADE WATER ALLIANCE

Cascade Water Efficiency Program
2013 Annual Report

Summary

The 2013 Cascade Water Efficiency Program (program) saves approximately 60 million gallons of water, 1.7 million kilowatt hours of energy and 1 million pounds of avoided greenhouse gas emissions per year. The program benefitted thousands of residents, businesses, schools and public agencies through a variety of education and outreach, training, and retrofit actions. The program provided the requisite water efficiency measures and savings goals for Cascade members to meet their state-mandated water use efficiency requirements. Additionally, by centralizing water efficiency programs and activities within Cascade, members have been relieved of most administrative tasks and expenses associated with operating independent programs. Cascade employs 1.5 full-time employees to manage the program, and total program expenses in 2013 were $558,390, including materials, services, and salaries.

2013 Cascade Water Efficiency Program		
Measure or Activity	**Items Installed or Distributed / Actions Completed**	**Savings (Gallons Per Day)**
Hardware		
Leak Detection Mailer	86,279	110,492
Web Page Items	369	369
Road Shows Items	5,365	5,365
Multifamily Showerheads	596	2,682
Multifamily Bathroom Aerators	580	1,334
Multifamily Kitchen Aerators	556	1,279
Commercial Aerators	761	32,723
Commercial Showerheads	192	3,373
PreRinse Spray Valves	50	6,850
Irrigation Upgrade Rebates	8	1,600
Total Savings		**166,068**
Education and Outreach		
Irrigation Evaluations	4	
Rainwater Harvesting Projects	3	
Commercial Indoor Water Audit	1	
Savvy Gardener Classes	37	
Gardener Class Attendees	828	
Garden Tours	2	
Classroom Presentations	297	
Students Reached	7,475	
Community Events Attended	15	
Customer Interaction (est.)	2,200	
Business / Facility Interaction (est.)	100	

Demand

Despite regional growth and an improving economy, Cascade's 2013 demand remained relatively flat compared to previous years, reflecting the gains in water efficiency, pricing, and customer awareness. The summer of 2013 was exceptionally dry, yet peak season demand (June – Sept.) from the Seattle system was a modest 35.3 million gallons (mg) per day. By comparison, peak season demand in 2003 was 38.3 mg.

Cascade Demand (Seattle System)			
Daily Average in Million Gallons			
	Annual		Peak Season
2012	26.2		32.9
2013	26.3		35.3
2003 – 12 (ave.)	26.4		36.1

Relationship to Long-Term Objectives

Cascade's program strives to lower regional water demand, particularly peak season demand, over time so that Cascade may delay or defer development of the White River / Lake Tapps Project or other sources of additional water supply. By utilizing existing water supplies more efficiently, Cascade will save millions of dollars for its members (and their ratepayers), leave more water in streams for fish, and reduce the region's carbon footprint through decreased energy usage involved in the treatment, transmission and heating of drinking water.

Water Efficiency Goal

Cascade obtained approval from the Washington Department of Health to use an alternate approach to the state's Water Use Efficiency Rule (rule) requirements that

allow Cascade to relieve its members of certain administrative tasks relating to the rule, such as establishing and achieving individual savings goals and holding public hearings to receive input on the proposed goals. Members no longer have to hold public hearings or adopt and achieve independent savings goals. In October, Cascade adopted a single, regional water efficiency savings goal on behalf of all its members for the planning period 2014 – 19. The new goal is a cumulative savings of 0.6 mg per day on an annual basis and 1.0 mg per day on a peak season basis by 2020. Instead of the traditional public hearing process to gather information to help craft a savings goal, Cascade developed a survey tool to obtain information that is used in establishing a savings goal. Cascade received approximately 375 responses to the survey and used the information to develop its 2014 program.

Youth Education

In 2013, Cascade provided 297 water education programs to 7,475 students at schools within all Cascade member service areas. Cascade offers fourteen programs designed to help schools meet state Science, Technology, Engineering and Mathematics (S.T.E.M.) requirements. All programs include water efficiency concepts and brand Cascade and its members. Program evaluations provided by teachers are very positive, and many schools register for programs months in advance.

"Thank you so much to Cascade Water Alliance and the City of Redmond. We learned a lot and had a blast!". – Monique Celeste, Audubon El.

"The program is a strong supplement to our science curriculum". – Jenny Ferries, Puesta Del Sol El. (Bellevue).

Savvy Gardener

Cascade partnered with Seattle Public Utilities for a second year to bring the Savvy Gardener program to local residents. This program uses expert instructors to teach gardeners how to have beautiful landscapes without excessive water and chemicals. Cascade provided 37 classes for 828 residents at venues in all member areas.

Irrigation Efficiency Projects

Cascade completed several irrigation efficiency projects with commercial and multifamily customers. Previous irrigation efficiency projects completed by Cascade have resulted in customers reducing their irrigation water use by hundreds of thousands of gallons per season. Program participants included:

- King County Library (Issaquah)
- Gateway Office Park (Tukwila)
- Providence Point (Sammamish Plateau)
- Harmony Apartments (Bellevue)
- The Lakes Apartments (Bellevue)
- Village on Main Apartments (Bellevue)
- Virginia Mason (Bellevue, Issaquah)
- Bellevue City Hall and Wilburton Park
- Meadows Apartments (Issaquah)
- Bellevue College

Irrigation Efficiency Training

Cascade provided free training for businesses and other organizations to help their staff become better water managers. Program participants included:

- Sound Transit
- PSE Resource Conservation Managers
- Bellevue School District
- King County Master Gardeners
- City Rain Landscape
- City People's Landscape and Irrigation

Cascade produced a series of four free trainings open to all members of the local landscape and irrigation industry. The courses were offered in English and Spanish and were designed for industry professionals. The trainings were held at the 21 Acres agricultural center in Woodinville with a total attendance of 99 staff representing 25 companies.

"The classes which Cascade Water Alliance has provided have been highly informative and full of very valuable information, which I am able to use on a daily basis and pass on to my co-workers and employees." Dan Brossard, Area Supervisor, Northwest Landscape Services.

Irrigation Standards

Cascade had significant participation in the development of Washington's new ecoPRO Sustainable Landscape Certification Program. The program was created by the Washington State Nursery and Landscaping Association, with the assistance of Cascade and many other entities. ecoPRO is a unique, statewide certification program that establishes a high bar for professional landscapers who wish to demonstrate they have the skills and knowledge to design and manage landscapes in an environmentally sensitive manner, including the efficient use of water.

"I would like to extend a personal thank you to Cascade Water Alliance for its ongoing support and involvement in the development of the new ecoPRO sustainable landscape professional certification program, specifically with regards to our Conserve Water domain." Breanne Chavez, Executive Director, WA State Nursery & Landscape Association

Cascade provided recommendations to Sound Transit's proposed landscape and irrigation specifications for its planned facilities to help them design and construct more sustainable, water efficient landscapes.

Cascade Road Shows

Cascade participated in 15 community festivals and events in 2013. All members were represented and Cascade interacted with approximately 2,200 residents distributing 5,365 conservation items and answering questions about water supply and water efficiency. The following events were attended:

- Tukwila Backyard Wildlife
- Bellevue Strawberry Festival
- Issaquah Farmers Market
- Kirkland Farmers Market (2)
- Redmond Derby Days
- Bellevue Farmers Market (2)
- Sammamish Days
- Sustain-Fest (Redmond)
- Mercer Slough Environmental Education Center
- Issaquah Salmon Days
- Skyway West Hill Association
- Bellevue Resource Management Event
- Trends Conference (State Convention Center)

Cascade at Redmond Derby Days

Commercial Fixture Installation

Cascade installed 1,004 high efficiency showerheads, faucet aerators and pre-rinse spray valves at 78 businesses and public

facilities such as the Lakeside Bistro in Skyway, Northwest University in Kirkland, and the Tukwila Community Center. The program installs high efficiency products that save customers money, water, and energy.

Leak Detection Mailer

In recognition of national *Fix A Leak Week,* which takes place in March of each year, Cascade sent its annual leak detection mailer with toilet detection dye to all single-family homes in member areas to encourage residents to check their toilets for leaks and repair them. More than 86,000 homes received the mailers, which are customized for each Cascade member. Previous customer surveys indicate that 4,000 – 5,000 homeowners find and repair leaking toilets in response to Cascade's annual mailer.

Multifamily Efficiency

In addition to irrigation evaluations, Cascade provided free showerheads, aerators, and toilet leak detection dye for apartment complexes. Cascade shipped nearly 2,000 water efficiency items to customers, such as Timberwood Apartments in Bellevue.

Real Estate Appraiser Training

The Northwest Energy Efficiency Alliance is developing an education program to train real estate appraisers to more accurately value energy efficiency in residential homes. Cascade was asked to participate in the project to incorporate water efficiency into the training. Cascade presented in two webinars in 2013 explaining selected water efficiency measures, the US EPA WaterSense program, and drip irrigation.

Rainwater Harvesting

Cascade worked with Endeavour Elementary (Sammamish Plateau), The Little School (Bellevue), and the Redmond YWCA to design and install rainwater harvesting and drip irrigation systems that provide water for their community gardens. The systems are solar powered and illustrate the potential for using alternate sources of water and maximum water efficiency through drip irrigation.

Water / Energy Nexus

Cascade developed a savings calculator that shows the energy saved and avoided greenhouse gas emissions resulting from Cascade's water efficiency measures. With this tool, Cascade can provide its members with information to incorporate into their climate action or energy conservation plans and show customers additional benefits from taking action to increase water efficiency.

Website Ordering

Cascade offers free water efficiency items, such as showerheads, shower timers and rain gauges, to homeowners in its member service areas through its website (cascadewater.org). The ordering process is easy, and the items are shipped to the customer's door. Cascade provided 369 items to residents in 2013.

APPENDIX L

Cross-Connection Control Program

Cross-Connection Control Program

INTRODUCTION

A cross-connection control (CCC) program is a proactive and ongoing effort of a water purveyor to protect the health of its customers by preventing contamination and pollution of the municipal water supply through cross-connection. A cross-connection is any physical connection, actual or potential, between a water system and any source of non-potable substance. All public water systems in Washington State are required to implement a CCC program. The purpose of a purveyor's CCC program shall be to protect the public water system from contamination via cross-connections. All required elements of a local CCC program must be documented and included in either the Comprehensive Water System Plan (applicable to the City of Kirkland (City)) or Small Water System Management Program document (not applicable to the City). Although general CCC rules have been in effect for over 20 years, the State mandate for the CCC program and the required elements of the CCC program are contained in WAC 246-290-490, Cross-Connection Control, which became effective in April 1999. The following are the minimum required elements of a CCC program.

- Adopt a local ordinance, resolution or code that establishes the purveyor's legal authority, describes operating policies and the corrective actions of a CCC program.
- Develop and implement procedures and schedules for evaluating new and existing service connections to assess hazards.
- Develop and implement procedures and schedules that eliminate or control cross-connections and ensure approved backflow preventers are properly installed.
- Ensure that personnel, including one certified Cross-Connection Control Specialist (CCS), are provided to develop and implement the CCC program.
- Develop and implement procedures to ensure approved backflow preventers are properly inspected and tested.
- Develop and implement a backflow prevention assembly testing quality control assurance program.
- Develop and implement procedures for backflow incident response.
- Include CCC program information in customer education materials.
- Develop and maintain CCC program records.
- Meet any additional CCC requirements if reclaimed water is distributed or received in the water service area.

PURPOSE AND SCOPE

This document establishes the minimum standards for the City to protect the public water supply from possible contamination from backflow. This document also describes minimum CCC program operating policies, and provides guidelines for installation, testing and maintenance of approved backflow assemblies. In addition, permitting and inspection requirements for existing and new backflow prevention assemblies are described. The document concludes with recommendations that the City is advised to address in order to comply with the updated CCC program requirements.

AUTHORITY

The Federal Safe Drinking Water Act of 1974 and the statutes of the State of Washington Title 43 RCW require purveyors to protect the public water systems from contamination. In addition, WAC 246-290-490 establishes CCC program requirements for the State. In Washington State, the Department of Health (DOH) is the lead agency for the development and administration of the State's CCC program. The City adopted the 2003 Uniform Plumbing Code (UPC) and its Washington State amendments with Kirkland Municipal Code (City Code) 21.24.010. The 2003 UPC contains cross connection control requirements, by adopting the UPC, the City adopted these CCC elements.

RESPONSIBILITY

The City is responsible for protecting its public water supply from contamination due to backflow of pollutants through water service connections. If the City determines that a backflow prevention assembly is necessary at a customer's premise, the City will notify the customer to install an approved backflow assembly. Installation of said backflow assembly shall be a condition of continued water service from the City. Upon installation, the customer shall arrange for inspection and testing of said assembly. The customer will be responsible for all applicable testing and inspection fees.

FAILURE TO COMPLY

Any person, firm or corporation who violates any of the provisions of this document or future CCC resolutions may be punished in accordance with the City Code. Any person, firm or corporation who violates any provisions and requirements of this document shall be subject to the discontinuance of supply of City water to its premise. Discontinuance of the City's potable supply to the premise shall remain in effect until corrective action, as required by the City, is completed, tested and approved.

CROSS-CONNECTION CONTROL PROGRAM

The City has implemented some of the required elements of the CCC program as listed above. This document will describe the City's current CCC program and will also discuss areas that the City needs to address in order to comply with the CCC program requirements. The City is committed to protecting the public water supply from contamination by eliminating potential cross-connections.

The City's CCC program that follows includes a statement of its goals and objectives, the evaluation of CCC elements, the program implementation schedule and recommendations.

CCC Program Goals and Objectives

The goals and objectives of the City's CCC Program consist of:

- Preventing contamination or pollution of the public water supply by eliminating or properly protecting actual or potential cross-connection;
- Taking inventory of all potential cross-connections; and
- Maintaining the inspection and testing program for all backflow prevention assemblies. Inspections shall include backflow prevention assembly installations, annual inspections of air gaps and annual surveys of high-hazard facilities. The City will notify customers when testing is due.

The City will achieve these goals and objectives through the implementation of the CCC program that follows.

Evaluation of CCC Program Elements

The City is required to develop and implement a CCC program. All required elements of a local CCC program must be documented and included in the City's Comprehensive Water System Plan. The evaluation of the CCC program elements and current level of implementation are presented below.

Cross-Connection Control Resolution

CCC resolution requires that the purveyor "adopt a local ordinance, resolution, code, bylaw, or other written legal instrument" outlining the purveyor's program. In addition, this document must establish the purveyor's legal authority to implement a CCC program. Operating policies, technical provisions and corrective actions of the CCC program must also be addressed in the legal document. The City adopted a formal CCC program with Section 21.24.010 of the Kirkland Municipal Code. This document updates the City's CCC program in order to comply with the WAC 246-290 requirements.

The City has adopted a CCC resolution, with City Code 21.24.010 that establishes the City's authority in implementing a cross-connection program. The City will update the resolution in 2013 to address the regulation in WAC 246-290 and the current CCC program contained in this document.

Evaluation of Service Connections

Purveyors must develop and implement procedures for evaluating new and existing service connections to assess the risk of connecting the consumer's premises to the City's public water system. Purveyors are required to notify the consumer within a reasonable time frame of the evaluation results. New connections are required to be evaluated prior to service. Existing connections shall be inspected on a schedule acceptable to the DOH.

The City has an established procedure for evaluating new service connections for potential cross-connection. This risk assessment evaluation is performed during the building permit or utility service agreement application review process for new water service applicants. Existing customers are evaluated during the building permit review process for structure alterations or additions and during the business license review process. If a backflow assembly is required as a result of this evaluation, the assembly, owner's name, property address, and other pertinent information is recorded in a database that is maintained by the City. The City has developed and implemented an evaluation program that assesses the risk of existing water service connections. Potential high-risk cross-connection premises are evaluated first. The City will then evaluate other premises, based on potential risk to the water system and budget availability. The evaluation program for existing connections was implemented in 2007.

Table 1 lists standard abbreviations for backflow prevention assemblies. These abbreviations will be used in the tables that follow.

Table 1
Abbreviations

Abbreviation	Description	Level of Protection
AG	Air Gap	1
RPBA	Reduced Pressure Backflow Assembly	2
RPDA	Reduced Pressure Detector Assembly	2
DCVA	Double Check Valve Assembly	3
DCDA	Double Check Detector Assembly	3
PVBA	Pressure Vacuum Breaker Assembly	4
AVB	Atmospheric Vacuum Breaker	5
SVB	Spill Resistant Vacuum Beaker	5

Table 2 lists the premises that are required to have isolation by an air gap or reduced pressure backflow assembly to prevent contamination to the public water system. **Table 3** shows various facilities that require or recommend backflow prevention devices.

Table 2
Premises Requiring Mandatory Service Isolation by AG or RPBA

Premises	Premises
Agricultural (farms and dairies)	Mortuaries
Beverage Bottling Plants	Nursing Homes
Car Washes	Petroleum Processing or Storage Plants
Chemical Plants	Piers and Docks
Commercial Laundries	Radioactive Material Processing Plants
Premises with Potable and Reclaimed Water	Nuclear Reactors
Film Processing Facilities	Survey Access Denied or Restricted
Food Processing Plants	Wastewater Lift Stations
Hospitals and Medical Centers	Wastewater Treatment Plants
Laboratories	Unapproved Auxiliary Supply
Metal Plating Industries	

Currently, the City requires RPBAs at industrial facilities, DCVAs at commercial facilities, DCVAs at multi-family buildings greater than or equal to three stories, and DCVAs or AVBs for irrigation and DCVAs for fire sprinkler systems.

Table 3
Backflow Protection Requirements and Recommendations

Required Service Isolation
Premises with Approved Auxiliary Supply
Premises with Fire Sprinkler Systems or Private Hydrants
Tall Buildings (Over 30 feet)
Recommended Service Isolation
Mobile Home Parks
Shopping Centers

Table 4 lists fixtures, equipment and areas that have the potential to contaminate the public drinking water system. The table also shows the minimum protection required by the City to prevent such contamination.

Table 4
Fixtures, Equipment and Areas with Backflow Potential

Fixtures, Equipment and Areas	Protection	Fixtures, Equipment Areas	Protection
Air Compressors	DCVA	Janitor Sinks	AVB
Air Conditioning Systems	RPBA	Kitchen Equipment	AVB
Air Washers	RPBA	Laboratory Equipment	RPBA
Aquarium Make-Up Water	AG/RPBA	Laundry Machines, Commercial	RPBA
Aspirators, Medical	AVB	Lavatories	AVB
Aspirators, Vault Drain	RPBA	Livestock Drinking Tanks	DCVA
Aspirators, Weedicide/Herbicide/Pesticide	RPBA	Make-Up Tanks	AG/RPBA
Autoclaves	RPBA	Mobile Carpet Cleaners	RPBA
Autopsy Tables	RPBA	Mop Sinks	AVB
Baptismal Fountain	RPBA,AG/AVB	Outboard Motor Test Tanks	AG/RPBA
Bathtub, Below Rim Filler	Not Allowed	Perchlorethylene Reclaim	AG/RPBA
Bedpan Washers	RPBA	Pesticide Applicator Trucks	AG/RPBA
Beverage Dispensers using C02	RPBA	Photo Developing Tanks and Sinks	RPBA
Bidets	AVB/AG-Internal	Photostat Equipment	RPBA
Boat Lifts	RPBA	Pipette Washers	AVB
Boiler Feed Lines	AG/RPBA	Potato Peelers	AVB
Bottle Washing Equipment	RPBA	Poultry Feeders	RPBA
Box Hydrants	DCVA	Private Hydrants	DCVA
Brine Tanks	AG/DCVA	Processing Tanks	AG/RPBA
Can Washing Equipment	RPBA	Pump Seal Water	AG/RPBA
Chemical Feeder Tanks	AG/RPBA	Pumps, Pneumatic Ejector	RPBA
Chilled Water Systems	RPBA	Pump Prime Lines	RPBA/DCVA
Chlorinators	RPBA	Pumps, Water Operated Ejector	RPBA
Coffee Urns	AG/AVB	Radiator Flushing Equipment	RPBA
Computer Cooling Lines	AG/RPBA	Recreational Vehicle Dump Stations	RPBA
Condensate Tanks	AG/RPBA	Serrated Faucets	AVB
Cooking Kettles	AG/AVB	Service Sinks	AVB
Cooling Towers	AG/RPBA	Sewer Connected Equipment	AG
Decorative Ponds	AG/RPBA	Sewer Flushing	AG
Degreasing Equipment	RPBA	Shampoo Basins/Hose Rinse	AVB
Demineralized Water System	RPBA	Showers, Telephone	AVB
Dental Cuspidors	RPBA	Sitz Baths	AVB
Detergent Dispensers (Dishwasher)	AVB	Soap Mixing Tanks	AG/RPBA
Dialysis Equipment	RPBA	Solar Heating Systems	RPBA
Dishwashers	AVB	Solution Tanks	AG/RPBA
Drinking Fountains	AG	Spas	AG/RPBA
Dye Vats and Tanks	AG/RPBA	Specimen Tanks	AG/RPBA
Dynamometers	DCVA	Starch Tanks	AG/RPBA
Emergency Generators	RPBA	Stream-Air Sprays	RPBA
Etching Tanks	AG/RPBA	Steam Cleaners	RPBA
Fermenting Tanks	AG/RPBA	Steam Ejectors	RPBA
Fertilizer Injection Equipment	RPBA	Steam Generating Facilities	RPBA
Film Processors	RPBA	Sterilizers	RPBA
Fire Department Connections w/o chemicals	DCVA/DCDA	Stills	RPBA
Fire Department Connections with chemicals	RPBA/RPDA	Sumps	AG
Fire Sprinkler Systems w/o chemicals	DCVA/DCDA	Swimming Pools	AG/RPBA
Fire Sprinkler Systems with chemicals	RPBA/RPDA	Toilets (Internal)	AG
Floor Drains	AG	Trap Primers	AG
Flushing Floor Drains	AVB	Ultrasonic Baths	AG
Foamite Systems	RPBA/RPDA	Urinals (Internal)	AG
Fountains, Ornamental	AG/RPBA	Used Water Systems	RPBA
Fume Hoods	RPBA	Vats	AG/RPBA

Continued on Next Page

Table 4 (Continued)
Fixtures, Equipment and Areas with Backflow Potential

Table Continued			
Garbage Can Washers	RPBA	Washing Pools	AG/RPBA
Garbage Disposals	RPBA	Wall Hydrants	AVB
Heat Exchangers	RPBA	Wash Basins	AG/AVB
Heat Pumps	RPBA	Wash-Up Sinks	AG/AVB
High Pressure Washers w/o chemicals	DCVA	Wash Tanks	AG/RPBA
High Pressure Washers with chemicals	RPBA	Wastewater Lines	AG
Hose Bibs	AVB	Water-Air Sprays	DCVA
Hoses, Kitchen Rinse	AVB	Water Closets (Internal)	AG
Hot Tubs	AG/RPBA	Water Cooled Equipment	RPBA
Hot Water Heating Systems	RPBA	Water Ejectors	RPBA
Hot Water Boilers	RPBA	Water Recirculating Systems	DCVA
Humidifier Tanks and Boxes	AG	Water Settling	RPBA
Hydraulically Operated Equipment	RPBA	Water Treatment Tanks	AG/RPBA
Hydrotherapy Baths	RPBA	Water Trucks	AG/DCVA
Ice Makers	RPBA	Wet Vacuum Systems	RPBA
Industrial Fluid Systems	RPBA	Whirlpool Baths	AVB/DCVA
Interties (Looped) Water Systems	DCVA	Windshield Washer Fluid Aspirators	RPBA
Irrigation Systems w/o chemicals	DCVA	X-Ray Processors	RPBA
Irrigation Systems with chemicals	RPBA	Yard Hydrants	RPBA

Table 5 summarizes the number of each type of backflow prevention assembly protecting the distribution system as of March 2012.

Table 5
Summary of Backflow Prevention Assemblies

Type of Device	Quantity
AG	0
RPBA	546
RPDA	0
DCVA	2734
DCDA	13
PVBA	6
AVB	0
SVB	6
Other	10

Cross-Connection Control and Elimination

Purveyors are required to eliminate existing cross-connections wherever possible. If elimination is not possible, then approved backflow prevention assemblies should be installed properly by a certified CCC specialist to reduce the risk of contamination in each of the following circumstances.

- If the nature and extent of any activity on the premises, the material used in connection with any activity on the premises, or the materials stored on the premises, could contaminate or pollute the drinking water supply in any way.
- On premises having one or more cross-connections.
- Internal cross-connections that are not correctable, or intricate plumbing arrangements that make it impractical to ascertain whether or not cross-connections exist.
- A repeated history of cross-connections being established or re-established.
- Unduly restricted entry so that inspections for cross-connections cannot be made with sufficient frequency or with sufficient notice to assure that cross-connections do not exist.
- Materials of a toxic or hazardous nature being used such that, if back siphoning should occur, a health hazard could result.
- Any mobile apparatus which uses water from the system or water from any premises within the system service boundaries.
- Any irrigation system.
- Any fire service and/or fire sprinkler.
- All new construction, remodels, commercial, business, industrial and private homes shall be evaluated to determine the necessity of an approved assembly.
- On any premise where installation of an approved assembly is deemed to be necessary to accomplish the purpose of these regulations in the City's judgment.
- On any premise where an appropriate cross-connection report has not been filed with the City.

The City will endeavor to eliminate cross-connection where possible. In addition, owners shall be responsible for the elimination or protection of all cross-connections on their premises. The City will continue to maintain an inventory of existing backflow assemblies that it currently operates, maintain, and inspects. A separate inventory will include all assemblies on customers' premises that are the responsibility of the customer to maintain. The City will keep these inventories on file at the administrative offices, and shall update the inventory as necessary.

The City shall continue to eliminate potential cross-connections at existing facilities and require installation of backflow assemblies at all premises deemed to be "high-risk," such as water service connections at sewage facilities. Once potential "high-risk" cross-connections are eliminated, the City will concentrate its efforts on reducing potential medium- and low-risk cross-connections.

Installation Requirements

To ensure proper operation and accessibility of all approved assemblies, the following requirements shall apply to the installation of these devices.

- No part of the approved assembly shall be submerged under water or installed on a location subject to flooding. If installed in a vault or basement, adequate drainage shall be provided.
- Approved assemblies must be installed at the point of use. Alternate locations must be approved in writing by the City prior to installation.
- The approved assembly must be protected from freezing and other severe weather conditions.

- All approved assemblies installed shall be of a type and model pre-approved by the DOH and the City.
- The approved assembly shall be readily accessible with adequate room for maintenance and testing. Approved assemblies 2 inches and smaller shall have a minimum clearance of 6 inches on all sides of the device. Approved assemblies larger than 2 inches shall have a minimum clearance of 12 inches on the back side, 24 inches on the test cock side, 12 inches plus the nominal size of the assembly below the device and 36 inches above the assembly.
- If the approved assembly is installed inside a building, the assembly shall be readily accessible at all times and an emergency after hours contact phone number and person shall be provided to the City.
- If the approved assembly is installed inside a building and it is installed 5 feet above the floor, it must be equipped with rigidly and permanently installed scaffolding acceptable to the City. This installation must also meet the requirements set forth by the U.S. Occupational Safety and Health Administration and the State of Washington Occupational Safety and Health Codes.
- Reduced pressure principle assemblies may be installed in a vault only if the relief valve discharge can be drained to daylight through a "boresight" type drain. The drain shall be of adequate capacity to carry the full rated flow of the assembly and shall be screened at both ends. An approved air gap shall be located at the relief valve orifice. This air gap shall be at least twice the inside diameter of the incoming supply line as measured vertically above the top rim of the drain and in no case less than 1 inch.
- Where an approved assembly is deemed necessary, the model of the assembly and installation plans shall be submitted to the City for approval prior to installation.
- Upon completion of the installation, the City shall be notified and an inspection will occur for approval of the installation. All approved assemblies must be registered with the City. Registration shall consist of installation, make, model and serial number of the assembly, and an initial test report.
- If any user refuses access to a premise, or to the interior of a structure, at reasonable times and with reasonable notice for inspection by the City, an RPBA will be required to be installed at the service connection to that premise.

Any variances from these installation requirements shall be requested in writing by the owner and must be approved by the City prior to installation.

The City will continue to enforce these installation requirements.

Personnel Certification

WAC 246-290-490 requires that personnel, including one certified Cross-Connection Control Specialist (CCS), are provided by the purveyor to develop and implement a CCC program. **Table 6** shows the City's personnel certifications. Mr. Steve Ensminger and Ms. Karla Holmes are both certified as Cross-Connection Control Specialists.

The City has the properly certified staff to implement and maintain a CCC program as outlined by the State. The City will continue to provide properly certified personnel to implement the CCC program.

Table 6
Personnel Certification

Name	Position	Certificate Number	Certification
Greg Neumann	Water Division Manager	10754	WDM-3
Steve Ensminger	Water Division Lead	5057	WDM-2, CCS, Asbestos Abatement
Joe Brown	Senior Maintenance Worker	6320	WDS-2
Steve Hoopes	Senior Maintenance Worker	N/C	N/C
Karla Holmes	Utility Craftsperson	4914	WDM-1, CCS
Gianni Mallamo	Utility Craftsperson - Meter Reader	N/C	N/C
Trevor Kirschenmann	Utility Worker	N/C	N/C
Jesse Byrd	Utility Worker	N/C	N/C
Gary Chase	Utility Worker	N/C	N/C
Duane Thress	Utility Worker	N/C	N/C
Kim Blackketter	Utility Worker	9526	WDM-1

Certification Definitions
WDM - Water Distribution Manager
WDS - Water Distribution Specialist
CCS - Cross Connection Control Specialist
N/C - None Currently

Backflow Assembly Inspection and Testing

The DOH requires that all backflow assemblies are routinely inspected and tested by certified personnel. Inspections are required at the time of installation, annually thereafter, after a backflow incident, and/or after the assembly is repaired, reinstalled or relocated. All assemblies found functioning improperly shall be promptly repaired or replaced by the owner. If any such assembly is not promptly repaired or replaced, the City may deny or discontinue service to the premise.

The City is responsible for administering those assemblies that are installed on the public water distribution system, not including those assemblies installed after a meter on private premises. For assemblies installed on customers' premises, the customer shall arrange for testing of said assemblies by a backflow prevention assembly tester approved by the City. The City will notify customers annually of required testing and the testing must be completed before a corrective action date passes. The customer will be subject to all applicable testing, maintenance and repair fees. On new installations, the City will: (1) provide on-site evaluation and/or inspection of plans in order to determine the type of backflow assembly, if any, that will be required; and (2) require certification of proper installation by an approved inspector prior to providing water service. For existing premises the City will perform evaluations and inspections of plans and/or premises and inform owners by letter of any corrective action deemed necessary, the method of achieving the

correction and the time allowed for the correction to be made. Ordinarily, corrections must be made within 60 days; however, the City may adjust this time period depending on the degree of hazard involved and the history of the assembly in question. Service may be discontinued immediately if necessary. The City will then inspect the premises on or after the expiration date of the required action to correct a cross-connection. If the premise is found to be in non-compliance with the City's request, the owner shall receive written notice that water service to the premises will be discontinued. If the owner informs the City of extenuating circumstances as to why the correction has not been completed within five working days of receipt of the notice of termination, the City may grant a time extension.

Inspection and testing of assemblies shall be done: (1) during the initial installation; (2) during on-site reviews of existing installations; (3) after any repairs or maintenance; (4) after any relocation; and (5) on an annual basis, but may be required more frequently for certain high hazard premises. When an initial installation or annual test indicates that a backflow assembly is not functioning properly, the owner shall correct the malfunction within five working days as directed by the City. After correcting the problem, the owner shall arrange for re-inspecting and testing of the assembly.

The owner shall be responsible for the payment of all fees: (1) for annual or semi-annual assembly inspection/testing; (2) for re-testing if the assembly fails to operate correctly; and (3) for any re-inspections for non-compliance with City requirements. The City inspects each cross-connection control device under City control annually, and will continue to maintain records of backflow assembly inspections. All cross-connection control devices under City control comply with the City's requirements.

Testing Quality Control Assurance Program

Development and implementation of a quality control assurance program for the testing of backflow prevention assemblies is required. Successful implementation of this program element assures that all backflow prevention assemblies are tested in a similar manner and kept in optimal condition.

The City shall ensure that all testing procedures are completed in a consistent manner. Only certified personnel shall be utilized to test all backflow assemblies. The City has a process for approving backflow assembly testers and only testers appearing on the City's approved list may be used for testing and repair. Personnel shall be trained as outlined by the State, fulfilling all necessary requirements in order to comply with WAC 246-290-490.

Testing shall be recorded on the proper forms and maintained at the administrative offices. Examples of testing forms can be found in the AWWA "Recommended Practice for Backflow Prevention and Cross-Connection Control" manual. In the future, the City will provide forms to their customers with the annual testing notification.

Testing personnel shall adhere to the following steps: (1) use only properly operating and calibrated gauge equipment; (2) follow proper field test procedures; (3) consult the manufacturer's repair and maintenance manual when disassembly is required; (4) use only original manufacturer spare parts; and (5) retest the backflow assembly immediately after repair or maintenance. Testers can only perform tests and repairs allowed by the Washington State Backflow Assembly Tester certification; all other repairs and installations require a Specialty Plumber's License. All persons performing tests, repairs or installations shall have all required certifications and licenses and shall furnish the City with copies upon request.

In addition to the above steps, testing procedures performed by certified test personnel shall be in compliance with current test procedures approved by the DOH, the AWWA yellow manual or the USCS manual, which may include the following: (1) advise customer of an impending test/inspection so that the customer's staff may participate; (2)

notify the fire department when shut down of a fire service is necessary; (3) flush residual dirt through test cocks before attaching test gauges; (4) ensure that the high and low pressure bypass hoses of the test kit are connected to the proper test cocks; open test cocks slowly when bleeding air through the bypass hoses; (5) test gauges shall be properly calibrated by a certified testing agency; and (6) assemblies should be tested before the warranty expiration date.

Incident Response

Purveyors are required to develop a backflow incident response plan. The following paragraph outlines the City's response to a backflow incident. Other emergency response procedures are included in the City of Kirkland Emergency Response Plan.

Emergency Condition: Water System Contamination and Pollution Due to a Backflow Incident

Impact on System: Potentially major impact. Water not suitable for potable use – loss of supply. Potential irreversible damage to water mains and pipes.

Emergency Response

1. Shut down the affected mains (if possible) to contain the affected contaminants.
2. Notify the Water Division Manager.
3. Notify the DOH of the backflow incident.
4. Notify all customers of the problem and instruct them to boil all water to be used for consumption and cooking or issue a no-drinking warning.
5. Flush affected water mains to remove contaminants.
6. Disinfect storage tanks and water mains, as necessary, to remove contaminated residuals.
7. Analyze water quality in other parts of the distribution system to ensure that all contaminants were contained.

This document (and the City of Kirkland Emergency Response Plan) outlines procedures to be followed if an emergency arises. When a CCC emergency is called into the City of Kirkland Police Department, or other emergency responder during non-business hours, the responder will notify the City's on-call person. This person assesses the emergency and will notify any City personnel as deemed necessary, depending on the severity of the emergency. All emergencies are reported to Mr. Greg Neumann, Water Division Manager. This person will be responsible for coordinating with City personnel, as well as other emergency responders, if necessary.

Public Education

Another CCC program requirement is that educational information of the CCC program be included in existing water system materials that are distributed to customers. Educational materials can be included in pamphlets, brochures, bill inserts, public service announcements and consumer confidence reports.

The City will develop CCC program education materials and will include them in bill inserts and City-wide newsletters.

Record Keeping

Purveyors must also develop and maintain records of their CCC program, as mandated by the DOH. At a minimum, purveyors must maintain the following records.

- Master list of service connections and/or premises where backflow prevention assemblies are protecting the public water system or fixtures.
- Assessed hazard level of each backflow assembly.
- Inventory information on approved air gaps, including location, degree of hazard, installation date, inspection history, inspection results and personnel conducting inspections.
- Backflow assembly inventory information, including location, assembly description, installation date, inspection history, test and repair history, test results and inspecting personnel.
- Atmospheric vacuum breaker (AVB) and spill resistant vacuum beaker (SRVB) inventory, including location, description, installation date, inspection history and inspecting personnel.
- Program summary and backflow incident reports.

The City will continue to keep records as required by the CCC program. At a minimum, the City will maintain the following information: (1) installation date of assemblies; (2) location of backflow assemblies; (3) inspection and testing reports of backflow assemblies; (4) performances of backflow assemblies; and (5) performance of licensed testers. All records will be on file at the administrative offices to allow access by City personnel.

Reclaimed Water Requirements

The final CCC program requirement is for systems that distribute or receive reclaimed water within their water service area. For these systems, additional CCC requirements may be imposed by the DOH in any permits issued in accordance with Chapter 90.46 RCW.

The City currently does not distribute or receive reclaimed water within its service area; therefore, these requirements are not applicable. However, if reclaimed water is used in the future the City will follow all requirements of the permits issued under Chapter 90.46 RCW.

PROGRAM IMPLEMENTATION AND RECOMMENDATIONS

The City's CCC program is an ongoing effort that requires staffing and resources to ensure its effectiveness in protecting the quality of drinking water in the distribution system. It is recommended that the first step the City takes is to update its CCC resolution. The language in the resolution should reflect the requirements of WAC 246-290-490 and adopt the CCC program outlined in this document. In addition, the City should continue to reference the American Water Works Association (AWWA) manual entitled, "Recommended Practice for Backflow Prevention and Cross-Connection Control" (AWWA M14) for the development of its updated CCC program resolution.

The City should also adopt a hazard evaluation program based on risk to the public drinking water supply. This evaluation should rank existing and potential cross-connections as high, medium and low risk. Based on the results of this evaluation, the City should then begin an elimination program

to eliminate the high-risk cross-connections first.

The City should also continue its inspection practices of the installed approved backflow assemblies. The City should continue documenting inspections in order to comply with the regulatory requirements.

The City currently meets the regulatory requirement of having at least one CCS (cross-connection specialist) to administer its CCC program. The City is encouraged to continue its active training program in order to comply with these requirements.

APPENDIX M

Water System Construction Standards

Water System

INDEX

WATER POLICIES

W-1 Additional Water Service Requirements, Accessory Dwelling Units (ADU)

W-2 Irrigation Specifications for City Maintained Systems

W-3 City-Installed Residential Water Services on Asbestos Concrete Water Lines

W-4 Department of Health Construction Completion Report Form

W-5 New Water System Documentation

WATER PRE-APPROVED NOTES, CONSTRUCTION CRITERIA, & PLANS

Water - Plan Notes 3
Water - Construction Criteria 5
Water Installation Procedures Checklist 7
Water and Sewer Spacing and Clearance W.01
Concrete Thrust Blocking W.02
Vertical Thrust Blocking W.03
Concrete Slope Anchor Detail W.04
Water Valve Extension W.05
Tapping Tees W.06
Casing Installation W.07
1" Air and Vacuum Release Valve Assembly W.08
2" Air and Vacuum Release Assembly W.09
Filling New Water Mains W.10
2" Blow-Off Assembly W.11
Typical Irrigation Configuration W.12
Hydrant Protection and Valve Marker Post W.13
Fire Hydrant Assembly W.14
Offset Hydrant Location W.15
Hydrant Location in Cut or Fill W.16
Water Meter Placement Details W.17
3/4" and 1" Water Meter Service Installation W.18
1-1/2" and 2" Water Meter Service Installation W.19
3″ & 4″ Water Meter Service Installation W.20
3/4" & 1″ Water Meter Box Placed in Planter W.21
1-1/2″ & 2″ Water Meter Box Placed in Planter W.22
¾″ and 1″ Water Meter Travel Box W.23
1-1/2" to 2" Water Meter Travel Box W.25

Double Check Valve Assembly W.26
Soft-seated Check Valve Assembly W.27
Reduced Pressure Principle Assembly W.28
Individual Pressure Reducing Valve Assembly (Residential) W.29
Individual Pressure Reducing Valve Assembly (Multi-Family or Commercial) W.30
Individual Pressure Reducing Valve Assembly with Pressure Relief
(Multifamily or Commercial) W.31
Fire Protection Sprinkler Assembly W.32
2" Manifold (4-6 Services).....W.33
Water Trench W.34
Water Valve Box W.35

WATER - PLAN NOTES

1. A pre-construction conference shall be held prior to the start of construction. The Contractor shall be responsible for securing all necessary permits prior to construction.

2. All water main work and material shall be in accordance with current AWWA, WSDOT, and APWA standard specifications, as amended by the City of Kirkland. All material utilized shall be new, no parts shall be reused. Any part removed from the system for any reason may not be reused and shall be replaced with a new part. (e.g. a Romac with a bad gasket must be replaced with an entirely new Romac assembly).

3. The water main shall be Class 52 ductile iron pipe conforming to ANSI/AWWA C151/A21.51-86 or the most recent revision. The pipe shall be 1/16" cement lined and sealed in accordance with ANSI/AWWA C104/A21.4-90. The cast iron or ductile iron pipe fittings shall be Class 250 as per ANSI/AWWA C110/A21.10-82. Pipe bedding shall be compacted to 95 percent of its maximum density at optimum moisture content. The main shall be installed with a minimum cover of 36" and a maximum cover of 60". Any deviations from this must be approved by the City of Kirkland prior to construction.

4. Concrete blocking for water mains shall be designed and installed in accordance with AWWA and City of Kirkland specifications and shall be installed at all vertical and horizontal bends and fittings. Prior to blocking, the fittings shall be wrapped with visqueen.

5. All connections to existing mains and all testing and disinfection shall be performed under the supervision of the City of Kirkland Department of Public Works Inspector.

6. Approximate locations of existing utilities have been obtained from available records and are shown for convenience. The Contractor shall be responsible for verification of the locations shown and for discovery of possible additional utilities not shown so as to avoid damage or disturbance. The underground utility location service shall be contacted for field location prior to any construction. The owner or his representative shall be contacted if a utility conflict exists. For utility location in King County, call 1-800-424-5555. The Contractor is responsible to ensure that utility locates are maintained throughout the life of the project.

7. All contractors working with AC pipe must be state-certified. The Contractor shall provide protective clothing and equipment (coveralls, gloves, boots, head covering, goggles, respirators, etc.) to crews working with asbestos cement pipe in order to assure the worker's exposure to asbestos material is at or below the limits prescribed in WAC 296-62-07705.

8. An approved copy of the water plan must be on site whenever construction is in progress.

9. A 5' minimum horizontal separation shall be maintained between all water facilities and underground power and telephone facilities, unless otherwise approved by the City of Kirkland.

10. For water main and sewer main separation requirements, see Item VIII.C of the Sanitary Sewer - Design Criteria Section and Detail W.01.

11. Pressure and purity testing shall be done in the presence of, and under the supervision of, a City of Kirkland Department of Public Works Inspector. The Contractor shall provide all plugs and temporary blowout assemblies for pressure testing and disinfection prior to final tie-in. No connection shall be made between the new main and the existing mains until the new piping has been disinfected, flushed, and passed both pressure and purity testing.
    Temporary plugs and blocking shall be installed at the points of connection to the existing system. For construction of new water main, the services, hydrants etc., will be tested with the main. Pressure testing will require a minimum of 200 psi for 15 minutes with no pressure drop. Upon satisfactory completion of the pressure test, the line shall be disinfected, flushed, and then a sample shall be taken for purity testing by the Public Works Inspector.

12. It shall be the Contractor's responsibility to notify the City of Kirkland Inspector 24 hours in advance of backfilling all water main construction. The Contractor shall be responsible for keeping as-built drawings of all construction not installed according to the approved plans. (This does not give approval for as-built construction.)

13. The Contractor shall contact the City of Kirkland Department of Public Works five (5) days prior to any work requiring the shutdown of existing water mains. The Contractor is required to give two (2) working days notice to all customers affected by a water main shutdown (notices and maps for the shutdown will be provided by the Water Division). Shutdowns shall be scheduled for Mondays, Tuesdays, Wednesdays, and Thursdays between 8 am and 2 pm. Shutdowns affecting institutions shall be scheduled at night. Only Water Division personnel or a designate of the Water Division Manager may operate valves, and/or hydrants, blow-offs, etc., for fills, shut downs, flushing, or recharging of water lines. Two (2) working days notice to the Water Division is required to schedule fills.

14. There shall be no water main construction on a Saturday, Sunday, or holidays observed by the City of Kirkland.

15. Should the water main work necessitate the closing of certain gate valves within the existing system, the City of Kirkland Maintenance Department shall be responsible for the operation of such valves.

16. The fire flow system shall be installed, tested, and approved prior to above-ground combustible construction.

17. All trench backfill shall be compacted to 95 percent density in roadways, roadway shoulders, roadway prism and driveways, and 85 percent density in unpaved areas. All pipe zone compaction shall be 95 percent.

18. Mega-lugs (or similar product) shall be required on all fittings and valves for tie-ins, or build-outs for tie-ins prior to a final connection to the existing water main. Appropriate concrete blocking is also required in addition to Mega-Lugs.

19. For the duration of any water main installation project, all existing and newly installed valve cans are to remain accessible to Water Division personnel.

20. When it becomes necessary to re-plumb the customer's side of an existing water meter as the result of the relocation of the existing service or to comply with other City of Kirkland Public Works specifications, the customer's side shall be reconnected with the appropriate plumbing materials (and related fittings) such as brass, copper, polyethylene with a 200 p.s.i. rating, or PVC. All parts, pipe, and/or fittings shall be new from the back side of the meter to the connection point of the customer's service.

21. No tie-in will be allowed into the existing tailpiece on the customer's side of the meter. If the existing meter does not have a check valve installed on the back side of the meter (customer's side) a check valve cannot be installed when doing the tie-in.

22. If a fitting, either during installation or after, is found to be defective in any way as determined by the City, the contractor shall replace the entire fitting and not just the defective component.

23. Beginning January 1, 2014, all pipes, pipe fittings, plumbing fittings, and plumbing fixtures used for potable water, must have a maximum lead content not to exceed 0.25%, per "Lead Free" standards as defined in Section 9 of NSF/ANSI Standard 61.

WATER- CONSTRUCTION CRITERIA

1. Unless otherwise specified, the minimum new water service size shall be 1" poly with a 1" angle stop. Crimping will not be allowed on any new or existing service.

2. The Water Department will install water meters after the services have been installed according to the following guidelines:

   A. When services are installed off a new main in a plat they are to be set at finished grade. The Public Works Construction Inspector may allow the services to be left above grade and capped if there are extenuating circumstances that prevent the services from being set at finished grade. After finished grade is set, the main may be shut off, the services lowered and the angle stops installed. In either case, the angle stops shall be set 6-10" below the top of the meter box at finished grade.

   B. When services are installed off an existing main, the angle stop is to be set at a grade between 6 and 10" below the top of the meter box. The meter box is to be set at finished grade. If it is determined that the service has been installed at the wrong elevation (grade), the contractor shall schedule a shut down with the Water Department before adjusting the service. If the Water Department determines the shut down area is too large, the contractor will need to excavate to the corporation stop and turn it off before adjusting the service.

3. When providing water service to a mixed use building such as retail use on the ground floor and office or residential use on the upper floors, each use in the building shall have its own separate water service and meter. As an example, a new building with ground-floor retail and upper-floor residential would have a minimum of two water services and meters; one for each of the separate uses. In addition, because deduct meters are not allowed for newly constructed multifamily and commercial buildings, it is suggested a separate irrigation service and meter be installed so monthly sewer charges are not charged against water being used for irrigation purposes (irrigation meters are not allowed on single-family residential lots).

4. A manifold system may be an option for new construction when a project needs 4 or more services. <u>Manifold systems are typically only allowed in Arterial streets when the water main is on the opposite side of the street from the property being served.</u> This option will be determined during the review process. For 4-6 services, a 2" manifold shall be used.

5. Size-on-size wet taps are allowed as long as the existing pipe is of an acceptable condition. If it is determined by City staff that the pipe cannot accept a wet tap, the new valve will need to be cut in.

6. New Main Installations: All new water mains shall be laid starting at the existing main. All valves shall be cut in or wet tapped first, (depending on the requirements for the new installation) allowing for a gap from the valve, (no less than 3' long and no more than 10' long) with temporary blocking per CK-W.10. The new main shall be laid starting at this point. After inspection of the new main and appurtenances (services, hydrants, air/vacs and blow-offs, etc.), the main shall be filled per CK-W.10, pressure tested, flushed and a "satisfactory" purity sample taken prior to tie-in. The contractor will be required to rent a 2" hydrant meter from the City per CK-W.10 for filling and flushing of the new main.

7. All fire lines are to be constructed completely from the valve to the mechanical room per both Public Works and Fire Department specifications. The valve may be wet tapped or cut in depending on the conditions of the installation. Shut downs for cut ins are to be coordinated with

the Water Division. Once the installation is complete, a "bag flush" is required. At that time, a "purity" sample will also be taken (operation of the valve at the main will be controlled by the Water Division). After a "satisfactory purity" sample is received, the line may then be pressure tested per approved specifications. After these steps are completed, the Water Division is to be notified to re-open the valve at the main. Minimum fire line size shall be 2" copper with ball valve at main (similar to a 2" water service). Fire lines 4" or larger shall be Class 52 DI with gate valve at main.

8. Hydrants installed with new main extensions shall be tested with the foot valve open and the main valve (hydrant) closed. Hydrant will then be inspected and operated during flush.

9. Hydrants installed on existing mains shall be swabbed with chlorine, flushed and pressure tested with the foot valve closed and the main valve (hydrant) open.

10. All new buildings shall have a water service that meets the current standards. Any existing services that need to be abandoned because of size, material, location or other conditions, must be cut and capped at the main per current Public Work's specifications. If it is determined that the existing corporation stop is a Hayes or B-machine, the corporation stop shall be removed from the main and a repair band installed (shall use ROMAC SS-1 (or equal) 12" long repair band if required).
    Note: Galvanized, "blue-poly", copper and PVC are the most common types of existing services that are found in the City and required to be upgraded.

11. Water services and meters shall not be located in driveways. If an existing water meter is located in an existing driveway and the service needs to be upgraded, or the driveway is removed and replaced, the existing water service shall be abandoned at the water main and a new water service shall be installed outside of the driveway.

12. If an existing water valve needs to be abandoned, a shut down shall be scheduled with the Water Department. The valve must be removed and a blind flange installed on the tee.

13. When an AC water main is tunneled under to install another utility, the section of the AC main within the trench and for 5 feet on either side of the trench shall be replaced with Class 52 DI pipe. It may require one full stick of pipe or more to include replacing any exposed couplings and mills. All connections shall be made with Romac couplings.

14. The contractor shall coordinate shut downs, fills and flushes with the City of Kirkland Inspector who will then coordinate dates and times with the Water Division. All valves, including hydrants, blow-offs, etc., shall be operated by City of Kirkland Water Department personnel. A minimum of two (2) working days notice to all affected property owners is required before a shut down can occur. A minimum of two (2) working days notice is required to schedule fills.
    Note: Scheduling of shut downs will not be allowed to occur for days immediately following holidays observed by the City of Kirkland.

15. In general, flushes are scheduled for the next working day after the new water system is filled. It is assumed that the pressure test will also be performed on the day of the fill. To adhere to this schedule, the Water Division must be notified by the City Inspector or Project Manager by 1PM on the day of the fill confirming that the pressure test was successful in order to receive the flush on the following working day.

Water Installation Procedures Checklist

General Notes:

- ☐ ONLY CITY WATER DEPARTMENT PERSONNEL ARE PERMITTED TO OPERATE VALVES ON LIVE IN-SERVICE MAINS INCLUDING HYDRANTS, BLOW-OFFS AND OTHER APPURTENCES OF THE EXISTING SYSTEM.
- ☐ All operating valves are to be accessible throughout the duration of the project.
- ☐ For multi-phased/scheduled projects, the City's construction inspector shall keep the water department personnel updated as to the timing and scope of the various phases.
- ☐ The City's construction inspector shall keep complete and accurate red-lined as-built construction information for transfer and creation of post-project construction record drawings.
- ☐ Field changes to the approved plans should be approved by the Project Engineer and Water Division.
- ☐ Water Division personnel will be available to the inspector if requested, to answer any installation questions.

CONSTRUCTION

Tying New Water Main to the Existing System:

- ☐ Connections to existing AC mains need to be made on rough barrel section of the main and not at milled joints using Romac brand couplers with the proper transition gaskets.
- ☐ New water main shall be filled, flushed and pressure tested with the City's construction inspector/ observer being present.
- ☐ Water shall not sit in a new main for more than 7-days after achieving purity prior to new system tie-in.
- ☐ Acceptable purity test results shall be obtained prior to scheduling any system tie-in.
- ☐ System tie-in's shall be scheduled for Monday thru Thursday only.
- ☐ A minimum of two working days notice to the water department is required for all system tie-in's.
- ☐ A maximum of one system tie-in will be scheduled per day unless multiple tie-ins are advantageous to the water system and have been approved by the Water Division.
- ☐ All service area turn-off notices must be distributed to affected parties two working days prior to any scheduled shut-off. (Water department personnel will provide door hanger notices and a shut-off area map – contractor shall be required to fill in the required information on the door hangers and for distribution of all door hanger notices.)
- ☐ Tie-ins using a bell and/or a wedding band are not allowed.

Water Main Bends:

- ☐ All fittings & valves at tie-ins or build outs for tie-ins shall have Mega-Lugs (or similar product) and concrete thrust blocks.
    - If concrete thrust blocks will not be fully cured at the time the new main is pressurized all the bends must have temporary "kickers" in place before the main will be re-charged.
    - All concrete blocks are to be hand mixed (with water) or delivered by ready mix truck before placed.

Old Water Main Valve Boxes:

- ☐ Shall be totally removed, the holes backfilled and the existing surface restored in-kind after the old water main is abandoned.

New Water Main Valves:

- ☐ Shall have resilient seats for all valves, no matter which type (gate or butterfly).
- ☐ Shall have the valve nut centered in the valve box with a nut depth no greater than 60" below grade.
- ☐ Shall have boxes that are free of debris.
- ☐ Shall be checked for proper operation before and after the new line is pressurized.
- ☐ Shall have the valve box lid painted blue enamel (Kelly Moore 5880 or equal).
- ☐ Shall have the valve box ears lined up in the direction of flow (parallel to the direction of the pipe.)

Fire Hydrants:

- ☐ Shall be replaced with new in all cases even if an existing hydrant is to be relocated.
- ☐ Shall utilize shackle rods and blocks -- no exceptions.
- ☐ Shall be set to proper grade.
- ☐ Shall be tested for proper function.
- ☐ Shall have two coats of safety yellow enamel paint.
- ☐ Shall have one Storz adapter installed – 5 ¼ Female Thread.
- ☐ Shall have a minimum 3' surrounding clearance for proper operation.

Water Meters and Boxes:

- ☐ Shall be replaced with new approved meter box per Standard Detail W.17, unless noted otherwise.
- ☐ Shall be set to grade – raised or lowered to the surrounding grade regardless of prior condition.
- ☐ Shall have the meter set at between 6" and 10" below meter box lid.
- ☐ Shall have new service tracer wire visible and wrapped around angle stop with the first 6" stripped.
- ☐ Shall have the customer side of meter re-plumbed with appropriate materials and related fittings (i.e., brass, copper, polyethylene or PVC (rated at 200 p.s.i.) where existing meter setters were used or if a service is being relocated. No tie-ins will be allowed to any existing meter-setter tailpieces on the customer's side of the meter.
- ☐ If the existing meter does not have a check valve installed on the customer side of the meter a check valve shall not be installed when doing the tie in.
- ☐ If existing meter appears damaged, the inspector shall note the address and notify the Project Engineer and or Water Department for replacement.

Air-Reliefs and Blow-offs:

- ☐ Shall be checked for proper function.
- ☐ Shall have all above ground piping painted with blue enamel and shall be identified with a blue enamel painted marker post.
- ☐ Air-Reliefs shall have 6 – 10" clearance from top of device to the finished grade of lid and the box grouted both inside and out.

PROJECT CLOSE-OUT

General Construction:

- ☐ The construction inspector shall perform a project walk-through with water department personnel prior to final curb and gutter, sidewalk and asphalt replacement.
- ☐ All items identified during the inspector/water department personnel walk-through will be incorporated into the original (first) punchlist given to the contractor.

CITY OF KIRKLAND
123 FIFTH AVENUE • KIRKLAND, WASHINGTON 98033-6189 • (425) 587-3800

DEPARTMENT OF PUBLIC WORKS
PRE-APPROVED PLANS POLICY

Policy W-1: ADDITIONAL WATER SERVICE REQUIREMENTS ACCESSORY DWELLING UNITS (ADU)

ADUs are subject to the same general utility requirements as single family residential permits, and when ADUs create additional demand on water services for residences, upgrades to larger services are required under the following conditions:

1. Water meter and service shall be sized per the Uniform Plumbing Code.

2. Only one water meter will be allowed for an attached ADU.

3. Water services for detached ADUs will be handled as follows:
    - The owner may choose one primary larger meter, or two separate smaller meters to serve the buildings.
    - For new single family residences, if the primary larger service is chosen, a Water Capital Facility Charge (WCFC) and a Regional Capital Facility Charge (RCFC) will be assessed against the primary residence Building Permit.
    - If the detached ADU is constructed on property with an existing primary residence, and the owner wants to serve both buildings with one primary larger meter, the WFC and RCFC water service assessments will be based upon the difference between the existing water meter size and the new water size.
    - If the owner chooses two separate smaller services, an additional Water Capital Facility Charge (WCFC) and a Regional Capital Facility Charge (RCFC) will be assessed against any new water meters. Both the existing/new house and the ADU will have separate water meters.

4. When new meters are installed, a water meter installation fee will be charged.
5. Fees for new water meters, WCFC, and RCFC will be based on the City's most current fee schedule. Because these fees do change annually, the applicant/owner should check the fee schedule before applying for a permit.

6. All special water connection fees associated with Local Improvement Districts or Latecomers Agreements shall be paid accordingly.

7. All ADUs with separate water services will be subject to separate monthly sewer, water, and garbage disposal fees (this is currently about $150 for a two month billing period).

CITY OF KIRKLAND
123 FIFTH AVENUE • KIRKLAND, WASHINGTON 98033-6189 • (425) 587-3800

DEPARTMENT OF PUBLIC WORKS
PRE-APPROVED PLANS POLICY

Policy W-2: IRRIGATION SPECIFICATIONS FOR CITY MAINTAINED SYSTEMS

When an irrigation system is to be installed in the public right of way, whether in conjunction with a Capital Improvement Project or by Private Development, and that system is to be maintained by the City of Kirkland, the following specifications will need to be incorporated into the design of the system:

- *Pipe, Tubing and fitting* – All pipe and tubing shall be ¾" to 1" schedule 40 PVC or approved equal (all piping in median islands to be 1"). All fittings shall be schedule 80 PVC. All sleeving shall be 2" schedule 40 PVC. 1" water service lines shall use ¾" meter unless otherwise approved.
- *Polyvinyl Chloride Pipe and Fittings* – Pipe shall be schedule 40 PVC pipe for the main, laterals and sleeves.
- *Automatic Controller* – Battery operated controller shall be Nelson Model 8030 with adapter for Weathermatic. If using a fixed controller with a designated power source supply, a Weathermatic Smartline controller shall be used. When possible, a Slw 10 weather station should also be installed. Controller shall be operable and fully functioning prior to final inspection.
- *Sprinkler Heads* – Pop-up spray heads, impact heads and bubblers shall be Hunter or approved equal. If installed along curbing, heads shall be flush and adjacent to top of curb. Nozzles shall be MP rotators.
- *Valve Boxes and Protective Sleeves* – Valve boxes for control valves shall be Carson 1419 Box, with locking lid or approved equal. Valve boxes for double check valve assembly shall be Carson 1324 with locking lid, or approved equal.
- *Automatic Control Valves* – Automatic control valves shall be Weathermatic 2100 series.
- *Quick Coupling Equipment* – Quick coupling equipment shall be Rainbird #44DLRC or approved equal.
- *Irrigation Service* – The Contractor shall install the appropriate size water service to meet the design of the system. The service shall be installed per specifications outlined in the current edition of the Public Works Department Pre-Approved Plans Manual. The Contractor shall coordinate with the City of Kirkland Public Works Department for the installation of the water meter (fees may apply).
- *Coverage* – There shall be full, uniform, and complete coverage of irrigation area and coverage test shall be performed under automatic operation.
- Appropriate backflow devices and or Pressure Reducing valves will be installed according to the latest version of the *Uniform Plumbing Code* as adopted by the City of Kirkland Building Department.

CITY OF KIRKLAND
123 FIFTH AVENUE | KIRKLAND, WASHINGTON 98033-6189 | (425) 587-3800

DEPARTMENT OF PUBLIC WORKS
PRE-APPROVED PLANS POLICY

Policy W-3: CITY-INSTALLED RESIDENTIAL WATER SERVICES ON ASBESTOS CONCRETE WATER LINES

When an existing single-family residential water service is being abandoned and a new water service is being installed on an asbestos concrete (AC) water main, the City of Kirkland Water Department may provide the abandonment and installation work. The full cost to abandon the existing service and install the new service shall be paid by the customer; please check with the Public Works Department for the most current fee schedule.

In order to perform this work, the following conditions must be met:

1. The water main must be asbestos concrete (AC)

2. The retirement and tap to the main will be granted only to new single-family in-fill lots and single-family remodeling permits where abandonment of an existing substandard water service is required. The service may be substandard in size, material, or location.

3. The applicant may obtain a final inspection without having the Water Department asphalt patch completed. Also, Street Overlay Policy R.7 is still applicable, even if the Water Department patch trips the required overlay. In some cases, a performance security may be required if the overlay cannot be completed prior to final inspection.

4. The Water Department requires the appropriate advanced notice and site preparation prior to performing the abandonment and tap on the AC main. All appropriate utilities must be located; the utility locations will be honored for a maximum of 10 days, notwithstanding any markings disturbed due to construction activity. The water meter location must be staked for grade by providing a 5-foot offset for meter elevation/location and the finished grade so the angle stop can be set at the appropriate elevation.

5. The Public Works Department will charge the installation fee to the Building Permit. All other fees associated with upgraded water services will be applicable.

6. The contractor must schedule and coordinate the water service installation through a Public Works Inspector.

CITY OF KIRKLAND
123 FIFTH AVENUE | KIRKLAND, WASHINGTON 98033-6189 | (425) 587-3800

DEPARTMENT OF PUBLIC WORKS
PRE-APPROVED PLANS POLICY

Policy W-4: DEPARTMENT OF HEALTH CONSTRUCTION COMPLETION REPORT FORM

Attached is a copy of the Department of Health's **Construction Completion Report Form for Distribution Main Projects**.

This form is to be filed by the City with new water main extensions.

An electronic copy of this form is located at:

H:\Pw\Water Comp Plan Update\Water Comprehensive Plan 2007 Update\DOH Construction Completion Report Form.doc

CONSTRUCTION COMPLETION REPORT FORM
FOR DISTRIBUTION MAIN PROJECTS

In accordance with WAC 246-290-120(5), a ***Construction Completion Report*** is required for all construction projects. Under the submittal exception process for distribution main projects, designed by a professional engineer but not submitted to DOH for approval, the report does not need to be submitted. **However, the purveyor must keep the Construction Completion Report on file and make it available for review upon request by DOH in accordance with WAC 246-290-125 (2)(b).** Furthermore:

(1) The report form **must** bear the seal, date and signature of a professional engineer (PE) licensed in the state of Washington; and

(2) Per WAC 246-290-120(5)(c), the amount of change in the physical capacity of a system must be documented, if the project results in a change in physical capacity.

Name of Water System

Name of Purveyor (Owner or System Contact)

Mailing Address

City State Zip

DOH System ID No.: _____

Date Water System Plan that includes Standard Construction Specifications

Date Standard Specifications Approved by DOH: _____

PROJECT NAME AND DESCRIPTIVE TITLE:

(Include the name of any development project and number of services.)

Date Project or Portions Thereof Completed

PROFESSIONAL ENGINEER'S ACKNOWLEDGMENT

The undersigned professional engineer (PE), or his/her authorized agent, has inspected the above-described project that, as to layout, size and type of pipe, valves and materials, and other designed physical facilities, has been constructed and is substantially completed in accordance with construction documents reviewed by the purveyor's engineer. In the opinion of the undersigned engineer, the installation, physical testing procedures, water quality tests, and disinfection practices were carried out in accordance with state regulations and principles of standard engineering practice.

I have reviewed the disinfection procedures, pressure test results, and results of the bacteriological test(s) for this project and certify that they comply with the requirements of the construction standards/specifications approved by DOH.

P.E.'s Seal

Date Signed

Name of Engineering Firm

Name of PE Acknowledging Construction

Mailing Address

City State Zip

Engineer's Signature

State/Federal Funding Type (if any) _____

Please keep a completed, signed, and stamped copy on file.

☐ **NWRO Drinking Water** **Department of Health** **20435 72nd Ave. S, Ste 200** **Kent, WA 98032-2358** **(253) 395-6750**	☐ **SWRO Drinking Water** **Department of Health** **PO Box 47823** **Olympia, WA 98504-7823** **(360) 236-3030**	☐ **ERO Drinking Water** **Department of Health** **1500 W. Fourth Ave, Suite 305** **Spokane, WA 99201** **(509) 456-3115**

For persons with disabilities, this document is available on request in other formats. To submit a request, please call 1-800-525-0127 (TTY 1-800-833-6388).

CITY OF KIRKLAND

123 FIFTH AVENUE ● KIRKLAND, WASHINGTON 98033-6189 ● (425) 587-3800

PRE-APPROVED PLANS POLICY

Policy W-5: NEW WATER SYSTEM DOCUMENTATION

Developers or Contractors shall submit a preliminary blueline copy of the water construction Record Drawings showing any changes to the design made during construction. These drawing must be provided immediately after the new water system is tied in to the existing water system.

1. Drawings to show all changes to the system design (valves, lengths, size, tie-in method, additions, deletions, etc.).

2. Preliminary drawings do not have to bear the stamp of a licensed professional surveyor or engineer.

LAST REVISED: 11/30/99

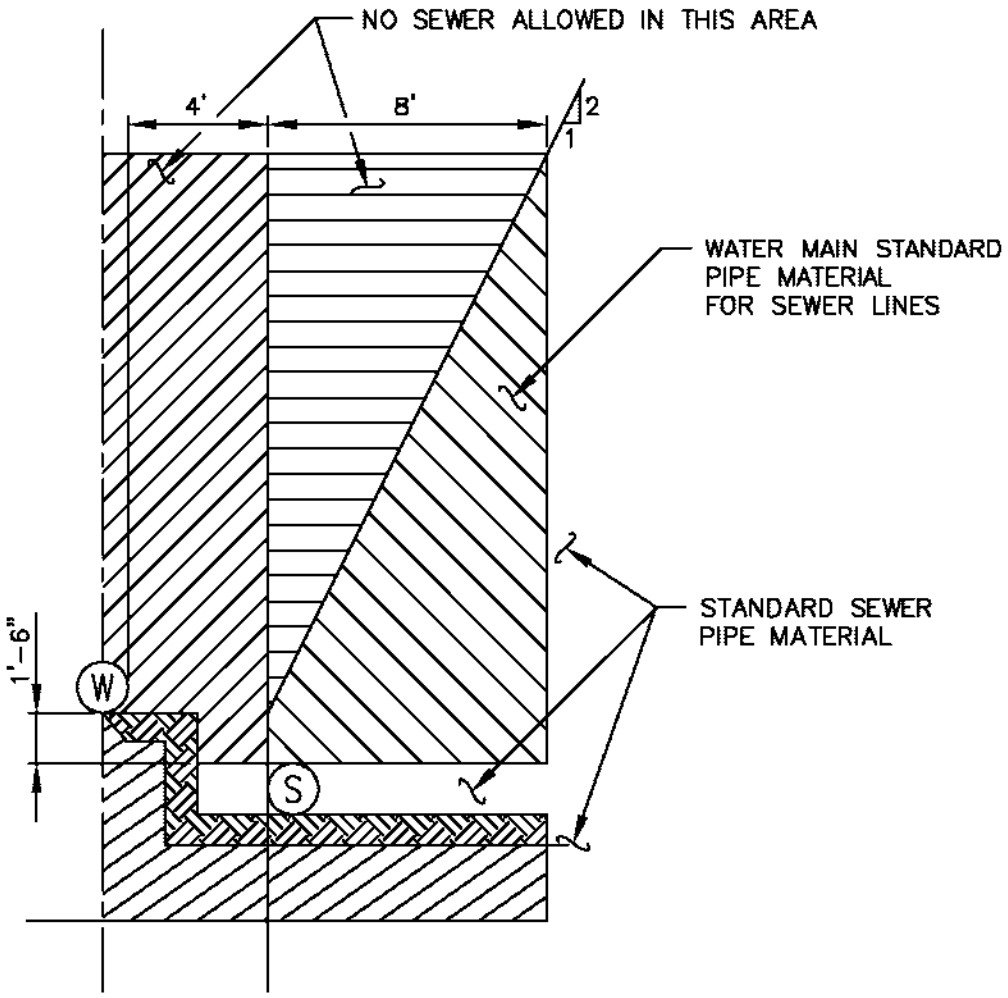

PARALLEL CONSTRUCTION

TABLE 1

WATER MAIN STANDARD PIPE MATERIAL

AWWA STANDARD			
TYPE OF PIPE	PIPE	JOINT	FITTINGS
DUCTILE IRON	C 1.52	C 111	C 110
CONCRETE CYLINDER	C 303		

NOTES

1. TO BE USED WHEN 10' MINIMUM SEPARATION CANNOT BE OBTAINED.

CITY OF KIRKLAND

PLAN NO. CK-W.01

CITY OF KIRKLAND WASHINGTON

WATER AND SEWER SPACING AND CLEARANCE

LAST REVISED: 11/30/99

THRUST BLOCK – TABLE

PIPE SIZE	PRESSURE PSI	MINIMUM BEARING AREA AGAINST UNDISTURBED SOIL SQUARE FEET A	B	C	D	E	X (100 PSI)
4"	200 300	2/(1) 3/(2)	1/(NONE) 2/(2)	1/(NONE) 2/(1)	NONE 1/(1)	NONE NONE	NONE
6"	200 300	4/(3) 6/(4)	3/(2) 4/(3)	3/(1) 3/(2)	1/(1) 2/(1)	1/(NONE) 1/(NONE)	NONE
8"	200 300	7/(5) 11/(8)	5/(3) 8/(5)	4/(3) 6/(4)	2/(2) 3/(2)	1/(1) 2/(1)	3/(2)
10"	200 275	11/(8) 16/(11)	8/(6) 11/(7)	6/(4) 9/(6)	3/(2) 5/(3)	2/(1) 3/(2)	4/(3)
12"	200 250	16/(11) 24/(16)	11/(8) 17/(11)	9/(6) 13/(9)	5/(3) 7/(5)	3/(2) 4/(3)	5/(4)
14"	200 250	22/(13) 33/(22)	16/(11) 23/(16)	12/(8) 18/(12)	6/(4) 9/(6)	3/(2) 5/(3)	7/(6)
16"	200 225	29/(19) 23/(16)	21/(14) 23/(16)	16/(11) 17/(12)	8/(6) 9/(6)	5/(3) 5/(3)	10/(7)
18"	200	36/(24)	26/(17)	20/(13)	10/(7)	5/(4)	13/(9)
20"	200	45/(29)	32/(21)	24/(16)	13/(8)	7/(4)	16/(11)
24"	200	64/(43)	46/(30)	35/(23)	18/(12)	9/(6)	23/(16)

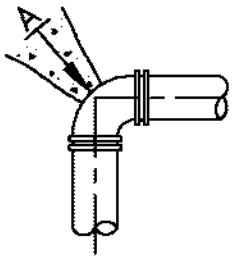

90° BEND

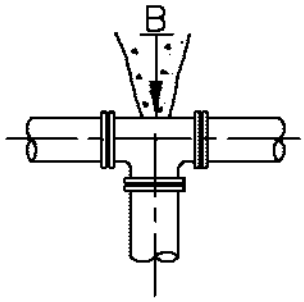

TEE

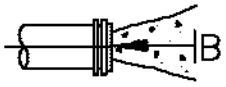

CAP

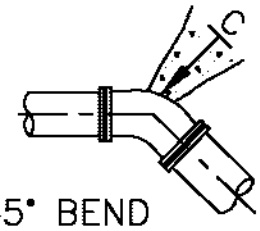

45° BEND

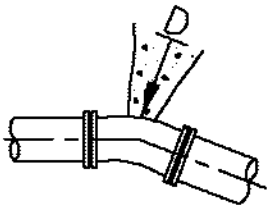

22 1/2° BEND

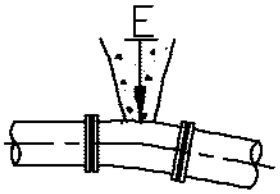

11 1/4° BEND

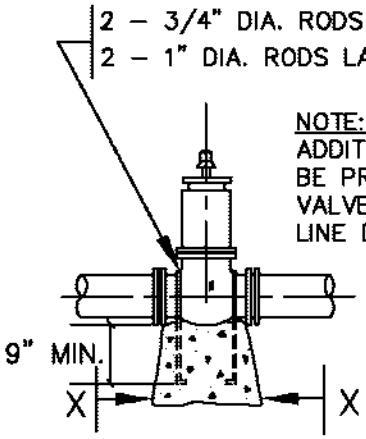

NOTE:
ADDITIONAL BLOCKING MUST BE PROVIDED IF GATE VALVE IS AT END OF LINE LINE DURING TESTING.

GATE VALVE

NOTES:

1. SQUARE FEET OF CONCRETE THRUSTS – BLOCK AREA BASED ON SAFE BEARING LOAD OF 2000/(3000) POUNDS PER SQUARE FOOT.
2. AREAS MUST BE ADJUSTED FOR OTHER SIZE PIPE, PRESSURES & SOIL CONDITIONS.
3. CONCRETE BLOCKING SHALL BE CAST IN PLACE & HAVE MINIMUM OF 1/4 SQUARE FOOT BEARING AGAINST THE FITTING.
4. BLOCK SHALL BEAR AGAINST FITTINGS ONLY & SHALL BE CLEAR OF JOINTS TO PERMIT TAKING UP OR DISMANTLING JOINT.
5. CONTRACTOR SHALL INSTALL BLOCKING ADEQUATE TO WITHSTAND FULL TEST PRESSURE AS WELL AS TO CONTINUOUSLY WITHSTAND OPERATING PRESSURE UNDER ALL CONDITIONS OF SERVICE.

SAFE BEARING LOADS IN LB./SQ. FT.
THE SAFE BEARING LOADS GIVEN IN THE FOLLOWING TABLE ARE FOR HORIZONTAL THRUSTS WHEN THE DEPTH OF COVER OVER THE PIPE EXCEEDS 2 FEET.

SOIL	SAFE BEARING LOAD LB. PER SQ. FT.
* MUCK, PEAT, ETC.	0
SOFT CLAY	1,000
SAND	2,000
SAND & GRAVEL	3,000
SAND & GRAVEL CEMENTED WITH CLAY	4,000
HARD SHALE	10,000

* IN MUCK OR PEAT, ALL THRUSTS SHALL BE RESTRAINED BY PILES OR TIE RODS TO SOLID FOUNDATIONS OR BY REMOVAL OF MUCK OR PEAT AND REPLACEMENT WITH BALLAST OF SUFFICIENT STABILITY TO RESIST THRUST.

CITY OF KIRKLAND

PLAN NO. CK–W.02

CITY OF KIRKLAND WASHINGTON

CONCRETE THRUST BLOCKING

LAST REVISED:02/04/10

VERTICAL BLOCKING FOR 11 1/4°–22 1/2°–30° BENDS					
PIPE SIZE	V B	CU FT	A	D	L
4"	11 1/4°	8	2.0'	5/8"	1.5'
	22 1/2°	11	2.2'		2.0'
	30°	17	2.6'		
6"	11 1/4°	11	2.2'	5/8"	2.0'
	22 1/2°	25	2.9'		
	30°	41	3.5'		
8"	11 1/4°	16	2.5'	5/8"	2.0'
	22 1/2°	47	3.6'		
	30°	70	4.1'	3/4"	2.5'
12"	11 1/4°	32	3.2'	3/4"	2.0'
	22 1/2°	88	4.5'	7/8"	3.0'
	30°	132	5.1'		
16"	11 1/4°	70	4.1'	7/8"	3.0'
	22 1/2°	184	5.7'	1 1/8"	4.0'
	30°	275	6.5'	1 1/4"	
20"	11 1/4°	91	4.5'	7/8"	3.0'
	22 1/2°	225	6.1'	1 1/4"	4.0'
	30°	330	6.9'	1 3/8"	4.5'
24"	11 1/4°	128	5.0'	1"	3.5'
	22 1/2°	320	6.8'	1 3/8"	4.5'
	30°	480	7.9'	1 5/8"	5.5'
VERTICAL BLOCKING FOR 45° BENDS					
4"	45°	30	3.1'	5/8"	2.0'
6"		68	4.1'		
8"		123	5.0'		
12"		232	6.1'	3/4"	2.5'
16"		478	7.8'	1 1/8"	4.0'
20"		560	8.2'	1 1/4"	
24"		820	9.4'	1 3/8"	4.5'

NOTES:

1. CONCRETE BLOCKING BASED ON 200 PSI PRESSURE AND 3000 PSI CONCRETE.

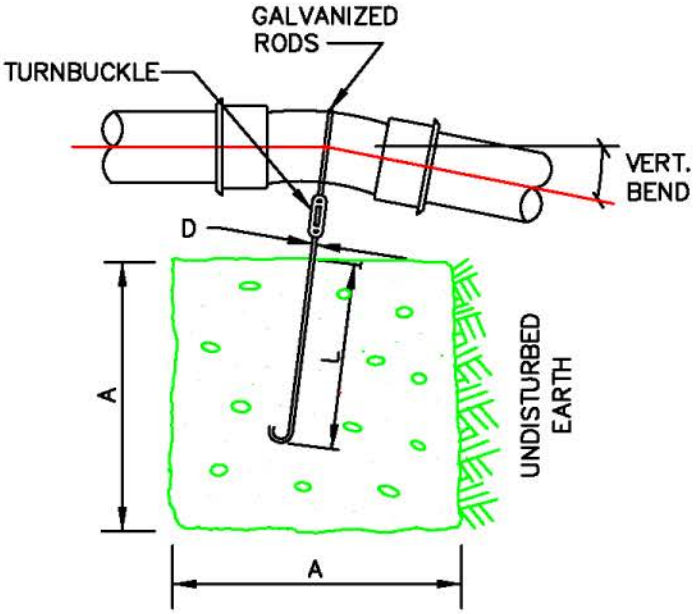

VERTICAL BLOCKING
FOR 11 1/4°, 22 1/2°, & 30° BENDS

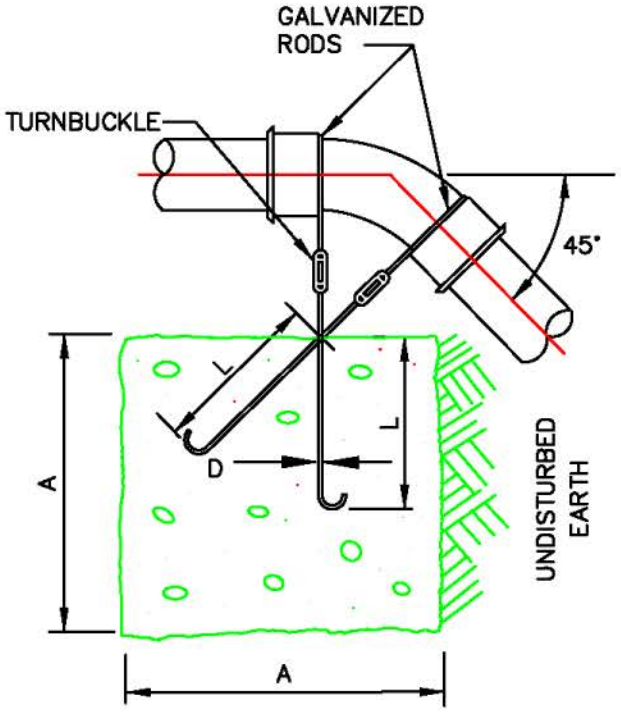

VERTICAL BLOCKING
FOR 45° BENDS

CITY OF KIRKLAND

PLAN NO. CK–W.03

CITY OF KIRKLAND WASHINGTON

VERTICAL THRUST BLOCKING

LAST REVISED:02/04/10

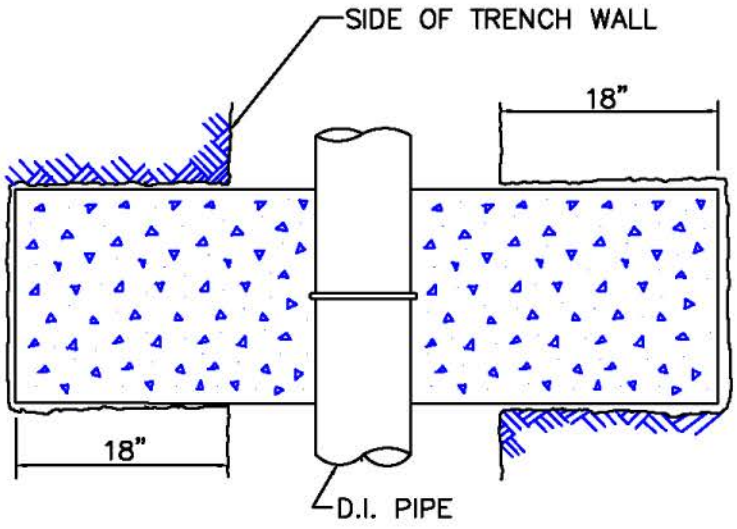

PIPE SIZE	DIMENSIONS (INCHES)				
	A	B	C	D	E
4"	2.4	4.8	17	13	14.6
6"	3.5	6.9	18	14	14.5
8"	4.5	9.1	19	15	14.5
10"	5.6	11.1	20	16	14.4
12"	6.6	13.2	21	17	14.4
14"	7.7	15.3	22	18	14.3
16"	8.7	17.4	23	19	14.3
18"	9.8	19.5	24	20	14.2

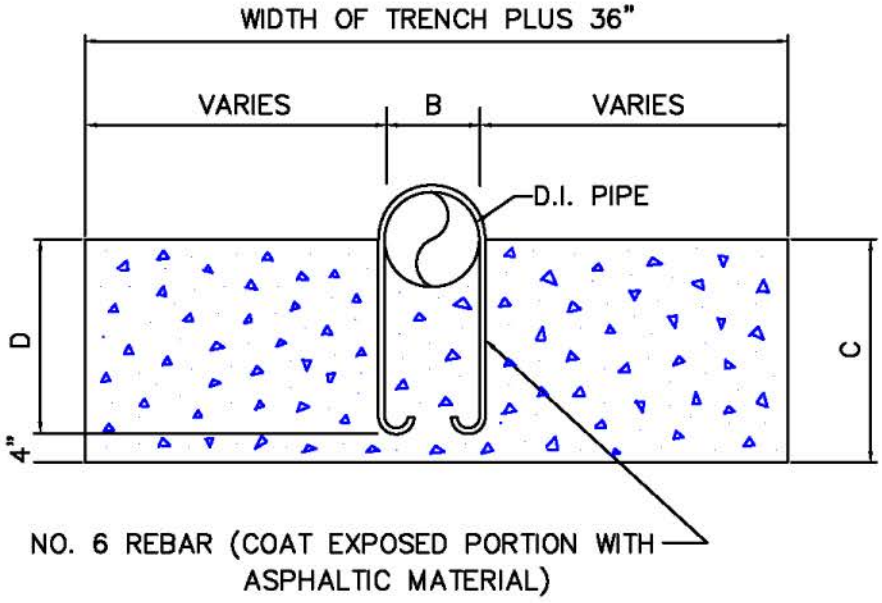

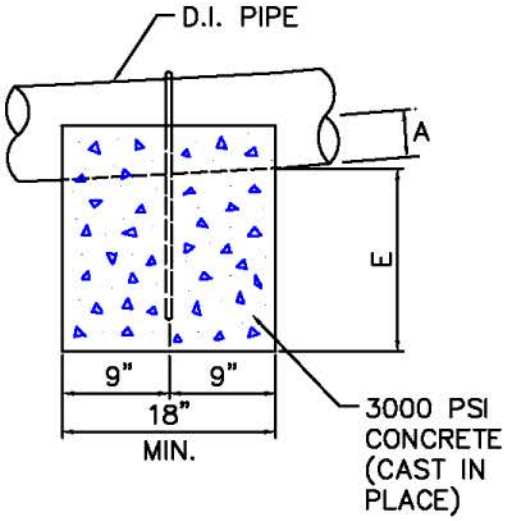

SLOPES > 20% – PROVIDE CONCRETE SLOPE ANCHORS (20' TO 25' ON CNTR.)

CITY OF KIRKLAND

PLAN NO. CK–W.04

CITY OF KIRKLAND WASHINGTON

CONCRETE SLOPE ANCHOR DETAIL

LAST REVISED: 1/10/2011

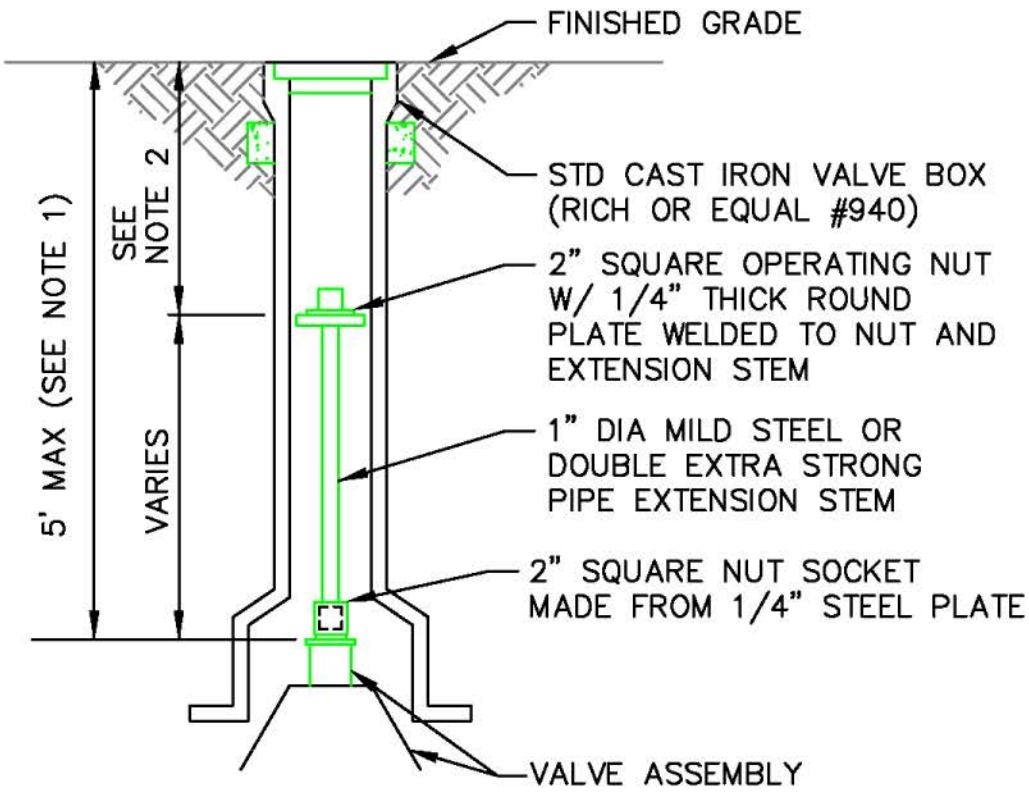

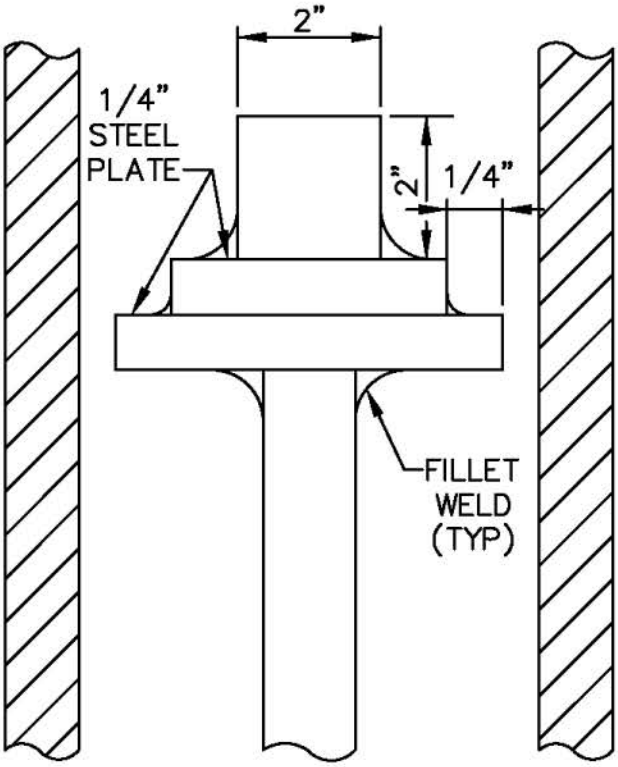

EXTENSION DETAIL

NOTE:

1. VALVE EXTENSIONS ARE ONLY REQUIRED IF DEPTH FROM FINISHED GRADE TO TOP OF OPERATING NUT IS GREATER THAN 5 FEET.

2. WHEN AN EXTENSION IS USED, THE DEPTH FROM EXTENSION OPERATING NUT TO FINISHED GRADE SHALL NOT BE LESS THAN 3 FEET.

CITY OF KIRKLAND	
PLAN NO. CK-W.05	
CITY OF KIRKLAND WASHINGTON	WATER VALVE EXTENSION

LAST REVISED: 09/09/03

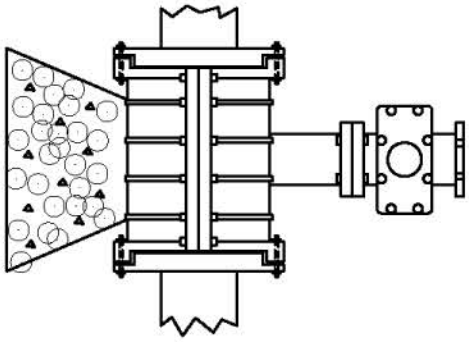

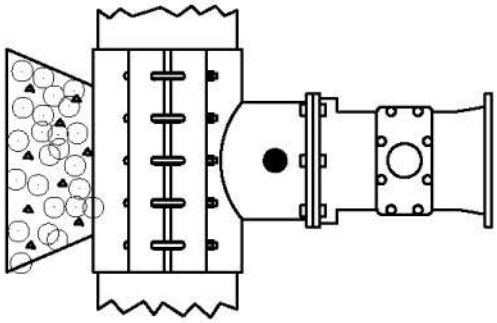

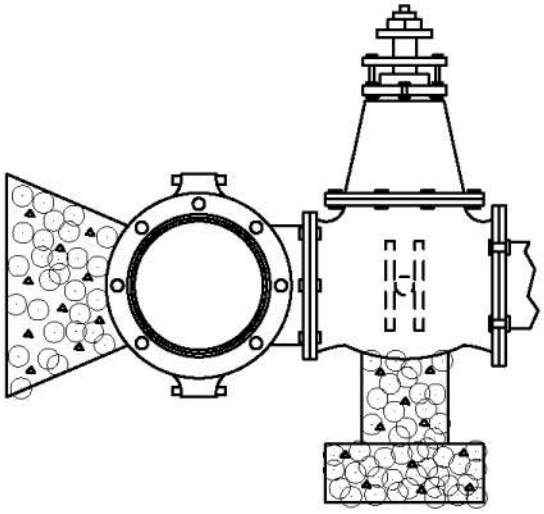

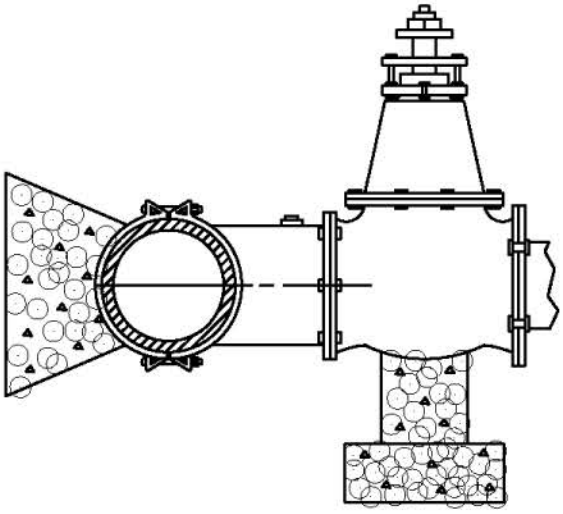

CAST IRON TAPPING TEE MECHANICAL JOINT SLEEVE

INSTALLED ON ASBESTOS CEMENT PIPE, CAST IRON PIPE AND DUCTILE IRON PIPE.

STAINLESS STEEL OR STEEL TAPPING TEE

STAINLESS STEEL TAPPING TEE

INSTALLED ON ASBESTOS CEMENT PIPE, CAST IRON PIPE AND DUCTILE IRON PIPE.

STEEL TAPPING TEE

INSTALLED ON DUCTILE IRON PIPE ONLY.

NOTES:

1. STAINLESS STEEL TAPPING TEES SHALL HAVE FULL CIRCLE SEAL. BOLTS AND NUTS SHALL BE STAINLESS STEEL.
2. STEEL TAPPING TEES SHALL BE EPOXY COATED. BOLTS AND NUTS SHALL BE COR-TEN, OR STAINLESS STEEL.
3. ALL TEES AND VALVES TO BE WATER TESTED BEFORE TAP.

CITY OF KIRKLAND

PLAN NO. CK-W.06

CITY OF KIRKLAND WASHINGTON

TAPPING TEES

LAST REVISED: 11/30/99

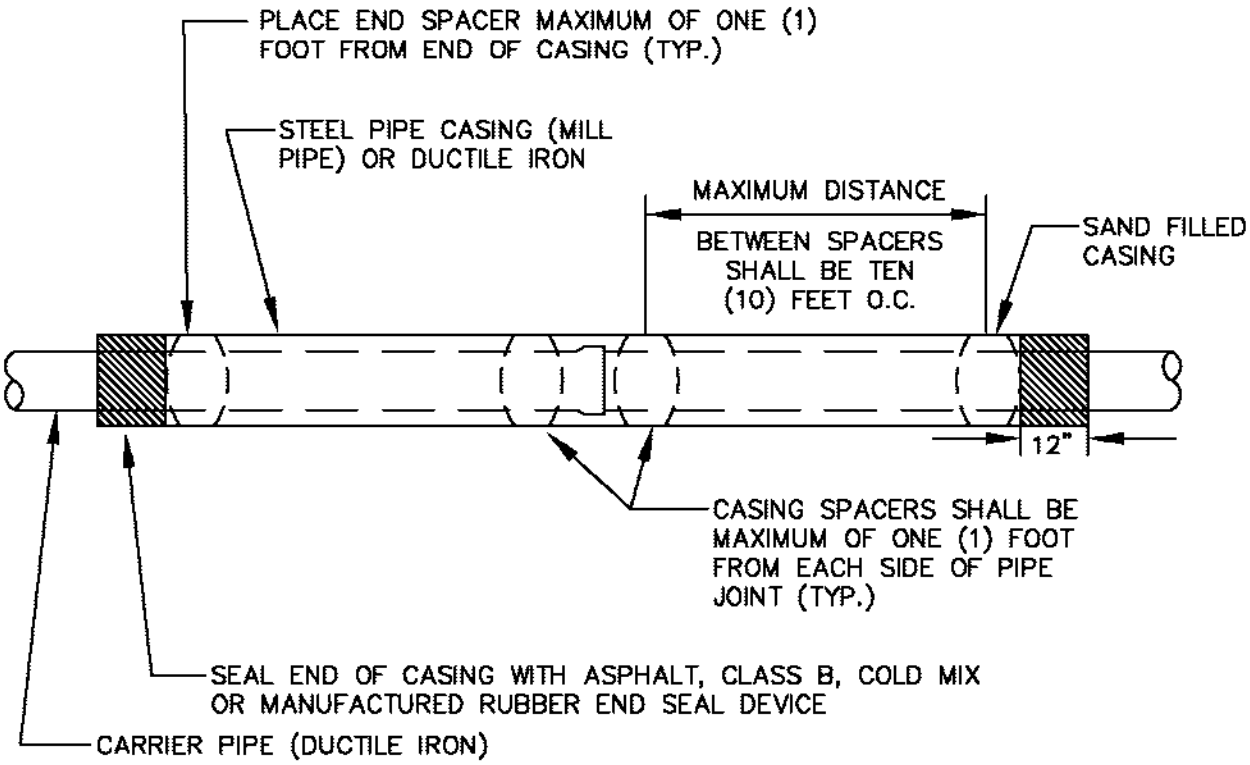

CASING SPACERS (SEE APPROVED MATERIALS LIST)

CARRIER PIPE DIAMETER	4"	6"	8"	10"	12"
CASING DIAMETER (PUSH-ON JOINT CARRIER PIPE)	10"	12"	14"	16"	20"
CASING DIAMETER (MJ/MEGALUG JOINT CARRIER PIPE)	14"	16"	18"	20"	22"*
STEEL CASING THICKNESS	0.25"	0.25"	0.25"	0.25"	0.25"
SPACER BAND WIDTH	8"	8"	12"	12"	12"

* 24" FOR DUCTILE IRON CASING.

ANTICORROSIVE COATING THICKNESS:
CARRIER – 8 MILLS DFT
CASING – 8 MILLS DFT

NOTES:

1. CASING SPACERS SHALL BE "CENTER POSITIONING" TYPE.
2. MINIMUM RUNNER WIDTH SHALL BE 2 INCHES.
3. RUNNER HEIGHT SHALL BE SIZED TO PROVIDE:
   A. MINIMUM 0.75" BETWEEN CARRIER PIPE BELL AND CASING PIPE WALL AT ALL TIMES.
   B. MINIMUM 1" CLEARANCE BETWEEN RUNNERS AND TOP OF CASING WALL TO PREVENT JAMMING DURING INSTALLATION.
4. STEEL CASING DIAMETERS ARE "OUTSIDE DIAMETER" FOR 16" AND LARGER.

CITY OF KIRKLAND

PLAN NO. CK-W.07

CITY OF KIRKLAND WASHINGTON

CASING INSTALLATION

LAST REVISED:3/01/13

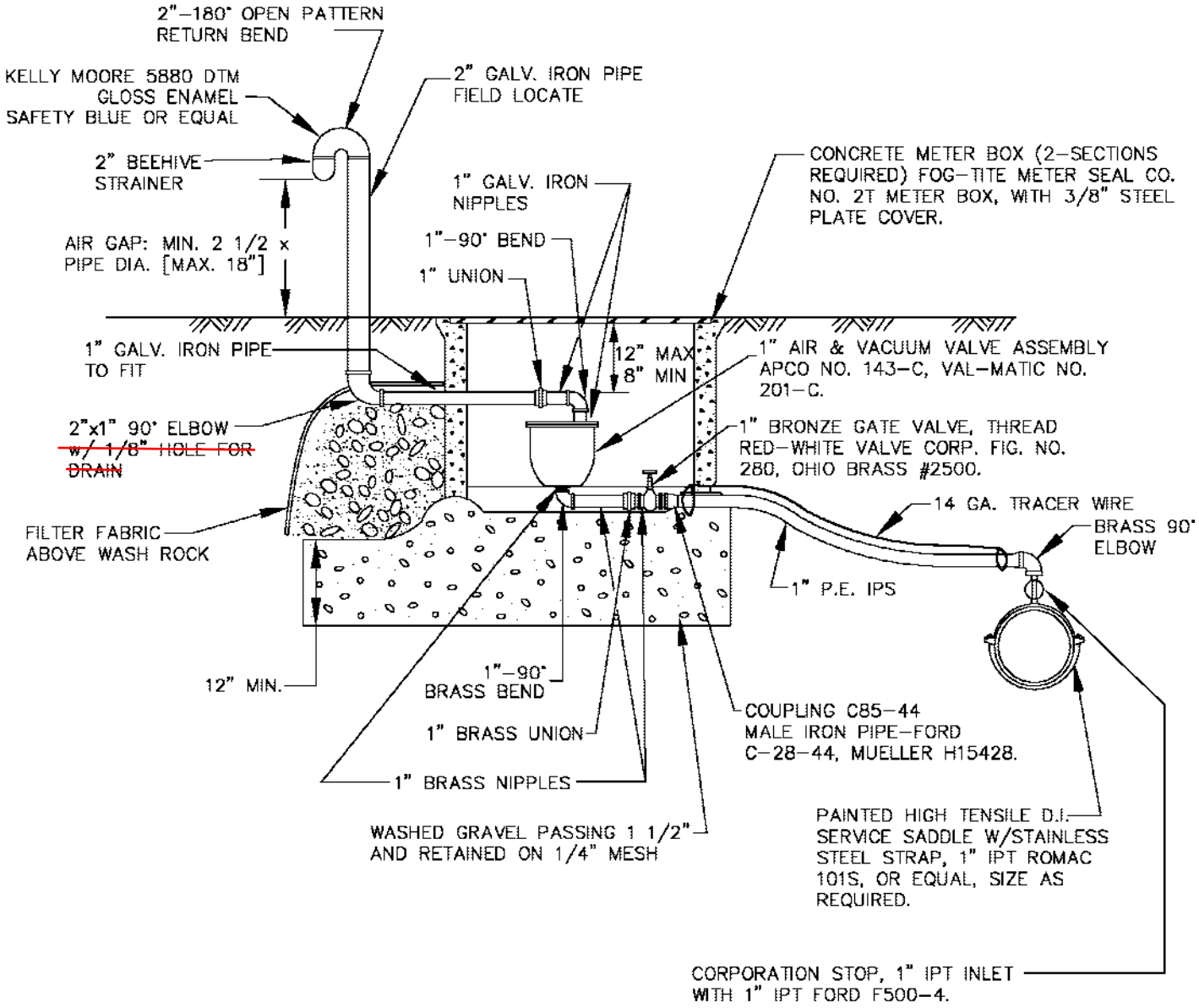

NOTES:

1. ALL FITTINGS TO BE BRASS OR COPPER FROM WATER MAIN TO 1" AIR & VACUUM ASSEMBLY.
2. AIR & VACUUM RELEASE VALVE ASSEMBLY MUST BE INSTALLED AT HIGHEST POINT OF LINE. IF HIGH POINT FALLS IN A LOCATION WHERE ASSEMBLY CANNOT BE INSTALLED, PROVIDE ADDITIONAL DEPTH OF LINE TO CREATE HIGH POINT AT A LOCATION WHERE ASSEMBLY CAN BE INSTALLED.

CITY OF KIRKLAND	
PLAN NO. CK–W.08	
CITY OF KIRKLAND WASHINGTON	1" AIR AND VACUUM RELEASE VALVE ASSEMBLY

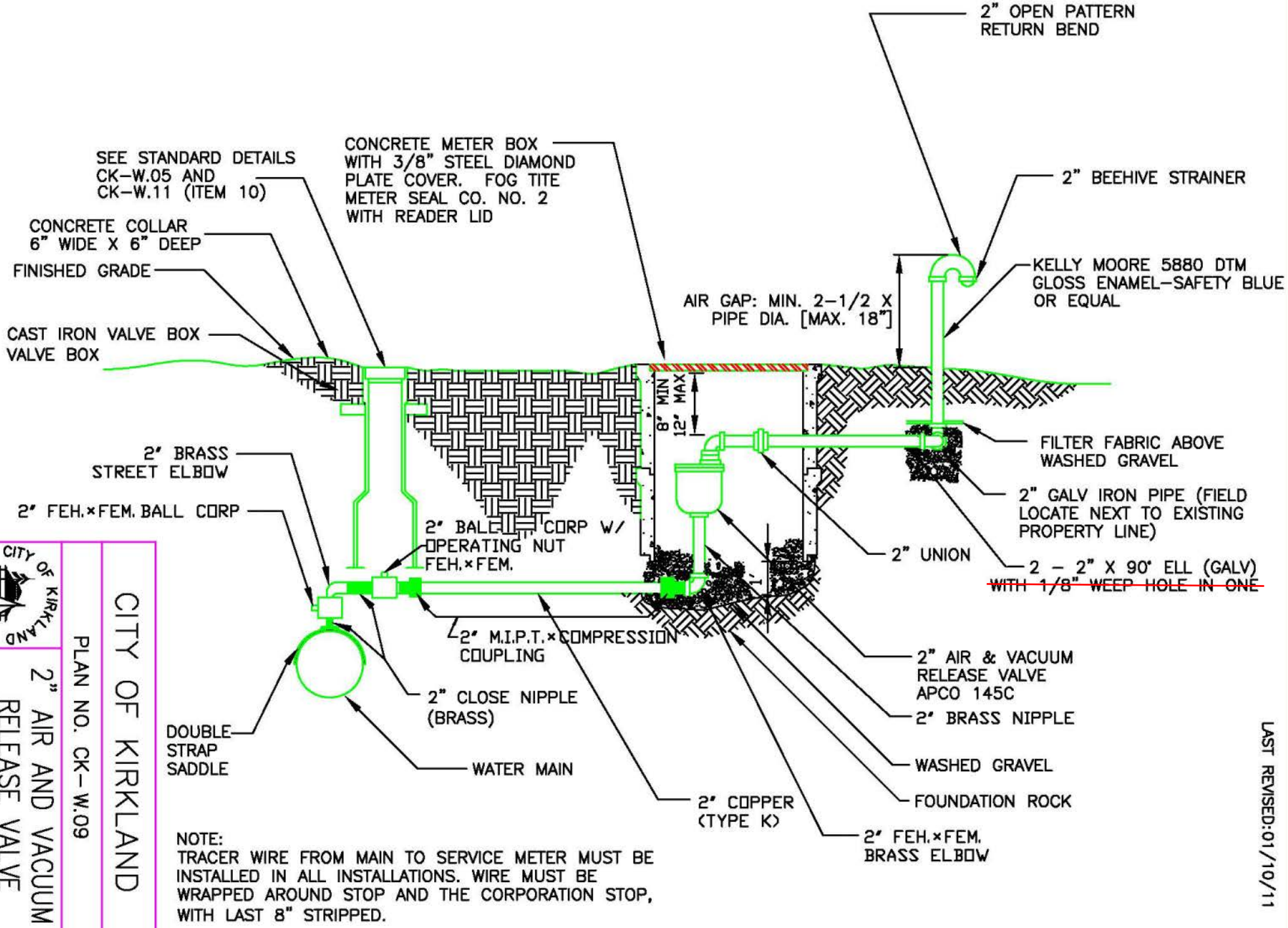

NOTE:
TRACER WIRE FROM MAIN TO SERVICE METER MUST BE INSTALLED IN ALL INSTALLATIONS. WIRE MUST BE WRAPPED AROUND STOP AND THE CORPORATION STOP, WITH LAST 8" STRIPPED.

CITY OF KIRKLAND

PLAN NO. CK–W.09

2" AIR AND VACUUM RELEASE VALVE ASSEMBLY

CITY OF KIRKLAND WASHINGTON

LAST REVISED:01/10/11

LAST REVISED:02/01/10

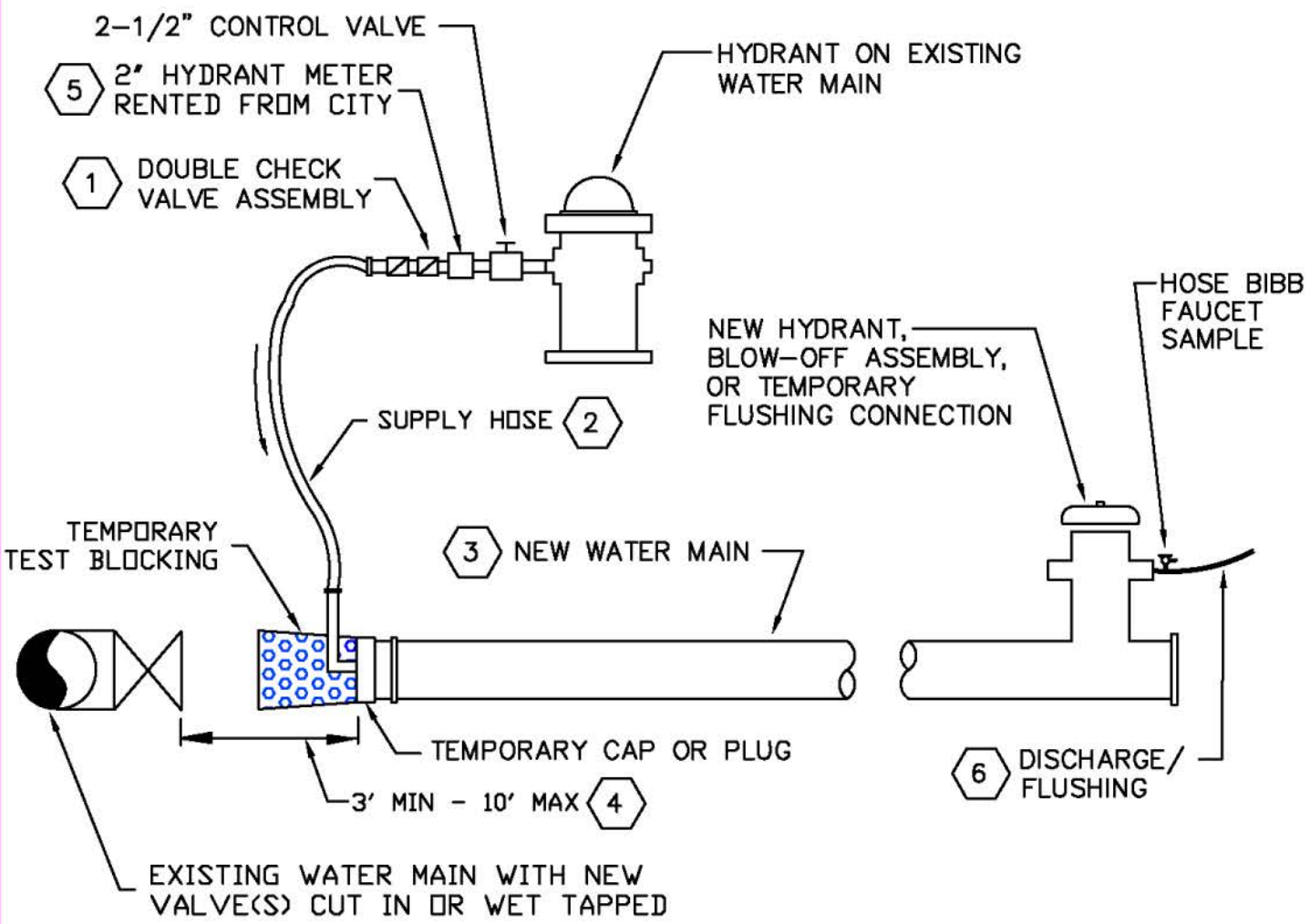

NOTES:

1. AN APPROVED BACKFLOW PREVENTION ASSEMBLY SHALL BE INSTALLED BETWEEN THE EXISTING AND NEW WATER LINES DURING DISINFECTION AND FLUSHING OF NEW WATERMAIN.

2. THE BACKFLOW PREVENTION ASSEMBLY AND SUPPLY HOSE MUST BE DISCONNECTED DURING HYDROSTATIC PRESSURE TESTING OF THE NEW MAIN.

3. THE NEW WATERMAIN SHALL BE CONNECTED TO THE EXISTING SYSTEM ONLY AFTER NEW MAIN IS FLUSHED, DISINFECTED AND SATISFACTORY BACTERIOLOGICAL SAMPLE RESULTS ARE OBTAINED.

4. THE INTERIORS OF ALL PIPES AND FITTINGS TO BE USED IN FINAL CONNECTION MUST BE SWABBED OR SPRAYED WITH A 1% AVAILABLE CHLORINE SOLUTION.

5. 2" HYDRANT METER SHALL BE OBTAINED FROM THE CITY OF KIRKLAND PUBLIC WORKS DEPARTMENT.

6. DISCHARGE FLUSHING TO SEWER ONLY. PROVIDE AIR GAP AT DISCHARGE.

CITY OF KIRKLAND	
PLAN NO. CK-W.10	
CITY OF KIRKLAND WASHINGTON	FILLING NEW WATER MAINS

LAST REVISED:02/01/10

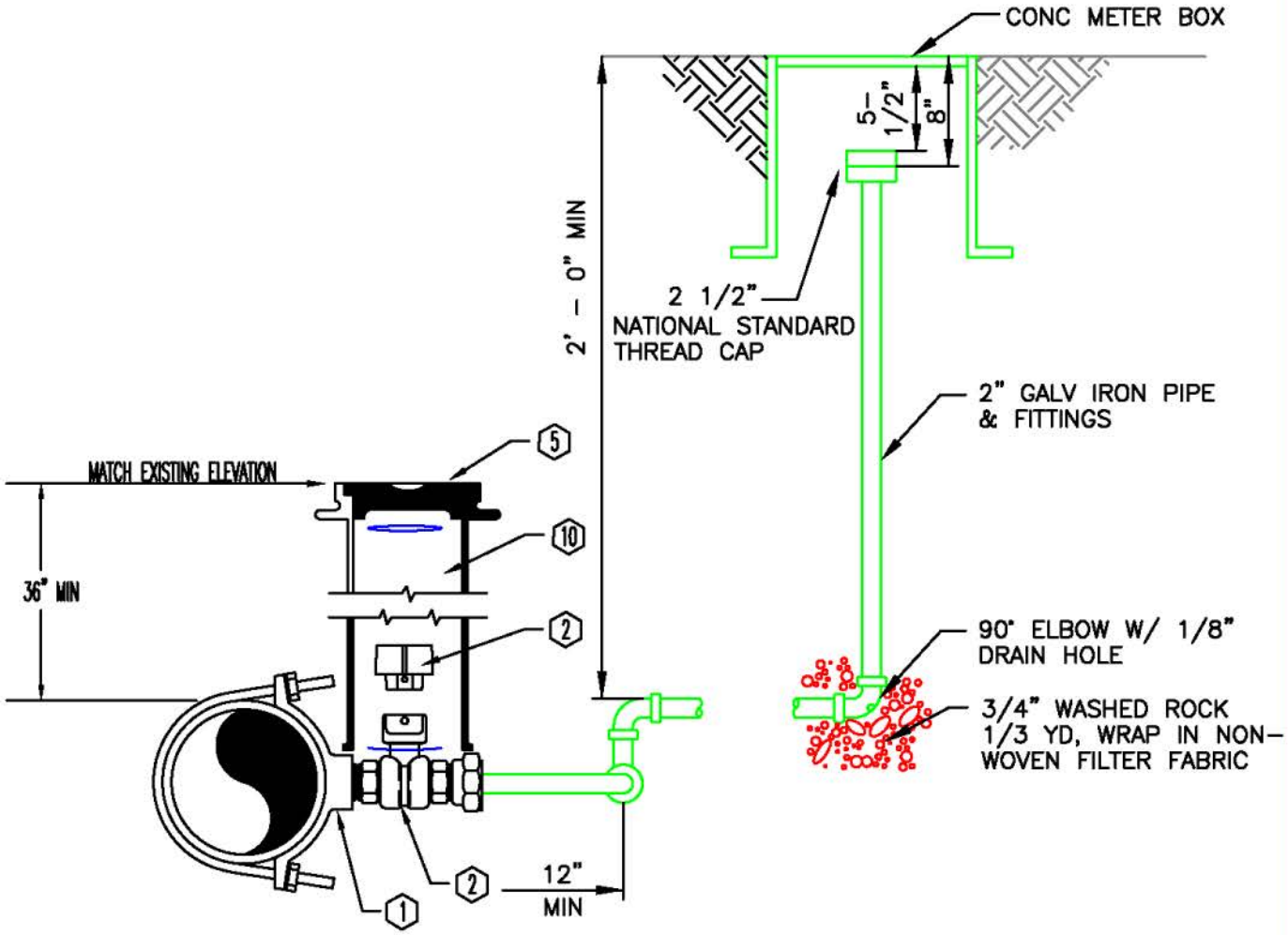

BLIND FLANGE

WATER SERVICE STANDARDS
1-1/2" & 2" Copper Services

DESCRIPTION	MAKER OR RATING	2"
1. Double Strap Saddle	Romac or Equal	202 IPT
2. Ball Valve-2" Operating Nut w/Cotter Pin	Ford or equal	B11-777 w/Qt67
5. Valve Box	Rich or Equal (940)	
10. 2" Marker	PVC	

NOTES:

1. IF MAIN WILL BE EXTENDED IN THE FUTURE, A MAINLINE GATE VALVE IS TO BE INSTALLED A MINIMUM OF ONE FULL LENGTH OF PIPE UPSTREAM OF THE B.O.

2. A BLOW OFF MAY NOT BE USED ON A MAIN LINE PERMANENTLY DEAD ENDED – FIRE HYDRANT ONLY.

CITY OF KIRKLAND

PLAN NO. CK-W.11

CITY OF KIRKLAND WASHINGTON

2" BLOW-OFF ASSEMBLY

LAST REVISED:01/05/01

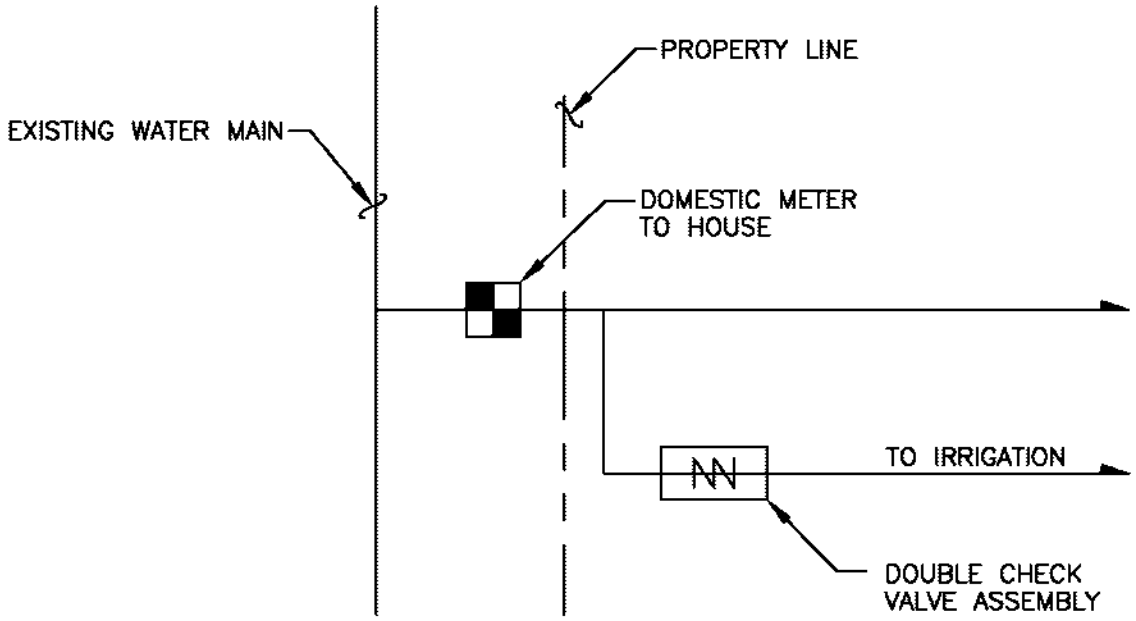

SINGLE FAMILY

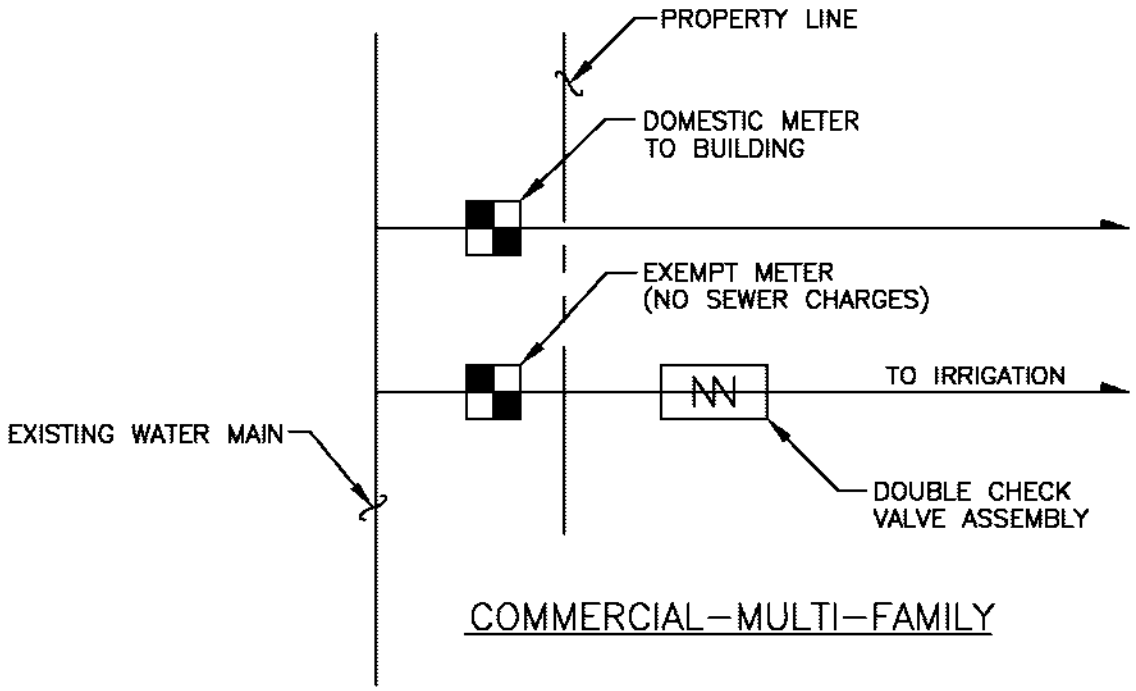

COMMERCIAL–MULTI–FAMILY

CITY OF KIRKLAND	
PLAN NO. CK–W.12	
CITY OF KIRKLAND WASHINGTON	TYPICAL IRRIGATION CONFIGURATION

LAST REVISED: 11/30/99

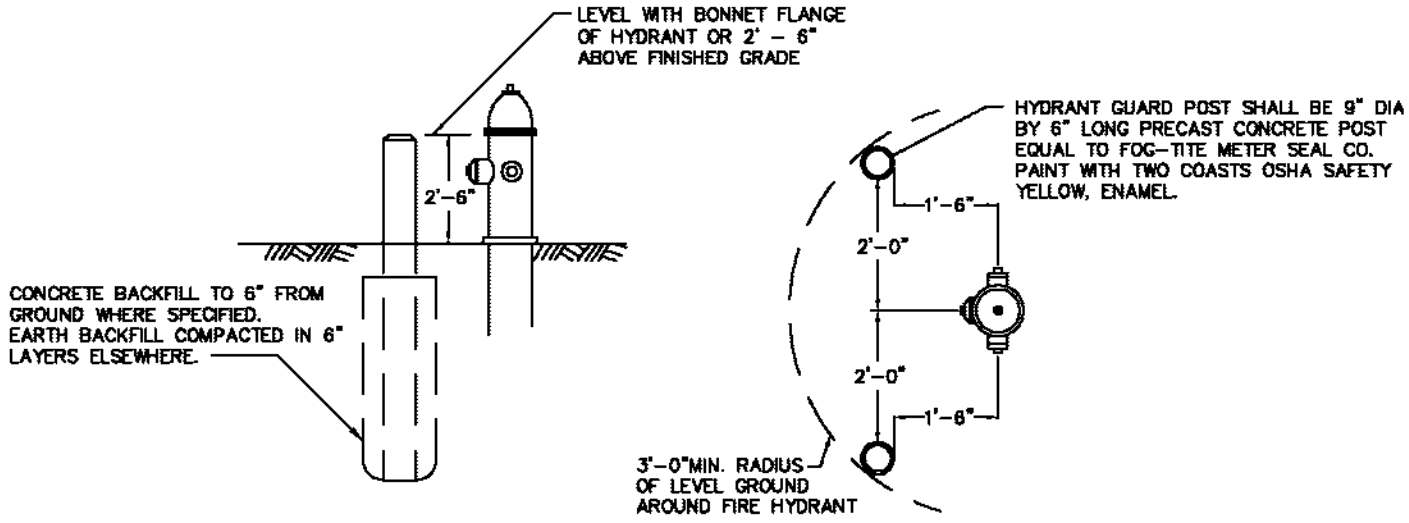

ELEVATION PLAN

FIRE HYDRANT GUARD POST

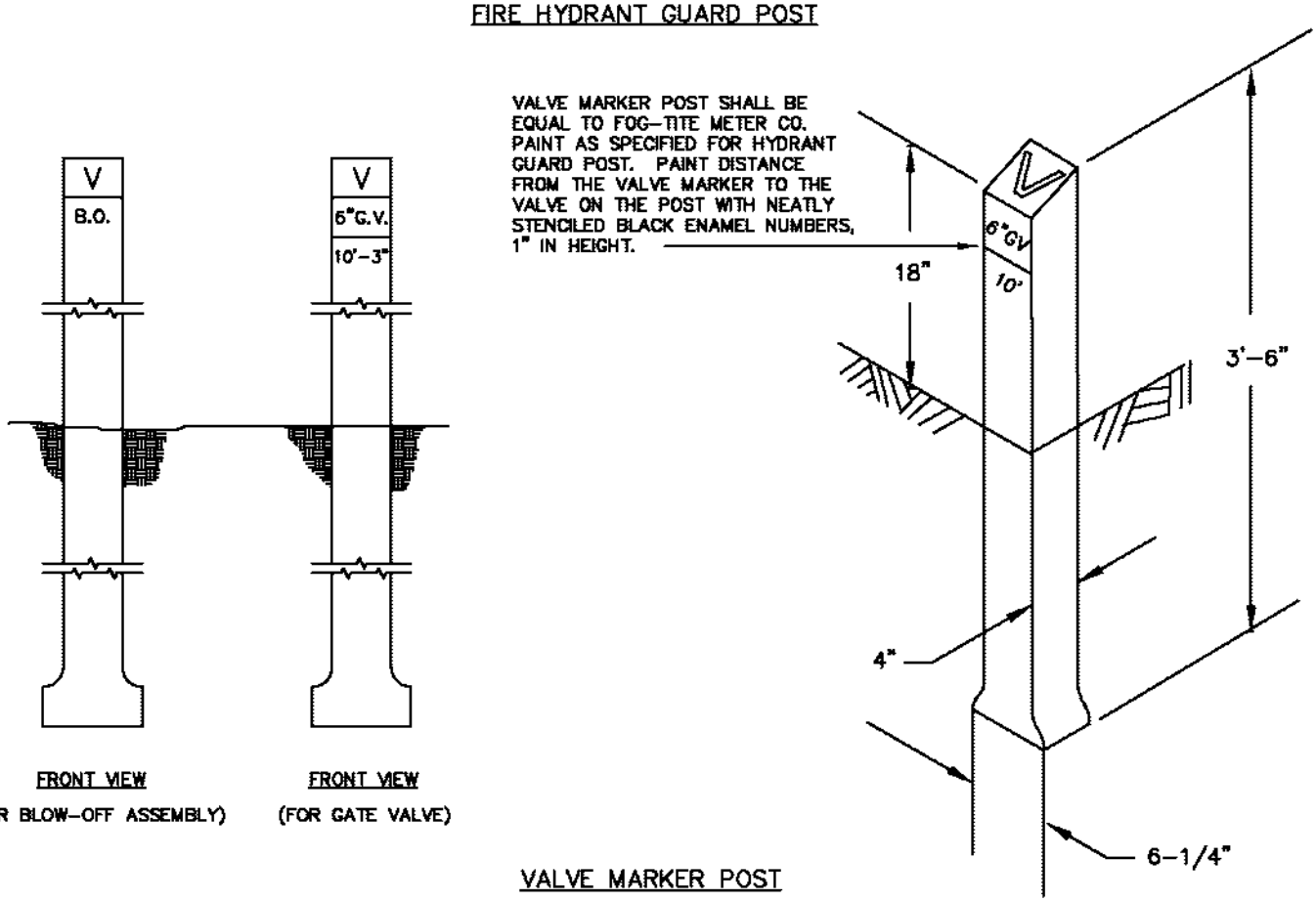

FRONT VIEW (FOR BLOW–OFF ASSEMBLY)

FRONT VIEW (FOR GATE VALVE)

VALVE MARKER POST

NOTES:

1. GUARD POSTS TO BE INSTALLED ONLY AS DIRECTED BY CITY OF KIRKLAND.
2. VALVE MARKERS TO BE USED FOR BLOW OFF AND MAINLINE VALVES OUTSIDE PAVED AREAS.

CITY OF KIRKLAND	
PLAN NO. CK–W.13	
CITY OF KIRKLAND WASHINGTON	HYDRANT PROTECTION AND VALVE MARKER POST

LAST REVISED:01/18/13

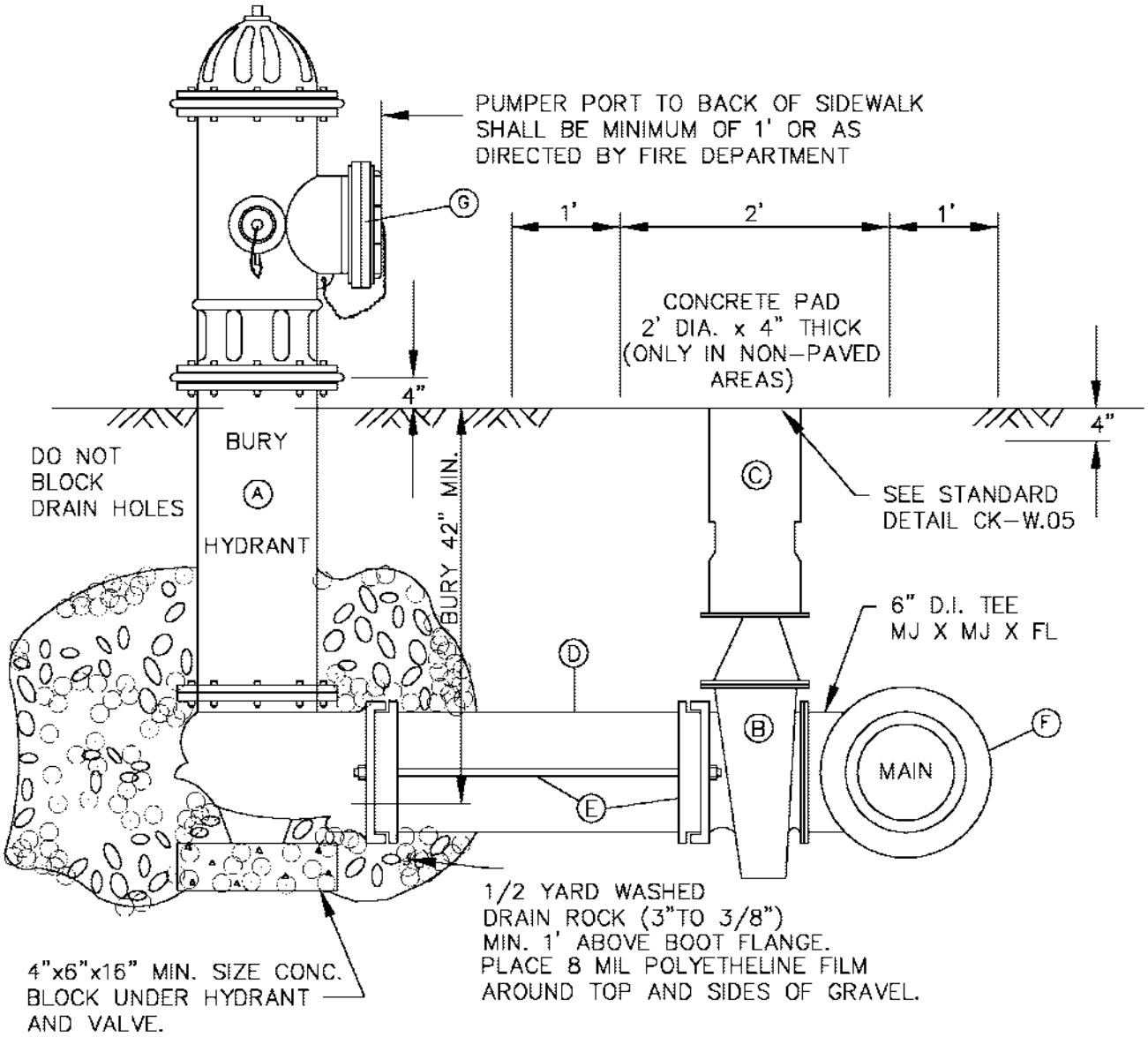

A. 1-5 1/4" M.V.O. HYDRANT WITH 2-2 1/2" N.S.T. AND 1-4" PUMPER, SEATTLE STANDARD THREAD-M.J. INLET, WITH LUGS, BRASS TO BRASS SUB-SEAT.

B. 1-AUXILIARY GATE VALVE: 6" AWWA C509 OR C515, RESILIENT SEAT, "O" RING STEM SEAL, M.J.xFL. WITH LUGS.

C. 1-TWO-PIECE CAST IRON VALVE BOX EQUAL TO RICH SEATTLE TYPE #940.

D. 1-6" DUCTILE IRON CLASS 52 CEMENT-LINED PIPE, LENGTH TO FIT.

E. 2 - 3/4" GALVANIZED STEEL SHACKLE RODS, TAR SEALED AFTER ASSEMBLY.

F. 1/4 CY - 1:3:6: CONCRETE MIX, POUR IN PLACE TO BLOCK. MAINTAIN CLEARANCE FOR BOLTS.

G. 5" X 4" FEMALE SEATTLE STANDARD THREAD RIGID 5" STORZ ADAPTOR WITH ALL CAPS AND CHAINS OR CABLES. ADAPTOR MATERIAL TO BE ANODIZED ALUMINUM.

NOTES:

1. FIRE HYDRANT EXTENSION, IF REQUIRED.
2. FIRE HYDRANT TO BE PAINTED WITH TWO COATS OF HIGH GLOSS OSHA SAFETY YELLOW ENAMEL PAINT.
3. INSTALL BLUE - TYPE 2 R.P.M. ON STREET SURFACE ADJACENT TO MAIN PORT.

CITY OF KIRKLAND	
PLAN NO. CK-W.14	
CITY OF KIRKLAND WASHINGTON	FIRE HYDRANT ASSEMBLY

LAST REVISED: 11/30/99

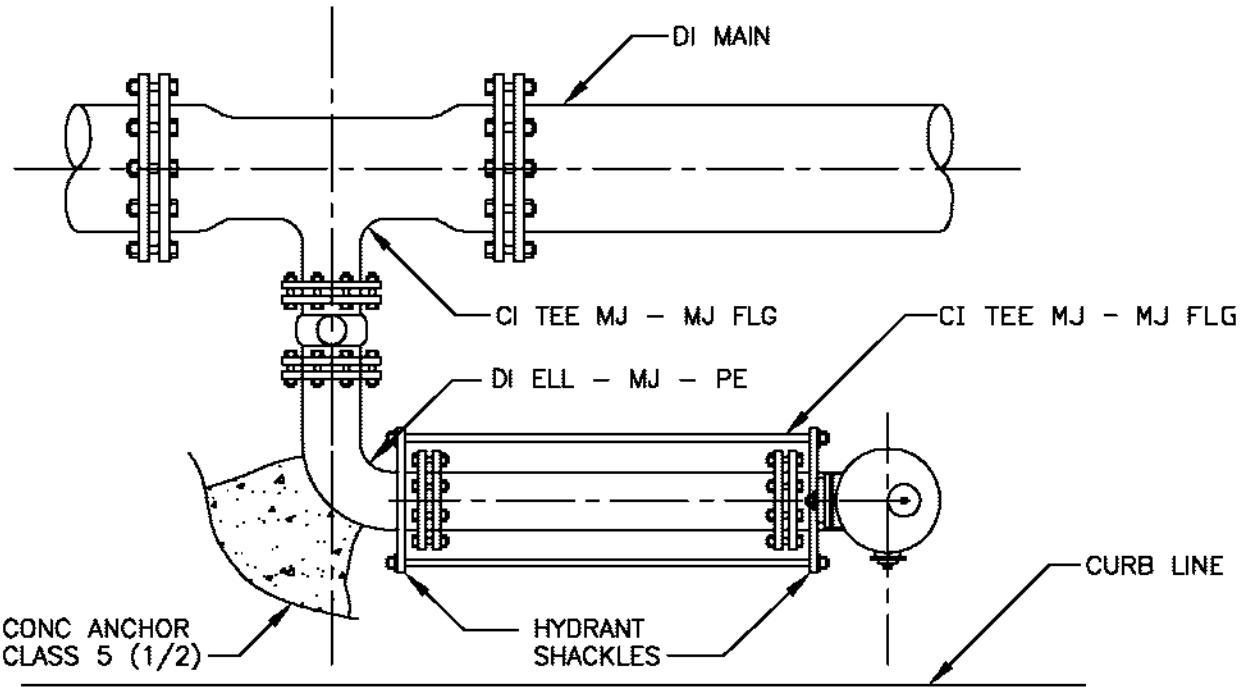

PLAN

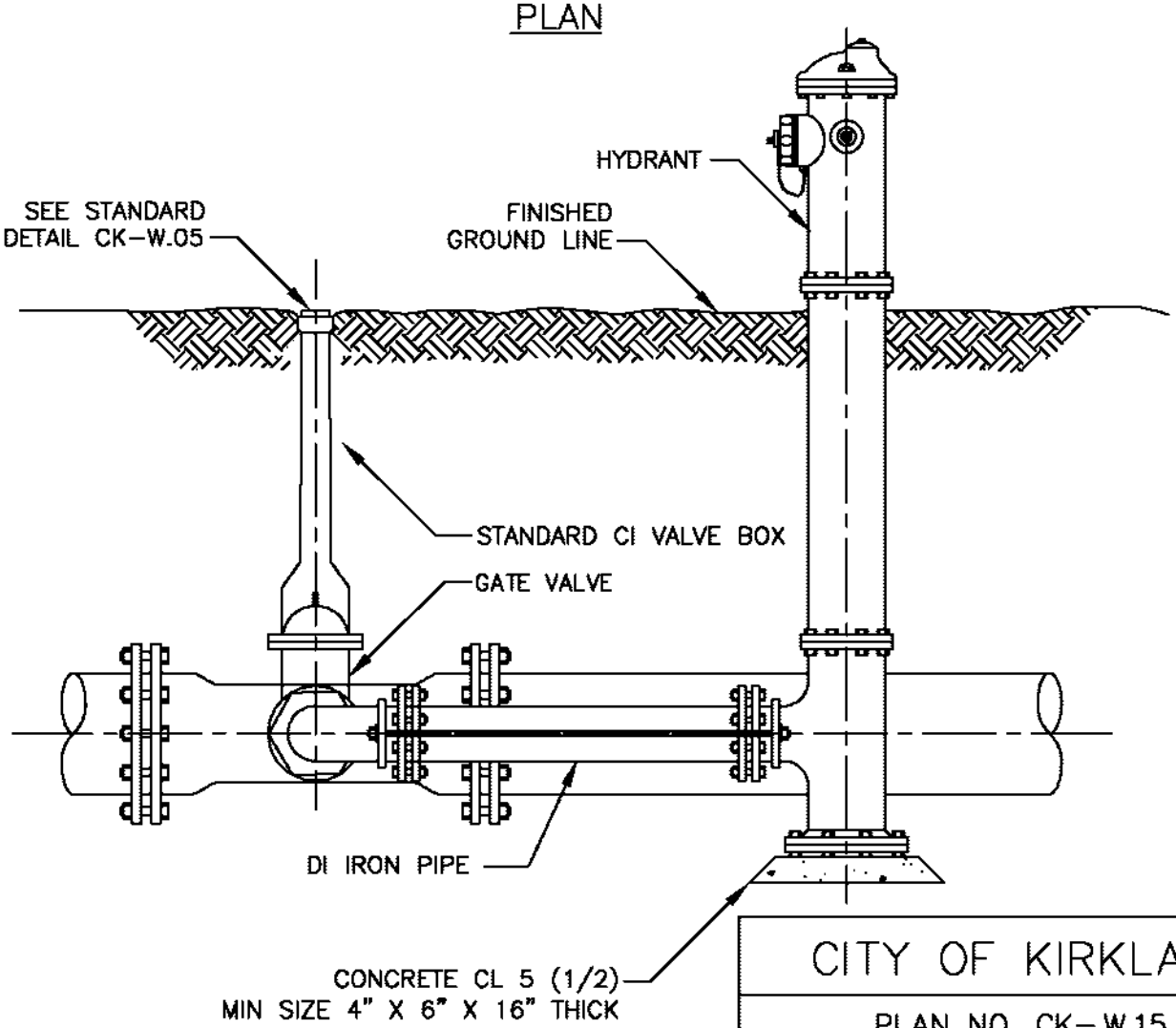

SIDE VIEW

CITY OF KIRKLAND

PLAN NO. CK–W.15

CITY OF KIRKLAND WASHINGTON

OFFSET
HYDRANT
LOCATION

LAST REVISED: 11/30/99

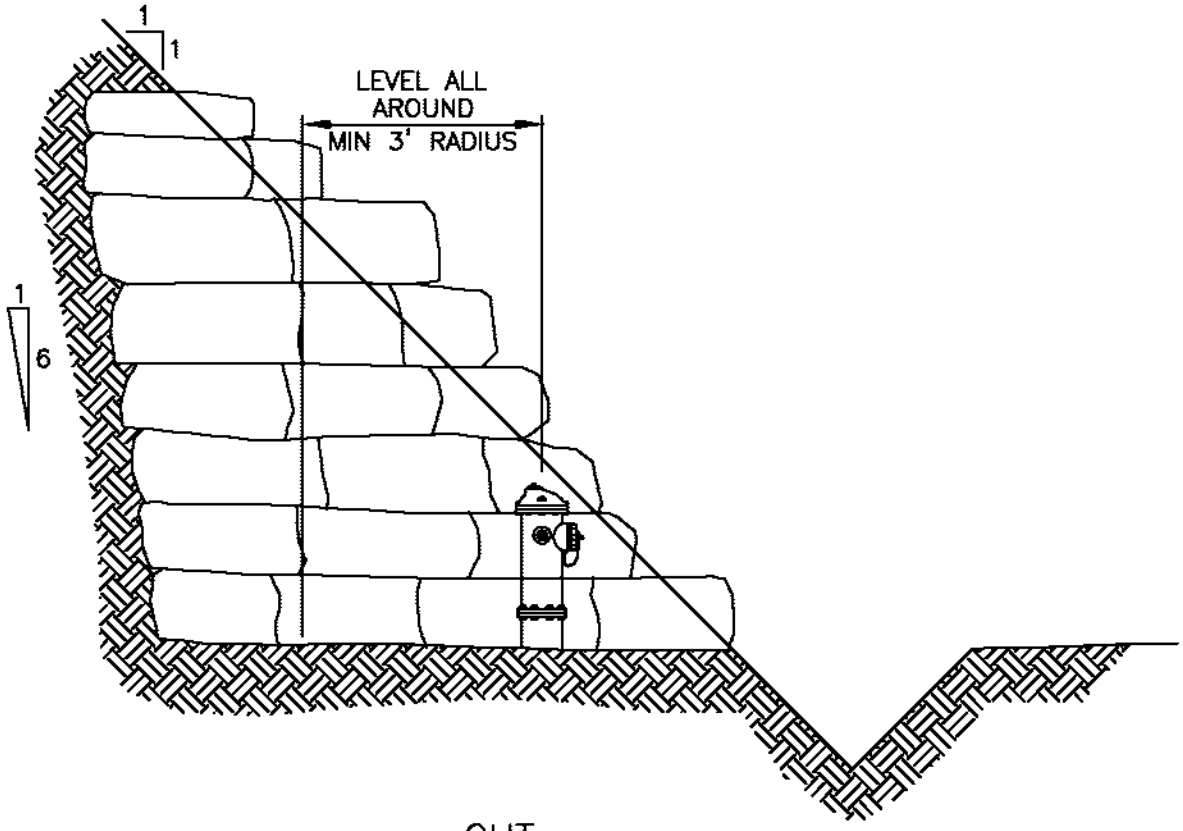

CUT

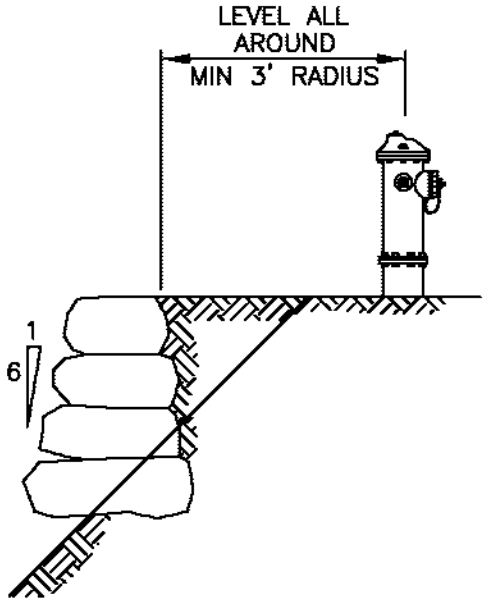

FILL

CITY OF KIRKLAND	
PLAN NO. CK–W.16	
CITY OF KIRKLAND WASHINGTON	HYDRANT LOCATION IN CUT OR FILL

LAST REVISED:02/01/10

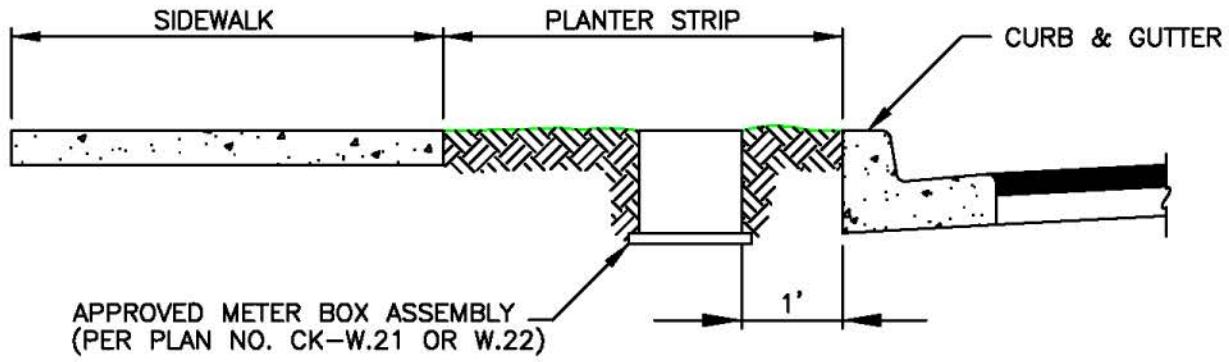

INSTALLATION IN PLANTER STRIP 3' OR WIDER

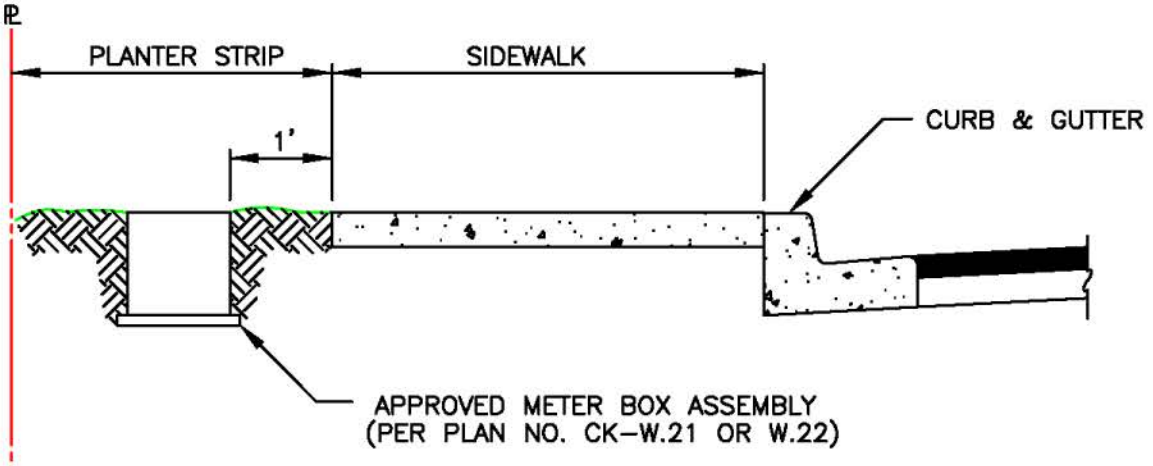

INSTALLATION BEHIND SIDEWALK

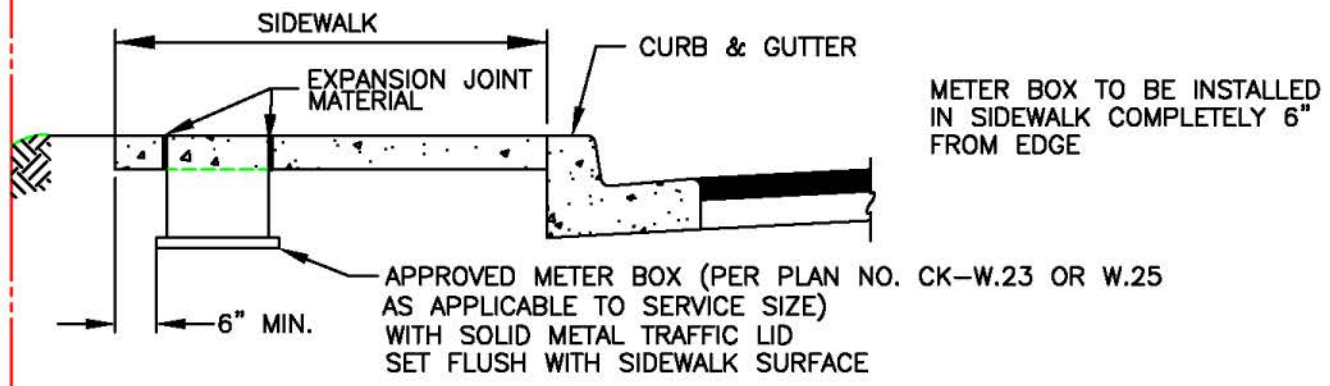

INSTALLATION IN SIDEWALK

CITY OF KIRKLAND	
PLAN NO. CK– W.17	
CITY OF KIRKLAND WASHINGTON	WATER METER PLACEMENT DETAILS

LAST REVISED:01/31/12

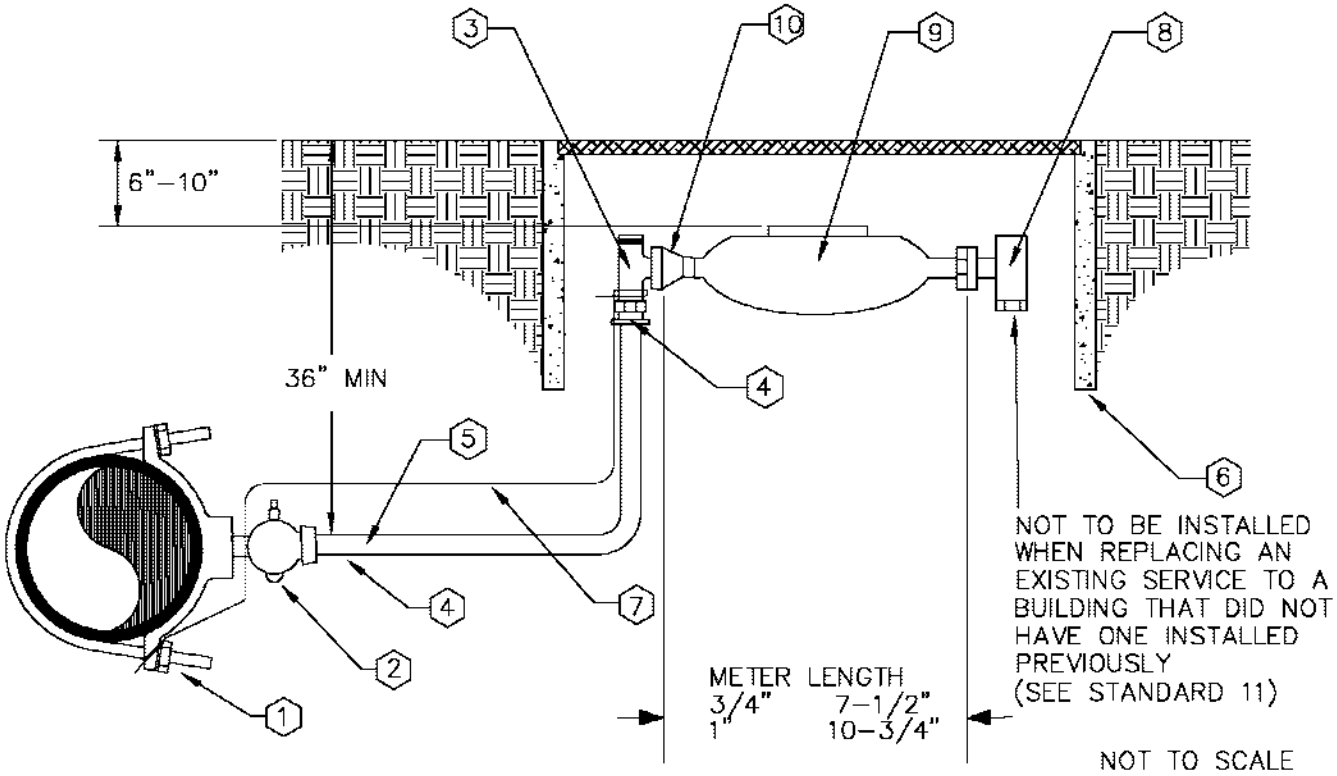

WATER SERVICE STANDARDS

DESCRIPTION	MAKER OR TYPE	1"
1. SINGLE STRAP SADDLE	STAINLESS ROMAC OR EQUAL	101 1PT
2. CORP STOP	FORD OR EQUAL	f–1101–4G IPT X PACK JOINT
3. ANGLE STOP	FORD OR EQUAL	KV63–444W (1"x1") MALE THREAD
4. INSERTS	FORD OR EQUAL	#72 STAINLESS STEEL
5. PLASTIC PIPE	POLYETHYLENE ASTM D2239	IPS–SDR–7(PE3408)
6. METER BOX	CARSON OR EQUAL	CK–W.21 (OR W.23 W/APPROVAL)
7. TRACER WIRE	CU SOLID WIRE	14 GAUGE
8. CHECK VALVE	---------	CITY TO INSTALL
9. METER	---------	CITY TO INSTALL
10. 1" x 3/4" METER ADAPTOR (FOR 3/4" MTR)	FORD OR EQUAL #A24	CITY TO INSTALL UNLESS A CIP PROJECT
11. 1" METER	FORD OR EQUAL L31–44	CONTRACTOR TO INSTALL
3/4" METER	FORD OR EQUAL L31–24	

NOTES:

1. ALL FITTINGS MUST BE FORD OR EQUAL.
2. TRACER WIRE FROM MAIN TO SERVICE METER MUST BE INSTALLED IN ALL INSTALLATIONS. WIRE MUST BE WRAPPED AROUND ANGLE STOP AND THE CORPORATION STOP, WITH LAST 8" STRIPPED.
3. POLY SERVICE LINE IS TO BE CONTINUOUS FROM MAIN TO METER–NO SPLICES OF ANY KIND.
4. PLASTIC PIPE TO BE 1" MINIMUM FROM MAIN TO METER.
5. METERS SHALL NOT BE LOCATED IN CONCRETE OR ASPHALT PAVING UNLESS UNAVOIDABLE.
6. THE ANGLE STOP SHALL BE IN A POSITION THAT RESULTS IN THE METER BEING CENTERED DIRECTLY BENEATH THE METER READING LID.

CITY OF KIRKLAND

PLAN NO. CK–W.18

CITY OF KIRKLAND WASHINGTON

3/4" & 1" WATER METER SERVICE INSTALLATION

LAST REVISED:01/30/09

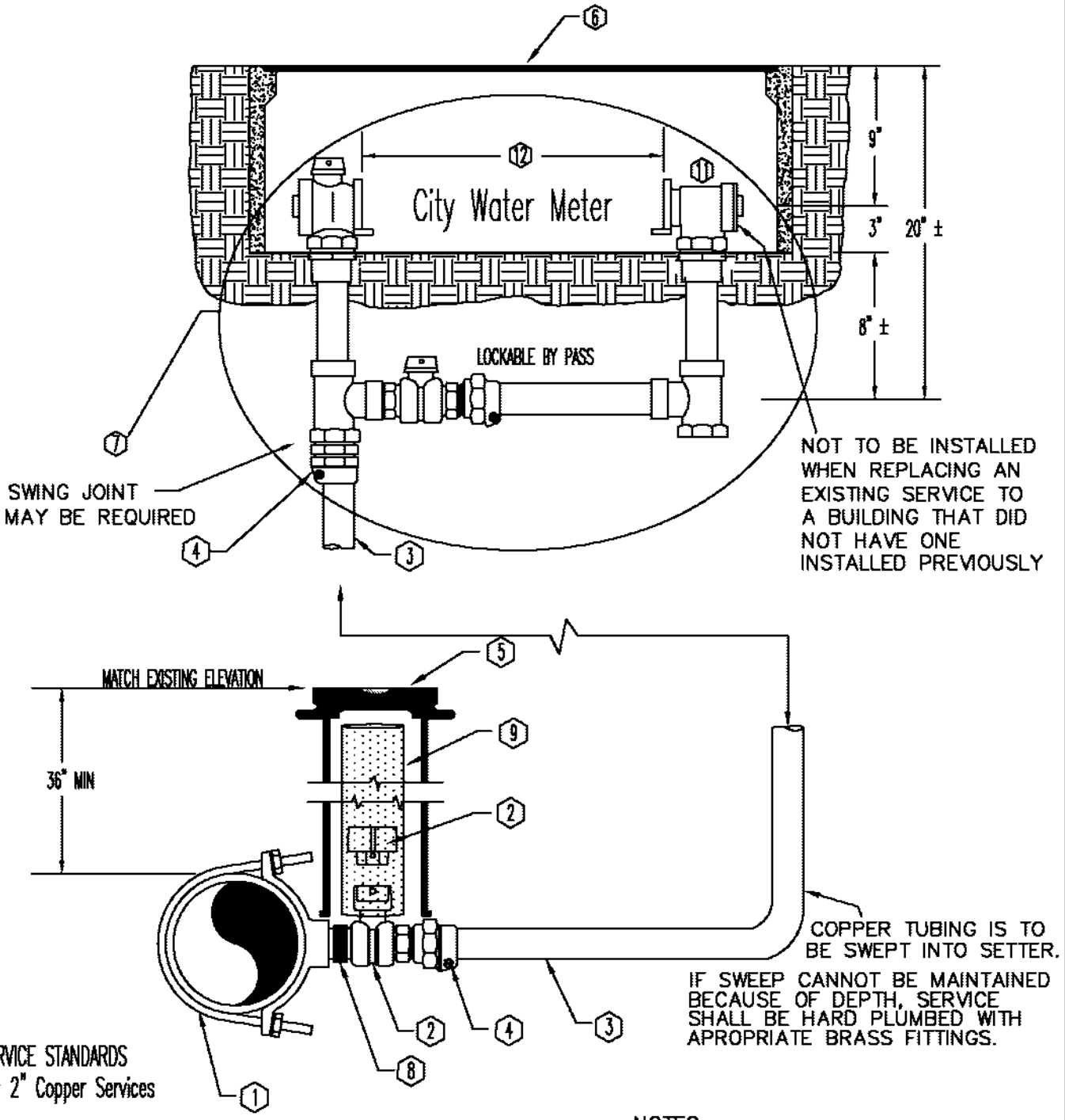

WATER SERVICE STANDARDS
1-1/2" & 2" Copper Services

DESCRIPTION	MAKER OR RATING	1-1/2"	2"
1. Double Strap Saddle	Romac or Equal	202 IPT	202 IPT
2. Ball Valve-2" Operating Nut w/Cotter Pin	Ford or equal	B11-666 w/QN67	B11-777 w/QN67
3. Pipe - Soft Copper Tubing , Type K	ASTM B-88		
4. Coupling Male	Ford or Equal	C84-66	C84-77
5. Valve Box	Rich or Equal (940)		
6. Meter Box	Carson or Equal	1324-15L	1324-15L
7. Meter Setter w/Lockable Bypass	Ford or Equal	VBH86-12B	VBH87-12B
8. Brass Nipple (3")		1-1/2"	2"
9. 2" Sleeve	PVC		
10. City to Install Meter			
11. New Construction Must Have Check Valve Existing Building Before 1990 Construction Must Have Angle Stop on Both Sides.			
12. Distance Between Flanges		13-1/4"	17-1/4"

NOTES:

1. THREAD SEALANT AND TEFLON TAPE MUST BE USED ON ALL FITTINGS.
2. METERS SHALL NOT BE LOCATED IN CONCRETE OR ASPHALT PAVING.

CITY OF KIRKLAND

PLAN NO. CK-W.19

CITY OF KIRKLAND WASHINGTON

1-1/2" & 2" WATER METER SERVICE INSTALLATION

LAST REVISED: 01/24/2013

MATERIAL LIST, COPPER BY-PASS

1. 4-3/4" SHACKLE RODS (TOP & BOTTOM)
2. 2-2" ROMAC SADDLE
3. 2-4" DI GATE VALVES, FL, W/ HW
   EQUAL TO M&H RESILIENT SEAT
4. 1-4"X3" DI REDUCER, FL (3" METER ONLY)
5. 1-3" WATER METER (OR 4" AS REQ'D),
   INSTALLED EQUAL TO SENSUS OMNI
   C_2 WITH 17" LAY LENGTH
6. 1- DI ADAPTER FL X PE, LENGTH TO FIT CLASS 52
   3" WITH 3" METER
   4" WITH 4" METER
7. 1-DI COUPLE ADAPTER, FL,
   EQUAL TO ROMAC FCA 501
   3" X 4" WITH 3" METER
8. 6-2" MALE ADAPTERS, BRASS
   EQUAL TO FORD
9. 2-2", 90° ELBOWS, BRASS
10. 1-BALL VALVE W/ PADLOCK WING
    EQUAL TO FORD
11. 2-2"X4" NIPPLE, BRASS
12. 2" RIDGED COPPER PIPE, TYPE K
13. PRE-CAST CONCRETE UTILITY VAULT
    EQUAL TO UTILITY VAULT CO. 675-LA
14. 4" DI PIPE, FL
15. LADDER W/ 1' RUNGS
16. 2 LOCKING STEEL COVERS
    EQUAL TO U.V. CO. 57TL-2-332P (SLIP RESISTANT FINISH)
17. 4" PVC DRAIN SYSTEM TO STORM SYSTEM
    W/ CHECK VALVE
18. PIPE SUPPORTS EQUAL TO STANDON MODEL S89
19. EYE BOLTS

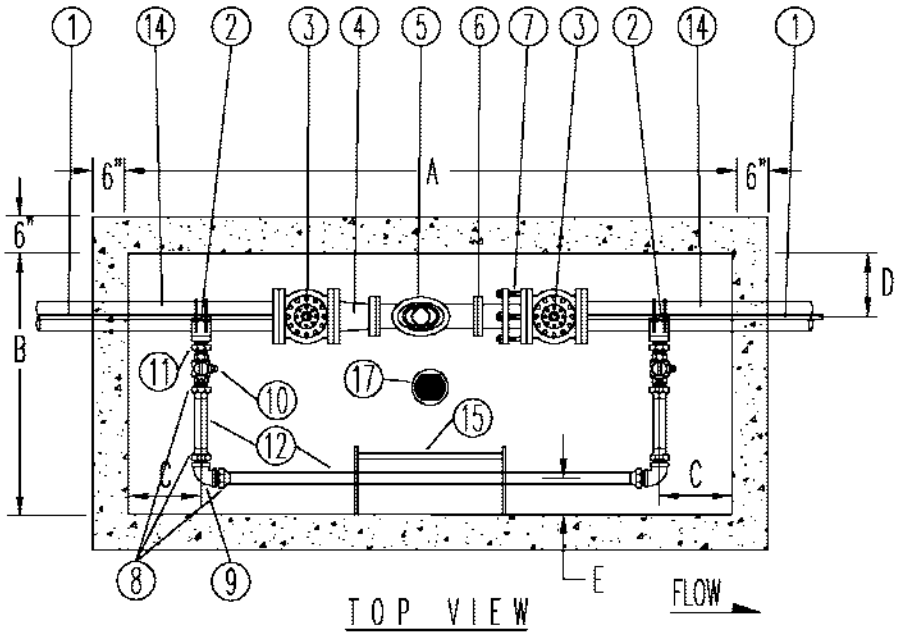

TOP VIEW

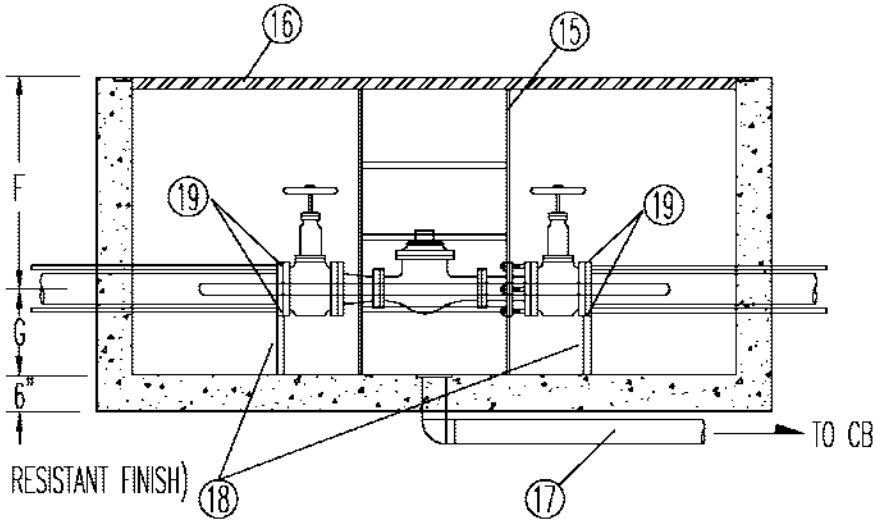

SIDE VIEW

NOTES

* METER MUST READ IN HUNDREDS OF CUBIC FEET
* VAULT WILL BE PRECAST W/ BOTTOM
* ALL PIPES & FITTINGS 4" AND LARGER SHALL BE CEMENT LINED
* PIPING FROM MAIN TO VAULT SHALL BE 4" ON 3" METER INSTALLATIONS
* TAPPING TEE WITH VALVE AS PER STANDARD DETAIL W.05, REQUIRED ON EXISTING MAINS
* 4" PVC DRAIN SYSTEM REQUIRED
* PIPE SUPPORTS TO BE ANCHORED TO FLOOR & BOLTED TO VALVES
* OUTSIDE VAULT - SHACKLE BACK TO APPROPRIATE LOCATION BASED ON CONDITION

VAULT DIMENSIONS AND PIPE PLACEMENT							
ITEM	A	B	C	D	E	F	G
DIMENSION	7'	4'	6"	12"	6"	2'-8"	1'

CITY OF KIRKLAND

PLAN NO. CK-W.20

CITY OF KIRKLAND WASHINGTON

3" & 4" WATER METER SERVICE INSTALLATION

LAST REVISED: 02/01/10

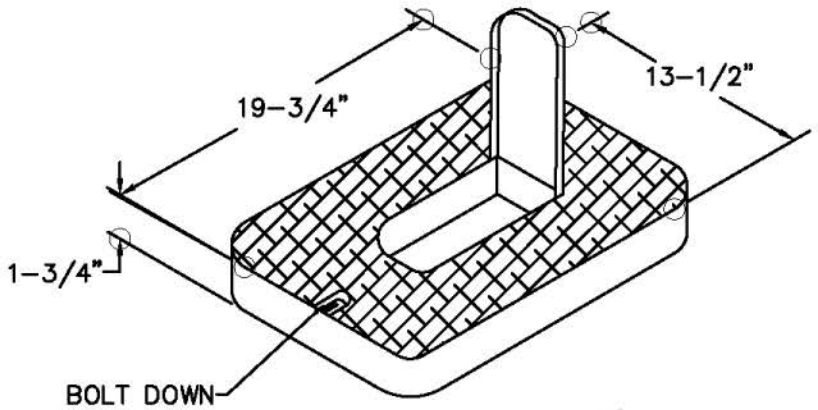

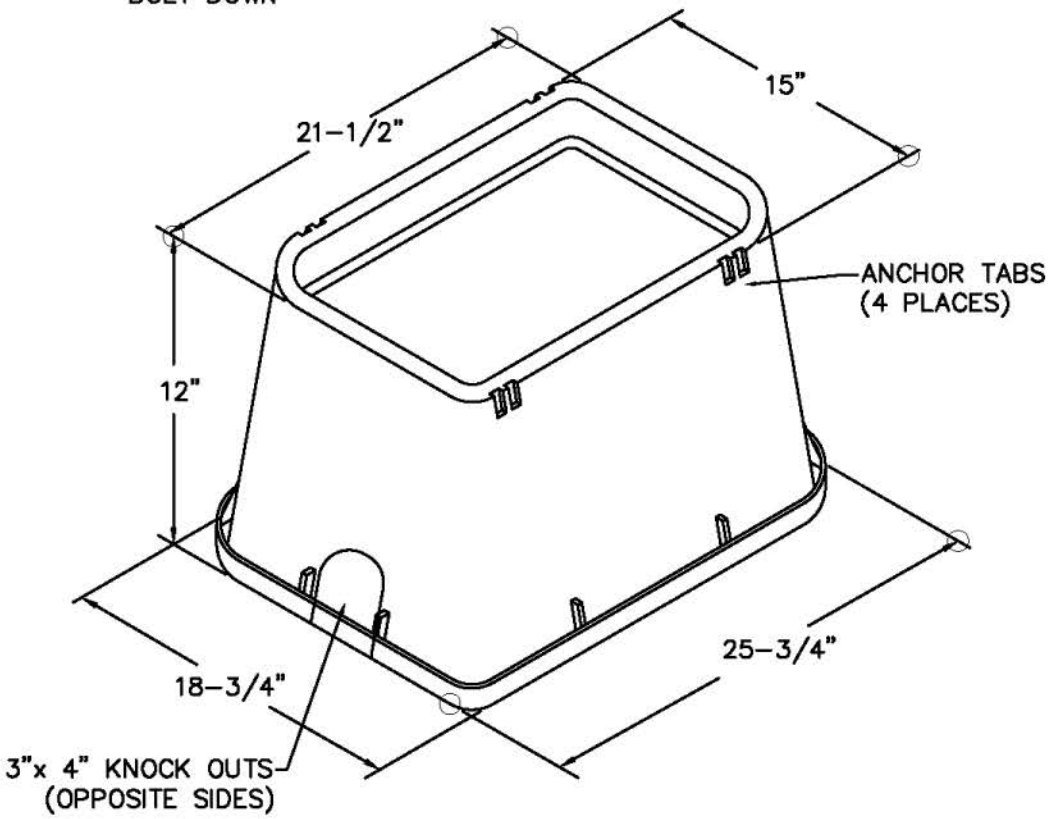

NOTES:

1. USE – CARSON MODEL 1220–12 WITH METER READING COVER OR EQUAL.
2. COVER MUST DISPLAY "W.M." OR EQUAL.
3. METER READING FLIP–UP LID SHALL BE PLASTIC.

CITY OF KIRKLAND

PLAN NO. CK– W.21

CITY OF KIRKLAND WASHINGTON

3/4" & 1" WATER METER BOX PLACED IN PLANTER

LAST REVISED:02/01/10

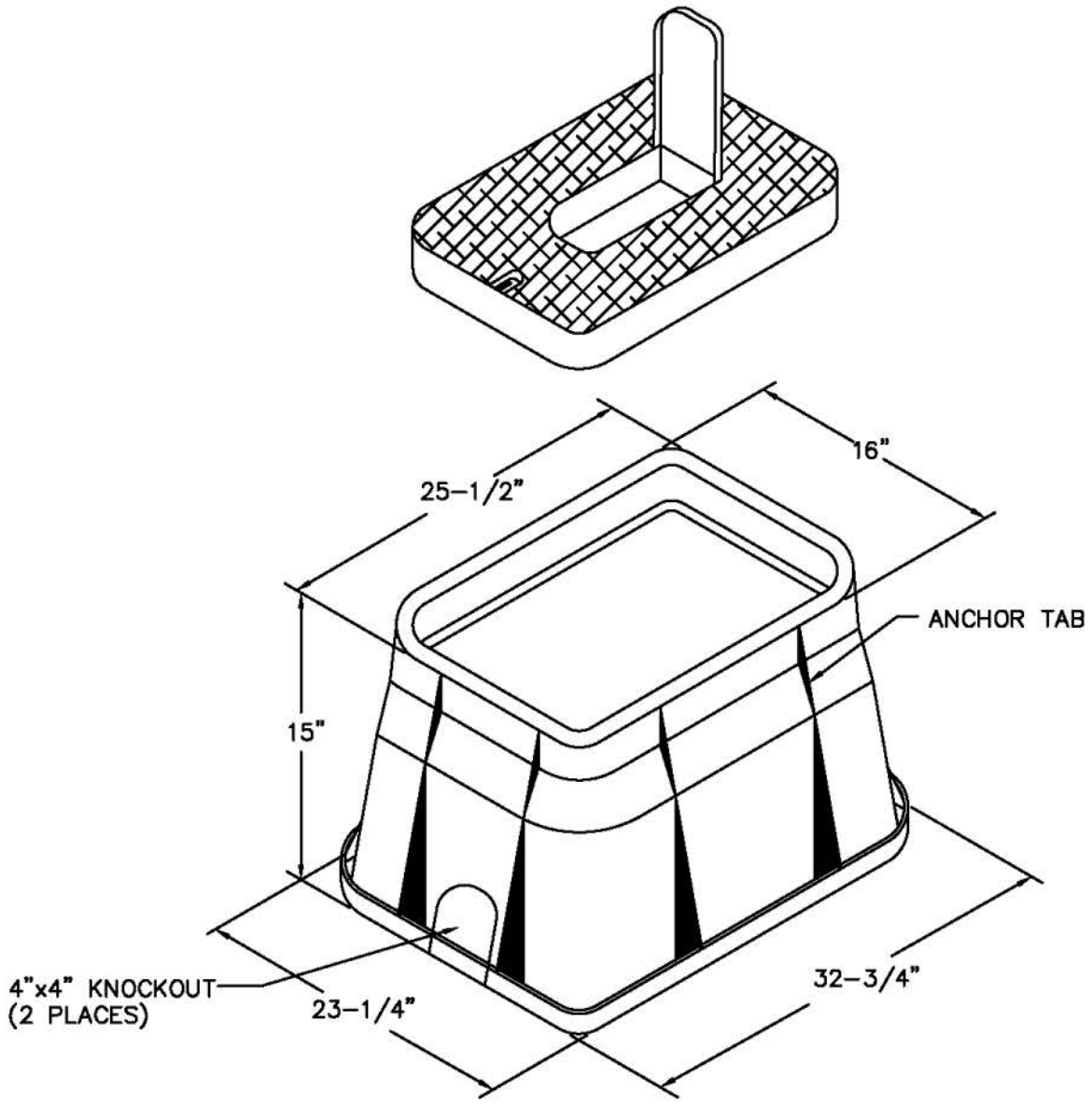

NOTES:

1. USE – CARSON MODEL 1324-15L WITH READING LID OR EQUAL
2. COVER MUST DISPLAY "W.M." OR EQUAL
3. METER READING FLIP-UP LID SHALL BE PLASTIC.

CITY OF KIRKLAND	
PLAN NO. CK-W.22	
CITY OF KIRKLAND WASHINGTON	1-1/2" & 2" WATER METER BOX PLACED IN PLANTER

LAST REVISED:02/01/10

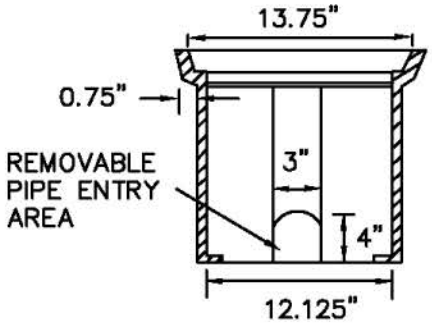

SHORT SIDE VIEW

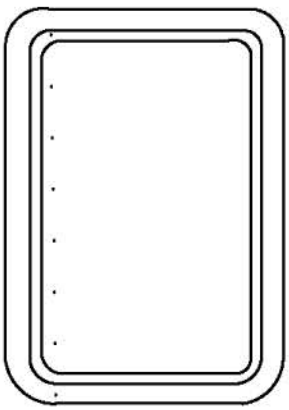

TOP VIEW

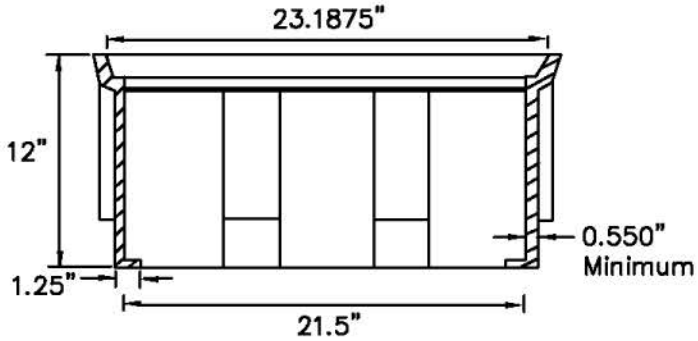

LONG SIDE VIEW

NOTE:

MID–STATES PLASTICS, INC. PART NUMBER MSBCF 1324–12 (or equal).

The Meter Box shall be high–density polyethylene of one–piece molded construction for durability and impact strength, and with a ductile iron cover (with flip–up meter reading window) installed shall be able to bear a 20,000lb load in a wheel load; and shall have a wall thickness of no less than 0.550". The Meter Box shall be black on the exterior to prevent UV degredation, and bright white on the interior to reflect light and ease meter reading service.

CITY OF KIRKLAND	
PLAN NO. CK– W.23	
CITY OF KIRKLAND WASHINGTON	3/4" AND 1" WATER METER TRAVEL BOX

LAST REVISED: 11/30/99

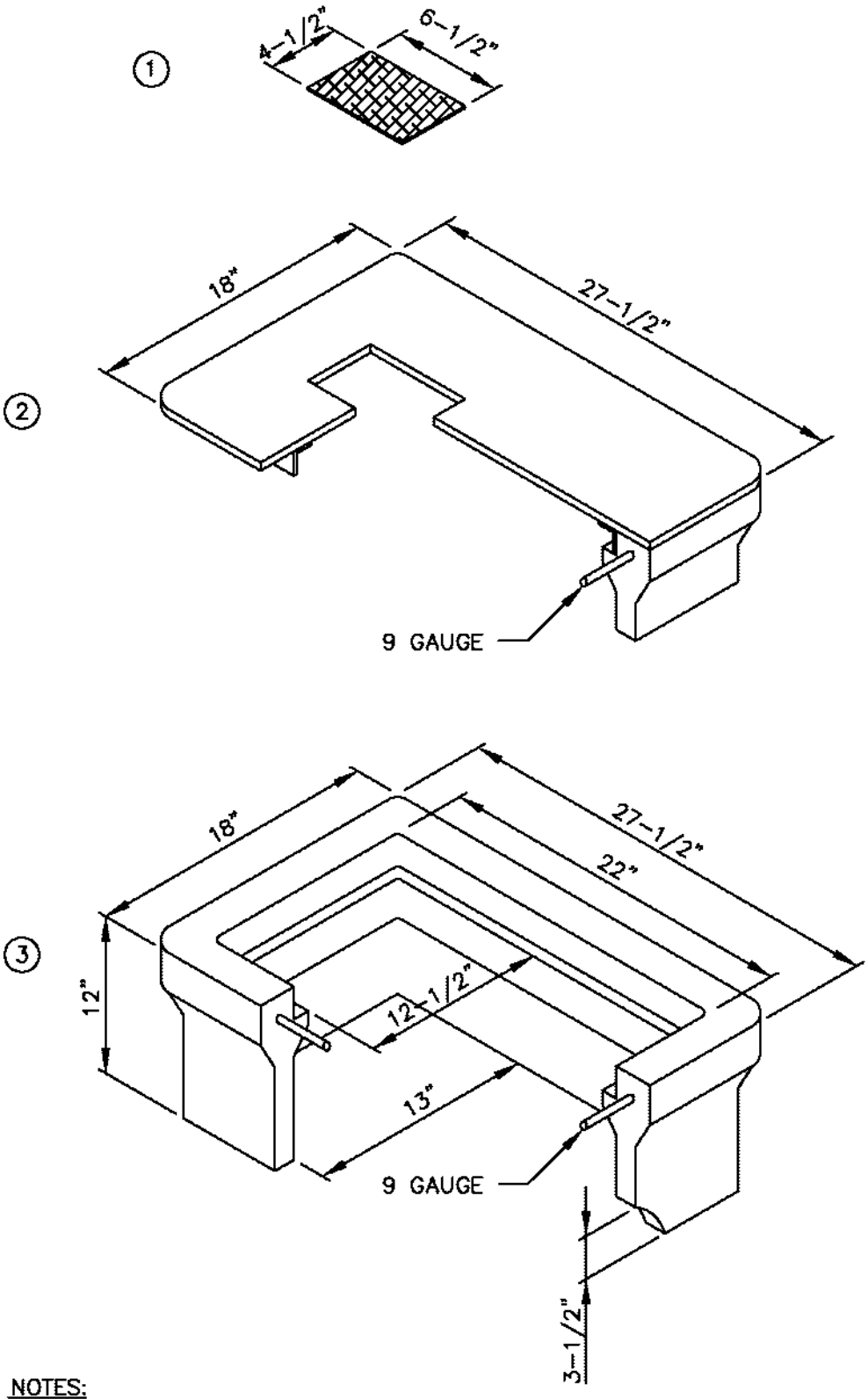

NOTES:

METER BOX AND COVER ARE AS MANUFACTURED BY METER BOX EQUIPMENT OR APPROVED EQUAL:

1. METAL READING LID NO. 68-RL
2. STEEL COVER NO. 68-TO
3. METER BOX NO. 68-BO

CITY OF KIRKLAND	
PLAN NO. CK- W.24	
CITY OF KIRKLAND WASHINGTON	1" WATER METER BOX PLACED IN A SIDEWALK OR DRIVEWAY

LAST REVISED: 1/31/12

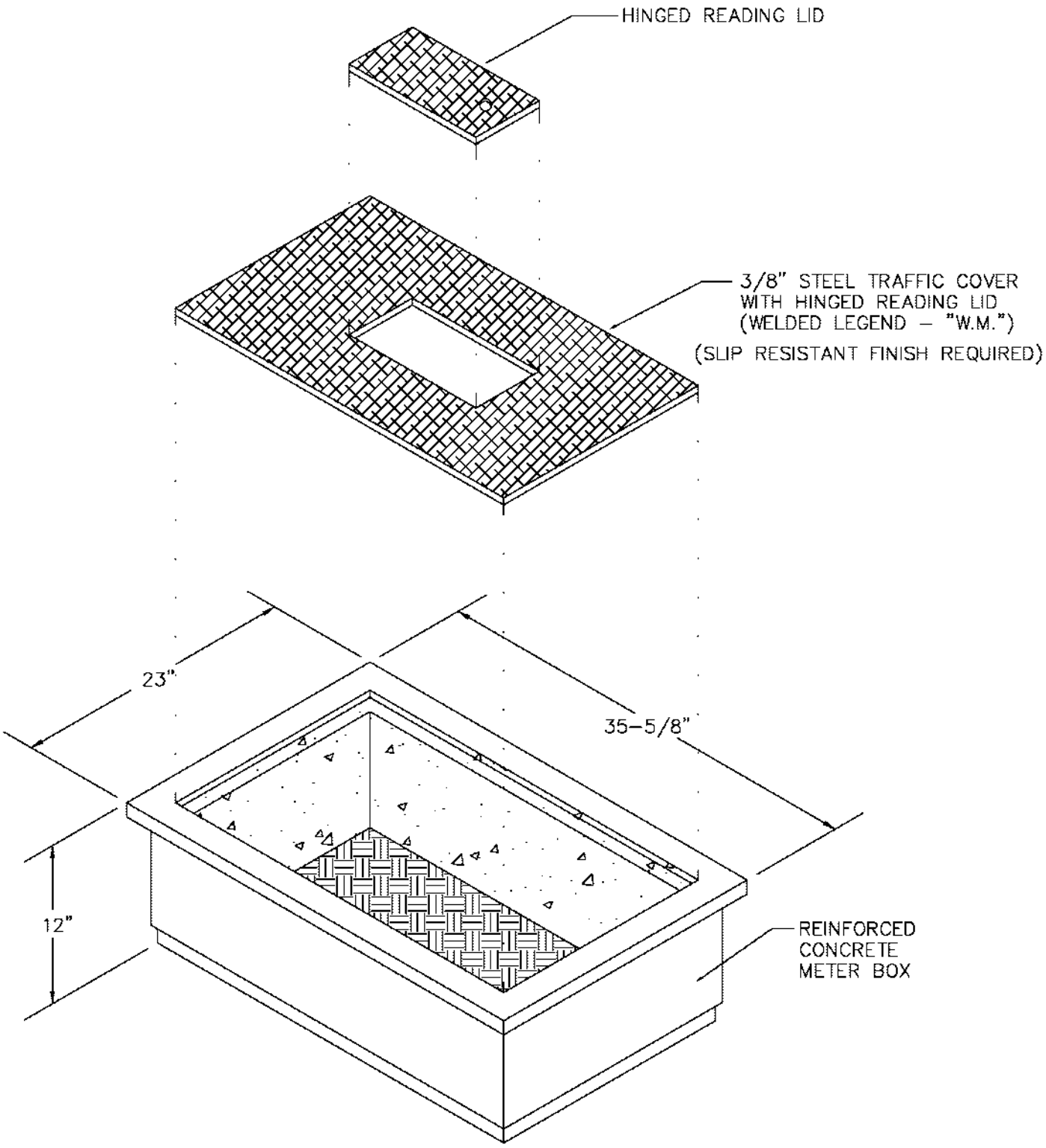

NOTE:

1. USE – FOG TITE #2 OR EQUAL

CITY OF KIRKLAND	
PLAN NO. CK– W.25	
CITY OF KIRKLAND WASHINGTON	1–1/2" OR 2" WATER METER TRAVEL BOX

LAST REVISED: 1/25/07

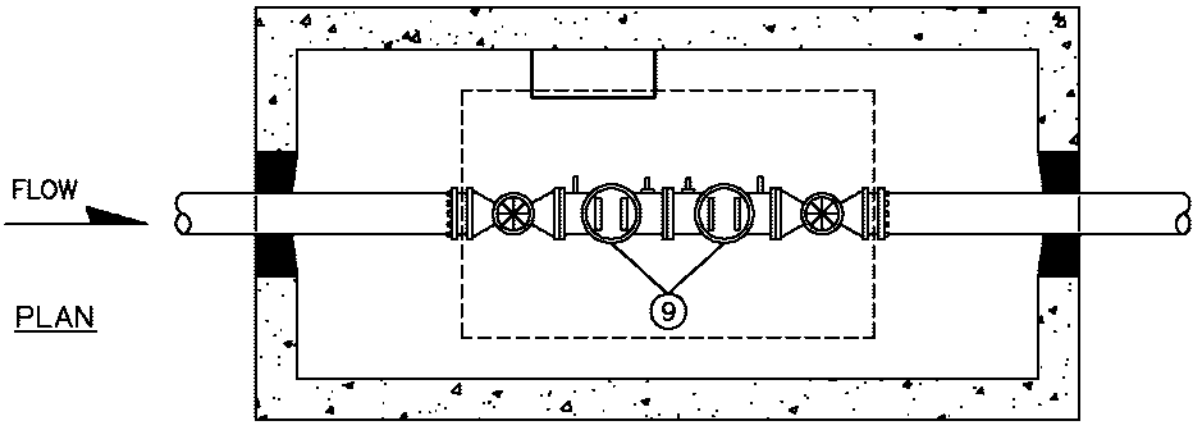

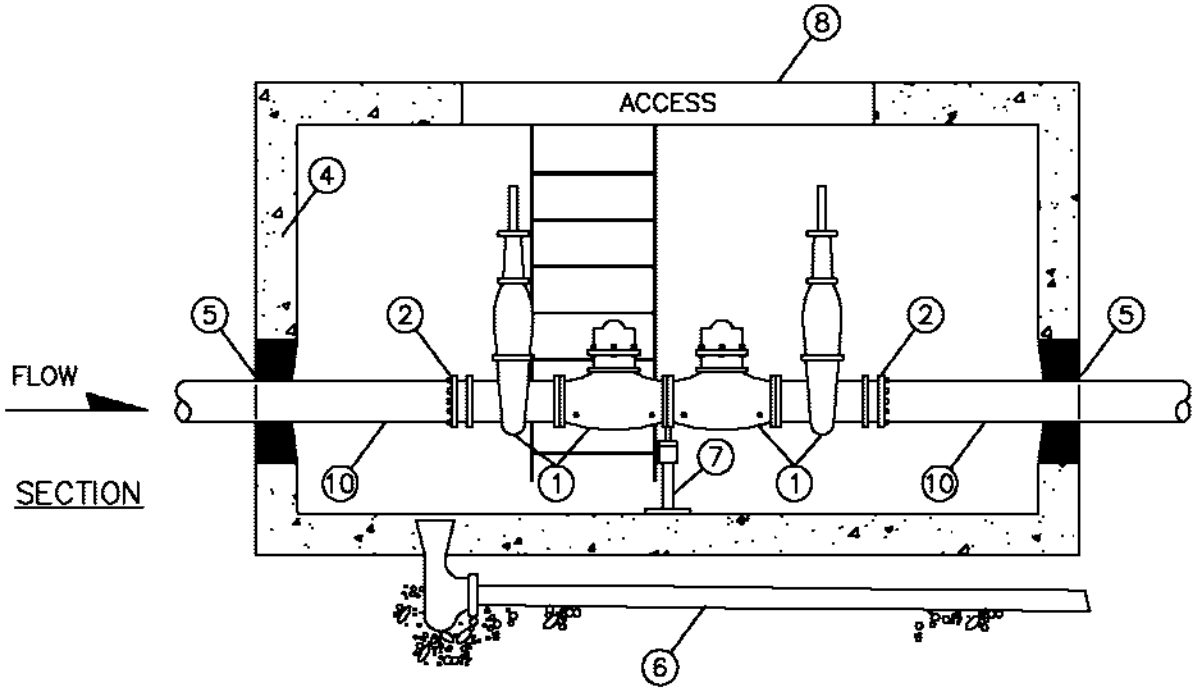

1. STATE APPROVED DOUBLE CHECK VALVE ASSEMBLY.
2. UNI–FLANGE WITH SETSCREWS.
3. ONE GALVANIZED STEEL LADDER TO BE SECURED TO THE VAULT.
4. CONCRETE VAULT (5'x9'x7'–2") WITH COVER.
5. WATER TIGHT GROUT. RESTRAIN INLET/OUTLET PIPE WITH WELDED FLANGE OR ANCHOR BLOCKS. INLET/OUTLET PIPE HAVE A 2" CLEARANCE BETWEEN VAULT AND PIPE. THIS CLEARANCE MUST BE FILLED WITH A URETHANE FOAM.
6. 4" DRAIN TO DAYLIGHT WHERE APPLICABLE.
7. ONE ADJUSTABLE PIPE STANCHION.
8. ACCESS TO BE CENTERED IN VAULT.
9. CL 52 DI, MJ, WITH RETAINER GLANDS.

NOTES:

1. ASSEMBLY TO BE MAINTAINED BY OWNER AND ANNUAL CERTIFICATION REQUIRED.
2. FIRELINE SHALL NOT BE PUT INTO SERVICE UNTIL THE BACKFLOW PREVENTION DEVICE IS APPROVED BY THE CITY OF KIRKLAND.

CITY OF KIRKLAND	
PLAN NO. CK–W.26	
CITY OF KIRKLAND WASHINGTON	DOUBLE CHECK VALVE ASSEMBLY

LAST REVISED: 1/25/07

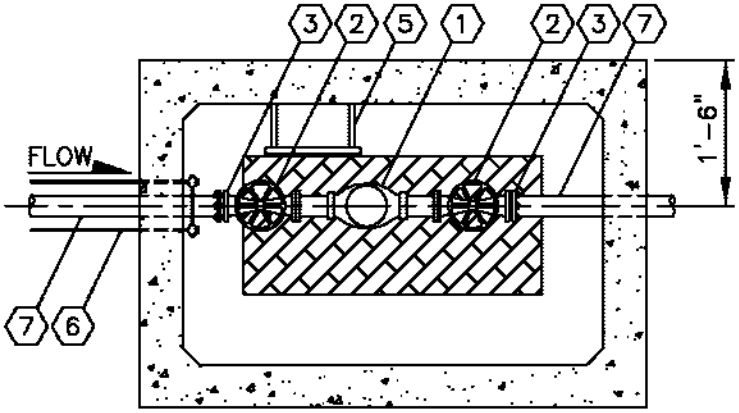

PLAN

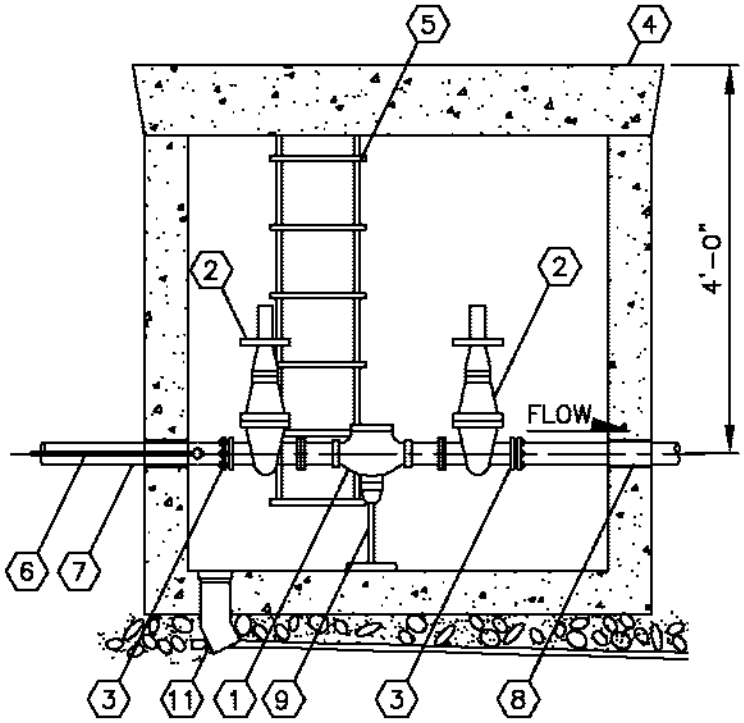

ELEVATION

MATERIALS

1. UL-FM LISTED SOFTSEATED CHECK VALVE ASSEMBLY
2. OS & Y GATE VALVES, FLANGE
3. UNI-FLANGE WITH SETSCREWS
4. CONCRETE VALVE (4'-8" X 7' X 7') WITH 3' X 3' DIAMOND PLATE COVER OR EQUAL; COVER TO READ "WATER")
5. 1 GALVANIZED STEEL LADDER TO BE SECURED TO VAULT
6. GALVANIZED SHACKLE TO MAIN 2 3/4" RODS, OR MJ RETAINER GLANDS
7. DUCTILE IRON PIPE (SIZED AS REQUIRED) CLASS 52
8. WATER TIGHT GROUT; RESTRAIN INLET/OUTLET PIPE WITH WELDED FLANGE OR ANCHOR BLOCKS. INLET/OUTLET PIPE MUST HAVE A CLEARANCE BETWEEN VAULT AND PIPE. THIS CLEARANCE MUST BE FILLED WITH A URETHANE FOAM. 1 ADJUSTABLE PIPE SUPPORT
9. GRAVEL FOUNDATION, AS REQUIRED.
10. 4" DRAIN TO DAYLIGHT WHERE APPLICABLE
11. TEE & GATE REQUIRED ON MAIN

NOTE:

1. DETECTOR CHECK VALVE ASSEMBLY REQUIRES ANNUAL CERTIFICATION.

CITY OF KIRKLAND	
PLAN NO. CK-W.27	
CITY OF KIRKLAND WASHINGTON	SOFT-SEATED CHECK VALVE ASSEMBLY

LAST REVISED: 11/30/99

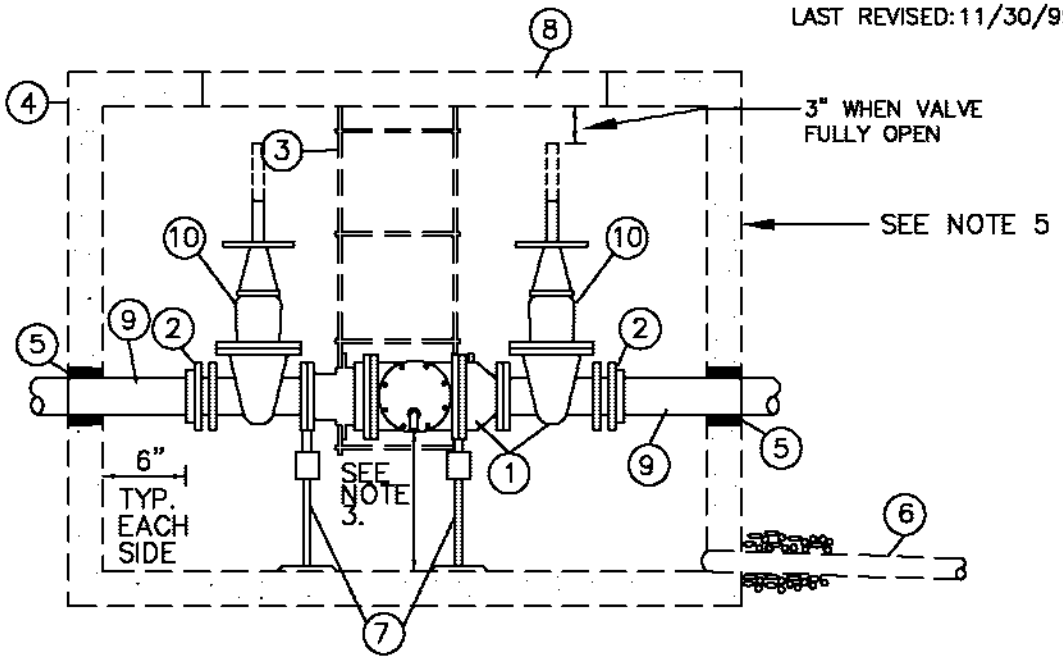

PROFILE

1. STATE APPROVED REDUCED PRESSURE PRINCIPLE BACKFLOW ASSEMBLY, COMPLETE WITH (2) RESILIENT SEATED O.S.&Y. GATE VALVES AND (4) RESILIENT SEATED TEST COCKS.
2. UNI-FLANGE WITH SETSCREWS.
3. ONE GALVANIZED STEEL LADDER TO BE SECURED TO VAULT.
4. CONCRETE VAULT WITH A MINIMUM OF 2, 3'x3' DIAMOND PLATE DOORS RATED FOR H-20 LOADING, MARKED "WATER". VAULT SHALL BE EQUAL TO UTILITY VAULT CO. MODEL LISTED IN TABLE BELOW.
5. WATER TIGHT GROUT. RESTRAIN INLET/OUTLET PIPE WITH WELDED FLANGE OR ANCHOR BLOCK.
6. DRAIN, SLOPE TO DAYLIGHT. TO BE LAID IN LINE ON GRADE AS SIZED BY CITY OF KIRKLAND.
7. TWO ADJUSTABLE PIPE STANCHIONS, BOLTED TO FLOOR.
8. ACCESS TO BE CENTERED OVER ASSEMBLY.
9. CL. 52 D.I., M.J. WITH RETAINER GLANDS.
10. EACH VALVE SHALL BE MARKED WITH MODEL NUMBER WITH DESIGNATION OF RESILIENT SEAT: SUCH AS "RS" OR "R", WHICH MUST BE CAST, MOLDED, OR AFFIXED ONTO THE BODY OR BONNET OF THE VALVE. ALL FERROUS BODIED VALVES SHALL BE COATED WITH A MINIMUM OF 4MLS. OF EPOXY OR EQUIVALENT POLYMERIZED COATING.

SIZE	MIN. VAULT SIZE (INSIDE) W	L	H	UTIL. VAULT CO. MODEL	UTIL. VAULT CO. COVER
3"	4'-3"	4'-8"	3'-11"	575-LA	64-2-332P
4"	4'-3"	5'-3"	4'-7"	577-LA	57TL-2-332P
6"	4'-4"	6'-6"	5'-5"	4484-LA	4484-TL2-332P
8"	5'-2"	7'-7"	7'-1"	687-LA	687-TL-2-332
10"	5'-4"	8'-8"	8'-0"	5106-2X	5106-TL3-332

NOTES:
1. DAYLIGHT DRAIN MUST BE ABLE TO BE LINE SIGHTED, INSTALLED ABOVE MAXIMUM FLOOD LEVEL, AND BE ABLE TO HANDLE THE VOLUME OF WATER THAT CAN BE DISCHARGED FROM THE RELIEF VALVE PORT.
2. WHEN THE REDUCED PRESSURE ASSEMBLY IS LOCATED INSIDE A BUILDING A SIZED DRAIN LINE SHALL BE PROVIDED FOR RELIEF PORT. THERE MUST BE AN APPROVED AIR GAP BETWEEN THE RELIEF PORT AND DRAIN.
3. ALLOW 12"+ NOMINAL DIAMETER OF ASSEMBLY CLEARANCE BELOW RELIEF PORT FOR REPAIR.
4. ASSEMBLY TO BE MAINTAINED BY OWNER AND ANNUAL CERTIFICATION REQUIRED.
5. REDUCED PRESSURE PRINCIPLE BACKFLOW ASSEMBLY WILL BE ALLOWED TO BE INSTALLED IN VAULTS ONLY IN CASES WHERE NO OTHER MEANS OF INSTALLATION IS AVAILABLE AND AS APPROVED BY THE CITY OF KIRKLAND.
6. WATERLINE SHALL NOT BE PUT INTO SERVICE UNTIL THE BACKFLOW PREVENTION ASSEMBLY IS APPROVED BY A CITY OF KIRKLAND WATER QUALITY INSPECTOR.
7. MINIMUM CLEARANCE BETWEEN ASSEMBLY AND WALL ON LADDER SIDE OF VAULT IS 24". MINIMUM CLEARANCE FROM OPPOSITE WALL IS 12". ALL CLEARANCES SHOWN ARE MINIMUM.
8. VAULTS SHALL NOT BE INSTALLED IN AREAS WITH VEHICULAR TRAFFIC.
9. TEE AND GATE VALVE REQUIRED ON MAIN.
10. IN CENTRAL BUSINESS DISTRICT, 3" THROUGH 6" ASSEMBLIES SHALL CONNECT TO WATER MAIN WITH 8" PIPE.

CITY OF KIRKLAND

PLAN NO. CK-W.28

CITY OF KIRKLAND WASHINGTON

REDUCED PRESSURE PRINCIPLE ASSEMBLY

LAST REVISED: 11/30/99

P.R.V. SHALL HAVE AN INTEGRAL BYPASS

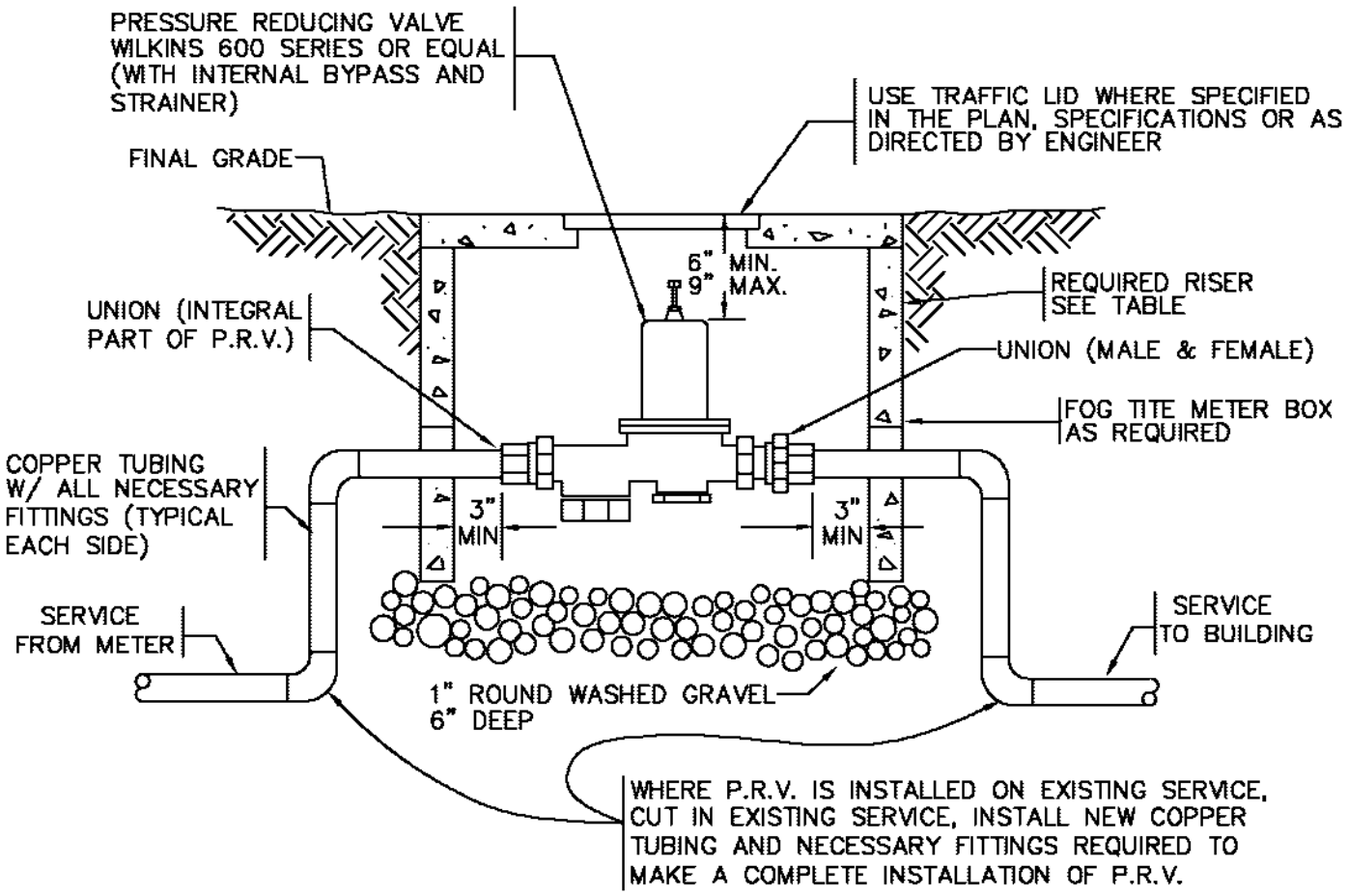

P.R.V. SIZE	FOG TITE METER BOX NO.	RISER REQUIRED
2"	2	12"
1 1/2"	2	12"
1 1/4"	1	6"
1"	1	6"
3/4"	1	4"
1/2"	1	4"

CITY OF KIRKLAND

PLAN NO. CK– W.29

CITY OF KIRKLAND WASHINGTON

INDIVIDUAL PRESSURE REDUCING VALVE ASSEMBLY RESIDENTIAL

LAST REVISED: 11/30/99

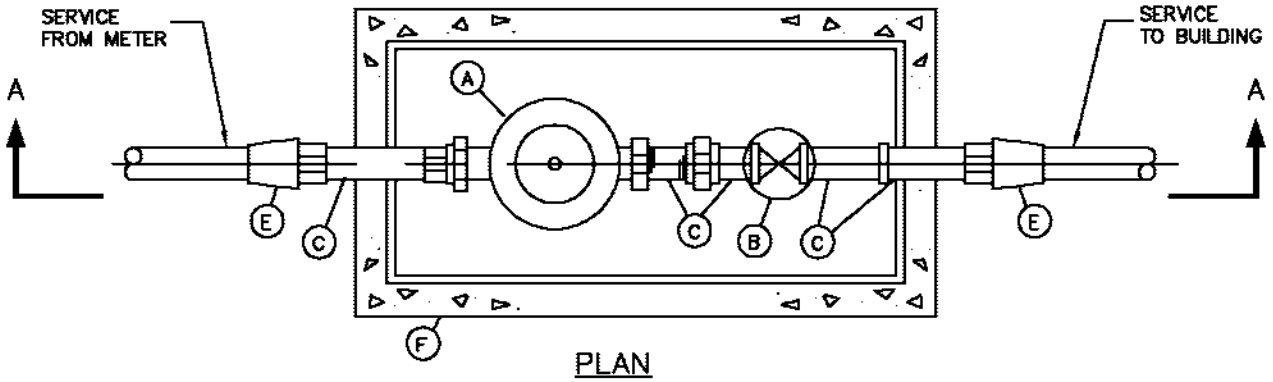

PLAN

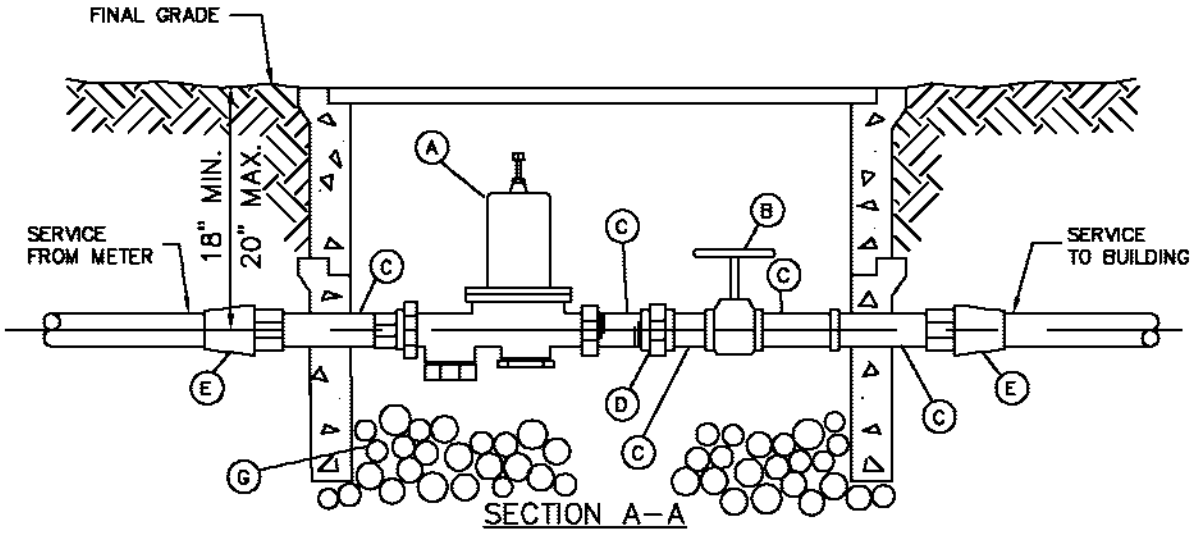

SECTION A–A

BILL OF MATERIALS

(A) PRESSURE REGULATOR – WILKINS 600 SERIES OR EQUAL (WITH INTERNAL BYPASS AND STRAINER)

(B) BRONZE GATE VALVE, 125–POUND, SOLID WEDGE OR DOUBLE DISC, WITH HANDWHEEL, OHIO BRASS, GRINNELL, OR EQUAL

(C) NIPPLE x 2 1/2" LONG, MALE.

(D) UNION, FEMALE.

(E) ADAPTER, FEMALE x COMPRESSION FITTING FOR COPPER.

(F) METER BOX FOR 1" INSTALLATION: FOGTITE B–10T IN NONTRAVELLED AREAS OR SIDEWALK. OLYMPIC FOUNDRY SM30 (18 3/4"x31"x16") IN AREAS WITH VEHICULAR TRAFFIC.
FOR 1 1/2" & 2" INSTALLATION:
17"x28" METER BOX W/TRAFFIC COVER AND 12" RISER, FOG TITE NO. 2T

(G) 1" ROUND WASHED GRAVEL, 8" MIN. DEPTH.

NOTES:

1. PRESSURE REGULATOR SIZE AS SPECIFIED OR SHOWN ON PLAN.
2. SIZES FOR ITEMS (B) THROUGH (E) SHALL CORRESPOND TO THE SPECIFIED SIZE OF THE PRESSURE REGULATOR.
3. ALL FITTINGS AND NIPPLES ARE BRASS WITH IRON PIPE THREADS.

CITY OF KIRKLAND	
PLAN NO. CK– W.30	
CITY OF KIRKLAND WASHINGTON	INDIVIDUAL PRESSURE REDUCING VALVE ASSEMBLY–MULTI–FAMILY OR COMMERCIAL

LAST REVISED: 11/30/99

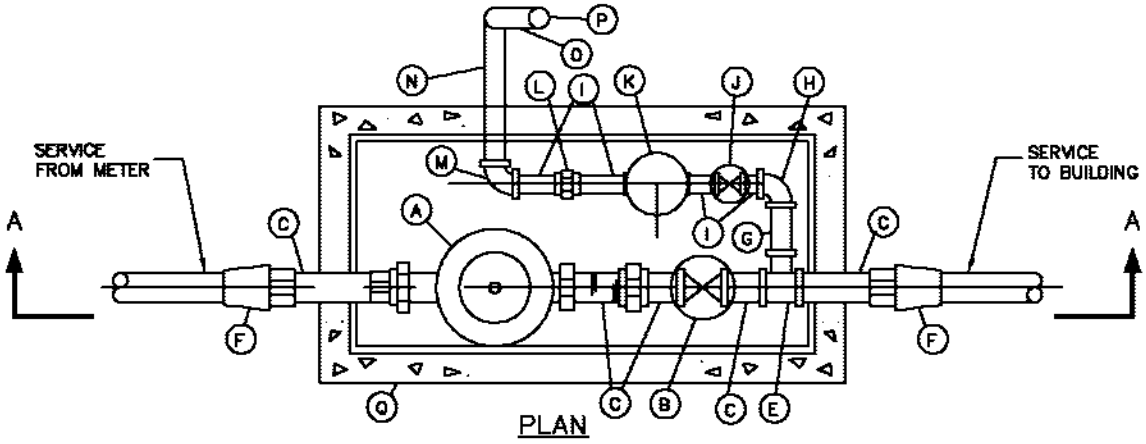

PLAN

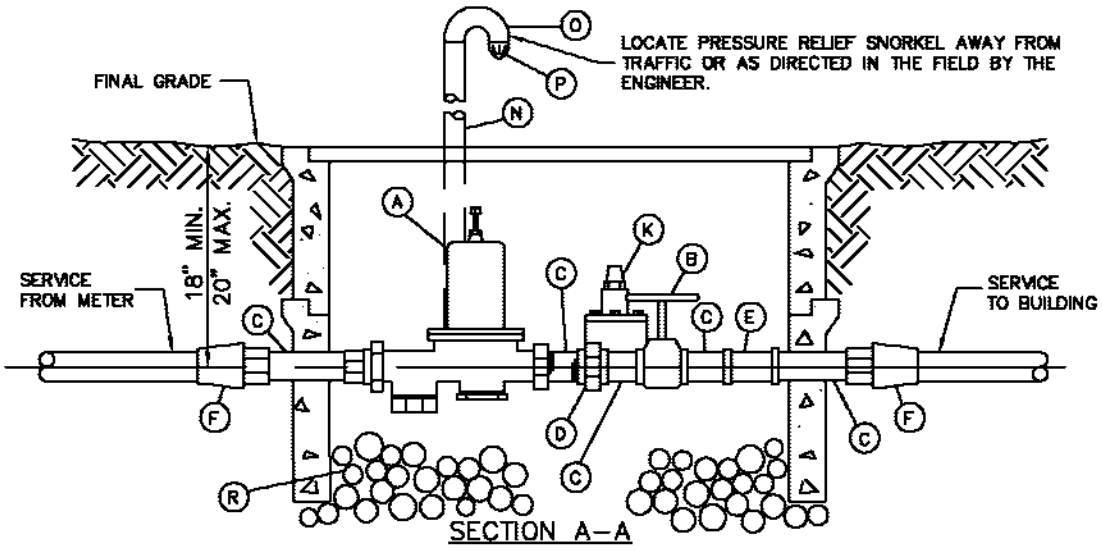

SECTION A–A

BILL OF MATERIALS

- (A) PRESSURE REGULATOR – WILKINS 600 SERIES OR EQUAL (WITH INTEGRAL BYPASS AND STRAINER)
- (B) BRONZE GATE VALVE, 125–POUND, SOLID WEDGE OR DOUBLE DISC, W/HANDWHEEL, OHIO BRASS, GRINNELL OR EQUAL.
- (C) NIPPLE x 2 1/2" LONG MALE.
- (D) UNION, FEMALE.
- (E) REDUCING TEE x 3/4" DIAMETER BRANCH, FEMALE.
- (F) ADAPTER, FEMALE x COMPRESSION FITTING FOR COPPER.
- (G) 3/4" NIPPLE x LENGTH TO FIT, MALE.
- (H) 3/4" x 90° ELBOW, FEMALE.
- (I) 3/4" x 2 1/2" NIPPLE, MALE.
- (J) 3/4" BRONZE GATE VALVE, SOLID WEDGE TYPE–MUELLER H–10914.
- (K) 3/4" PRESSURE RELIEF VALVE – CLAVAL 55 F
- (L) 3/4" UNION, FEMALE.
- (M) 2"x 3/4" 90° ELBOW, FEMALE.
- (N) 2" G.I. PIPE x LENGTH TO FIT AS DIRECTED, 10' MAX. INTEGRATED LENGTH. PAINTED WITH DAP DERUSTO – GLOSS BLUE #885
- (O) 2" OPEN PATTERN RETURN BEND, G.I.
- (P) 2" BEEHIVE STRAINER.
- (Q) 17"x 28" METER BOX W/ TRAFFIC COVER AND 12" RISER, FOG TITE NO. 2T. (SEE NOTE 4.)
- (R) 1" ROUND WASHED GRAVEL, 8" MIN. DEPTH.

NOTES:

1. PRESSURE REGULATOR SIZE AS SPECIFIED OR SHOWN ON PLAN.
2. SIZES FOR ITEMS (B) THROUGH (F) SHALL CORRESPOND TO THE SPECIFIED SIZE OF THE PRESSURE REGULATOR.
3. FITTINGS AND NIPPLES ARE BRASS WITH IRON PIPE THREADS, UNLESS OTHERWISE SHOWN.
4. FOR 2" INSTALLATION, LARGER METER BOX IS REQUIRED, MINIMUM INSIDE LENGTH OF BOX SHALL BE 32".

CITY OF KIRKLAND	
PLAN NO. CK– W.31	
CITY OF KIRKLAND WASHINGTON	INDIVIDUAL PRESSURE REDUCING VALVE ASSEMBLY WITH PRESSURE RELIEF–MULTI–FAMILY OR COMMERCIAL

LAST REVISED:01/01/08

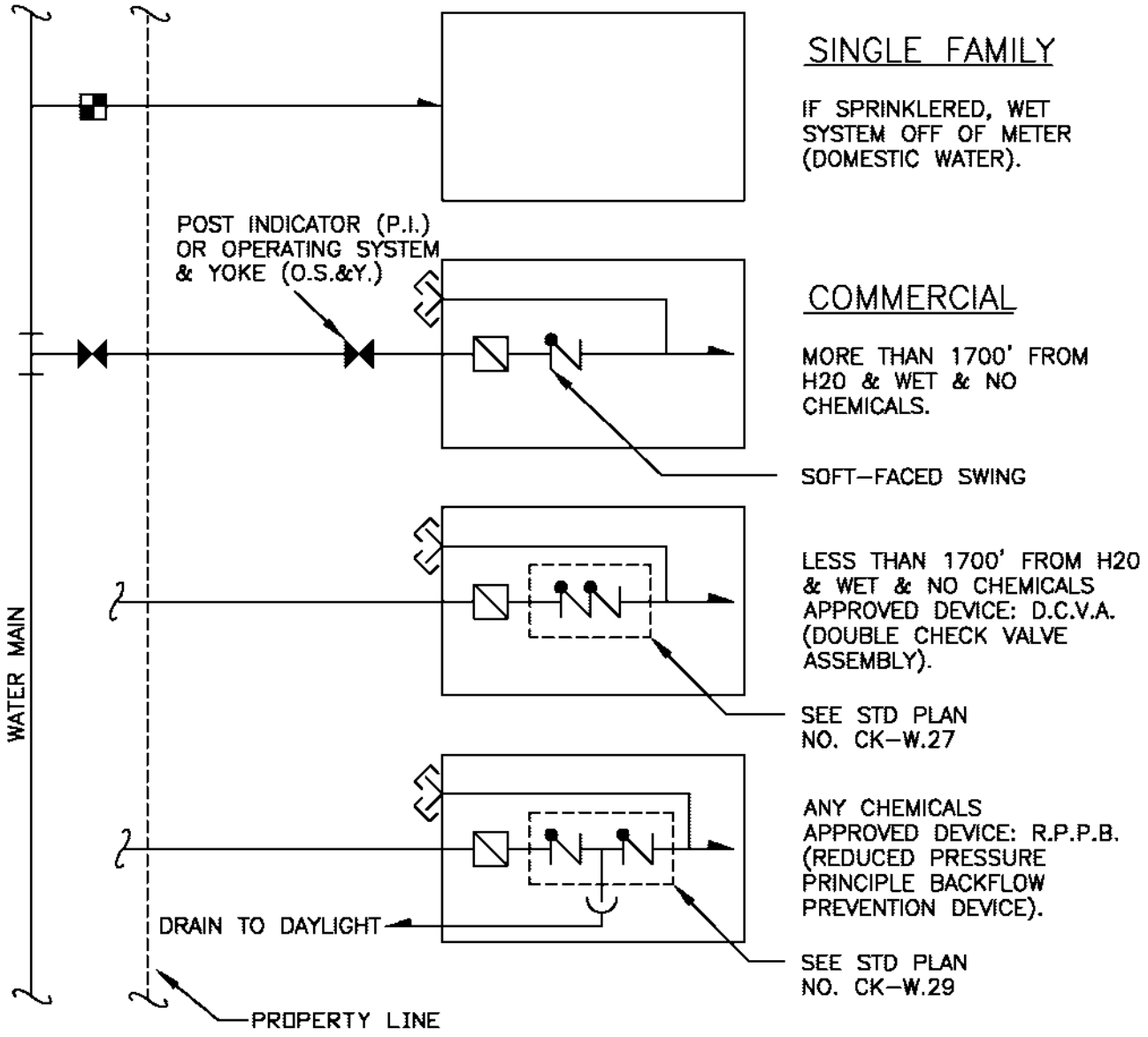

LEGEND

- SIAMESE CONNECTION
- METER
- ALARM
- CHECK VALVE
- GATE VALVE
- DRAIN
- TEE

NOTES

1. PREFERRED LOCATION INSIDE OF BUILDING (MECHANICAL ROOM).
2. IF VAULT IS OUTDOORS DRAIN TO DAYLIGHT.
3. ASSEMBLY MUST BE KEPT DRY.

CITY OF KIRKLAND	
PLAN NO. CK-W.32	
CITY OF KIRKLAND WASHINGTON	FIRE PROTECTION SPRINKLER ASSEMBLY

LAST REVISED: 1/30/09

SIDE VIEW
[CONNECTION TO WATERMAIN]

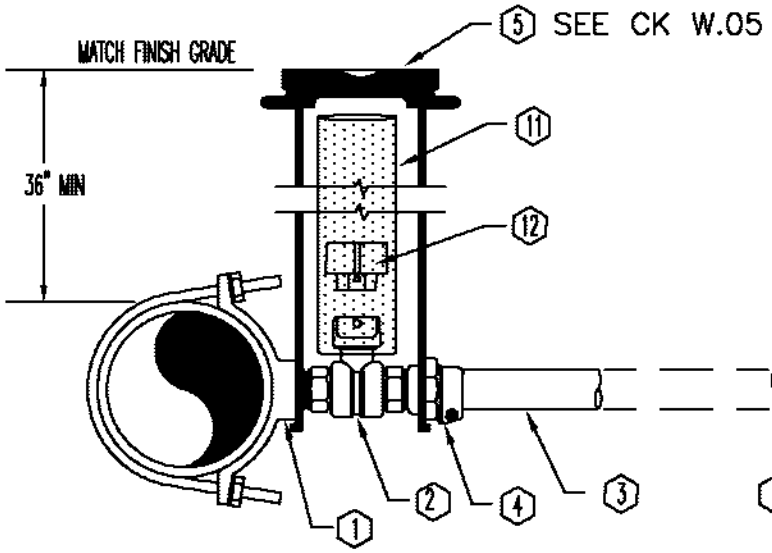

PLAN VIEW
[MANIFOLD]

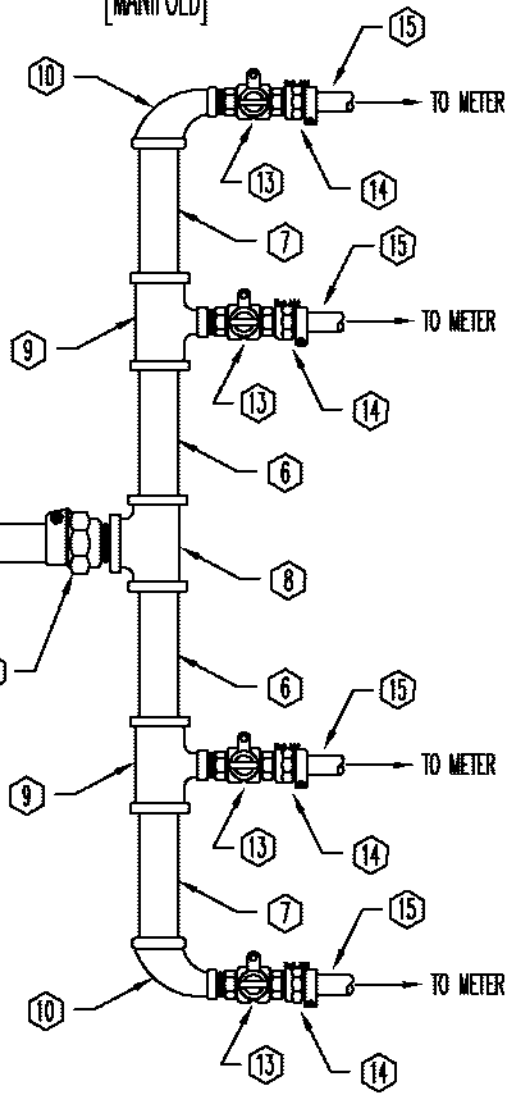

WATER SERVICE STANDARDS

DESCRIPTION	MAKER OR RATING	2"
1. Double Strap Saddle	Romac or Equal	202 IPT
2. 2" Ball Valve	Ford or equal	B11-777 w/Q167
3. Pipe - Soft Copper Tubing , Type K	ASTM B-88	
4. 2" Pack Joint		C84-77
5. Valve Box	Rich or Equal (940)	
6. Nipple Brass		2" x 12"
7. Nipple Brass		2" x 18"
8. Brass Tee		2"
9. Brass Tee		2" x 1"
10. Brass 90° Elbow		2" x 1"
11. 2" Sleeve	PVC	
12. 2" Operating Nut w/Cotter Pin		
13. 1" Ball Valve Curb Stop	Ford or Equal	
14. 1" Pack Joint		
15. 1" Poly Pipe		

NOTES

1. SERVICES TO BE 1" POLY W/1" ANGLE STOPS
2. SEE CK-W.12 FOR METER SET DETAILS
3. RUN COPPER TRACING WIRE FROM VALVE BOX TO ALL METER BOXES.
4. NOTCH VALVE BOX TO CRADDLE VALVE ASSEMBLY, SET ON BRICKS

FOR 4 TO 6 SERVICES ONLY, UPON APPROVAL BY PUBLIC WORKS.

CITY OF KIRKLAND

PLAN NO. CK-W.33

CITY OF KIRKLAND WASHINGTON

2" MANIFOLD FOR 4 TO 6 SERVICES

LAST REVISED:01/10/2011

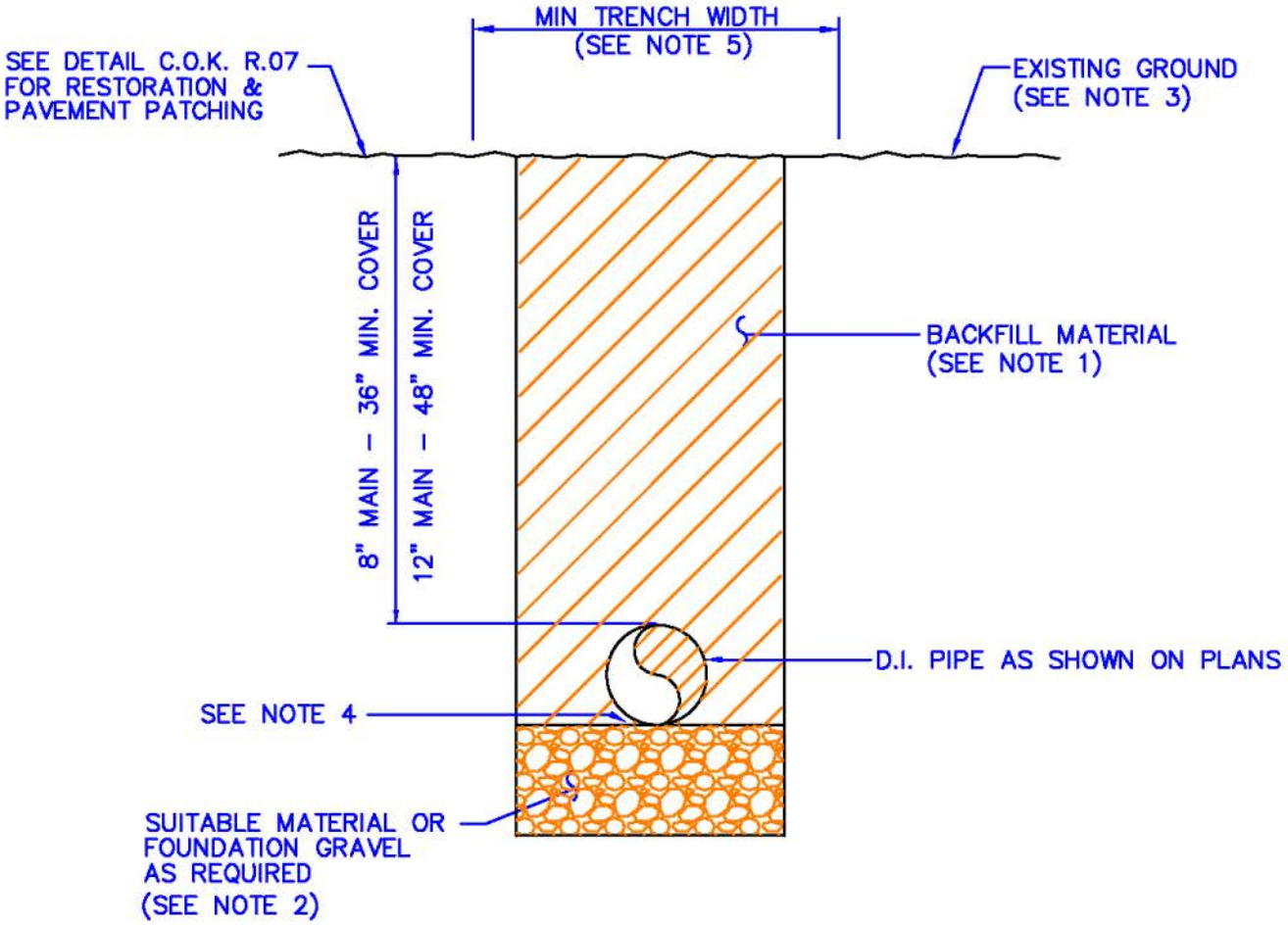

NOTES

1. ALL TRENCH BACKFILL MATERIAL SHALL CONSIST OF SUITABLE NATIVE EXCAVATED MATERIAL OR IMPORTED BACKFILL MATERIAL AS AUTHORIZED BY THE ENGINEER. ALL TRENCHES SHALL BE COMPACTED TO 95% MDD.
2. FOUNDATION GRAVEL SHALL BE REQUIRED TO PROVIDE A SOLID FOUNDATION FOR THE WATER MAIN IN THOSE AREAS OF THE TRENCH WHICH HAVE UNSUITABLE MATERIAL OR SOFT SPOTS.
3. GRAVEL SHOULDERS AND DRIVEWAYS SHALL BE RESTORED WITH A 3" MIN. THICKNESS LAYER OF 5/8" MINUS CRUSHED SURFACING.
4. PLACE AND COMPACT BACKFILL IN MAXIMUM 4" LIFT TO PIPE SPRINGLINE TO ASSURE NO VOIDS UNDER PIPE.
5. MINIMUM TRENCH WIDTH FOR PIPE DIAM. 15" AND UNDER IS I.D. + 30", FOR PIPE DIAM. 16" AND OVER IS (1.5 x I.D.) + 18", PER SECTION 2-09.4 OF THE STANDARD SPECIFICATIONS.

CITY OF KIRKLAND	
PLAN NO. CK-W.34	
CITY OF KIRKLAND WASHINGTON	WATER TRENCH DETAIL

LAST REVISED: 1/24/2013

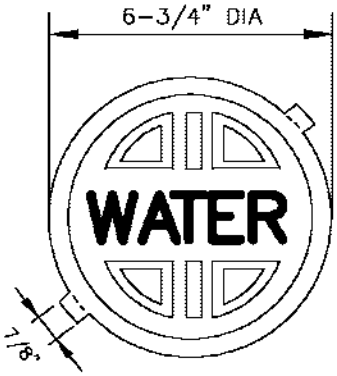

TOP VIEW

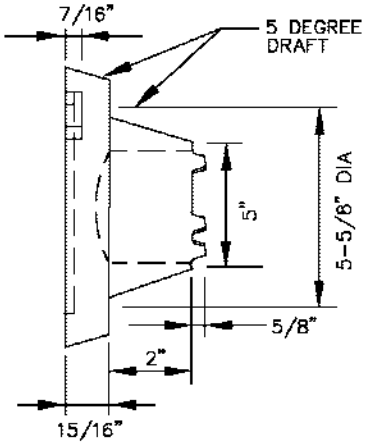

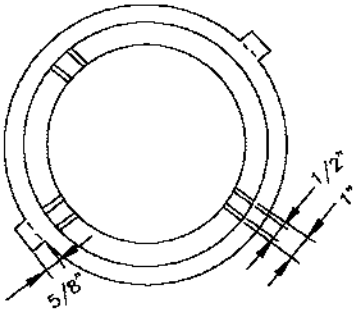

BOTTOM VIEW

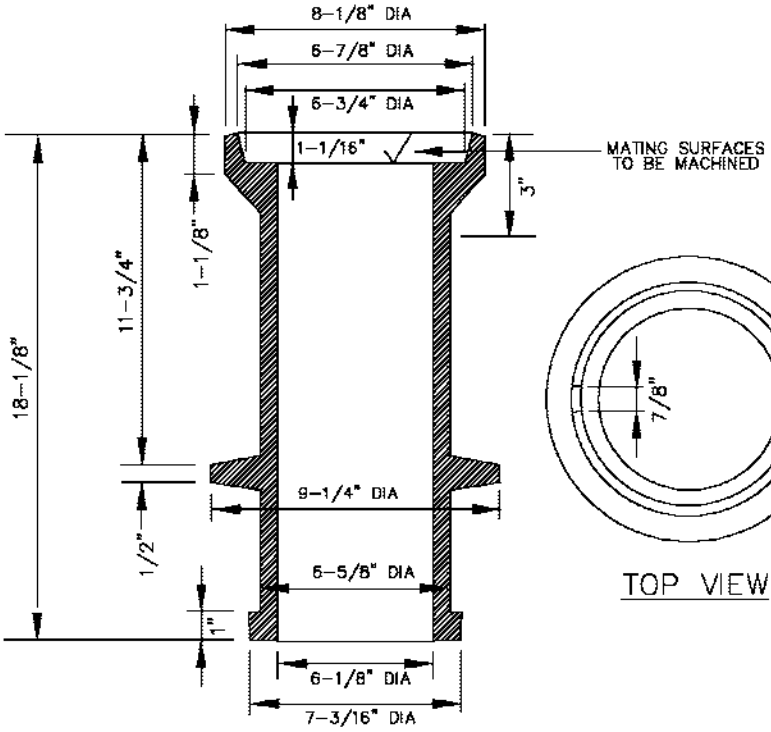

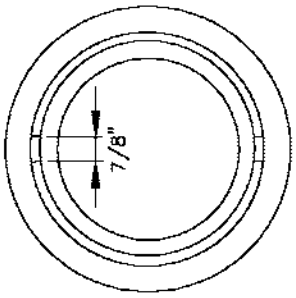

TOP VIEW

18" VALVE BOX TOP

NTS

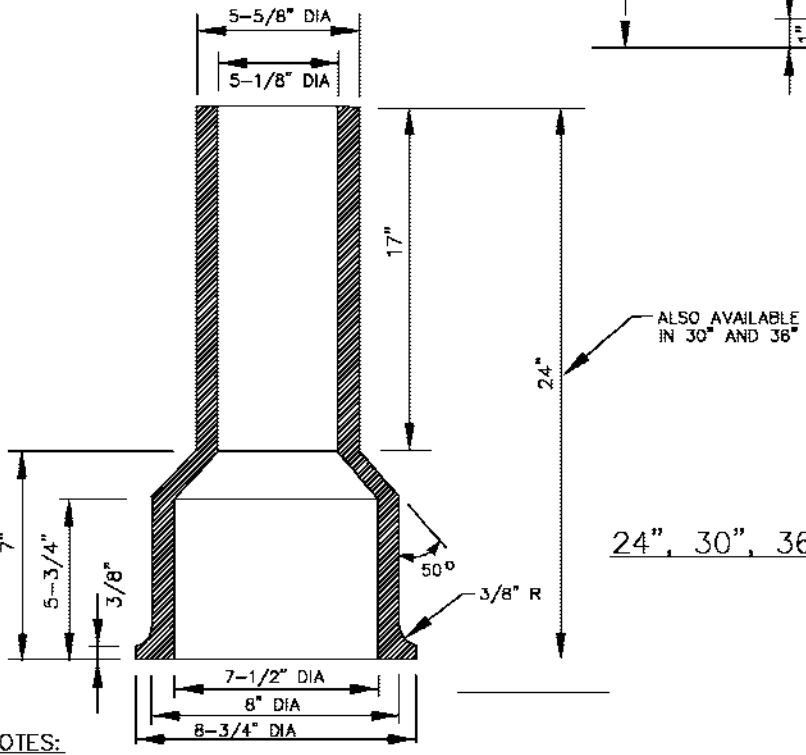

24", 30", 36" VALVE BOX BASE

NTS

NOTES:

1. IF NEEDED, USE MULTIPLE BASE SECTIONS STARTING WITH 36" BASE. "SOIL PIPE" WILL NOT BE ACCEPTED.
2. MATERIAL SHALL BE CAST IRON ASTM A48, CL30.
3. OLYMPIC FOUNDRY PRODUCT OR EQUIVALENT.
4. PAINT VALVE LID WITH KELLY MOORE 5880 DTM GLOSS ENAMEL-SAFETY BLUE OR EQUAL.

CITY OF KIRKLAND	
PLAN NO. CK-W.35	
CITY OF KIRKLAND WASHINGTON	WATER VALVE BOX

APPENDIX N

Water Rights Self-Assessment

Washington State Department of Health
Division of Environmental Health
Office of Drinking Water

Table 1

WATER SYSTEM PLAN
WATER RIGHTS SELF ASSESSMENT – EXISTING STATUS

PERMIT CERTIFICATE OR CLAIM #	NAME ON DOCUMENT	PRIORITY DATE (List oldest first)	SOURCE NAME/ NUMBER	ANY PORTION SUPPLEMENTAL? (If yes, explain in footnote)	EXISTING WATER RIGHTS		EXISTING CONSUMPTION		CURRENT WATER RIGHT STATUS (Excess/Deficiency)	
					Maximum Instantaneous Flow Rate (Qi)	Maximum Annual Volume (Qa)	Maximum Instantaneous Flow Rate (Qi)	Maximum Annual Volume (Qa)	Maximum Instantaneous Flow Rate (Qi)	Maximum Annual Volume (Qa)
Permits/ Certificates 1.										
2.										
3.										
4.										
Claims 1.										
2.										
3.										
4.										
TOTAL	**********	*********	*********	**********						

INTERTIE NAME/ IDENTIFIER	NAME OF PURVEYOR PROVIDING WATER	EXISTING LIMITS ON INTERTIE USE		EXISTING CONSUMPTION THROUGH INTERTIE		CURRENT INTERTIE SUPPLY STATUS (Excess/Deficiency)	
		Maximum Instantaneous Flow Rate (Qi)	Maximum Annual Volume (Qa)	Maximum Instantaneous Flow Rate (Qi)	Maximum Annual Volume (Qa)	Maximum Instantaneous Flow Rate (Qi)	Maximum Annual Volume (Qa)
1. CWA Interties	Cascade Water Alliance (CWA)	10,252 gpm	16,536 afy	5,943 gpm	9,586 afy	4,309 gpm	6,950 afy
2.							
3.							
4.							
TOTAL	**********	10,252 gpm	16,536 afy	5,943 gpm	9,586 afy	4,309 gpm	6,950 afy

PENDING WATER RIGHT APPLICATION (New/Change)	NAME ON APPLICATION	DATE SUBMITTED	ANY PORTION SUPPLEMENTAL? (If yes, explain in footnote)	PENDING WATER RIGHTS	
				Maximum Instantaneous Flow Rate (Qi) Requested	Maximum Annual Volume (Qa) Requested
1.					
2.					
3.					
4.					

If you need this publication in an alternate format, call (800) 525-0127. For TTY/TDD call (800) 833-6388.

DOH Form 331-371 (Updated 08/10)

To return form, please see reverse side.

Please return completed form to the Office of Drinking Water regional office checked below.

☐ Northwest Drinking Water
Department of Health
20435 72nd Ave S, Suite 200
Kent, WA 98032-2358
Phone: (253) 395-6750
Fax: (253) 395-6760

☐ Southwest Drinking Water
Department of Health
PO Box 47823
Olympia, WA 98504-7823
Phone: (360) 236-3030
Fax: (360) 664-8058

☐ Eastern Drinking Water
Department of Health
16201 E Indiana Ave, Suite 1500
Spokane Valley, WA 99216
Phone: (509) 329-2100
Fax: (509) 329-2104

Washington State Department of Health
Division of Environmental Health
Office of Drinking Water

Table 2

WATER SYSTEM PLAN
WATER RIGHTS SELF ASSESSMENT – 6 YEAR FORECAST

PERMIT CERTIFICATE OR CLAIM #	NAME ON DOCUMENT	PRIORITY DATE (List oldest first)	SOURCE NAME/ NUMBER	ANY PORTION SUPPLEMENTAL? (If yes, explain in footnote)	EXISTING WATER RIGHTS		FORECASTED WATER USE FROM SOURCES (6-year Demand)		FORECASTED WATER RIGHT STATUS (Excess/Deficiency)	
					Maximum Instantaneous Flow Rate (Qi)	Maximum Annual Volume (Qa)	Maximum Instantaneous Flow Rate (Qi)	Maximum Annual Volume (Qa)	Maximum Instantaneous Flow Rate (Qi)	Maximum Annual Volume (Qa)
Permits/ Certificates 1.										
2.										
3.										
4.										
Claims 1.										
2.										
3.										
4.										
TOTAL	**********	*********	*********	**********						

INTERTIE NAME/ IDENTIFIER	NAME OF PURVEYOR PROVIDING WATER	EXISTING LIMITS ON INTERTIE USE		FORECASTED CONSUMPTION THROUGH INTERTIE		FORECASTED INTERTIE SUPPLY STATUS (Excess/Deficiency)	
		Maximum Instantaneous Flow Rate (Qi)	Maximum Annual Volume (Qa)	Maximum Instantaneous Flow Rate (Qi)	Maximum Annual Volume (Qa)	Maximum Instantaneous Flow Rate (Qi)	Maximum Annual Volume (Qa)
1. CWA Interties	Cascade Water Alliance	12,232 gpm	19,730 afy	6,410 gpm	10,339 afy	5,822 gpm	9,391 afy
2.							
3.							
4.							
TOTAL	**********	12,232 gpm	19,730 afy	6,410 gpm	10,339 afy	5,822 gpm	9,391 afy

PENDING WATER RIGHT APPLICATION (New/Change)	NAME ON APPLICATION	DATE SUBMITTED	ANY PORTION SUPPLEMENTAL? (If yes, explain in footnote)	PENDING WATER RIGHTS	
				Maximum Instantaneous Flow Rate (Qi) Requested	Maximum Annual Volume (Qa) Requested
1.					
2.					
3.					
4.					

If you need this publication in an alternate format, call (800) 525-0127. For TTY/TDD call (800) 833-6388.

DOH Form 331-372 (Updated 08/10)

To return form, please see reverse side.

Please return completed form to the Office of Drinking Water regional office checked below.

☐ Northwest Drinking Water
Department of Health
20435 72nd Ave S, Suite 200
Kent, WA 98032-2358
Phone: (253) 395-6750
Fax: (253) 395-6760

☐ Southwest Drinking Water
Department of Health
PO Box 47823
Olympia, WA 98504-7823
Phone (360) 236-3030
Fax: (360) 664-8058

☐ Eastern Drinking Water
Department of Health
16201 E Indiana Ave, Suite 1500
Spokane Valley, WA 99216
Phone: (509) 329-2100
Fax: (509) 329-2104

Washington State Department of Health
Division of Environmental Health
Office of Drinking Water

Table 2

WATER SYSTEM PLAN
WATER RIGHTS SELF ASSESSMENT – 10 YEAR FORECAST

PERMIT CERTIFICATE OR CLAIM #	NAME ON DOCUMENT	PRIORITY DATE (List oldest first)	SOURCE NAME/ NUMBER	ANY PORTION SUPPLEMENTAL? (If yes, explain in footnote)	EXISTING WATER RIGHTS		FORECASTED WATER USE FROM SOURCES (6-year Demand)		FORECASTED WATER RIGHT STATUS (Excess/Deficiency)	
					Maximum Instantaneous Flow Rate (Qi)	Maximum Annual Volume (Qa)	Maximum Instantaneous Flow Rate (Qi)	Maximum Annual Volume (Qa)	Maximum Instantaneous Flow Rate (Qi)	Maximum Annual Volume (Qa)
Permits/ Certificates 1.										
2.										
3.										
4.										
Claims 1.										
2.										
3.										
4.										
TOTAL	**********	*********	*********	**********						

INTERTIE NAME/ IDENTIFIER	NAME OF PURVEYOR PROVIDING WATER	EXISTING LIMITS ON INTERTIE USE		FORECASTED CONSUMPTION THROUGH INTERTIE		FORECASTED INTERTIE SUPPLY STATUS (Excess/Deficiency)	
		Maximum Instantaneous Flow Rate (Qi)	Maximum Annual Volume (Qa)	Maximum Instantaneous Flow Rate (Qi)	Maximum Annual Volume (Qa)	Maximum Instantaneous Flow Rate (Qi)	Maximum Annual Volume (Qa)
1. CWA Interties	Cascade Water Alliance	12,232 gpm	19,730 afy	6,685 gpm	10,782 afy	5,547 gpm	8,948 afy
2.							
3.							
4.							
TOTAL	**********	12,232 gpm	19,730 afy	6,685 gpm	10,782 afy	5,547 gpm	8,948 afy

PENDING WATER RIGHT APPLICATION (New/Change)	NAME ON APPLICATION	DATE SUBMITTED	ANY PORTION SUPPLEMENTAL? (If yes, explain in footnote)	PENDING WATER RIGHTS	
				Maximum Instantaneous Flow Rate (Qi) Requested	Maximum Annual Volume (Qa) Requested
1.					
2.					
3.					
4.					

If you need this publication in an alternate format, call (800) 525-0127. For TTY/TDD call (800) 833-6388.

DOH Form 331-372 (Updated 08/10)

To return form, please see reverse side.

Please return completed form to the Office of Drinking Water regional office checked below.

☐ Northwest Drinking Water
Department of Health
20435 72nd Ave S, Suite 200
Kent, WA 98032-2358
Phone: (253) 395-6750
Fax: (253) 395-6760

☐ Southwest Drinking Water
Department of Health
PO Box 47823
Olympia, WA 98504-7823
Phone (360) 236-3030
Fax: (360) 664-8058

☐ Eastern Drinking Water
Department of Health
16201 E Indiana Ave, Suite 1500
Spokane Valley, WA 99216
Phone: (509) 329-2100
Fax: (509) 329-2104

Washington State Department of Health
Division of Environmental Health
Office of Drinking Water

Table 3

WATER SYSTEM PLAN
WATER RIGHTS SELF ASSESSMENT – 20 YEAR FORECAST

PERMIT CERTIFICATE OR CLAIM #	NAME ON DOCUMENT	PRIORITY DATE (List oldest first)	SOURCE NAME/ NUMBER	ANY PORTION SUPPLEMENTAL? (If yes, explain in footnote)	EXISTING WATER RIGHTS		FORECASTED WATER USE FROM SOURCES (20-year Demand)		FORECASTED WATER RIGHT STATUS (Excess/Deficiency)	
					Maximum Instantaneous Flow Rate (Qi)	Maximum Annual Volume (Qa)	Maximum Instantaneous Flow Rate (Qi)	Maximum Annual Volume (Qa)	Maximum Instantaneous Flow Rate (Qi)	Maximum Annual Volume (Qa)
Permits/ Certificates 1.										
2.										
3.										
4.										
Claims 1.										
2.										
3.										
4.										
TOTAL	**********	*********	*********	**********						

INTERTIE NAME/ IDENTIFIER	NAME OF PURVEYOR PROVIDING WATER	EXISTING LIMITS ON INTERTIE USE		FORECASTED CONSUMPTION THROUGH INTERTIE		FORECASTED INTERTIE SUPPLY STATUS (Excess/Deficiency)	
		Maximum Instantaneous Flow Rate (Qi)	Maximum Annual Volume (Qa)	Maximum Instantaneous Flow Rate (Qi)	Maximum Annual Volume (Qa)	Maximum Instantaneous Flow Rate (Qi)	Maximum Annual Volume (Qa)
1. CWA Interties	Cascade Water Alliance (CWA)	12,804 gpm	20,652 afy	7,350 gpm	11,856 afy	5,454 gpm	8,796 afy
2.							
3.							
4.							
TOTAL	**********	12,804 gpm	20,652 afy	7,350 gpm	11,856 afy	5,454 gpm	8,796 afy

PENDING WATER RIGHT APPLICATION (New/Change)	NAME ON APPLICATION	DATE SUBMITTED	ANY PORTION SUPPLEMENTAL? (If yes, explain in footnote)	PENDING WATER RIGHTS	
				Maximum Instantaneous Flow Rate (Qi) Requested	Maximum Annual Volume (Qa) Requested
1.					
2.					
3.					
4.					

If you need this publication in an alternate format, call (800) 525-0127. For TTY/TDD call (800) 833-6388.

DOH Form 331-373 (Updated 08/10)

To return form, please see reverse side.

Please return completed form to the Office of Drinking Water regional office checked below.

☐ Northwest Drinking Water
Department of Health
20435 72nd Ave S, Suite 200
Kent, WA 98032-2358
Phone: (253) 395-6750
Fax: (253) 395-6760

☐ Southwest Drinking Water
Department of Health
PO Box 47823
Olympia, WA 98504-7823
Phone (360) 236-3030
Fax: (360) 664-8058

☐ Eastern Drinking Water
Department of Health
16201 E Indiana Ave, Suite 1500
Spokane Valley, WA 99216
Phone: (509) 329-2100
Fax: (509) 329-2104

APPENDIX O

Coliform Monitoring Plans

Seattle Public Utilities

Regional Coliform Monitoring Program Plan

Wholesale and Direct Service Areas Reduced Monitoring

Seattle Public Utilities
Water Quality Laboratory
800 S. Stacy Street
Seattle, WA 98134

December 2005

Table of Contents

Table of Contents 2

Background 3

- Regulatory Background and Requirements 3
- Purpose and Scope of the Plan 3
- Overview of the Regional Water System 4
  - Sources of Supply 4
  - Treatment 5
  - Transmission 5

Monitoring Program 5

- Criteria for Participation 5
- Rationale for Reduced Monitoring 6
- Sampling Requirements 7
- Sampling Locations 7
- Sampling Schedule and Routes 7
- Sample Stands and Sampling Procedures 8
- Sample Analysis 9
- Delineation of Responsibilities: SPU and Wholesale Customers 9
  - Sampling and Analysis 9
  - Water System Operation and Maintenance 9
  - Reporting 9
- Written Agreements 9
- Compliance Determinations 10

Program Plan Updates 10

Appendices

Appendix A – Residential and Non-Residential Population Served and Number of Samples for Regional Participants

Appendix B – Basic Monthly Coliform Sampling Schedule

Appendix C – Sampling Routes

Appendix D – Recommended Instructions for Sample Collection

Appendix E – Sample Stand Construction Drawing

Appendix F – Sample Stand Maintenance and Disinfection

Appendix G – Continuation Request Form

Background

Regulatory Background and Requirements

In 1974 the US Congress enacted the Safe Drinking Water Act (SDWA), which established national drinking water standards. The SDWA set maximum levels for particular contaminants and established monitoring requirements. In 1986 Congress expanded the SDWA to include the regulation of coliforms, resulting in promulgation of the Total Coliform Rule (TCR) in 1989. State regulations were then revised to incorporate the TCR (WAC 246-290, Part 4).

Coliform testing is performed on a monthly basis with the required number of samples based on the population served. State regulations allow for reduced coliform monitoring for regional programs, where utilities purchase water from a wholesale water supplier. The wholesale water supplier must have a Department of Health (DOH) approved regional monitoring program. The Seattle regional supply system has operated under a regional, reduced monitoring program since the 1970s, before the issuance of the TCR. Each utility is also required to have its own coliform monitoring plan that covers its direct service area.

Under the coliform regulations, all samples are tested for total coliform. If total coliform is present, the sample is also tested for either fecal coliform or *E. Coli* and repeat samples are collected. In addition, chlorine residual must be tested and reported with each coliform sample.

A water quality violation occurs under any of the three following conditions: 1) more than 5 percent of samples in a month are positive for total coliform (non-acute MCL violation); 2) a total coliform positive sample that also tests positive for fecal coliforms/*E. Coli* is followed by a positive coliform repeat sample (acute MCL violation); or 3) a coliform positive sample is followed by a coliform and fecal coliform/*E. Coli* positive repeat sample (acute MCL violation). For water systems that collect less than 40 samples per month, the 5 percent limit on total coliform means that more than one positive coliform sample results in a violation.

Purpose and Scope of the Plan

The purpose of this plan is to document and explain the program for regional coliform monitoring of the Seattle regional water supply system. The program is intended to meet the state requirement for a regional coliform monitoring program that allows for reduced coliform monitoring. The plan:

- Explains the criteria for participation and the rationale for reduced monitoring;
- Presents the current utility population estimates and sampling requirements;
- Provides an overview of sampling locations, sample collection, and sample analysis;
- Lists the current responsibilities of wholesale supplier and participating utilities; and
- Covers agreements for participation in the program.

Overview of the Regional Water System

Seattle Public Utilities provides water to over 25 utilities in the region, serving a combined population of approximately 1.3 million people. Some of the utilities rely solely on SPU for water supply, while others also have their own water sources. A general description of the regional supply and transmission facilities is presented below. For a more detailed description of the SPU and receiving systems, please refer to the individual water system plans.

Sources of Supply

SPU operates two main sources of supply: the Cedar River and the South Fork Tolt River. The transmission systems from each supply are connected, with the Tolt feeding from the north and the Cedar feeding from the south. Normally each of the supplies travels as far as Bellevue, where some blending can occur; however, depending on operations, the Tolt and Cedar can reach farther to the south and north, respectively.

In addition, the Riverton Heights Wellfield and Boulevard Park Well provide water during some peak seasons and serve as a backup supply to the river sources. When in use, these well supplies are blended with Cedar supply water. The blended water generally travels into the southwestern part of the SPU service area and the water systems south of Seattle. The individual sources are listed in Table 1 below.

Table 1. SPU Sources of Supply

DOH Source No.	Source Name	Source Category
SO1	Cedar River	Surface
SO2	Tolt River	Surface
SO3	Riverton Heights #1	Well in a well field
SO4	Boulevard	Well
SO5	Riverton Heights #2	Well in a well field
SO6	Riverton Heights WF	Wellfield

The Cedar River supply is an unfiltered surface water that provides approximately 70 percent of the drinking water for the regional system. The South Fork Tolt River supply is a filtered surface water that provides the remaining 30 percent of the drinking water. The Riverton Heights and Boulevard Wells are considered a seasonal supply and can supply up to 10 mgd.

The Cedar River begins within a protected watershed on the west side of the Cascade Mountains and eventually drains into the south end of Lake Washington. The watershed area totals about 79,700 acres of which 99.7 percent is owned by SPU. The Cedar River water supply system also consists of Chester Morse Lake, the Landsburg Facilities, the Cedar Supply Pipelines, Lake Youngs, the Cedar Water Treatment Facility, the Lake Youngs Tunnel and Pump Station, and Control Works.

The South Fork Tolt River watershed has a drainage area of approximately 12,100 acres in northeastern King County. The south fork of the river eventually flows into the Snoqualmie River. The watershed is controlled by SPU, which owns 69 percent of the area. The remainder is owned by the US Forest Service. The Tolt River water supply system consists of the Tolt Reservoir, the Tolt Penstock, the Regulating Basin, the Tolt Treatment Facilities, and the Tolt Pipelines.

Treatment

The Cedar River supply is diverted at Landsburg, where chlorine and fluoride are currently added, and discharged into Lake Youngs. Facilities installed in 2004 pump Lake Youngs water and disinfect it with ozone, ultraviolet light, and chlorine. Lime is then added for corrosion control. With the new facilities, the Cedar supply is operated as an unfiltered surface water source under a Limited Alternative to Filtration. (Prior to installation of the new facilities, treatment consisted of primary chlorination and fluoridation at Landsburg and secondary chlorination and lime addition at the Lake Youngs outlet.)

The Tolt River supply is treated with ozonation, direct filtration, chlorination, fluoridation, and lime and carbon dioxide addition. (Prior to 2001, the Tolt was operated as an unfiltered surface water supply.)

The Riverton Heights and Boulevard Park wells are treated with hypochlorite for disinfection, fluoride, and sodium hydroxide for corrosion control.

Tolt water that passes through Lake Forest Reservoir, located north of Lake Washington, is rechlorinated prior to reaching SPU and three wholesale customers (Northshore, Shoreline, and Olympic View).

Transmission

The Cedar supply is carried through Cedar River Pipelines #1, 2, 3, & 4 and the West Seattle Pipeline to water utilities in the area generally south of Seattle. The Cedar Eastside Supply Line runs on the east side of Lake Washington to Bellevue, where it connects with the Tolt Eastside Supply Line.

Tolt Pipeline #1 runs from the Tolt Treatment Facilities to Lake Forest Reservoir in the City of Lake Forest Park. Tolt Pipeline #2 branches off Pipeline #1 in Duvall and runs through Redmond to the Tolt Eastside Supply Line. Tolt Pipelines #1 and 2 are also connected by the Tolt Tie Line east of Redmond and Woodinville. The Tolt Eastside Supply Line starts at the north in Woodinville, running from Pipeline #1 to the Eastide Reservoir, with intermediate connections to Pipeline #2 and the Cedar Eastside Supply Line.

Monitoring Program

Criteria for Participation

Only public water systems that receive their entire water supply from SPU sources qualify for reduced coliform monitoring under the regional monitoring program. Water systems that use their own or other utilities' sources of supply are not eligible for the reduction. Participants may have emergency interties that connect them with other sources than the SPU supply.

There are 19 utilities that participate in the regional monitoring program as listed in Table 1.

Rationale for Reduced Monitoring

WAC 246-290-300 allows for a reduction in monitoring requirements for regional programs. The reduction in monitoring under this program is 30 percent, except for water systems that predominantly serve a transient population, for which the reduction is 50 percent. These percent reductions are based on approval by DOH of this regional plan. These reductions are justified by a number of advantages provided by the regional water system and the program of regional monitoring as explained below.

- All water systems in the regional program are served by common sources of water and a common transmission system that are under the control of a single utility. This means that very similar water is reaching each of the utilities. A problem in the source or transmission systems would likely affect more than one system and have a similar effect in these systems.
- All routine coliform sampling, analyses, and reporting is coordinated by a single laboratory, the SPU Water Quality Laboratory. This centralized effort helps eliminate variability in sampling and analytical technique.
- Evaluation of coliform and chlorine residual results for all regional systems is performed by a team of staff at SPU as well as by the individual water systems. This allows for a regional perspective on the sampling results along with the knowledge of current source and treatment conditions. This centralized review of source, treatment, and regional distribution water quality can be invaluable in understanding regional water quality and tracking down the source of a water quality problem.
- Monthly water quality and supply meetings are held for the regional water systems. During these meetings, source and regional water quality results are reviewed, major operational issues are discussed, and utilities share information on water quality issues, efforts, and solutions from their individual systems. Less formal discussions also occur between SPU and participating water systems about water quality results and water system operations.
- There is no evidence of any long-term or ongoing coliform problems in any of the participating water systems.
- Regional reduced monitoring is much more conservative (i.e., requires more samples) than monitoring for a single large water system. Because of the common facilities and coordination that occurs, the regional water systems are comparable to a single, larger system. As a whole, the regional system serves a population of approximately 1,425,233. This number is greater than the population range in WAC 246-290-300 Table 2; however, the table in the EPA Total Coliform Rule, upon which the state regulation is based, indicates a requirement of 330 samples per month for that population. The minimum number of monthly samples collected under regional monitoring is 612 (calculated as 70 percent of required Table 2 samples based on residential and non-residential for each participating system); this is 185 percent of the EPA requirement for a single system. The maximum number of samples required by the Total Coliform Rule for any single system is 480.

Sampling Requirements

Coliform monitoring under this regional program is conducted as follows:

- Monitoring is performed on a monthly basis.
- The number of samples required is determined for each water system using that water system's population served.
- The number of samples required is 70 percent (i.e., 30 percent reduction) of the value in WAC 246-290-300 Table 2 for the corresponding permanent population of the individual system. For utilities with predominantly transient populations (e.g., SeaTac Airport), 50 percent of the value in the WAC is used. Fractional numbers are rounded to the next higher whole number.
- The minimum number of samples for any participating water system is 5.

The current population estimates and required number of coliform samples are shown in Table 1 for each participant in the regional monitoring program. With this regional plan revision, DOH has indicated that non-residential population has to be included where appropriate. Therefore, the populations in Table 1 include both residents and non-residents. Non-residents are included for Bellevue, Bothell, Kirkland, Tukwila, and SPU. DOH may require other utilities to start including non-residential populations in the future. Under regional monitoring, non-residential populations are estimated only for people who reside outside of the wholesale service area. This avoids counting populations as residents in one regional utility and non-residents in another. A more detailed tabulation of non-residential populations in shown in Appendix A.

Sampling Locations

The routine sampling locations for the regional utilities are shown in Figure 1. A listing of physical addresses is provided in Appendix B. (For SPU, see the Direct Service Area Plan.) Routine and repeat sampling locations are selected by each utility individually as indicated in the direct service area coliform monitoring plans.

Sampling Schedule and Routes

SPU schedules and collects routine coliform samples for the regional program. Sampling frequency depends on the number of samples and sample stands for a given water system. A basic monthly sampling schedule is presented in Appendix B. (Note that the schedule does not reflect the number of samples shown in Table 1 for Bothell, Kirkland, and Tukwila due to the addition of non-residential population. Upon approval of this plan, the schedules and routes will be revised.) The sampling schedule does vary each month depending on which day of the week that the first of the month falls and the number of days in the month.

A series of set routes are followed for sample collection covering both the SPU direct and wholesale customer service areas. A detailed listing of routes is presented in Appendix C; note that the routes include utilities that both do and do not qualify for reduced monitoring under the regional program. The routes also include non-compliance sample stations. The same routes are

followed the first three weeks of the month. Altered routes are followed in the fourth and fifth weeks.

Table 1
Population Served and Number of Samples for Regional Participants

PWS ID Number	Water System Name	Total Population	Standard Number of Samples Required[1]	Regional Reduced Monitoring[2]
05575B	Bellevue	173,021	120	84
07900L	Bothell	26,812	30	21
418007	Cedar River	23,353	25	18
41750C	Coal Creek	9,000	10	7
207508	Duvall	7,006	8	6
42250T	Kirkland	42,224	50	35
536405	Mercer Island	21,710	25	18
408005	Northshore	84,040	90	63
03182D	SeaTac Int'l Airport	64,483	70	35
39600E	Shoreline	30,378	30	21
401008	Soos Creek	56,838	60	42
77050Y	Seattle Public Utilities	786,000	270	189
89500F	Tukwila	24,875	25	18
41600Y	Woodinville	40,000	40	28
389502	KCWD #20	38,813	40	28
39700K	KCWD#45	3,831	4	5
39800P	KCWD#49	12,409	10	7
419850	KCWD#119	3,516	4	5
41998T	KCWD#125	11,795	10	7
Totals		**1,425,233**	**878**	**612**

[1] Per WAC 246-290-300 Table 2.
[2] Number of samples reduced by 30% for regional reduced monitoring, except Sea Tac, which is reduced by 50% due to predominantly transient population. Minimum of 5 monthly coliform samples for all participating utilities.

Sample Stands and Sampling Procedures

Participants in the regional monitoring program utilize dedicated sample stands for all routine coliform sampling. The purpose of the stands is to have sampling points that: provide water representative of that in the distribution system; are under the control of the utility; are easily accessible 7 days per week; reduce time for collection; and can be located throughout the distribution system. To avoid stagnation and freezing of water in the sample lines, the sample stands flow continuously at about 1/2 gallon per minute.

For routine sampling, handheld field computers are used for identifying sample bottles with sample stand locations and for management of field data. Data from the field computers is then downloaded into the laboratory information management system (LIMS) at SPU. Procedures for collection and transport of samples are provided in Appendix D. Details on the construction and maintenance of the sample stands are provided in Appendices E and F.

Sample Analysis

The SPU Water Quality Laboratory is certified by the State for the following total coliform, fecal coliform, and *E. Coli* analytical methods:

- Colisure (MMO/MUG, Standard Method 9223B)
- Colilert (MMO/MUG, Standard Method 9223B)
- Membrane Filtration (Standard Methods 9222B and 9222D)

Chlorine residual tests are conducted on site with the collection of each coliform sample. SPU typically tests for Heterotrophic Plate Counts (HPCs) on samples with chlorine residual less than 0.2 mg/L, though the chlorine tests kits have a lower detection limit. When chlorine residual is below the detection limit of the testing kit, a HPC less than or equal to 500 organisms/mL is considered equivalent to a detectable chlorine residual (WAC 246-290-451(3), 246-290-662(6), and 249-290-692(5)).

Delineation of Responsibilities: SPU and Wholesale Customers

Sampling and Analysis

- SPU is responsible for scheduling and collecting routine coliform samples and for making routine chlorine residual measurements. One exception is that SeaTac International Airport does all their own sample collection.
- Wholesale customers are responsible for collection of repeat samples and chlorine measurements in follow up to a positive coliform result.
- SPU is responsible for laboratory analysis.
- Wholesale customers are responsible for maintaining their own direct service area coliform monitoring plans. This includes the number and location of sample stands.
- Wholesale customers are responsible for notifying SPU of current population figures for their direct service area at least once per year (see Written Agreements below). SPU will use the population numbers to determine the minimum number of monthly coliform samples required.
- Wholesale customers are responsible for notifying SPU of any unusual circumstances in their distribution system that may warrant a change to the coliform sample collection schedule.

Water System Operation and Maintenance

- SPU is responsible for operation and maintenance of source, source treatment, and transmission facilities.
- Wholesale customers are responsible for operation and maintenance of their own transmission and distribution systems, including sample stations in the distribution system.

Reporting

- SPU serves as the state accredited laboratory and, as such, reports coliform results as required by the state.

Written Agreements

SPU and its wholesale customers have written agreements for water supply, though the agreements do not include sections to address the issue of regional coliform monitoring (WAC 246-290-300(2)(c)(ii). With the 1996 revisions to the regional monitoring program, a supplemental form was developed to meet the requirements for agreements on coliform monitoring. A current version of the form entitled "Continuation Request for Regional Reduced Coliform Monitoring" is included in Appendix G. The form is used to update population figures and to confirm the status of direct service area coliform monitoring plans and other sources of supply.

SPU will send the continuation request form to program participants each year for completion and signature. SPU will then review the form and forward it to the DOH office for their records.

Compliance Determinations

Compliance under the regional program is determined independently for each participating water system. Compliance includes determinations of violation and follow-up requirements, such as repeat testing and public notification. For example, should a water system or systems have positive coliform results, the percentage of positive samples is calculated for each water system separately. If public notification were required, it would apply to the individual participating system rather than all regional participants. Investigation as to the source of the positive results would extend beyond a single system, but compliance is still specific to the water system.

Program Plan Updates

This program plan will be updated once every six years, the frequency for water system plan updates, and submitted to DOH for approval. If requested by DOH, the plan may be updated more frequently. Updates for population, number of samples, sampling schedules, and new sample stands are expected to occur at least annually.

Appendix A – Residential and Non-Residential Population Served and Number of Samples for Regional Participants

Residential and Non-Residential Population Served and Number of Samples for Regional Participants

PWS ID Number	Water System Name	Residential Population on WFI	Regular Non-Residential Population Currently Reported on WFI (1)	Regular Non-Residential Population Reported on Form	Transient Non-Residential Population on WFI	Total Population (sum of previous 4 columns)	Standard Number of Coliform Samples Required for Total Population (2)	Coliform Monitoring Requirements Currently Reported on WFI (3)	Sampling Requirement for Updated Population Numbers (3)
05575B	Bellevue	135,100	-	83,279	-	218,379	120	84	84
07900L	Bothell	15,268	-	12,812	-	28,080	30	21	21
41750C	Coal Creek	9,000	-		-	9,000	10	7	7
207508	Duvall	5,990	1,475		-	7,465	8	6	6
42250T	Kirkland	39,694	3887	3385^	4,302	47,883	50	35	35
536405	Mercer Island	22,890	-		-	22,890	25	18	18
408005	Northshore	70,146	17,670	17670^	-	87,816	90	63	63
03182D	SeaTac Int'l Airport	-	16,000		999,999	49,483	50	25	25
77050Y	Seattle Public Utilities	668,800	-	158,000	-	826,800	270	189	189
39600E	Shoreline	24,706	-	4,660	-	29,366	30	21	21
401008	Soos Creek	62,175	-		-	62,175	70	49	49
89500F	Tukwila	6,250	495		14,000	20,745	20	18	14
41600Y	Woodinville	48,400	-		-	48,400	50	35	35
389502	KCWD #20	38,813	-		-	38,813	40	28	28
39700K	KCWD#45	3,330	478		-	3,808	4	5	5
39800P	KCWD#49	16,610	-		-	16,610	15	11	11
419850	KCWD#119	3,230	546	546^		3,776	4	5	5
41998T	KCWD#125	14,705	-		-	14,705	15	11	11
	Totals	**1,185,107**	**40,551**	**258,751**	**1,018,301**	**1,536,194**	**901**	**631**	**627**

Notes:

(1) Non-residential population that resides outside of Seattle wholesale service area.

(2) Per WAC 246-290-300 Table 2.

(3) Number of samples reduced by 30% for regional reduced monitoring, except Sea Tac, which is reduced by 50% due to predominantly transient population.
Minimum of 5 monthly coliform samples for all participating utilities.

Appendix B – Basic Monthly Coliform Sampling Schedule

Basic Monthly Coliform Sampling Schedule

Sample Station Code	Sample Station Location	Total Samples Per Month	Samples per month on day of week						
			Sunday	Monday	Tuesday	Wednesday	Thursday	Friday	Saturday
CITY OF BELLEVUE									
BE-N1	3625 - 116TH AVENUE NE	4			4				
BE-N2	3046 - 124TH AVENUE NE	4		1				3	
BE-W3	3323 - 102ND AVENUE NE	4						4	
BE-W4	9705 - NE 1ST STREET	4			4				
BE-W5	2240 - 78TH AVENUE NE	4					4		
BE-W6	12655 - NE 6TH STREET	4						4	
BE-W7	10430 - SE 20TH STREET	4			4				
BE-E8	1218 - 164TH AVENUE SE	4		4					
BE-E9	3020 - 169TH AVENUE NE	4		4					
BE-E10	110 - 145TH PLACE NE	4		4					
BE-E11	19213 - SE 46TH PLACE	4					4		
BE-S12	15604 - SE 44th PLACE	4			4				
BE-S13	16870 - SE 58TH STREET	4					4		
BE-S14	14938 - SE 60TH STREET	4					4		
BE-S15	13718 - SE 42ND STREET	4			4				
BE-S16	5800 - FORESTDRIVE SE	4					4		
BE-W17	4305 HUNTS POINT DR	4					1	3	
BE-S18	13234 SE 51ST PLACE	4			3		1		
BE-S19	SE 45TH PL & 121ST AV SE (107-1)	5			4		1		
BE-S20	SE 62ND ST & LAKE WASHINGTON BLVD (107-2)	5			4		1		
BE-S21	SE 60TH ST & 116TH AV SE (107-3)	1			1				
BE-S22	3818 LAKE WASHINGTON BLVD (107-4)	1					1		
BE-S23	125TH AV SE & SE 53RD ST (107-8)	1			1				
	BELLEVUE TOTAL	**85**		**13**	**33**		**25**	**14**	
CITY OF BOTHELL									
BO-1	100TH AVE NE & NE 200TH ST	5		4		1			
BO-2	188TH AVE NE & BOTHELL WAY NE	4		3			1		
BO-3	NE 192 & HOLLY HILLSDR NE	4					4		
BO-4	12102 NE 168th Pl.	4				4			
BO-5	11913 NE 195th St.	4		1			3		
	BOTHELL TOTOAL	**21**		**8**		**5**	**8**		
CEDAR RIVER WATER & SEWER									
108-1	SE 171ST & FAIRWOOD BLVD	7			4		3		
108-2	194TH AVE SE & SE 170TH ST	7			4				3
108-3	23232 SE 241ST	6			3				3
108-4	22704 262 AV SE	5			1			1	3
	CEDAR RIVER TOTAL	**25**			**12**		**3**	**1**	**9**
COAL CREEK UTILITIES									
107-5	9143 122nd AVE SW	**3**					**3**		
107-6	14300 SE 78TH WAY	1					1		
107-7	8400 126TH PL SE	3			3				
	COAL CREEK TOTAL	**7**			**3**		**4**		
CITY OF DUVALL									
DU-1	SEWARD ST & 32RD AVE	3						3	
DU-2	28522 NE 151ST ST LEGACY RIDGE	3						3	
	DUVALL TOTAL	**6**						**6**	

Sample Station Code	Sample Station Location	Total Samples Per Month	Samples per month on day of week						
			Sunday	Monday	Tuesday	Wednesday	Thursday	Friday	Saturday
	KCWD #20								
20-3	S 128 ST & 20TH AVE S	3		3					
20-4	8TH AVE S & S 150TH ST	3		3					
20-5	S 136TH ST & 2ND AVE S	1		1					
20-8	4TH AVE S/5TH AVE S & S 112TH	3		3					
20-9	SW 124TH ST & 5TH AVE SW	3					3		
20-10	4TH AVE SW & SW 137TH ST	3					3		
20-11	12TH AVE S & S 104TH ST	3					3		
20-12	S 106TH PL & 18TH AVE S	1					1		
20-13	15TH AVE S & S 93RD ST	3		3					
20-14	SW 149TH ST & 18TH AVE SW (Formerly 85-1)	5		4	1				
	KCWD #20 TOTAL	**28**		**17**	**1**		**10**		
	KCWD #45								
45-1	10TH AVE SW & SW 104TH ST	**5**		**1**	**3**	**1**			
	KCWD #45 TOTAL	**5**		**1**	**3**	**1**			
	KCWD #49								
49-1	SW 150TH ST BETWEEN AMBAUM BLV	3						3	
49-2	S 168TH ST & AMBAUM BLVD S	3						3	
49-3	SYLVESTER RD SW & SW 172ND ST	3		3					
49-4	SW 162ND ST & 16TH AVE SW	4		4					
	KCWD #49 TOTAL	**13**		**7**				**6**	
	KCWD #119								
119-1	NE 111TH ST & 111TH PINE	3						3	
119-2	10643 LAKE JOYDR NE	3						3	
	KCWD #119 TOTAL	**6**						**6**	
	KCWD #125								
125-1	46TH AVE S & S 144TH ST	4				3		1	
125-2	37TH AVE S & S 130TH ST	3			3				
125-4	29TH AVE S & S 146TH ST	4				3	1		
	KCWD #125 TOTAL	**11**			**3**	**6**	**1**	**1**	
	KIRKLAND								
KI-1	NE 58TH ST & LAKE WASH BVD NE	4			4				
KI-2	NE 120TH ST & 100TH AVE NE	4			4				
KI-3	10TH AVE & 8TH ST	8			3	1		4	
KI-4	128TH AVE NE & NE 104TH ST	8				4		4	
KI-5	122ND AVE NE & NE 80TH ST	4		4					
KI-6	130TH AVE NE & NE 70TH PL	8				4	4		
	KIRKLAND TOTAL	**36**		**4**	**11**	**9**	**4**	**8**	
	MERCER ISLAND								
MI-1	SE 71ST & 78TH AVE SE	4					3	1	
MI-2	SE 48TH & 89TH AVE SE	3					3		
MI-3	65TH PL W & W MERCER WAY	4			4				
MI-4A	ISLAND CREST WAY & SE 39TH ST	4		3	1				
MI-5A	SE 42ND ST & 85TH AV SE	3					3		
	MERCER ISLAND TOTAL	**18**		**3**	**5**		**9**	**1**	

Sample Station Code	Sample Station Location	Total Samples Per Month	Samples per month on day of week						
			Sunday	Monday	Tuesday	Wednesday	Thursday	Friday	Saturday
NORTHSHORE UTILITIES									
79-1	NE 140TH ST & 118TH AVE NE	8		4		4			
79-2	NE 195TH ST & 37TH AVE NE	8		4				4	
79-3	NE 186TH ST & 92ND AVE NE	8		4			4		
79-4	NE 154TH ST & 62ND PL NE	8			4			4	
79-5	NE 114TH ST & 80TH AVE NE	8			4			4	
79-6	NE 197TH CT & 76TH AVE NE	8		4		4			
79-7	109TH AVE NE & NE 128TH ST	8			1	3		4	
79-8	8520 NE 142ND ST	8			4	4			
	NORTHSHORE TOTAL	**64**		**16**	**13**	**15**	**4**	**16**	
SEATTLE PUBLIC UTILITIES									
A-1	RICHMOND BEACH DR NW & NW 195TH	4			3			1	
A-2	N 195TH ST & FREMONT AVE N	4				4			
A-3	N 154TH ST & WALLINGFORD AVE N	4					4		
A-4	NW 178TH ST & 10TH AVE NW	4			3			1	
B-1	NW 105TH ST & 8TH AVE NW	4			4				
B-2	NW 122ND ST & 1ST AVE NW	4				4			
B-3	N 107TH ST & MIDVALE AVE N	4					3	1	
B-4	15TH AVE NW & HOLMAN RD NW	4			4				
C-1	30TH AVE NE & NE 130TH ST	4		4					
C-2	NE 145TH ST & 1ST AVE NE	4							4
C-3	NE 96TH ST & 5TH AVE NE	4	4						
C-4	NE 97TH ST & 44TH AVE NE	4		4					
C-5	11736 9TH AVE NE	4					4		
D-1	NW 63RD ST & 24TH AVE NW	4			4				
D-2	NW 80TH ST & 32ND AVE NW	4					4		
D-3	7514 19TH AVE NW	4			4				
E-1	GREENWOOD AVE N & N 76TH ST	4					4		
E-2A	N 36TH ST & LINDEN AVE N	4					3	1	
E-3	N 82ND ST &DENMORE AVE N	4				4			
E-4	N 50TH ST & MERIDIAN AVE N	4					3	1	
F-1	33RD AVE NE & NE 57TH ST	4		4					
F-2	NE 72ND ST & 12TH AVE NE	4				4			
F-3	8TH AVE NE & NE 50TH ST	4		4					
F-4	NE 75TH ST & 50TH AVE NE	4		4					
F-5	NE 41ST ST & 45TH AVE NE	4				4			
G-1	32ND AVE W & W SMITH ST	4					4		
G-2	W EMERSON ST & PERKINS LANE W	4					4		
H-1	N. HOWE ST & 3RD AVE N	3				3			
H-2	13TH AVE W & W NICKERSON ST	4			4				
I-1	McGILVRA BLVD E & E NEWTON ST	4						4	
I-2	10TH AVE E & E SHELBY ST	4			4				
I-3	11TH AVE E & E PROSPECT ST	4						4	
J-1	PONTIUS AVE N & HARRISON ST	3		1	2				
J-2	4TH AVE & BATTERY ST	4							4
J-3	ALASKA WAY & SPRING ST	4				1		3	
J-4	8TH AVE & YESLER WAY	3			2	1			
J-5	MINOR AVE & SENECA ST	3		3					
J-6	1300 S WELLER ST	4	4						
K-1	11TH AVE E & E OLIVE WAY	3				3			
K-2	23RD AVE S & S LANE ST	4							4
K-3	34TH AVE E & E PIKE ST	4						4	
L-1	13TH AVE SW & SW FLORIDA ST	3			2	1			
L-2	SW HILL ST & 44TH AVE SW	4							4

Sample Station Code	Sample Station Location	Total Samples Per Month	Samples per month on day of week						
			Sunday	Monday	Tuesday	Wednesday	Thursday	Friday	Saturday
L-3	25TH AVE SW & SW ALASKA ST	3				3			
L-4	62ND AVE SW & SW SPOKANE ST	4							4
M-1A	UTAH S & S STACY ST	4	4						
M-2	13TH AVE S & S PEARL ST	4		3			1		
M-3	31ST AVE S & S LANDER ST	3				3			
M-4	S BATEMAN ST & 44TH AVE S	4						4	
M-5	5940 24TH AVE S	3		3					
M-6	17TH AVE S & S STEVENS ST	3			1	2			
M-7	2530 S GRAHAM ST	4						4	
N-1	34TH AVE SW & SW BARTON ST	4							4
N-2	44TH AVE SW & SW HOLLY ST	4							4
N-3	8TH AVE S & S SULLIVAN ST	4				4			
N-4	35TH AVE SW & SW OCEAN VIEWDR	3			2	1			
O-1	FLORA AVE S & S WARSAW ST	3		3					
O-2	SEWARD PARK AV S & S HENDERSON	4				4			
O-3	59TH AVE S & S NORFOLK ST	4				4			
P-1	SW 104TH ST & 24TH AVE SW (TOP	4							4
P-2	10TH AVE SW & SW 120TH ST (BUR	3		3					
SH-1	W SHOREWOODDR & W CONCORD WAY	1			1				
UW-1	UW BTN ATMOSPHERIC SCI.BLDG &	4							4
VR-1	5421 NE 75TH ST - VRR CHECKPT	4		4					
	SPU TOTALS	**240**	**12**	**40**	**40**	**50**	**34**	**28**	**36**
SHORELINE WATER DISTRICT									
42-1	5TH AVE NE & NE 155TH ST	2		2					
42-2	20320 BALLINGER RD NE	2				2			
42-3	NE 178TH ST & BROOKSIDE BLV	2					2		
42-4	NE SERPENTINE PL/10TH AVE NE	2					2		
42-5	NE 200TH ST/30TH AVE NE	2			1	1			
42-6	2325 NE PERKINS WAY	2		1			1		
42-7	1612 NE 186TH ST	2			1		1		
42-8	17125 HILLSIDEDR NE	3		3					
42-9	3404 NE 160TH ST	2		2					
42-10	1888 NE 171ST ST	2						2	
	SHORELINE TOTAL	**21**		**8**	**2**	**3**	**6**	**2**	
SOOS CREEK WATER & SEWER									
58-1	111TH AVE SE & SE 176TH ST	7	4					3	
58-2	120TH AVE SE & SE 236TH ST	7				3	3		1
58-3	108TH AVE SE & SE 204TH ST	7		4		3			
58-4	121ST AVE SE & SE 157TH PL	10			3	3	4		
58-5	148TH AVE SE & SE 183RD ST	8			4		1	3	
58-6	125TH AVE SE &* 126TH AVE SE	4						1	3
58-7	SE 230TH ST & 134TH AVE SE	7		3			3		1
	SOOS CREEK TOTAL	**50**	**4**	**7**	**7**	**9**	**11**	**7**	**5**
CITY OF TUKWILA									
TU-1	65TH AVE S & SOTHCENTER BLVD	5		1	4				
TU-2	S 122ND ST & 46TH AVE S	5		4		1			
TU-3	1232 ANDOVER PARK WEST	4						4	
TU-4	53RD AVE S NEAR S 140TH ST	4					1	3	
	TUKWILA TOTAL	**18**		**5**	**4**	**1**	**1**	**7**	

Sample Station Code	Sample Station Location	Total Samples Per Month	Samples per month on day of week						
			Sunday	Monday	Tuesday	Wednesday	Thursday	Friday	Saturday
WOODINVILLE WATER DISTRICT									
104-1	136TH AVE NE & NE 190TH PL	4				1	3		
104-2	NE 195TH ST & 168TH AVE NE	4				1	3		
104-3	132ND AVE NE & NE 132ND	4			4				
104-4	MINK ROAD NE & NE 72ND PL	4					4		
104-5	NE 150TH ST & 232ND AVE NE	4					1	3	
104-6	NE 133RD ST & 198THDR NE	4					4		
104-7	NE 153RD ST & 158TH AVE NE	3					3		
104-8	19117 194TH AVE NE	4						4	
104-9	NE 142ND ST & 180TH AVE NE	4						4	
	WOODINVILLE TOTAL	**35**			**4**	**2**	**18**	**11**	

Appendix C – Sampling Routes

UPDATED – 3/3/2011 REVISED

1ST, 2ND, & 3RD WEEKs

11/2/2012

SUNDAY	MONDAY	TUESDAY	WEDNESDAY	THURSDAY	FRIDAY	SATURDAY
NOTE: UVA: Collect: every Monday, Wednesday and Friday at CPR-1 Collect every Monday at CPR-1 and TPR-2 TOC: Collect the 4TH Monday of the month at CPR-1 (Route 42P)	12N-22N-32N [18] BE-E8, BE-E9*, BE-E10 BO-1, BO-2 KI-5 42-1, 42-9 79-1, 79-3, 79-6 C-1, C-4, F-1, F-3, F-4, VR-1 TT-22(chem only) 22N [17] OMIT 42-1,42-9 ADD 42-6	13N-23N-33N [18] BE-N1, BE-W4, BE-W7 KI-1, KI-2, KI-3 OV-2 79-4, 79-5, 79-8 104-3 A-1, A-4, B-1, B-4, D-1, D-3, H-2	14N – 34N [18] BO-4 HI-1 KI-4, KI-6 OV-1, OV-3, OV-4. OV-6 42-2 79-1, 79-6, 79-7, 79-8 A-2, B-2, E-3, E-2, F-5 24N-TS [17] OMIT 42-2	15N – 35N [15] BE-W5 BO-5, BO-3 KI-6 42-3, 42-4 79-3 104-1, 104-2, 104-4, 104-6, 104-7 A-3, C-5, D-2, 25N-TS [15] Add 42-7, 42-6 OMIT 42-3,42-4	16N-26N- 36N [14] BE-N2, BE-W3, BE-W6, BE-W17 DU-1, DU-2 KI-3, KI-4 79-7 104-5, 104-8, 104-9 119-1, 119-2	SPECIAL ROUTE (1x per month) T&SP NORTH [10] BLR, FYS, LFR-E, LFR-W, MGR, MGT, RHT-N, RHT-S, QAS-Mid, BNR
*pH/chemistry samples collected at double underlined sites ** - DeltaTox sampling sites.	12S – 32S [17] 20-3, 20-4, 20-8, 20-13, 20-14 49-3, 49-4 75-1, 75-2, 75-3, 75-4, 75-7, 75-8 58-3, 58-7, 90-6, MI-4A 22S-TS [18] Add BPT, RVR-1, SCR-N-O, SCR-S-O Omit 75-3, 75-4, 90-6	13S – 33S [14] BE-S12, BE-S15, BE-S18, BE-S19, BE-S20 MI-3, 45-1 107-7 125-2 58-4, 58-5, 108-3, 108-1, 108-2 23S-TS [15] Add ESR	14S – 34S [15] BML-1, BML-4 75-1, 75-2, 75-4,75-7, 75-8 125-1, 125-4 N-3, O-2, O-3 58-2, 58-3, 58-4 24S-TS [12] Add CHT, TRT-N, TRT-S. Omit: 75-1, 75-2, 75-7, 75-4, 75-8, BML-1	15S, 25S, 35S [14] BE-E11, BE-S13, BE-S14, BE-S16 MI-1, MI-2, MI-5a 75-1, 75-2 107-5 58-2, 58-4, 58-7 108-1	16S, 26S, 36S [15] 49-1, 49-2 75-2, 75-3, 75-4, 75-5, 75-7, 75-8, 75-9 58-1, 58-5 90-1, 90-2 TU-3, TU-4	SPECIAL ROUTE (1x per month) T&SP SOUTH [14] BPT, BRT, CHT, LNR-N, LNR-S, MYT-L, MYT-S, , TRT-N, TRT-S, VOS MYR, RVR-1, SCR-N-O, SCR-S-O
11PR- 21PR- 31PR [13] 58-1 [TA-R1/TA-R5, TA-T1/TA-T5] [CPR-1] [C1-RAW or C2-RAW] [C1-FIN, C2-FIN] CT-1, CT-2, CT-3 C-3, J-6, M-1a CPT-00 (F- only) RESERVOIR PATROL GLR, VOR	12P- 22P- 32P [12] [TA-R1/TA-R5, TA-T1/TA-T5] [CPR-1] [C1-RAW or C2-RAW] [C1-FIN, C2-FIN] CLT-4, CLT-5 CT-1, CT-2, CT-3, TT-3 CPT-00 (F- only) CPT-04, CPT-05 (Cl_2 Only) Collect UVA from CPR-1	13P- 23P- 33P [21] [TA-R1/TA-R5, TA-T1/TA-T5] TA-WS(10)] [CPR-1] [C1-RAW or C2-RAW] [C1-FIN, C2-FIN] CLT-4, CLT-5 CT-1, CT-2, CT-3 CPT-00 (F- only) CPT-04, CPT-05 (Cl_2 Only)	14P- 24P- 34P [13] [CFWH, CF-1] [TA-T1/TA-T5 TA-R1/TA-R5] [CPR-1] [C1-RAW or C2-RAW] [C1-FIN, C2-FIN] CLT-4, CLT-5 CT-1, CT-2, CT-3 CPT-00 (F- only) CPT-04, CPT-05 (Cl_2 Only) Collect UVA from CPR-1	15P- 25P- 35P [13] [TA-R1/TA-R5, TA-T1/TA-T5] [CPR-1] [C1-RAW or C2-RAW] [C1-FIN, C2-FIN] CLT-4, CLT-5 CT-1, CT-2, CT-3 CPT-00 (F- only) CPT-04, CPT-05 (Cl_2 Only) CT-4, WSP-1	16P- 26P- 36P [11] [TA-R1/TA-R5, TA-T1/TA-T5] [CPR-1] [C1-RAW or C2-RAW] [C1-FIN, C2-FIN] CLT-4, CLT-5 CT-1, CT-2, CT-3 CPT-00 (F- only) CPT-04, CPT-05 (Cl_2 Only) Collect UVA from CPR-1	17P- 27P- 37P [13] 58-6 108-4, 108-2, 108-3 [TA-R1/TA-R5, TA-T1/TA-T5] [CPR-1] [C1-RAW or C2-RAW] [C1-FIN, C2-FIN] CLT-4, CLT-5 K-2 CPT-00 (F- only) CPT-04, CPT-05 (Cl_2 Only)
SPECIAL ROUTE (Daily by Courier) TPR-5N &/or TPR-5S T-FINISH	SPECIAL ROUTE (Daily by Courier) TPR-5N &/or TPR-5S T-FINISH	SPECIAL ROUTE (Daily by Courier) TPR-5N &/or TPR-5S T-FINISH	SPECIAL ROUTE (Daily by Courier,) TPR-5N &/or TPR-5S T-FINISH	SPECIAL ROUTE (Daily by Courier) TPR-5N &/or TPR-5S T-FINISH	SPECIAL ROUTE (Daily by Courier) TPR-5N &/or TPR-5S T-FINISH	SPECIAL ROUTE (Daily by Courier) TPR-5N &/or TPR-5S T-FINISH
	12R – 32R [11] 42-8, 79-2, M-2 M-5, TU-2,J-5, O-1,P-2 TT-1, TT-11, TT-2 22R-TS [9] Add: LNR-N, LNR-S, VOS- 42-8 Omit: M-5, J-5, O-1,P-2	13R – 33R [12] I-2, TU-1, J-4, J-1, L-1, N-4 TT-1, TT-11, TT-2 13R – MGT, MGR 33R – RHT-N,S 23R-TS [12] Add BLR, FYS, QAS-Mid MYR, BNR 42-5 Omit: J-1, J-4, L-1, N-4	14R – 34R (12) M-6, H-1, K-1, L-3, M-3 TT-1, TT-11, TT-2 GL-1, VO-1 GLR, VOR 24R-TS [10] Add LFR-E, LFR-W, WS-1 Omit: M-6, H-1, K-1, L-3, M-3	15R – 35R [12] B-3, E-1, E-2A, E-4, 20-9, 20-10, 20-11 Siphon- N , Siphon-S TT-1, TT-11, TT-2 G-1 G-2 25R-TS [15] Add BRT, MYT-L, MYT-S	16R-26R- 36R [13] 42-10 79-2, 79-4, 79-5 J-3 TT-1, TT-11, TT-2 M-4, M-7 I-1, I-3, K-3 26R [12] Omit 42-10	17R- 27R- 37R [14] C-2, J-2, N-2, UW-1 TT-1, TT-11, TT-2 CT-1, CT-2, CT-3 P-1, N-1 L-2, L-4

Note: Routes with **"-TS"** designation (22S-TS, 22R-TS, 23S-TS, 23R-TS, 24N-TS, 24S-TS, 24R-TS, 25N-TS, and 25R-TS) includes Tanks and Standpipes and are collected mid-month. Routine Tanks and Standpipes routes are scheduled the last week of the month (Routes T&SP-N and T&SP-S).

UPDATED – 3/3/2011 **4TH WEEK** **11/2/2012**

SUNDAY	MONDAY	TUESDAY	WEDNESDAY	THURSDAY	FRIDAY	SATURDAY
	42N [16] BE-N2, BE-E8, BE-E9, BE-E10 BO-1, BO-5 KI-5 79-1, 79-3, 79-6 C-1, C-4, F-1, F-3, F-4, VR-1	**43N** [15] BE-N1, BE-W4, BE-W7 KI-1, KI-2 79-4, 79-5, 79-7, 79-8 104-3 B-1, B-4, D-1, D-3, H-2	**44N** [17] BO-1, BO-4 KI-3, KI-4, KI-6 OV-2 42-5 79-1, 79-6, 79-8 104-1, 104-2 A-2, B-2, E-3, E-2, F-5	**45N** [13] BE-W5, BE-W17 BO-2, BO-3 KI-6 104-4, 104-5, 104-6 79-3 A-3, C-5, D-2, TT-22(chem only),	**46N** [13] BE-W3, BE-W6 KI-3, KI-4 MI-1 104-8, 104-9 79-7 A-1. A-4, B-3, E-2a, E-4	
	42S [15] TU-1, TU-2 20-5, 20-14 45-1 49-4 75-1, 75-2, 75-3, 75-4, 75-7, 75-8 58-3, 90-6, 90-8	**43S** [16] BE-S12, BE-S15, BE-S19, BE-S20, BE-S21, BE-S23 MI-3, MI-4a SH-1, ESR 58-5, 90-2, 90-5 108-1, 108-2, 108-4	**44S** [15] BML-2, BML-3 TU-2 45-1 75-1, 75-2,75-4 H-1, J-3, K-1, L-3, M-3, N-3, O-2, O-3	**45S** [16] BE-E11, BE-S13, BE-S14, BE-S16, BE-S18, BE-S19, BE-S20, BE-S22 75-1, 75-2 125-4 58-4, 58-5, 107-6	**46S** [11] 125-1 , 75-2, 75-3, 75-4, 75-5, 75-7, 75-8, 75-9 58-6, 108-4, TU-3	
41PR [13] 58-1 [TA-R1/TA-R5, TA-T1/TA-T5] [CPR-1] [C1-RAW or C2-RAW] [C1-FIN, C2-FIN] CT-1, CT-2, CT-3 C-3, J-6, M-1a CPT-00 (F^- only) RESERVOIR PATROL GLR, VOR	**42P** [11] [TA-R1/TA-R5, TA-T1/TA-T5] [CPR-1] [C1-RAW or C2-RAW] [C1-FIN, C2-FIN] CLT-4, CLT-5 CT-1, CT-2, CT-3, TT-3 CPT-00 (F^- only) CPT-04, CPT-05 (Cl_2 Only) **Collect UVA & TOC from CPR-1**	**43P** [21] [TA-R1/TA-R5, TA-T1/TA-T5] TA-WS(10)] [CPR-1] [C1-RAW or C2-RAW] [C1-FIN, C2-FIN] CLT-4, CLT-5 CT-1, CT-2, CT-3 CPT-00 (F^- only) CPT-04, CPT-05 (Cl_2 Only)	**44P** [13] [CFWH, CF-1] [TA-R1/TA-R5, TA-T1/TA-T5] [CPR-1] [C1-RAW or C2-RAW] [C1-FIN, C2-FIN] CLT-4, CLT-5 CT-1, CT-2, CT-3 CPT-00 (F^- only) CPT-04, CPT-05 (Cl_2 Only) Collect UVA from CPR-1	**45P** [13] [TA-R1/TA-R5, TA-T1/TA-T5] [CPR-1] [C1-RAW or C2-RAW] [C1-FIN, C2-FIN] CLT-4, CLT-5 CT-1, CT-2, CT-3, CPT-00 (F^- only) CPT-04, CPT-05 (Cl_2 Only) CT-4, WSP-1	**46P** [11] [TA-R1/TA-R5, TA-T1/TA-T5] [CPR-1] [C1-RAW or C2-RAW] [C1-FIN, C2-FIN] CLT-4, CLT-5 CT-1, CT-2, CT-3 CPT-00 (F^- only) CPT-04, CPT-05 (Cl_2 Only) Collect UVA from CPR-1	**47P** [11] 58-2, 58-7 [TA-R1/TA-R5, TA-T1/TA-T5] [CPR-1] [C1-RAW or C2-RAW] [C1-FIN, C2-FIN] CLT-4, CLT-5 K-2 CPT-00 (F^- only) CPT-04, CPT-05 (Cl_2 Only)
SPECIAL ROUTE *(Daily by Courier)* **TPR-5N &/or TPR-5S** **T-FINISH**	***SPECIAL ROUTE*** *(Daily by Courier)* **TPR-5N &/or TPR-5S** **T-FINISH**	***SPECIAL ROUTE*** *(Daily by Courier)* **TPR-5N &/or TPR-5S** **T-FINISH**	***SPECIAL ROUTE*** *(Daily by Courier)* **TPR-5N &/or TPR-5S** **T-FINISH**	***SPECIAL ROUTE*** *(Daily by Courier)* **TPR-5N &/or TPR-5S** **T-FINISH**	***SPECIAL ROUTE*** *(Daily by Courier)* **TPR-5N &/or TPR-5S** **T-FINISH**	***SPECIAL ROUTE*** *(Daily by Courier)* **TPR-5N &/or TPR-5S** **T-FINISH**
	42R [9] 79-2 J-1 TT-1, TT-11, TT-2 J-5, Q-1, P-2, M-5	**43R** [11] I-2, TT-1, TT-11, TT-2 42-7 20-14, TU-1 90-3, 90-4, 90-7, M-6	**44R** [11] TT-1, TT-11, TT-2 GL-1, VO-1 GLR, VOR, WS-1 J-4, L-1, N-4	**45R** [9] E-1 TT-1, TT-11, TT-2 G-1 G-2 20-12, M-2, TU-4	**46R** [11] 79-2, 79-4, 79-5 TT-1, TT-11, TT-2 M-4, M-7, I-1, I-3, K-3	**47R** [14] C-2, J-2, N-2, UW-1 TT-1, TT-11, TT-2 CT-1, CT-2, CT-3 P-1, L-4 L-2, N-1

UPDATED – 3/3/11 **5TH WEEK** **11/2/2012**

SUNDAY	MONDAY	TUESDAY	WEDNESDAY	THURSDAY	FRIDAY	SATURDAY
51PR [12] [TA-R1/TA-R5, TA-T1/TA-T5] [CPR-1] [C1-RAW or C2-RAW] [C1-FIN, C2-FIN] **CT-1, CT-2, CT-3** CPT-00 (F^- only) RESERVOIR PATROL GLR, VOR	**52P** [14] [TA-R1/TA-R5, TA-T1/TA-T5] [CPR-1] [C1-RAW or C2-RAW] [C1-FIN, C2-FIN] **CLT-4, CLT-5** CPT-00 (F^- only) CPT-04, CPT-05 (C_{l2} Only) **Collect UVA from CPR-1**	**53P** [26] [TA-R1/TA-R5, TA-T1/TA-T5] TA-WS(10)] [CPR-1] [C1-RAW or C2-RAW] [C1-FIN, C2-FIN] **CLT-4, CLT-5** CPT-00 (F^- only) CPT-04, CPT-05 (C_{l2} Only)	**54P** [14] [TA-R1/TA-R5, TA-T1/TA-T5] [CPR-1] [C1-RAW or C2-RAW] [C1-FIN, C2-FIN] **CLT-4, CLT-5** CPT-00 (F^- only) CPT-04, CPT-05 (C_{l2} Only) **Collect UVA from CPR-1**	**55P** [14] [TA-R1/TA-R5, TA-T1/TA-T5] [CPR-1] [C1-RAW or C2-RAW] [C1-FIN, C2-FIN] **CLT-4, CLT-5** CPT-00 (F^- only) CPT-04, CPT-05 (C_{l2} Only)	**56P** [14] [TA-R1/TA-R5, TA-T1/TA-T5] [CPR-1] [C1-RAW or C2-RAW] [C1-FIN, C2-FIN] **CLT-4, CLT-5** CPT-00 (F^- only) CPT-04, CPT-05 (C_{l2} Only) **Collect UVA from CPR-1**	**57P** [14] [TA-R1/TA-R5, TA-T1/TA-T5] [CPR-1] [C1-RAW or C2-RAW] [C1-FIN, C2-FIN] **CLT-4, CLT-5** CPT-00 (F^- only) CPT-04, CPT-05 (C_{l2} Only)
SPECIAL ROUTE *(Daily by Courier)* **TPR-5N &/or TPR-5S** **T-FINISH**	***SPECIAL ROUTE*** *(Daily by Courier)* **TPR-5N &/or TPR-5S** **T-FINISH**	***SPECIAL ROUTE*** *(Daily by Courier)* **TPR-5N &/or TPR-5S** **T-FINISH**	***SPECIAL ROUTE*** *(Daily by Courier)* **TPR-5N &/or TPR-5S** **T-FINISH**	***SPECIAL ROUTE*** *(Daily by Courier)* **TPR-5N &/or TPR-5S** **T-FINISH**	***SPECIAL ROUTE*** *(Daily by Courier)* **TPR-5N &/or TPR-5S** **T-FINISH**	***SPECIAL ROUTE*** *(Daily by Courier)* **TPR-5N &/or TPR-5S** **T-FINISH**
	52R [3] **TT-1, TT-11, TT-2** **CT-1, CT-2, CT-3**	**53R** [3] **TT-1, TT-11, TT-2** **CT-1, CT-2, CT-3**	**54R** [7] **TT-1, TT-11, TT-2** **GL-1, VO-1** **GLR, VOR** **CT-1, CT-2, CT-3**	**55R** [3] **TT-1, TT-11, TT-2** **CT-1, CT-2, CT-3**	**56R** [5] **TT-1, TT-11, TT-2** **CT-1, CT-2, CT-3**	**57R** [3] **TT-1, TT-11, TT-2** **CT-1, CT-2, CT-3**

Appendix D – Recommended Instructions for Sample Collection

1. Check calendar to determine your route and take a handheld PC with the appropriate route downloaded on it and field data sheet.
2. Grab sterilized sample bottles from the sample receiving room and place in cooler. Two ice packs are required for the large coolers and a single ice pack is required for the small coolers. Always take at least 2 to 3 extra bottles along with you in case a sample bottle is contaminated in the field. Make sure the sample bottles are designated for bacteriological use and are labeled with a SPU Water Quality LIMS bar code.
3. When you arrive at the sample stand check the flow. If the water is not flowing or flowing at a low velocity, flush the sample stand at a high velocity for 5 to 10 minutes. Then return the flow to an acceptable velocity and allow to flow for an additional 2 to 3 minutes. Before sampling, scan the bar code of the Sample Site (inside the sample stand) and sample bottle with the handheld. Then measure the water temperature and chlorine residual by using the digital thermometer and digital HACH Pocket Colorimeter. Enter the results into your handheld PC and record on your field data sheet. You may then collect a sample.
4. When you are ready to collect a sample, hold the bottle at the base and unscrew the cap. Hold the cap so that the threads are facing downward. Do not set the sample cap down and do not allow your fingers to touch the inner surface of the cap.
5. Immediately fill the sample bottle up to the shoulder leaving ample air space (approximately 1 inch of air space is adequate). Avoid splashing while filling the bottle and do not overflow the bottle. If you do overfill the bottle, get a new sample bottle and try again. At no point during sampling should the sample bottle touch the sample tap or any other surface.
6. After filling the bottle to the appropriate level, immediately cap the bottle securely. Write the sample location on the bottle label and place bottle in an upright position in the cooler. Do not throw or toss the bottle in the cooler. It is important that samples remain cool (<10°C) during transit, so keep cooler lid closed when not in use.
7. If at any point you are uncertain of the sterility of the sample bottle or your sample collection technique, get a new bottle and start all over. It's always better to be safe.
8. After collecting and capping sample, flush sample stand at a high velocity for 2 to 3 minutes. This is very important to minimize bacterial growth in the sample stand.
9. After completing route, check to make sure that all of the samples listed on your field data sheet have been collected. Do not collect samples from locations which are not listed on your field data sheet. Once back at the lab, download the handheld to the LIMS computer and generate the LIMS sample labels for each sample collected. Review and check that the field data has been entered into the LIMS correctly.
10. Keep your coolers clean. At least once a week, clean out your coolers with soap and water.

Appendix E – Sample Stand Construction Drawing

Appendix F – Sample Stand Maintenance and Disinfection

Recommended Maintenance Schedule

1. Disinfect - yearly or when a sample is positive for coliform.
2. Painting - every three years or as needed.
3. Trim brush - yearly or as needed.
4. Replace valves - inspect yearly and replace as needed.
5. Piping and hose - inspect yearly and replace as needed.
6. Meter box - inspect yearly and clean as needed.

Sample Stand Disinfection

<u>Required Equipment</u>

- Household bleach (non-scented, no detergents)
- Squeeze bulb, bucket, and tubing
  or Garden sprayer and tubing
- Large rag
- Personal protective equipment - rubber gloves and eye protection
- Hose clamps

Caution: when using chlorine bleach, always use appropriate personal protective equipment. This should include rubber gloves and eye protection.

<u>Suggested Procedures (Approaches 5A and 5B below are both effective)</u>

1. Turn off the supply valve in the meter box.
2. Open the needle valve at the sample stand outlet.
3. Drain the sample stand by opening the petcock in the meter box.
4. Mix 4 parts water to 1 part household bleach (this is about 10,500 parts per million).
5. Approach A:
   i. Fill a plastic bucket with bleach solution.
   ii. Connect one piece of flexible Tygon tubing to the squeeze bulb outlet and attach the other end to the needle valve.
   iii. Connect a second piece of tubing to the squeeze bulb inlet and place the other end in the bucket with bleach solution.
   iv. Using the squeeze bulb, pump the chlorinated water through the sample stand out the petcock.
   v. Close the petcock, then close the needle valve.

   Approach B:
   i. Fill a small garden sprayer with the bleach solution (sprayer must be used only for bleach solution; i.e., no previous use for yard or garden chemicals).
   ii. Connect a piece of flexible Tygon tubing over the sprayer's nozzle tip and attach the other end to the petcock in the meter box.
   iii. Using the garden sprayer, pump the chlorinated water up through the sample stand out the needle valve.
   iv. Close the needle valve, then close the petcock.
   v. Slowly release pressure on the sprayer (consider placing a large rag over the lid to prevent splashing of chlorinated water).
6. Allow chlorinated water to stay in the stand for 15 minutes, then flush the stand by opening the needle valve first, followed by the supply valve.

Appendix G – Continuation Request Form

Seattle Public Utilities

Continuation Request for Regional Reduced Coliform Monitoring

---

Instructions

Annual completion and submittal of this form to SPU is required in order to qualify for reduced coliform monitoring under the regional coliform monitoring program. Please complete this form and return it to:

Lynn Kirby
Seattle Public Utilities
800 S. Stacy Street
Seattle, WA 98134
(Fax. 206-684-4133)

After reviewing the form, SPU will forward a copy to the Dept. of Health, Northwest Regional Office.

Water System Name:_____

Water System ID#: _____ Update Year:_____

Contact Name:_____

Contact Phone:_____ Contact Email:_____

Signature _____ Date: _____

Population

Permanent Residential _____

Permanent Non-residential _____ (where appropriate)

Transient _____ (where appropriate)

Individual Coliform Monitoring Plan

Does your utility have a current Coliform Monitoring Plan approved by DOH? Yes☐ No☐

Have you provided SPU with a copy of your current plan? Yes☐ No☐

Additional Source or Treatment

Does your utility have any non-emergency sources of water other than the SPU supply? Yes☐ No☐

Does your utility provide any water treatment to the SPU supply? Yes☐ No☐

If yes, please explain:_____

WATER QUALITY REGULATORY COMPLIANCE HANDBOOK

SECTION 2.1

TOTAL COLIFORM RULE
(City of Kirkland)

TABLE OF CONTENTS **PAGE**

2.1a	Background on Rule	1
2.1b	Sample Analysis/Reporting to the State	3
2.1c	Water System Overview	4
2.1d	Operational Responses to Non-Conforming Samples	5
	• Selecting Sample Sites	5
	• Sample Stand Locations	6
	• Tank Cleaning Plan	7
	• Flushing Options	7
	• System Analysis	7
	• Sample Stand Cleaning Plan	7
	• PRV/Pump Station Locations	8
2.1e	Public Notification for Non-Compliance	12
	• Key Contacts for Utility Decision's Response	12
	• Non-Acute Violations	12
	• Acute Violations Radio/TV Notification	13
	• Radio/TV Notification Within 24 Hours	14
	• Key Contacts for Interaction w/DOH	14
2.1f	Glossary of Terms	15

Section 2.1a - Background on the Rule

In June 1989, the Environmental Protection Agency (EPA) promulgated a revised regulation for total coliforms.* Where the previous regulation was based on the density of coliforms in a given volume of water, the revised rule is based on the presence/absence of coliforms. Under the TCR, (Total Coliform Rule) utilities must develop a monitoring plan to collect representative samples of water throughout the distribution system. Monitoring frequency is based on population served. For a Type A system, "compliance is based on no more than 5% of the samples collected during the month being coliform positive. Additionally, coliform positive samples must be analyzed for fecal coliforms and/or E.Coli.* Follow-up samples collected for positive coliforms, must also be analyzed for fecal coliforms and/or E-Coli. The TCR was effective December 31, 1990. The TCR was implemented and enforced in Washington under the Federal Rule on September 1, 1991. The TCR was adopted and effective in the Washington Drinking Water Regulations in February 1992.

The maximum contaminant Level (MCL) for total coliforms is as follows:

1. For a system collecting more than 40 samples per month, a non-acute* violation occurs when more than 5.0% of the samples collected during the month are coliform positive.
2. For systems collecting less than 40 samples per month, non-acute violation occurs when there is more than one positive coliform sample in a given month.
3. **ACUTE MCL**. An acute MCL for coliform bacteria occurs when there is:
   a. Fecal coliform presence in a repeat sample;
   b. E. Coli presence in a repeat sample; or
   c. Coliform presence in a set of repeat samples collected as a follow-up to a sample with fecal coliform or E. Coli presence.

See Glossary

Section 2.1a - Background on the Rule - continued

Concerns were raised about the TCR because no variances or exemptions were allowed. The concern was that biofilm in the distribution system may lead to violations of the TCR even though there would be a demonstrable risk to public health. In August 1989, the American Water Works Association (AWWA) filed a legal petition to review the rule in the U.S. court of Appeals. As a result of those activities, EPA agreed to allow variances to systems not at risk for fecal or pathogenic contamination. EPA developed interim criteria as guidance to states seeking to identify systems that could operate under a variance without posing an unreasonable risk to health. In the future, EPA will establish variance criteria. Public notification is required for a Type A system operating under a variance.

The state can invalidate a positive total coliform sample under three conditions: 1) the laboratory determines that improper sample analysis caused the total coliform-positive result, 2) the state determines that the coliform sample resulted from a domestic or other non-distribution system plumbing problem (the state cannot invalidate a sample on the basis of repeat sample results, unless all repeat samples collected within five service connections of the original tap are total coliform-negative), or 3) the state has substantial grounds to believe that a total coliform-positive result is due to a circumstance or condition which doesn't reflect water quality in the distribution system. A laboratory must invalidate a total coliform sample (unless total coliforms are detected) if the sample produces a turbid culture in the absence of gas production, using an analytical method where gas formation is examined.

Section 2.1 - Total Coliform Rule

Section 2.1a - Background on the Rule - continued

Local Sampling and Monitoring Program Routine Sampling

Under the Washington State Board of Health Drinking Water Regulations for total coliforms, the number of samples a utility is required to collect each month to determine compliance under the total coliform rule, is based on population served (resident and non-resident population). Based on total population served, Kirkland is required to test

at least 35 routine samples. In response to a 1972 request from the Washington Department of Health (Washington Department of Social and Health Services in 1972), the City of Seattle developed a coliform rule monitoring plan for its direct customers and for the wholesale distribution areas. Under the agreement with the State, the City of Seattle water quality laboratory is responsible for collecting and analyzing drinking water samples from all of the direct and wholesale service areas. This are represents approximately 1.7 million people in King and Snohomish Counties. Under this agreement Seattle and its purveyors sample at a rate of at least 0.7 sample per 1000 customer samples per month.

Section 2.1b - Sample Analysis/Reporting to the State

According to the Washington drinking water regulations, the Department of Health must be notified:

- Within 10 days of the presence of coliform in a sample.
- By the end of the day, when the purveyor is notified by the laboratory of the presence of fecal coliform or E- Coli.

After contacting the City of Kirkland with a confirmed violation the testing laboratory (Seattle Water Department) will contact WDOH with the lab results. The City of Kirkland will also contact WDOH to coordinate public notification requirements.

Section 2.1c - Water System Overview - City of Kirkland

The City of Kirkland buys its water from The City of Seattle. Seattle Water provides drinking water to approximately 1.7 million people in the Puget Sound area on a wholesale and retail (direct service) basis. In 1975 EPA agreed to the implementation of a regional coliform monitoring plan for the total Seattle served system on the basis that the direct service and wholesale areas share the same sources, primary treatment plants, and transmission grid.

The sources of supply for the region are the Cedar River Supply, the South Fork Tolt River, and the Highline Wellfield which is used only on a seasonal basis. None of these supplies is currently filtered. The Cedar and the Tolt's primary treatment include physical screening, disinfected with gaseous chlorine, fluoridation, and corrosion treatment with lime and soda ash on the Tolt. The Highline Wellfield is chlorinated, fluoridated, and treated for corrosion control with sodium hydroxide. Kirkland's water comes primarily from the Tolt River Supply.

Sample stands are used to overcome the problems of gaining daily access to public and private premises for water quality sampling. These stands are located to represent different population concentrations, sources of supply, pressure zones and storage facilities so that representative water samples can be taken.

City of Kirkland's service area includes 12,400 water connections. This area is located in East King County. The surrounding purveyors include the City of Redmond to the east, City Bellevue to the south, Woodinville Water District to the Northeast, and Northshore Utility District to the Northwest. The City has interties with the City of Bellevue and the City of Redmond. The direct service areas cover approximately 7 square miles.

City of Kirkland has 1- 11.2 million gallon reservoir and 1- 14.3 million gallon reservoir in the direct service area to provide equalizing storage and fire flows.

Section 2.1 - Total Coliform Rule

The City of Kirkland currently has no form of gaseous or hypochlorination to boost residuals in the system. All chlorinating is done by manual means of introducing CL2 pellets into the storage facilities during peak or demand situations. Kirkland's distribution system is comprised of over 169 miles of water supply and distribution mains, nearly 1,800 hydrants and 3,800 gate valves. Seventy two percent of the distribution mains (24" diameter and smaller) are cast or ductile iron. Most of these are lined with cement mortar linings. The remaining 28% is asbestos cement pipe. The City of Kirkland's service lines within the distribution system are galvanized pipe, poly, or copper pipe with no lead service lines. The City of Kirkland has 6 sample stands that City of Seattle uses for routine coliform compliance monitoring.

Section 2.1d - Operational Responses to Non-Conforming Samples

Repeat samples must be collected whenever a sample is determined to be coliform positive. Within 24 hours of being informed by the laboratory of a coliform presence sample, repeat samples must be collected. One sample must be collected from the same sample site that the original coliform presence result came from. Plus, a sample must be taken from each of three repeat sites identified below. The original Routine sample sites and the three associated Repeat sample sites constitute a Sample Site Grouping. Due to the requirement for Repeat sample sites, Routine sampling at the source & the service connection farthest from the source should be avoided.

Selecting Sample Sites

After the Routine sampling site selection, 2 additional sites (Repeat sites) must be identified for each Routine site. Each of these sites is to be at a different service connection. Do not select the same site twice.

Select the following repeat sample locations::

- One repeat should be collected from the site with the original coli presence.
- Select one site within 5 service connections down the distribution pipeline in one direction, and
- Select a second site within 5 service connections down the distribution pipeline in the other direction.

Section 2.1d - Operational Responses to Non-Conforming Samples - continued

Sample Station Locations and repeat sample locations

City of Seattle #K1-1: N.E. 58th & Lake Wash. Blvd., S.E. Corner
Five service locations north 5918 Lake Wash. Blvd.
Five service locations south 5501 Lakeview Dr.

City of Seattle #K1-2: N.E. 120th and 100th Ave. N.E.
Five service locations to West 11920 - 100th Ave. N.E.
Five service locations to East 10241 N.E. 120th St.

City of Seattle #K1-3: 10th Ave and 8th St., N.W. corner
Five service locations to north 1129 - 8th St.
Five service locations to west 636 10th Ave.

City of Seattle #K1-4: N.E. 104th and 128th Ave. N.E.
Five service locations to north 10425 128th Ave. N.E.
Five service locations to east 12950 N.E. 104th

City of Seattle #K1-5: 122nd Ave. N.E. and N.E. 80th Place
Five service locations to north 8241 - 122nd Ave. N.E.
Five service locations to south 8008 - 122nd Ave. N.E.

City of Seattle K1-6: 130th Ave. N.E. and N.E. 70th Place
Five service locations to south 13013 N.E. 65th South Tank
Five service locations to west 12826 N.E. 70th Pl.

NOTE: Seattle currently takes 35 monthly samples from Kirkland at the above combined locations to conform with the regional monitoring plan.

Tank and Reservoir Cleaning Plan

TANK # (SIZE)	Address	Inspection /Cleaning
11.2 Mg	13013 N.E. 65th St.	Quarterly
14.3 Mg	10733 132nd Ave. N.E.	Quarterly

Section 2.1d - Operational Responses to Non-Conforming Samples - continued

Flushing Options

After unsatisfactory samples have been confirmed, it is best to thoroughly flush the suspect area before resampling. Take a chlorine residual before and immediately after flushing has taken place. If a low CL2 residual (below 0.3) is found, take appropriate measures to boost the chlorine in the system. Research recent activities within area of the bad sample, it is possible a cross-connection may have taken place, new construction or water draws may also cause problems. *Do not assume source water is contaminated.*

System Analysis

Analyze your system for possible problem areas before a MCL violation occurs. Dead end lines are potentials for low chlorine residuals as well as MCL violations. Valves that are turned down or off could cause dead water and flow problems. Tanks and reservoirs need to be cleaned and/or inspected on a yearly or as needed basis. A thorough knowledge of your water system will allow you to better understand what is happening when a violation takes place.

Sample Stand Cleaning Plan

The following is a listing of the items which would need to be addressed in a sample stand maintenance schedule:

1. Disinfect: Yearly or when a sample is positive for coliform.
2. Painting: Every three years or as needed.
3. Trim brush: Yearly or as needed.
4. Replace Valves: Inspect yearly and replace as needed.
5. Piping and hose: Inspect yearly and replace as needed.
6. Meter Box: Inspect yearly and clean as needed.

The following is a listing of the items which would need to be purchased to disinfect sample stands:

1. Garden Spray Pump
2. 5’ of Tygon Clear Plastic Tubing
3. 2 - Hose Clamps
4. Safety Glasses
5. CL2 Bleach (5 to 1 solution of water to bleach)

When disinfecting stand let water/bleach solution sit in stand for approximately 5-10 minutes.

Section 2.1d - Operational Responses to Non-Conforming Samples - continued

PRV/PUMP STATION LOCATIONS BY ZONE

Address	Size	Outlet Pressure Set
659		
13205 NE 85th	3”x2”	119
13205 NE 85th	8”	114
60-01 Apartments	3”	105
60-01 Apartments	8”	100
13013 NE 65th South Res.	3”	56
13013 NE 65th South Res.	6”	56
590		
NE 60 & 117th Ave	3”	48
NE 60 & 117th Ave	8”	42
NE 67th & 116th PL NE	3”	74
NE 67th & 116th PL NE	6”	69
545		
13202 NE 70th	3”	34
13202 NE 70th	12”x10”	30
140th Ave NE & NE 70th	8”	74
132nd Ave & NE 116th	3”	90
132nd Ave & NE 116th	10”	95
510		
NE 86th & 116th Ave NE	3”	112
NE 86th & 116th Ave NE	8”	108
450 North		
NE 100th & 111th Ave NE	4”x3”	70
NE 100th & 111th Ave NE	10”x8”	65
120th Ave NE & NE 85th	3”	74
120th Ave NE & NE 85th	8”	69
8554 122nd Ave NE	2”	70
8554 122nd Ave NE	6”	65
12800 NE 116th ST.	3”	83
12800 NE 116th ST.	10”	79

Section 2.1d - Operational Responses to Non-Conforming Samples - continued

PRV/PUMP STATION LOCATIONS BY ZONE- continued

450 South

Address	Size	Outlet Pressure Set
NE 45th & 110th Ave NE	3”	58
NE 45th & 110th Ave NE	6”	53
NE 60th & 111th PL NE	3”	54
NE 60th & 111th PL NE	6”	57
NE 60th & 111th Pl. NE	12”	50
NE 85th & 116th Ave NE	3”	100
NE 85th & 116th Ave NE	10”	94

395

12230 NE 116th St.	3”	95
12230 NE 116th St.	10”	87
127th Ave NE & NE 116th	3”	72
127th Ave NE & NE 116th	10”	66
11909 132nd PL NE	3”	35
11909 132nd PL NE	8”	30

315

7th Ave & 8th St.	8”	85
15th Ave & 6th St.	3”	62
15th Ave & 6th St.	10”	54
18th Ave & 1st St.	2”	52
18th Ave & 1st St.	6”	46

285 North

14th Ave W & 8th St. W	2”	80
14th Ave W & 8th St. W	4”	72
20th Ave W & Market	2”	62
20th Ave W & Market	4”	56
108th Ave NE & Forbes Creek Dr	2”	88
108th Ave NE & Forbes Creek Dr	8”	84
113th Ave NE & Forbes Creek Dr	2”	78
113th Ave NE & Forbes Creek Dr	8”	75
NE 116th & 104th Ave NE	3”	35
NE 116th & 104th Ave NE	10”	30
121st St. & 106th Ave NE	3”	44
121st St. & 106th Ave NE	6”	37

Section 2.1d - Operational Responses to Non-Conforming Samples - continued

PRV/PUMP STATION LOCATIONS BY ZONE- continued

285 South

Address	Size	Outlet Pressure Set
NE 38th & Railroad Tracks	2”	52
NE 38th & Railroad Tracks	8”	46
NE 52nd & 104th Ave NE	3”	49
NE 52nd & 104th Ave NE	10”	44
NE 68th & Railroad Tracks	3”	52
NE 68th & Railroad Tracks	8”	48
420 6th St. So	3”	50
420 6th St. So	8”	45
70th Ave & 2nd St.	3”	62
70th Ave & 2nd St.	8”	54
70th Ave & 8th St.	8”	73

Section 2.1d - Operational Responses to Non-Conforming Samples - continued

PRV RELIEF VALVES

Address	Size	PRESSURE SET
450 North		
NE 100th & 111th Ave NE	4”	60
450 South		
NE 45th & 110th Ave NE	4”	75
NE 60th & 111th Ave NE	4”	70
315		
18th Ave & 1st St.	4”	65
285 North		
18th Ave & 1st St.		
108th NE & Forbes Creek Dr	2”	105
113th Ave NE & Forest Creek Dr	2”	100
285th South		
NE 52nd & 104th Ave NE	4”	65
NE 64th & Lk Wash Blvd	4”	125
NE 68th & Railroad Tracks	4”	70
420 - 6th St. So	4”	64

PUMP STATION CONTROL VALVE

South Pump	
13013 NE 65th South Pump #1	6” Clay-Valve
13013 NE 65th South Pump #2	6” Clay-Valve
13013 NE 65th South Pump #3	6” Clay-Valve
13013 NE 65th South Pump #4	6” Clay-Valve
Supply Station #2	
13205 NE 85th St. Bail Valve	12” Pratt
13205 NE 85th St. Bail Valve	10” Pratt
13205 NE 85th St. for Pump #1	16” Pratt
13205 NE 85th St. for Pump #2	16” Pratt

Section 2.1e - Public Notification for Non-Compliance

KEY CONTACTS FOR UTILITY DECISIONS/RESPONSE

SEATTLE WATER DEPT. CONTACTS	PHONE NUMBER
Lynn Kirby	(206) 684-0216
Amy McNally	(206) 386-9786

NEWSPAPER CONTACTS	PHONE NUMBER
Seattle Times	(206) 464-2200
Seattle Post – Intelligencer (on-line only)	(206) 448-8030
Kirkland Reporter	(425) 822-9166

TELEVISION CONTACTS	PHONE NUMBER
King 5 (5)	(206) 448-5555
KSTW (11)	(206) 441-1111
KIRO (7)	(206) 728-8308
KOMO (4)	(206) 404-4145

RADIO CONTACTS	PHONE NUMBER
KIRO	(206) 726-5476
KOMO	(206) 404-5666

Response to the public to be made only after confirmation of a MCL violation with WDOH, Seattle Water Department and coordination with management of utility.

Non-Acute Violations (See Page # 1)

The City of Kirkland shall notify the water system users when the system has a non - acute MCL violation:

Notification may be by newspaper, mail, or hand delivery to all customers of the system. Notification to water system users must occur within 14 days of the violation.

Section 2.1e - Public Notification for Non-Compliance – continued

Notification to newspapers means publication in a daily newspaper of general circulation or in a weekly newspaper of general circulation if a daily newspaper does not serve the area. The purveyor may substitute a community or homeowner's association newsletter or similar periodical if the newsletter reaches all affected consumers within the specified time.

a. Mandatory language:
b. A clear concise and simple explanation of their violation:
c. Discussion of potential adverse health effects and any segment of the population that may be at a higher risk.
d. A list of steps the purveyor has taken or is planning to take to remedy the situation.
e. A list of steps the consumer should take, including advice on seeking an alternative water supply if necessary.
f. The purveyor's name and phone number.
g. When appropriate, notices shall be multi - lingual.
h. The purveyor may provide additional information to further the situation.

NOTE:
Copy of the violation must be sent to WDOH immediately.

Acute Violations - Radio/TV Notification (See Page # 2)

The purveyor shall notify the water users when the system has an acute MCL violation. The purveyor shall also contact DOH immediately.

The following steps must be taken to notify all utility customers of an acute MCL violation.

- Notice to radio and television stations serving the area within seventy-two hours of violation of an acute coliform positive sample is required.
- The purveyor will consider additional newspaper, mail, or hand delivery.

Section 2.1e - Public Notification for Non-Compliance - continued

Radio/TV Notification Within 24 Hours

See Appendix 1 for Public Notification Language.

Key Contacts for Interaction with DOH

CITY OF KIRKLAND KEY CONTACTS

NAME	PHONE NUMBER
Ray Steiger	425 587-3800
Greg Neumann	425 587-3910
Steve Ensminger	425 587-3905

SEATTLE WATER DEPARTMENT KEY CONTACTS

NAME	PHONE NUMBER
Lynn Kirby	(206) 684-0216
Wylie Harper	(206) 684-7880

DEPARTMENT OF HEALTH KEY CONTACTS

NAME	PHONE NUMBER
Paige Igoe	(253) 395-6764
After Hours	1-877-481-4901

Section 2.1f - Glossary of Terms

ACUTE - Posing an immediate risk to human health.

AWWA - American Water Works Association.

BIOFILM - Biological regrowth of bacterial or organic nature that can use up CL2.

COLIFORM - Are one of a group of microbiological contaminants regulated as part of the Safe Drinking Water Act (SDWA) written by the US Protection Agency (EPA). The many types of coliforms, including fecal coliforms, are usually not disease causing (pathogenic). However, their presence in drinking water indicates the potential presence of pathogens associated with waterborne disease outbreaks. In particular, the presence of fecal coliforms in drinking water indicates that an urgent public health problem may exist.

COLIFORM SAMPLE - A sample of water collected from the distribution system at or after the first service and analyzed for coliform presence.

CONTAMINANT - A substance present in drinking water which may adversely affect the health of the consumer or the aesthetic qualities of the water.

DISTRIBUTION SYSTEM - That portion of a public water system which conveys water from the source and/or treatment facilities to consumers.

DOH - Department of Health.

E.COLI - Fecal Coliform Bacteria.

EPA - Environmental Protection Agency.

MCL - Maximum Contaminant Level

NON-ACUTE - Posing a possible or less than immediate risk to human health.

NTNC - Non-Transient non-community.

POTABLE - Water suitable for drinking by the public.

PRV - Pressure reducing station.

Section 2.1f - Glossary of Terms – continued

PURVEYOR - Agency, subdivision of the state, municipal corporation, firm, company, mutual or cooperative association, institution, partnership, or person or other entity owning or operating a public water system. Purveyor also means authorized agents of such agencies.

REPEAT SAMPLE - A sample collected to confirm the results of a previous analysis.

ROUTINE SAMPLE - A sample collected on a monthly or regular basis, as part of the monitoring plan.

SAMPLE SITE - A designated site to collect samples for analysis.

SERVICE CONNECTION - A connection to a public water system designed to provide potable water to a single family residence, or other residential or non-residential population.

SOURCE - The origin of the water that the purveyor is receiving.

TURBID - Measurable indication of water clarity. High levels can indicate water quality problems.

TYPE A WATER SYSTEM - A public water system with fifteen or more service connections, regardless of the number of people; or serving an average of 25 or more people per day for sixty or more days within a calendar year, regardless of the number of service connections.

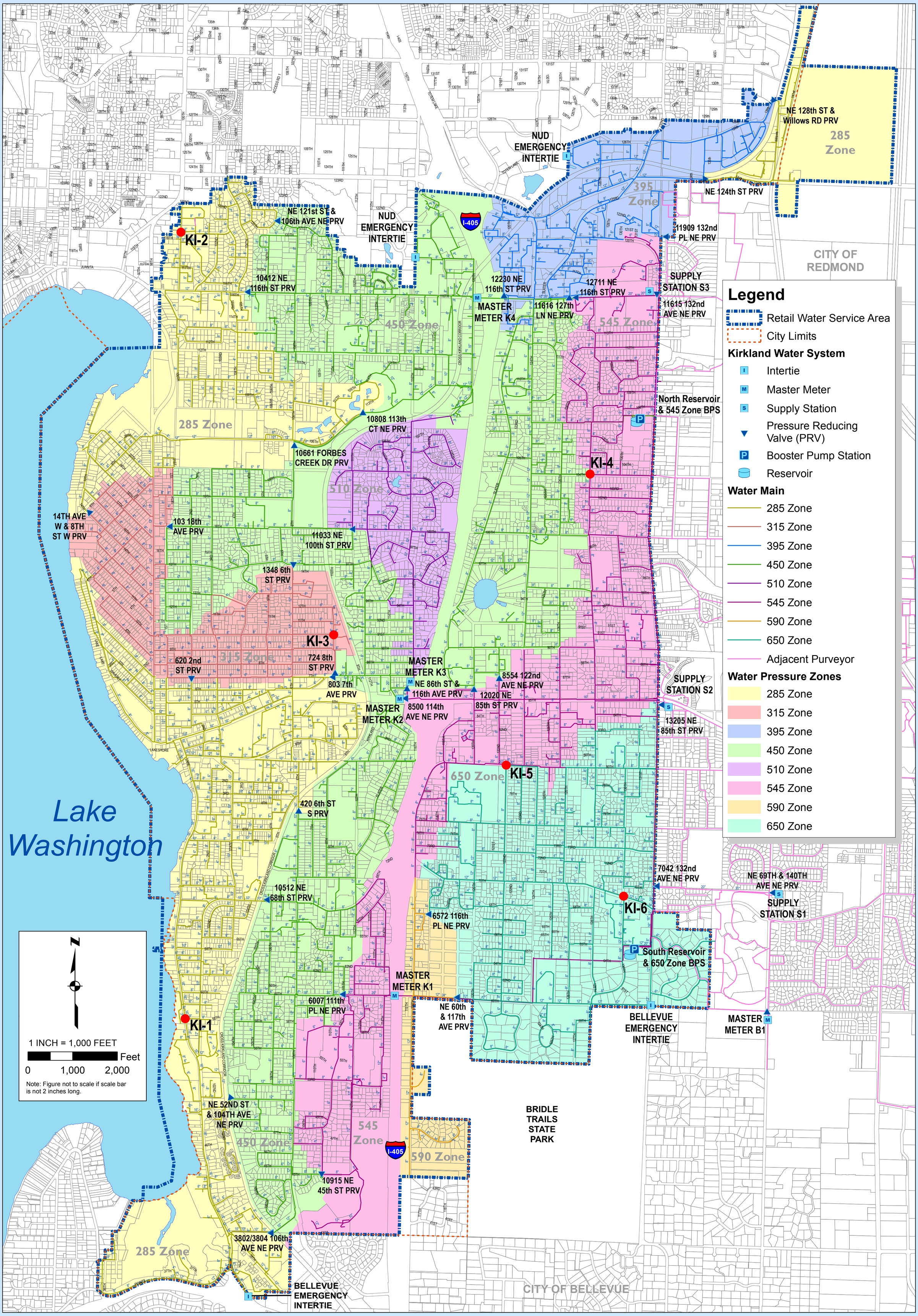

Figure 1

Coliform Monitoring Sites

City of Kirkland

2014 Comprehensive Water System Plan

Modified: February 24, 2015

J:\Data\Kir\112-051\CAD\GIS\maps\Coliform_Monitoring.mxd By: zschrempp

APPENDIX P

Consumer Confidence Report

2014 annual water Quality report

THE CITY OF KIRKLAND, WA · MAY 2014

Your Drinking Water Is Safe!

National Drinking Water Week is May 4-10th. The City of Kirkland's Water Division is here to ensure that you receive safe drinking water every time you turn on the tap. Annually, we take this opportunity to inform you about your drinking water. Ongoing testing in 2013 showed that your drinking water met or exceeded all state and federal drinking water standards. In compliance with the federal Safe Drinking Water Act and Washington State Department of Health requirements, we are sending this annual report, including testing results from 2013, to every water customer Kirkland serves. You have a right to know what is in your drinking water and where it comes from. In this report, you will find news about water sources, quality, and programs and projects intended to help you make well-educated decisions regarding the water you drink and to encourage you to consider the challenges of delivering safe drinking water. An extensive amount of information is provided in this report. We hope we have presented it in a user-friendly format, and that the topics are of interest to you. Please contact us if you would like help understanding the information provided, would like more information about your drinking water, or have suggestions for future reports. Our addresses and telephone numbers are located at the end of this report. Definitions of terms used can be found beneath the table on page 5.

Cascade Water Alliance

Deputy Mayor, Penny Sweet

Councilmember, Doreen Marchione

The City of Kirkland is a member of the Cascade Water Alliance (Cascade) along with Bellevue, Issaquah, Redmond, Sammamish Plateau Water and Sewer District, Skyway Water and Sewer District, and Tukwila. Cascade provides its members with safe, clean and reliable water in a cost effective and environmentally responsible manner. Cascade was formed in 1999 to provide you with water today… and tomorrow. Each member has a voice in determining its own community's future by ensuring the availability of water. City of Kirkland Councilmembers Penny Sweet and Doreen Marchione represent Kirkland on the Cascade board.

As an organization, Cascade also works closely with all water providers in the Central Puget Sound region ensuring every drop of available water is used BEFORE another drop is developed. For more information, visit www.cascadewater.org.

As a member of Cascade, Kirkland purchases its water from Seattle Public Utilities (SPU). The water is then distributed to Kirkland residents through Kirkland's water distribution system. SPU performs most of the sampling and treatment for Kirkland's drinking water. The Kirkland Water Division operates and maintains the system's water distribution lines, pump stations and storage reservoirs. ("Kirkland" and "SPU" will both be used in this report when referring to the water supply.)

Downtown Kirkland Water View from Lake Washington

Tolt Reservoir - photo courtesy of Seattle Public Utilities

Our Water Sources

Two watersheds, the South Fork Tolt River Watershed (13,390 acres) and the Cedar River Watershed (90,495 acres), supply all of Kirkland's water. These two surface water sources are located in remote, uninhabited areas of the Cascade Mountains. To protect the quality of our water SPU enforces an aggressive watershed protection plan. Kirkland's water usually comes from the Tolt River Watershed. On rare occasions, such as during summers with high water demands and low precipitation, the Tolt water is supplemented with water from the Cedar River Watershed. In 2013, Kirkland did not receive water from the Cedar River Watershed.

The Washington State Department of Health (DOH) conducted a source water assessment to determine potential contaminant sources and has determined that all surface water systems are considered highly susceptible to contamination. You can access the full report on Washington's Source Water Assessment Program (SWAP) at the Department of Health's website: www.doh.wa.gov/ehp/dw. Scroll down and click on Source Water Assessment.

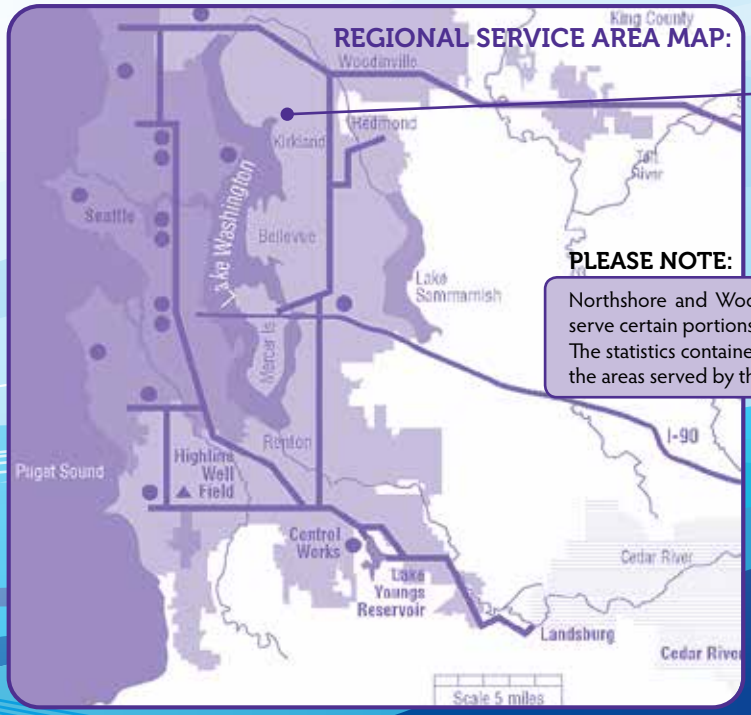

PLEASE NOTE:

Northshore and Woodinville Utility Districts serve certain portions of north Kirkland. The statistics contained herein do not include the areas served by those districts.

*Kirkland's Water System Facts

* Please note that certain portions of north Kirkland are served by the Northshore and Woodinville Utility Districts. These statistics do not include areas served by the districts.

- Square miles served = 9.8
- Population served = 40,112
- City of Kirkland Connections = 12,287
  - Single-family Residential = 10,284
  - Multi-family = 802
  - Commercial = 736
  - Irrigation systems = 465
- Average Water Usage (2013 data)
  - Entire System = 5.3 million gallons per day
- Record Water Usage = 16.2 million gallons (July 20, 1994)

KIRKLAND'S WATER FACILITIES

- Water Storage Capacity
  - North Reservoir (Mark Twain Park) = 14.3 million gallons
  - South Reservoir (Bridle Trails) = 11.5 million gallons
- Miles of Water Main (pipe) = 173.3
- Number of Fire Hydrants = 1,893
- Number of Pump Stations = 3
- Number of Pressure Control Stations = 36

UPGRADED

- During 2013, Kirkland Water crews replaced or repaired 91 water service lines.

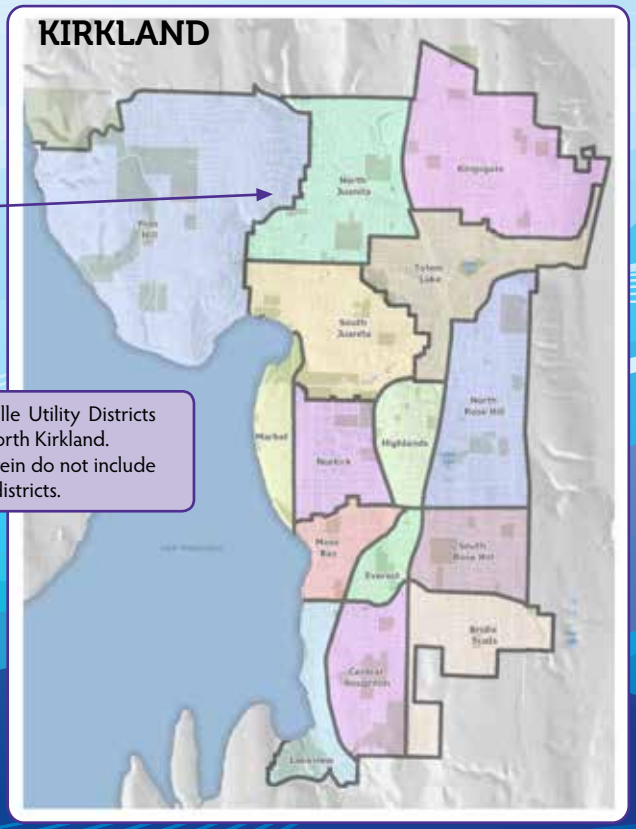

Water Treatment

The Tolt and Cedar water supplies are disinfected with chlorine, which destroys Giardia, bacteria, and viruses that may be present in the source water. Because our waters are naturally very soft, minerals (calcium oxide and sodium carbonate) are added to help inhibit corrosion in building plumbing systems. In accordance with a Seattle public vote held in November 1968, SPU also adds fluoride to the drinking water at appropriate levels to prevent tooth decay.

The Tolt supply is treated at a filtration and ozonation facility. Tolt filtration improves water quality to a level beyond what is required by current standards as well as satisfying increases in standards proposed for the future. It also allows the reservoir to be operated in all weather conditions (certain conditions used to render the river too muddy to be used at times) and produces additional water supply from the Tolt reservoir. The Cedar Treatment Facility is the largest facility in the United States to use ultra-violet light technology to disinfect drinking water. Details about SPU's planned capital improvements are available on their web site at www.seattle.gov and search for water system projects.

Tolt Treatment Facility
photo courtesy of Seattle Public Utilities

The Purpose of Disinfection, and the Resulting Disinfection By-products

Drinking water is disinfected to destroy bacteria, viruses, and Giardia. (Inadequate disinfection may lead to acute gastrointestinal illnesses.) However, as the disinfectant reacts with naturally occurring organic matter in the water, disinfection by-products are formed. Disinfection by-products have been linked to increased cancer risks from drinking water containing high levels (greater than the MCLs) over many years. New drinking water regulations provide a balance between required levels of disinfection and the resulting disinfection by-products. SPU's Tolt Filtration Plant improves Kirkland's ability to provide a higher level of microbial protection while maintaining or reducing disinfection by-product levels.

New Main Line Valve Installed by Water Division

Capital Improvement Program (CIP)

The City of Kirkland is constantly reviewing system hydraulics and statistics to determine long-term budgeting for replacement of old piping and to increase water capacity throughout the system. As an example, the City of Kirkland has a comprehensive meter change out program. This program is scheduled to replace an average of 10% of the City's water meters each year, based on the meter's age and usage. In addition, the City's Water System Comprehensive Plan, which includes capital improvement projects to repair aging and undersized water main pipes, fire hydrants, services and valves, is currently in the process of being updated and is expected to be finalized in late fall. In 2013, the City replaced or repaired 35 substandard fire hydrants and responded to 94 service requests to investigate "leaks" on the customer's side of the water meter. As part of our efforts on leak detection, in 2013, approximately 1,641 lineal feet of asbestos-cement water main was replaced with ductile iron pipe as well as valves, hydrants, and services. These projects are an integral piece of Kirkland's long-standing commitment to customer satisfaction and service. For the most up-to-date CIP information, please visit our web page at www.kirklandwa.gov or contact the Water Division at (425) 587-3910.

Water Quality Monitoring

SPU staff monitors water quality in the source water, treatment processes, and distribution system 365 days a year. Various compounds are monitored at specific frequencies (continuously, daily, monthly, quarterly, or annually) and locations (prior to treatment, entering the distribution system, and throughout the distribution system) in accordance with federal and state regulations. Many of these tests confirm the absence of various contaminants. Water quality monitoring conducted between January 1 and December 31, 2013 confirmed that there were no contaminants at or above established levels of concern for the general public. Please refer to the data tables in this report for more detailed information on water quality monitoring results.

The table titled 'Water Quality Monitoring Results' lists the contaminants detected in 2013 together with their concentrations and possible sources. The following paragraphs describe the significance of a few of these contaminants. Some tests are not required every year; for these tests, the concentrations listed are the results of the most recent testing. If you would like a copy of the list of contaminants that are monitored but were not detected in Kirkland's water, please call (425) 587-3910.

Information on the Potential for Health Concerns Relating to Drinking Water

The sources of all drinking water (both tap water and bottled water) include rivers, lakes, streams, ponds, reservoirs, springs, and wells. As water travels over the surface of the land or through the ground, it dissolves naturally occurring minerals and can pick up substances resulting from the presence of animals or human activity.

Drinking water, including bottled water, may reasonably be expected to contain at least small amounts of some contaminants. The presence of contaminants does not necessarily indicate that water poses a health risk. More information about contaminants and potential health effects can be obtained by calling the Environmental Protection Agency's (EPA's) Safe Drinking Water Hotline (800) 426-4791, or from EPA's Office of Ground Water and Drinking Water web site at www.epa.gov/safewater/hotline.

MCLs are set at very stringent levels. To understand the possible health effects described for many regulated constituents, a person would have to drink 2 liters of water every day at the MCL level for a lifetime to have a one-in-a-million chance of having the described health effect. Some people may be more vulnerable to contaminants in drinking water than the general population. Immuno-compromised persons such as persons with cancer undergoing chemotherapy, persons who have undergone organ transplants, people with HIV/AIDS or other immune system disorders, some elderly, and infants can be particularly at risk for infections. These people should seek advice about drinking water from their health care providers. EPA/CDC (Environmental Protection Agency/ Center for Disease Control) guidelines on appropriate ways to lessen the risk of infection by Cryptosporidium and other microbial contaminants are available from the Safe Drinking Water Hotline (800) 426-4791, and on EPA's web site.

In Kirkland's water supplies, these potential contaminants and their sources include:

POTENTIAL CONTAMINANT	SOURCE
Microbial	Viruses and bacteria from wildlife
Inorganic	Salts and metals which are naturally occurring
Pesticides and herbicides	Agriculture,urban stormwater runoff, residential
Organic	By-products of disinfection processes
Radioactive	Naturally occurring

To ensure that tap water is safe to drink, EPA adopts regulations setting the water quality standards for public water systems. The federal Food and Drug Administration regulates contaminants in bottled water and is responsible for providing the same level of public health protection.

Water Clarity

Turbidity, a measure of water's clarity, has no direct health effect but indicates the overall quality of the water. High turbidity can reduce the effectiveness of disinfection. Turbidity may indicate the presence of disease-causing organisms. These organisms include bacteria, viruses, and parasites that can cause symptoms such as nausea, cramps, diarrhea, and associated headaches. SPU's source waters have very low turbidity. The unit of measurement for turbidity is the NTU (nephelometric turbidity unit). SPU monitors source water turbidity continuously on both the Tolt and the Cedar supply. For each month in 2013, 100% of the treated samples from the Tolt Treatment Facility were below 0.3 NTU.

2013 Water Quality Monitoring Results: THIS IS WHAT IS IN YOUR TAP WATER

DETECTED COMPOUNDS	Tolt Supply		This level or less is ideal	This much is allowed	Is your water safe?	Typical Sources
	AVERAGE	RANGE	MCLG*	MCL*	Compliant?	
Total Organic Carbon, ppm	1.3	1.2 - 1.4	NA	TT	YES	Naturally present in the environment
Cryptosporidium, #/100L	<1	ND-2	NA	NA	YES	Naturally present in the environment
Total Coliform, # of positive samples	Highest Month = 0 of 36 samples Annual Number = 0 of 431 samples		0	1/month	YES	Naturally present in the environment
CLARITY (Measured After Treatment)						
Turbidity, NTU	0.06	0.04 - 0.14	NA	TT	YES	Soil runoff
INORGANIC AND ORGANIC PARAMETERS (Measured After Treatment)						
Fluoride, ppm	0.8	0.7 - 0.9	4	4	YES	Water additive that promotes strong teeth (our target is 1 mg/L)
Barium, ppb	1.9	(one sample)	2000	2000	YES	Erosion of natural deposits
Bromate, ppb	ND	ND	0	10	YES	By-product of drinking water disinfection
Nitrate, ppm	0.13	(one sample)	10	10	YES	Erosion of natural deposits
Cadmium, ppb	0.35	(one sample)	5	5	YES	Erosion of natural deposits
DISINFECTANTS and DISINFECTION BY-PRODUCTS (Measured in the Distribution System)						
Total Trihalomethanes, ppb	34	21.2-46.7	NA	80	YES	By-product of drinking water chlorination
Haloacetic Acids (HAA), ppb	25	17.3-40.8	NA	60	YES	By-product of drinking water chlorination
Chlorine, ppm	Highest monthly average = 1.05	0.25-1.46	MRDLG = 4	MRDL = 4	YES	Water additive used to control microbes

Definitions

The following definitions are provided to help you better understand any unfamiliar terms and abbreviations included in the above table:

- **Maximum Contaminant Level (MCL):** The highest level of a contaminant that is allowed in drinking water. MCLs are set as close to the MCLGs as feasible using the best available treatment technology.
- **Maximum Contaminant Level Goal (MCLG):** The level of a contaminant in drinking water below which there is no known or expected risk to health. MCLGs allow for a margin of safety.
- **Maximum Residual Disinfectant Level (MRDL):** The highest level of a disinfectant allowed in drinking water. There is convincing evidence that addition of a disinfectant is necessary for control of microbial contaminants.
- **Maximum Residual Disinfectant Level Goal (MRDLG):** The level of a drinking water disinfectant below which there is no known or expected risk to health. MRDLGs do not reflect the benefits of the use of disinfectants to control microbial contaminants.
- **Treatment Technique (TT):** A required process intended to reduce the level of a contaminant in drinking water.
- **Nephelometric Turbidity Unit (NTU)**: Turbidity is a measure of how clear the water looks. The turbidity MCL that applied to the Tolt was 0.3 NTU for at least 95% of the samples in a month. 100% of the samples from the Tolt in 2013 were below 0.3 NTU.
- **Action Level (AL):** The concentration of a contaminant, which, if exceeded, triggers treatment, or other requirements, which a water system must follow.
- **NA:** Not Applicable
- **ND:** Not Detected at or above the minimum reporting level - laboratory analysis indicates that the constituent is not present.
- **1 mg/L** = 1000 µg/L

For water samples:

- **1 part per million (ppm)** = 1 mg/L (corresponds to one minute in two years or a single penny in $10,000)
- **1 part per billion (ppb)** = 1 µg/L (corresponds to one minute in 2,000 years, or a single penny in $10,000,000)
- **1ppm = 1000 ppb**

Cryptosporidium

Cryptosporidium parvum is a protozoan pathogen (disease-causing organism) commonly found in the natural environment. Most rivers and streams across the country have detectable concentrations of this pathogen. In SPU's surface water sources Cryptosporidium sources include deer, elk, and voles in the watersheds. The ozonation disinfection method at the Tolt Filtration Plant is very effective at destroying Cryptosporidium and other microbial organisms. SPU monitored for Cryptosporidium in the source water (prior to treatment). Cryptosporidium samples are not required to be collected from the Tolt supply due to removal and inactivation of Cryptosporidium by the Tolt Filtration Plant; however, SPU began collecting samples in 2005. Cryptosporidium was detected in one of the 4 samples collected in 2013 for the Tolt.

Residential Tap Monitoring for Lead and Copper

Our source waters do **not** contain lead or copper. However, lead and copper can leach into residential water from building plumbing systems containing copper plumbing, lead-based solder, brass fixtures, or some types of zinc coatings used on galvanized pipes and fittings (individual water services, not water mains). Homes built or plumbed with copper pipe prior to the 1985 King County lead solder ban would have likely used lead-based solder, and are considered "high risk" under EPA's criteria. Brass fixtures, regardless of age, generally contain some lead. Metals can leach into building plumbing systems when the water is stagnant in the pipes for extended periods of time (six hours or greater).

By regulation, lead and copper monitoring is conducted at "high risk" homes. Samples are collected from these homes after the water is allowed to stand in the pipes overnight. We are required to report the "90th percentile" result of the testing. This means that 90 percent of the high-risk homes have concentrations less than the reported value and 10 percent have concentrations higher than the reported value. Lead and copper monitoring was conducted most recently in 2001 and were both at or below the action levels. The next sampling round will be in 2014. Compliance is determined on a regional basis.

LEAD AND COPPER MONITORING RESULTS (TOLT)

			City of Kirkland – Tolt Water		
Parameter & Units	**MCLG**	**Action Level+**	**2011 Results***	**# homes exceeding action level**	**Source**
Lead, ppb	0	15	6	0 of 53 (10%)	Corrosion of household plumbing systems
Copper, ppm	1.3	1.3	0.16	0 of 53	

*90th Percentile: i.e. 90 percent of the samples were less than the values shown.
+The concentration of a contaminant which, if exceeded, triggers treatment or other requirements which a water system must follow.

Infants and young children are typically more vulnerable to lead in drinking water than the general population. It is possible that lead levels at your home may be higher than at other homes in the community as a result of materials used in your home's plumbing. If you are concerned about elevated lead levels in your home's water, you may wish to have your water tested and flush your tap for 30 seconds to 2 minutes before using tap water. Additional information is available from the Safe Drinking Water Hotline (800) 426-4791.

If present, elevated levels of lead can cause serious health problems, especially for pregnant women and young children. Lead in drinking water is primarily from materials and components associated with service lines and home plumbing. The City of Kirkland is responsible for providing high quality drinking water, but cannot control the variety of materials used in plumbing components. When your water has been sitting for several hours, you can minimize the potential for lead exposure by flushing your tap for 30 seconds to two minutes before using water for drinking or cooking. If you are concerned about lead in your water, you may wish to have your water tested. Information on lead in drinking water, testing methods, and steps you can take to minimize exposure is available from the Safe Drinking Water Hotline or at www.epa.gov/safewater/lead.

Additional Water Quality Sampling

SPU monitors several parameters in the interest of our customers. The following table lists the water quality information most frequently requested.

PARAMETER & UNITS	TOLT SUPPLY
Alkalinity, Total (as $CaCO_3$), ppm	20.5
Calcium, (as $CaCO_3$), ppm	26.0
Hardness, (as $CaCO_3$), ppm	27.3
Hardness, (as $CaCO_3$), grains/gal.	1.6
Iron, ppb	43
Manganese, ppb	2.2
pH, range (January–July 2013, 10-90th percentile)	8.12-8.57
Potassium, ppm	0.12
Sodium, ppm	1.02
Sulfate, ppm	2.8
Temperature, 2013 annual range,C°	3.8-20.6

Note: abbreviation definitions available on page 5

Frequently Asked Questions

How can I get more involved in decisions affecting my drinking water?

Please contact the Water Division at the telephone number or e-mail address listed at the end of this report with any questions, suggestions or concerns. Water-related issues are often presented to Kirkland City Council; the public is welcome to attend council meetings. To determine the Kirkland City Council's meeting schedule and/or topics to be discussed, call (425) 587-3197. Information regarding Washington State legislation is available at www.leg.wa.gov/legislature.

What causes tastes and odors, and what are some remedies?

Most of the taste and odor complaints that SPU receives are about chlorine or the earthy, musty taste caused by blue-green algae that grow naturally in SPU's source waters. This algae is not harmful to your health. Chilling the water or adding lemon to the water can reduce taste and odor problems. The filtration and ozonation facilities on the Tolt supply eliminated taste and odor problems from that source.

How can I learn ways to conserve water?

In partnership with the Cascade Water Alliance, Kirkland has a variety of programs to conserve this vital natural resource and stabilize or reduce your water bill. For more information, please contact the Water Division (425) 587-3907.

Who can I contact regarding my utility bill, permits, emergencies, etc.?

- Billing or Consumption Records/Questions - Customer Accounts (425) 587-3150
- General Drinking Water Questions - Water Division (425) 587-3910
- WATER EMERGENCIES
  - Monday – Friday, normal business hours – Water Division (425) 587-3910
  - After-hours/Holidays – Maintenance Center (425) 587-3900
- To Report Illegal Fire Hydrant Use – Water Division (425) 587-3910
- Plumbing Permits – Building Department (425) 587-3600
- Capital Improvement Projects – Capital Projects Manager (425) 587-3833

How can I get more water quality information?

City of Kirkland web site ..... www.kirklandwa.gov
City of Kirkland Water Division e-mail ..... gneumann@kirklandwa.gov
(Greg Neumann, Water Division Manager)
City of Kirkland telephone number ..... (425) 587-3900
City of Kirkland address ..... 123 Fifth Avenue
Kirkland, WA 98033

Washington Department of Health -
Drinking Water web site ..... www.doh.wa.gov/ehp/dw
U.S. Environmental Protection Agency web site ..... www.epa.gov/safewater/hotline
EPA Safe Drinking Water Hotline ..... (800) 426-4791

This material can be made available to accommodate people with disabilities at the City of Kirkland's TTY telephone number (425) 587-3111.

2014 annual water Quality report

The City of Kirkland Public Works Dept.
123 5th Avenue · Kirkland, WA 98033

Printed on Recycled Paper

PRESORT
STANDARD
PAID
Permit No. 268
Kirkland, WA

Water Use Efficiency Rule – Report to customers

The 2003 Municipal Water Law (HB1338) aimed at addressing the increasing demand on our state's water resources, set planning requirements, leakage standards and water conservation goal setting and reporting requirements. The City of Kirkland underwent a public process in January of 2008 and adopted the conservation goal based on Kirkland's portion of Cascade's regional goal. The adopted goal was to achieve 88,000 gallons per day (gpd) in savings by the end of the six year (2008-2013) water conservation program. This translates to an average of 14,000 gpd of new savings each year. During 2013, Kirkland achieved a savings of 24,222 gpd.

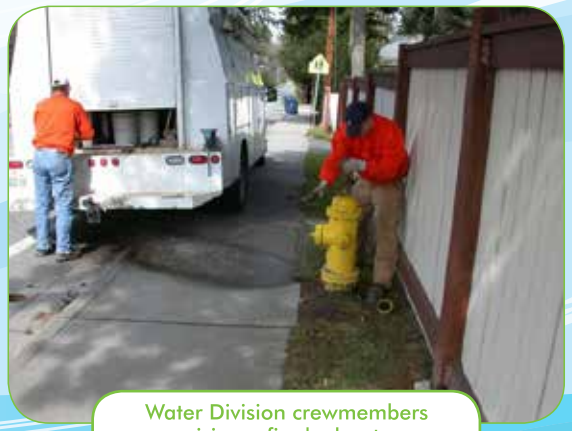

Water Division crewmembers exercising a fire hydrant

The Cascade programs for Kirkland includes outreach, gardening classes, classroom education, rebates toward the purchase of water conserving appliances and hardware (urinals, ice machines, irrigation systems), and distribution of showerhead and faucet aerators as well as toilet leak detection tablets. For more information, visit www.cascadewater.org.

Saving water is always a good thing to do.
Not only does it help to preserve the environment for us and future generations, you may also see a reduction in your water and sewer bills. If you have questions on how you can save water or take advantage of rebates, please contact the Water Divison at **(425) 587-3907** or visit **www.cascadewater.org**.

APPENDIX Q

Seismic Vulnerability Analysis and Earthquake Response Plan

City of Kirkland

Seismic Vulnerability Analysis and Earthquake Response Plan

SEISMIC VULNERABILITY ANALYSIS

Introduction

The City of Kirkland is located in the Puget Sound Basin, a tectonic lowland that extends from the Willamette Basin in Oregon northward to the Straight of Georgia and Vancouver, British Columbia. The Puget Sound Basin has formed due to stresses along the western margin of the North American Plate, a great block of the earth's crust that is slowly drifting westward. The accumulation of stress in the crust, and the resulting folding and faulting which formed the basin occur because the westward drift of the continental plate is opposed by the eastward motion of the portion of the oceanic crust called the Juan de Fuca Plate. The collision of these two great masses of rock or plates has resulted in the formation of the Cascadia Subduction Zone where the heavier oceanic crust slides beneath the Puget Sound Region and the Cascade Mountains. This collision has resulted in the uplift and vulcanism of the Cascade Range, the down-dropping of the Puget Sound Basin, the raising of the Olympic Range, and numerous earthquakes when brittle rocks suddenly break to relieve the accumulating stress.

Seismologists detect an average of about three earthquakes per day in the Puget Sound Region and on about a twenty-five year cycle major earthquakes (Richter magnitudes of 6.5 to 7.5) have historically occurred. The two most recent severe subduction zone earthquakes are the 1949 Olympia earthquake (7.1 Richter magnitude) and the 1965 Tacoma earthquake (6.8 Richter magnitude). About ten years ago, studies of drowned forests and wetlands in coastal regions of Washington and Oregon revealed that much larger (Richter magnitude 8.0 to 9.0) deep earthquakes have occurred in the region at a recurrence interval of about 750 to 1,250 years. However, the geologic record of these earthquakes indicates that it will most likely be several hundred years before another truly devastating earthquake of this origin shakes the region.

Of significant new concern are data reported in the past few years that indicate another type of seismic activity occurring in the near surface environment is possible in the immediate vicinity of Kirkland. Studies by Bucknam, et al, (1992), Johnson, (1993), Yount and Holmes, (1992), Johnson, (1994 in press), indicate that the Newcastle Hills and Squawk Mountain have been thrust upward by north/south compression within the Puget Sound Basin. Preliminary studies of deformation of sediments in Lake Washington and Puget Sound near Alki Point indicate the folding and breaking of sediments is occurring in the near surface environment and that this tectonic activity has been persistent during the last ten thousand years. Based on the recurrence interval of subduction zone earthquakes, Kirkland's risk of experiencing a magnitude 6.5 or greater earthquake is very high during the next ten years. The new information about the thrust faulting adds an additional reason

for careful planning.

Seismic Hazards

A brief discussion of seismic loads is included to help readers understand possible seismic effects on different components of Kirkland's water system.

Most above-grade structures are designed with gravity and wind loads in mind. These are both very different from seismic loads. Gravity is static (constant) and one directional (downward). Seismic loads, on the other hand, are dynamic (changing) and multidirectional (mainly lateral, but ground faulting and landslides can cause vertical loads as well). Seismic loads can produce ground motion and vertical faulting, imposing many different types of loads on structures: shear, torsion, and tension, and compression loads from bending. They can cause loads from any direction at any number of different frequencies. The results can be uplift and undermining of foundations, sliding or overturning of entire structures, or small local failures. Seismic loads can affect both underground and above ground structures.

Although more similar to wind loads than to gravity loads, seismic loads are unique. Wind exerts forces against above ground portions of the structure. The structure's weight (inertia) helps it to resist movement, keeping the structure relatively undeformed. The greater the structure's height, the lower its stresses when subjected to wind loads. An earthquake, on the other hand, introduces ground movement, taking with it the structure's foundation. The weight (inertia) of the structure tends to hold the top portion of the structure at rest. In this case, however, the result is structural deformation, which often causes very high stresses in the structure. As ground shaking continues, foundations continue to move, causing resulting sway in the above ground structure. Progressive damage to the structure, and interactive effects between the earthquake's frequency and the structure's characteristic frequency, such as resonance, can be complicated and sometimes disastrous.

To summarize, it is important to realize that tall, heavy structures, such as reservoirs, are very vulnerable to seismic loads. In addition, a reservoir's performance in severe windstorms is not a good predictor of its performance in an earthquake. Another very important point to remember is that the effects of an earthquake are also far more widespread than those of most other types of loadings. Events that must be considered in an earthquake include:

- Structural, mechanical, or electrical damage to nearly any component in the water system.
- Fire, resulting from electrical shorts or explosion.
- Flooding, due to damaged water retention structures.
- Landslides.
- Loss or contamination of water supply.

- Loss of power.
- Loss or impairment of transportation, due to bridge failure, fallen trees or power lines, flooding, or other causes.
- Loss of telephone service.
- Loss of sewer, gas, and other utilities.

Facility Assessment

A seismic event could affect nearly any component of Kirkland's water system, from source to user. Storage and distribution facilities are particularly vulnerable.

Kirkland's water system components will be discussed in four parts: sources, booster pump stations, storage facilities, and distribution lines. Likelihood and reasons for damage, and additional hazards from loss of facilities will be covered.

Sources

The City of Kirkland receives all of its water from the City of Seattle through three separate metered supply stations. Each of the three supply stations is essentially a below-grade vault containing a control valve. They are located near the eastern edge of Kirkland's service area at NE 69th Street and 140th Avenue NE, NE 85th Street and 132nd Avenue NE, and NE 116th Street and 132nd Avenue NE.

The City of Seattle serves all three of Kirkland's supply stations with water primarily from the Tolt Eastside Supply Line. The Tolt pipeline is a large diameter, older supply line that is located above grade in many places, and even suspended in some locations, and is therefore seismically vulnerable.

In the event of an emergency, Kirkland has a manually-operated intertie at Northup Way between Kirkland's 285 Zone and the City of Bellevue's 400 Zone. However, this emergency intertie only benefits a portion of Kirkland's overall system.

Booster Pump Stations

The City of Kirkland owns and actively operates only one booster pump station for normal supply, the 650 Zone Booster Pump Station. It is a partially above-grade concrete structure located at the South Reservoir site. Its function is to supply the 650 Pressure Zone from the 545 Pressure Zone when the City of Seattle supply drops below a hydraulic elevation of 650 feet, which is typically during the spring and summer. This booster pump station has emergency power in the form of a diesel engine generator set.

Several seismically-associated events could interrupt the booster pump station operation. A power outage is highly likely following a moderate to large earthquake, as is the loss of communications, which include Kirkland's telemetry system. In addition, damage to the pumps, motors, and piping is possible, even though they are secured to the floor.

Reservoirs

The City of Kirkland has two water storage facilities, the 11.2 MG South Reservoir, located at approximately NE 65th Street and 130th Avenue NE, and the 14.3 MG North Reservoir, located at approximately NE 107th Street and 131st Avenue NE. Both are above-grade steel tanks.

The 11.2 MG South Reservoir is approximately 50 feet tall (water height), with a diameter of 195 feet and was constructed in 1971. It has a cone style roof with interior roof framing and interior pipe columns. The tank is unanchored and has above-grade inlet/outlet piping at three locations near the tank base.

In February of 1994, a seismic evaluation of the South Reservoir was performed by KPFF Consulting Engineers. KPFF concluded that the tank was in conformance with AWWA D100-84 and the 1991 Uniform Building Code. However, KPFF noted seismic vulnerability due to seismic water loading at the tank roof. KPFF therefore recommended that: 1) flexible couplings be added to the tank's exterior piping; and 2) the water level in the tank be lowered to four feet below the tank overflow elevation. Recommendation 1, the addition of flexible couplings, was recently completed. The Rose Hill Water District engineer did not recommend that the tank level be limited to a maximum elevation of four feet below the overflow, based on the assumption that damage to the tank roof could be tolerated in a seismic event and was not likely to be catastrophic. However, the level of the tank is usually more than four feet below the overflow during normal operation. No mention was made, however, about the potential for damage to the tank base due to seismic loading of the tank roof. Unanchored tanks which are proportionately wide and short can experience severe sloshing wave action during an earthquake. In some cases, the forces of these waves can lift the edge of the unanchored tank completely off the ground, slamming that portion of the tank down with very high compressive loads when it is returned to grade level. This can cause buckling of the tank shell at the base of the reservoir, often called "elephant's foot buckling," due to its characteristic outwardly deflected shape at the base, and can sometimes cause tank failure and loss of tank contents at that point. Elephant's foot buckling can be avoided by either keeping the water elevation low enough to avoid loading the roof in an earthquake, as KPFF has recommended, or by adding tank anchors to prevent uplift.

The 14.3 MG North Reservoir is approximately 103 feet tall (water height), with a diameter of 154 feet, and was constructed in 1994. This tank has a self-supporting roof, with no interior roof framing or columns, is anchored to its foundation, and has flexible piping connections at the tank foundation. A June 24, 1994, letter to the City of Kirkland from Stack, Chambers & Porter indicates that it was designed and constructed in conformance with AWWA D100 and the 1991 Uniform Building Code, with the tank foundation designed and constructed to meet the requirements of UBC Seismic Zone 4 (one zone greater than required by the code).

Reservoirs that are properly designed and located can be the most important components of the City's water system for seismic response. Widespread power outages are the norm rather than the exception in a moderate to large earthquake. This often incapacitates wells and booster pump stations. In many areas, storage reservoirs have been the sole source of fire fighting and drinking water supply for 72 or more hours following an earthquake.

As distribution line leaks and breaks are common in an earthquake, close proximity of storage to customers is a distinct advantage. For best reliability, a large number of smaller, well-located, well-designed, and anchored reservoirs are most advantageous.

Another critical reason for reservoirs to be well-designed and anchored is the danger that they pose to nearby residents. A reservoir collapse could clearly be a fatal accident. However, even a slowly leaking reservoir (perhaps from damage to inlet/outlet piping) can cause structural undermining, flooding, and landslides. These occurrences add to the danger that the lack of fire fighting capacity and safe drinking water would impose.

As described earlier, reservoirs in general, because of their often large above-grade mass, are particularly prone to earthquake damage. Unique characteristics that affect the seismic vulnerability of Kirkland's reservoirs include the following:

1. Kirkland has only two large reservoirs. Thus, if one reservoir were damaged, a significant amount of storage would be lost. Furthermore, if the South Reservoir and Seattle supply were out of service, water supply to the City's 545, 590, and 650 Zones would be dependent on the availability of power to operate the pump at the North Reservoir site.

2. Both reservoirs are located near the eastern edge of the service area. Poor proximity to customers in the west and southwest portions of the service area increases the chances that these customers could have disrupted or lost water supply due to main breaks.

3. The South Reservoir would be vulnerable to damage at the roof and base of the shell during an earthquake, if the level in the reservoir is near the overflow elevation.

Transmission and Distribution Lines

Ground faulting, settlement, slides, and possible liquefaction will most certainly cause damage to Kirkland's transmission and distribution lines in a significant earthquake. Unfortunately, an investigation of all transmission lines to determine seismic vulnerability is not practical. In addition, the location of an earthquake's epicenter can strongly impact which lines are damaged (Piping is more likely to be damaged by loading along the axis of the pipe than from the side).

A few of Kirkland's distribution mains deserve special note. These mains are either vulnerable large mains or single source of supply mains to an area. Loss of these water mains could seriously impair fire fighting capabilities or cause substantial water loss. They should be checked for major leaks and breaks after an earthquake and should be given high priority status for repairs.

The three major transmission mains which carry water to the western portion of Kirkland's service area are:

1. The 20-inch diameter ductile iron transmission main located in NE 60th Street from approximately 116th Avenue NE to 110th Avenue NE. This main was constructed in 1971.

2. The 16-inch diameter concrete cylinder transmission main located in NE 85th Street from approximately 132nd Avenue NE to 116th Avenue NE. This main was constructed in 1960.

3. The 20-inch diameter ductile iron transmission main located in NE 116th Street from approximately 132nd Avenue NE to 120th Avenue NE. This main was constructed in 1969.

An 8-inch distribution main provides the only transmission of water to the 510 Pressure Zone. A portion of this main was constructed in 1970 of asbestos cement, which is particularly susceptible to seismic damage. The remainder was constructed in 1943 of cast iron, which is also brittle and susceptible to seismic damage.

Transmission and distribution line leaks and breaks can be identified by checking the telemetry system for unusual pressures, calling customers in the vicinity of the suspected leak or break, and/or visually checking for signs of leakage.

Other Facilities

Other potential sources of vulnerability, include water contamination, which could potentially occur to supply water before reaching Kirkland's supply stations, or could possibly occur from rupture of below grade fuel storage tanks or other sources. The City's hard-wired telemetry system is vulnerable to several seismic related activities such as ground faulting, settlement, and slides.

Recommendations

Additional System Assessment

It is advisable that Kirkland have a licensed structural engineer perform periodic inspection of its water facilities. In particular, it is important to assess critical components, such as large supply sources and large transmission mains, and high risk components, including reservoirs.

Safety Preparations

Both staff and customers should be provided with emergency instructions following an earthquake. Critical staff members should be given emergency radios to allow them to communicate with other staff members if transportation systems and telephone lines are severed or restricted. Other staff members should be instructed to call in, if possible, or automatically report to work following an emergency to help re-establish emergency fire flows and drinking water

supplies. It is also important that at least two areas be fully equipped centers for emergency response. Each should be provided with all necessary information for emergency response. This includes but is not limited to: current water system maps and plans, lists of emergency contacts for service personnel, parts, and equipment, City and King County officials, and various media sources. It is critical that reliable emergency communication be available to the staff to make possible and/or expedite emergency functions of the City. It may be necessary to have separate radio channels for fire, police, and public works.

Since it is very likely that both power and telephone service will be incapacitated in an earthquake, customers should be provided with emergency instructions in advance of the event of water supply loss. This could be in the form of a billing insert or separate mailer. Power outages would prevent boiling of water for purification at most households. Alternative methods should be explained and described in sufficient detail with emergency instructions. Other necessary information might include volume and type of emergency food and water to store and other items customers should have on hand, such as a fire extinguisher, battery operated radio, first aid kit, flashlight, and wrench for turning off gas or water mains, if necessary. Directions for the aftermath of the earthquake should cover how and when to shut off gas, water mains, and electricity, and where to go for emergency medical services, food, water, and shelter.

Capital Improvements

The following capital improvements can be made to reduce Kirkland's water system vulnerability in an earthquake:

1. The water level in the South Reservoir may be maintained at a level in conformance with recommendations from KPFF's February 16, 1994, letter, or, alternatively, seismic anchors may be added at the tank base to reduce the risk of damage to the tank roof and base of the tank shell.

2. Add redundant transmission mains or alternative supply capability to supplement the following critical supply mains or improve the reliability of the mains:

   a. 20-inch main crossing I-405 at NE 60th Street.
   b. 16-inch main crossing I-405 at NE 85th Street.
   c. 20-inch main crossing I-405 at NE 116th Street.
   d. 8-inch main that supplies water to the 510 Zone.

3. Provide adequate anchorage and structural support in all three orthogonal directions for equipment at all supply stations and at the booster pump station.

4. Emergency water treatment supplies should be kept on hand in the event of an emergency.

5. Provide pumping from the North Reservoir to the 545 Zone in the event that the South Reservoir is out of service.

6. Upgrade the hard-wired telemetry system to a radio-based telemetry system which is more reliable in an earthquake.

Future Design Criteria

Redundancy and reliability are critical throughout all parts of the water system, including sources, storage, and distribution. The following factors should be considered in future designs for minimizing Kirkland's seismic vulnerability:

Reservoirs: Flexible piping connections and adequate anchorage.

Distribution System: Ductile iron piping generally performs much better in an earthquake than more brittle materials, such as asbestos cement and cast iron. Frequent and well-located isolation valves are beneficial in preventing water loss due to leaks or breaks. Buried piping usually performs better than above-grade piping. Back pressure sustaining valves in pressure reducing stations reduce "draining" of upper pressure zones and subsequent low pressures when main breaks occur downstream of pressure reducing stations.

Telemetry: Radio telemetry is more reliable in an earthquake than hard-wire telemetry, which is vulnerable to ground faulting, settlement, slides, and underground construction activities, all common during or following earthquakes.

Power: Backup power to pump stations and other critical electrically powered facilities, including emergency response stations, etc. is often critical. Power loss is the norm rather than the exception in a large earthquake.

EARTHQUAKE RESPONSE PLAN

If maintenance personnel are on-site during an earthquake, they should immediately report major facility damage to the Operations and Maintenance Manager or Water Supervisor (either by telephone, if possible, or by radio).

The Operations and Maintenance Manager or Water Supervisor will be responsible for assessing water system damage following an earthquake and for communicating with and coordinating efforts with Kirkland's Public Works, Engineering, or other emergency services divisions, such as fire and police. Although the Public Works Department must be responsible for its own emergency functions, it also has a primary responsibility to respond to the cooperative request of the City's other emergency services. In the event of an earthquake, it may be necessary for the Public Works Department to delay some steps of their emergency response, such as post-quake facility inspection, to assist fire, police, or other departments with more urgent tasks. Following an earthquake, the Water System Seismic Response Plan should be carried out with a degree of flexibility. It should be modified or expanded, depending upon the situation, to suit interactive department needs and administrative judgment.

INSTRUCTIONS FOR THE WATER SYSTEMS SEISMIC RESPONSE PLAN (To be implemented by the Operations and Maintenance Manager)

1. Obtain a preliminary estimate of major facility damage. Check telemetry monitors (for unusual changes in pressure or flow rates, etc.) and call municipal personnel or customers, if necessary, to determine the number of facilities affected and extent of damage.

2. Based on the information gathered in Step 1, evaluate the magnitude of the emergency. Is this a major emergency which will affect other groups of people or customers? Evaluation should be based upon the number of people affected and severity of the effect. Impairment of fire fighting ability must be considered an emergency.

3. Call appropriate personnel based on Step 2. If the situation is deemed a major emergency, contact the Public Works Director, Engineering Department, and fire, police, or other City administrators as necessary to coordinate a cooperative response within the City and possibly the surrounding area. At this time, additional staff should be called to work if necessary. Also at this time, any critical water users, such as medical facilities and dialysis patients, must be contacted if they will be affected. It may also be appropriate to contact heavy water users to enlist their help in achieving temporary water conservation, order a water tank truck for emergency drinking water supplies, arrange for other delivery of bottled water, and activate emergency intertie supply, if necessary.

4. Turn off appropriate components to prevent further damage (Steps 3 and 4 may be interchangeable or simultaneous).

5. Operate surviving facilities (at extra capacity if necessary) to provide water and fill reservoirs. Use emergency treatment as necessary--chlorine may be needed. Carefully monitor water quality and quantity throughout the system.

6. Immediately have staff respond to known present or imminent disasters and hazards not remedied by Step 3. This may involve cooperative efforts with other City or County departments. DO NOT send out staff to respond to all problems as they are reported. More severe emergencies may be discovered soon after. Use staff wisely.

7. While first contacted staff are responding to known problems and hazards, contact additional staff for a more comprehensive water system inspection and repair.

8. Have staff perform a brief primary inspection of facilities, initiating responses to urgent problems as they arise (for example closing off severed mains and evacuating dangerous areas). Many of these facilities may be evaluated, at least for preliminary purposes, on the bases of telemetry data (pressures and flow rates) and customer responses. The following facilities should be examined first:

a. Facilities which are seismically vulnerable and likely to cause greater damage by failure including:

   1) All reservoirs.
   2) Supply sources.

b. Critical transmission and distribution lines:

   1) 20-inch main crossing I-405 at NE 60th Street.
   2) 16-inch main crossing I-405 at NE 85th Street.
   3) 20-inch main crossing I-405 at NE 116th Street.
   4) 8-inch main that supplies water to the 510 Zone.

c. Fire and contamination hazards:

   1) Any known fuel storage tanks.

d. Supply to critical customers:

   1) Supply to schools and other potential emergency shelters.
   2) Supply to medical and emergency facilities, including fire and police stations, and other critical customers, including dialysis patients.
   3) Supply to governmental and administrative facilities, including City Hall and police stations.

9. As facility damage is discovered and evaluated, water maintenance staff should respond in order of:

   a. Threat to life within the City of Kirkland, prioritizing by number affected and severity or potential severity of injury. Adequate fire flow and safe drinking water supply are a primary concern.

   b. Severe threat to property within Kirkland, again prioritizing by number of people affected and severity of damage.

   c. Threat to life safety and severe property damage to neighboring communities.

   d. Repairs to reinstate basic City functions (to allow people to return to their homes and schools, etc.).

   e. Repairs to reinstate normal, pre-earthquake functioning of the City, meeting peak daily flow rates, etc. Steps 9.d. and 9.e. may follow or be concurrent with Step 10.

10. In the days and weeks following a major earthquake, water system facilities should be more thoroughly inspected for damage.

APPENDIX R

O&M Forms and DOH Notices

AIR RELIEF MAINTENANCE RECORDS

Asset Number: _____

Map Page: _____ **MFGR: _____**

Address: _____ **Size of Air Vac: _____**

Location: _____ **Size of Service: _____**

Zone: _____ **Model #_____**

Access (type of enclosure): _____ **# of Flange Bolts_____**

Remarks: _____

_____

_____

_____

_____

Maintenance Completed

Date:_____ Comments:_____

_____ Employee: _____

Date:_____ Comments:_____

_____ Employee: _____

Date:_____ Comments:_____

_____ Employee: _____

Date:_____ Comments:_____

_____ Employee: _____

Date:_____ Comments:_____

_____ Employee: _____

CITY OF KIRKLAND REQUISITION WORKSHEET

123 Fifth Avenue, Kirkland, WA 98033 425.828.1117

DATA ENTRY USE ONLY	
REQUISITION NO.	PURCHASE ORDER NO.

DEPARTMENT/DIVISION: **Public Works/Water**	REQUESTED BY:	DATE:
FORWARD TO PURCHASING: ☐ YES ☐ NO	PRICE IS: ☐ QUOTED ☐ ESTIMATED	MSDS REQUIRED? ☐ YES ☐ NO	DATE REQUIRED:

SUGGESTED VENDORS:

I.D. NO.	NAME	ADDRESS	CITY	STATE	ZIP	CONTACT	PHONE

ITEM #	QTY.	UNIT COST	UNIT	TOTAL PRICE	ACCOUNT		DESCRIPTION
					Org Key 411	Object	
					JL Key	Object	
					Org Key	Object	
					JL Key	Object	
					Org Key	Object	
					JL Key	Object	
					Org Key	Object	
					JL Key	Object	
					Org Key	Object	
					JL Key	Object	
					Org Key	Object	
					JL Key	Object	

COMMENTS:

DATA ENTRY USE ONLY		
ENTERED BY:	DATE ENTERED:	SHIP TO KEY:

I hereby certify that the articles or services requested above are necessary to conduct the activities of this department, and are authorized by budgetary or other ordinance action.

			Approval	Date

Blow Off Exercising **Map #_____** **Activity - 510**

Date	Crew	Asset Number	Operated (Y/N)	Flushed (Y/N)	Address	Size	Comments Additional Work?	Date Entered

Employee__________________		Information	Hours Worked Section						Signature:						Date:			
Date	Address	Work	Equip #		Mains	Layout	Valves	Services	Meters	Meter/ Box	F.H	Joint	Drop	Locates	Service	Other	OT	CT
		Description w/ Count		Hours	(Repair)	(Serv)	(Repair)	(Repaired)	(Reading)	(Repl)	(Repair)	Use	In		Requests	(MTG	HRS	HRS
					(New)	(Main)	(Exerc.)	(Repl)	(Dispatch)	(Leaks)	(Exerc.)				(PSI)	(Train)		
									(Off/On)	(Raise)	(Raise)				(W. Quality)	(etc)		

Employee__________________ **Information** **Hours Section**

Date	Address	Work	Equip #	Mains	Layout	Valves	Services	Services	Meter	F.H	FH	Meter	Main	Joint	Hansen	Drop	Equip	Inventory	Locates
		Description w/ Count		Repair	Mains		Repaired	Repl.	Maint.	Repair	Cons	Reading	Cons	Use		Ins	Maint		
										Exerc.									

Employee_____

Information			Hours Worked Section													
Date	Address	Work	Equip #	Mains	Layout	Valves	Services	Meters	Meter/ Box	F.H	Joint	Drop	Locates	Service	Hansen	Other
		Description w/ Count	Hours	(Repair)	(Serv)	(Repair)	(Repaired)	Reading	(Repl)	(Repair)	Use	In		Requests		(Mtg)
				(New)	(Main)	Exerc.	(Repl)	(Dispatch)	(Leaks)	(Exerc.)				(PSI)		(Train)
								(Off/On)	(Raise)	(Raise)				(W. Quality)		(Etc.)

Daily Materials Usage Totals (Water Division)

Date: _____

Address: _____

Crew: _____

5/8 Crushed/Other Material: _____

Activity: _____

Load 1: _____

Load 2: _____

Load 3: _____

Load 4: _____

Load 5: _____

Load 6: _____

Load 7: _____

Load 8: _____

Load 9: _____

Load 10: _____

Total Loaded _____

Total Returned _____

Total Used _____

Debris

Load 1: _____

Load 2: _____

Load 3: _____

Load 4: _____

Load 5: _____

Load 6: _____

Load 7: _____

Load 8: _____

Load 9: _____

Load 10: _____

Total _____

Easy Street

Load 1: _____

Total Loaded _____

Total Returned _____

Total Used _____

Additional Materials

Load 1: _____

Total Loaded _____

Total Returned _____

Total Used _____

CITY OF KIRKLAND
Department of Finance & Administration
123 5th AVENUE
(425) 587-3150 (425) 587-3110 Fax
utilitybilling@kirklandwa.gov

*Deduct meter readings must be faxed or emailed bimonthly to the City of Kirkland Customer Accounts Division on the **15th** of the month to (425) 587-3110 or utilitybilling@kirklandwa.gov.*

EXEMPT/DEDUCT METER READINGS

PREMISE: _____ **ACCOUNT:** _____

ADDRESS: _____ **CONTACT:**_____

METER SERIAL #: _____ **PHONE #:**_____

DATE	READING *(Please include all six digits on face of meter)*	INITIALS

If you have questions regarding how to read your meter, please visit www.kirklandwa.gov and enter "how to read meter" in the search box.

FIRE HYDRANT WEEDEATING LIST

STREET	LOCATION	FIRST TIME	SECOND TIME
NE 70th St	From 131st Ave to the Freeway	4/28/14	
NE 60th St	From 116th Ave to 132nd Ave	4/28/14	
132ND Ave NE	NE 60th St to Slater Ave NE	4/29/14	
Slater Ave NE	From NE 116th St to NE 124th St	4/29/14	
Slater Ave NE	From NE 97th St to NE 124th St	4/29/14	
124th Ave NE	From NE 80th St to NE 124th St	4/29/14	
NE 116th St	From 98th Ave NE to 120th Ave NE	5/1/14	
NE 112th St	From 98th Ave NE to 120th Ave NE	5/1/14	
108th Ave NE	From NE 41st Dr to NE 68th St		
NE 68TH st	Hydrant valve Laurel Park Apts.	5/1/14	
116th Ave NE	From NE 44th St to NE 80th St	5/2/14	
124th Ave NE	From NE 60th St to NE 80th St	5/2/14	
NE 60TH St & 114th Ave NE	Under freeway foot bridge	4/30/14	
NE 86th St & 116th Ave NE	End of cul-de-sac, behind guard rail & DO PRV VAULT	5/2/14	
15th Ave & 6th St	Prv 4” relief outfall “Blue”	5/2/14	
NE 38th PRV		5/2/14	
Lk wa Vo-tec	20” valve by trail	4/29/14	

10801 120th NE	510 zone valve over bank in back	5/2/14	
12633 NE 90th St	Hydrant	5/1/14	
120th Ave NE/NE 90th	Hydrant	5/1/14	
NE 38th /Trail	4 valves on the trail	5/2/14	
Lk WA Blvd	All of it	5/2/14	
Lk Ave W	3 hydrants	5/2/14	
Willows & RR tracks	PRV pit	4/29/14	

ATTENTION HOUGHTON COURT RESIDENTS:

The City of Kirkland Water Division will be working at the intersection of NE 68th and 106th Ave NE on Friday, August 20th beginning 4:00am and ending approximately 8:00am. You should not experience any interruption with your water service. We apologize in advance for the noise and any other inconvenience. Please call Steve with the Water Division at (425) 587-3905 with questions.

Hydrant Repair Form **Map #** _____ **Activity - 520**

Date	Crew	Hydrant Number	Address	Comments - Work Needed	Date Complete

City of Kirkland
Hydrant Meter Use

Tran Code 2028

Amount:-
_____

Receipt:_____

Site Address/Location: _____

Customer Name: _____

Phone # _____ Meter Size:_____

Billing Address: _____

_____ SEC#

_____

This hydrant meter will be used solely at the designated address or location above, and only for the use of water for construction purposes. Before using the meter, the customer needs to provide a double check valve and give a copy of a certified test to the Construction Inspector. A hydrant wrench (also provided by the customer) must be used on the hydrant and onsite when the meter is delivered.

The fire hydrant being used for the meter is to remain clear of all debris and construction material at all times so that Water and/or Fire Department personnel may access the hydrant if needed.

Any hose attached to the meter by the customer is not to be laid across any traveled roadway.

The meter is to be removed from the hydrant on a daily basis.

The water consumption and monthly rental will be billed upon return of the meter.

When the final billing on the hydrant meter is paid, the deposit will be released.

Please note that the protection of the meter from damage, including freezing, is the customer's responsibility. **If the meter is damaged, a charge for replacement of the meter will be added to the final bill.**

If the meter is lost or stolen, there will be no refund of the initial deposit.

_____
Customer signature

.....*Area below for Water Division use*.....

Meter Number: _____*Manufacturer:*_____

Meter Location: _____

Water Rate per 100 cf: _____ *Monthly Rental Fee:*_____

Date	*Beg Read*	*Date*	*End Read*	*Cons*	*Wtr Chrg*		*Rental Fee*	*Date Billed*	
	Amt	*Date Paid*							

Date Notified Inspectors of Meter # : _____*by whom:*_____

Date Meter Returned to Maintenance Center: _____

Date Meter Deposit Returned to Customer: _____

Hydrant Painting Log **Map Page** **Activity - 523**

Date	Crew	Hydrant Number	Completed (Y/N)	Any Additional Maintenance Needed?	Data Entered - X

September 1, 2005

Resident

Kirkland, WA 98033

Dear Resident:

Our crews were out performing maintenance on a fire hydrant by your home recently and found it difficult to access due to the overgrown bushes around it. We request that you trim this area so that Public Works and Fire Department personnel can access the hydrant.

In accordance with Section 903 and 1001 of the 1997 edition of the Uniform Fire Code adopted by the City of Kirkland (Chapter 21.32, Kirkland Municipal Code), the Fire Department requires that all hydrants installed in the City of Kirkland shall be installed and maintained in accordance with the following policy.

There shall be no less than 36" (inches) of horizontal clearance on all sides of the hydrant. All fire hydrants are to be free of obstacles in order that the fire hydrant may be seen by approaching fire trucks for at least 200' (feet). Posts, fences, vehicles, growth, trash, storage and other materials or things shall not be placed or kept near fire hydrants in a manner that would prevent the hydrants from being immediately discernable. The Fire Department shall not be deterred or hindered from gaining immediate access to the hydrants.

Please have the needed landscape maintenance completed by September 15, 2005. If you are unable to undertake this maintenance, the City will take steps necessary to eliminate the obstruction. To help ensure that any work done conforms to your preferences, we encourage you to do the maintenance yourself.

Thank you for your help in this matter. If you have any questions, please feel free to contact me at 425-587-3910.

Sincerely,

Public Works Department

Greg Neumann
Water Division Manager

METER READER TIME SHEET

NAME _____ Signature _____ Date _____

Date	Address	Work Elements	Quantity	Hours	Equipment Used	Equipment Hours
		Read				
		Dispatches				
		Itron				
		Delinquent Notices				
		Shut Off/On				
		Meetings				
		Other				

Date	Address	Work Elements	Quantity	Hours	Used	Hours
		Read				
		Dispatches				
		Itron				
		Delinquent Notices				
		Shut Off/On				
		Meetings				
		Other				

Date	Address	Work Elements	Quantity	Hours	Used	Hours
		Read				
		Dispatches				
		Itron				
		Delinquent Notices				
		Shut Off/On				
		Meetings				
		Other				

Date	Address	Work Elements	Quantity	Hours	Used	Hours
		Read				
		Dispatches				
		Itron				
		Delinquent Notices				
		Shut Off/On				
		Meetings				
		Other				

Date	Address	Work Elements	Quantity	Hours	Used	Hours
		Read				
		Dispatches				
		Itron				
		Delinquent Notices				
		Shut Off/On				
		Meetings				
		Other				

September 1, 2005

Resident

Kirkland, WA 98033

Dear Resident:

Our crews were out performing routine maintenance on the meter box for your home recently and found it difficult to access due to the overgrown plantings around it. We request that you trim and/or remove the plants around your meter box so that Water Division personnel can access the meter.

In accordance with section 15.16.080 of the Kirkland Municipal Code (KMC) it states:

It is unlawful for any person owning or occupying any premises served by the city water system to permit the accumulation of dirt, debris, landscaping materials or vegetation over or around the water service meter, or to in any other manner obstruct physical or visual access to the meter for either repair, inspection or reading.

If following ten days' notice from the city to do so, any such owner or occupant has failed to remove any landscaping, dirt, debris or other material or objects which obstruct the meter reader's ability to read, inspect or repair the meter, then the city may cause to have such clearing work accomplished, and the cost therefore will appear on the water bill at the next regular billing period…

Please have the needed landscape maintenance completed by September 15, 2005. If you are unable to undertake this maintenance, the City will take steps necessary to eliminate the obstruction. To help ensure that any work done conforms to your preferences, we encourage you to do the maintenance yourself.

Thank you for your help in this matter. If you have any questions, please feel free to contact me at 425-587-3910.

Sincerely,

Public Works Department

Greg Neumann
Water Division Manager

NOTICE OF
NECESSARY NIGHT WORK
FOR WATER MAIN REPAIR

FROM _____

UNTIL _____

AT _____

DATE _____

SORRY FOR THE NOISE INCONVENIENCE

THANK YOU

YOUR WATER DEPARTMENT

CITY OF KIRKLAND
123 5TH AVENUE
425-587-3905

Office Hours: 6:30AM to 3:00PM

PRV MAINTENANCE CHECKLIST

285 SOUTH ZONE		
NE 38TH RR	**LAST RE-BUILD**	**TODAY'S DATE**
3"		
8"		
420 6TH ST SOUTH	**LAST RE-BUILD**	**TODAY'S DATE**
3"		
8"		
4" Relief		
NE 68TH RR	**LAST RE-BUILD**	**TODAY'S DATE**
3"		
8"		
4" Relief		
NE 52ND & 104TH AVE NE	**LAST RE-BUILD**	**TODAY'S DATE**
3"		
10"		
4" Relief		
7TH AVE & 2ND ST	**LAST RE-BUILD**	**TODAY'S DATE**
3"		
8"		
7TH AVE & 8TH ST	**LAST RE-BUILD**	**TODAY'S DATE**
3"		
8"		

285 NORTH ZONE		
14TH AVE W & 8TH ST W	**LAST RE-BUILD**	**TODAY'S DATE**
3"		
6"		
4" Relief		
108TH AVE & FORBES CR DR	**LAST RE-BUILD**	**TODAY'S DATE**
8"		
2"		
2" Relief		
113TH CT NE & FORBES CR DR	**LAST RE-BUILD**	**TODAY'S DATE**
2"		
8"		
2" Relief		
NE 116TH ST & 104TH AVE NE	**LAST RE-BUILD**	**TODAY'S DATE**
3"		
10"		
NE 121ST ST & 106TH AVE NE	**LAST RE-BUILD**	**TODAY'S DATE**
3"		
6"		
4" Relief		

285 NORTH EAST ZONE (REDMOND)		
Railroad and Willows	**LAST RE-BUILD**	**TODAY'S DATE**
3"		
8"		

13400 NE 124th ST	LAST RE-BUILT	TODAY'S DATE
3"		
10"		
3" Relief		

315 ZONE		
7TH AVE & 8TH ST	**LAST RE-BUILD**	**TODAY'S DATE**
3"		
8"		
18TH AVE & 1ST ST	**LAST RE-BUILD**	**TODAY'S DATE**
3"		
6"		
4" Relief		
15TH AVE & 6TH ST	**LAST RE-BUILD**	**TODAY'S DATE**
3"		
8"		
4" Relief		

395 ZONE		
DANIA	**LAST RE-BUILD**	**TODAY'S DATE**
3"	12/17/12	
10"	12/17/12	
127TH AVE NE & NE 116TH ST	**LAST RE-BUILD**	**TODAY'S DATE**
4"		

10”		
11909 132ND PL NE	**LAST RE-BUILD**	**TODAY’S DATE**
3”		
8”		

450 ZONE WEST		
NE 85TH ST & 116TH AVE NE	**LAST RE-BUILD**	**TODAY’S DATE**
4”		
6”		
10”		
12800 BLOCK OF NE 116TH ST	**LAST RE-BUILD**	**TODAY’S DATE**
3”		
10”		
4” Relief		
120TH AVE NE & NORTH OF NE 85TH ST	**LAST RE-BUILD**	**TODAY’S DATE**
3”		
8”		
8554 122ND AVE NE – T-2	**LAST RE-BUILD**	**TODAY’S DATE**
2”		
6”		
NE 45TH ST & 110TH AVE NE	**LAST RE-BUILD**	**TODAY’S DATE**
3”		
6”		
4” Relief		
NE 60TH ST & 111TH PL NE	**LAST RE-BUILD**	**TODAY’S DATE**
3”		
6”		
12”		

4” Relief		
NE 100TH ST & 111TH AVE NE	**LAST RE-BUILD**	**TODAY’S DATE**
3”		
8”		
4” Relief		

510 ZONE		
NE 86TH & 116TH AVE NE	**LAST RE-BUILD**	**TODAY’S DATE**
8”		
3”		

545 ZONE		
132ND AVE NE & NE 116TH – S-3	**LAST RE-BUILD**	**TODAY’S DATE**
3”		
10”		
13205 NE 85TH ST – S-2	**LAST RE-BUILD**	**TODAY’S DATE**
12”		
10”		
140TH AVE NE NORTH OF NE 70TH ST	**LAST RE-BUILD**	**TODAY’S DATE**
8”		
13202 NE 70TH ST	**LAST RE-BUILD**	**TODAY’S DATE**
3”		
10”		

590 ZONE		
NE 67TH ST & 116TH PL NE	**LAST RE-BUILD**	**TODAY'S DATE**
2"		
4"		

NE 60TH ST & approx. 117th AVE NE	**LAST RE-BUILD**	**TODAY'S DATE**
3"		
8"		

650 ZONE		
60-01 CONDOs IN REDMOND	**LAST RE-BUILD**	**TODAY'S DATE**
3"		
8"		
13205 NE 85TH ST – S-2	**LAST RE-BUILD**	**TODAY'S DATE**
4"		
8"		
SOUTH RES RELIEF	**LAST RE-BUILD**	**TODAY'S DATE**
4"		

RELIEF VALVES		
1820 9TH ST W	**LAST RE-BUILD**	**TODAY'S DATE**
4"		

NORTH TANK		
NE 108TH ST & 132ND AVE NE	**LAST RE-BUILD**	**TODAY'S DATE**
12"		
12" ALTITUDE		
6" RELIEF		

RELIEF VALVES

RELIEF VALVE #:

MAP PAGE:

STATION LOCATION:

STATION ADDRESS:

MANUFACTURER:

SIZE:

ZONE TO BE RELIEVED:

ELEVATION:

CRL SET AT PSI:

DOWNSTREAM ZONE PRESSURE:

BONNET BOLT SIZE:

SPRING RANGE:

DATE	MAINTENANCE	CREW

Valve Exercising **Grid #_____** **Activity - 522**

Date	Crew	Valve Number	Operated (Y/N)	Comments - Work Needed (Address)	Date Completed	Data Entered - X

WATER FILL STATION USE PERMIT

DATE OF APPLICATION: _____

DATE PERMIT APPROVED: _____

APPLICANT / COMPANY NAME: _____

APPLICANT ADDRESS: _____ PHONE: _____

CITY: _____ STATE: _____ ZIP: _____

Will water be mixed with fertilizers, pesticides or other potentially hazardous chemicals?
YES: ☐ NO: ☐ If yes, what chemical? _____

Cross Connection Control- Double Check ☐ Air Gap ☐

NOTE: Double Check requires proof of current Backflow Certification Test

Type of Business (eg. Construction, Hydroseed, Sweeping): _____

Estimated Tank Volume: _____

FILL STATION USE INSTRUCTED BY: _____

PERMIT APPROVED BY: _____

NOTE: This permit is non transferable and applies for fill station use only.
Applicant shall furnish the City of Kirkland with a monthly accounting of each use of the fill station by identifying the date and start and stop meter readings.
Station Location: 915 – 8th Street, Kirkland.

Water Fee: Current water rate is **$5.80** per 100 cubic feet (750 gallons). (**2014 Rates**)

Mail water usage sheet to:

City of Kirkland
Public Works Maintenance Center
Attn: Water Division
123 – 5th Avenue
Kirkland, WA 98033
Fax: 425-587-3902

Water Main Breaks

Date	Location	Zone	Size & Type	Comment

Water Division Work Order

Project No:	Employee write up :	Date

Address

Water Division Activity Code:

Comments/Description of work:

Water Main	Size	Material	PSI	Water Serv	Farside	Short	Size

Work Complete Y N Date Completed_____

Labor Charges				**Equipment Charges**			
Employee ID	Hours	Employee ID	Hours	Equipment #	Hours	Equipment #	Hours

Materials Used

Number of Parts	Part Number	**Remove from Inventory**
		(reason in comments)

Customer Name :

Phone Number :

Safety Equipment Needed?

Traffic Control Needed?

Hansen Work Codes for Water Division

Mains and Valves

488	Pothole Main
490	Prep Main
493	Main - Check Leak
500	Main Repair
501	Flushing
502	Shut Down
503	Fill/Construction
504	Mainline Valve Abandonment
505	Relief Valve Maintenance
506	Pump Control Valve Maintenance
507	PRV Maintenance
508	Inline Gate Valve Maintenance
509	Valve Box Maintenance (Mainline)
510	Blow Off Repair
511	Air Vac Maintenance
513	Valve Repair/Replacement (Mainline)
514	Install Valve Markers
522	Valve Exercising (Mains)
530	New Main Installation
536	Mainline Valve Box - Replacement

Hydrants

492	Hydrant - Prep
520	Hydrant - Repair
521	Hydrant - Replace
523	Hydrant - Painting
524	Raise Hydrant
525	Exercise Hydrant
533	Raise Foot Valve Box/Clean
534	Repair/Replace Foot Valve
535	Replace Foot Valve Box
538	Hydrant Trim

Backflow

460	Investigation
470	Crew Discovery
480	Follow Up
481	Turn On/Off
482	Customer Request
483	Testing
496	Tags

Services

491	Prep Service
512	Service Repair/Replacement
400	General Service Request
405	Check Pressure/Flow
495	Check Leak
782	Water Quality
519	Service Abandonment

Meters

450	Edit
494	Exempt Meter Inspection
497	Temporary Meter In Box
498	Hydrant Meter
499	Replace Meter Box
515	Meter Change Out
516	Meter Pull for Demo
517	Meter Box Adjustment
518	Meter Disconnect for Demo
526	Meter Reading
527	Delinquent Notice (Tags)
528	Turn On/Off
531	Meter Drop In
532	Itron Data Transfer
537	Meter Box Trim

Joint

540	Reservoir Cleaning
541	Reservoir Landscaping
542	PRV Maintenance
543	Mains/Valves Maintenance
544	Master Meter Reading
545	Master Meter Repair
546	Master Meter Testing
547	Telemetry Analysis
548	Telemetry Repair
549	Telemetry Calibration
550	Pump/Supply Station Inspec.
551	Pump Repair
552	Pump/Supply Landscaping
553	Pump/Supply Other
554	VA Inspection - Access
555	South Rosehill Building - Maint.

Misc Codes

489	Pre Job Set-Up
420	Lead & Copper Sampling
430	Sample Stands
440	Mapping - Record Drawings
574	Locating
597	Drug Test

Misc Codes

586	Work for Others
588	Shop Time
589	Equip. Maintenance
590	Inventory
598	Misc.
595	Meeting

Misc Codes

587	OT
591	Vac/Hol
592	SL
593	Injury
594	Training
596	Comp

Washington State Department of Health
Division of Environmental Health
Office of Drinking Water

PUBLIC NOTICE CERTIFICATION
Acute Coliform MCL

Within 10 days of notifying your customers, you must send a copy of each type of notice you distribute (hand-delivered notices, press releases, newspaper articles, etc.) to our regional office. Also, complete and send this form, which certifies that you have met all the public notification requirements. If the boil water advisory remains in effect more than three months, you must notify your water users again and provide another Public Notice Certification to us. *With this certification, you are also stating that you will meet future requirements for notifying new billing units of the violation or situation.*

Water System:_____ID #_____County:_____

Violation Date:_____ / _____ / _____ Violation Type:_____

This public water system certifies that public notice has been given to water users, following state and federal requirements for delivery, content, and deadlines.

Complete the following items:

Yes No

☐ ☐ Distribution was completed on ___ / ___ /____. Check all that apply:
- ☐ Hand delivery,
- ☐ Press release (TV, radio, newspaper, etc.),
- ☐ Posting at_____ (by DOH approval only),
- ☐ Other _____ (by DOH approval only).

☐ ☐ Were the water users notified within 24 hours?

_____ _____ _____
Signature of owner or operator Position Date

If you need this publication in an alternate format, call (800) 525-0127 or for TTY/TDD call (877) 833-6341.

Northwest Regional Office:
20435 72nd Ave S Suite 200
Kent WA 98032
(253) 395-6775
Fax: (253) 395-6760

Southwest Regional Office:
PO Box 47823
Olympia WA 98504-7823
(360) 236-3030
Fax (360) 664-8058

Eastern Regional Office:
16201 E Indiana Ave Suite 1500
Spokane Valley WA 99216
(509) 329-2100
Fax: (509) 329-2104

NOTICE TO WATER SYSTEM USERS
ANNUAL NITRATE MONITORING VIOLATION FORM

We, _____ Water System, I.D. _____, located in _____County are required to monitor your drinking water for specific contaminants on a regular basis. Results of regular monitoring are an indicator of whether or not your drinking water meets health standards. During _____, we did not monitor or test for nitrate, and therefore cannot be sure of the quality of your drinking water during that time.

At this time:

☐ No action is required by the users.

☐ Our routine nitrate sample required for _____ *(current year)* has been collected.

☐ Samples will be collected in the future as required.

☐ Other information for customers:

For more information, please contact _____ at ( )___-_____ or at _____.
(owner or operator) (phone number) (address)

Please share this information with all the other people who drink this water, especially those who may not have received this notice directly (for example, people in apartments, nursing homes, schools, and businesses.) You can do this by posting this notice in a public place or distributing copies by hand or mail.

This notice is sent to you by _____ Water System on __/__/__

Annual Nitrate Monitoring Public Notice Certification Form

(This section must be completed by Water System. Signature below indicates notice contained all required elements.)

Complete the following items (check all that apply):

Washington State Department of Health
Division of Environmental Health
Office of Drinking Water

☐ Notice mailed to all water customers on ____ / ____/____.

☐ Notice hand delivered to all water customers on ___ / ___ /___.

☐ Notice published in newspaper (attach copy)

☐ Notice posted at _____ on ___ / ___ / ____.
(***By Department Approval Only***)

_____ _____ _____
Signature of owner or operator Position Date

Send copy of completed notification and certification to:

Denise Garrett, Lead and Copper Program Manager
Office of Drinking Water
PO Box 47822
Olympia, WA 98504-7822
FAX (360) 236-2252

If you need this publication in an alternate format, call (800) 525-0127. For TTY/TDD, call (800) 833-6388.

AVISO A LOS USUARIOS DEL SISTEMA DE AGUA

FORMULARIO DE VIOLACIÓN DEL MONITOREO ANUAL DE NITRATO

Nosotros, el sistema de agua _____, con número de identificación (ID) _____, situado en el condado de _____, estamos obligados a monitorear regularmente su agua potable por contaminantes específicos. Los resultados del monitoreo indican si su agua potable cumple o no con las normas de salud. Durante el año _____, no realizamos monitoreo ni pruebas del agua para el nitrato, y por lo tanto no podemos asegurar la calidad de su agua potable durante ese tiempo.

En este momento:

☐ No se requiere ninguna acción de los usuarios.

☐ Hemos colectado la muestra rutinaria de nitrato para el _____ (el año actual).

☐ Colectaremos las muestras en el futuro según la norma.

☐ Otra información para los usuarios:

Para más información, por favor contacte a _____ al (_____) _____ - _____ o en .

(El dueño / operador) (El número de teléfono) (La dirección)

Por favor comparte esta información con otras personas que pudieran tomar agua de este sistema, especialmente con aquellos que no hayan recibido este aviso directamente (por ejemplo, las personas que viven en apartamentos, residencias para ancianos, escuelas y negocios). Puede hacerlo colocando este aviso en un lugar público o entregando copias en persona o por correo.

Este aviso le fue enviado por el sistema de agua _____ la fecha ____/_____/_____.

Formulario de certificación de la notificación al público del monitoreo anual de nitrato

(Esta sección debe ser llenada por el sistema de agua. La firma abajo indica que la notificación contiene todos los elementos requeridos.)

Complete los siguientes puntos (marque todo lo que aplica)

☐ El aviso fue enviado por correo a todos los usuarios del sistema de agua el ____/_____/

☐ El aviso fue distribuido a mano a todos usuarios del sistema de agua el ____/_____/

☐ El aviso fue publicado en el periódico (adjunta la copia)

☐ Se colocó el aviso en _____ el ____/_____/
(**Solo con permiso del departamento**)

_____ _____ ____/_____/_____.
(Firma del dueño u operador) (Posición) (Fecha)

Envíe una copia de la notificación completa y la certificación a:

Denise Garrett, Lead and Copper Program Manager
Office of Drinking Water
PO Box 47822
Olympia, WA 98504-7822
FAX (360) 236-2252

NOTICE TO WATER SYSTEM USERS

COLIFORM MAJOR MONITORING VIOLATION

We, _____ Water System, I.D. _____, located in _____ County are required to monitor your drinking water for specific contaminants on a regular basis. Results of regular monitoring are an indicator of whether or not your drinking water meets health standards. During the month of _____ we did not monitor or test for coliform bacteria, and therefore cannot be sure of the quality of your drinking water during that time.

At this time:

☐ No action is required by the users.

☐ Our routine coliform sample required for the month of _____ has been collected and was found to show no presence of coliform bacteria.

☐ Samples will be collected in the future as required.

☐ Other information for customers:

For more information, contact _____ at ( )_____ or at _____.
(owner or operator) (phone number) (address)

Please share this information with all the other people who drink this water, especially those who may not have received this notice directly (for example, people in apartments, nursing homes, schools, and businesses.) You can do this by posting this notice in a public place or distributing copies by hand or mail.

This notice is sent to you by _____ Water System on ____/____/____

Coliform Major Monitoring Public Notice Certification Form
The purpose of this form (below) is to provide documentation to the department that public notice was distributed. Please check the appropriate box and fill in the date that the notice was distributed:

☐ Notice was mailed to all water customers on ____ / ____/____.

☐ Notice was hand delivered to all water customers on ___ / ___ /___.

☐ Notice was posted (*with department approval*) at:
_____ on ___ / ___ /____.

Washington State Department of Health
Division of Environmental Health
Office of Drinking Water

_____ _____ _____
Signature of owner or operator Position Date

If you need this publication in an alternate format, call (800) 525-0127. For TTY/TDD call (800) 833-6388.

Send copy of completed notification and certification to:

☐ Northwest Drinking Water
Department of Health
20435 72nd Ave S, Suite 200
Kent, WA 98032-2358
Phone: (253) 395-6750
Fax: (253) 395-6760

☐ Southwest Drinking Water
Department of Health
PO Box 47823
Olympia, WA 98504-7823
Phone: (360) 236-3030
Fax: (360) 664-8058

☐ Eastern Drinking Water
Department of Health
16201 E Indiana Ave, Suite 1500
Spokane Valley, WA 99216
Phone: (509) 329-2100
Fax: (509) 329-2104

IMPORTANT NOTICE ABOUT YOUR WATER SYSTEM
Coliform Maximum Contaminant Level (MCL) Exceeded: Non-acute MCL

The _____ water system, ID# _____ in _____ County routinely monitors for the presence of total coliform bacteria and in _____ this type of bacteria was detected. Although this incident was not an emergency, as our customer, you have a right to know what happened and what we did or are doing to correct the situation.

Coliforms are bacteria which are naturally present in the environment and are used as indicators that other, potentially-harmful, bacteria may be present. Coliforms were found in more samples than allowed and this was a warning of potential problems. The samples that showed the presence of coliform were further tested to see if other bacteria of greater concern, such as fecal coliform or *E.coli* were present. **None of these bacteria were found.**

You do not need to boil your water. People with severely compromised immune systems, infants, and some elderly may be at an increased risk. These people should seek advice from their health care provider.

What happened? What is the suspected or known source of contamination?

At this time:

☐ The problem is resolved. Additional samples collected were found to be free of coliform bacteria.
☐ We anticipate resolving the problem by ____ / ____ / ____.
☐ Other _____.

For more information, contact _____ at ( )____-_____ or at _____.
(owner or operator) (phone number) (address)

Please share this notice with all the other people who drink this water, especially those who may not have received this notice directly (for example, people in apartments, nursing homes, schools, and businesses). You can do this by posting this notice in a public place or distributing copies by hand or mail.

This notice is sent to you by _____ Date Distributed ____ / ____ / ____.

Coliform Non-acute Public Notice Certification Form

The purpose of this form (below) is to provide documentation to the department that public notice was distributed. Please check the appropriate box and fill in the date that the notice was distributed:

☐ Notice was mailed to all water customers on ____ / ____/____.
☐ Notice was hand delivered to all water customers on ___ / ___ /___.
☐ Notice was posted (*with department approval*) at:
_____ on ___ / ___ /____.

Washington State Department of Health
Division of Environmental Health
Office of Drinking Water

_____ _____ _____
Signature of owner or operator Position Date

If you need this publication in an alternate format, call (800) 525-0127. For TTY/TDD call (800) 833-6388.

Send copy of completed notification and certification to:

☐ Northwest Drinking Water
Department of Health
20435 72nd Ave S, Suite 200
Kent, WA 98032-2358
Phone: (253) 395-6750
Fax: (253) 395-6760

☐ Southwest Drinking Water
Department of Health
PO Box 47823
Olympia, WA 98504-7823
Phone: (360) 236-3030
Fax: (360) 664-8058

☐ Eastern Drinking Water
Department of Health
16201 E Indiana Ave, Suite 1500
Spokane Valley, WA 99216
Phone: (509) 329-2100
Fax: (509) 329-2104

AVISO IMPORTANTE ACERCA DEL SISTEMA DE SUMINISTRO DE AGUA

Las bacterias coliformes rebasaron el Nivel Máximo de Contaminación: NMC no agudo

El sistema de suministro de agua _____, número (ID#) _____ en el condado de _____ monitorea rutinariamente la presencia de bacterias coliformes totales. En la fecha _____, se encontró este tipo de bacteria. Aunque este incidente no es considerado una emergencia, como consumidor, Usted tiene el derecho a saber que pasó y que se ha hecho o se esta haciendo para corregir esta situación.

Las bacterias coliformes se encuentran naturalmente en el medio ambiente y se usan como indicador de la posible presencia de otras bacterias que pueden causar daño a la salud. En las muestras tomadas, las bacterias se encontraron en mayor número que el permitido y esto es una indicación de posibles problemas. Las muestras con bacterias coliformes se analizaron con más detalle en el laboratorio para ver si bacterias coliformes fecales o E. Coli pudieran también haber estado presentes. Estas bacterias causan daño a la salud de las personas. **No se encontró ninguna de estas bacterias.**

No es necesario que usted hierva el agua. Personas con un sistema inmunológico severamente comprometido, los recién nacidos y algunas personas de edad avanzada pueden tener mas riesgo de salud y deberían llamar a algún personal médico para mayor información.

¿Qué fue lo que pasó? ¿Cuál es la fuente de contaminación de la que se sabe o sospecha?

En este momento:

- ☐ El problema esta resuelto. En muestras adicionales que se colectaron no se encontraron bacterias coliformes.
- ☐ Anticipamos resolver el problema el día ____/____/____.
- ☐ Otro _____.

Para mayor información comuníquese con _____ al teléfono ( ) _____-__ _____ o con

_____	_____	_____
(dueño u operador)	(teléfono)	(dirección)

Pase esta información a todas las personas pudieran tomar agua de este suministro, especialmente aquellas personas que no hayan recibido este aviso (por ejemplo, personas que vivan en apartamentos, asilos de ancianos, escuelas y negocios.) Usted puede hacer esto colocando este aviso en un lugar público donde se pueda leer claramente o distribuyendo copias en persona o enviándolas por correo.

Este aviso es enviado a Usted por el Sistema de Suministro de Agua_____ fecha ___/___/____.

AVISO A LOS USUARIOS DEL SISTEMA DE AGUA

VIOLACIÓN DEL MONITOREO DE LOS SUBPRODUCTOS DE LA DESINFECCIÓN

Nosotros, el sistema del agua _____, con numero de identificación_____, situado en el condado de _____ estamos obligados a monitorear regularmente su agua potable por contaminantes específicos. Los resultados del monitoreo indican si su agua potable cumple o no con las normas de salud. Durante ☐ el(los) mes(es) de _____ o ☐ los cuartos de _____ en el año de _____ no realizamos monitoreo ni pruebas del agua para ☐ el total de los trihalometanos, ☐ los haloácidos, o ☐ bromatos y por lo tanto no podemos asegurar la calidad de su agua potable durante ese tiempo.

En este momento:

☐ No se requiere ninguna acción de los usuarios.

☐ Colectaremos las muestras en el futuro según la norma.

☐ Otra información para los usuarios:

Por más información, contacte a _____ al (____)_____o en_____.
(Dueño / operador) (Número de teléfono) (Dirección)

Por favor comparte esta información con otras personas que pudieran tomar agua de este sistema, especialmente con aquellos que no hayan recibido este aviso directamente (por ejemplo, las personas que viven en apartamentos, hospicios para ancianos, escuelas y negocios). Puede hacerlo colocando este aviso en un lugar público o entregando copias en persona o por correo.

Este aviso le fue enviado por el sistema de agua _____ el __/__/____.

Formulario de certificación de la notificación al público del monitoreo de los subproductos de la desinfección
El propósito de este formulario (abajo) es documentar para el departamento que el aviso público fue distribuido. Marque por favor la caja apropiada y complete la fecha que el aviso fue distribuido: (Esta sección debe ser llenada por el sistema de agua):

☐ El aviso fue enviado por correo a todos los usuarios del sistema de agua el ____/____/____.

☐ El aviso fue distribuido a mano a todos usuarios del sistema de agua el ____/____/____.

☐ Se colocó el aviso (solo con permiso del departamento) en:

_____ el ____/____/____.

Washington State Department of Health
Division of Environmental Health
Office of Drinking Water

_____ _____ ____/____/____
(Firma del dueño u operador) (Posición) (Fecha)

Si usted necesita esta publicación en un formato diferente, llame al (800) 525-0127. Para TTY/TDD, llame al (800) 833-6388.

Envíe una copia de la notificación completa y la certificación a*:*

☐ Northwest Drinking Water	☐ Southwest Drinking Water	☐ Eastern Drinking Water
Department of Health	Department of Health	Department of Health
20435 72nd Ave S, Suite 200	PO Box 47823	16201 E Indiana Ave, Suite 1500
Kent, WA 98032-2358	Olympia, WA 98504-7823	Spokane Valley, WA 99216
Phone: (253) 395-6750	Phone: (360) 236-3030	Phone: (509) 329-2100
Fax: (253) 395-6760	Fax: (360) 664-8058	Fax: (509) 329-2104

NOTICE TO WATER SYSTEM USERS

DISINFECTION BYPRODUCTS MONITORING VIOLATION

We, _____ Water System, I.D. _____, located in _____ County are required to monitor your drinking water for specific contaminants on a regular basis Results of regular monitoring are an indicator of whether or not your drinking water meets health standards. During the ☐ month(s) of _____ _____ or ☐ quarter(s) _____ in the year of _____ we did not monitor or test for ☐ Total Trihalomethanes, ☐ Haloacetic Acids, or ☐ Bromate and therefore cannot be sure of the quality of your drinking water during that time.

At this time:

☐ No action is required by the users.

☐ Samples will be collected in the future as required.

☐ Other information for customers:

For more information, contact _____ at ( )_____ or at _____.
(owner or operator) (phone number) (address)

Please share this information with all the other people who drink this water, especially those who may not have received this notice directly (for example, people in apartments, nursing homes, schools, and businesses.) You can do this by posting this notice in a public place or distributing copies by hand or mail.

This notice is sent to you by _____ Water System on ____/____/____

Disinfection Byproducts Monitoring Public Notice Certification Form
The purpose of this form (below) is to provide documentation to the department that public notice was distributed. Please check the appropriate box and fill in the date that the notice was distributed:

☐ Notice was mailed to all water customers on ____ / ____/____.

☐ Notice was hand delivered to all water customers on ___ / ___ /___.

☐ Notice was posted (*with department approval*) at:
_____ on ___ / ___ /____.

Washington State Department of Health
Division of Environmental Health
Office of Drinking Water

_____	_____	_____
Signature of owner or operator	Position	Date

If you need this publication in an alternate format, call (800) 525-0127. For TTY/TDD call (800) 833-6388.

Send copy of completed notification and certification to:

☐ Northwest Drinking Water	☐ Southwest Drinking Water	☐ Eastern Drinking Water
Department of Health	Department of Health	Department of Health
20435 72nd Ave S, Suite 200	PO Box 47823	16201 E Indiana Ave, Suite 1500
Kent, WA 98032-2358	Olympia, WA 98504-7823	Spokane Valley, WA 99216
Phone: (253) 395-6750	Phone: (360) 236-3030	Phone: (509) 329-2100
Fax: (253) 395-6760	Fax: (360) 664-8058	Fax: (509) 329-2104

NOTICE TO WATER SYSTEM USERS
LEAD AND COPPER INITIAL MONITORING VIOLATION

We, _____ Water System, I.D. _____, located in _____ County are required to monitor your drinking water for specific contaminants on a regular basis. Results of regular monitoring are an indicator of whether or not your drinking water meets health standards. In the initial monitoring period of _____ to _____ _____, we did not meet our monitoring requirements for lead and copper, and therefore cannot be sure of the quality of your drinking water at that time. At this time:

☐ No action is required by the users.

☐ Our required lead and copper samples have currently been collected.

☐ Samples will be collected in the future as required.

☐ Other information for customers:

For more information, please contact _____ at ( )___-_____ or at _____.
(owner or operator) (phone number) (address)

Please share this information with all the other people who drink this water, especially those who may not have received this notice directly (for example, people in apartments, nursing homes, schools, and businesses.) You can do this by posting this notice in a public place or distributing copies by hand or mail.

This notice is sent to you by _____ Water System on __/__/__

Lead & Copper Initial Monitoring Public Notice Certification Form
This section must be completed by Water System. Signature below indicates notice contained all required elements.

Complete the following items (check all that apply):

Washington State Department of Health
Division of Environmental Health
Office of Drinking Water

☐ Notice mailed to all water customers on ____ / ____/____.

☐ Notice hand delivered to all water customers on ___ / ___ /___.

☐ Notice published in newspaper (attach copy)

☐ Notice posted at _____ on ___ / ___ /____.
(***By Department Approval Only***)

_____ _____ _____
Signature of owner or operator Position Date

Send copy of completed notification and certification to:
Denise Garrett, Lead and Copper Program Manager
Office of Drinking Water
PO Box 47822
Olympia, WA 98504-7822
FAX (360) 236-2252

If you need this publication in an alternate format, call (800) 525-0127. For TTY/TDD, call (800) 833-6388.

NOTICE TO WATER SYSTEM USERS

LEAD AND COPPER MONITORING VIOLATION

We, _____ Water System, I.D. _____, located in _____ County are required to monitor your drinking water for specific contaminants on a regular basis. Results of regular monitoring are an indicator of whether or not your drinking water meets health standards. In _____ we did not meet our monitoring requirements for lead and copper, and therefore cannot be sure of the quality of your drinking water at that time.

At this time:

- ☐ No action is required by the users.
- ☐ Our required lead and copper samples have been collected for this monitoring period.
- ☐ Samples will be collected in the future as required.
- ☐ Other information for customers:

For more information, please contact _____ at ( )____-_____ or at _____.
(owner or operator) (phone number) (address)

Please share this information with all the other people who drink this water, especially those who may not have received this notice directly (for example, people in apartments, nursing homes, schools, and businesses.) You can do this by posting this notice in a public place or distributing copies by hand or mail.

This notice is sent to you by _____ Water System on __/__/__

Lead & Copper Monitoring Public Notice Certification Form
This section must be completed by the water system. Signature below indicates notice contained all required elements.

Complete the following items (check all that apply):

Washington State Department of Health
Division of Environmental Health
Office of Drinking Water

- ❑ Notice mailed to all water customers on ____ / ____/____.
- ❑ Notice hand delivered to all water customers on ___ / ___ /___.
- ❑ Notice published in newspaper (attach copy)
- ❑ Notice posted at _____ on ___ / ___ /____.
  (***By Department Approval Only***)

_____ _____ _____
Signature of owner or operator Position Date

Send copy of completed notification and certification to:

Denise Garrett, Lead and Copper Program Manager
Office of Drinking Water
PO Box 47822
Olympia, WA 98504-7822
FAX (360)236-2252

DOH Form 331-461 (Updated 06/11)

If you need this publication in an alternate format, call (800) 525-0127. For TTY/TDD, call (800) 833-6388.

AVISO PARA LOS USUARIOS DEL SISTEMA DE AGUA

VIOLACIÓN DEL MONITOREO DE PLOMO Y COBRE

Nosotros, el sistema de agua _____ , con número de identificación (I.D#) _____, ubicado en el condado de _____, regularmente debemos monitorear contaminantes específicos en el agua que usted toma. Los resultados del monitoreo son un indicador para comprobar si el agua que usted toma cumple con los estándares de salud. En _____ no cumplimos con el requisito de monitorear el plomo y el cobre, y por lo tanto no podemos estar seguros de la calidad del agua que usted tomó en esa fecha.

En este momento:

☐ Ninguna acción se requiere de parte de los usuarios.

☐ Nuestras muestras de plomo y cobre requeridas han sido tomadas para este periodo de monitoreo.

☐ Las muestras serán tomadas en el futuro como se requiere.

☐ Otra información para los usuarios:

Para mayor información comuníquese con _____ al teléfono ( ) _____-__ _____ o con

_____	_____	_____
(dueño u operador)	(teléfono)	(dirección)

Pase esta información a todas las personas que pudieran tomar agua de este suministro, especialmente aquellas personas que no hayan recibido este aviso (por ejemplo, personas que vivan en apartamentos, asilos de ancianos, escuelas y negocios.) Usted puede hacerlo colocando este aviso en un lugar público donde se pueda leer claramente o distribuyendo copias en persona o enviándolas por correo.

Este aviso es enviado a usted por el Sistema de Suministro de Agua_____ fecha ___/___/____.

Si usted necesita esta publicación en formatos alternativos llame al (800) 825-0127. Para TTY/TDD, llame al (800) 833-6388.

NOTICE TO WATER SYSTEM USERS

MONTHLY BROMATE MONITORING VIOLATION FORM

We, _____ Water System, I.D. _____, located in _____County are required to monitor your drinking water for specific contaminants on a regular basis. Results of regular monitoring are an indicator of whether or not your drinking water meets health standards. During the month(s) of _____, we did not monitor or test for the disinfection by-product bromate, and therefore cannot be sure of the quality of your drinking water during that time.

At this time:

☐ No action is required by the users.

☐ Our routine monthly bromate sample(s) have been taken for _____ *(time period)*.

☐ Samples will be collected in the future as required.

☐ Other information for customers:

For more information, please contact _____ at ( )___-_____ or at _____.
(owner or operator) (phone number) (address)

Please share this information with all the other people who drink this water, especially those who may not have received this notice directly (for example, people in apartments, nursing homes, schools, and businesses.) You can do this by posting this notice in a public place or distributing copies by hand or mail.

This notice is sent to you by _____ Water System on __/__/__

Monthly Bromate Monitoring Public Notice Certification Form

(This section must be completed by Water System. Signature below indicates notice contained all required elements.)

Complete the following items (check all that apply):

Washington State Department of Health
Division of Environmental Health
Office of Drinking Water

☐ Notice mailed to all water customers on ____ / ____/____.

☐ Notice hand delivered to all water customers on ___ / ___ /___.

☐ Notice published in newspaper (attach copy)

☐ Notice posted at _____ on ___ / ___ / ____.
(***By Department Approval Only***)

_____ _____ _____
Signature of owner or operator Position Date

The Department of Health is an equal opportunity agency. For persons with disabilities, this form is available on request in other formats. To submit a request, please call 1-800-525-0127 (TTY 1-800-833-6388).

Send copy of completed notification and certification to:
Office of Drinking Water, Water System Support Section, PO Box 47822, Olympia WA 985047822 fax (360) 236-2252

DOH Form #331-394 (02/08)

Washington State Department of Health
Division of Environmental Health
Office of Drinking Water

PUBLIC NOTICE CERTIFICATION FORM
NITRATE MCL VIOLATION

Within 10 days of notifying your customers, you are required to send to your Regional Office of Drinking Water this completed form and a copy of each type of notice you distributed (hand-delivered notices, press releases, newspaper articles, etc.). This form certifies that you have met all the public notification requirements. If the chemical contamination remains for more than three months, you must notify your water users again and provide another Public Notice Certification Form to the Department of Health.

With this certification, you are also stating that you will meet future requirements for notifying new billing units of the violation or situation.

Water System: _____ID #: _____County:_____

Violation Date:_____ / _____ / _____ Violation Type:_____

This public water system certifies that public notice has been given to water users following state and federal requirements for delivery, content, and deadlines.

Complete the following items:

Yes No

☐ ☐ Distribution was completed on ___ / ___ /____. Check all that apply:
- ☐ Hand delivery,
- ☐ Press release (TV, radio, newspaper, etc.),
- ☐ Posting at_____ (by DOH approval only),
- ☐ Other _____ (by DOH approval only).

☐ ☐ Were the water users notified within 24 hours?

_____ _____ _____
Signature of owner or operator Position Date

Northwest Regional Office:
20435 72nd Ave. S., Suite 200,
Kent WA 98032
Main Office: (253) 395-6750
Fax: (253) 395-6760

Area of Coverage: Island, King, Pierce, San Juan, Skagit, Snohomish, and Whatcom Counties.

Southwest Regional Office:
243 Israel Road SE, Tumwater
PO Box 47823, Olympia WA 98504
Main Office: (360) 236-3030
Fax (360) 664-8058

Area of Coverage: Clallam, Clarks, Cowlitz, Grays Harbor, Jefferson, Kitsap, Lewis, Mason, Pacific, Skamania, Thurston, and Wahkiakum Counties.

Eastern Regional Office:
16201 East Indiana Ave., Suite 1500,
Spokane Valley WA 99216
Main Office: (509) 329-2100
Fax: (509) 329-2104

Area of Coverage: Adams, Asotin, Benton, Chelan, Columbia, Douglas, Ferry, Franklin, Garfield, Grant, Kittitas, Klickitat, Lincoln, Okanogan, Pend Oreille, Spokane, Stevens, Walla Walla, Whitman, and Yakima Counties.

The Department of Health is an equal opportunity agency. For persons with disabilities, this form is available on request in other formats. To submit a request, please call 1-800-525-0127 (TTY 1-800-833-6388).

NOTICE TO WATER SYSTEM USERS
QUARTERLY NITRATE MONITORING VIOLATION FORM

We, _____Water System, I.D. _____, located in _____ County are required to monitor your drinking water for specific contaminants on a regular basis. Results of regular monitoring are an indicator of whether or not your drinking water meets health standards. We are required to monitor for nitrates on a quarterly basis. We have failed to meet the monitoring requirements for nitrate for the _____ quarter(s) of _____ (year). We cannot be sure of the quality of your drinking water during that time. At this time:

☐ No action is required by the users.

☐ Our current quarterly nitrate samples have been collected.

☐ Samples will be collected in the future as required.

☐ Other information for customers:

For more information, please contact _____ at ( )___-_____ or at _____.
(owner or operator) (phone number) (address)

Please share this information with all the other people who drink this water, especially those who may not have received this notice directly (for example, people in apartments, nursing homes, schools, and businesses.) You can do this by posting this notice in a public place or distributing copies by hand or mail.

This notice is sent to you by _____ Water System on __/__/__

Quarterly Nitrate Monitoring Public Notice Certification Form
(This section to be completed by the Water System. Signature below indicates notice contained all required elements.)

Complete the following items (check all that apply):

Washington State Department of Health
Division of Environmental Health
Office of Drinking Water

☐ Notice mailed to all water customers on ____ / ____/____

☐ Notice hand-delivered to all water customers on ___ / ___ /___

☐ Notice published in newspaper (attach copy)

☐ Notice posted at _____ on ___ / ___ /____
(***By Department Approval Only***)

_____ _____ _____
Signature of owner or operator Position Date

Send copy of completed notification and certification to:
Denise Garrett, Lead and Copper Program Manager
Office of Drinking Water
PO Box 47822
Olympia, WA 98504-7822
FAX (360) 236-2252

If you need this publication in an alternate format, call (800) 525-0127. For TTY/TDD, call (800) 833-6388.

NOTICE TO WATER SYSTEM USERS

QUARTERLY TOTAL TRIHALOMETHANE (TTHM)/HALOACETIC ACIDS (HAA5) MONITORING VIOLATION FORM

We, _____ Water System, I.D. _____, located in _____County are required to monitor your drinking water for specific contaminants on a regular basis. Results of regular monitoring are an indicator of whether or not your drinking water meets health standards. During the following quarters: _____, we did not monitor or test for the disinfection by-products TTHM and HAA5, and therefore cannot be sure of the quality of your drinking water during that time.

At this time:

☐ No action is required by the users.

☐ Our routine quarterly TTHM/HAA5 samples have been taken for _____ *(time period)*.

☐ Samples will be collected in the future as required.

☐ Other information for customers:

For more information, please contact _____ at ( )___-_____ or at _____.
(owner or operator) (phone number) (address)

Please share this information with all the other people who drink this water, especially those who may not have received this notice directly (for example, people in apartments, nursing homes, schools, and businesses.) You can do this by posting this notice in a public place or distributing copies by hand or mail.

This notice is sent to you by _____ Water System on __/__/__

Quarterly TTHM/HAA5 Monitoring Public Notice Certification Form

(This section must be completed by Water System. Signature below indicates notice contained all required elements.)

Complete the following items (check all that apply):

☐ Notice mailed to all water customers on ____ / ____/____.

☐ Notice hand delivered to all water customers on ___ / ___ /___.

☐ Notice published in newspaper (attach copy)

☐ Notice posted at _____ on ___ / ___ / ____.

(***By Department Approval Only***)

Washington State Department of Health
Division of Environmental Health
Office of Drinking Water

_____ _____ _____
Signature of owner or operator Position Date

The Department of Health is an equal opportunity agency. For persons with disabilities, this form is available on request in other formats. To submit a request, please call 1-800-525-0127 (TTY 1-800-833-6388).

Send copy of completed notification and certification to:
Office of Drinking Water, Water System Support Section, PO Box 47822, Olympia WA 985047822 fax (360) 236-2252

DOH Form #331-395 (02/08)

NOTICE TO WATER SYSTEM USERS
Reliably & Consistently Under the Maximum Contaminant Level (MCL)
ANNUAL NITRATE MONITORING VIOLATION FORM

We, _____ Water System, I.D. _____, located in _____County are required to monitor your drinking water for specific contaminants on a regular basis. Results of regular monitoring are an indicator of whether or not your drinking water meets health standards. We are required to collect a nitrate sample for Source #____ each year, between the months of _____ and _____. During _____, we did not monitor or test for nitrate and therefore cannot be sure of the quality of your drinking water during that time. At this time:

- ☐ No action is required by the users.
- ☐ Our routine nitrate sample required to be collected between _____ *and* _____ *(current year)* has been collected.
- ☐ Samples will be collected in the future as required.
- ☐ Other information for customers:

For more information, please contact _____ at ( )___-_____ or at _____.
(owner or operator) (phone number) (address)

Please share this information with all the other people who drink this water, especially those who may not have received this notice directly (for example, people in apartments, nursing homes, schools, and businesses.) You can do this by posting this notice in a public place or distributing copies by hand or mail.

This notice is sent to you by _____ Water System on __/__/__

R & C Under the MCL Annual Nitrate Monitoring Public Notice Certification Form

(This section must be completed by the Water System. A signature below indicates the notice contained all required elements.)

Complete the following items (check all that apply):

Washington State Department of Health
Division of Environmental Health
Office of Drinking Water

☐ Notice mailed to all water customers on ____ / ____/____

☐ Notice hand-delivered to all water customers on ___ / ___ /___

☐ Notice published in newspaper (attach copy)

☐ Notice posted at _____ on ___ / ___ / ____
(***By Department Approval Only***)

_____ _____ _____
Signature of owner or operator Position Date

Send a copy of completed notification and certification to:

Denise Garrett, Lead and Copper Program Manager
Office of Drinking Water
PO Box 47822
Olympia, WA 98504-7822
FAX (360) 236-2252

If you need this publication in an alternate format, call (800) 525-0127. For TTY/TDD, call (800) 833-6388.

APPENDIX S

Water Ordinances and City Code

Title 15
WATER AND SEWAGE*

Chapters:

15.04 Definitions

15.08 Application for Service

15.12 Service Installation

15.14 Water Service Installation and Fees

15.16 General Rules and Conditions of Service

15.20 Billing Procedures

15.24 Monthly Service and Consumption Rates

15.28 Side Sewers—Construction, Repair and Connection

15.36 Drainage and Discharge into Sewers Regulated

15.38 Sewer Main Extensions

15.40 Offenses

15.44 Sanitary Sewer Comprehensive Plan

15.48 Comprehensive Water Plan

15.52 Storm Water Drainage

15.56 Surface Water Utility Monthly Service Rates and Storm Water Capital Facilities Charges

* For the statutory provisions regarding sewage disposal by a code city, see RCW 35A.21.150. For the provisions regarding a code city's authority to protect the city's water supply, etc., see RCW 35A.70.010.

Chapter 15.04
DEFINITIONS

Sections:

15.04.010 Definitions.
15.04.020 Apartments and establishment.
15.04.030 Applicant.
15.04.034 *Repealed.*
15.04.040 *Repealed.*
15.04.050 City engineer.
15.04.060 City manager.
15.04.065 *Repealed.*
15.04.070 Cover.
15.04.080 Department of finance and administration.
15.04.083 *Repealed.*
15.04.084 *Repealed.*
15.04.090 Downspout.
15.04.100 *Repealed.*
15.04.105 *Repealed.*
15.04.110 Garbage.
15.04.120 Garbage, properly shredded.
15.04.130 Health officer.
15.04.140 House drain.
15.04.145 *Repealed.*
15.04.146 *Repealed.*
15.04.150 Industrial waste.
15.04.160 Licensed contractor, side sewer.
15.04.163 *Repealed.*
15.04.164 *Repealed.*
15.04.170 Natural outlet.
15.04.175 *Repealed.*
15.04.176 New impervious surface.
15.04.178 Nonresidential storm water facilities.
15.04.180 Parking strip, inside.
15.04.190 Parking strip, outside.
15.04.200 Permit card.
15.04.210 Person.

15.04.220 *Repealed.*
15.04.225 *Repealed.*
15.04.230 Public place or public area.
15.04.235 *Repealed.*
15.04.238 Residential storm water facilities.
15.04.240 Service line.
15.04.250 Sewage.
15.04.260 Sewage treatment plant.
15.04.270 Sewage works.
15.04.280 Sewer.
15.04.300 Sewer, public.
15.04.310 Sewer, sanitary.
15.04.315 Sewer stub-in, sanitary.
15.04.320 *Repealed.*
15.04.325 Side sewer.
15.04.330 Sidewalk.
15.04.335 *Repealed.*
15.04.340 Standard plans and specifications.
15.04.345 *Repealed.*
15.04.350 *Repealed.*
15.04.360 Watercourse.
15.04.365 Water quality treatment facility.

15.04.010 Definitions.

The definitions contained in this chapter and in Article III of Volume I of the 2005 Stormwater Management Manual for Western Washington, herein incorporated by reference, apply throughout this title, unless from context another meaning is clearly intended. In the event of conflict, the definitions in the Manual will control. The city engineer shall at all times keep on file with the city clerk, for reference by the general public, not less than three copies of the Manual as herein adopted by reference. (Ord. 4200 § 1, 2009: Ord. 3086 § 1, 1988: Ord. 874 § 2.0, 1962)

15.04.020 Apartments and establishment.

For the purpose of this title, the terms, “apartment” and “establishment” each mean that portion of a building, whether a room or combination of rooms which taken together are used or held by the owner or person, entitled to possession as a separate unit. (Ord. 2062 § 1.06, 1969)

15.04.030 Applicant.

"Applicant" means the owner or authorized agent of the property to be served and the applicant shall be the responsible person for the payment of bills for sanitary sewer service or water service. (Ord. 2062 § 1.03, 1969)

15.04.034 Best management practice (BMP).

Repealed by Ord. 4200. (Ord. 3711 § 3 (part), 1999)

15.04.040 B.O.D.

Repealed by Ord. 4200. (Ord. 874 § 2.1, 1962)

15.04.050 City engineer.

"City engineer" means the engineer duly appointed by the city to supervise and direct the design and construction of local sewerage facilities, acting personally or through agents or assistants duly authorized by him/her, such agents or assistants acting within the scope of the particular duties assigned to them. (Ord. 3086 § 2, 1988: Ord. 874 § 2.2, 1962)

15.04.060 City manager.

"City manager" means the city manager, the director of public works, the operations and maintenance engineer, the director of finance and administration or any authorized agent, deputy or other person acting under the authority of the city manager. (Ord. 4416 § 50, 2013: Ord. 3573 § 64, 1997: Ord. 3368 § 1 (part), 1993: Ord. 3086 § 3, 1988: Ord. 2062 § 1.01, 1969)

15.04.065 Conveyance system.

Repealed by Ord. 4200. (Ord. 3711 § 3 (part), 1999)

15.04.070 Cover.

"Cover" means the depth of the material lying between the top of the sewer, or drain, and the finished grade immediately above it. (Ord. 874 § 2.4, 1962)

15.04.080 Department of finance and administration.

"Department of finance and administration" means the person or persons designated by the city manager to collect water and sewer rates and charges. (Ord. 4416 § 51, 2013: Ord. 3573 § 65, 1997: Ord. 2062 § 1.04, 1969)

15.04.083 Detention.

Repealed by Ord. 4200. (Ord. 3711 § 3 (part), 1999)

15.04.084 Detention facility.

Repealed by Ord. 4200. (Ord. 3711 § 3 (part), 1999)

15.04.090 Downspout.

“Downspout” means the leader or pipe above ground which is installed to conduct water from the roof gutter. (Ord. 874 § 2.6, 1962)

15.04.100 Drain.

Repealed by Ord. 4200. (Ord. 874 § 2.7, 1962)

15.04.105 Erosion.

Repealed by Ord. 4200. (Ord. 3711 § 3 (part), 1999)

15.04.110 Garbage.

“Garbage” means all animal and vegetable refuse from kitchen and household waste that shall have been prepared for or shall have resulted from preparation of food or drink to be consumed on the premises or for consumption off the premises when served by caterers. (Ord. 874 § 2.8, 1962)

15.04.120 Garbage, properly shredded.

“Garbage, properly shredded” means garbage that has been shredded to such degree that all particles will be carried freely under the flow conditions normally prevailing in public sewers with no particle greater than three-eighths inch in any dimension. (Ord. 874 § 2.9, 1962)

15.04.130 Health officer.

“Health officer” means the officer responsible for public health or his authorized representative employed by the county health department. (Ord. 3368 § 1 (part), 1993: Ord. 874 § 2.5, 1962)

15.04.140 House drain.

“House drain” means the pipe used for conveying sewerage from the building to a point two and one-half

feet outside the foundation wall and if there be no foundation wall to a point two and one-half feet beyond the outer line of any footings, pilings, building supports, or porch under which it may run, whether such drain consists of one line extending from the building or of two or more of such lines. (Ord. 3368 § 1 (part), 1993: Ord. 874 § 2.10, 1962)

15.04.145 Illicit discharge.

Repealed by Ord. 4200. (Ord. 3711 § 3 (part), 1999)

15.04.146 Impervious surface.

Repealed by Ord. 4200. (Ord. 3711 § 3 (part), 1999)

15.04.150 Industrial waste.

“Industrial waste” means any liquid, solid, or gaseous substance or form of energy or combination thereof resulting from any process of industry, manufacturing, food processing, business, trade or research, including the development, recovery, or processing of natural resources. (Ord. 874 § 2.11, 1962)

15.04.160 Licensed contractor, side sewer.

“Licensed contractor, side sewer” means a bonded and licensed person as a contractor through the state as qualified and competent to do work incidental to the construction and/or repair of side sewers under a permit issued under this title. (Ord. 3368 § 1 (part), 1993: Ord. 874 § 2.3, 1962)

15.04.163 METRO.

Repealed by Ord. 3870. (Ord. 3086 § 4, 1988)

15.04.164 METRO sewer system.

Repealed by Ord. 3870. (Ord. 3086 § 5, 1988)

15.04.170 Natural outlet.

“Natural outlet” means any storm water outlet into a watercourse, pond, ditch, lake, sound, or other body of surface water. (Ord. 3368 § 1 (part), 1993: Ord. 874 § 2.12, 1962)

15.04.175 New development.

Repealed by Ord. 4200. (Ord. 3711 § 3 (part), 1999)

15.04.176 New impervious surface.

"New impervious surface" means the addition of a hard or compacted surface such as pavement, gravel, dirt, or roofs or the addition of a more compacted surface such as the paving of preexisting dirt or gravel. (Ord. 3711 § 3 (part), 1999)

15.04.178 Nonresidential storm water facilities.

"Nonresidential storm water facilities" means storm water detention or water quality facilities that are located on private property and which are not contained in tracts or easements dedicated to the city. These facilities do not serve public streets, but rather serve only buildings, parking lots, and other amenities associated with the privately owned development. Multifamily developments such as condominiums and apartments are considered nonresidential for the purposes of this title. (Ord. 3711 § 3 (part), 1999)

15.04.180 Parking strip, inside.

"Parking strip, inside" means that portion of the street area lying between a public sidewalk location and the property line. (Ord. 874 § 2.13, 1962)

15.04.190 Parking strip, outside.

"Parking strip, outside" means that portion of a street area lying between a public sidewalk location and the curb location. (Ord. 874 § 2.14, 1962)

15.04.200 Permit card.

"Permit card" means a building, grading or right-of-way permit card issued by the city in conjunction with any permit and such card shall be posted on the premises and shall be readily and safely accessible to the city engineer. (Ord. 3368 § 1 (part), 1993: Ord. 874 § 2.15, 1962)

15.04.210 Person.

"Person" means any individual, firm, company, association, partnership, society, corporation or group. (Ord. 3368 § 1 (part), 1993: Ord. 2062 § 1.02, 1969; Ord. 874 § 2.16, 1962)

15.04.220 pH.

Repealed by Ord. 4200. (Ord. 874 § 2.17, 1962)

15.04.225 Pollution.

Repealed by Ord. 4200. (Ord. 3711 § 3 (part), 1999)

15.04.230 Public place or public area.

“Public place or public area” means any space dedicated to or acquired by the city for the use of the general public. (Ord. 874 § 2.18, 1962)

15.04.235 Redevelopment.

Repealed by Ord. 4200. (Ord. 3711 § 3 (part), 1999)

15.04.238 Residential storm water facilities.

“Residential storm water facilities” means storm water detention or water quality facilities that are either in the public right-of-way or that are in a tract or easement dedicated to the city. These facilities usually serve public streets and single-family residences. (Ord. 3711 § 3 (part), 1999)

15.04.240 Service line.

“Service line” means that portion of a pipe line, either water or sanitary sewer connecting the city-owned and maintained main or trunk line and the premises to be served. Sewer service lines shall also be known as “side sewers.” (Ord. 3368 § 1 (part), 1993: Ord. 2653 § 1, 1982: Ord. 2062 § 1.05, 1969)

15.04.250 Sewage.

“Sewage” means a combination of the water-carried wastes from residences, business buildings, institutions, industrial establishments, etc. (Ord. 3086 § 6, 1988: Ord. 874 § 2.19, 1962)

15.04.260 Sewage treatment plant.

“Sewage treatment plant” means any arrangement of devices and devices affixed thereto used for treating sewage.(Ord. 3368 § 1 (part), 1993: Ord. 874 § 2.21, 1962)

15.04.270 Sewage works.

“Sewage works” means all the facilities for collecting, pumping, treating, and disposing of sewage. (Ord. 874 § 2.20, 1962)

15.04.280 Sewer.

"Sewer" means a conduit designed or used to transport wastewater. (Ord. 3086 § 7, 1988: Ord. 874 § 2.22, 1962)

15.04.300 Sewer, public.

"Public sewer" means a sewer in which all owners of abutting properties have equal rights and which is controlled by public authority. (Ord. 874 § 2.24, 1962)

15.04.310 Sewer, sanitary.

"Sanitary sewer" means any pipe, conduit, or other structure, outlet or drain designed to carry sanitary sewage and/or industrial wastes, and to which storm, surface and ground waters are not intentionally admitted. (Ord. 3368, § 1 (part), 1993: Ord. 874 § 2.25, 1962)

15.04.315 Sewer stub-in, sanitary.

"Sanitary sewer stub-in" means a sanitary sewer stub provided to a property for future sewer connection. (Ord. 3368 § 1 (part), 1993)

15.04.320 Sewer, storm.

Repealed by Ord. 4200. (Ord. 874 § 2.26, 1962)

15.04.325 Side sewer.

"Side sewer" means a conduit extending from the plumbing system of a building to and connecting with a public or private sewer. (Ord. 3086 § 8, 1988)

15.04.330 Sidewalk.

"Sidewalk" means the walkway in the public area lying parallel or generally parallel to the roadway. It the walk is not yet paved all measurements shall be based on location and elevation established by the city engineer. (Ord. 874 § 2.27, 1962)

15.04.335 Source control best management practices (source control BMPs).

Repealed by Ord. 4200. (Ord. 3711 § 3 (part), 1999)

15.04.340 Standard plans and specifications.

"Standard plans and specifications" means those rules, regulations, policies and amendments thereto

issued by the city engineer, including water systems, sewer systems, storm drainage systems, road construction and street improvements, traffic control, and erosion control pursuant to Section 15.28.290. (Ord. 3368 § 1 (part), 1993: Ord. 874 § 2.28, 1962)

15.04.345 Storm water.

Repealed by Ord. 4200. (Ord. 3711 § 3 (part), 1999)

15.04.350 Suspended solids.

Repealed by Ord. 4200. (Ord. 874 § 2.29, 1962)

15.04.360 Watercourse.

"Watercourse" means a channel in which a natural flow of water occurs or has occurred either continuously or intermittently. (Ord. 874 § 2.30, 1962)

15.04.365 Water quality treatment facility.

"Water quality treatment facility" means a drainage facility designed to reduce pollutants once they are already contained in storm and surface water runoff. Water quality treatment facilities are the structural component of best management practices (BMPs), which provide the best available and reasonable physical, structural, managerial, or behavioral activity, that when used singly or in combination eliminate or reduce the contamination of surface and/or ground waters. (Ord. 3711 § 3 (part), 1999)

Chapter 15.08
APPLICATION FOR SERVICE

Sections:

15.08.010 Required—Contents.
15.08.020 Application not binding.
15.08.025 Application for service outside city limits.
15.08.040 Installation dependent on available facilities.
15.08.041 Owners of property benefitted to pay for modification.
15.08.050 Acceptance of application deemed contract.
15.08.060 Use of service for specified purpose only.

15.08.010 Required—Contents.

The city will require prospective customers to sign an application for water service or sewer service. The application must be made in writing or on a standard form at the office of the public works department. The application shall set forth:

(1) Signature of applicant;

(2) Owner of premises to be served;

(3) Location of premises;

(4) Address of party paying bills;

(5) The size of service pipe required;

(6) Purpose for which service is to be used;

(7) Payment of all required fees as established in this title and in Section 5.74.040. (Ord. 4215 § 2, 2009: Ord. 3368 § 2 (part), 1993: Ord. 2062 § 2.01, 1969)

15.08.020 Application not binding.

The application is merely a written request for service and does not, in itself, bind the city to serve. (Ord. 2062 § 2.02, 1969)

15.08.025 Application for service outside city limits.

The city may, by contract with a requesting property owner, agree to permit a connection to the water and/or sewer facilities of the city in order to serve property outside the city limits, subject the following:

(1) Property Contiguous to the City Limits. Property which is contiguous to the city limits must be annexed to the city prior to application for service. Connection shall then be requested in the manner provided in Section 15.08.020; provided, however, that the city may, only when deemed to be in the best interest of the city and property owner, permit application to be filed and connection to the system made prior to the effective date of the annexation, but in no event, shall a connection be made to the system prior to the filing with the city of the petition to annex required by RCW 35A.14.120, signed by owners of not less than seventy-five percent of the assessed valuation of the property sought to be annexed, including the property for which the connection to the system is requested.

(2) Property which is Not Contiguous to the City Limits. When property is not contiguous to the city limits, an application for service outside the city limits may only be considered by the city for acceptance subject to the following:

(A) At the time of making application, the property owner shall enter into an agreement with the city to annex the property to the city at such time as it becomes contiguous to the then existing city limits. Such agreement shall be in a form sufficient to run with the land and shall be recorded with the King County department of elections and records.

(B) The use and structure to be served by the proposed connection shall be consistent with the Kirkland land use polices plan.

(C) Any development or construction required prior to connection shall be accomplished in accordance with the required standard of King County and, insofar as practical, the development standards contained in the Kirkland Municipal Code, including those standards relating to land surface modification and storm and surface water control.

(D) If an application for sewer service outside the city limits is not within the “city growth boundary” as defined by the city comprehensive plan, then service may be provided to the subject property provided an interlocal agreement between the city and the city or county or sewer district in which the property resides is drafted and recorded. The interlocal agreement shall allow the city to serve the subject property with sewer.

(E) Before connection is made, the property owner shall enter into a water/sewer connection and service contract with the city, which contract shall include the terms and conditions under which the city will permit connection (including extension of the system where required) to the water/sewer system and following connection to provide water and/or sewer service to said property. (Ord. 3368 § 2 (part), 1993: Ord. 2499 § 1, 1979)

15.08.040 Installation dependent on available facilities.

The installation of any water or sewer service line is dependent upon available adequate water or sewer facilities. The public works department is not required to approve an application and make installation where a modification to the system would be necessary to make facilities available. As used herein, the phrase “modification” or “modification to the system” means the construction or installation of any new trunk service line or collector line, or the extension of any such existing line or any replacement of such facilities to increase the capacity flow where the system is inadequate to handle the increased demand that would result from the applicant’s proposed use. Modifications shall also include the installation of fire hydrants where required for adequate fire protection as determined by the department of fire services. (Ord. 3368 § 2 (part), 1993: Ord. 2309 § 1, 1976: Ord. 2062 § 2.04, 1969)

15.08.041 Owners of property benefited to pay for modification.

The cost of any modification to the system shall be borne by each property abutting upon or benefiting from such modification or by the owners of such property. (Ord. 3368 § 2 (part), 1993: Ord. 2309 § 2, 1976)

15.08.050 Acceptance of application deemed contract.

If written application for service is approved by the city, the application shall be considered as a contract in which the applicant agrees to abide by such rates, rules and regulations as are in effect at the time of signing the application or as may be adopted thereafter by the city and to pay all charges, rates and fees promptly. (Ord. 3368 § 2 (part), 1993: Ord. 2062 § 2.05, 1969)

15.08.060 Use of service for specified purpose only.

No person receiving water or sewer service from the city water system shall be entitled to the use thereof for any purpose other than that stated in the application, nor to grant service in any way to other persons or premises. (Ord. 2062 § 2.06, 1969)

Chapter 15.12
SERVICE INSTALLATION*

Sections:

15.12.010 Habitable building—Toilet facilities—Connection to sewer required.
15.12.020 Required connections subject to service charge.
15.12.032 Required sewer extension prior to connection.
15.12.040 Placement of side sewer service lines.
15.12.050 Sewer service stubs.
15.12.060 Side sewer fees.
15.12.063 Sewer capital facility charges (SCFC)—Definitions.
15.12.064 Sewer capital facility charge adjustment.
15.12.070 Fees for special services rendered.

* Side sewer installation—See Chapters 15.28 and 15.32 of this title.

15.12.010 Habitable building—Toilet facilities—Connection to sewer required.

A lot or parcel of property:

(a) Any portion of which lies within three hundred thirty feet of a public sewer as calculated along the shortest route in public rights-of-way or easements to the nearest point of the land or parcel to be served; and

(b) Upon which there is situated any building or structure for human habitation or use for any purpose involving human occupancy, shall have installed in the building or structure suitable toilet and sanitary drainage facilities, and the same shall be connected to the proper public sewer (except as permitted by Section 15.28.010) in accordance with the provisions and specifications of Chapters 15.28 and 15.36.

The owner of any lot or parcel required by the foregoing paragraph to be connected to the public sewer shall at his expense so connect within six months of the date of completion of any sewer line extension which brings the public sewer within three hundred thirty feet of the property line. (Ord. 3368 § 3 (part), 1993: Ord 3020 § 1, 1987: Ord. 2175 § 1, 1971: Ord. 2062 § 3.01, 1969)

15.12.020 Required connections subject to service charge.

Each lot or parcel of real property required by this title or by any other ordinance of the city or any law of the state of Washington to be connected with the sewer system of the city shall be subject to a monthly sewer charge as herein established whether such lot or parcel of real property is actually connected to the sewer system or not; provided, however, the monthly sewer charge will be waived if the property owner can establish to the satisfaction of the city engineer that the lot or parcel is connected to a septic system

approved by the county. (Ord. 3368 § 3 (part), 1993: Ord. 2062 § 3.02, 1969)

15.12.032 Required sewer extension prior to connection.

Prior to the connection of any property to the city sewer system, the sewer system main lines must be extended to the subject property's furthest property line by way of public right-of-way or easement. The sanitary sewer extension is subject to the following:

(1) Using the sanitary sewer comprehensive plan and sound engineering judgment, the city engineer shall determine the length and number of sanitary sewer extensions for the subject property applying for connection.

(2) The sanitary sewer must traverse along or through the subject property within a right-of-way or a recorded sanitary sewer easement to provide for future extension unless the city engineer determines such an extension is not necessary because the subject property is the last property to be served or that an extension would serve no other property.

(3) The city engineer may determine that a property proposed for connection be required to extend more than one sanitary sewer line along or through the subject property.

(4) If the property proposed for connection has a sanitary sewer main fronting the property and the sewer main extends to the furthest property line, and no other sanitary sewer extensions are required either along another right-of-way frontage or through an easement, then the applicant may connect with a side sewer under the conditions of this title and under public works standards and specifications. (Ord. 3368 § 4 (part), 1993)

15.12.040 Placement of side sewer service lines.

All sewer service lines shall normally be placed at least eighteen inches below the surface of the ground and at least five feet horizontally from a water pipe line. Wherever, because of prevailing conditions, a sewer service line is placed less than eighteen inches below the surface of the ground, ductile iron pipe shall be used. All side sewer service lines must be installed per the most current department of public works standards. (Ord. 3368 § 3 (part), 1993: Ord. 2062 § 3.04, 1969)

15.12.050 Sewer service stubs.

Sewer service lines shall be stubbed from the main to the property line by the city where appropriate and a fee collected at the time of connection for the cost of the installation of the stub. The property owner shall be responsible for the installation and the maintenance of the sewer service line from the city-owned and maintained public sewer main to the point of service, including any sewer stubs installed by the city for

the benefit of the property owner. (Ord. 3368 § 4 (part), 1993)

15.12.060 Side sewer fees.

Whenever any connection is made for the benefit of property lying within the city limits to the city sewer system, installation and inspection fees shall be paid as outlined in Section 5.74.040. (Ord. 4215 § 3, 2009: Ord. 3675 § 1 (part), 1998: Ord. 3368 § 3 (part), 1993: Ord. 2461 § 1, 1978: Ord. 2372 § 1, 1978: Ord. 2175 § 2, 1971: Ord. 2062 § 3.06, 1969)

15.12.063 Sewer capital facility charges (SCFC)—Definitions.

The sewer connection charge(s) must be paid prior to issuance of the permit and shall be determined as to each requested connection by the application of the criteria set forth below.

(1) For all sewer connections a sewer capital facility charge will be assessed and shall consist of the following:

(a) Each sewer connection will be assigned a “residential customer equivalent” (RCE) factor. The RCE has a base of one for a three-fourths-inch by five-eighths-inch water meter; i.e., a building served by a five-eighths-inch by three-fourths-inch meter will be given a sewer RCE factor of one.

(b) The RCE for each sewer connection is as follows:

Single-Family/Multifamily Sewer Fees	
Single-family	(1 RCE)
2-unit multi	(1.6 RCE, 0.8 RCE per unit)
3-unit multi	(2.4 RCE)
4-unit multi	(3.2 RCE)
5 or more units	Number of units x 0.64 x 1 RCE (0.64 RCE per unit)

(c) Other use (commercial, office, light industrial, churches, school, etc.) shall be based on the water meter size serving the property:

Meter Size	RCE
5/8" x 3/4"	1

1"	2.5
1-1/2"	5
2"	8
3"	16
4"	25
6"	50
8"	80

(d) Each property will be assessed an SCFC for each domestic water meter service or as determined by the department of public works. (Ord. 4225 § 1, 2009: Ord. 3939 § 2B, 2004: Ord. 3870 § 3, 2002: Ord. 3720 § 1, 1999: Ord. 3368 § 4 (part), 1993)

15.12.064 Sewer capital facility charge adjustment.

The SCFC fee with Section 15.12.063 will be adjusted periodically, but not less often than every odd number year. The adjustment shall use the method following:

(1) At the time of adjustment, the value of the sewer capital facility shall be determined based on the worth of all city sewer mains less any sewer mains funded by local improvement districts, grants, or installation by private entities (developers); this shall be known as the plant in service;

(2) The total of all connections to the sewer capital facility shall be determined and an RCE factor assigned;

(3) The adjusted SCFC shall be calculated by dividing the current sewer capital facility value by the current number of RCEs;

(4) Upon determining the adjusted SCFC, the director of public works shall file with the director of finance and administration three copies of the adjusted fee schedule along with the values the fee schedule is based on. The director of finance and administration shall file said schedules and values with the city clerk to be available for use by the general public and the affected city officials and departments;

(5) Whenever any connection is made to the city sewer system to serve property outside of the city limits, the property will be assessed the same fees set forth in this section. (Ord. 4416 § 52, 2013; Ord. 3870 § 4, 2002: Ord. 3573 § 66, 1997; Ord. 3368 § 4 (part), 1993)

15.12.070 Fees for special services rendered.

In addition to all other user rates and service connection fees required to be paid to the city, the following special service fees are established and shall be paid by the owner of the property served:

Service Calls. When a service call is made at the request of the owner or occupant of the premises for assistance in locating and/or repairing a plugged sanitary sewer drain, no charge will be assessed if plugged sewer lines were not caused by the owner or occupant of the premises. However, a charge as set forth in Section 5.74.040 shall be made only when it is determined that the location or cause of the sanitary sewer drain plug is not within the city-owned main or trunk line and it was caused by the owner or occupant of the premises. The foregoing fees when incurred shall be added to the next customer billing as provided in Section 15.20.050. (Ord. 4215 § 4, 2009: Ord. 3368 § 3 (part), 1993: Ord. 2653 § 4, 1982)

Chapter 15.14
WATER SERVICE INSTALLATION AND FEES

Sections:

15.14.010 Required water extensions prior to connection.
15.14.020 Water capital facility charges (WCFC).
15.14.030 Water meter installation charge.
15.14.040 Placement of water service lines.
15.14.050 Fees for special services rendered.

15.14.010 Required water extensions prior to connection.

Prior to the connection of any property to the city water system, the water system must be extended to the subject property's furthest property line by way of right-of-way or easement. The domestic water extensions are subject to the following:

(1) Using the water comprehensive plan and sound engineering judgment, the city engineer shall determine the length and number of water main extensions for the particular property applying for connection.

(2) The water main must traverse along or through the subject property within a right-of-way or a recorded water easement to provide for future extension unless the city engineer determines such an extension is not necessary because the subject property is the last property to be served or that an extension would serve no other property.

(3) The city engineer may determine that a property be required to extend more than one water line along or through the subject property.

(4) If the property proposed for connection has a water main fronting the property and the water main extends to the furthest property line, and no other water main extensions are required either along another right-of-way frontage or through an easement, then the applicant may connect with a water service under the conditions of this title and under public works standards and specifications. (Ord. 3368 § 5 (part), 1993)

15.14.020 Water capital facility charges (WCFC).

The water connection charge(s) must be paid prior to issuance of the permit and shall be determined as to each requested connection by the application of the criteria set forth below.

(1) For all water connections a base local water capital facility charge (WCFC) will be assessed and will consist of the following:

(a) Each water connection will be assigned a “residential customer equivalent” (RCE) factor;

(b) The water connection RCE shall be determined based on the proposed water meter size;

(c) The water meter shall be sized in accordance with the Uniform Plumbing Code as amended and adopted by Chapter 21.24 of this code;

(d) A water connection’s RCE is based on the flow potential through its meter. A five-eighths-inch by three-fourths-inch meter is assigned a base factor of one;

(e) The base WCFC is multiplied by RCE factors based upon water meter sizes as follows:

Meter Size	RCE
5/8" x 3/4"	1
1"	2.5
1-1/2"	5
2"	8
3"	16
4"	25
6"	50
8"	80

(f) The fee schedule will be adjusted periodically, but not less often than every odd number year, to reflect a change in the WCFC. The adjustment shall use the method following:

(i) At the time of adjustment, the value of the water capital facility shall be determined based on the worth of all city water mains less any water mains funded by local improvement districts, grants or installation by private entities (developers); this shall be known as the in-plant service;

(ii) The total of connections to the water capital facility shall be determined and a RCE factor assigned;

(iii) The adjusted WCFC shall be calculated by dividing the current water capital facility value by the current number of RCEs;

(iv) Upon determining the adjusted WCFC, the director of public works shall file with the director of finance and administration three copies of the adjusted fee schedule along with the values the fee schedule is based on. The director of finance and administration shall file the schedules and values with the city clerk to be available for use by the general public and the affected city officials and departments.

(2) For all water connections a based regional capital facility charge (RCFC) will be assessed and will

consist of the following:

(a) Each water connection will be assigned a “cascade equivalent residential unit” (CERU) factor based on the proposed meter size;

(b) The water meter shall be sized in accordance with the Uniform Plumbing Code as amended and adopted by Chapter 21.24;

(c) A water connection’s CERU factor is based on the flow potential through its meter. A five-eighths-inch by three-fourths-inch meter is assigned a base factor of one. The base RCFC is multiplied by CERU factors based upon water meter sizes as follows:

Meter Size	CERU
5/8" x 3/4"	1
1"	2.5
1-1/2"	5
2"	8
3"	16
4"	25
6"	50
8"	80
10"	115
12"	160

(d) The RCFC may be adjusted periodically pursuant to the terms of the interlocal agreement between the city and the Cascade Water Alliance.

(e) Upon receiving the adjusted RCFC, the director of public works shall file with the director of finance and administration three copies of the adjusted fee schedule. The director of finance and administration shall file the schedules with the city clerk to be available for use by the general public and the affected city officials and departments.

(3) The water connection charge required by subsections (1) and (2) of this section will be assessed against both domestic and irrigation water meter connections.

(4) When water meter size is increased solely to provide fire sprinkler protection, the water connection charge required by subsections (1) and (2) of this section shall be based on the size required by the Uniform Plumbing Code, as amended and adopted by Chapter 21.24. (Ord. 4416 § 53, 2013: Ord. 3870 § 5, 2002: Ord. 3720 § 2, 1999; Ord. 3573 § 67, 1997; Ord. 3527 § 1, 1996; Ord. 3368 § 5 (part), 1993)

15.14.030 Water meter installation charge.

(a) The meter installation charge shall be based upon the size of the meter required. Each meter fee shall include an administrative fee and is set forth in Section 5.74.040.

(b) It is generally the responsibility of the owner/contractor to perform the installation, abandonment, or upgrade of water services. In certain instances, the city water division may elect to perform this work. The fee for this is on a time and material basis, plus city overhead costs.

(c) Annual Adjustment in Meter Charge. Annually the director of public works shall adjust the meter charges in accordance with the following adjustment formula: the director shall determine for each meter size the average cost to the city for meter plus installation, using the actual cost of meter and installation for the immediate past thirty meter installations; provided, that he shall exclude from the calculation any meter installation occurring more than three years prior to the date of calculation, and any meter installation where the cost thereof was either fifty percent more than or fifty percent less than the calculated average cost. To the average cost shall be added an administration fee and the sum thereof shall be the adjusted water meter charge to be paid. (Ord. 4215 § 5, 2009: Ord. 3720 § 3, 1999; Ord. 3368 § 5 (part), 1993)

15.14.040 Placement of water service lines.

All water service lines shall be placed at least twenty-four inches below the surface of the ground. (Ord. 3368 § 5 (part), 1993)

15.14.050 Fees for special services rendered.

In addition to all other user rates and service connection fees required to be paid to the city, the following special service fees are established in Section 5.74.040 and shall be paid by the owner of the property served:

(1) Customer-Requested Service Shutoff. A water service shutoff or disconnect made at the request of the owner or occupant of the premises served.

(2) Water Service Shutoff or Turn-On for Unpaid User Bill. A water service shutoff or disconnect for nonpayment of delinquent water, sewer or refuse bill as authorized by Section 15.20.020, or for turning it on after payment of such delinquencies.

(3) Service Calls. When a service call is made at the request of the owner or occupant of the premises for assistance in shutting off the water line to help locate and/or repair a water line leak, no charge will be assessed if the broken water line was not caused by the owner or occupant of the premises. However, a

charge shall be made if it is determined the water line leak was caused by the owner or occupant of the premises.

(4) Special Water Meter Reading. A reading of a customer's water meter, at the request of the owner, title or escrow company, occurring on any day other than the day the city has established as the property's regular scheduled water meter reading, forty dollars.

(5) Alternate Billing. When alternate billing is requested as authorized by Section 15.20.010.

(6) Cut Lock Fee. When the water meter is discovered unlocked after the meter has been turned off and locked for nonpayment of delinquent water, sewer or refuse bill as authorized by Section 15.20.020.

(7) Shutoff Tag. A customer receiving a shut-off tag notice as final notice before water is shut off for nonpayment.

(8) The foregoing fees when incurred shall be added to the next customer billing as provided in Section 15.20.050. (Ord. 4215 § 6, 2009: Ord. 4070 § 1, 2006: Ord. 3993 § 1, 2005: Ord. 3368 § 5 (part), 1993)

Chapter 15.16
GENERAL RULES AND CONDITIONS OF SERVICE*

Sections:

15.16.010 Interruption of service—City not liable.
15.16.020 Volume and pressure—City not liable.
15.16.030 Prevention of water waste.
15.16.040 Water shortage—Use restrictions.
15.16.042 Water restrictions—Powers of the city.
15.16.045 Water restrictions—Penalty.
15.16.047 Enforcement.
15.16.050 Connection between private and city system prohibited.
15.16.060 Shut-off for repairs—Notice.
15.16.070 Installations of water service pipe.
15.16.080 Access to water meter to be maintained.
15.16.090 Water consumption meters—Size requirements—Penalty for failure to install.

* For regulations pertaining to drainage and discharges into sewers, see Chapter 15.36 of this title. For regulations pertaining to offenses, see Chapter 15.40 of this title.

15.16.010 Interruption of service—City not liable.

The department of public works will use all reasonable means to provide an adequate and continuous water service for all customers, but in case the water service is interrupted or reduced for any cause, the city shall not be liable for any injury or damages resulting therefrom and any such interruptions or reductions in service shall not give rise to any cause of action for a breach of agreement for service. (Ord. 3368 § 6 (part), 1993: Ord. 2062 § 4.01, 1969)

15.16.020 Volume and pressure—City not liable.

The city makes no commitments as to the volume of water available, pressure per square inch or continuity of service, and will not be liable for injuries or damages due to insufficient volume, inadequate pressure or interruption of service. (Ord. 3368 § 6 (part), 1993: Ord. 2062 § 4.02, 1969)

15.16.030 Prevention of water waste.

It shall be the duty of each customer to eliminate waste of water supply by repairing, or causing to be repaired, any defective or leaking pipe or plumbing fixture. No person shall use more water for irrigation or other uses than is reasonably necessary. (Ord. 2062 § 4.03, 1969)

15.16.040 Water shortage—Use restrictions.

In case of shortage of water, the department of public works is authorized to impose water use restrictions in order to efficiently safeguard the safety and health of the general public or to provide for the public convenience. The use of water for irrigation, cooling, or other uses may be forbidden, restricted, or regulated and such regulations may be made effective as to all customers or as to particular classes of customers. Rationing may be imposed during any shortage of water, either in lieu of or in addition to other measures hereby authorized. (Ord. 3083 § 1, 1988: Ord. 2062 § 4.04, 1969)

15.16.042 Water restrictions—Powers of the city.

The director of public works shall conduct public education efforts regarding the benefits and necessity of conservation by the public, and is authorized to promulgate such rules and regulations as may be necessary to implement water use restriction. The director of public works is further authorized to make exceptions to such restrictions in specific cases as he/she finds reasonable, such as, but not limited to, watering newly seeded or sodded lawns, alleviating unnecessary economic hardship to commercial or industrial activities or preventing possible damage to health, safety or welfare. (Ord. 3083 § 2, 1988)

15.16.045 Water restrictions—Penalty.

It is unlawful for any person to violate water use restrictions. In addition to other lawful remedies, the director of public works is authorized to impose a surcharge for each day a customer's water usage practices exceed water conservation restrictions as provided for in this chapter. The applicable per-day surcharge amount is set forth in Section 5.74.040 and will be added to and become a part of the water bill for the customer in addition to any service rate amounts as set forth in Chapter 15.20. Prior to the imposition of a surcharge, the public works department shall send a notice at the service address advising of the customer's water usage practices in excess of mandatory water shortage restrictions and advising that a surcharge may be imposed for any further violations. (Ord. 4215 § 7, 2009: Ord. 3083 § 3, 1988)

15.16.047 Enforcement.

(a) Each police officer of the city and the director or any employee of the city public works department or fire and building department shall have the authority to enforce the provisions of this chapter.

(b) In addition to penalties otherwise provided, the director of public works is authorized to install a water restricting device on the waterline or lines serving any person who commits a second or subsequent violation of any of the provisions of this chapter. Alternatively, after such notice of a violation as may reasonably be given based on the circumstances, the director of public works may cause water service to be terminated for subsequent or continuing violation of water conservation restrictions. (Ord. 3083 § 4,

1988)

15.16.050 Connection between private and city system prohibited.

The city will not permit any physical connection between private water supply and the city distribution system or supply line. (Ord. 2062 § 4.05, 1969)

15.16.060 Shut-off for repairs—Notice.

The city shall, whenever it finds it to be necessary for the purpose of making repairs or improvements to the system, have the right to suspend temporarily the delivery of water. In all such cases, as reasonable notice thereof as circumstances will permit, will be given to the customer. Such repairs and improvements will be made as rapidly as may be practicable and at such times as will cause the least inconvenience to the customer. (Ord. 2062 § 4.06, 1969)

15.16.070 Installations of water service pipe.

Water service pipes running from the water main to the meter shall be installed by a licensed contractor with a right-of-way use permit. Upon installation of the service line, the city will install the appropriate water meter and meter box. The department of public works reserves the right to install both the service line and the meter. A water service pipe from the meter to the premises being served will be maintained by the property owner. In cases where a meter may be located a considerable distance from the main, the customer shall maintain the service pipe for the entire distance from the normally designated location of the water meter to the point of ultimate usage or consumption. (Ord. 3368 § 6 (part), 1993: Ord. 2653 § 1, 1982: Ord. 2062 § 4.07, 1969)

15.16.080 Access to water meter to be maintained.

A. It is unlawful for any person owning or occupying any premises served by the city water system to permit the accumulation of dirt, debris, landscaping materials or vegetation over or around the water service meter, or to in any other manner obstruct physical or visual access to the meter for either repair, inspection or reading.

B. If, following ten days' notice from the city to do so, any such owner or occupant has failed to remove any landscaping, dirt, debris or other material or objects which obstruct the meter reader's ability to read, inspect or repair the meter, then the city may cause to have such clearing work accomplished, and the cost therefor will appear on the water bill at the next regular billing period. If the cost is not then timely paid, water service may then be disconnected in the same manner as for any other nonpayment of a water consumption charge. (Ord. 2628 § 1, 1981)

15.16.090 Water consumption meters—Size requirements—Penalty for failure to install.

A. Every customer connecting to the city water system shall provide for installation of a water consumption meter sized in accordance with the provisions of the Uniform Plumbing Code (Section 1009); provided, that no consumption meter shall be smaller than three-fourths-inch by five-eighths-inch.

B. Every customer shall, upon request of the department of public works, provide for replacement of the water consumption meter with a larger water consumption meter, in accordance with subsection A above, whenever additional plumbing fixtures are added to the premises served, or water is withdrawn from the system through the meter in excess of the rated capacity of the existing water consumption meter. Failure to so install when required by the city pursuant to this section shall result in a discontinuance of water service. (Ord. 3368 § 6 (part), 1993: Ord. 2629 § 1, 1981)

Chapter 15.20
BILLING PROCEDURES

Sections:

15.20.010 Person billed.
15.20.020 Due date—Delinquency—Penalty.
15.20.030 Delinquency constitutes a lien.
15.20.040 Discontinuance of service not relief from payment.
15.20.050 Bimonthly billing.

15.20.010 Person billed.

Charges for refuse, water and sewer services furnished by the city shall be billed to the owner of the property to which the services are rendered; provided, that when the owner and tenant in possession, in writing, file with the city a request that the billing be sent to the tenant, the city manager acting through the director of finance and administration may, at his discretion, grant such a request, subject to such reasonable conditions as he finds are appropriate. Notwithstanding to whom the billing is sent, the obligation for payment shall be the joint and several responsibility of the property owner and the tenant. (Ord. 4416 § 54, 2013: Ord. 3573 § 68, 1997: Ord. 3368 § 7 (part), 1993: Ord. 2942 § 1, 1986: Ord. 2062 § 5.01, 1969)

15.20.020 Due date—Delinquency—Penalty.

All charges for utility services furnished by the city shall be due and payable to the city on the date shown on the face of the bill. Charges for services remaining unpaid at the close of business on the thirtieth day following the billing date shall be considered delinquent and automatically subject to an additional charge, as a penalty, of ten percent of the delinquent amount. Payments will first be applied to the oldest delinquent charges. Remaining funds will be credited first against current charges from the garbage utility, then against current charges related to the sewer system, and then applied to current charges from the water utility. If the delinquent charges and penalties are still unpaid at the close of business on the fortieth day following the billing date, the services shall be discontinued and the water supply shall be turned off at the meter. The water service shall not be restored until all past due charges, penalties and fees have been paid. The finance director is authorized, but not obligated, to waive all or a portion of the penalties provided herein in the event the director determines the late payment was the result of excusable neglect or extreme hardship. (Ord. 4255 § 1, 2010: Ord. 4211 § 1, 2009: Ord. 3368 § 7 (part), 1993: Ord. 3091 § 1, 1988: Ord. 2653 § 3, 1982: Ord. 2062 § 5.02, 1969)

15.20.030 Delinquency constitutes a lien.

All charges for water service installation and sewer installations and all monthly service rates provided for

in this title, together with penalties and interest thereon, when unpaid and delinquent shall be a lien upon the property to which the water or sewer service is rendered superior to all other liens and encumbrances whatsoever except for general taxes and local special assessments. Enforcement of such lien or liens shall be in the manner provided by law. (Ord. 3368 § 7 (part), 1993: Ord. 2062 § 5.03, 1969)

15.20.040 Discontinuance of service not relief from payment.

Discontinuance of service for any cause stated in this chapter shall not release the customer from his obligation to the city for payment of bills or charges. In addition, before water service is restored to such property, the customer will be subject to the water turn-on fee as described in Section 15.14.050. (Ord. 3368 § 7 (part), 1993: Ord. 2062 § 5.04, 1969)

15.20.050 Bimonthly billing.

All charges for water services and for sewer services shall be billed to the customer by the city on a bimonthly billing cycle. Actual water consumption will be charged to the date of the meter reading. All charges for service will be from the beginning of one month to the end of the following month. All bills shall be paid to the department of finance and administration. (Ord. 4416 § 55, 2013: Ord. 3573 § 69, 1997: Ord. 3368 § 7 (part), 1993: Ord. 2062 § 5.05, 1969)

Chapter 15.24
MONTHLY SERVICE AND CONSUMPTION RATES*

Sections:

15.24.010 Service rates established.
15.24.020 Monthly water rates.
15.24.030 Service to condominium.
15.24.040 Hydrant meter water usage rates.
15.24.050 Reduction for lost water.
15.24.060 Water service for fire protection only.
15.24.070 Monthly volume-based sewer rates.
15.24.080 Exempt meters—Nonresidential customers only.
15.24.100 Qualified senior citizen rate.

* For the statutory provisions regarding the rates that may be charged by a city and the factors that the city may consider when determining its fees, see RCW 35.67.020.

15.24.010 Service rates established.

The monthly service rates to be paid to the city by customers of the water-sewer system are established as set forth in this chapter. The basic or minimum rates for both water and sewer shall be charged whether the premises are occupied or vacant. (Ord. 3368 § 7 (part), 1993: Ord. 3238 § 2, 1990)

15.24.020 Monthly water rates.

The monthly water charge required to be paid to the city by customers of the water system is established in Table 15.24.020.

Table 15.24.020 (Effective 2013)*

Customer Class	Rate
a. Single-family residential	
(1) Basic charge (includes 200 cubic feet of water consumed)	$17.32
PLUS	

(2) Water consumption charge – 201 cubic feet to 1,200 cubic feet $4.16 per 100 cubic feet

PLUS

(3) Water consumption charge – over 1,200 cubic feet $5.45 per 100 cubic feet

b. All other customers, including commercial and multifamily residential

	Meter Size (inches)	Rate
(1) Basic charge per size of meter	5/8 x 3/4	$15.46
	1	$26.59
	1-1/2	$42.25
	2	$67.77
	3	$192.49
	4	$265.88
	5	$343.78
	6	$455.16
	8	$677.95

PLUS

(2) Water consumption charge $4.67 per 100 cubic feet of water consumed

For customers with separate

irrigation meters

(3) Sprinkler consumption charge	$5.53 per 100 cubic feet of water consumed

* Code reviser's note: Section 2 of Ordinance 4373 provides, "The monthly service and consumption rates for water customers established in this ordinance shall go into effect and become the rates to be charged as of December 1, 2012; provided, however, that the monthly rates for water customers billed on the City of Kirkland billing cycles number 2, number 4, and number 5 shall go into effect January 1, 2013."

Table 15.24.020 (Effective 2014)*

Customer Class	Rate
a. Single-family residential	
(1) Basic charge (includes 200 cubic feet of water consumed)	$18.16
PLUS	
(2) Water consumption charge – 201 cubic feet to 1,200 cubic feet	$4.36 per 100 cubic feet
PLUS	
(3) Water consumption charge – over 1,200 cubic feet	$5.72 per 100 cubic feet
b. All other customers, including	

commercial and multifamily residential

	Meter Size (inches)	Rate
(1) Basic charge per size of meter	5/8 x 3/4	$16.21
	1	$27.88
	1-1/2	$44.31
	2	$71.07
	3	$201.86
	4	$278.83
	5	$360.52
	6	$477.33
	8	$710.97

PLUS

(2) Water consumption charge	$4.90 per 100 cubic feet of water consumed

For customers with separate irrigation meters

(3) Sprinkler consumption charge	$5.80 per 100 cubic feet of water consumed

* Code reviser's note: Section 2 of Ordinance 4373 provides, "The monthly service and consumption rates for water customers established in this ordinance shall go into effect and become the rates to be charged as of December 1, 2013; provided, however, that the monthly rates for water customers billed on the City of Kirkland billing cycles number 2, number 4, and number 5 shall go into effect January 1, 2014."

(Ord. 4424 § 1, 2013: Ord. 4373 § 1, 2012; Ord. 4260 § 1, 2010; Ord. 4259 § 1, 2010; Ord. 4148 § 1, 2008; Ord. 4147 § 1, 2008; Ord. 4068 § 1, 2006; Ord. 4066 § 1, 2006; Ord. 4012 § 1, 2005; Ord. 3851 § 1, 2002; Ord. 3804 § 1, 2001: Ord. 3788 § 2, 2001)

15.24.030 Service to condominium.

For the purposes of Chapters 15.20 and 15.24, “single-family residence” includes any condominium unit which is a dwelling and has a separate water meter. A “condominium unit” is a part of property which is governed by the Horizontal Property Regimes Act (Chapter 64.32 RCW) or Condominium Act (Chapter 64.34 RCW). If a condominium unit does not have a separate water meter, service charges will be billed to the person responsible for maintenance of the water service pipe from the water meter to the condominium unit or to the owner of another part of the property. (Ord. 3296 § 1, 1991)

15.24.040 Hydrant meter water usage rates.

The use of any fire hydrant for domestic use without a city-issued hydrant water meter is prohibited. A hydrant water meter may be obtained through the water department and is subject to the following fees:

Hydrant Meters

Deposits:

3/4-inch	$450.00
2-inch	$900.00

Water consumption rates:

At the current sprinkler consumption charge and a monthly minimum fee of:

3/4-inch	$5.00
2-inch	$20.00

Water fill station permit:

At the current sprinkler consumption charge with a $10.00 minimum.

The “current sprinkler consumption charge” is the rate set forth in Table 15.24.020.

(Ord. 3766 § 1, 2000: Ord. 3720 § 4, 1999: Ord. 3368 § 7 (part), 1993)

15.24.050 Reduction for lost water.

All water lost from any size meter unknown to the owner and proved to be a failure in the plumbing, may be charged out at current wholesale plus ten percent and the owner’s bill credited for the balance. (Ord. 3368 § 8 (part), 1993: Ord. 2129 § 1 (part), 1970: Ord. 2062 § 6.04, 1969)

15.24.060 Water service for fire protection only.

All water lines installed on private property for fire protection only do not require a meter and are not subject to monthly service charges, provided the installation is not used for any other use or purpose, and the installation was made at no expense to the city. (Ord. 2129 § 1 (part), 1970: Ord. 2062 § 6.05, 1969)

15.24.070 Monthly volume-based sewer rates.

(a) The monthly sewer charge required to be paid to the city by customers of the Kirkland sewer system is established in Table 15.24.070.

(b) Annually, the city will calculate each single-family residential customer's average winter water consumption ("AWWC"). The resulting AWWC will be the basis for such customer's monthly sewer rate for the following calendar year.

(c) The director of public works is authorized to adopt administrative procedures for the purpose of administering the provisions of this chapter, including the procedure for annual calculation of average winter water consumption.

Table 15.24.070 (Effective 2012)

Customer Class	Rate
a. Single-family residential	
Basic charge	$48.79 for first 300 cubic feet of average winter water consumption ("AWWC").
PLUS	
Consumption charge	$4.23 per 100 cubic feet of AWWC beyond first 300 cubic feet.
b. Multifamily residential and commercial	

Basic charge	$48.09 for first 600 cubic feet of water consumed.
PLUS	
Consumption charge	$8.44 per 100 cubic feet of water consumed beyond first 600 cubic feet.

c. In special cases, single-family residents will be billed according to the following policies:

Special Case	Sewer Rate Policy
New homes	Billed only basic charge until use is established.
Changes in property ownership	Billed only basic charge until use is established.
Changes in tenancy	Billed only basic charge until use is established.
Non-water customers	Billed at system average.
Leak adjustments	Billed per adjusted winter volume. City will factor water leak adjustment into calculation for sewer rate.

Table 15.24.070 (Effective 2013)*

Customer Class	Rate

a. Single-family residential

Basic charge	$52.60 for first 300 cubic feet of average winter water consumption ("AWWC").
PLUS	
Consumption charge	$4.27 per 100 cubic feet of AWWC beyond first 300 cubic feet.

b. Multifamily residential and commercial

Basic charge	$54.06 for first 600 cubic feet of water consumed.
PLUS	
Consumption charge	$9.01 per 100 cubic feet of water consumed beyond first 600 cubic feet.

c. In special cases, single-family residents will be billed according to the following policies:

Special Case	**Sewer Rate Policy**
New homes	Billed only basic charge until use is established.
Changes in property ownership	Billed only basic charge until use is established.
Changes in tenancy	Billed only basic charge until use

	is established.
Non-water customers	Billed at system average.
Leak adjustments	Billed per adjusted winter volume. City will factor water leak adjustment into calculation for sewer rate.

* Code reviser's note: Section 2 of Ordinance 4374 provides, "The monthly service and consumption rates for sewer customers established in this ordinance shall go into effect and become the rates to be charged as of December 1, 2012; provided that, the monthly rates for sewer customers billed on the City of Kirkland billing cycles number 2, number 4, and number 5 shall go into effect January 1, 2013."

(Ord. 4374 § 1, 2012; Ord. 4263 § 1, 2010; Ord. 4262 § 1, 2010; Ord. 4146 § 1, 2008; Ord. 4145 § 1, 2008; Ord. 4069 § 1, 2006; Ord. 4067 § 1, 2006; Ord. 4013 § 1, 2005; Ord. 3962 § 1, 2004; Ord. 3912 § 2, 2003)

15.24.080 Exempt meters—Nonresidential customers only.

(a) Where the use of water by a nonresidential customer is such that a portion of all of the water used does not flow into the sewer system, but is lost by evaporation, irrigation, sprinkling or other causes, or is used in manufacturing or in a manufacturer's product, and the person in control provides proof of this fact to the satisfaction of the director of public works and installs other measuring devices approved by the city manager acting through the public works director to measure the amount of water so used and so lost, no charge shall be made for sewer service because of water so used or lost.

(b) In addition to the above, the measuring devices (exempt or deduct meters) are subject to the following:

(1) Deduct meter readings are to be turned in bimonthly, in writing, to the city utility billing department on the fifteenth of each month. Written deduct meter readings shall be sent to:

The City of Kirkland

123 5th Ave.

Kirkland, WA 98033

Att.: Utility Billing

(2) Deduct meters will be inspected twice annually on or about the first day of January and on or about the first day of July by the department of public works. The fee for each inspection is set forth in Section 5.74.040.

(3) The customer is responsible for reporting when a deduct meter has been damaged (the date) and when the meter is to be replaced or repaired. All repairs or replacement of the deduct meters shall be performed by a licensed contractor and the customer shall be responsible for all associated costs.

(4) Deduct meters shall be tested at least every five years or more frequently as determined by the director of public works. The customer is responsible for the testing cost. If the meter is not tested within one month of notice by the department of public works, the deduct meter will no longer be recognized by the utility billing department.

(5) Only meters certified by the department of public works shall be used as deduct meters. The water department shall keep a current list of acceptable meters.

(6) When it is necessary for city staff to read or inspect a deduct meter, the customer or a building representative shall be available to accompany city staff when entering the building. (Ord. 4215 § 8, 2009: Ord. 3368 § 8 (part), 1993: Ord. 3238 § 5, 1990: Ord. 2129 § 1, (part), 1970: Ord. 2062 § 6.07, 1969)

15.24.100 Qualified senior citizen rate.

(a) The water and wastewater user rates to be charged to a qualified low-income senior citizen single-family residential customer shall be:

(1) Water.

(A) Fifty percent of the basic charge (includes two hundred cubic feet of water consumed) as set forth in Table 15.24.020.

(B) Water consumption charge as set forth in Table 15.24.024.

(2) Sewer. Seventy-five percent of the single-family residential rate set forth in Table 15.24.070.

(b) For the purposes of this section, “qualified low-income senior citizen” means a person who meets the following qualifications:

(1) Resides in a single-family residential unit;

(2) Customer or spouse, if married, must be sixty-two years of age or older; and

(3) Gross income received by customer and spouse, if married, shall not exceed (from all sources of income), as to either single persons or married persons as the case may be, the annual low-income index generated by the county for use in federal housing and community development block grant programs in the county.

(c) Proof of qualification, including verification of gross income level, shall be made by affidavit of qualification signed under oath by the senior citizen customer and then filed with the city. The affidavit of qualification form shall be furnished by the city. The city, in its discretion, may also require the senior citizen customer to provide copies of his or her Social Security benefits statement and federal income tax return for the previous year. In addition, the city, in its discretion, may require any customer paying the qualified senior citizen rate to produce updated proof of qualification at any time in accordance with the provisions of this subsection. A customer paying the qualified senior citizen rate must promptly notify the city if the customer no longer meets the criteria for receiving the qualified senior citizen rate.

(d) A single-family residential customer who is either disabled or blind, according to Social Security criteria, and who also meets the qualification of subparagraphs (1) and (3) of subsection (b) of this section shall for the purposes of this section be a qualified senior citizen customer.

(e) A single-family residential customer who requires home kidney dialysis treatment, as certified by a recognized kidney center, and who also meets the qualifications of subparagraphs (1) and (3) of subsection (b) of this section shall for the purposes of this section be a qualified senior citizen customer. (Ord. 3766 § 5, 2000: Ord. 3515 § 2, 1995: Ord. 3295 § 3, 1991: Ord. 3248 § 1, 1991: Ord. 3198 § 1, 1989)

Chapter 15.28
SIDE SEWERS—CONSTRUCTION, REPAIR AND CONNECTION

Sections:

15.28.010 Connection required.
15.28.020 Connection notice—Noncompliance—Costs charged to owner.
15.28.040 Connection—Compliance and permit required.
15.28.050 Connection permit—Application—Contents—Approval.
15.28.060 Connection—Ascertainment of permit possession.
15.28.070 Construction inside property line—Permit required—Leaving excavation unguarded.
15.28.080 Permit—Only specified work to be done.
15.28.100 Permits—Term—Renewal.
15.28.110 *Repealed.*
15.28.120 Permit card—Posting required.
15.28.130 Inspections.
15.28.135 Side sewer ownership.
15.28.140 Filling trenches and covering sewer—Inspection prerequisite.
15.28.150 Backfilling excavations.
15.28.160 Contractor noncompliance—Notice—Costs charged to contractor.
15.28.170 Side sewer—Nonconforming or dangerous—Failure to construct or repair—Notice.
15.28.180 Installation, construction and maintenance costs borne by owner.
15.28.190 Existing side sewer—Use—Approval.
15.28.200 Lifting house drain—Backups—Backwater sewage valve.
15.28.210 Grades—Cover—Diameter—Vaults and privies.
15.28.220 Downspouts.
15.28.230 Easements.
15.28.240 Materials and workmanship—Excavations.
15.28.242 Materials.
15.28.250 Disturbing sewer systems unlawful.
15.28.260 Excavations—Protection.
15.28.270 Restoration of streets and sidewalks.
15.28.280 Inspections—Authority.
15.28.290 Rules and regulations.

15.28.010 Connection required.

(a) The owner or occupant of any lands or premises shall connect all buildings located thereon to the nearest accessible public sewer whenever there is a public sewer within three hundred thirty feet as

measured along the public right-of-way or easements thereof, as follows:

1. Existing buildings must connect if:

A. Single-family dwellings:

(1) Replacement of existing septic tank or drainfield is necessary;

(2) Additional construction is proposed that adds sewage load or in any way affects on-site sewage disposal; and in either case

(3) Any portion of the property is within three hundred thirty feet of a public sewer.

Concomitant agreements providing for future connection to the sanitary sewer system will be required for any permits issued for property meeting either (1) or (2) above, but lying outside the distance limits specified in paragraph (3) above.

B. Multifamily dwellings and nonresidential buildings must connect if:

(1) Replacement of septic tank or drainfield is necessary; or

(2) Additional construction is proposed that adds sewage load or in any way affects on-site sewage disposal; and

(3) Any portion of the property is within six hundred sixty feet of a public sewer line.

Concomitant agreements providing for future connection to the sanitary sewer system will be required for any permits issued for property meeting either (1) or (2) above, but lying outside the distance limits specified in paragraph (3) above.

C. Notwithstanding any of the above, existing developments shall connect when a health hazard is found to exist within the neighborhood, as determined by the county health department, city of Kirkland, or other agency with jurisdiction.

2. New developments, buildings or structures:

A. Single-family dwellings on an existing lot or a new lot created by a short subdivision must connect if the lot size is less than thirty-five thousand square feet and the lot is located within three hundred thirty feet of a sanitary sewer.

B. Notwithstanding any of the above, on-site disposal in lieu of connection shall be granted only upon written approval of the King County health department, the city of Kirkland, or other agency having jurisdiction, and a concomitant agreement providing for future connection to the sanitary sewer has been

signed and delivered to the city.

C. The following land development actions shall require connection to the public sewer system regardless of the distance of the land from the public sewer: short subdivision, subdivision, multifamily construction, or nonresidential construction, unless sewer connection is exempted by subsection 2.A above.

3. The city engineer shall prescribe the manner in which such connection shall be made.

(b) No drain or sewer shall be constructed so as to discharge upon the surface of any public area. (Ord. 3368 § 10 (part), 1993: Ord. 3252 § 1, 1991; Ord. 3203 § 1, 1990; Ord. 3020 § 2, 1987: Ord. 874 § 3.0, 1962)

15.28.020 Connection notice—Noncompliance—Costs charged to owner.

(a) Whenever any land, buildings or premises is required to be connected with a public sewer or otherwise drained, as provided in Section 15.28.010, the King County health officer shall serve upon the owner, agent, or occupant of the lands, buildings or premises, a notice in writing specifying the time within which such connection must be made, which time shall not be more than sixty days from the date of delivery of such notice.

(b) If such owner, agent or occupant fails and neglects or refuses to connect the lands, buildings or premises with the public sewer within the specified time, the health officer shall notify the city engineer, whereupon the city engineer may make such connection and the cost thereof shall be charged to the owner, agent or occupant and a bill showing the amount thereof mailed or delivered to him or posted upon the premises, whereupon the amount shall immediately be paid to the city treasurer. (Ord. 3368, § 10 (part), 1993: Ord. 874 § 4.0, 1962)

15.28.040 Connection—Compliance and permit required.

(a) It is unlawful to make any connection with any public or private sewer, drain or natural outlet without complying with all the provisions of this chapter and Chapter 15.36 in relation thereto and having a permit to do so from the city.

(b) If side sewer work is required in a public right-of-way or easement but outside of the property it serves, the city shall not issue a side sewer permit to any person unless such person holds a valid Washington State plumber's certificate or permit, issued pursuant to Chapter 18.106, Revised Code of Washington, or a general contractor licensed under the state of Washington.

(c) No licensed contractor shall break, alter or tamper with any public sewer, provided, however, he may

connect to a “Y” or “T” under the supervision and approval of the city engineer. (Ord. 3368 § 10 (part), 1993: Ord. 2718 § 1, 1982: Ord. 874 § 6.0, 1962)

15.28.050 Connection permit—Application—Contents—Approval.

(a) Application for the permit required by Section 15.28.040 shall be filed with the city engineer stating the name of the owner, the correct address and legal description of the property to be served, dimensions and locations of any buildings on the property and the whole course of the drain from the public sewer or other outlet to its connection with the building or property to be served. The application shall be submitted to the city engineer for approval, who may change or modify the same and designate the manner and place in which such sewers shall be connected with the public sewer, may also specify the material, size and grade of such sewer, and shall endorse his approval upon the application if the same is acceptable to him. The city engineer will require the permittee to furnish him plans pertaining to the application and issuance of the permit.

(b) Upon approval of the application, the city engineer shall issue for his records a sewer plat showing the size and location of the public sewer, the point of connection, the location of any buildings on the lot, and such other information as may be available and required.

(c) Upon approval of the application and issuance or the permit it shall be unlawful to alter or to do any other work than as provided for in the permit.

(d) The city engineer shall prepare and keep on file in his office all cards and records of sewer connections showing the information obtained in the course of inspection of completed work done under the permit. (Ord. 874 § 7.0, 1962)

15.28.060 Connection—Ascertainment of permit possession.

Any employee of the city shall have the authority when finding any person breaking ground for the purpose of making connection with a public or private sewer or drain, to ascertain if such person has a permit therefor, and, if not, to immediately report the fact to the city engineer. (Ord. 3086 § 9, 1988: Ord. 874 § 8.0, 1962)

15.28.070 Construction inside property line—Permit required—Leaving excavation unguarded.

(a) It is unlawful to construct, extend, relay, repair or to make connection to any sanitary sewer or drain inside any real property without obtaining a permit from the city engineer as provided in Section 15.28.040. The city engineer may issue such permit to the owner or occupant of any property to construct, extend, relay, repair or make connection to any private sanitary sewer inside the property lines; provided, such owner or occupant shall comply with the applicable provisions of this chapter and Chapter

15.36, except that he need not employ a licensed side sewer contractor to do the work, such contractor shall take the permit in his own name and the owner, occupant or other person shall lay no pipe on the contractor's permit.

(b) It is unlawful to leave unguarded any excavation made in connection with the construction or repair of any side sewer within four feet of any public place or to fail to maintain the lateral support of any public place in connection with the construction, alteration or repair of any side sewer or drain. In any case, no excavation on private property or within public right-of-way or easements shall be left open (not backfilled) over night. (Ord. 3368 § 10 (part), 1993: Ord. 874 § 9.0, 1962)

15.28.080 Permit—Only specified work to be done.

When a permit has been issued for a side sewer as herein provided, no work other than that covered by the permit, shall be done without the approval of the city engineer; and he may, if he determines the addition works of sufficient consequence require a new permit to cover the same. (Ord. 3368 § 10 (part), 1993: Ord. 874 § 10.0, 1962)

15.28.100 Permits—Term—Renewal.

No permit issued under this chapter shall be valid for a longer period than one year unless extended or renewed by the city engineer upon application therefor prior to expiration. Failure to renew the permit prior to expiration thereof shall require the payment of a new permit fee. (Ord. 3086 § 11, 1988: Ord. 874 § 12.0, 1962)

15.28.110 Permits fee—Use.

Repealed by Ord. 4215. (Ord. 3987 § 4, 2005: Ord. 3675 § 1 (part), 1998: Ord. 3368 § 10 (part), 1993: Ord. 2639 § 1, 1981: Ord. 2586 § 2, 1981: Ord. 933 § 1, 1964: Ord. 874 § 13.0, 1962)

15.28.120 Permit card—Posting required.

The permit card required by this chapter and obtained with the side sewer permit must at all times during the performance of the work, and until the completion thereof and approval by the city engineer, be posted in some conspicuous place at or near the work and must be readily and safely accessible to the city engineer. (Ord. 3368 § 10 (part), 1993: Ord. 874 § 14.0, 1962)

15.28.130 Inspections.

(a) Any person performing work under permit pursuant to the provisions of this chapter shall notify the city engineer when the work will be ready for inspection, and shall specify in such notification the location

of the premises by address and the file number of the permit.

(b) Forty-eight hours notice plus Saturday, Sunday and holidays may be required by the city engineer on any request for inspection.

(c) If the city engineer finds the work or material used is not in accordance with this chapter, the public works standards and Chapter 15.36, he shall notify the person doing the work, and also the owner of the premises, by posting a written notice on the permit card, and such posted notice shall be all the notice that is required to be given of the defects in the work or material found in such inspection.

(d) In the case of a licensed side sewer contractor, either the contractor or a competent representative shall be on the premises, whenever so directed to meet the inspector. (Ord. 3368 § 10 (part), 1993: Ord. 874 § 15.0, 1962)

15.28.135 Side sewer ownership.

It shall be the responsibility of the property owner to own and maintain the side sewer from the connection at the main to the building. In the event that more than one property is served by a single side sewer, it shall be the responsibility of all property owners using the side sewer to jointly maintain that portion of the side sewer serving more than one property.

In any case where a jointly maintained side sewer line is approved by the city engineer, a joint maintenance agreement supplied by the department of public works shall be recorded with the King County assessors office prior to issuance of any side sewer permits for the subject properties. (Ord. 3368 § 11, 1993)

15.28.140 Filling trenches and covering sewer—Inspection prerequisite.

No trench shall be filled nor any sewer covered until the work shall have been inspected and approved by the city engineer. (Ord. 874 § 16.0, 1962)

15.28.150 Backfilling excavations.

All work within the limits of any public area shall be carried on to completion with due diligence, and if any excavation is left open beyond a time reasonably necessary to fill the same, the city engineer may cause the same to be backfilled and the public area restored forthwith, and any cost incurred in such work shall be charged to the side sewer contractor in charge of such work and shall be immediately payable to the city treasurer by the contractor upon written notification of the amount thereof given to the contractor or posted at the location. (Ord. 874 § 17.0, 1962)

15.28.160 Contractor noncompliance—Notice—Costs charged to contractor.

If any work done under a permit is not done in accordance with the provisions of this chapter and Chapter 15.36 and the plans and specifications as approved by the city engineer, and if the contractor or person doing the work refuses to properly construct and complete such work, notice of such failure or refusal shall be given to the owner or occupant of the property for whom said work is being done, and the city engineer may cause the work to be completed and the sewer connected in the proper manner, and the cost of such work and any materials necessary therefor shall be charged to the owner or contractor and be payable by the owner or contractor immediately upon the city engineer's giving written notice of the amount thereof or posting a notice thereof on the premises. (Ord. 3368 § 10 (part), 1993: Ord. 874 § 18.0, 1962)

15.28.170 Side sewer—Nonconforming or dangerous—Failure to construct or repair—Notice.

When any side sewer is constructed, laid, connected or repaired, and does not comply with the provisions of this chapter and Chapter 15.36, or where it is determined by the health officer or the city engineer that a side sewer, storm drain, septic drain field, ditch, or natural watercourse is obstructed, broken, or inadequate or is a menace to health or threatens to cause damage to public or private property, the King County health officer and/or the city engineer shall give notice to the owner, agent or occupant of the property in which such condition exists and if he refuses to reconstruct, relay, reconnect, repair or remove the obstruction of the side sewer, storm drain, septic drain field, ditch or natural watercourse within the time specified in such notice, the King County health officer shall so notify the city engineer and the city engineer may perform such work as may be necessary to comply with this chapter and Chapter 15.36, and the cost of such work so done shall be charged to the property owner or occupant and shall be come immediately payable to the city treasurer upon written notice of such amount being given to the property owner or occupant or posted upon the premises. (Ord. 3368 § 10 (part), 1993: Ord. 874 § 19.0, 1962)

15.28.180 Installation, construction and maintenance costs borne by owner.

All costs and expenses incidental to the installation and connection and maintenance of a side sewer shall be borne by the owner or occupant of the premises served by the side sewer. (Ord. 874 § 20.0, 1962)

15.28.190 Existing side sewer—Use—Approval.

The use of an existing side sewer may be permitted when approved by the city engineer as conforming to all requirements of this chapter and Chapter 15.36 for a new or converted building or new installation replacing an old one. (Ord. 874 § 21.0, 1962)

15.28.200 Lifting house drain—Backups—Backwater sewage valve.

(a) In any building, structure or premises in which a house drain or other drainage is too low to permit gravity flow to the public sewer the same shall be lifted by artificial means and discharged in the public sewer.

(b) Whenever a situation exists involving an unusual danger of backups the city engineer may prescribe a minimum elevation at which the house drain may be discharged into the public sewer. drains or sewers below such minimum elevation shall be lifted by artificial means and if directed by the city engineer a backwater sewage valve be installed. The effective operation of the backwater sewage valve shall be the responsibility of the owner of the sewer or drain. Approval of a backwater sewage valve shall be made only upon the applicant's agreeing to save the city harmless from all damage resulting therefrom in a form acceptable to the city attorney and a copy of the recorded document shall be provided to the city. (Ord. 3086 § 12, 1988: Ord. 874 § 22.0, 1962)

15.28.210 Grades—Cover—Diameter—Vault and privies.

(a) All side sewers shall be laid on a not less than two percent grade; shall be at least thirty inches from any foundation wall of any building, and, if there be no foundation wall, at least thirty inches from the outer line of any footings, pilings, or building supports; shall have at least sixty inches of cover at the curb line or any public alley, thirty inches of cover at the property line and eighteen inches of cover on the private property. A side sewer which is laid generally parallel to the curb or curb line shall have at least forty-eight inches of cover unless approved by the city engineer. All side sewer shall be at least six inches in diameter in public areas except as otherwise specified in the "Standard Plans and Specifications of the City of Kirkland." Not more than one building shall be connected to a side sewer except by permission of the city engineer and the written agreement of all owners using the same side sewer. Any one single-family residence shall be connected with at least four-inch diameter pipe and any multiple dwelling, industrial or commercial building or group of two single-family residences shall be connected with at least a six-inch diameter pipe. All cover measurements shall be based on the established curb or curb line elevation or the sidewalk or sidewalk line elevation.

(b) All vaults or privies shall be disinfected and filled with fresh pea gravel; and all septic tanks, cesspools and similar installations shall be disinfected and filled with fresh pea gravel at the time of the discontinuance of the use thereof. (Ord. 3368 § 10 (part), 1993: Ord. 3086 § 13, 1988: Ord. 874 § 23.0, 1962)

15.28.220 Downspouts.

The connection of any downspout with a sanitary sewer is hereby prohibited and declared to be unlawful. (Ord. 3086 § 14, 1988: Ord. 874 § 23.1, 1962)

15.28.230 Easements.

(a) Before any side sewer may be located on any building site other than that owned by the owner of the side sewer, the owner of the side sewer shall secure from the owner of such building site a written easement duly acknowledged covering and granting the right to occupy such property for such purpose, and such written easement shall be recorded by the owner of the sewer in the office of the county records.

(b) Before the city engineer issues a permit authorizing the laying of a side sewer on any building city other than the one served by it, the owner of the sewer shall secure from the building site owner and record with the King County records office the sewer easement herein referred to and shall exhibit to the city engineer the recording number thereof.

(c) Where a side sewer is to be connected in a public area to a side sewer which is owned by another and does not involve an easement, written permission for such connection shall be obtained from the owner of such side sewer and shall be filed with the city engineer before any permit authorizing such connection is issued.

(d) Where physical conditions render compliance with the foregoing provisions impracticable, the city engineer may issue a special permit for installation of a side sewer requiring compliance with the provisions insofar as is reasonably possible, and such permit shall be issued only upon the condition that the permittee shall record with the county auditor an instrument acceptable to the city engineer agreeing to save harmless and indemnify the city from any damage or injury resulting from such installation. (Ord. 3368 § 10 (part), 1993: Ord. 874 § 24.0, 1962)

15.28.240 Materials and workmanship—Excavations.

(a) All material and workmanship in connection with the installation of any side sewer and connection with a public sewer shall be as required by the “Standard Plans and Specifications” of the city except as to modifications or changes approved by the city engineer.

(b) Whenever it becomes necessary to disturb pavement in connection with any work authorized under this chapter and Chapter 15.36, the opening shall not be more than two and one-half feet by eight feet; provided the city engineer may specify a different size of said opening and additional cuts to be made when needed to insure a proper backfill.

(c) No excavation shall be made in any public area except at times and in the manner prescribed by the city engineer.

(d) All backfill of excavation and tunnels under concrete or asphalt surfacing and the restoration of these

surfaces in public areas shall be done by the contractor under the supervision of the city engineer.

(e) A leakage test shall be made of every section of city sewer after completion of backfill by an internal hydrostatic pressure or air test method; provided, that if the groundwater table is so high as to preclude a proper exfiltration test by adding the external pressure to the test pressure, an infiltration test may be used.

(f) Side sewers shall be tested for their maximum length possible from the public sewer in the street to the connection with the building plumbing. The method of testing side sewer shall be determined by the city, but in no case shall it be less thorough than filling the pipe with water before backfill and visually inspecting for leakage. When filling the pipe with water, a minimum of a five-foot standpipe shall be placed at the filling point. The standpipe shall be filled to the top with water unless the public works inspector determines it unnecessary.

(g) Groundwater or other water related to sewer construction, other than water used for leakage test, shall not be admitted into a public sewer. (Ord. 3368 § 10 (part), 1993: Ord. 3086 § 15, 1988: Ord. 874 § 25.0, 1962)

15.28.242 Materials.

All pipe and pipe materials will be approved by the city engineer. The city engineer shall maintain an adequate supply of copies of standards or lists of approved materials and to furnish same to all interested parties, free of charge when obtaining a sewer permit, or at cost. (Ord. 3368 § 10 (part), 1993: Ord. 3086 § 16, 1988: Ord. 2233 § 1, 1973)

15.28.250 Disturbing sewer systems unlawful.

It is unlawful to break, damage, destroy, deface, alter or tamper with any structure, appurtenance or equipment which is part of the sewer system of the city, or without authority from the city engineer to break, damage, destroy or deface any public walk, curb or pavement, or to make openings or excavations in a public area for the purpose of connection to any public or private sewer. No person, other than an authorized employee or agent of the city shall operate or change the operation of any sewer, pumping station, outfall structure or appurtenant facility. Any person who shall damage, destroy or deface any structure, appurtenance, equipment or property of the city system shall be liable for triple the actual costs of restoration or repair or triple the actual amount of any irreparable damage in addition to other penalties provided by law. (Ord. 3086 § 17, 1988: Ord. 874 § 26.0, 1962)

15.28.260 Excavations—Protection.

Any excavation shall be protected and guarded by fencing or covering and by proper lights. The

protection of the public from the danger of such excavation shall be the responsibility of the side sewer contractor; and the contractor shall be liable on his bond for any damage caused by his failure to properly protect and guard such excavation as herein required. If the contractor fails to properly protect and guard such excavation as herein reacquired, the city engineer may properly protect and guard such excavation and charge the cost thereof to the side sewer contractor, who shall upon receiving written notice of the amount of such charge or upon posting of such notice at the location of the excavation immediately pay the same to the city treasurer. (Ord. 3086 § 18, 1988: Ord. 874 § 27.0, 1962)

15.28.270 Restoration of streets and sidewalk.

All streets, sidewalks, parking strips and other public areas disturbed or altered in the course of any side sewer or drainage work, shall be restored by a licensed contractor to the original surface condition as approved by the city engineer; and in the event of the failure of the contractor to so restore the area the city engineer may make such restoration and charge the cost thereof to the side sewer contractor, who shall, upon receiving written notice of the amount thereof or upon posting of such notice on the area, make immediate payment thereof to the city treasurer. (Ord. 3086 § 19, 1988: Ord. 874 § 28.0, 1962)

15.28.280 Inspections—Authority

The city engineer or other city officials or employees of the city, bearing proper credentials and identifications, shall be permitted to enter upon any and all premises at all reasonable times for the purpose of inspection, observation, measurement, sampling and testing of sewers and sewage waste in accordance with the provisions of this chapter and Chapter 15.36; and it is unlawful for any person to prevent or attempt to prevent any such entrance or obstruct or interfere with any such officer or employee while so engaged. (Ord. 874 § 39.0, 1962)

15.28.290 Rules and regulations.

(a) The city engineer may make rules and regulations and amend the same from time to time, not inconsistent with the provisions of this chapter and Chapter 15.36, as he shall deem necessary and convenient to carry out the provisions of this chapter and Chapter 15.36. (Ord. 3086 § § 20, 21, 1988: Ord. 874 § 40.0, 1962)

Chapter 15.36
DRAINAGE AND DISCHARGE INTO SEWERS REGULATED*

Sections:

15.36.010 Waters prohibited in sanitary sewer.
15.36.020 Storm water and industrial cooling water discharge.
15.36.025 Discharge permit required.
15.36.030 Discharges prohibited.
15.36.035 Pretreatment of fats, oils and greases required.
15.36.040 Washing facilities, grease rack—Pretreatment.
15.36.045 FOG pretreatment facilities—Installation and maintenance.
15.36.050 Compliance with departmental notice.
15.36.060 Control manhole for side sewers.
15.36.070 Measurements, tests and analyses—Standards.
15.36.080 Industrial waste surcharge.
15.36.085 Excess flow surcharge.
15.36.090 *Repealed.*
15.36.100 Right of revision.
15.36.110 Entry of private property.
15.36.120 Standards for discharges and reporting—Enforcement—Penalties.

* For the statutory provisions regarding water pollution generally, see Chapter 90.48 RCW, for the water pollution within the jurisdiction of the city, see Chapter 35.88 RCW and for the public nuisance of depositing unwholesome matter in waters, see RCW 9.66.050.

15.36.010 Waters prohibited in sanitary sewer.

No one shall discharge or cause to be discharged any storm water, surface water, ground water, roof run-off, subsurface drainage, cooling water or unpolluted industrial process water to any sewer which is built solely for sanitary sewage. (Ord. 874 § 29.0, 1962)

15.36.020 Storm water and industrial cooling water discharge.

Storm water and all other unpolluted drainage shall be discharged to such sewers as are specifically designated storm sewers or to a natural outlet approved by the city engineer. Industrial cooling water or unpolluted process water may be discharged upon approval of the city engineer to a storm sewer or natural outlet, provided any such discharge meets applicable Department of Ecology (DOE) standards and METRO regulations. (Ord. 3086 § 22, 1988: Ord. 874 § 30.0, 1962)

15.36.025 Discharge permit required.

(a) It is unlawful for any person to discharge or cause to be discharged any waters or wastes into any public sewer, drain, ditch or natural outlet without a permit where required by King County wastewater treatment division, state law or federal regulations or in violation of conditions of such permit.

(b) In addition to other lawful remedies, a violator hereunder shall be liable for the costs of any damages caused by the violation. Failure to pay such costs upon demand shall be cause for revocation of service. (Ord. 3870 § 6, 2002: Ord. 3086 § 23, 1988)

15.36.030 Discharges prohibited.

It is unlawful to discharge or cause to be discharged any of the following described waters or wastes in any public sewer, drain, ditch or natural outlet:

(1) Any liquid or vapor having the temperature higher than one hundred fifty degrees Fahrenheit;

(2) Any water or waste which contains more than one hundred parts per million by weight of fat, oil or grease;

(3) Any gasoline, benzine, naphtha, oil, volatile organic or inorganic substance, or other flammable or explosive liquid, solid or gas;

(4) Any garbage that has not been properly shredded so that one hundred percent will pass a three-eighths-inch sieve and seventy-five percent will pass a one-quarter-inch sieve;

(5) Any solid or viscous substances in quantities, either by itself or in combination with other wastes, which are capable of obstructing the flow of sewer works or treatment facilities, including, but not limited to, the following: ashes, cinders, sand, mud, straw, hair, shavings, metal, glass, rags, feathers, tar, grass clippings, asphalt, seafood shells, cloth, plastic, wood, chemical residues, brewing or distilling slops, spent grain or hops, whole blood, meat trimmings and wastes, animal paunch contents, hide, hair, offal, fish or fowl heads or parts, entrails, lard, tallow, baking dough, cannery waste bulk solids, or paper or metal utensils, plastic or paper containers either whole or ground;

(6) Any water, gas, substance or wastes having a pH lower than five and five-tenths or higher than eight and five-tenths or having any other corrosive property either by itself or by interaction with other wastes capable of causing damage or hazard to structures, equipment or personnel of the sewage works;

(7) Any waters or wastes containing a toxic or poisonous substance in sufficient quantity to injure or interfere with any sewage treatment process, constitute a hazard to humans, animals, fish or fowl, or create any hazard in the receiving waters of the sewage treatment plant either by itself or by producing a

toxic vapor after interaction with other wastes. These substances include, but are not limited to, chlorinated hydrocarbons, hydrogen sulfide, sulfur dioxide, phenols, and cyanide compounds;

(8) Any waters or wastes containing suspended solids of such character and quantity that unusual attention or expense is required to handle such materials at the sewage treatment plant or wastes at a flow rate and/or pollutant discharge rate which is excessive over relatively short time periods so that there is a treatment process upset and subsequent loss of treatment efficiency;

(9) Any noxious or malodorous gas or substance which, either by itself or by interaction with other wastes, is capable of creating a hazard to life or preventing authorized personnel from entering sewage facilities;

(10) Materials from cesspools, septic tanks, and privies. Chemical toilet waste may be discharged into the city sewer or private sewer system through a side sewer connection at the place of business. Such means of disposal shall be approved by King County wastewater treatment division, the city and the Seattle-King County health department;

(11) Every building, structure or premises used or occupied by any sewer user where any commercial or industrial operations are conducted or permitted which result in the discharge into the sewer system of any products, waste products, or other substances, matter, or liquid in the manner and to the extent prohibited in this section shall be equipped with an adequate and suitable grease trap, filter or other interception device installed in such a manner that the product, waste products, or other substances, materials or liquid herein set forth will not flow into or be discharged into the sanitary sewer system. The grease trap, filter, or other interceptor shall be adequately maintained, readily accessible for inspection by the city at any time to ensure its proper operation, and is subject to terms in Section 15.36.040 of this chapter;

(12) The owner of any vehicle-washing facility shall install and maintain in a proper manner, and at his own expense, an approved grit and oil trap located in the side sewer line subject to terms in Section 15.36.040 of this chapter. (Ord. 3870 § 7, 2002: Ord. 3778 § 1, 2001; Ord. 3086 § 24, 1988: Ord. 874 § 31.0, 1962)

15.36.035 Pretreatment of fats, oils and greases required.

(a) Dischargers who operate newly constructed or remodeled restaurants, cafes, lunch counters, cafeterias, bars, or clubs; or hotel, hospital, sanitarium, factory or school kitchens; or other establishments that serve or prepare food where grease may be introduced into the sewer system shall have pretreatment facilities to prevent the discharge of fat waste, oil, or grease (FOG). Take-out food establishments or other establishments that prepare food, but do not cook in oil or grease, and who serve food only in disposable containers, may be exempted from this requirement, provided their discharges

will not violate the general discharge prohibitions of this chapter. These pretreatment facilities must be grease interceptors installed in the waste line leading from sinks, drains, or other fixtures where grease may be discharged. The grease interceptors must meet, at a minimum, the specifications of the current Uniform Plumbing Code adopted by the city at the time of construction. The city is authorized to adopt and publish additional criteria for grease interceptors. Dischargers must maintain these facilities in a manner that will always prevent fat waste, oil, or grease from being carried into the sewer system. Fat waste, oil, or grease removed from such a facility shall not be disposed of in sanitary or storm sewers.

(b) All existing restaurants, cafes, lunch counters, cafeterias, bars, or clubs; or hotel, hospital, sanitarium, factory or school kitchens or other establishments that prepare food where grease may be introduced into the sewer system which do not have a grease trap or interceptor at time of adoption of the ordinance codified in this chapter shall meet the requirements for grease, oils and fats by either installing a grease trap or interceptor or by providing a FOG management plan which shall include specific disposal practices and proof they are being adhered to no later than January 1, 2002. If any of the aforementioned businesses are sold or leased and the new owners or operators must apply for a new business license they shall be required to install or hook up to a grease removal system within six months or provide a management plan within one month of the time the business license is granted. The public works director shall approve of all management plans or installations of grease removal systems. (Ord. 3778 § 2, 2001)

15.36.040 Washing facilities, grease rack—Pretreatment.

Dischargers who operate automatic and coin-operated laundries, car washes, filling stations, commercial garages or similar businesses having any type of washing facilities or grease racks and any other dischargers producing grit, sand, oils, or other materials which have the potential of causing partial or complete obstruction of the building sewer or other areas in the sewer system shall install approved interceptors or tanks in accordance with the latest specifications adopted by the city such that excessive amounts of oil, sand and inert solids are effectively prevented from entering the city sewer. (Ord. 3778 § 3, 2001: Ord. 3086 § 25, 1988: Ord. 874 § 32.0, 1962)

15.36.045 FOG pretreatment facilities—Installation and maintenance.

All grease traps, interceptors, oil/water separators, settling tanks and grit traps shall be installed, maintained and operated by the discharger at his own expense. The installation shall be kept in continuous operation at all times, and shall be maintained to provide efficient operation. Cleaning must be performed by a service contractor qualified to perform such cleaning. All material removed shall be disposed of in accordance with all state and federal regulations. Certification of maintenance shall be made readily available to the city authorized personnel for review and inspection. If a failure to maintain settling tanks, grit traps, grease interceptors, grease traps or oil/water separators results in partial or complete blockage

of the building sewer or other parts of the wastewater utility system, adversely affects the treatment or transmission capabilities of the system, or requires excessive maintenance by the city, the discharger responsible for the facilities shall be subject to the remedies, including enforcement and penalties detailed in this chapter. (Ord. 3778 § 4, 2001)

15.36.050 Compliance with departmental notice.

It is unlawful for any person to discharge or cause to be discharged any waters or wastes into any public sewer after the department of public works has issued notice that such discharge is dangerous or interferes with the sewer system. The issuance of such notice is not required for enforcement under other provisions of this chapter. Restrictions established pursuant to this section are in addition to prohibitions otherwise established in this chapter. As examples, under this section discharge of radioactive wastes or isotopes exceeding certain concentrations might be prohibited; or any wastes containing higher than ordinary concentrations or quantities of pollutants, including, but not limited to, biochemical oxygen demanding pollutants, suspended solids, or abnormal pH and fecal material, may be required to be discharged at a specific release rate or at a specified strength so as to avoid adverse effect on proper handling and treatment. (Ord. 3086 § 27, 1988)

15.36.060 Control manhole for side sewers.

In any property served by a side sewer carrying industrial wastes when required by the city engineer, the owner or occupant shall install a control manhole in the side sewer to facilitate observation, sampling and measurement of the wastes. Such manhole shall be necessarily accessible and safely located and shall be constructed and installed in accordance with the plans approved by the city engineer. Such manhole shall be installed and maintained by the owner or occupant at his sole expense. (Ord. 874 § 34.0, 1962)

15.36.070 Measurements, tests and analyses—Standard.

All measurements, tests and analyses of the characteristics of waters and waste to which reference is made in this chapter shall be determined in accordance with the standards prescribed in “Standard Methods for the Examination of Water and Sewage,” published jointly by the American Health Association and the American Water Works Association. (Ord. 874 § 35.0, 1962)

15.36.080 Industrial waste surcharge.

The city shall charge each of its customers who are industrial recipients of waste treatment services as required by King County wastewater treatment division, in addition to the user charge, a surcharge in an amount to be determined by King County wastewater treatment division based on the average annual strength and volume of discharge by the industry. The industrial waste surcharge attributable to a

customer plus ten percent will be included in the city sewer billing for that customer as set forth in this title in addition to any service rate amounts under Section 15.24.010. (Ord. 3870 § 8, 2002: Ord. 3086 § 29, 1988)

15.36.085 Excess flow surcharge.

The city shall charge each of its customers who are recipients of waste treatment services as required by King County wastewater treatment division, in addition to the user charge, a surcharge in an amount to be determined by King County wastewater treatment division for excess flow from the customer, including inflow/infiltration. The excess flow surcharge attributable to a customer plus ten percent will be included in the city sewer billing for that customer as set forth in this title in addition to any service rate amounts under Section 15.24.010. (Ord. 3870 § 9, 2002: Ord. 3086 § 30, 1988)

15.36.090 Drainage of hard surface or graded areas.

Repealed by Ord. 4058. (Ord. 3086 § 31, 1988: Ord. 874 § 37.0, 1962)

15.36.100 Right of revision.

The city reserves the right to amend this chapter, and any permits issued under it, to provide for more stringent limitations or requirements on discharges to the wastewater utility system if such amendments are deemed necessary to comply with the objectives set forth in Section 15.36.030 of this chapter, or are otherwise in the public interest. No vested right shall be created by the issuance of any permit under this chapter. (Ord. 3778 § 5, 2001)

15.36.110 Entry of private property.

The city or its representative, bearing proper credentials and identification, shall be permitted to enter upon all and any premises at all reasonable times for the purpose of inspection, observation, measurement, sampling, testing of sewers and sewage, and performance of all other acts or duties required within the provisions of this chapter. (Ord. 3778 § 6, 2001)

15.36.120 Standards for discharges and reporting—Enforcement—Penalties.

(a) Those dischargers subject to national pretreatment standards will be subject to enforcement action in accordance with this chapter for any violations of the criteria and limitations specified in the categorical standard or the general pretreatment standards set forth in 40 CFR 403, as currently written or hereafter amended, which standards are hereby adopted by reference.

(b) Maximum Daily Concentration Allowed. The maximum daily allowable concentration for dischargers

not regulated under national pretreatment standards is violated under the following circumstances:

(1) The arithmetic mean of concentrations for eight consecutive samples collected within a twenty-four-hour time period over intervals of fifteen minutes or greater is in excess of the limitation.

(2) The concentration value obtained from a composite sample that is representative of the twenty-four-hour discharge is in excess of the limitation.

(3) The concentration of any single sample (whether a single grab sample or a sample within a series) exclusive of any fats, oils, and grease exceeds the limitation by a factor of two and one-half times.

(4) The arithmetic mean of the concentration of fats, oils, or greases for three grab samples, taken no more frequently than five-minute intervals, exceeds the limitation.

(c) Maximum Allowable Poundage Limitations. A violation shall occur if the maximum allowable effluent poundage limitation as established in the private wastewater discharge permit is exceeded. The daily poundage discharged shall be calculated using the volume of effluent discharged that day times the concentration for that day either reported by the discharger or obtained through sampling by the city. The poundage shall be determined utilizing the formula:

Lb./day = conc. in mg/L x
gal./day disch./1,000,000
x 8.34

(d) Reporting Requirements. A violation shall occur if any reporting requirements established by permit, accidental discharges, upset conditions, written request of the city or authorized representative, or as specified by general pretreatment standards (40 CFR 403.12) are not complied with. A violation shall occur when any person knowingly makes any false statement, representation, or certification in an application, record, report, plan or other document filed or required to be maintained pursuant to this chapter, or who falsifies, tampers with, or knowingly renders inaccurate any monitoring device or method required under this chapter.

(e) “FOG” Pretreatment Facility—Maintenance. A violation shall occur if there is any failure to install or maintain grease or grit interceptors, oil/water separators or other required FOG control devices. The lack of any device to prevent discharge of grease, oil, fats, sand, gravel or any other materials which will cause excessive maintenance of the sewer lines shall not relieve the discharger of the responsibility of liability for any costs to city for excessive maintenance and/or other costs incurred by the city.

(f) Discharge of Dangerous Waste. A violation shall occur if any material listed on the discharge chemical products list of the state of Washington (WAC 173-303-9903) is discharged into any public sewer or building sewer tributary thereto.

(g) Explosion Meter Readings. A violation shall occur if the reading on an explosion meter at any point in the collection system or wastewater treatment plant is greater than ten percent for a single reading or greater than five percent for two successive readings.

(h) Termination of Treatment Services—Permit Revocation. The city shall have the authority to terminate wastewater treatment services of the discharger and revoke any permit issued if it determines that the discharger has:

(1) Failed to accurately report wastewater constituents and characteristics more than once; or

(2) Failed to report significant changes in wastewater constituents, characteristics, flow volumes or types of discharge to the wastewater treatment plant; or

(3) Refused reasonable access to the discharger's premises for purposes of inspection or monitoring; or

(4) Violated conditions of the wastewater discharge permit; or

(5) Violated any of the provisions of this chapter, regulations promulgated hereunder, state law or federal law; or

(6) Violated any lawful order of the city issued with respect to the discharger's permit or this chapter; or

(7) Tampers with, disrupts, damages or renders inaccurate any wastewater monitoring device required by this chapter.

(i) Other Violations.

(1) If reports required by permit, this chapter or state or federal pretreatment regulations are submitted later than thirty days after they are due, the discharger shall be subject to civil penalties as set forth in Section 5.74.040. In the event the reports have not been submitted at the time the maximum penalty is imposed, the city shall seek remedies under subsection (h) of this section.

(2) If any of the actions prescribed in any compliance schedule established by permit or by order of the city are not complete within thirty days of the time they are required to be complete, the discharger shall be subject to civil penalties as set forth in Section 5.74.040. In the event the actions have not been completed ninety days after the date scheduled in the permit or order, the city shall

seek remedies under subsection (h) of this section.

(3) If a discharger fails to maintain grease, oil and/or sand removal systems, which results in the city having to perform the maintenance of the collection system or treatment plant, the discharger shall be subject to the applicable civil penalty set forth in Section 5.74.040, which shall be added to the costs incurred by the city to perform the maintenance. If the city must perform any maintenance for that discharger a second time within a three-year period, the penalty shall be the applicable civil penalty set forth in Section 5.74.040, which shall be added to the costs of maintenance by the city. In the event the city having to perform any maintenance for that discharger continues, the city shall seek remedies under subsection (h) of this section.

(4) Failure to provide accurate or complete information on any wastewater discharge reports or the requirements of a discharge permit shall result in a civil penalty as set forth in Section 5.74.040. Thereafter, the discharger shall be subject to remedies under subsection (h) of this section.

(5) In addition to the assessments described in this section, any costs incurred by the city, including but not limited to attorney's fees, shall be added to the total amount of the civil penalty assessment.

(j) Enforcement Process and Appeals.

(1) In the event the city determines there is a violation of this chapter, the public works director, or his or her designee, shall issue a written notice of civil infraction to the discharger with the following information:

(A) The name and address of the person(s) responsible for the violation;

(B) The street address or description of the property where the violation is occurring;

(C) A description of the violation and a reference to the provision of this chapter which has been violated;

(D) The required corrective action and a date and time by which the correction must be completed;

(E) A statement of the fines for failure to comply with the notice of civil infraction by the stated compliance date.

(2) The notice of civil infraction shall be personally served or sent by regular and certified mail to the discharger's address.

(3) The discharger may appeal the issuance of the notice of civil infraction by submitting a written appeal to the city no later than fourteen days after receipt of the notice of civil infraction.

(4) Appeals shall be heard by the hearing examiner pursuant to the process set forth in Section 1.12.050; provided, that the hearing shall be conducted as an appeal from the notice of civil infraction issued under this chapter.

(5) If the discharger does not complete corrective action or file an appeal of the notice of civil infraction within fourteen days after receipt of the notice of civil infraction, the city shall assess fines against the violator. The fines assessed are set forth in Section 5.74.040; provided, that if that section does not specify a fine for a particular violation, the fine shall be one hundred dollars per day for a maximum of sixty days.

(6) A discharger against whom fines are assessed for failure to maintain approved FOG pretreatment facilities may apply to the department of public works to offset the amount of the fines assessed against the cost of installing approved FOG pretreatment facilities. As part of the application, the discharger shall submit proof of the cost incurred in installing the approved FOG pretreatment facilities. The complete offset application must be filed with the city within forty-five days of the hearing examiner decision (if there is an appeal) or within forty-five days of expiration of the applicable appeal period (if there is no appeal). The director of public works, or his or her designee, shall review the application and the installation to ensure that the required FOG pretreatment facilities have been properly installed. If so, the director shall grant the offset in the amount of the documented installation costs; provided, that the amount of the offset shall not exceed the amount of the assessed fines. (Ord. 4432 § 1, 2014: Ord. 4215 § 10, 2009: Ord. 3778 § 7, 2001)

Chapter 15.38
SEWER MAIN EXTENSIONS

Sections:

15.38.010 Connection requests.
15.38.020 Extension charge—Payment required.
15.38.030 Extension charge—Established.
15.38.040 Administrative procedures.

15.38.010 Connection requests.

The owner of an existing single-family or multifamily dwelling within the Kirkland sewer system service area, having a failed or failing septic tank system, may request to connect to the public sewer system, even though such property may be located more than three hundred thirty feet from an existing sewer main (requiring construction of a sewer main extension in order to be connected). Whenever construction of a sewer main extension is required to make such connection possible, the city shall plan, design and construct such extension within a reasonable time pursuant to the criteria for sewer main extension projects and construction priorities authorized by Section 15.38.040 of this chapter. Upon completion of construction and acceptance of the sewer main extension, the city shall:

(1) Give notice to the requesting property owner to connect the property to the public sewer system within thirty days of receipt of the notice; and

(2) Give notice to other property owners benefited by the extension construction to connect the property to the public sewer system within thirty days of receipt of the notice; provided, that in lieu of connection, such property owners may delay connection of the property and payment of the extension charge pursuant to Section 15.38.030 and/or the sewer capital facilities charge pursuant to Section 15.12.063 (SCFC) by executing a written request and authorization, in a form approved by the director of public works in accordance with Section 15.38.040, that requests delay of connection and payment and that acknowledges filing of the document described in Section 15.38.030(c) and creation of the lien of Section 15.38.030(d)(5). The department of public works shall record the written request with the King County office of records and elections. (Ord. 4319 § 1, 2011: Ord. 4032 § 1, 2006: Ord. 3638 § 1, 1998)

15.38.020 Extension charge—Payment required.

Any single-family or multifamily dwelling connecting to the public sewer after the effective date of the ordinance codified in this chapter shall, as required by Section 15.08.041 of this code and, in addition to the capital facilities charge required by Section 15.12.063 of this code and the side sewer charge required by Section 15.12.060 of this code, pay to the city the extension charge established in Section 15.38.030 of this chapter. (Ord. 3638 § 2, 1998)

15.38.030 Extension charge—Established.

(a) The city shall collect sewer extension charges from owners of properties which individually benefit from publicly built sewer extension facilities constructed after adoption of the ordinance codified in this chapter, except property owners who previously paid their fair share of such an extension through or a LID or ULID. Facilities that may be covered in an extension charge include, but are not limited to, stubs built from the sewer main to the property line, pump stations and sewer main extensions which bring the sewer main to the farther boundary of the property.

(b) The extension charge is the property owner's equitable share of the established costs of the facilities extension from which the property owner benefits. The equitable share shall include interest charges applied from the date of construction acceptance of the sewer extension until the property connects, at a rate commensurate with the rate of interest established in subsection (d)(3) of this section, as applicable at the time of construction of the facility to which the property owner is seeking to connect.

(c) The extension facilities cost shall be allocated to benefiting property owners based on the number of residential customer equivalents. For the purposes of this chapter, "residential customer equivalents" means the number of dwelling units existing on a lot or parcel of land as of the date of construction acceptance of the sewer extension to which the property will be connected or a vacant lot or parcel of land of reasonable residential lot size as determined by the director of public works pursuant to Section 15.38.040 of this chapter. At completion of each extension construction project the department of public works shall record, with the King County office of records and elections, a document which identifies the project and includes a statement of total construction cost, the amount of such cost per residential customer equivalent, a legal description of each lot or parcel of land benefited and the amount of the extension charge allocable for each lot or parcel so described.

(d) The extension charge and the SCFC shall be payable to the city as follows:

(1) For a requesting property owner and for other property owners who do not execute a written request and authorization to delay payment of the extension charge and/or the SCFC, upon receipt of the thirty-day notice to connect pursuant to Section 15.38.010; or

(2) For other property owners who execute a written request and authorization to delay payment of the extension charge and/or the SCFC pursuant to Section 15.38.010, upon connection of the property to the public sewer system pursuant to Section 15.28.010, or ten years following acceptance of the construction of the extension, whichever occurs first; or

(3) The city may enter into contracts with the owners of existing single-family residences, multifamily residences and businesses that meet criteria specified by the department of public works for payment of

extension charges and/or the SCFC over ten successive years instead of as a lump sum. In addition to the installment payment on the extension charge and/or the SCFC principal, each time payment shall include an administrative handling fee to be established by the finance director, together with interest on the unpaid balance of the extension charge and/or the SCFC principal at a rate to be set quarterly on the first working day of the quarter by the finance director, which shall not exceed ninety-five percent of the market yield to maturity of the most recently issued U.S. Treasury note. The interest rate and administrative handling fee to be set quarterly shall remain in effect for said contracts for the term of the contract. The interest rate shall be set quarterly for time payment contracts entered into during that current year. The contract shall provide that the first annual payment shall be payable as of July 1st following connection with the remaining payments due on July 1st of each successive year.

(4) Notwithstanding the foregoing, the entire amount of the extension charge and the SCFC or any remaining unpaid balance thereof shall be payable in full at the time of closing upon sale of the property, or upon refinancing of the property unless the owner requests that the city waive its right to collect this charge out of the refinance proceeds, whether or not the property has been connected to the sewer extension.

(5) Pursuant to RCW 35.67.360, the extension charge and/or the SCFC or any unpaid balance of the time payment contract shall be secured by a lien against the connecting property. The lien shall attach as of the date of recording of the document required to be recorded by the department of public works by subsection (c) of this section and continue thereafter until the extension charge and/or the SCFC or any unpaid balance of the time payment contract has been fully paid. (Ord. 4319 § 2, 2011: Ord. 4032 § 2, 2006; Ord. 3697 § 1, 1999; Ord. 3666 § 1, 1998; Ord. 3638 § 3(1) – (4), 1998)

15.38.040 Administrative procedures.

The director of public works is authorized to adopt administrative procedures for the purpose of administering the provisions of this chapter, including establishment of criteria for sewer main extension projects and construction priorities. (Ord. 3638 § 3(5), 1998)

Chapter 15.40
OFFENSES

Sections:

15.40.010 Tampering with fire hydrant.
15.40.020 Excavation—Permission required.
15.40.030 Tampering with water system.
15.40.040 Use of fire protection facilities.
15.40.050 Connection between private and city water or sewer system.
15.40.060 Violation—Liability for expenses.
15.40.070 Impeding drainage ditches with debris.
15.40.080 Planting trees and shrubs near sewer—Removal.
15.40.090 Issuance of public works stop work order.

15.40.010 Tampering with fire hydrant.

It is unlawful for any person, except when duly authorized by the public works director or by a member of the fire department, to open, operate, close, turn on, turn off, interfere, attach any pipe or hose to, or to connect anything with any fire hydrant, stop valve, or stop cock belonging to the city. (Ord. 3368 § 12 (part), 1993: Ord. 2062 § 7, 1969)

15.40.020 Excavation—Permission required.

It is unlawful for any person to dig into any street or sidewalk for the purpose of laying, moving or repairing any water service line, water main, valve, hydrant, or cock, without having first secured permission to do so from the public works director and obtaining the necessary permits. (Ord. 3368 § 12 (part), 1993: Ord. 2062 § 7.02, 1969)

15.40.030 Tampering with water system.

It is unlawful for any person to bypass any water meter, damage or tamper with such meter with intent to prevent or alter its recording of water, tap a water line, connect to a water hydrant or in any other way tamper with any part of the water system with the intent to secure water without paying therefor or without properly making the application or paying the deposit required by this title. In addition to the other penalties for such acts provided by this title, or any person found guilty of such acts may be denied water service for a period of not in excess of one year, and may be required to post a cash bond equal to five times his ordinarily anticipated bimonthly billing as a precondition of future service. (Ord. 2062 § 7.03, 1969)

15.40.040 Use of fire protection facilities.

It is unlawful for any person to use or permit the use of fire protection facilities installed pursuant to Section 15.24.060 for any purpose other than fire protection. (Ord. 2062 § 7.05, 1969)

15.40.050 Connection between private and city water or sewer system.

It is unlawful for any person to make any physical connection between a private water supply system and the city water system. It is unlawful for any person to make any physical connection between a private sewer connection system and the city sewer system. It is unlawful for any person having the right to possession or control of any such private system to permit or allow the physical connection of such private system to the city system. (Ord. 2062 § 7.06, 1969)

15.40.060 Violation—Liability for expenses.

Any person who violates any of the provisions of this title shall be liable to the city for any expense, loss or damage occasioned by the city by reason of such violation. (Ord. 2062 § 7.07, 1969)

15.40.070 Impending drainage ditches with debris.

It is unlawful for any persons in the city to put or allow to be placed in any of the drainage ditches in and for the city any grass cuttings, paper, debris, or foreign substance of any kind or character whatsoever, so as to in any way impede the flow of water in the drainage ditches. (Ord. 504 § 1, 1945)

15.40.080 Planting trees and shrubs near sewer—Removal.

(a) It is unlawful to plant, within thirty feet of any public sewer, any willow, poplar, cottonwood, soft maple, gum trees, or any other tree or shrub whose roots are likely to enter and obstruct the flow of said sewers.

(b) The city engineer is authorized to remove any trees or shrubs from any public street or the roots of any trees or shrubs which extend into any public street when such trees or shrubs or the roots thereof are obstructing or are liable to obstruct any public or private sewer or drainage. Before making any such removal the city engineer shall give ten days' notice, in writing, to the owner or occupant of the abutting property or the property on which such trees or shrubs are growing, requiring such owner or occupant to remove the same. If the written notice cannot be given such owner or occupant the notice may be posted on the premises or in the street at the location of the trees or shrubs requiring such removal. If such owner or occupant fails or refuses to remove such trees or shrubs and roots within the time specified, the city engineer is authorized to do so and the cost of removal thereof shall be charged to the owner or occupant and upon giving such written notice of the amount thereof to the owner or occupant or by posting such notice at the location of the trees or shrubs, the cost thereof shall be immediately payable to the city treasurer by such owner or occupant. (Ord. 3368 § 12 (part), 1993: Ord. 874 § 38.0, 1962)

15.40.090 Issuance of public works stop work order.

(a) The director of the public works department and any employee of the department to whom the authority herein established has been delegated in writing by the director, shall have the authority to order immediate cessation of any work or other activity then being performed within or upon any public right-of-way or public easement, or within or upon any property which upon completion of the work or activity is to be conveyed or dedicated as public right-of-way or public easement. Such authority may be exercised only when it appears that such work is being performed either without a contract so to do with the city or prior to the issuance of any city permit required to be issued for such work or activity or when it appears that such work or activity is being performed in a manner which is in violation of the special conditions or the regulatory performance standards under which such permit was issued.

(b) The order for immediate cessation of work shall be given by posting in a conspicuous location upon the subject property a stop work order substantially in the following form:

CITY OF KIRKLAND
DEPARTMENT OF PUBLIC WORKS
123 5TH AVENUE
KIRKLAND, WASHINGTON 98033

ALL PERSONS ARE HEREBY ORDERED AT ONCE TO
STOP WORK
PERTAINING TO CONSTRUCTION, ALTERATION, REPAIR, GRADING, PAVING OR OTHERWISE DISTURBING OR OBSTRUCTING THE PREMISES

ON THESE PREMISES AT _____ _____. THIS ORDER IS ISSUED BECAUSE _____ _____ KIRKLAND MUNICIPAL CODE CHAPTER 15.40.090 POSTED _____ A.M./P.M. _____, 19____.
BY: _____

WARNING: THE FAILURE TO STOP WORK, RESUMPTION OF WORK WITHOUT PERMISSION OF THE PUBLIC WORKS OFFICIAL, OR REMOVAL, MUTILATION, DESTRUCTION OR CONCEALMENT OF THIS NOTICE IS PUNISHABLE BY FINE AND IMPRISONMENT. EACH DAY OF CONTINUED VIOLATION MAY BE CONSIDERED A SEPARATE OFFENSE.

(c) It is unlawful for any person to continue the work or activity, to resume the work or activity, or to commence any new work or activity on any site posted with a stop work order until such time as the director of public works or his delegate has removed or authorized the removal of said stop work order. It

shall be unlawful for any person other than the director of public works or his delegate to remove from the site a stop work order once posted pursuant to this chapter. Violation of any provision of this section shall be a misdemeanor. (Ord. 3368 § 13, 1993)

Chapter 15.44
SANITARY SEWER
COMPREHENSIVE PLAN

Sections:

15.44.010 Purpose—Area affected.
15.44.020 Adoption by reference.
15.44.030 Copies on file.

15.44.010 Purpose—Area affected.

The purpose of this chapter is to adopt a sanitary sewer collection, disposal and facilities comprehensive plan for the city sanitary sewer service area, lying within the city limits. (Ord. 3368 § 14 (part), 1993: Ord. 2796 § 1, 1984)

15.44.020 Adoption by reference.

(a) The sanitary sewer comprehensive plan prepared, published and recommended by the Kirkland department of public works under the title “City of Kirkland Comprehensive Sewer System Plan” dated April 1993, including worded text, maps, attachments and appendices thereto are by this reference adopted as the sanitary sewer comprehensive plan for the Kirkland sanitary sewer service area.

(b) Said publication has been endorsed with the title and number of the ordinance codified in this chapter, dated and signed by the mayor, attested to by the director of administration and finance (ex officio city clerk) and is incorporated herein as a part of this chapter.

(c) The comprehensive sanitary sewer plan heretofore adopted for the Kirkland sanitary sewer service area by this section of the Kirkland Municipal Code is amended and supplemented as set forth in Exhibit A attached to the ordinance codified in this subsection, and by this reference incorporated herein. Exhibit A dated April 1993, was prepared, published and recommended by the Kirkland department of public works.

(d) A copy of the ordinance codified in subsection (c) and this subsection (d) including Exhibit A shall be recorded in the office of the city clerk and copies shall be filed in the following city departments for the use of the general public and the affected departments of the city: department of public works, building department, department of planning and community development. Copies shall also be filed with such other local, county and state agencies as may be required by law. (Ord. 3573 § 70, 1997; Ord. 3368 § 14 (part), 1993: Ord. 2888 §§ 1, 2, 1985; Ord. 2796 § 2 (part), 1984)

15.44.030 Copies on file.

A copy of said publication shall be recorded in the office of the city clerk as a part of this chapter, and copies shall be filed in the following city departments for use of the general public and the affected departments of the city: department of public works, building department, department of planning and community development. Copies shall also be filed with such other local, county and state agencies as may be required by law. (Ord. 3573 § 71, 1997: Ord. 3368 § 14 (part), 1993: Ord. 2796 § 2 (part), 1984)

Chapter 15.48
COMPREHENSIVE WATER PLAN

Sections:

15.48.010 Purpose.
15.48.020 Adoption by reference.
15.48.030 Severability clause.
15.48.040 SEPA compliance.

15.48.010 Purpose.

The purpose of this chapter is to adopt, consistent with the Kirkland Comprehensive Plan and Section 248-54-580, Washington Administrative Code, a comprehensive water plan for the city water service area lying within the city of Kirkland and including all water distribution facilities of the Kirkland water system within the service area. (Ord. 3368 § 15 (part), 1993: Ord. 2838 § 1, 1984)

15.48.020 Adoption by reference.

The comprehensive water plan prepared, published and recommended by the Kirkland department of public works under the title “City of Kirkland Comprehensive Water Plan” dated November 16, 1984, including the worded text and maps are by this reference adopted as the city of Kirkland comprehensive water plan for the Kirkland water system service area as described in Section 15.48.010 of this chapter.

The publication has been endorsed with the title and number of the ordinance codified in this chapter, dated and signed by the mayor, attested to by the director of administration and finance (ex officio city clerk) and is incorporated in this chapter as a part of the ordinance codified in this chapter.

A copy of the publication shall be recorded in the office of the city clerk as a part of this chapter, and copies shall by filed in the following city departments for the use of the general public and the affected departments of the city: department of public works, building department, department of planning and community development and the department of fire services. Copies shall also be filed with those departments or agencies of the state of Washington as may be required by Section 248-54-580 Washington Administrative Code. (Ord. 3573 § 72, 1997: Ord. 3368 § 15 (part), 1993: Ord. 2838 § 2, 1984)

15.48.030 Severability clause.

If any section, subsection, sentence, clause, phrase, part or portion of the ordinance codified in this chapter, including those portions adopted by reference, is for any reason held to be invalid or unconstitutional by any court of competent jurisdiction, such decision shall not affect the validity of the remaining portions of this chapter. (Ord. 2838 § 3, 1984)

15.48.040 SEPA compliance.

An environmental checklist was submitted on the recommended comprehensive water plan adopted by the ordinance codified in this chapter. The responsible official evaluated this proposal and issued a declaration of nonsignificance on October 12, 1984. This environmental information was made part of the record and accompanied the proposal and recommendation during its consideration by the city council. (Ord. 2838 § 4, 1984)

Chapter 15.52
SURFACE WATER MANAGEMENT

Sections:

Article I. Surface Water Utility Purpose
and Responsibilities

15.52.010 Surface water utility created—Responsibilities.
15.52.020 Purpose.
15.52.030 Comprehensive drainage and storm sewer plan.
15.52.040 Work contracted out.

Article II. Requirements for
Development Activities

15.52.050 Applicability—Storm water plan required.
15.52.060 Design and construction standards and requirements.
15.52.070 City acceptance of new storm water facilities.
15.52.080 Bonds and irrevocable license to enter.

Article III. Water Quality and Flood Protection

15.52.090 Illicit discharges and connections.
15.52.100 Source control best management practices.
15.52.110 Water quality standards.
15.52.120 Operation and maintenance of storm water facilities.

Article IV. Inspection and Enforcement

15.52.130 Inspection and sampling.
15.52.140 Enforcement, violations and penalties.
15.52.150 Conflicts.
15.52.160 Severability.

Article I. Surface Water Utility Purpose
and Responsibilities

15.52.010 Surface water utility created—Responsibilities.

There is hereby created and established, pursuant to Chapters 35A.80 and 35.67 RCW, a storm and surface water utility to be known as the “Kirkland surface water utility.” All references to “the utility” in this

chapter refer to the Kirkland surface water utility. The utility will have primary authority and responsibility for carrying out the city's comprehensive drainage and storm sewer plan, including responsibilities for planning, design, construction, use, maintenance, inspection, administration, and operation of all city storm and surface water facilities; establishing standards for design, construction, and maintenance of improvements on private property where these might affect storm and surface water management; and to establish programs and regulations to assure the quality of the water in such systems, to minimize the chance of flooding, and to provide for the enforcement of the provisions of this code. The director of public works shall be the administrator of the utility. The administrator of the utility shall formulate and propose to the city council for adoption by ordinance a system of rates and charges for services of the utility. To the extent required by law, rates charged shall be uniform for the same class of customers or services. (Ord. 3711 § 4 (part), 1999)

15.52.020 Purpose.

The city council finds that this chapter is necessary to promote sound development policies and construction procedures which respect and preserve the city's watercourses; to minimize water quality degradation and control of sedimentation of creeks, streams, ponds, lakes, and other water bodies; to protect the life, health, and property of the general public; to preserve and enhance the suitability of waters for contact recreation and fish habitat; to preserve and enhance the aesthetic quality of the waters; to maintain and protect valuable ground water quantities, locations, and flow patterns; to insure the safety of city roads and rights-of-way; and to decrease drainage-related damages to public and private property. (Ord. 3711 § 4 (part), 1999)

15.52.030 Comprehensive drainage and storm sewer plan.

A comprehensive drainage and storm sewer plan shall be developed by the city for review and adoption by the city council. Such a plan may include basin-specific or city-wide recommendations for regulations, procedures, and programs. Such regulations, procedures and programs may include but are not limited to capital projects, public education and enforcement activities, operation and maintenance of city storm and surface water facilities, and land use management regulations to be recommended for adoption by ordinance for managing surface and storm water management facilities. Once adopted by the city council, elements of the comprehensive drainage and storm sewer plan pertaining to new development and redevelopment projects shall be incorporated into the standard plans. (Ord. 3711 § 4 (part), 1999)

15.52.040 Work contracted out.

The director of public works may arrange to have work that would be done by the utility performed by a private party or contracted out when it is determined that it would be economically beneficial to do so. (Ord. 3711 § 4 (part), 1999)

Article II. Requirements for Development Activities

15.52.050 Applicability—Storm water plan required.

All developers taking any of the following actions or applying for any of the following permits and/or approvals will be required to submit for approval a storm water plan with their application and/or request, unless exempted by the city engineer or his designee. The storm water plan shall include those items designated in the public works standard plans. Work on the site can only be allowed after approval of the storm water plan.

(1) Creation or alteration of new or additional impervious surfaces;

(2) New development;

(3) Redevelopment;

(4) Building permit;

(5) Subdivision approval;

(6) Short subdivision approval;

(7) Commercial, industrial, or multifamily site plan approval;

(8) Planned unit development;

(9) Development within or adjacent to critical areas;

(10) Rezones;

(11) Conditional use permit;

(12) Substantial development permit required under Chapter 90.58 RCW (Shoreline Management Act);

(13) Land surface modification permit. (Ord. 3711 § 4 (part), 1999)

15.52.060 Design and construction standards and requirements.

(a) The standard plans as defined in Section 15.04.340 shall include requirements for temporary erosion control measures, storm water detention, water quality treatment and storm water conveyance facilities that must be provided by all new development and redevelopment projects. These standards

shall meet or exceed the thresholds, definitions, minimum requirements, and exceptions/variances criteria found in Appendix I of the Western Washington Phase II Municipal Stormwater Permit, the 2009 King County Surface Water Design Manual, and the City of Kirkland Addendum to the 2009 King County Surface Water Design Manual as presently written or hereafter amended.

(b) Unless otherwise provided, it shall be the developer's and property owner's responsibility to design, construct, and maintain a system which complies with the standards and minimum requirements as set forth in the standard plans.

(c) In addition to providing storm water quality treatment facilities as required in this section and as outlined in the standard plans, the developer and/or property owner shall provide source control best management practices as described in Volume IV of the 2005 Stormwater Management Manual for Western Washington, such as structures and/or a manual of practices designed to treat or prevent storm water pollution arising from specific activities expected to occur on the site. Examples of such specific activities include, but are not limited to, carwashing at multifamily residential sites and oil storage at auto repair businesses.

(d) Privately maintained storm water structures are not allowed within the public right-of-way, except on a case by case basis with approval from the public works director.

(e) The city will inspect all permanent storm water facilities prior to final approval of the relevant permit. All facilities must be clean and fully operational before the city will grant final approval of the permit. A performance bond may not be used to obtain final approval of the permit prior to completing the storm water facilities required under this chapter.

(f) Adjustment Process. Any developer proposing to adjust the requirements for, or alter design of, a system required as set forth in the standard plans must follow the adjustment process as set forth in the standard plans.

(g) Other Permits and Requirements. It is recognized that other city, county, state, and federal permits may be required for the proposed action. Further, compliance with the provisions of this chapter when developing and/or improving land may not constitute compliance with these other jurisdictions' requirements. To the extent required by law, these other requirements must be met. (Ord. 4351 § 1, 2012: Ord. 4214 § 1, 2009: Ord. 3711 § 4 (part), 1999)

15.52.070 City acceptance of new storm water facilities.

(a) The city will release the maintenance bond and accept for maintenance new residential storm water facilities constructed under an accepted permit as listed in Section 15.52.050 that meet the following conditions:

(1) An inspection by the director or designee has determined that the storm water facilities are functioning as designed;

(2) The storm water facilities have had at least two years of satisfactory operation and maintenance;

(3) The storm water facility, as designed and constructed, conforms to the provisions of the chapter;

(4) All easements and tract dedications required by this chapter, entitling the city to properly access, operate and maintain the subject drainage facility, have been recorded with the King County office of records and elections, and a copy has been conveyed to the city;

(5) Agreements between the property owner and maintenance contractor, if required, have been submitted to and approved by the city;

(6) For nonstandard drainage and water quality facilities, an operation and maintenance manual, including a schedule detailing the suggested seasonal timing and frequency of maintenance, has been submitted to and accepted by the city;

(7) A complete and accurate set of reproducible mylar as-builts, computer files of plans, and microfiche of plans has been received and accepted by the city.

(b) City Acceptance of New Nonresidential Storm Water Facilities. The city will release the maintenance bond for new nonresidential storm water facilities that meet all except items (4) and (6) in subsection (a) of this section. (Ord. 3711 § 4 (part), 1999)

15.52.080 Bonds and irrevocable license to enter.

(a) Prior to commencing construction on any project disturbing greater than one thousand square feet of land area that meet conditions for a sensitive site as set forth in the standard plans, the applicant must post an erosion control bond using the same procedures as provided in Chapter 175 KZC. The nature of the bond must permit the city to obtain the proceeds of the bond immediately upon request.

(1) The bond must be in an amount sufficient to cover the cost of corrective work on or off the site performed specifically for the given project. Before the city releases the bond, the applicant must do the following:

(A) Construct drainage facilities required in the storm water plan;

(B) Receive final approval of the storm water system from the city of Kirkland; and

(C) Pay all required fees.

(2) All applicants shall post a maintenance bond using the same procedures as provided in Chapter 175 KZC to ensure maintenance of installed storm water facilities for two years from the date of final approval of the storm water facilities. Before the city will release the bond, the storm water facilities must meet the requirements of Section 15.52.070.

(b) Prior to final approval of the storm water facilities, the property owner of all nonresidential storm water facilities shall submit, as described in Chapter 175 KZC, an irrevocable license to enter the property for the purposes of inspection. The following language must be included in the irrevocable license to enter:

(1) A statement that the property owner is to be responsible for the maintenance of storm water facilities on the property;

(2) A statement granting the director or designee the right to enter the property for the purposes of inspecting the storm water facilities; and

(3) A statement that the director shall have the authority to order repair or cleaning of the storm water facilities if the owner does not take action to conduct this work or if the site poses a threat to public health and safety. (Ord. 3711 § 4 (part), 1999)

Article III. Water Quality and Flood Protection

15.52.090 Illicit discharges and connections.

(a) Prohibition of Illicit Discharges. No person shall throw, drain, or otherwise discharge, cause or allow others under its control to throw, drain or otherwise discharge into the municipal storm drain system and/or surface and ground waters any materials other than storm water. Illicit discharges are prohibited and constitute a violation of this chapter. Examples of prohibited contaminants include, but are not limited to, the following:

(1) Trash or debris.

(2) Construction materials.

(3) Petroleum products including but not limited to oil, gasoline, grease, fuel oil and heating oil.

(4) Antifreeze and other automotive products.

(5) Metals in either particulate or dissolved form.

(6) Flammable or explosive materials.

(7) Radioactive material.

(8) Batteries.

(9) Acids, alkalis, or bases.

(10) Paints, stains, resins, lacquers, or varnishes.

(11) Degreasers and/or solvents.

(12) Drain cleaners.

(13) Pesticides, herbicides, or fertilizers.

(14) Steam cleaning wastes.

(15) Soaps, detergents, or ammonia.

(16) Swimming pool or spa filter backwash.

(17) Chlorine, bromine, or other disinfectants.

(18) Heated water.

(19) Domestic animal wastes.

(20) Sewage.

(21) Recreational vehicle waste.

(22) Animal carcasses.

(23) Food wastes.

(24) Bark and other fibrous materials.

(25) Lawn clippings, leaves, or branches.

(26) Silt, sediment, concrete, cement or gravel.

(27) Dyes.

(28) Chemicals not normally found in uncontaminated water.

(29) Any other process-associated discharge except as otherwise allowed in this section.

(30) Any hazardous material or waste not listed above.

(b) Allowable Discharges. The following types of discharges shall not be considered illicit discharges for the purposes of this chapter unless the director determines that the type of discharge, whether singly or in combination with others, is causing or is likely to cause pollution of surface water or groundwater:

(1) Diverted stream flows.

(2) Rising ground waters.

(3) Uncontaminated ground water infiltration – as defined in 40 CFR 35.2005(20).

(4) Uncontaminated pumped ground water.

(5) Foundation drains.

(6) Air conditioning condensation.

(7) Irrigation water from agricultural sources that is commingled with urban storm water.

(8) Springs.

(9) Water from crawl space pumps.

(10) Footing drains.

(11) Flows from riparian habitats and wetlands.

(12) Discharges from emergency fire fighting activities.

(c) Conditional Discharges. The following types of discharges shall not be considered illicit discharges for the purpose of this chapter if they meet the stated conditions, or unless the director determines that the type of discharge, whether singly or in combination with others, is causing or is likely to cause pollution of surface water or groundwater:

(1) Potable water, including water from water line flushing, hyperchlorinated water line flushing, fire hydrant system flushing, and pipeline hydrostatic test water. Planned discharges shall be dechlorinated to a concentration of 0.1 ppm or less, pH-adjusted, if necessary and in volumes and velocities controlled to prevent resuspension of sediments in the storm water system.

(2) Lawn watering and other irrigation runoff are permitted but shall be minimized.

(3) Dechlorinated swimming pool discharges. These discharges shall be dechlorinated to a

concentration of 0.1 ppm or less, pH-adjusted, if necessary and in volumes and velocities controlled to prevent resuspension of sediments in the storm water system.

(4) Street and sidewalk wash water, water used to control dust, and routine external building wash down that does not use detergents are permitted if the amount of street wash and dust control water used is minimized. At active construction sites, street sweeping must be performed prior to washing the street.

(5) Non-storm water discharges covered by another NPDES permit; provided, that the discharger is in full compliance with all requirements of the permit, waiver, or order and other applicable laws and regulations; and provided, that written approval has been granted for any discharge to the storm drain system.

(d) Prohibition of Illicit Connections.

(1) The construction, use, maintenance, or continued existence of illicit connections to the storm drain system are prohibited and constitute a violation of this chapter.

(2) This prohibition expressly includes, without limitation, illicit connections made in the past, regardless of whether the connection was permissible under law or practices applicable or prevailing at the time of connection.

(3) A person is considered to be in violation of this section if the person connects a line conveying sewage to the MS4, or allows such a connection to continue.

(e) Implementation of structural BMPs shall be required if operational BMPS are not effective at reducing or eliminating an illicit discharge. Guidance for design of structural BMPs is provided in Volume IV of the 2005 Stormwater Management Manual for Western Washington, herein incorporated by reference. (Ord. 4200 § 19, 2009: Ord. 3711 § 4 (part), 1999)

15.52.100 Source control best management practices.

Any person causing or allowing discharge to a public drainage facility, natural drainage system, surface and storm water, or ground water shall control contamination in the discharge by implementing appropriate source control BMPs, as described in Volume IV of the 2005 Stormwater Management Manual for Western Washington. Failure to implement such practices shall constitute a violation of this chapter. Guidance on designing and implementing BMPs is provided in the standard plans. (Ord. 4200 § 20, 2009: Ord. 3711 § 4 (part), 1999)

15.52.110 Water quality standards.

The city of Kirkland hereby adopts by reference the water quality standards established under the

authority of Chapter 90.48 RCW and contained within Chapter 173-201A WAC as presently written or hereafter amended. (Ord. 3711 § 4 (part), 1999)

15.52.120 Operation and maintenance of storm water facilities.

(a) Standards for maintenance of storm water facilities existing on public or private property within the city of Kirkland are contained in Appendix A of the 2009 King County Surface Water Design Manual and the City of Kirkland Addendum to the 2009 King County Surface Water Design Manual. For facilities which do not have maintenance standards, the property owner shall develop a maintenance standard. Any maintenance agreement submitted and approved by the city through the permit process shall supersede maintenance requirements contained in the 2009 King County Surface Water Design Manual and the City of Kirkland Addendum to the 2009 King County Surface Water Design Manual.

(b) No person shall cause or permit any drainage facility on any public or private property to be obstructed, filled, graded, or used for disposal of debris. Any such activity constitutes a violation of this chapter.

(c) Any modification of an existing drainage facility must be approved and permitted by the city. Failure to obtain permits and approvals or to violate conditions thereof for any such alteration constitutes a violation of this chapter.

(d) The city will maintain all elements of the storm drainage system beginning at the first catch-basin within the public right-of-way, and in easements or tracts dedicated to and accepted by the city. All other facilities, including, but not limited to, nonresidential storm water facilities and roof downspout drains and driveway drains serving single-family residences, shall be maintained by the property owner.

(e) Maintenance of Nonresidential Storm Water Facilities by Owners.

(1) Any person or persons holding title to a nonresidential property for which storm water facilities have been required by the city of Kirkland shall be responsible for the continual operation, maintenance, and repair of said storm water facilities in accordance with the criteria set forth in Appendix A of the 2009 King County Surface Water Design Manual and the City of Kirkland Addendum to the 2009 King County Surface Water Design Manual. For facilities which do not have maintenance standards, the property owner shall develop a maintenance standard.

(2) For nonresidential storm water facilities, failure to meet the maintenance requirements specified in Appendix A of the 2009 King County Surface Water Design Manual and the City of Kirkland Addendum to the 2009 King County Surface Water Design Manual constitutes a violation of this chapter, and shall be enforced against the owner(s) of the subject property served by the storm water facility.

(f) City Acceptance of Existing Residential Storm Water Facilities. The city may accept for maintenance those storm water facilities serving residential developments existing prior to the effective date of the ordinance codified in this chapter that meet the following conditions:

(1) The storm water facilities serve more than one individual house or property;

(2) An inspection by the director has determined that the storm water facilities are functioning as designed;

(3) The storm water facilities have had at least two years of satisfactory operation and maintenance, unless otherwise waived by the director;

(4) An inspection by the director has determined that the storm water facilities are accessible for maintenance using existing city equipment;

(5) The person or persons holding title to the properties served by the storm water facilities must submit a petition containing the signatures of the title holders of more than fifty percent of the lots served by the storm water facilities requesting that the city maintain the storm water facilities;

(6) All easements entitling the city to properly access, operate and maintain the subject storm water facilities have been conveyed to the city and have been recorded with the King County office of records and elections;

(7) The person or persons holding title to the properties served by the storm water facilities shows proof of the correction of any defects in the drainage facilities, including provision of maintenance access, as required by the director.

(g) Disposal of waste from maintenance activities shall be conducted in accordance with the Minimum Functional Standards for Solid Waste Handling, Chapter 173-304 WAC; guidelines published by the Washington State Department of Ecology for disposal of waste materials from storm water maintenance activities; and, where appropriate, the Dangerous Waste Regulations, Chapter 173-303 WAC. (Ord. 4214 § 2, 2009: Ord. 3711 § 4 (part), 1999)

Article IV. Inspection and Enforcement

15.52.130 Inspection and sampling.

(a) Inspections for compliance with the provisions of this chapter shall be allowed as follows:

(1) Construction and Development Inspection. The director or designee shall have access to any site for which a permit as listed in Section 15.52.050 has been issued, during regular business hours, for the

purpose of review of erosion control practices and storm water facilities, and to insure compliance with the terms of such permit. Applicants for any such permit shall agree in writing, as a condition of issuance thereof, that such access shall be permitted for such purposes. Inspection procedures shall be as outlined in Section 15.52.130(b).

(2) Inspection for Cause. Whenever there is cause to believe that a violation of this chapter has been or is being committed the director or designee is authorized to inspect the property during regular business hours, and at any other time reasonable in the circumstances. Inspection procedures shall be as outlined in Section 15.52.130(b).

(3) Inspection for Maintenance and Source Control Best Management Practices. The director or designee may inspect storm water facilities in order to ensure continued functioning of the facilities for the purposes for which they were constructed, and to ensure that maintenance is being performed in accordance with the standards of this chapter and any maintenance schedule adopted during the plan review process for the property. The director also may enter the site for the purposes of observing source control best management practices. The property owner or other person in control of the site shall allow any authorized representative of the director or designee access during regular business hours, or at any other time reasonable in the circumstances, for the purpose of inspection, sampling, and records examination.

(b) Inspection Procedure. Prior to making any inspections, the director or designee shall present identification credentials, state the reason for the inspection and request entry of the owner or other person having charge or control of the property, if available, or as provided below.

(1) If the property or any building or structure on the property is unoccupied, the director or his designee shall first make a reasonable effort to locate the owner or other person(s) having charge or control of the property or portions of the property and request entry.

(2) If, after reasonable effort, the director or his designee is unable to locate the owner or other person(s) having charge or control of the property, and has reason to believe the condition of the site or of the storm water drainage system creates an imminent hazard to persons or property, the inspector may enter.

(c) Water sampling and analysis for determination of compliance with this chapter shall be allowed as follows:

(1) Sample Collection. When the director has reason to believe that a violation exists or is occurring on a property, the director shall have the authority to set up on the site such devices as are necessary to conduct sampling, inspection, compliance monitoring, or flow measuring operations.

(2) Sample Analysis. Analysis of samples collected during investigation of potential violations shall be analyzed by a laboratory certified by the State Department of Ecology as competent to perform the required analysis using standard practices and procedures.

(3) Cost of Sample Collection and Analysis. If it is determined that a violation of this chapter exists on the site, the owner of the property shall pay the city's actual costs for collecting samples and for laboratory analysis of those samples. If it is found that a violation does not exist, the city will pay such charges. (Ord. 3711 § 4 (part), 1999)

15.52.140 Enforcement, violations and penalties.

Enforcement of violations of this chapter shall be conducted pursuant to Chapter 1.12. (Ord. 4280 § 5, 2011)

15.52.150 Conflicts.

If any provisions of any other chapter of the Kirkland Municipal Code, including the Zoning Code (Title 23 of the Kirkland Municipal Code), conflict with this chapter, that which provides more environmental protection shall apply unless specifically provided otherwise in this chapter. (Ord. 3711 § 4 (part), 1999)

15.52.160 Severability.

If any provision of this chapter or its application to any person or property is held invalid, the remainder of the chapter or the application of the provision to other persons or property if allowed shall not be affected. (Ord. 3711 § 4 (part), 1999)

Chapter 15.56
SURFACE WATER UTILITY MONTHLY SERVICE RATES AND STORM WATER CAPITAL FACILITIES CHARGES

Sections:

15.56.010 Service rates established.
15.56.020 Monthly surface water utility service rates.
15.56.030 Service to condominium.
15.56.040 Qualified senior citizen rate.
15.56.050 Storm water capital facilities charges.
15.56.060 Qualified rainwater harvesting discount.

15.56.010 Service rates established.

The monthly service rates to be paid to the city by the owners of developed land within the city of Kirkland are established as set forth in this chapter. The rate for storm water services shall be charged whether the premises are occupied or vacant; provided the site contains impervious surface. An undeveloped parcel not containing impervious surface area will not be charged for storm water services. (Ord. 4200 § 22, 2009: Ord. 3597 § 1 (part), 1997)

15.56.020 Monthly surface water utility service rates.

Effective 2006:*

The monthly surface water utility rates are based on the impervious surface area.

(1) Single-Family Residential Parcels. The average impervious area for a single-family residence is two thousand six hundred square feet. This is based on the measurement of over three hundred parcels. This value is referred to as an equivalent service unit (ESU). The single-family service charge shall be equivalent to one ESU and shall be a flat rate of fourteen dollars and fifteen cents.

(2) All Other Customers, Including Commercial and Multifamily Residential. The service charge for all classes other than single-family residences will be based on the number of ESUs. The actual measured impervious area of each individual site will be divided by two thousand six hundred square feet to determine the number of ESUs of the individual site. The computed rate shall not be less than that for one ESU. The surface water utility service rate for these customers shall be fourteen dollars and fifteen cents per each ESU.

(3) Late Fees. All fees and charges arising under this chapter which are past due or delinquent shall be charged a late fee of eight percent per annum.

*Code reviser's note: Ord. 4014 § 2 provides as follows: "Effective date for new rates: The monthly rates established in this ordinance shall go into effect and become the rates to be charged as of January 1, 2006."

Effective 2011:*

The monthly surface water utility rates are based on the impervious surface area.

(1) Single-Family Residential Parcels. The average impervious area for a single-family residence is two thousand six hundred square feet. This is based on the measurement of over three hundred parcels. This value is referred to as an equivalent service unit (ESU). The single-family service charge shall be equivalent to one ESU and shall be a flat rate of fourteen dollars and eighty-six cents.

(2) All Other Customers, Including Commercial and Multifamily Residential. The service charge for all classes other than single-family residences will be based on the number of ESUs. The actual measured impervious area of each individual site will be divided by two thousand six hundred square feet to determine the number of ESUs of the individual site. The computed rate shall not be less than that for one ESU. The surface water utility service rate for these customers shall be fourteen dollars and eighty-six cents per each ESU.

(3) Late Fees. All fees and charges arising under this chapter which are past due or delinquent shall be charged a late fee of eight percent per annum.

*Code reviser's note: Ord. 4264 § 2 provides as follows: "Effective date for new rates: The monthly rates established in this ordinance shall go into effect and become the rates to be charged as of January 1, 2011."

Effective 2012:*

The monthly surface water utility rates are based on the impervious surface area.

(1) Single-Family Residential Parcels. The average impervious area for a single-family residence is two thousand six hundred square feet. This is based on the measurement of over three hundred parcels. This value is referred to as an equivalent service unit (ESU). The single-family service charge shall be equivalent to one ESU and shall be a flat rate of fifteen dollars and sixty cents.

(2) All Other Customers, Including Commercial and Multifamily Residential. The service charge for all classes other than single-family residences will be based on the number of ESUs. The actual measured impervious area of each individual site will be divided by two thousand six hundred square feet to determine the number of ESUs of the individual site. The computed rate shall not be less than that for one ESU. The surface water utility service rate for these customers shall be fifteen dollars and sixty cents per each ESU.

(3) Late Fees. All fees and charges arising under this chapter which are past due or delinquent shall be charged a late fee of eight percent per annum.

*Code reviser's note: Ord. 4265 § 2 provides as follows: "Effective date for new rates: The monthly rates established in this ordinance shall go into effect and become the rates to be charged as of January 1, 2012."

(Ord. 4265 § 1, 2010; Ord. 4264 § 1, 2010; Ord. 4014 § 1, 2005: Ord. 3964 § 1, 2004: Ord. 3911 § 1, 2003: Ord. 3806 § 1, 2001: Ord. 3765 § 1, 2000: Ord. 3714 § 1, 1999: Ord. 3597 § 1 (part), 1997)

15.56.030 Service to condominium.

For the purposes of this chapter, storm water utility rate shall be computed by measuring the impervious area of the entire condominium site and dividing by two thousand six hundred square feet per ESU. The "total" service fee shall be the number of ESUs multiplied by the rate/ESU as set forth in Section 15.56.020(B). The rate for each "condominium unit" shall then be determined by dividing the entire service fee by the number of units. (Ord. 3597 § 1 (part), 1997)

15.56.040 Qualified senior citizen rate.

(a) The rates to be charged to a qualified low-income senior citizen single-family residential customer shall be:

(1) Storm Water Service Fee. Fifty percent of the basic charge per ESU as set forth in Section 15.56.020(A).

(b) For the purposes of this section, "qualified low-income senior citizen" means a person that has been determined by the King County assessor to be qualified for a low-income senior citizen property tax exemption authorized under RCW 84.36.381 as currently written or hereafter amended. (Ord. 3714 § 2, 1999: Ord. 3597 § 1 (part), 1997)

15.56.050 Storm water capital facilities charges.

The purpose of this section is to establish storm water capital facilities charges for all development activity as defined in the Kirkland Zoning Code that will include creation of new impervious surface.

(1) The storm water capital facilities charge base fee (SWCFC base fee) will be equal to four hundred eighty-one dollars. The SWCFC base fee shall be adjusted periodically, but not less often than every odd-numbered year. The adjustment shall use the method following:

(a) The adjusted SWCFC base fee shall be calculated by the following formula:

(In-Plant Service/Total Customer Base) + (Future Cost Basis/Future Customer Base) = Storm Water Capital Facilities Base Fee

(b) The in-plant service is the cost at the time of the adjustment of all city storm water facilities installed since formation of the surface water utility less any storm water facilities funded by local improvement districts, grants or installation by private entities (developers).

(c) The future cost basis is the cost of proposed capital improvement projects that can be attributed to future growth and expansion of the system.

(d) The future customer base is the number of equivalent service units (ESU), as defined in Section 15.56.020, of impervious surface that it is estimated will be added to the city based on lot coverage under current land use zoning and an analysis of currently existing impervious surfaces within the city.

(e) The total customer base is the existing number of ESU within the city plus the future customer base.

(f) Upon determining the adjusted SWCFC base fee, the director of public works shall file with the director of finance and administration three copies noting the adjusted fee along with the values the fee is based on. The director of finance and administration shall file the schedules and values with the city clerk to be available for use by the general public and the affected city officials and departments.

(2) Criteria for Determination of Storm Water Capital Facilities Charge. The storm water capital facilities charge (SWCFC) must be paid prior to issuance of the building permit and shall be determined by application of the criteria set forth below:

(a) For one new detached dwelling unit on a single lot, the SWCFC shall equal the SWCFC base fee as defined in subsection (1) of this section.

(b) For all other developments, the SWCFC charge shall equal the SWCFC base fee as defined in subsection (1) of this section times the number of ESU of new impervious surface to be created as part of the development, except as noted in subsection (2)(c) of this section.

(c) The following portions of a development are exempt from payment of a SWCFC charge:

(i) Pedestrian facilities and street improvements that will be dedicated to or constructed for the public use.

(ii) Private access roads serving residential subdivisions.

(iii) Alteration or expansion of a single detached dwelling unit on a single lot.

(iv) Existing impervious surfaces that are being removed and replaced. (Ord. 4036 § 2, 2006)

15.56.060 Qualified rainwater harvesting discount.

The city of Kirkland shall provide a ten percent reduction in the monthly service rate for parcels containing new or remodeled commercial buildings that utilize a permissive rainwater harvesting system. The system must be designed to collect and use at least ninety-five percent of the average annual runoff volume from the impervious surface. A system that involves indoor uses of rainwater must also be permitted by Seattle-King County department of health to qualify for the rate reduction. Qualifying for the monthly service rate reduction does not relieve the property owner from the obligation to comply with applicable storm water and drainage code requirements for the buildings and site. (Ord. 4200 § 23, 2009)

ORDINANCE NO. 2719 Repealed by 3946

AN ORDINANCE OF THE CITY OF KIRKLAND, WASHINGTON DECLARING CROSS CONNECTIONS WHICH ENDANGER WATER QUALITY, UNLAWFUL AND REQUIRING THE INSTALLATION OF BACKFLOW PREVENTION DEVICES, REQUIRING PRIVATE WATER SUPPLY SYSTEMS TO CONFORM WITH THE APPLICABLE ORDINANCES OF THE CITY OF KIRKLAND, ADOPTING STATE STANDARDS FOR WATER SUPPLIES AND CROSS CONNECTION CONTROL REGULATION, DECLARING EXISTING UNLAWFUL CROSS CONNECTIONS TO BE PUBLIC NUISANCES AND PRESCRIBING A PROCEDURE FOR ABATEMENT OF SAID NUISANCES.

Whereas, the City Council of the City of Kirkland has determined that certain cross connections in the public water supply, pose a potential hazard to water quality within the City; and

Whereas, the installation of backflow prevention devices to counteract back pressure or to prevent back siphonage into the public water system are necessary for the public health, welfare and safety, now, therefore,

BE IT ORDAINED by the City Council of the City of Kirkland as follows:

Section 1. Chapter 21.20 of the Kirkland Municipal Code is hereby amended by adding to said chapter, the following sections:

Section 21.20.200--Definitions:

1. Backflow: A flow, other than the intended direction of flow, of any foreign liquids, gases, or substances into the distribution system of a public water supply.

2. Backflow Prevention Device: A device approved by the State of Washington, Department of Social and Health Services or such other state department as shall have jurisdiction over the subject matter, and by the American Water Works Association, used to counteract back pressure or prevent back siphonage into the distribution system of a public water supply.

3. Cross Connection: Any physical arrangement whereby a public water supply is connected, directly or indirectly, with any other water supply system, sewer, drain, conduit, pool, storage reservoir, plumbing fixture, or other device which contains or may contain contaminated water, sewage, or other wastes or liquids of unknown or unsafe quality, which may be capable of imparting contamination to a public water supply as a result of backflow.

Section 21.20.210 Cross Connections Declared Unlawful: The installation or maintenance of a cross connection, which in the opinion of the Director of Public Works, or Building Official or any staff member that he or she shall designate who is qualified in protection of municipal water quality, will endanger the water quality of the potable water supply of the City of Kirkland, is hereby declared to be unlawful.

Section 21.20.220 Backflow Prevention Devices to be Installed: Backflow prevention devices, when required to be installed in the opinion of the Director of Public Works, or Building Official or his designated representative shall be installed and maintained by the service customer on any service connection to the City of Kirkland water supply system where said backflow prevention devices are necessary for the protection of the City of Kirkland water supply.

Section 21.20.230 Regulation of Private Water Supplies: Use or operation of a private water supply system, contrary to the provisions of the ordinances of the City of Kirkland, or the laws of the State of Washington or the rules and regulations of the State Board of Health regarding public water supplies where said private system is served by the City public water supply, are hereby declared to unlawful.

Section 21.20.240 Adoption of State Regulations: Rules and regulations of the State Board of Health regarding public water supplies, entitled "Cross Connection Control Regulation in Washington State" WAC 248-54-250 through WAC 248-54-500, and the American Water Works Association, Pacific Northwest Section's Second Edition of "Accepted Procedure and Practice in Cross-Connection Manual" as they presently exist and as they may, from time to time, be amended in the future, are hereby adopted by this reference as if set forth in full.

Section 21.20.250 Abatement of Unlawful Cross Connections and Installation of Backflow Prevention Devices--Procedures: Cross connections declared in this chapter to be unlawful whether presently existing or hereinafter installed and/or services requiring backflow prevention devices and/or unlawful use of operation of a private water supply system served by the City public water supply system are hereby declared to be public nuisances,

and in addition to any other provisions of the Kirkland City code or the ordinances of the City of Kirkland where abatement of public nuisances, shall be subject to abatement in accordance with the following procedure:

1. In the event that the Director of Public Works, or Building Official or his designee determines that a nuisance as herein provided does exist, written notice shall be sent to the person in whose name the water service is established under the records of the City of Kirkland Water Department, or alternatively, a copy of such written notice shall be posted on the premises served.

2. The notice shall provide that the nuisance described herein shall be corrected within thirty days (30) of the date said notice is mailed or posted on the premises.

3. In the event said nuisance is not abated within the prescribed time, water service to said premises shall be discontinued.

4. In the event that the nuisance, in the opinion of the Director of Public Works, or Building Official or his designated representative, presents an immediate danger of contamination to the public water supply, service from the City water supply system to the premises may be terminated without prior notice, provided, however, notice will be posted on the premises in the manner heretofore provided at the time said service is terminated.

Section 21.20.260 Penalties: In addition to the remedies set forth herein, any person found guilty of violating any of the provisions of this chapter shall be subject to the penalties as set forth in Section 21.20.034 of the Kirkland City code.

Section 2. This ordinance shall be in force and effect five days from and after its passage by the Kirkland City Council in posting or publication as required by law.

Passed by the Kirkland City Council in regular meeting on the 20th day of December, 1982.

Signed in authentication thereof on the 20th day of December, 1982.

MAYOR

ATTEST:

Director of Administration & Finance
(ex officio City Clerk)

APPROVED AS TO FORM:

City Attorney

CERTIFICATION OF POSTING

I hereby certify under penalty of perjury that the foregoing ordinance was posted on the 22nd day of December, 1982 in accordance with the provisions of RCW 35A.12.160 and City of Kirkland Ordinance No. 2600.

Clerk

APPENDIX T

Interlocal Agreement with Northshore Utility District

INTERLOCAL AGREEMENT
118/116 EMERGENCY WATER INTERTIE

THIS AGREEMENT is made this 21st day of May, 2012, between the **NORTHSHORE UTILITY DISTRICT**, a municipal corporation in King County, Washington ("District") and the **CITY OF KIRKLAND**, a municipal corporation in King County, Washington ("City").

SECTION 1. RECITALS

1.1 District provides water service to the area northeast of Lake Washington, including the Totem Lake, Finn Hill, Juanita and Kingsgate area of City, in King County, Washington. City provides water service to the rest of City limits not served by District. A portion of the District's water service boundary is located adjacent to the City's water service boundary.

1.2 District and City desire to obtain supplemental water supply for emergency purposes through an intertie between their respective water systems, subject to certain terms and conditions.

1.3 District and City are authorized by Chapter 39.34 RCW, the Interlocal Cooperation Act, to enter into cooperative agreements.

In consideration of the terms and conditions contained herein, the parties now agree as follows:

SECTION 2. EMERGENCY INTERTIE

2.1 District and City agree to provide each other with an emergency standby source of water through an intertie connection between the District and City water systems, at the location described and depicted on Exhibit "1" attached hereto ("Intertie").

2.2 Intertie shall consist of an 8" ductile iron water main, a fire hydrant, and two normally-closed valves, as depicted on Exhibit "1". Intertie shall be constructed by City at City's sole expense. City shall transfer ownership of said 8" water main located within District's water service boundaries, at no cost to District by bill of sale. Each party shall then own, operate, and maintain that portion of Intertie located within their respective water service boundaries.

2.3 Intertie shall be used only in the event of an emergency, or when otherwise required due to a planned, temporary disruption of service resulting from construction or maintenance.

2.4 An emergency shall be considered any event that requires District's or City's water supply to be augmented on a temporary, emergency basis.

2.5 In case of water supply required for emergency use, District or City shall provide water immediately upon oral notification of such emergency. Follow-up written notice of such emergency request shall be made by District or City to the other party.

2.6 In case of water supply required for a planned, temporary disruption of service, District or City shall notify the other party in writing at least forty-eight (48) hours in advance of the time either party desires to receive water through Intertie. The request shall include the startup time and estimated duration of service.

2.7 When activating emergency Intertie service, each party shall operate their respective system components only, and shall provide adequate flushing of the system prior to activating Intertie.

2.8 District and City shall make reasonable efforts to provide an uninterrupted supply of water. Neither party shall be liable for any shortage or interruption in the delivery of water. In addition, neither party shall be liable for any failure, interruption or shortage of water, or any loss or damage resulting therefrom occasioned by any cause beyond the control of either party. District and City do not guarantee the availability of water through Intertie at all times because of each party's respective needs and water demand. Further, during critical water shortage periods as determined by either party, District or City may deny use of the intertie until sufficient water supply exists to make such available for use by either party.

SECTION 3. BILLING FOR THE COST OF WATER USED

3.1 A written estimate of the quantity of water used shall be reported by the receiving party to the supplying party, within three (3) days after the termination of Intertie use. The estimate of water used shall include a detailed explanation as to how the estimate was derived. If the emergency water use continues for more than 30 days, the written estimate of water use shall be provided on the 1st of each month.

3.2 In the event that District or City receives water through Intertie, both parties agree to pay the other party for such water delivered at the wholesale rate plus ten percent (10%). Wholesale rate per CCF shall be determined based on the preceding complete calendar year, by dividing the total annual volume of water (in CCF) delivered to City's or District's retail end users within their respective service boundaries, into the total annual costs of potable water purchased from the wholesale supplier(s) during the same calendar year. The party delivering such water shall bill the party receiving such water monthly for the amount of water delivered. The party receiving such water shall pay the other party within forty-five (45) days of the date of such billing. Any billings not paid by the party within such 45-day period shall accrue interest at the rate of twelve percent (12%) per annum until paid.

SECTION 4. GENERAL PROVISIONS

4.1 Neither party shall by virtue of this Agreement acquire any proprietary or governmental interest in the water system of the other party. Each party shall be solely responsible for the operation and maintenance of its own system of water distribution.

4.2 District and City agree to hold harmless and indemnify the other party and its officers, employees and agents from any and all claims, damages, costs or other liabilities caused by parties' sole negligence or the parties' concurrent negligence, but only to the extent of the parties' concurrent negligence and arising by reason of participation in connection with or relating to the performance of this Agreement.

4.3 This Agreement shall be binding upon and inure to the benefit of the parties hereto and their respective successors and assigns.

4.4 Any notice to be given or any documents to be delivered by any party to any other shall be delivered in person or by certified mail and addressed to the District or City at the following addresses:

District:

General Manager
Northshore Utility District
6830 NE 185th Street
Kenmore, WA 98028

With a Copy To:

Kinnon Williams
Williams & Williams, PSC
18806 Bothell Way NE
Bothell, WA 98011

City:

Mayor
City of Kirkland
123 Fifth Avenue
Kirkland, WA 98033

With a Copy To:

City Attorney
City of Kirkland
123 Fifth Avenue
Kirkland, WA 98033

4.5 This Agreement constitutes the entire agreement between the parties with respect to the subject matter hereof and may be modified only by an agreement in writing signed by both parties.

4.6 This Agreement shall be administered jointly by the City Public Works Director and the District General Manager.

4.7 This Agreement shall take effect upon ratification of this Agreement by the Board of Commissioners of District and the City Council of City. This Agreement shall remain in effect until terminated by either party by thirty (30) days' prior written notice to the other party.

4.8 A copy of this Interlocal Agreement shall be filed with the City Clerk, the King County Recorder's Office, Seattle Public Utilities, and the State Department of Health.

CITY:

CITY OF KIRKLAND

By Marilynne Beard

Name: Marilynne Beard

Title: Assistant City Manager

DISTRICT:

NORTHSHORE UTILITY DISTRICT

By

Fanny Yee, its General Manager

Approved as to Form:

OFFICE OF THE CITY ATTORNEY

By Oskar Rey

Name: Oskar Rey

Title: Asst. City Attorney

Approved as to Form:

DISTRICT GENERAL COUNSEL

By

Kinnon Williams

EXHIBIT "1"

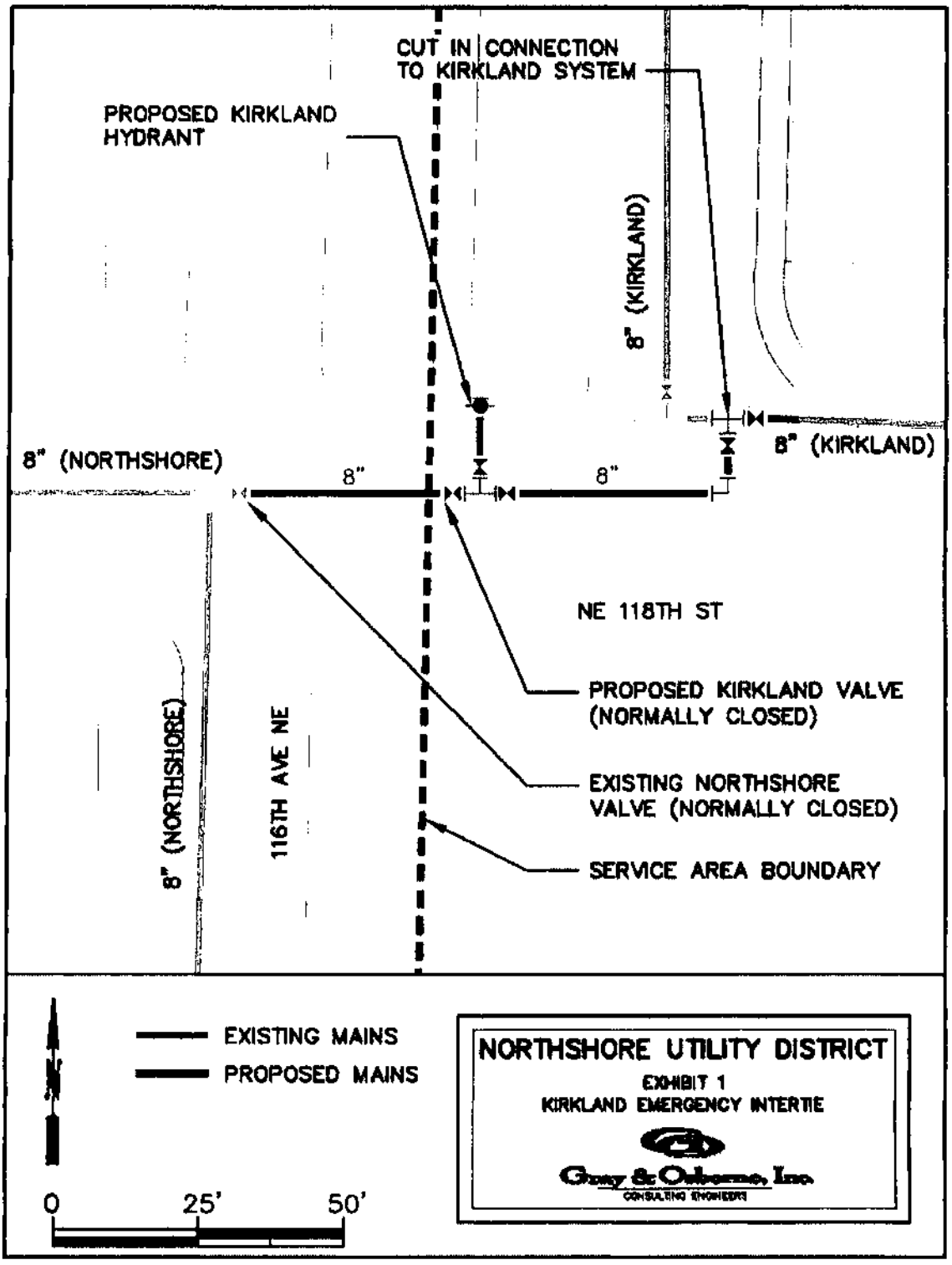
CUT IN CONNECTION
TO KIRKLAND SYSTEM
PROPOSED KIRKLAND
HYDRANT
8" (KIRKLAND)
8" (KIRKLAND)
8" (NORTHSHORE)
8"
8"
NE 118TH ST
PROPOSED KIRKLAND VALVE
(NORMALLY CLOSED)
EXISTING NORTHSHORE
VALVE (NORMALLY CLOSED)
SERVICE AREA BOUNDARY
8" (NORTHSHORE)
116TH AVE NE
EXISTING MAINS
PROPOSED MAINS
0
25'
50'
NORTHSHORE UTILITY DISTRICT
EXHIBIT 1
KIRKLAND EMERGENCY INTERTIE
Gray & Osborne, Inc.
CONSULTING ENGINEERS

ORIGINAL

20050209000944
NORTHSHORE UTI AG 31.00
PAGE001 OF 008
02/09/2005 12:38
KING COUNTY, WA

Return Address:
Northshore Utility District
P O BOX 82489 – Attn Carol Cameron
Kenmore, WA 98028

K 4139 - NUD 1995-11-1

Please print or type information **WASHINGTON STATE RECORDER'S Cover Sheet** (RCW 65.04)

Document Title (or transactions contained therein) (all areas applicable to your document)

INTERLOCAL AGREEMENT WITH CITY OF KIRKLAND
EMERGENCY INTERTIE FOR SUPPLEMENTAL WATER SUPPLY - C544

Reference Number(s) of Documents assigned or released:
Additional reference #'s on page of document:

Grantor(s) (Last name first, then first name and initials)
1. **CITY OF KIRKLAND**
2.
3.
4.
Additional names on page _____ of document.

Grantees (Last name first, then first name and initials)
1 **NORTHSHORE UTILITY DISTRICT**
2
3
4

Additional names on page _____ of document.

Legal description **(abbreviated: i.e. lot, block, plat or section, township, range)**
NONE

Tax Parcel Number :NONE

The Auditor/Recorder will rely on the information provided on the form. The staff will not read the document to verify the accuracy or completeness of the indexing information provided herein.

200502 9000940

C 544

INTERLOCAL AGREEMENT

THIS AGREEMENT is made this 7 day of DECEMBER, 1998, between the **NORTHSHORE UTILITY DISTRICT**, a municipal corporation in King County, Washington ("District") and the **CITY OF KIRKLAND**, a municipal corporation in King County, Washington ("City").

SECTION 1. RECITALS

1.1 District provides water service to the Northshore geographic area, including the Totem Lake area in King County, Washington. City provides water service to the City of Kirkland, King County, Washington. A portion of the District's water service boundary is located adjacent to the City's water service boundary.

1.2 District and City desire to obtain supplemental water supply for emergency purposes by an intertie between their respective water systems, subject to certain terms and conditions.

1.3 District and City are authorized by Chapter 39.34 RCW, the Interlocal Cooperation Act, to enter into cooperative agreements.

In consideration of the terms and conditions contained herein, the parties now agree as follows:

SECTION 2. EMERGENCY INTERTIE

2.1 District and City agree to provide each other with an emergency standby source of water through an intertie connection between the District and City water systems, at the location described and depicted on **Exhibit A** attached hereto. This connection shall be an emergency standby connection, and water shall only be drawn through this point when an emergency occurs. An emergency shall be considered any event that requires District's or City's water supply to be augmented on an temporary emergency basis.

2.2 District or City shall notify the other party in writing at least Twelve (12) ~~days~~/hours in advance of the date either party desires to receive water through the intertie. In case of emergency need, District or City shall provide water immediately upon oral notification of such emergency. Follow-up written notice of such emergency request and water usage shall be made by District or City to the other party, including an estimated quantity of water used, within three (3) days after the termination of such emergency water usage.

2.3 The intertie valve shall be owned and installed by the District. Both District and City personnel are authorized to operate the intertie valve.

2.4 District and City shall use reasonable efforts to provide an uninterrupted supply of water. Neither party shall be liable for any shortage or interruption in the delivery of water. In addition, neither party shall be liable for any failure, interruption or shortage of water, or any loss or damage resulting therefrom occasioned by any cause beyond the control of either party. District and City do not guarantee the availability of water through the intertie at all times because of each party's respective needs and water demand. Further, during critical water shortage periods as determined by either party, District or City may close the intertie until sufficient water supply exists to make such available for use by either party.

2.5 In the event that District or City receive water through the intertie, both parties agree to replenish or replace the same volume of water received and delivered from the intertie to the other party within 72 hours of the time of receipt. In the event such water delivered is not replaced by the receiving party within such period, the party receiving such water shall pay the other party for such water delivered at the wholesale rate plus ten percent (10%) by the party delivering such water. The party delivering such water shall bill the party receiving such water monthly for the amount of water delivered. The party receiving such water shall pay the other party within forty-five (45) days of the date of such billing. Any billings not paid by the party within such 45-day period shall accrue interest at the rate of twelve percent (12%) per annum until paid.

SECTION 3. GENERAL PROVISIONS

3.1 Neither party shall by virtue of this Agreement acquire any proprietary or governmental interest in the water system of the other party. Each party shall be solely responsible for the operation and maintenance of its own system of water distribution.

3.2 District and City agree to hold harmless and indemnify the other party and its officers, employees and agents from any and all claims, damages, costs or other liabilities caused by the parties' sole negligence or the parties' concurrent negligence, but only to the extent of the parties' concurrent negligence and arising by reason of participation in connection with or relating to the performance of this Agreement.

3.3 This Agreement shall be binding upon and inure to the benefit of the parties hereto and their respective successors and assigns.

3.4 Any notice to be given or any documents to be delivered by any party to any other

shall be delivered in person or by certified mail and addressed to the District or City at the following addresses:

District:	District Manager Ron Gehrke 6830 NE 185th St. Kenmore, WA 98028-2701
With a copy to:	John W. Milne Inslee, Best, Doezie & Ryder, P.S. 777 - 108th Avenue N.E., Suite 1900 P. O. Box C-90016 Bellevue, WA 98009-9016
City:	Mayor City of Kirkland _____ _____
With a copy to:	City Attorney City of Kirkland _____ _____

3.5 This Agreement constitutes the entire agreement between the parties with respect to the subject matter hereof and may be modified only by an agreement in writing signed by both parties.

3.6 This Agreement shall be administered jointly by the City Public Works Director and the District Manager.

3.7 This Agreement shall take effect upon ratification of this Agreement by the Board of Commissioners of District and the City Council of City. This Agreement shall remain in effect until terminated by either party by thirty (30) days' prior written notice to the other party.

3.8 A copy of this Interlocal Agreement shall be filed with the City Clerk, the County Auditor, and the Washington Secretary of State.

CITY:

CITY OF KIRKLAND

By _____
Name: _____
Title: _____

DISTRICT:

NORTHSHORE UTILITY DISTRICT

By _____
Name: Trudy C. Rolla
Title: President & Commissioner

Approved as to Form:

OFFICE OF THE CITY ATTORNEY

By _____
Name: Gail Gorud
Title: City Attorney

Approved as to Form:

DISTRICT LEGAL COUNSEL

By _____
Name: JOHN MILLAR
Title: Attorney

RESOLUTION R- 4139

Dave K

A RESOLUTION OF THE CITY COUNCIL OF THE KIRKLAND APPROVING AN INTERLOCAL AG BETWEEN THE CITY OF KIRKLAND AND THE NORTHSHORE UTILITY DISTRICT TO PROVIDE FOR AN EMERGENCY INTERTIE BETWEEN THEIR RESPECTIVE WATER SYSTEMS AND AUTHORIZING THE CITY MANAGER TO SIGN THE AGREEMENT ON BEHALF OF THE CITY OF KIRKLAND.

WHEREAS, the Northshore Utility District provides water service to the Northshore geographic area including the Totem Lake area and Kirkland provides water service to the City of Kirkland; and

WHEREAS, a portion of the District's water service boundary is located adjacent to the City's water service boundary; and

WHEREAS, the District and the City desire to obtain supplemental water supply for emergency purposes by an intertie between their respective water systems subject to certain terms and conditions; and

WHEREAS, the District and the City are authorized by Chapter 39.34 of the Revised Code of Washington, the Interlocal Cooperation Act, to enter into cooperative agreements;

NOW, THEREFORE, BE IT RESOLVED by the City Council of the City of Kirkland as follows:

Section 1. That certain Interlocal Agreement between the Northshore Utility District and the City of Kirkland to provide for an intertie between their respective water systems to permit water from one system to be utilized by the other system in times of emergency as set forth in Exhibit A attached to the original of this resolution and by reference incorporated herein is approved. The City Manager is authorized to sign said contract on behalf of the City of Kirkland.

Passed by majority vote of the Kirkland City Council in regular, open meeting this 23rd day of June, 1998

Signed in authentication thereof this 23 day of June, 1998

MAYOR

Attest:

City Clerk

Reso\interloc

cdw.com

NORTHSHORE UTILITY DISTRICT
KING COUNTY, WASHINGTON

Resolution No. 1998-11-1

A RESOLUTION OF THE BOARD OF COMMISSIONERS OF THE NORTHSHORE UTILITY DISTRICT OF KING COUNTY, WASHINGTON APPROVING AN INTERLOCAL AGREEMENT BETWEEN THE DISTRICT AND THE CITY OF KIRKLAND TO PROVIDE AN EMERGENCY INTERTIE BETWEEN THEIR RESPECTIVE WATER SYSTEMS.

WHEREAS, the Northshore Utility District ("District") provides water service to the Northshore geographic area including the Totem Lake area and Kirkland provides water service to the City of Kirkland; and

WHEREAS, a portion of the District's water service boundary is located adjacent to the City's water service boundaries; and

WHEREAS, the District and the City desire to obtain supplemental water supply for emergency purposes by an intertie between their respective water systems subject to certain terms and conditions;and

WHEREAS, the District and the City are authorized by Chapter 39.34 of the Revised Code of Washington, the Inter-Local Cooperation Act, to enter into cooperative agreements; now, therefore,

BE IT RESOLVED by the Board of Commissioners of the Northshore Utility District of King County, Washington, as follows:

1. The Inter-Local Agreement between the District and the City to provide for an emergency intertie between their respective water systems in the form attached hereto as Exhibit "A" and incorporated herein by this reference is hereby approved. The President of the District Board of Commissioners and the District General Manager are authorized to sign such Agreement on behalf of the District.

ADOPTED by the Board of Commissioners of the Northshore Utility District of King County, Washington, at the regular open public meeting thereof held the 2nd day of November, 1998.

TRUDY C. ROLLA

D.A. ELLIS

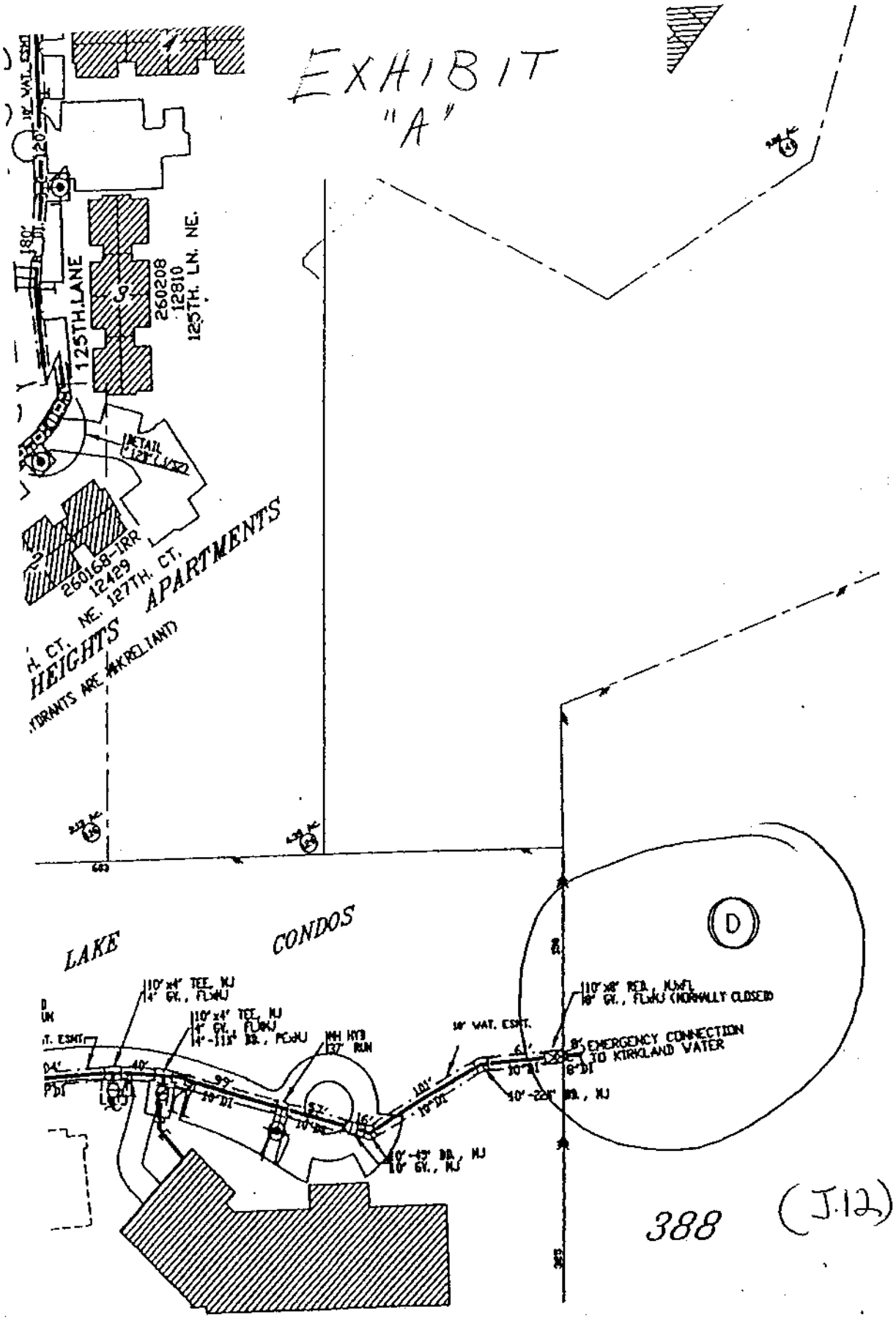
EXHIBIT
"A"
125TH. LANE
260208
12810
125TH. LN. NE.
260168-IRR
12429
127TH. CT.
HEIGHTS
APARTMENTS
LAKE
CONDOS
D
EMERGENCY CONNECTION
TO KIRKLAND WATER
388
(J.12)

APPENDIX U

Executive Summary of CWA's TSP

Executive Summary

Cascade Water Alliance is a public, non-profit corporation comprised of eight Member cities and special districts in King County, Washington. Cascade's primary role is to contract, plan and develop regional water supplies on behalf of its Members.

This Transmission and Supply Plan (TSP) fulfills Cascade's responsibility to submit a water system plan to the Washington State Department of Health. In addition, it supplements information on regional supply presented in each Member's individual water system plan.

Part I: Current Water Supplies, Facilities and Operations

Cascade contracts with Seattle Public Utilities (SPU) for delivery of water to seven of the eight Cascade Members[1]. The SPU supply contract provides for a "declining block" of supply that will be reduced in five-year increments beginning in 2024. Under the Block Contract, SPU is responsible for maintaining and operating source, treatment, transmission and storage facilities needed to deliver the contracted supply, as well as regulatory compliance for those facilities.

At this time Cascade's existing capital facilities for delivery of municipal water supplies consist solely of the Bellevue-Issaquah Pipeline (BIP). No capital improvements have been identified for the pipeline, nor does Cascade have other capital projects coming up in relation to its current supplies (for future supplies, see Part II, below).

Individual Members of Cascade own, operate and maintain their own water distribution systems. This includes, as applicable, water treatment for their independent water sources; maintenance of water quality within their reservoirs and distribution piping systems; and local monitoring of water quality conditions (some monitoring is shared with SPU or other water systems). Five of the eight Cascade Members have their own independent supplies.

Cascade's regional water service area coincides with the individual service areas of the Members, as shown in Figure ES.1. In addition, Cascade may deliver contracted supplies to other water purveyors in King and Pierce Counties for use in their water service areas, as described in this Plan.

[1] Covington Water District meets all of its own needs from its own wells and from the Regional Water Supply System involving Tacoma, the District and two other partners.

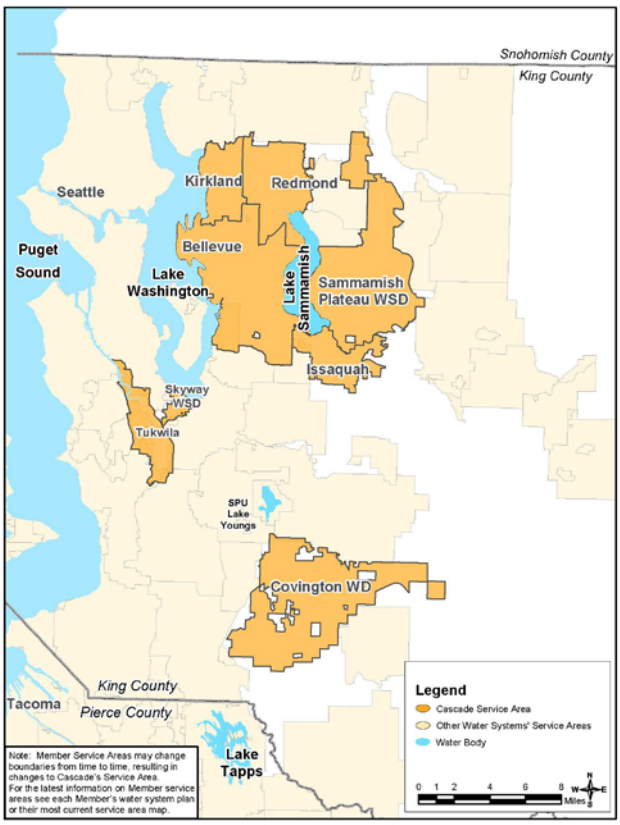

ES.1: Cascade Service Area

Cascade anticipates that the current mix of SPU and independent supplies will meet all Member needs through 2023. Beginning in 2024 when the SPU block begins to decline, additional supplies will be needed.

Cascade also administers regional water conservation services on behalf of its Members. The 2008-2014 Conservation Program has a goal of achieving water savings of 1 million gallons per day (mgd) in terms of annual average consumption and 1.45 mgd during the peak season. By the end of 2010 the annual average goal had already been attained. From 2014 through at least 2020 Cascade anticipates continued conservation activities, with water savings continuing to increase at a rate similar to that achieved since 2008. This assumption has been built into the water demand forecast used in the TSP.

Part II: Long-Term Water Supplies and Infrastructure

Forecast of Water Needs

In recent years the downturn in housing and economic activity has affected demands for water throughout the Puget Sound region, and this effect is expected to persist for the next several years. This is a change from past planning efforts when rapid growth was occurring. Coupled with the conservation program, this means that demand for water in Cascade's service area is forecast to remain close to 40 mgd through approximately 2020. After 2020 demands are forecast to rise to begin rising again. Cascade is responsible only for a portion of this demand; as Member independent supplies meet part of the water supply need.

Water Supply Portfolio

For this TSP Cascade evaluated a wide range of water supply options to meet long-term needs. These included additional or expanded contracted supplies from existing sources within the Central Puget Sound region; new surface water supplies, new ground water supplies, reclaimed water and enhanced water conservation. From an initial list of 27 possible sources, a preferred supply "portfolio" was selected. The preferred supply portfolio includes the following sources:

- Continued production from Member supplies serving their respective service areas.
- Continued use of water from Seattle Public Utilities (SPU) under the Block Contract.

- Beginning in 2024, delivery of Green River supply contracted from Tacoma Public Utilities (TPU).
- Beginning in 2024, delivery of additional Green River supply from Covington Water District's share in the Regional Water Supply System (RWSS)[2] over and above water used within the District's own service area.
- Beginning in 2030 (or as needed), water from Cascade's White River - Lake Tapps Reservoir Project (Lake Tapps Project).

This sequence of supplies is shown in Figures ES.2 and ES.3. Conditions shown in Figure ES.2 are for "maximum week" which typically occurs in July or August of each year. Conditions shown in Figure ES.3 represent average conditions over the entire year. A range of projected demands is shown in the charts, for comparison with available supplies. Under the preferred portfolio, available supplies are expected to exceed Cascade's water demand throughout the 50-year planning period.

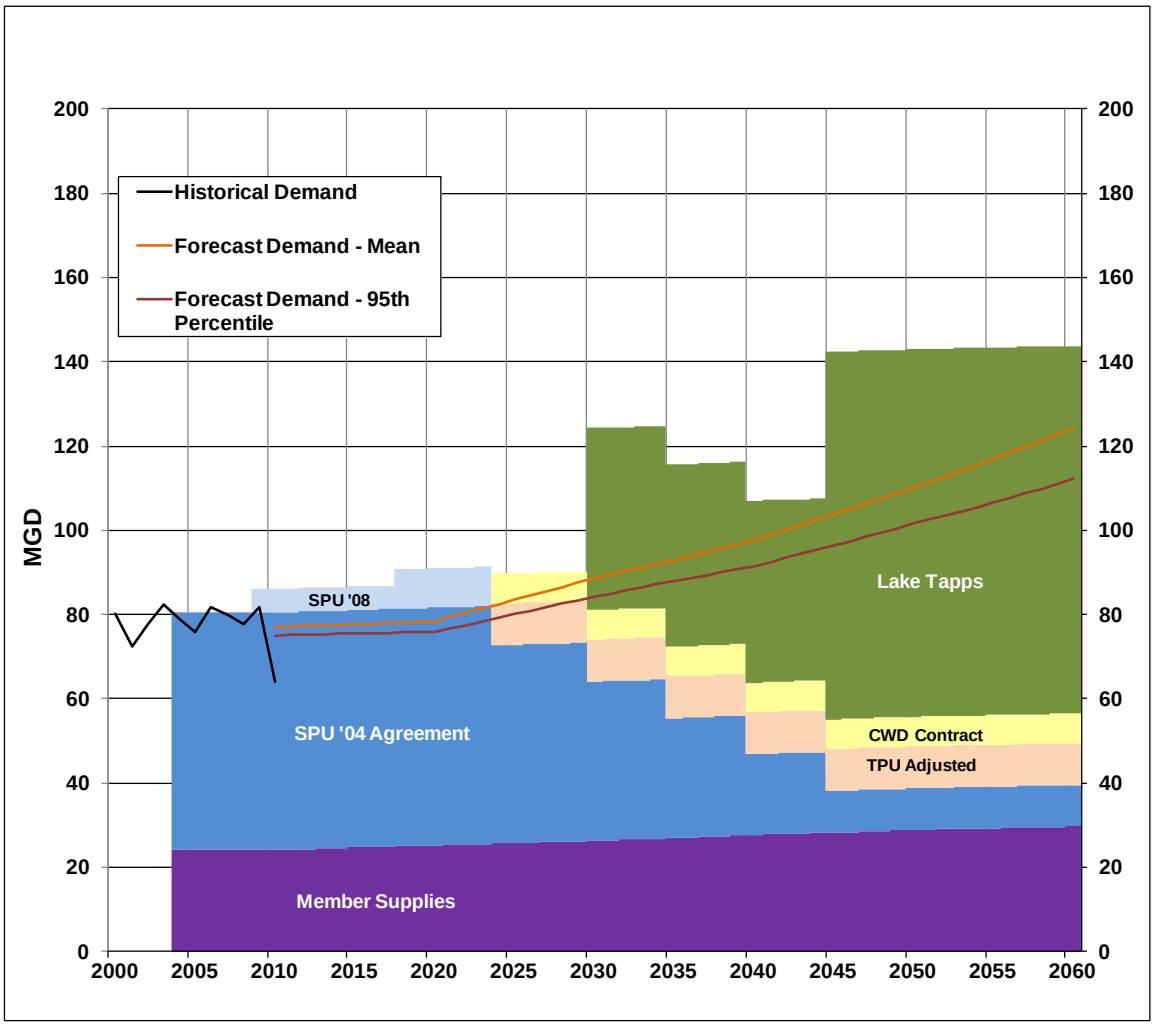

Figure ES.2: Cascade Supply Portfolio (Maximum Week)

[2] The RWSS was formerly known as the Tacoma Second Supply Project, or TSSP.

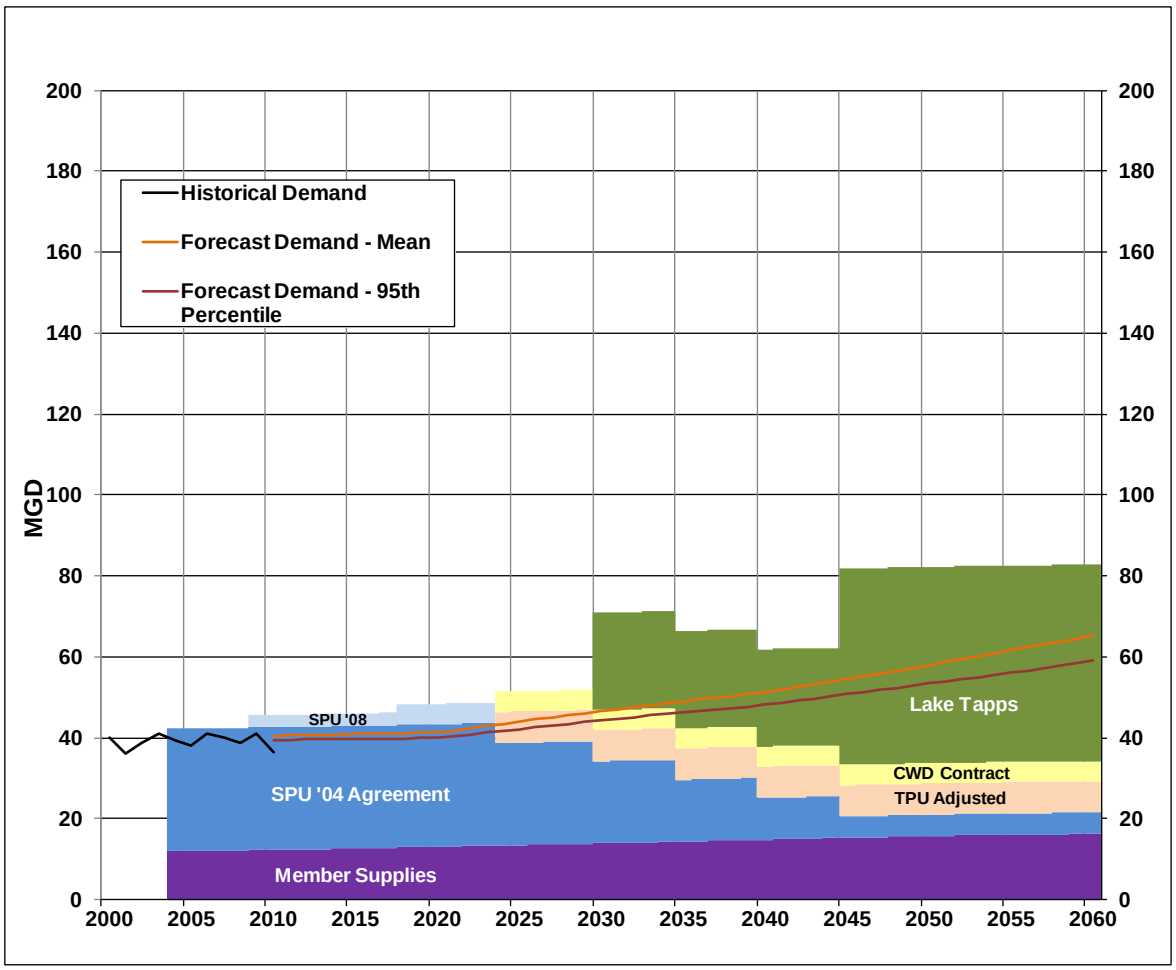

Figure ES.3: Cascade Supply Portfolio (Average Day)

Cascade's supply planning principles call for maintaining a high degree of flexibility to match available supplies with water needs as economically as possible. Investments in new water supplies will be made in stages based on actual growth in Cascade Member water demands over the coming decades. Therefore the exact quantities and timing of each new supply may change. In addition, Cascade anticipates renewed discussions with SPU and TPU from time to time regarding possible expansion of contracted supplies in the future. This could enable Cascade to delay construction of the Tacoma-Cascade Pipeline and/or the Lake Tapps Project. At a minimum Cascade will review and optimize the supply portfolio each time the TSP is updated at six-year intervals.

Lake Tapps Project

Lake Tapps is an off-channel reservoir in Pierce County that was created in 1911 to produce hydropower. In 2009 Cascade completed purchase of the lake and associated water rights and infrastructure from Puget Sound Energy with the intent of converting it to a municipal water supply project. In 2010 final water rights needed for this conversion were issued by the State of Washington. The water rights also provide for managing recreational water levels within the lake and for protection of flows in the White River.

Cascade plans to develop the necessary water treatment and delivery infrastructure in phases over time. The portfolio chart in Figure ES.2 reflects these assumptions. It shows Phase 1 of the Lake Tapps Project completed at year 2030 and Phase 2 at 2045. Phasing will respond to the timing of Cascade needs as well as any increases in other supplies over time. While Lake Tapps provides a critical resource for the long term, Cascade will seek opportunities to delay construction of both phases in order to spread the costs of infrastructure development over a longer period of time.

Infrastructure Needs and Costs

Cascade has developed a long-term Capital Improvement Plan (CIP) for development of the supply portfolio. Major projects include construction of the Tacoma-Cascade Pipeline by 2024 and construction of the Lake Tapps Project in two phases at 2030 and 2045. In addition, Cascade anticipates completion of a contract with Covington Water District to use a portion of the District's surplus supply from the RWSS. Improvements to the regional distribution system to serve Cascade Members located east of Lake Washington will also be needed eventually. These projects and their estimated costs are summarized in Table ES-1.

Table ES.1: Capital Costs of Supply Portfolio

Major Sources and Project Components	Capital Cost ($M) (2011 dollars)
Tacoma-Cascade Pipeline and Associated Costs (in service 2024)	89
Contracted Supply from Covington Water District (up front fee in 2012; in service 2024)	16
Lake Tapps Impoundment Improvements (2012-2023)	24
Lake Tapps Project, Phase 1 (in service 2030)	586
Lake Tapps Project, Phase 2 (in service 2045)	108
Regional Distribution in Cascade Service Area (in service 2040's)	119
Total 50-Year CIP ($M)	**942**

Anticipated sources of funding for infrastructure construction include revenue bonds and capital reserves, including income from Cascade's Regional Capital Facilities Charges (RCFCs) collected from Members over time. Cascade will also seek lower-cost sources of funding, such as grants and loans from State and federal sources. As discussed above, Cascade will continually seek opportunities to balance the costs of developing water supply infrastructure with ongoing growth in water needs; and will periodically review opportunities for the most economical mix of supply sources prior to building new infrastructure.

APPENDIX V

Seattle Water Quality Reports

Message from the Mayor

We may take it for granted, but Seattle's drinking water is one of the many things that makes our region special and adds to our quality of life. We're fortunate to enjoy safe and excellent tasting water from our snow-covered mountains and the pristine Cedar and Tolt River watersheds. We're also protecting water quality by covering our reservoirs, which creates acres of new open space in our neighborhoods.

The Environmental Protection Agency requires an annual water quality report from all community water systems nationwide. Here in Seattle, we're pleased to share the results. So let's celebrate our high-quality water—and drink up, Seattle.

Greg Nickels
Mayor of Seattle

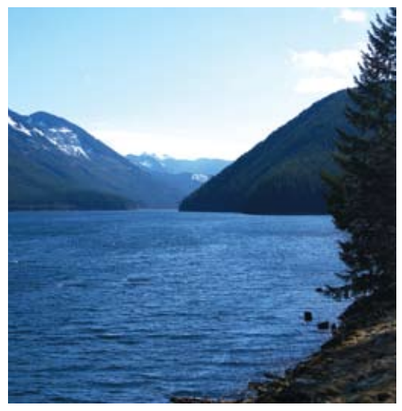

Your opinion counts!

Let us know how we're doing. Go to: www.seattlewater.org to take a quick, confidential customer survey.

Saving water: How we're doing it

We're all working together to reduce water consumption—in fact, Seattle Public Utilities (SPU) and its 17 water district partners, the Saving Water Partnership, won the Environmental Protection Agency's WaterSense Partner of the Year for our creative water saving programs. Our business customers have really pulled their weight by contributing 40 percent of our conservation savings in 2008. SPU has done its job reducing distribution system leakage through our reservoir-covering program that reduces evaporation. And you, our customer, have continued to replace wasteful showerheads and washing machines, taken shorter showers, fixed leaks, washed full loads, and watered lawns wisely. Keep it up. Please visit www.savingwater.org for more information about water conservation.

EPA WaterSense 2008 PARTNER OF THE YEAR

Seattle Public Utilities

Healthier fish

Water conservation helps salmon, as well as your pocketbook. The foundation for a healthy salmon run is a healthy habitat—meaning water flow and water quality. Your actions to conserve water, particularly in the summer and early fall when flows are lowest, helps provide the habitat necessary for a healthy salmon population.

Seattle Public Utilities

Seattle Public Utilities
700 Fifth Avenue, Suite 4900
P.O. Box 34018
Seattle, WA 98124-4018

PRESORTED STANDARD
US POSTAGE PAID
SEATTLE, WA
PERMIT NO. 2129

For translation services please call 206-684-3000.

如需要口譯服務，請撥電話號碼206-684-3000。

통역 서비스를 원하시면 206-684-3000으로 전화하세요.

Wixii turjubaan afka ah ku saabsan, Fadlan la soo xariir taleefoonka: 206-684-3000.

Para servicios de interpretación por favor llame al 206-684-3000.

Para sa serbisyo ng tagapagpaliwanag, tumawag sa 206-684-3000.

Về dịch vụ phiên dịch xin gọi 206-684-3000.

Printed on 100% post-consumer paper using soy-based inks

Seattle Climate Action NOW
SeattleCAN.org

Saving water: How's our progress?

You're doing a great job of reducing water use: we use less water per person today than we used in the late 1950s. That's great for about a million reasons. Here are four of them:

It helps us be prepared for climate change, drought years and low snow levels.

It helps us manage water supplies even as our population grows—conservation is the cheapest source of new water.

It helps the salmon by enhancing stream flows.

It helps to hold down your costs.

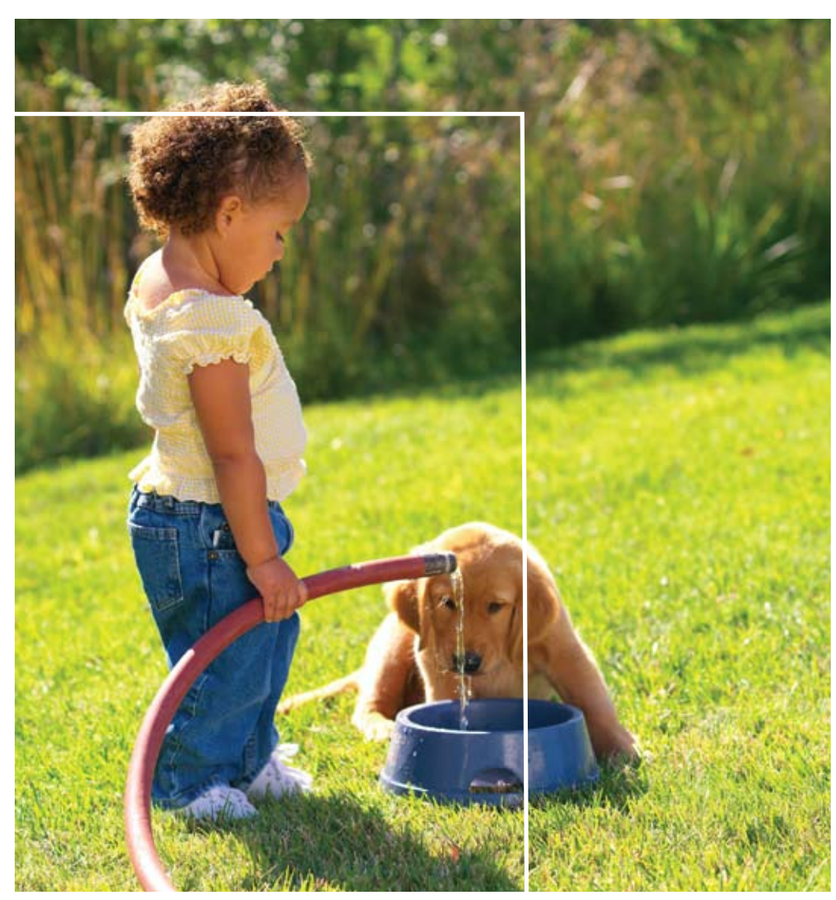

History of Seattle's water system

Foresight and events conspire for great water quality

Seattle's water system sprang from two major events: the Great Fire of 1889 and the Klondike Gold Rush of 1897. The first showed the dire necessity for a municipally-owned, gravity-fed water supply. The second helped provide the funds to pay for it. Though it was initially expensive to purchase the land and build the pipeline, the Cedar River system is now one of the most pristine watersheds in the nation.

Why we produce this report

The publication of this annual water quality report is required by state and federal regulations. Printed with soy-based inks on 100-percent post-consumer paper, this report is designed to give you essential information on your public drinking water.

The sources of drinking water (both tap water and bottled water) include rivers, lakes, streams, ponds, reservoirs, springs, and wells. As water travels over the surface of the land or through the ground, it dissolves naturally occurring minerals and, in some cases, radioactive material, and can pick up substances resulting from the presence of animals or from human activity.

In order to ensure that tap water is safe to drink, the Environmental Protection Agency and/or the Washington State Department of Health prescribe regulations that limit the amount of certain contaminants in water provided by public water systems. The Food and Drug Administration and/or the Washington State Department of Agriculture regulations establish limits for contaminants in bottled water that must provide the same protection for public health.

Drinking water, including bottled water, may reasonably be expected to contain at least small amounts of some contaminants. The presence of contaminants does not necessarily indicate that water poses a health risk. More information about contaminants and potential health effects can be obtained by calling the Environmental Protection Agency's Safe Drinking Water Hotline (800-426-4791).

Reservoir covering

As resources get stretched, every project we use taxpayer dollars for has to offer multiple benefits. Our reservoir-covering program—which will create 76-acres of new public open space—is one example of a multiple-benefit project. Reservoir covering improves water quality and saves costs by reducing chlorine requirements and increases security. And when they are covered with grass, reservoirs become open space we all can enjoy. Talk about a win-win!

Of our thirteen reservoirs, nine are covered today, two are in construction and two will be taken out of service, because they are no longer needed. You can see how well this works by enjoying Cal Anderson Park, on Capitol Hill.

Seattle Public Utilities

Important facts to know about your water quality...

Seattle Public Utilities

Raw water

This part of the chart is for our water at the source, before it's treated. Because our water comes from large, protected watersheds, our raw water starts cleaner than most municipalities. In Seattle's surface water supplies, the potential sources of contamination include: microbial contaminants, such as viruses, bacteria, and protozoa from wildlife; inorganic contaminants, such as salts and metals, which are naturally occurring; and organic contaminants, which result from chlorine combining with the naturally occurring organic matter.

Finished water

After treatment, our high-quality finished water is ready for consumption. There are very few contaminants in our finished water, and those we do detect are at levels well below the allowable amount.

Trihalomethanes

You have to treat surface water with chlorine to prevent microbial growth. But a by-product of the chlorination process is trihalomethanes and haloacetic acids, which are linked to certain cancers. In Seattle's water, because it starts off cleaner and we cover our reservoirs, we can use less chlorine and as a result, we have rates of these compounds well within safe ranges.

Lead

There isn't any lead in our water mains, however the pipes in many older homes do contain lead. While we raise the pH of our water to reduce pipe corrosion, you may still have lead in your water. If you are concerned about lead in your pipes, you can send your water to a certified lab for testing.

		EPA's Allowable Limits		Levels in Cedar Water		Levels in Tolt Water		
Detected Compounds	Units	MCLG	MCL	Average	Range	Average	Range	Typical Sources
Raw Water								
Total Organic Carbon	ppm	NA	TT	0.8	0.4 to 1.3	1.3	1.1 to 1.5	Naturally present in the environment
Cryptosporidium	#/100L	NA	NA	ND	ND to 2	ND	ND	Naturally present in the environment
Finished Water								
Turbidity	NTU	NA	TT	0.4	0.2 to 2.6	0.06	0.04 to 0.23	Soil runoff
Fluoride	ppm	4	4	0.97	0.8 to 1.0	1.0	0.9 to 1.1	Water additive, which promotes strong teeth
Bromate	ppb	0	10	0.05	ND to 0.7	0.13	ND to 0.77	By-product of drinking water disinfectoin
Barium	ppb	2000	2000	1.5	one sample	1.5	one sample	Erosion of natural deposits
Nitrate	ppm	10	10	ND	one sample	0.1	one sample	Erosion of natural deposits
Total Trihalomethanes	ppb	NA	80	28	8 to 58	45	7 to 60	By-products of drinking water chlorination
Haloacetic Acids(5)	ppb	NA	60	18	9 to 47	34	7 to 48	
Total Coliform	% positive samples	0	5%	Highest Month = 2.1% Annual Average = 0.29%				Naturally present in the environment
Chlorine	ppm	MRDLG = 4	MRDLG = 4	Average = 0.9 Range = 0 to 1.9				Water additive used to control microbes

Note: Cryptosporidium was detected in one of three samples from the Cedar and zero of four samples from the Tolt.

Definitions:
MCLG: Maximum Contaminant Level Goal - The level of a contaminant in drinking water below which there is no known or expected risk to health. MCLGs allow for a margin of safety.
MCL: Maximum Contaminant Level - The highest level of a contaminant that is allowed in drinking water. MCLs are set as close to the MCLGs as feasible using the best available treatment technology.
MRDL: Maximum Residual Disinfectant Level - The highest level of a disinfectant allowed in drinking water. There is convincing evidence that addition of a disinfectant is necessary for control of microbial contaminants.
MRDLG: Maximum Residual Disinfectant Level Goal - The level of a drinking water disinfectant below which there is no known or expected risk to health. MRDLGs do not reflect the benefits of the use of disinfectants to control microbial contaminants.

TT: Treatment Technique - A required process intended to reduce the level of a contaminant in drinking water.
NTU: NTU: Nephelometric Turbidity Unit - Turbidity is a measure of how clear the water looks. The turbidity MCL that applied to the Cedar supply in 2008 was 5 NTU, and for the Tolt it was 0.3 NTU for at least 95% of the samples in a month. 100% of the samples from the Tolt in 2008 were below 0.3 NTU.
NA: Not Applicable
ND: Not Detected
ppm: 1 part per million = 1 mg/L = 1 milligram per liter
ppb: 1 part per billion = 1 ug/L = 1 microgram per liter
1 ppm =1000 ppb

Lead and Copper Monitoring Results					
Parameter and Units	MCLG	Action Level+	2007 Results*	Homes Exceeding Action Level	Source
Lead, ppb	0	15	6	1 of 50	Corrosion of household plumbing systems
Copper, ppm	1.3	1.3	0.14	0 of 50	

* 90th Percentile: i.e. 90 percent of the samples were less than the values shown.
\+ The concentration of a contaminant which, if exceeded, triggers treatment or other requirements which a water system must follow.

What is missing from this chart?

No news is good news. More than 179 things we test for are absent from Seattle's water, and so are not on the chart. We looked for pharmaceuticals, fecal coliform, phthalates (bottle plastics linked to certain cancers—one more reason to drink tap water!), bisphenol A, vinyl chloride, arsenic and cyanide, and found none.

Cryptosporidium

Although very low levels of Cryptosporidium have been detected in our raw water, our treatment processes are very effective at destroying any that are found. Some people may be more vulnerable to contaminants in drinking water than the general population. Immuno-compromised persons such as persons with cancer undergoing chemotherapy, persons who have undergone organ transplants, people with HIV/AIDS or other immune system disorders, some elderly, and infants can be particularly at risk from infections. These people should seek advice about drinking water from their health care providers. Environmental Protection Agency/ Centers for Disease Control guidelines on appropriate means to lessen the risk of infection by Cryptosporidium and other microbial contaminants are available from the Safe Drinking Water Hotline (800-426-4791).

Chlorine

Chlorine prevents water borne diseases like cholera, giardiasis, and salmonellosis. But too much makes the water smell and taste bad, and it can combine with organic carbons to produce additional contaminants. Our chlorine is at one quarter the allowable limit.

Testing methodology

We test the water at different stages and locations. First, we test the raw water at the source. Then, we test the water after it's been treated by ozonation, UV, filtration and chlorine to ensure we're well within EPA standards for contaminants. Then we sample the water at dozens of distribution sites and at the reservoirs to make sure the quality is maintained. And finally, to check for lead and copper, we test at certain high-risk households. While SPU is not responsible for water quality issues connected to household pipes, we make sure the water getting to houses meets EPA standards.

Want to find out more?

Visit www.seattlewater.org

About our water

Our watersheds are a thing of beauty: two pristine, Cascade Mountain, snow-fed watersheds, with none of the development runoff, garbage, sewage, or other sources of contaminants that might impact our water's quality. The majority of our water comes from the Cedar River watershed; the rest from the Tolt River watershed. We also have three wells, used for less than one percent of our water usage.

Besides SPU's own testing, water sources are also assessed by the state Department of Health (DOH). According to DOH, all surface waters in Washington are given a susceptibility rating of "high," regardless of whether contaminants have been detected or whether there are any sources of contaminants in the watershed. The Seattle wells have been given a susceptibility rating of "low," because of the type of acquifer, depth of well, and lack of contaminant detection. Information on the source water assessments is available from the DOH website at https://fortress.wa.gov/doh/eh/dw/swap/maps/.

These results are for those aspects of water quality regulated by the government. For other water quality information, please go to www.seattlewater.org or call 206-615-0827.

Water quality monitoring data can be difficult to interpret. To make all the information fit in one table, we used many acronyms that are defined below the table. In Seattle, if you live south of Green Lake, your water probably comes from the Cedar River. Areas north of Green Lake usually receive Tolt water. Each source can provide water to other areas in Seattle if needed.

Saving water = saving money

As the charts show, we're on track with our water conservation goals. This is due to both your improving water usage habits, as well as a softer economy. A special thank you is due to apartment building owners this year, as many of them took advantage of our multifamily showerhead and high-efficiency toilet programs.

SPU supplied 45.1 billion gallons of drinking water in 2008, of which 1.5 billion gallons were lost to leakage or were otherwise unaccounted for. This represents a system wide leakage rate of 3%*, low compared with most other water utilities. And we are working to reduce it even more.

*Note that the system wide leakage rate was incorrectly reported as 7% in the copy of this report mailed out to customers..

Total Seattle Regional Water System Annual Demand in Millions of Gallons per Day: 1930-2008

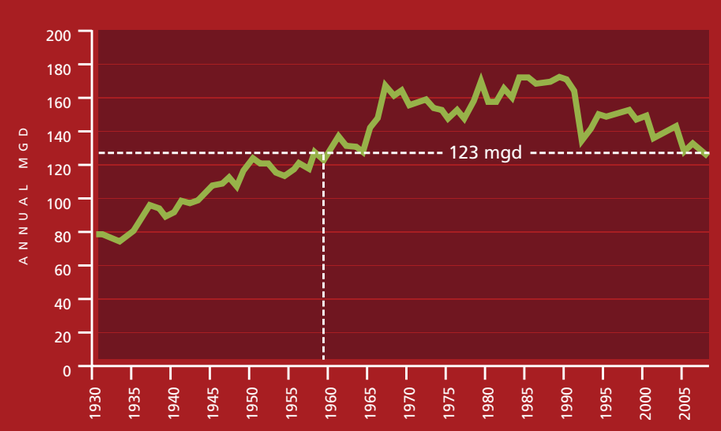

Growth in Population and Water Consumption Seattle Regional Water System: 1975 - 2008

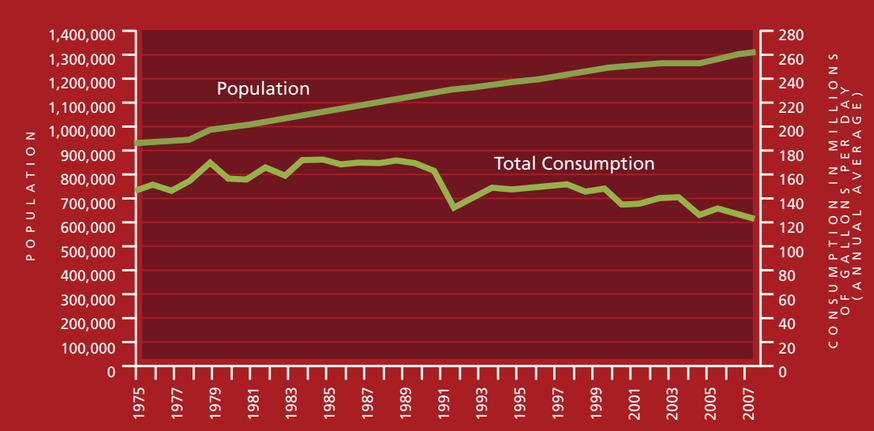

In 2008, the water conservation program achieved 0.75 million gallons per day (mgd) of annual savings. Since the program began in 2000, we have achieved an estimated 8.4 mgd toward the cumulative 2010 goal of 11 mgd.

Seattle Public Utilities

Seattle Public Utilities
700 Fifth Avenue, Suite 4900
P.O. Box 34018
Seattle, WA 98124-4018

PRESORTED
STANDARD
US POSTAGE PAID
SEATTLE, WA
PERMIT NO. 2129

For translation services please call 206-684-3000.

如需要口譯服務，請撥電話號碼206-684-3000.

통역 서비스를 원하시면 **206-684-3000**으로 전화하세요.

Wixii turjubaan afka ah ku saabsan, Fadlan la soo xariir taleefoonka: 206-684-3000.

Para servicios de interpretación por favor llame al 206-684-3000.

Para sa serbisyo ng tagapagpaliwanag, tumawag sa 206-684-3000.

Về dịch vụ phiên dịch xin gọi 206-684-3000.

Printed on 100 percent post-consumer recycled paper using soy-based inks.

You're receiving this mailed report as part of a federal reporting requirement for municipal water systems.

Seattle Climate Action NOW
SeattleCAN.org

Message from the Director

When you talk about water quality, it starts with the source—where your water comes from. Other regions' water sources have to deal with the results of sewage, industrial discharge, lawn chemical runoff, and other contaminants. Not so in Seattle, which gets its water from rain and snow falling on protected and pristine watershed land in the Cascades. Because our sources are cleaner to start with, we don't have to treat them as much, and that combination gives us some of the highest quality surface source water in the nation. And because our water is mostly gravity fed, we don't use a lot of energy to deliver it to you. I'm happy to say that our water quality, as indicated in this federally required report, continues to be some of the best water in the world, a great value, and one more reason to celebrate our region's famous quality of life.

Ray Hoffman
Director, Seattle Public Utilities

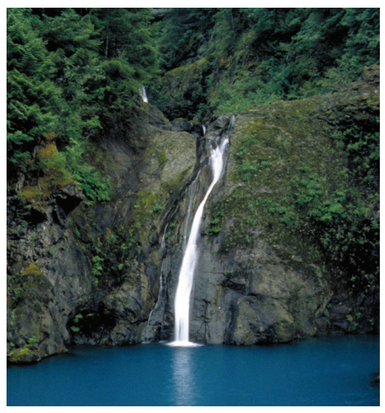

Help us serve you better

Take part in our quick, confidential survey and we'll use the results to improve our service. Find it at **www.seattlewater.org**.

Seattle Public Utilities

Celebrating Seattle's Water: Drinking Water Quality Report **2009**

Why we produce this report

The federal Environmental Protection Agency (EPA) sets regulations on water quality and ensures you are informed about your community's water quality through this required annual report. Since we are mandated to send it, we use the opportunity to share other important information about your water as well. It costs $0.32 (including mailing) to get it to your home. In line with Seattle's commitment to sustainability, this report is printed with soy-based inks on 100 percent post-consumer recycled paper.

Seattle Public Utilities

What you do to conserve helps salmon, too

Ample clean water is essential for healthy salmon populations. Everything you do to use water efficiently helps keep plenty of water in our rivers and streams. Conserving is especially important in the summer and early fall, when flows are lowest.

From watershed to water glass

Have you ever turned on the tap and wondered about the journey that water took to get to your glass? Well, here's the story of our water system:

Seattle's water comes almost exclusively from two pristine Cascade Mountain watersheds. About 70 percent comes from the Cedar River watershed, and provides water for neighborhoods south of Green Lake. The remaining 30 percent comes from the South Fork of the Tolt River watershed for North Seattle, with a small percentage (< one percent) from our wells. The wells, which were not used in 2009, are located in Burien and are used only occasionally as a supplemental supply.

Since both watersheds are publicly owned by the City of Seattle, Seattle Public Utilities (SPU) has protected them by prohibiting agricultural, industrial, residential and recreational activities. This vigorous protection program means there is little opportunity for contaminants to enter the water. However, there is always some potential for naturally occurring sources of contamination.

The sources of drinking water (both tap and bottled) include rivers, lakes, streams, ponds, reservoirs, springs, and wells. As water travels over the surface of the land or through the ground, it dissolves naturally occurring minerals and, in some cases, radioactive material, and can pick up substances resulting from the presence of animals or from human activity.

In Seattle's surface water supplies, the potential sources of contamination include:

- **microbial contaminants, such as viruses, bacteria, and protozoa from wildlife;**
- **inorganic contaminants, such as salts and metals, which are naturally occurring; and**
- **organic contaminants, which result from chlorine combining with the naturally occurring organic matter.**

Our water travels from the Cascade Mountain watersheds and then gets treated at either the Tolt Reservoir or Lake Youngs, east of Renton, to ensure it is free of contaminants, before being sent through water mains to the pipes in your home.

Bottle versus tap—the facts

For those of us looking to save money (and who isn't, these days?), drinking tap water instead of bottled water is the smart choice. Bottled water costs up to 1,000 percent more than tap water. Add to that the environmental cost of the plastic, manufacturing, distribution and disposal of those bottles and we think you'll agree: with tap water as clean and tasty as ours, why not save money and be green at the same time?

A protected source for water offers other good news

You may have read in the news of concern around the country about pharmaceuticals and personal care products getting into water supplies. The good news for the Seattle region is that because of our protected watersheds, there are no opportunities for these contaminants to get into our water system. One less thing to worry about!

In case of emergency...

If there's a flood, earthquake or other disaster, it may be three days or more before normal services—like water and electricity—come back on line. So be prepared: follow the rule of thumb of keeping on hand one gallon of drinking water per day for each person in your household.

Seattle Public Utilities

About our drinking water quality

Seattle Public Utilities

Who's making sure our water is safe to drink?

To ensure that tap water is safe to drink, the Environmental Protection Agency and the Washington State Department of Health prescribe regulations that limit the amount of certain contaminants in water provided by public water systems. Food and Drug Administration and the Washington State Department of Agriculture regulations establish limits for contaminants in bottled water that must provide the same protection for public health.

As part of this process, the state reviews municipalities' water sources, through the Source Water Assessment Program conducted by the Department of Health (DOH) Office of Drinking Water. According to DOH, all surface waters in Washington, including Seattle's, are given a contaminant susceptibility rating of "high," regardless of whether contaminants have been detected or whether there are any sources of contaminants in the watershed. Information on the source water assessments is available from the DOH Web site at **https://fortress.wa.gov/doh/eh/dw/swap/maps/**.

Are contaminants a health risk?

Drinking water, including bottled water, may reasonably be expected to contain at least small amounts of some contaminants. The presence of contaminants does not necessarily indicate that water poses a health risk.

Some people may be more vulnerable to contaminants in drinking water than the general population. Immuno-compromised persons such as persons with cancer undergoing chemotherapy, persons who have undergone organ transplants, people with HIV/AIDS or other immune system disorders, some elderly, and infants can be particularly at risk from infections. These people should seek advice about drinking water from their health care providers. More information about contaminants and potential health effects can be obtained by calling the Environmental Protection Agency's Safe Drinking Water Hotline (800-426-4791).

Our results

The results of water quality monitoring in 2009 are shown in the table below. These results are for parameters that are regulated by the federal and state agencies and are detected in our water. In addition to what is reported here, SPU tests for more than 100 other harmful contaminants, none of which we found in our supply! For that list, or additional water quality information, please check our Web site at **www.seattlewater.org**.

		EPA's Allowable Limits		Levels in Cedar Water		Levels in Tolt Water		
Detected Compounds	Units	MCLG	MCL	Average	Range	Average	Range	Typical Sources
Raw Water								
Total Organic Carbon	ppm	NA	TT	0.6	0.3 to 0.9	1.3	1.2 to 1.6	Naturally present in the environment
Cryptosporidium	#/100L	NA	NA	ND	ND	ND	ND	Naturally present in the environment
Finished Water								
Turbidity	NTU	NA	TT	0.4	0.2 to 2.6	0.07	0.05 to 0.19	Soil runoff
Fluoride	ppm	4	4	0.98	0.9 to 1.0	1.0	0.8 to 1.1	Water additive, which promotes strong teeth
Barium	ppb	2000	2000	1.2	one sample	1.0	one sample	Erosion of natural deposits
Nitrate	ppm	10	10	0.07	one sample	0.15	one sample	Erosion of natural deposits
Total Trihalomethanes	ppb	NA	80	31	26 to 38	35	22 to 52	By-products of drinking water chlorination
Haloacetic Acids(5)	ppb	NA	60	23	9 to 41	33	23 to 38	
Total Coliform	% positive samples	0	5%	Highest Month = 0.4% Annual Average = 0.07%				Naturally present in the environment
Chlorine	ppm	MRDLG = 4	MRDL = 4	Average = 0.95 Range = 0 to 2.2				Water additive used to control microbes

Note: Cryptosporidium was not detected in any samples from the Cedar or the Tolt rivers.

The Small Print: To make all the information fit in one table, we use many acronyms, defined here.

MCLG: Maximum Contaminant Level Goal - The level of a contaminant in drinking water below which there is no known or expected risk to health. MCLGs allow for a margin of safety.
MCL: Maximum Contaminant Level - The highest level of a contaminant that is allowed in drinking water. MCLs are set as close to the MCLGs as feasible using the best available treatment technology.
MRDL: Maximum Residual Disinfectant Level - The highest level of a disinfectant allowed in drinking water. There is convincing evidence that addition of a disinfectant is necessary for control of microbial contaminants.
MRDLG: Maximum Residual Disinfectant Level Goal - The level of a drinking water disinfectant below which there is no known or expected risk to health. MRDLGs do not reflect the benefits of the use of disinfectants to control microbial contaminants.

TT: Treatment Technique - A required process intended to reduce the level of a contaminant in drinking water.
NTU: Nephelometric Turbidity Unit - Turbidity is a measure of how clear the water looks. The turbidity MCL that applied to the Cedar supply in 2009 was 5 NTU, and for the Tolt it was 0.3 NTU for at least 95% of the samples in a month. 100% of the samples from the Tolt in 2009 were below 0.3 NTU.
NA: Not Applicable
ND: Not Detected
ppm: 1 part per million = 1 mg/L = 1 milligram per liter
ppb: 1 part per billion = 1 ug/L = 1 microgram per liter
1 ppm =1000 ppb

Lead and Copper Monitoring Results From Household Taps

Parameter and Units	MCLG	Action Level+	2007 Results*	Homes Exceeding Action Level	Source
Lead, ppb	0	15	6	1 of 50	Corrosion of household plumbing systems
Copper, ppm	1.3	1.3	0.14	0 of 50	

* 90th Percentile: i.e. 90 percent of the samples were less than the values shown.
\+ The concentration of a contaminant which, if exceeded, triggers treatment or other requirements which a water system must follow.

Lead

Although there is no detectable lead in our source water, tests from household taps show there can be low levels of lead and copper in tap water, primarily because of corrosion of household plumbing systems. The majority of homes have some risk of introducing small amounts of lead to water that sits in pipes for longer than two hours. Where you live, when your plumbing was installed and what type of plumbing you have, all play a part in determining the potential for lead to get in the water from your plumbing. SPU treats the water to minimize the tendency for lead to enter the water, and results show that that we have been successful.

If present, elevated levels of lead can cause serious health problems, especially for pregnant women and young children. Lead in drinking water is primarily from materials and components associated with service lines and home plumbing. SPU is responsible for providing high quality drinking water, but cannot control the variety of materials used in plumbing components. When your water has been sitting for several hours, you can minimize the potential for lead exposure by flushing your tap for 30 seconds to two minutes before using water for drinking or cooking.

If you are concerned about lead in your water, you may wish to have your water tested. Information on lead in drinking water, testing methods, and steps you can take to minimize exposure is available from the Safe Drinking Water Hotline (800-426-4791) or at **www.epa.gov/safewater/lead**.

Want to learn more?

Visit www.seattlewater.org

A conversation about conservation

One of the reasons we enjoy a high quality of life in Seattle is that everyone works together to conserve our resources. That's true of our water, as well. The average American uses around a hundred gallons of water a day. In the Seattle region, it's less than 70 gallons a day, thanks to high-efficiency showerheads, toilets and clothes washers, and water-wise gardens — we're a conserving community! And, we can do more to ensure there's plenty of clean water for salmon, the environment and future generations.

In 2009, Seattle's regional water conservation program – including 17 surrounding water utility partners in the Saving Water Partnership – achieved an estimated 610,000 gallons per day of annual savings. Since the beginning of the program in 2000, we have saved an estimated 9.0 million gallons per day (mgd) toward the cumulative 2010 target of 11 mgd. To put that into perspective: that's enough water to serve a city the size of Renton.

SPU supplied 47.3 billion gallons of drinking water in 2009, of which, 2.5 billion gallons were classified as leakage. Our leakage rate system-wide has averaged four percent over the last three years— very low compared with most other water utilities and below the 10 percent state standard. Leakage includes water used in fire fighting, street cleaning, construction, water main and hydrant flushing, and metering inaccuracies, as well as actual leakage from reservoirs, water mains and service lines.

Why conserve?

A recent issue of National Geographic reports that only one percent of the world's water is both fresh and accessible. In the big picture, fresh water is a precious and finite resource. On a more local level, even in a wet climate such as ours, water conservation is important, as we tend to have dry summers and a finite amount of water storage. Conservation is also an important adaptation strategy to a changing climate in the Pacific Northwest. Water conservation helps us ensure plentiful supplies of high quality water to meet our region's growing population today and into the future, while ensuring there's enough water to support salmon runs. On a personal level, saving water can help you manage your utility bills.

Can you be more efficient?

An average single-family household in Seattle uses 4,040 gallons a month in the winter and 5,759 gallons a month in the summer. Is your water use above average? Or do you want to increase your water use efficiency? Here are some easy ways to save water. You can find more ways to conserve at **www.savingwater.org**, including rebates on water-saving appliances and fixtures.

- Wait to wash clothes and dishes until you have a full load.
- Switch to an efficient showerhead – and take a shorter shower.
- Match the right plant to the right place in your garden. Subscribe to the Savvy Gardener Electronic Newsletter: **www.savingwater.org/outside_savvygardener.htm**.
- Adjust your lawn and/or gardening watering schedule for optimum efficiency (see how at **www.iwms.org**).
- Don't run the water while brushing your teeth.
- Find and repair water leaks: **www.savingwater.org/inside.htm#leaks**.
- Look for the WaterSense label on new appliances: **www.epa.gov/watersense/product_search.html**.

Top three things you can do indoors

Inefficient and leaky fixtures can cost you.

Replace old toilets

Replacing an old toilet with a new WaterSense model saves an average household* almost 30 gallons per day – and up to $260 a year.

EPA WaterSense

Upgrade washers

Upgrading an old clothes washer to a new WashWise-qualified machine saves an average household* 27 gallons per day. WashWise-certified machines also save energy and use less detergent.

WASHWISE

Find and fix leaks

Fixing leaks saves an average of 10 gallons per day per household. Check your toilet for leaks yearly. Visit **www.savingwater.org** to find out how.

Top three things you can do in your yard

Plan your garden so you need less water in the first place!

Right plant, right place

Match plants to the conditions in your yard – if you have wet, shady areas, choose plants that thrive there, and the same with dry, sunny areas. If plants are well-suited to their place in your yard, you won't need to water so much.**

Cultivate your soil

Healthy soil holds water and gives plants the nutrients they need to stay beautiful. Add compost and mulch to your beds to slow the weeds and hold water near plant roots, where it's needed.**

Reduce water waste

When you water, make sure the water gets to the roots, where plants need it. Drip irrigation systems avoid shooting water up into the air, where much of it evaporates.**

**Based on a four-person household.*
*** Water savings vary depending on the size and design of your landscape.*

Construction of the 50-million gallon Beacon Hill underground reservoir. Protecting the Beacon, Myrtle, Maple Leaf and West Seattle Reservoirs cost approximately $140 million.

Seattle water: Less than a penny a gallon delivered to your tap

It's strange but true: Water is necessary to life, yet it costs very little compared with its value. Good quality water is one of the best investments a community can make—it protects us from water-borne illnesses and spares us the high cost of bottled water.

This year's Drinking Water Quality Report, a federally required document that gives you data about Seattle's water, shows that we continue to enjoy safe, high-quality water due to the investment we have made in watershed protection and treatment.

Seattle's drinking water system—one of the best in the nation—has recently been upgraded:

- We have state-of-the art water treatment facilities.
- Most of our storage reservoirs are protected with hard covers.
- Our water supply is expected to meet our needs until at least 2060.

Your water rates help us pay for these investments that will provide clean, safe, high-quality drinking water for generations to come.

Seattle Public Utilities

Seattle Public Utilities
700 Fifth Avenue, Suite 4900
P.O. Box 34018
Seattle, WA 98124-4018

Seattle water is clean, safe, and costs less than a penny a gallon.
For translation services please call 206-684-3000.

El agua de Seattle es limpia, segura y cuesta menos de un centavo el galón.
Para servicios de interpretación por favor llame al 206-684-3000.

Ang tubig sa Seattle ay malinis, ligtas, at nagkakalahaga ng wala pang isang sentimos ang bawat galon.
Para sa serbisyo ng tagapagpaliwang, tumawag sa 206-684-3000.

Nguồn nước của Seattle sạch, an toàn và có giá chưa tới một xu một gallon.
Và dịch vụ phiên dịch xin gọi 206-684-3000.

비록 물의 수도꼭지는 매 준히 고마운 하나 때 도 한 서 할 하 나 다.
통역 서비스를 원하시면 206-684-3000으로 전화하세요.

自来水干净、安全、每加仑花不到一分钱。
如需要口译服务，请致电电话号码206-684-3000

Biyaha Seattle waa nadiif, waa amaan, qiimahana waa ka jaban yahay hal senti baileii galan.
Wixii turjubaan afka ah ku saabsan, Fadlan la soo xariir taleefoonka: 206-684-3000.

Learn more about your water at www.seattle.gov/util
Printed on 100 percent post-consumer recycled paper using soy-based inks.
You're receiving this mailed report as part of a federal reporting requirement for municipal water systems.

ECRWSS
Postal Customer

PRESORTED
STANDARD
US POSTAGE PAID
SEATTLE, WA
PERMIT NO. 2129

Seattle Public Utilities

SEATTLE'S WATER— A GREAT VALUE.

Drinking Water Quality Report **2010**

Where your rate dollar goes

Seattle Public Utilities (SPU) provides great-tasting, safe water to your tap at less than a penny a gallon. Your water rates pay for maintaining our water system, from protecting, storing, treating, and delivering water to your tap, to customer service, security, tax and administration.

Rate assistance program
For those of our customers who are struggling with financial hardship, we're committed to providing rate assistance. For more information about the program, go to www.seattle.gov/mybill.

Keeping costs down
In response to budget challenges SPU has streamlined this year's report while ensuring that customers continue to get important information about their drinking water quality. This year's report cost $.30 per piece to produce and send to all of our customers, a 7 percent decrease from last year.

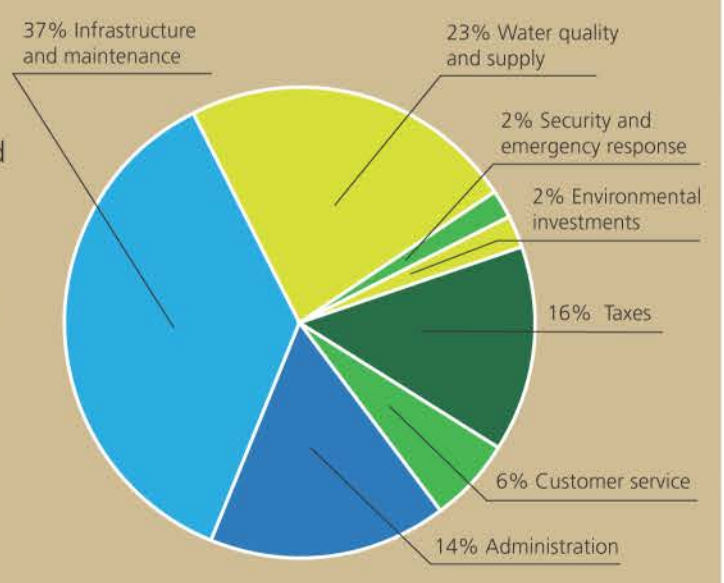

Seattle Public Utilities

Conserving water is a shared value

Conserving water helps us provide water for people, salmon, other wildlife and future generations. Conserving water also helps you manage your water bills. Together, we have saved an estimated 9.6 million gallons per day (mgd) since 2000, even though our population is growing. And since 2007, we've saved more than 3 mgd toward our 2012 goal of nearly 6 mgd, which was set by the Saving Water Partnership to meet state requirements. In 2010 alone, we saved an estimated 570,000 gallons per day. That's enough water to fill 20,000 bathtubs every day!

Stopping leaks in our water system is one way we work to conserve. SPU supplied 43.2 billion gallons of drinking water in 2010, of which 2.8 billion gallons were classified as leakage*. Our system-wide leakage rate has averaged 5 percent over the last three years, very low compared with most other water utilities and well below the 10 percent state standard.

At home, you can save water and money by fixing leaks. Did you know that a toilet that leaks one gallon a minute can cost you up to $800 a month in water and sewer charges? For advice on finding and fixing leaks around your home, including toilet leaks, visit www.savingwater.org.

* Leakage includes water used in fire fighting, street cleaning, construction, water main and hydrant flushing and metering inaccuracies, as well as actual leakage from reservoirs, water mains and service lines.

We've reduced fluoride levels

Since 1970, fluoride has been added to Seattle's water as a preventative against tooth decay. In response to a January 2011 proposed U.S. Department of Health and Human Services recommendation, we have lowered fluoride levels to 0.8 parts per million, the lowest level allowed by state law. This move was strongly supported by local health officials.

We are continuing to work with state and local public health agencies in preparation for a final federal recommendation on fluoride levels, which is expected in late summer or early fall of 2011.

Your opinion matters

Much of the language in this report is required by the Environmental Protection Agency (EPA), but we've done what we can to make it easier to understand and read. **Let us know how we're doing and what you think about Seattle Public Utilities and your water. Go to www.seattle.gov/util to answer a few questions that will help us serve you better.**

Seattle Public Utilities

Our drinking water quality reflects our investments

Here's the part that the EPA requires:

SPU measures for potential contaminants that may impact human health, taste or appearance of your drinking water.

In general, drinking water sources (including tap water and bottled water) include rivers, lakes, streams, ponds, reservoirs, springs, and wells. As water travels over the surface of the land or through the ground, it dissolves naturally occurring minerals and, in some cases, radioactive material, and can pick up substances resulting from the presence of animals or from human activity.

To ensure that tap water provided by public water systems is safe to drink, the U.S. Environmental Protection Agency and the Washington State Board of Health prescribe regulations that limit the amount of certain contaminants. U.S. Food and Drug Administration and the Washington State Department of Agriculture regulations establish similar limits on bottled water.

All drinking water, including bottled water, may reasonably be expected to contain at least small amounts of some contaminants. But the presence of contaminants does not necessarily indicate that water poses a health risk. For more information about contaminants and potential health effects call the Environmental Protection Agency's Safe Drinking Water Hotline (800-426-4791).

Two surface water sources provide the majority of water for SPU's system. In 2010, 62 percent was provided by the Cedar River. The remaining 38 percent came from the South Fork Tolt River. These two surface water sources begin in the Cascade Mountains and have very large protected watersheds. The system also has access to wells located in Burien that are only used to meet peak summer demand. The wells were not used in 2010.

Since both watersheds are publicly owned, SPU is able to safeguard our watersheds through a comprehensive protection program. This program prohibits agricultural, industrial, and recreational activities in the watersheds, and no one is allowed to live there. This means there is little opportunity for contaminants to enter the water. Even so, there is always some potential for natural sources of contamination.

In Seattle's surface water supplies, the potential sources of contamination include:

- microbial contaminants, such as viruses, bacteria, and protozoa from wildlife;
- inorganic contaminants, such as salts and metals, which are naturally occurring; and
- organic contaminants, which result from chlorine combining with the naturally occurring organic matter.

Our results

The results of monitoring in 2010 are shown in the adjacent table. These results are for parameters regulated by the federal and state agencies. For other water quality information, please check our web site *(www.seattle.gov/util)* or call **206-615-0827**. We can also send you a list of the more than 200 compounds for which we tested but did not find in our surface water supplies.

Water quality monitoring data can be difficult to interpret. To make all the information fit in one table, we used many acronyms that are defined below the table. In Seattle, if you live south of Green Lake, your water probably comes from the Cedar. Areas north of Green Lake usually receive Tolt water. Each source can provide water to other areas in Seattle if needed.

		EPA's Allowable Limits		Levels in Cedar Water		Levels in Tolt Water		
Detected Compounds	Units	MCLG	MCL	Average	Range	Average	Range	Typical Sources
Raw Water								
Total Organic Carbon	ppm	NA	TT	0.9	0.4 to 1.8	1.3	1.2 to 1.4	Naturally present in the environment
Cryptosporidium	#/100L	NA	NA	ND	ND	ND	ND	Naturally present in the environment
Finished Water								
Turbidity	NTU	NA	TT	0.4	0.2 to 4.5	0.07	0.04 to 0.11	Soil runoff
Fluoride	ppm	4	4	0.95	0.7 to 1.1	1.0	0.9 to 1.2	Water additive, which promotes strong teeth
Barium	ppb	2000	2000	1.8	one sample	1.3	one sample	Erosion of natural deposits
Nitrate	ppm	10	10	0.02	one sample	0.13	one sample	Erosion of natural deposits
Arsenic	ppb	0	10	0.5	one sample	ND	one sample	Erosion of natural deposits
Chromium*	ppb	100	100	0.8	one sample	0.6	one sample	Erosion of natural deposits
Total Trihalomethanes	ppb	NA	80	30	20 to 39	34	26 to 46	By-products of drinking water chlorination
Haloacetic Acids(5)	ppb	NA	60	21	6 to 34	30	18 to 30	
Total Coliform	% positive samples	0	5%	Highest Month = 0.8% Annual Average = 0.14%				Naturally present in the environment
E. Coli	# of samples	0	0	2 positive samples out of 2833 total samples collected in 2010**				Human and animal fecal waste
Chlorine	ppm	MRDLG = 4	MRDL = 4	Average = 0.84 Range = 0 to 2.2				Water additive used to control microbes

Note: *Cryptosporidium* was not detected in any samples from the Cedar or the Tolt rivers.
* The value reported reflects naturally-occurring total chromium and not hexavalent chromium.
** Follow-up sampling showed no indication of contamination. Compliance was maintained.

Definitions

MCLG: Maximum Contaminant Level Goal - The level of a contaminant in drinking water below which there is no known or expected risk to health. MCLGs allow for a margin of safety.
MCL: Maximum Contaminant Level - The highest level of a contaminant that is allowed in drinking water. MCLs are set as close to the MCLGs as feasible using the best available treatment technology.
MRDL: Maximum Residual Disinfectant Level - The highest level of a disinfectant allowed in drinking water. There is convincing evidence that addition of a disinfectant is necessary for control of microbial contaminants.
MRDLG: Maximum Residual Disinfectant Level Goal - The level of a drinking water disinfectant below which there is no known or expected risk to health. MRDLGs do not reflect the benefits of the use of disinfectants to control microbial contaminants.

TT: Treatment Technique - A required process intended to reduce the level of a contaminant in drinking water.
NTU: Nephelometric Turbidity Unit - Turbidity is a measure of how clear the water looks. The turbidity MCL that applied to the Cedar supply in 2009 was 5 NTU, and for the Tolt it was 0.3 NTU for at least 95% of the samples in a month. 100% of the samples from the Tolt in 2009 were below 0.3 NTU.
NA: Not Applicable
ND: Not Detected
ppm: 1 part per million = 1 mg/L = 1 milligram per liter
ppb: 1 part per billion = 1 ug/L = 1 microgram per liter
1 ppm =1000 ppb

Lead and Copper Monitoring Results

Parameter and Units	MCLG	Action Level+	2010 Results++	Homes Exceeding Action Level	Source
Lead, ppb	0	15	5	0 of 50	Corrosion of household plumbing systems
Copper, ppm	1.3	1.3	0.14	0 of 50	

\+ The concentration of a contaminant which, if exceeded, triggers treatment or other requirements which a water system must follow.
++ 90th Percentile: i.e. 90 percent of the samples were less than the values shown.

Other information about your water

Some people may be more vulnerable to contaminants in drinking water than the general population. Immuno-compromised persons such as persons with cancer undergoing chemotherapy, persons who have undergone organ transplants, people with HIV/AIDS or other immune system disorders, some elderly, and infants can be particularly at risk from infections. These people should seek advice about drinking water from their health care providers. For Environmental Protection Agency/Centers for Disease Control guidelines on appropriate means to lessen the risk of infection by *Cryptosporidium* and other microbial contaminants, call the Safe Drinking Water Hotline (800-426-4791).

Washington's Source Water Assessment Program is conducted by the Department of Health (DOH) Office of Drinking Water. According to DOH, all surface waters in Washington are given a susceptibility rating of "high", regardless of whether contaminants have been detected or whether there are any sources of contaminants in the watershed. The Seattle wells have been given a susceptibility rating of "low" because of the type of aquifer, depth of well, and lack of contaminant detection. Information on the source water assessments is available from the DOH website at *https://fortress.wa.gov/doh/eh/dw/swap/maps*.

If present, elevated levels of lead can cause serious health problems, especially for pregnant women and young children. Lead in drinking water is primarily from materials and components associated with service lines and home plumbing. SPU is responsible for providing high quality drinking water, but cannot control the variety of materials used in plumbing components. When your water has been sitting for several hours, you can minimize the potential for lead exposure by running your tap for 30 seconds to two minutes before using water for drinking or cooking. If you are concerned about lead in your water, you may wish to have your water tested. Information on lead in drinking water, testing methods, and steps you can take to minimize exposure is available from the Safe Drinking Water Hotline (800-426-4791) or at http://www.epa.gov/safewater/lead.

Although there is no detectable lead in our source water, tests show there are sometimes elevated levels of lead and copper in some samples, primarily because of corrosion of household plumbing systems. These results show that it is very important that homeowners, business owners, and others be aware of their type of plumbing, and how the plumbing affects their drinking water quality.

Seattle Public Utilities

Want to learn more?
Visit www.seattle.gov/util

Seattle Public Utilities

MOUNTAIN FRESH WATER
DELIVERED RIGHT TO YOUR FAUCET

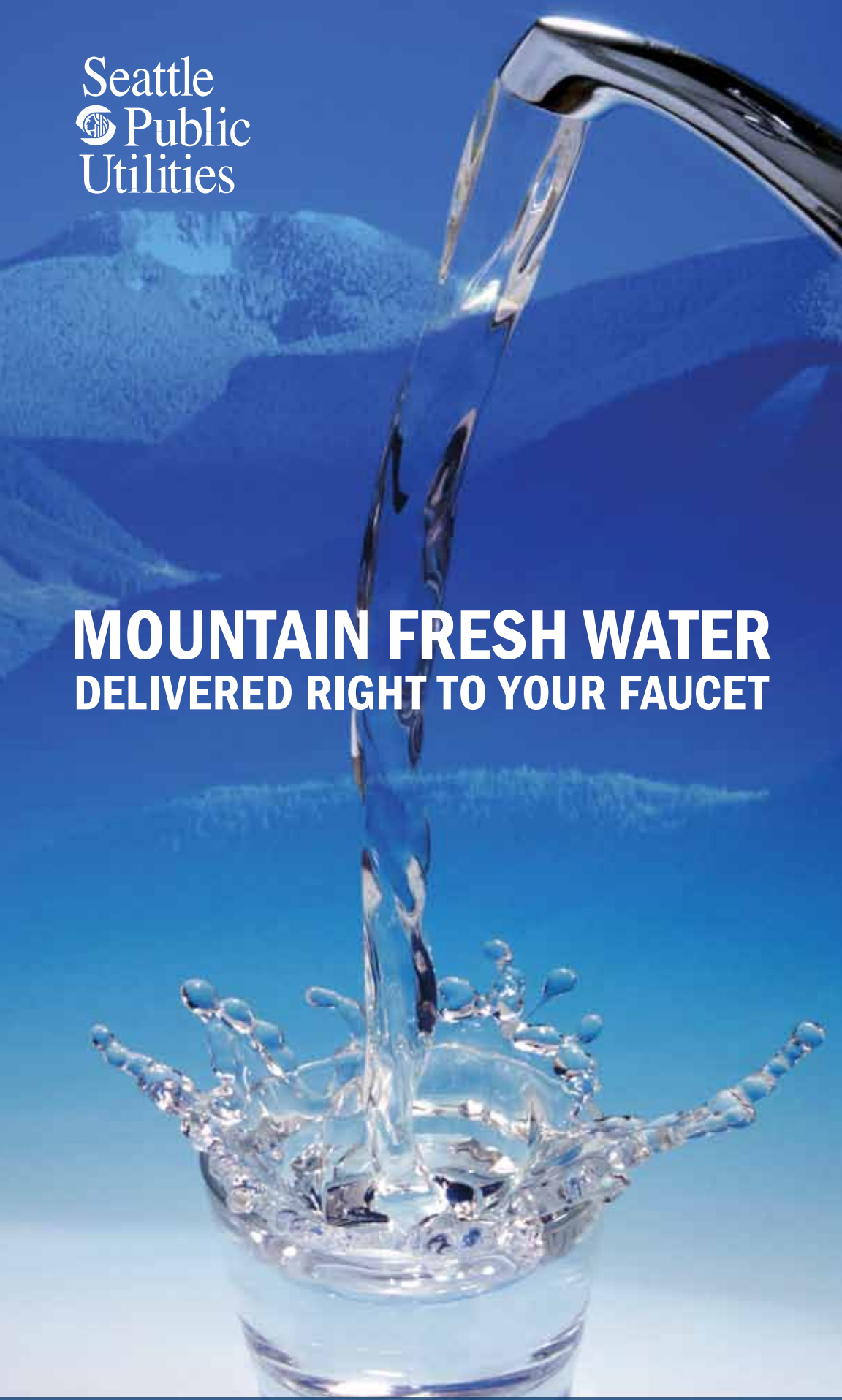

DRINKING WATER QUALITY REPORT 2011

WASTING LESS, ENJOYING IT MORE

No one likes to waste things, especially something as precious as our great water. And you, our residential and commercial customers, continue to do a great job of conserving water. In 2011, you saved an estimated 1.4 million gallons per day (mgd) as part of the Saving Water Partnership (a group of local water utilities that purchase water from Seattle and work together to provide water conservation programs in Seattle and King County). That's enough water to supply 9,400 single-family homes.

In the past five years, we've collectively saved about 4.6 mgd toward our 2012 goal of nearly 6 mgd. Conservation saves you money, protects fish and wildlife, and helps ensure a reliable future supply even as our region grows. We're doing our part as well: Seattle Public Utilities supplied 118 mgd of drinking water in 2011, with a leakage rate of only 6 percent—low compared with most other water utilities.

DRINK LOCAL

This year's Drinking Water Quality Report confirms the good news: Seattle's tap water continues to be some of the best in the nation. Not only is our water exceptional, it also tastes great, as measured by our taste test lab. Why is our water so good?

Where it comes from: Protected watersheds.

Treatment: Filtering, ozonation, and ultraviolet light as needed.

Testing: We test for hundreds of contaminants.

Delivery: Always available any time, right from your faucet.

This means you don't have to turn to expensive bottled water to get great quality, taste, and value.

WATER FACT:

Seattle's drinking water supply not only goes to your faucet, but flows downstream to provide habitat for fish and wildlife.

WHAT THE EPA WANTS YOU TO KNOW ABOUT YOUR WATER

To ensure that tap water is safe to drink, the Environmental Protection Agency and the Washington State Board of Health prescribe regulations that limit the amount of certain contaminants in water provided by public water systems. The Food and Drug Administration and/or the Washington State Department of Agriculture regulations establish limits for contaminants in bottled water that must provide the same protection for public health.

Sources of drinking water include rivers, lakes, streams, ponds, reservoirs, springs, and wells. As water travels over the surface of the land or through the ground, it dissolves naturally occurring minerals and, in some cases, radioactive material, and can pick up substances resulting from the presence of animals or from human activity.

Drinking water, including bottled water, may reasonably be expected to contain at least small amounts of some contaminants. The presence of contaminants does not necessarily indicate that water poses a health risk. More information about contaminants and potential health effects can be obtained by calling the **Environmental Protection Agency's Safe Drinking Water Hotline (800-426-4791)**.

WHERE OUR WATER COMES FROM—PROTECTED WATERSHEDS

Our water comes from two large, protected watersheds in the Cascade Mountains—the Cedar and Tolt rivers. In 2011, about 60 percent of our water came from the Cedar River, and 40 percent from South Fork Tolt River. The system also occasionally gets water from wells located in SeaTac, which are used to meet peak summer demand and were not used in 2011.

Since both watersheds are publicly owned, Seattle Public Utilities is able to vigorously protect them. We prohibit agricultural, industrial, and recreational activities in the watersheds, and no one is allowed to live there. This means there is little opportunity for contaminants to enter the water. Even so, there is always some potential for natural sources of contamination. In Seattle's surface water supplies, the potential sources of contamination include:

- Microbial contaminants, such as viruses, bacteria, and protozoa from wildlife.
- Inorganic contaminants, such as salts and metals, which are naturally occurring.
- Organic contaminants, which result from chlorine combining with the naturally occurring organic matter.

Some people may be more vulnerable to contaminants in drinking water than the general population. Immuno-compromised persons, such as those undergoing chemotherapy, organ transplant recipients, people with HIV/AIDS or other immune system disorders, some elderly, and infants can be particularly at risk from infections. These people should seek advice about drinking water from their health care providers. Environmental Protection Agency/Centers for Disease Control guidelines on appropriate means to lessen the risk of infection by Cryptosporidium and other microbial contaminants are available from the **Safe Drinking Water Hotline (800-426-4791)**.

The State Department of Health (DOH) Office of Drinking Water gives surface waters in Washington a susceptibility rating of "high," regardless of whether contaminants have been detected or whether there are any sources of contaminants in the watershed. The Seattle wells have been given a susceptibility rating of "low" because of the type of aquifer, depth of well, and lack of contaminant detection. Information on the source water assessments is available from the DOH website at **https://fortress.wa.gov/doh/eh/dw/swap/maps/**.

OUR RESULTS

The results of monitoring in 2011 are shown in the table on the next page. These results are for parameters regulated by the federal and state agencies. For other water quality information, please check our website or call **206-615-0827**. We can also send you a list of the more than 200 compounds we didn't find!

Water quality monitoring data can be difficult to interpret. To make all the information fit in one table, we used many acronyms that are defined below the table.

SEATTLE'S WATER COMES FROM 100,000 ACRES OF WILDERNESS WATERSHEDS IN THE CASCADES

A TASTE PANEL ENSURES GOOD TASTING WATER

OZONATION, FILTRATION, AND UV TREATMENT RESULT IN SAFE, HEALTHY DRINKING WATER

WE TEST THE WATER 365 DAYS PER YEAR

WE TEST FOR OVER 200 COMPOUNDS AND THIS IS ALL WE FOUND

		EPA'S ALLOWABLE LIMITS		LEVELS IN CEDAR WATER		LEVELS IN TOLT WATER		
DETECTED COMPOUNDS	UNITS	MCLG	MCL	AVERAGE	RANGE	AVERAGE	RANGE	TYPICAL SOURCES
RAW WATER								
Total Organic Carbon	ppm	NA	TT	0.7	0.3 to 1.2	1.3	1.2 to 1.6	Naturally present in the environment
Cryptosporidium*	#/100L	NA	NA	ND	ND	ND	ND to 2	Naturally present in the environment
FINISHED WATER								
Turbidity	NTU	NA	TT	0.4	0.2 to 2.9	0.06	0.04 to 0.15	Soil runoff
Barium	ppb	2000	2000	1.4	one sample	1.2	one sample	Erosion of natural deposits
Cadmium	ppb	5	5	ND	one sample	0.8	one sample	Erosion of natural deposits
Chromium**	ppb	100	100	0.2	one sample	0.2	one sample	Erosion of natural deposits
Fluoride	ppm	4	4	0.8	0.6 to 1.0	0.8	0.4 to 1.1	Water additive, which promotes strong teeth
Nitrate	ppm	10	10	0.09	one sample	0.11	one sample	Erosion of natural deposits
Total Trihalomethanes	ppb	NA	80	34	18 to 51	38	21 to 70	By-products of drinking water chlorination
Haloacetic Acids(5)	ppb	NA	60	23	8 to 44	27	18 to 37	
Chlorine	ppm	MRDLG = 4	MRDL = 4	Average = 0.89		Range = 0 to 1.9		Water additive used to control microbes

*Cryptosporidium was not detected in any samples from the Cedar. It was detected in one of four samples from the Tolt.
**The value reported reflects naturally occurring total chromium and not hexavalent chromium.

LEAD AND COPPER MONITORING RESULTS					
PARAMETER AND UNITS	MCLG	ACTION LEVEL+	2010 RESULTS++	HOMES EXCEEDING ACTION LEVEL	SOURCE
Lead, ppb	0	15	5	0 of 50	Corrosion of household plumbing systems
Copper, ppm	1.3	1.3	0.14	0 of 50	

+ The concentration of a contaminant which, if exceeded, triggers treatment or other requirements which a water system must follow.
++ 90th Percentile: i.e. 90 percent of the samples were less than the values shown.

Although there is no detectable lead in our source water, lead and other metals can leach into the water, primarily because of corrosion of household plumbing systems. It is very important that homeowners, business owners and others be aware of their type of plumbing, and how the plumbing affects their drinking water quality. Seattle Public Utilities treats the water to minimize the tendency for lead to enter the water, and results show that we have been very successful at this.

If present, elevated levels of lead can cause serious health problems, especially for pregnant women and young children. Lead in drinking water is primarily from materials and components associated with service lines and home plumbing. Seattle Public Utilities is responsible for providing high quality drinking water, but cannot control the variety of materials used in home plumbing components. When your water has been sitting for several hours, you can minimize the potential for lead exposure by flushing your tap for 30 seconds to 2 minutes before using water for drinking or cooking. If you are concerned about lead in your water, you may wish to have your water tested. Information on lead in drinking water, testing methods, and steps you can take to minimize exposure is available from the Safe Drinking Water Hotline (800-426-4791) or at **http://www.epa.gov/safewater/lead**.

DEFINITIONS

MCLG: Maximum Contaminant Level Goal—The level of a contaminant in drinking water below which there is no known or expected risk to health. MCLGs allow for a margin of safety.

MCL: Maximum Contaminant Level—The highest level of a contaminant that is allowed in drinking water. MCLs are set as close to the MCLGs as feasible using the best available treatment technology.

MRDL: Maximum Residual Disinfectant Level—The highest level of a disinfectant allowed in drinking water. There is convincing evidence that addition of a disinfectant is necessary for control of microbial contaminants.

MRDLG: Maximum Residual Disinfectant Level Goal—The level of a drinking water disinfectant below which there is no known or expected risk to health. MRDLGs do not reflect the benefits of the use of disinfectants to control microbial contaminants.

TT: Treatment Technique—A required process intended to reduce the level of a contaminant in drinking water.

NTU: Nephelometric Turbidity Unit—Turbidity is a measure of how clear the water looks. The turbidity MCL that applied to the Cedar supply in 2011 was 5 NTU, and for the Tolt it was 0.3 NTU for at least 95 percent of the samples in a month. 100 percent of the samples from the Tolt in 2011 were below 0.3 NTU.

NA: Not Applicable

ND: Not Detected

ppm: 1 part per million = 1 mg/L = 1 milligram per liter

ppb: 1 part per billion = 1 ug/L = 1 microgram per liter

1 ppm =1000 ppb

WANT TO LEARN MORE? VISIT WWW.SEATTLE.GOV/UTIL/WATERQUALITY
FOR CONSERVATION INFO., VISIT WWW.SAVINGWATER.ORG

Seattle Public Utilities

Seattle Public Utilities
700 Fifth Avenue, Suite 4900
P.O. Box 34018
Seattle, WA 98124-4018

PRESORTED
STANDARD
US POSTAGE PAID
SEATTLE, WA
PERMIT NO. 2129

Seattle water is clean, safe, and costs less than a penny a gallon.
For translation services please call 206-684-3000.

El agua de Seattle es limpia, segura y cuesta menos de un centavo el galón.
Para servicios de interpretación por favor llame al 206-684-3000.

Ang tubig sa Seattle ay malinis, ligtas, at naghahalaga ng wala pang isang sentimos ang bawat galon.
Para sa serbisyo ng tagapagpaliwanag, tumawag sa 206-684-3000.

Nguồn nước của Seattle sạch, an toàn và có giá chưa tới một xu một gallon.
Về dịch vụ phiên dịch xin gọi 206-684-3000.

씨애틀의 수돗물은 깨끗하고 안전하며 또한 저렴합니다.
통역 서비스를 원하시면 **206-684-3000**으로 전화하세요.

西雅圖的水乾淨、安全，每加侖成本不到一分錢。
如需要口譯服務，請撥電話號碼206-684-3000

Biyaha Seattle waa nadiif, waa amaan, qiimahana waa ka jaban yahay hal senti halkii galan.
Wixii turjubaan afka ah ku saabsan, Fadlan la soo xariir taleefoonka: 206-684-3000.

We're interested in your opinions! Take a quick survey at www.seattle.gov/util

This report cost $0.37 to produce and mail to you.
Printed on 30 percent post-consumer, 100 percent recycled paper using soy-based inks.
You're receiving this mailed report as part of a federal reporting requirement for municipal water systems.

Seattle Public Utilities

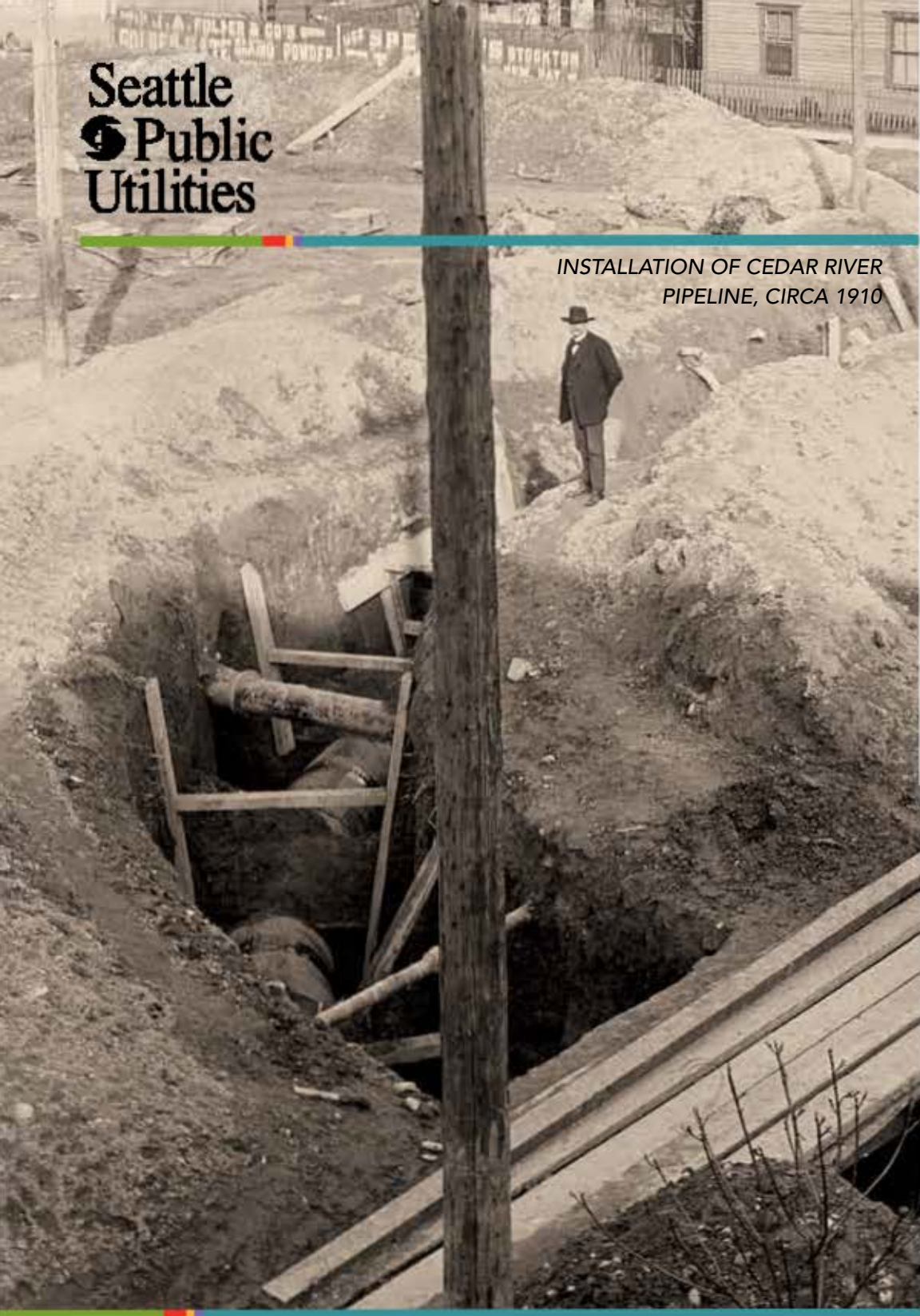

INSTALLATION OF CEDAR RIVER PIPELINE, CIRCA 1910

MORE THAN 100 YEARS OF WATER STEWARDSHIP

Seattle 2012 Drinking Water Quality Report

New underground Beacon Hill Reservoir during construction.

For over 100 years, we've benefited from wise water planning.

PURE WATER FROM FIRE AND GOLD

The great Seattle fire of 1889 burned more than 100 acres of downtown, a failure of the city's patchwork of private water systems. One month later, the citizens of Seattle overwhelmingly voted for a publicly owned system. Then, the Alaska gold rush of 1897 brought money into the city so that it could afford to build it. Here's what our visionary leaders did so we could have some of the best water in the country today:

- Chose a high-altitude source, which means gravity, instead of an expensive pumping system, brings us water.
- Chose water that comes from a protected wilderness, which means it has fewer contaminants and we can treat our water with fewer chemicals.

Our region benefits from these decisions made a century ago, with clean, abundant water. Seattle Public Utilities is committed to continuing this legacy.

A HEALTHY WATER SYSTEM

Here's what we're doing to ensure both water quality and quantity, today and tomorrow:

- Covering our reservoirs to improve drinking water quality and security, and provide public open space. This $145 million capital improvement program constructed five new underground reservoirs, which have been completed and are now back in service.
- Removing roads in the watershed and improving the health of the forest so there is less runoff, making the water clearer and requiring less treatment.
- Planning for climate change threats to our water, such as a decrease in snowfall.
- Continuing to encourage more efficient water use. Since 1990, the population served by Seattle Public Utilities has grown by 17 percent while total water consumption has declined by 29 percent. We are using 39 percent less water per person than we did in 1990.

This Drinking Water Quality report, which the Environmental Protection Agency requires us to create and share with every customer, gives you information about how we're doing regarding the water you drink every day. We're pleased to report that our water is among the best in the nation, both in purity and taste.

Landsburg Diversion Dam, first built in 1901.

Tolt water treatment facility.

What makes for water quality? It's in the infrastructure.

INVISIBLE YET INVALUABLE

Hidden from sight underground, and up in the mountains, are many parts of the water system that help make your water some of the best. Water quality is measured three ways: how good it tastes, how it smells, and how pure it is. We boast great quality in every measure, thanks to a water infrastructure that protects all three.

1 We have a great resource in the watershed that we protect and manage. We keep your watershed closed to human activity, allowing no development, and restoring and protecting habitat – our tree trimmers even use food grade oil in their chainsaws!

2 We provide the right level of treatment to keep it clean. Not too much chlorine, not too little. Pre-treating with ozone and ultraviolet light to improve taste and smell.

3 We store it in covered reservoirs and flush our 1,600 miles of water pipes as necessary.

4 We replace leaking pipes on a regular basis.

5 We test the water every day for contaminants. Then our specially trained tasting panel makes sure it meets their exacting standards.

CLEAN *AND* BOUNTIFUL *AND* INEXPENSIVE

While many cities scramble to find additional water sources, or fight with industry and agriculture over the supply, the Seattle region fares much better. Today, due to our two large mountain watersheds and our conservation efforts, we have water to meet our growth needs for the next 50 years.

It's also a great value. Compared with bottled water, which isn't subject to the same stringent quality standards, our water is 800 times less expensive. And the average Seattle Public Utilities customer's monthly water bill is comparable to average bills in other cities of similar size. High quality drinking water at a reasonable price is our promise to customers.

RELIABLE DELIVERY TO YOUR TAP

Seattle's more than 1,600 miles of distribution water mains are aging. Some drinking water pipes were installed in the ground nearly 100 years ago and have reached the end of their service life. Other water pipes are located in corrosive soils and must be replaced.

Through its water main rehabilitation program, Seattle Public Utilities is upgrading 4,600 linear feet of pipe with a non-metallic product that performs well in corrosive soils. Construction of this new piping system will begin in 2014 at five different sites in southeast Seattle.

SAVING WATER IS NOW SECOND NATURE

The communities served by Seattle Public Utilities and its 18 water district partners are enthusiastic about conserving, knowing that our quality of life is higher and our bills are lower when we use less. Because of water-efficient fixtures, new practices in landscaping, and business and residential conservation efforts, we've been able to reduce per-person water consumption by 14 percent in the past six years, from 92.2 to just 83.6 gallons per day.

In 2012 alone, we saved an estimated 780,000 gallons per day. That's enough water to supply 5,237 single-family homes. In the past six years, we have conserved an estimated 5.4 million gallons per day toward our 2012 goal of nearly 6 million gallons per day.

Over the last 20 years, Seattle Public Utilities has also reduced the amount of water it uses in operating the system. Out of the 44.1 billion gallons of treated drinking water produced in 2012, 3.0 billion gallons, or 6.8 percent, were lost to system leaks, meter inaccuracy, and non-metered uses. This loss rate is considered relatively low.

For the future, we've set a six-year conservation goal that's going to continue reducing per-person water use. Help us meet that goal, and save on your water bill at the same time, by continuing to find ways to use less.

Visit **www.savingwater.org** for more information on rebates, fix leaks videos, tips and free gardening classes.

WHAT DO CONSERVATION AND FISH HAVE TO DO WITH EACH OTHER?

Water conservation helps salmon, as well as your pocketbook. The foundation for healthy salmon populations is healthy habitat – including the quantity and quality of water in the waterways that support them. Your actions to conserve keep water in our rivers and protect this precious habitat for salmon and other species.

Help available for your utility bill

For people who need help with their water bills, Seattle Public Utilities offers assistance through its Utility Discount Program and conservation rebates.

For help with your water bill, call **206-684-0268** or go to **www.seattle.gov/mybill.**

To see if you are eligible for a free water-efficient toilet, call **206-448-5751** or go to **www.seattle.gov/util** and search "low income toilet."

Conservation: saving money, helping people and fish.

WATER ENOUGH FOR FISH, PEOPLE, AND OTHER LIVING THINGS

Your water conservation efforts help ensure that salmon and other wildlife have a healthy habitat.

Fish passage ladder.

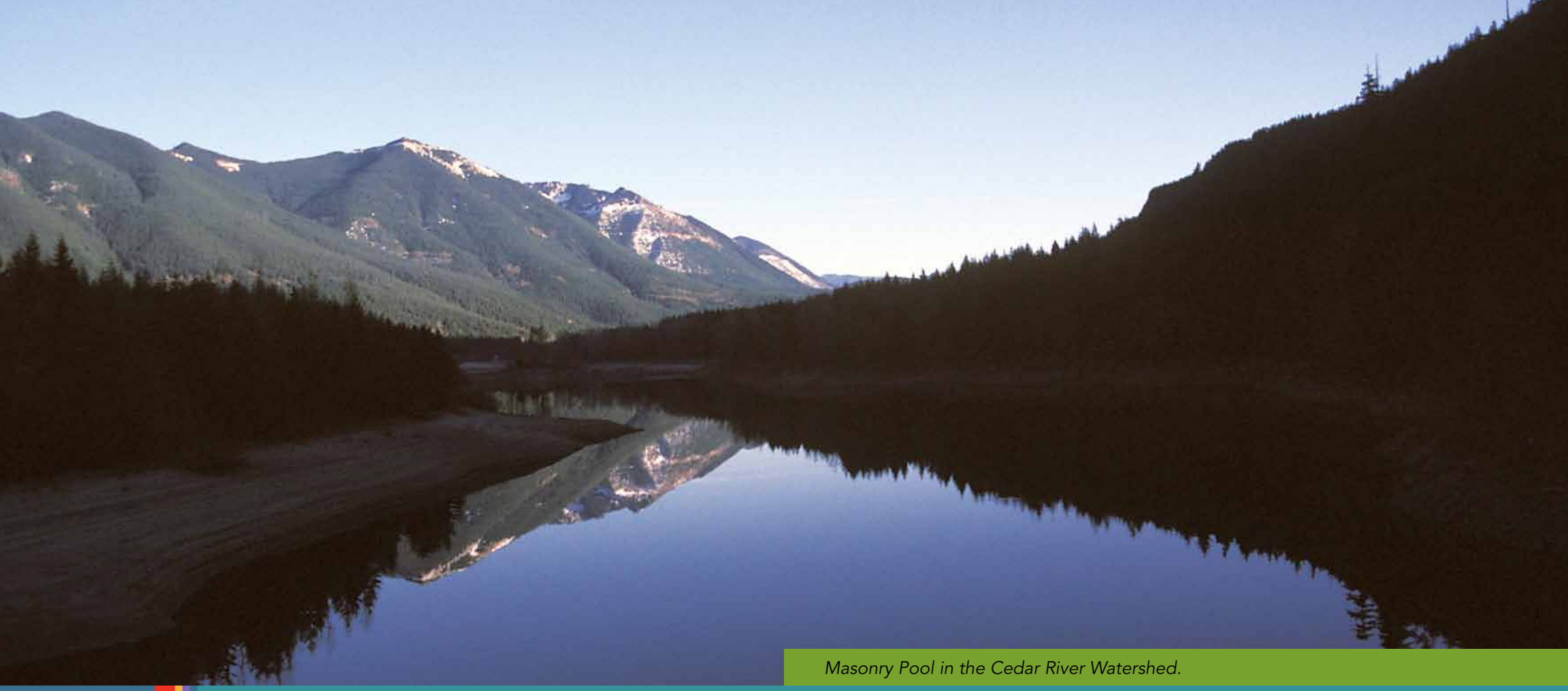

Masonry Pool in the Cedar River Watershed.

More information about your water.

THE DETAILS ABOUT OUR WATER SOURCES AND THEIR POTENTIAL CONTAMINANTS

Our region's water comes from two major sources: the Cedar River (60 percent) and the South Fork Tolt River (40 percent). These surface water sources begin in the Cascade Mountains and have very large protected watersheds. The system also uses wells, located in Burien, to meet peak summer demand. The wells provided less than 0.2 percent of the supply in 2012.

As water travels over the surface of the land or through the ground, it dissolves naturally occurring minerals and, in some cases, radioactive material, and can pick up substances resulting from the presence of animals or from human activity.

To ensure tap water is safe to drink, the Environmental Protection Agency and the Washington State Board of Health prescribe regulations that limit the amount of certain contaminants in water provided by public water systems.

All drinking water, including bottled water, contains at least small amounts of some contaminants, the presence of which does not necessarily indicate a health risk. More information about contaminants and potential health effects can be obtained by calling the Environmental Protection Agency's Safe Drinking Water Hotline at **800-426-4791.**

Washington's Source Water Assessment Program is conducted by the Department of Health (DOH) Office of Drinking Water. According to DOH, all surface waters in Washington are given a susceptibility rating of "high," regardless of whether contaminants have been detected or whether there are any sources of contaminants in the watershed. The Seattle wells have been given a susceptibility rating of "low" because of the type of aquifer, depth of well, and lack of contaminant detection. Information on the source water assessments is available from the DOH website at **https://fortress.wa.gov/doh/eh/dw/swap/maps.**

Since both watersheds are publicly owned, Seattle Public Utilities is able to prohibit agricultural, industrial, and recreational activities in the watersheds. Even so, there is always some potential for natural sources of contamination. In Seattle's surface water supplies, the potential sources of contamination include:

- microbial contaminants, such as viruses, bacteria, and protozoa from wildlife;
- inorganic contaminants, such as salts and metals, which are naturally occurring; and
- organic contaminants, which result from chlorine combining with the naturally occurring organic matter.

Some people may be more vulnerable to contaminants in drinking water than the general population. Immuno-compromised persons such as persons with cancer undergoing chemotherapy, persons who have undergone organ transplants, people with HIV/AIDS or other immune system disorders, some elderly, and infants can be particularly at risk from infections. These people should seek advice about drinking water from their health care providers. Environmental Protection Agency/Centers for Disease Control guidelines on appropriate means to lessen the risk of infection by cryptosporidium and other microbial contaminants are available from the Safe Drinking Water Hotline at **800-426-4791.**

Our results:

The results of monitoring in 2012 are shown in the table below. These results are for parameters regulated by the federal and state agencies. We tested for some 211 contaminants and didn't find any traces of 201 of those. For other water quality information, please check our web site at **www.seattle.gov/util/waterquality** or call **206-615-0827**. To make all the information fit in one table, we used many acronyms that are defined below. In Seattle, if you live south of Green Lake, your water probably comes from the Cedar River. Areas north of Green Lake usually receive Tolt water. Each source can provide water to other areas in Seattle, if needed.

		EPA'S ALLOWABLE LIMITS		LEVELS IN CEDAR WATER		LEVELS IN TOLT WATER		
DETECTED COMPOUNDS	UNITS	MCLG	MCL	AVERAGE	RANGE	AVERAGE	RANGE	TYPICAL SOURCES
RAW WATER								
Total Organic Carbon	ppm	NA	TT	0.7	0.4 to 1.1	1.2	1.1 to 1.4	Naturally present in the environment
Cryptosporidium*	#/100L	NA	NA	ND	ND	ND	ND	Naturally present in the environment
FINISHED WATER (after treatment)								
Turbidity (cloudiness)	NTU	NA	TT	0.3	0.2 to 2.3	0.06	0.04 to 0.38	Soil runoff
Barium	ppb	2000	2000	1.8	one sample	1.9	one sample	Erosion of natural deposits
Cadmium	ppb	5	5	ND	one sample	0.35	one sample	Erosion of natural deposits
Fluoride	ppm	4	4	0.8	0.7 to 0.9	0.8	0.7 to 0.9	Water additive, which promotes strong teeth
Nitrate	ppm	10	10	0.02	one sample	0.13	one sample	Erosion of natural deposits
Total Trihalomethanes	ppb	NA	80	38	16 to 56	40	19 to 57	By-products of drinking water chlorination
Haloacetic Acids(5)	ppb	NA	60	44	12 to 72	38	22 to 55	
Chlorine	ppm	MRDLG = 4	MRDL = 4	Average = 0.89		Range = 0 to 1.7		Water additive used to control microbes
Coliform, Total	%	0	5%	Highest Month = 0.9%				Naturally present in the environment

*Cryptosporidium was not detected in any samples from the Cedar or Tolt (3 samples each supply).

LEAD AND COPPER MONITORING RESULTS

PARAMETER AND UNITS	MCLG	ACTION LEVEL+	2010 RESULTS++	HOMES EXCEEDING ACTION LEVEL	SOURCE
Lead, ppb	0	15	5	0 of 50	Corrosion of household plumbing systems
Copper, ppm	1.3	1.3	0.14	0 of 50	

+ The concentration of a contaminant which, if exceeded, triggers treatment or other requirements which a water system must follow.
++ 90th Percentile: i.e. 90 percent of the samples were less than the values shown.

Although there is no detectable lead in our source water, tests show there are sometimes elevated levels of lead and copper, primarily because of corrosion of household plumbing systems. These results show that it is very important that homeowners, business owners and others be aware of their type of plumbing, and how the plumbing affects their drinking water quality.

If present, elevated levels of lead can cause serious health problems, especially for pregnant women and young children. Lead in drinking water is primarily from materials and components associated with service lines and home plumbing. Seattle Public Utilities is responsible for providing high quality drinking water, but cannot control the variety of materials used in plumbing components.

Where you live, when your plumbing was installed and what type of plumbing you have, all play a part in determining your potential exposure level. SPU treats the water to minimize the tendency for lead to enter the water, and results show that we have been very successful at this. You can minimize the potential for lead exposure by flushing your tap for 30 seconds to 2 minutes before using water for drinking or cooking.

If you are concerned about lead in your water, you may wish to have your water tested. Information on lead in drinking water, testing methods, and steps you can take to minimize exposure is available from the Safe Drinking Water Hotline or at **www.epa.gov/safewater/lead.**

DEFINITIONS

MCLG: *Maximum Contaminant Level Goal*—The level of a contaminant in drinking water below which there is no known or expected risk to health. MCLGs allow for a margin of safety.

MCL: *Maximum Contaminant Level*—The highest level of a contaminant that is allowed in drinking water. MCLs are set as close to the MCLGs as feasible using the best available treatment technology.

MRDL: *Maximum Residual Disinfectant Level*—The highest level of a disinfectant allowed in drinking water. There is convincing evidence that addition of a disinfectant is necessary for control of microbial contaminants.

MRDLG: *Maximum Residual Disinfectant Level Goal*—The level of a drinking water disinfectant below which there is no known or expected risk to health. MRDLGs do not reflect the benefits of the use of disinfectants to control microbial contaminants.

TT: *Treatment Technique*—A required process intended to reduce the level of a contaminant in drinking water.

NTU: *Nephelometric Turbidity Unit*—Turbidity is a measure of how clear the water looks. The turbidity MCL that applied to the Cedar supply in 2011 was 5 NTU, and for the Tolt it was 0.3 NTU for at least 95 percent of the samples in a month. 100 percent of the samples from the Tolt in 2011 were below 0.3 NTU.

NA: Not Applicable

ND: Not Detected

ppm: 1 part per million = 1 mg/L = 1 milligram per liter

ppb: 1 part per billion = 1 ug/L = 1 microgram per liter

1 ppm =1000 ppb

For more information about your water, contact Seattle Public Utilities at **206-684-3000** or visit our website at **www.seattle.gov/util/waterqualityreport.** For conservation information, *visit* **www.savingwater.org.**

Seattle Public Utilities

Seattle Public Utilities
700 Fifth Avenue, Suite 4900
P.O. Box 34018
Seattle, WA 98124-4018

PRESORTED
STANDARD
US POSTAGE PAID
SEATTLE, WA
PERMIT NO. 6000

Seattle water is clean, safe, and costs less than a penny a gallon.
For translation services please call 206-684-3000.

El agua de Seattle es limpia, segura y cuesta menos de un centavo el galón.
Para servicios de interpretación por favor llame al 206-684-3000.

Ang tubig sa Seattle ay malinis, ligtas, at naghahalaga ng wala pang isang sentimos ang bawat galon.
Para sa serbisyo ng tagapagpaliwanag, tumawag sa 206-684-3000.

Nguồn nước của Seattle sạch, an toàn và có giá chưa tới một xu một gallon.
Về dịch vụ phiên dịch xin gọi 206-684-3000.

씨애틀의 수돗물은 깨끗하고 안전하며 또한 저렴합니다.
통역 서비스를 원하시면 **206-684-3000**으로 전화하세요.

西雅圖的水乾淨、安全，每加侖成本不到一分錢。
如需要口譯服務，請撥電話號碼206-684-3000

Biyaha Seattle waa nadiif, waa amaan, qiimahana waa ka jaban yahay hal senti halkii galan.
Wixii turjubaan afka ah ku saabsan, Fadlan la soo xariir taleefoonka: 206-684-3000.

This report cost $0.38 to produce and mail to you.
Printed on 30 percent post-consumer, 100 percent recycled paper using soy-based inks.
You're receiving this mailed report as part of a federal reporting requirement for municipal water systems.

Seattle Public Utilities

DRINKING WATER QUALITY REPORT 2013

INVISIBLE SYSTEMS, VISIBLE BENEFITS

Beacon Hill Reservoir lies beneath Jefferson Park — creating more open space for Seattle.

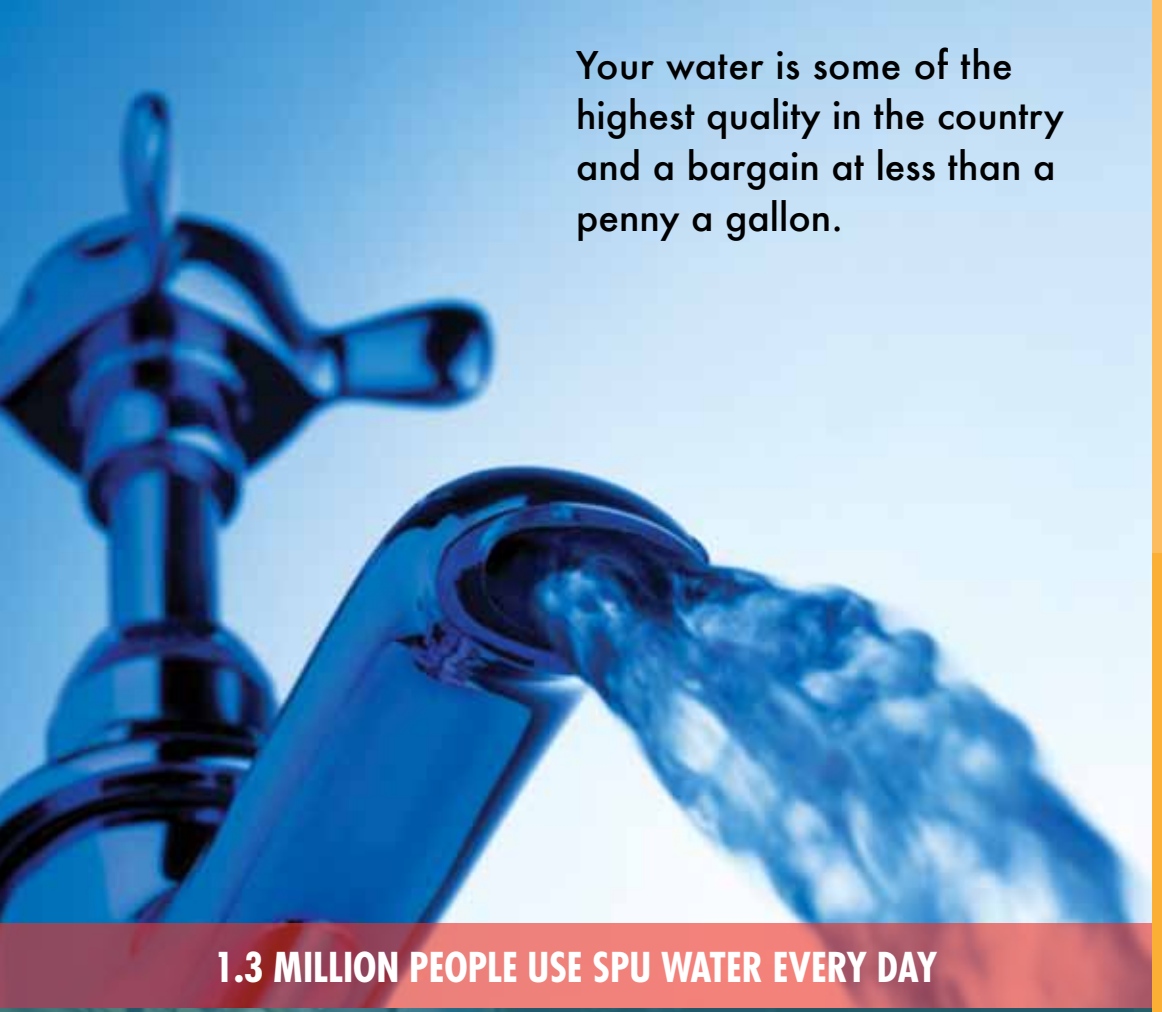

Your water is some of the highest quality in the country and a bargain at less than a penny a gallon.

1.3 MILLION PEOPLE USE SPU WATER EVERY DAY

PIPES, PUMPS, TREATMENT PLANTS, AND PEOPLE MAKE THIS POSSIBLE

Tony Blackwell
Division Director for Water Transmission and Distribution

"I like the fact that SPU owns and maintains both of its watersheds. It makes me proud that we have control of the quality of our water from our watersheds to your faucet."

OUR HIDDEN WATER SYSTEM

Infrastructure. It may sound boring, but take a deeper look. You'll find the amazing role Seattle Public Utilities' pipes, pumps and treatment plants play to bring some of the best water in the world to your tap.

- It starts with the watersheds—over 100,000 protected acres—that provide some of the cleanest water. We're the envy of the nation, with such a safe and reliable source of mountain water. These watersheds also provide habitat for our salmon and other animals and plants.
- Water travels to two plants that treat and test the water to ensure it is safe. Because of the purity of the source water, we do much less treatment than other cities.
- It travels through 1,800 miles of water mains. We schedule regular preventative maintenance to prevent leaks and breaks.
- It is monitored 24 hours a day, seven days a week, by people responding to breaks, power outages, pumping station issues and coordinating with street and electricity construction projects.
- It is stored in covered reservoirs in the city, protected from contamination.
- It's there—tasty, clean and safe—when you turn on the tap.

It takes 658 people, and lots of equipment, to bring you what you have come to expect: the best water in the nation, for less than a penny a gallon.

1,800 MILES OF PIPES, 20,000 VALVES, 188,000 WATER METERS

THE COMPLEX BUSINESS OF GETTING CLEAN WATER TO YOUR HOME

Seattle Public Utilities' two watersheds, two state-of-the-art water treatment plants, 1,800 miles of pipes, thirteen reservoirs, ten storage tanks, many pumping stations, and a mission control center all work together to supply our region with fresh, clean water.

Cheryl Capron
Senior Water Systems Operator

"I monitor the system, analyze operations data, reroute water if there's a main break. If a transportation project is planned, I figure out what needs to be shut down, and find alternative supply routes so no one goes without water. I make sure water flows!"

A WORLD OF WATER BELOW

The water beneath our feet is necessary for life, yet few of us think about the amazing system that delivers it to our taps.

Water treatment alone is a complex endeavor: Cedar River water is disinfected with ozone, ultraviolet light, and chlorine. South Fork Tolt water, which is slightly different, is ozonated, filtered, and disinfected with chlorine. Both supplies have minerals added for corrosion control. Then, our water is ready to drink.

PREVENTING WATER WASTE

Seattle Public Utilities (SPU) produced 44.1 billion gallons of treated drinking water in 2013. Of this amount, 2.8 billion gallons were lost to leakage; representing a leakage rate of 6.3 percent, which is considered relatively low.

Preventing leaks is one way water is conserved; your efforts are another. Why is conservation so important in our region? It gives customers ways to lower their utility bills. It helps make the water system more reliable by reducing waste and leaving water available for when it's needed most. And, conserving water means that we'll have enough water for ourselves, wildlife, and future generations.

The Saving Water Partnership (SWP) — which is made up of SPU and 18 of its wholesale water utility partners—has set a six-year conservation goal: reduce per capita use from current levels so that the SWP's total average annual retail water use is less than 105 mgd (million gallons per day) from 2013 through 2018 despite forecasted population growth. In order to meet the goal, the amount of water used per person will need to decrease to offset growth. For 2013, the Saving Water Partnership met the goal, using 93 mgd.

Visit **www.savingwater.org** for information on rebates, conservation tips, videos on fixing leaks and efficient landscaping practices, and more.

We get ongoing benefit from Seattle's early decision in the 1890s to protect the watershed and provide a gravity-fed clean mountain source of water for our region.

MORE THAN 100,000 ACRES OF PROTECTED WATERSHED

A KEY PART OF THE INVISIBLE SYSTEM

Ralph Naess
Public and Cultural Programs Manager

"It's a huge 'aha!' moment when people come up to our Cedar River Watershed Education Center. They see the mountains, and the lake and streams and waterfalls and ask in amazement, 'Is that my drinking water?' It's a beautiful thing: water with spirit."

THE WATERSHED AND ITS WATER: TWO GREAT RESOURCES

Two surface water sources provide our water: 60 percent from the Cedar River and 40 percent from the South Fork Tolt River. These two surface water sources begin in the Cascade Mountains. (The system also has wells that weren't needed in 2013.)

Since both watersheds are publicly owned, Seattle Public Utilities makes sure that the land and water is free of agricultural, industrial, residential and recreational use. This means that contaminants have little opportunity to enter the water, making our water some of the best in the nation, and requiring less treatment than most other cities.

More than forty people, including biologists and hydrologists, education staff, watershed inspectors, and maintenance people work to protect the watersheds. Watershed maintenance includes decommissioning roads to reduce run-off, improving culvert systems, and taking care of the forest, plants, fish and wildlife.

COME SEE THE WATERSHED

While the watershed is closed to public access, the Cedar River Watershed Education Center on Rattlesnake Lake in North Bend provides guided tours, exhibits and events to connect people to the source of Seattle's drinking water and its unique cultural and natural history. School field trips, educational events, volunteer opportunities and family programs bring the history, science and culture of the watershed alive. Come visit! Learn more at **www.seattle.gov/util/crwec**.

THE DETAILS ABOUT OUR WATER SOURCES AND THEIR POTENTIAL CONTAMINANTS

To ensure tap water is safe to drink, the Environmental Protection Agency and the Washington State Board of Health regulate the amount of certain contaminants in water provided by public water systems. The U.S. Food and Drug Administration and the Washington State Department of Agriculture regulations establish limits for contaminants in bottled water that must provide the same protection for public health.

Washington's Source Water Assessment Program is conducted by the Department of Health (DOH) Office of Drinking Water. According to DOH, all surface waters are given a susceptibility rating of "high," regardless of whether contaminants have been detected or whether there are any sources of contaminants in the watershed. Information on the source water assessments is available from the DOH website at **https://fortress.wa.gov/doh/eh/dw/swap/maps**.

Sources of drinking water (both tap water and bottled water) include rivers, lakes, streams, ponds, reservoirs, springs, and wells. As water travels over the surface of the land or through the ground, it dissolves naturally occurring minerals and, in some cases, radioactive material, and can pick up substances resulting from the presence of animals or from human activity.

Drinking water, including bottled water, may reasonably be expected to contain at least small amounts of some contaminants. The presence of contaminants does not necessarily indicate that water poses a health risk.

More information about contaminants and potential health effects can be obtained by calling the Environmental Protection Agency's Safe Drinking Water Hotline at **800-426-4791**.

In Seattle's surface water supplies, the potential sources of contamination include:

- microbial contaminants, such as viruses, bacteria, and protozoa from wildlife;
- inorganic contaminants, such as salts and metals, which are naturally occurring; and
- organic contaminants, which result from chlorine combining with the naturally occurring organic matter.

Some people may be more vulnerable to contaminants in drinking water than the general population. Immunocompromised persons such as persons with cancer undergoing chemotherapy, persons who have undergone organ transplants, people with HIV/AIDS or other immune system disorders, some elderly, and infants can be particularly at risk from infections. These people should seek advice about drinking water from their health care providers. Environmental Protection Agency/Centers for Disease Control guidelines on appropriate means to lessen the risk of infection by Cryptosporidium and other microbial contaminants are available from the Safe Drinking Water Hotline at **800-426-4791**.

Winsome Robinson Williams
Water Quality Analyst, Supervisor

"The best part of my job is letting people know that our water is amazing."

Ryane Mar, *an engineer for water-related Improvement Projects, with* **Daniel Huang**, *an engineer with the Dam Safety Program.*

A lot of work goes into maintaining the region's water supply. There are multiple types and ages of water mains, Seattle's geography is challenging with lakes and hills, and the number of federal and state regulations that SPU has to meet is substantial.

Alex Chen
Senior Water Quality Engineer

"I see myself as an advocate for our customers. Together with other water quality engineers, I ensure that our water protects public health, meets requirements, and tastes and smells great."

OUR RESULTS:

The results of monitoring in 2013 are shown in the table below. These results are for parameters regulated by the federal and state agencies. For other water quality information, please check our web site at **www.seattle.gov/util/waterqualityreport** or call **206-615-0827**. We can also send you a list of the more than 200 compounds for which we tested but did not find in our surface water supplies, including unregulated contaminants.

Water quality monitoring data can be difficult to interpret. To make all the information fit in one table, we used many acronyms that are defined below the table. In Seattle, if you live south of Green Lake, your water probably comes from the Cedar. Areas north of Green Lake usually receive Tolt water. Each source can provide water to other areas in Seattle if needed.

		EPA'S ALLOWABLE LIMITS		LEVELS IN CEDAR WATER		LEVELS IN TOLT WATER		
DETECTED COMPOUNDS	UNITS	MCLG	MCL	AVERAGE	RANGE	AVERAGE	RANGE	TYPICAL SOURCES
RAW WATER								
Total Organic Carbon	ppm	NA	TT	0.8	0.4 to 1.4	1.3	1.2 to 1.4	Naturally present in the environment
Cryptosporidium*	#/100L	NA	NA	ND	ND	<1	ND - 2	Naturally present in the environment
FINISHED WATER								
Turbidity (cloudiness)	NTU	NA	TT	0.4	0.2 to 2.7	0.06	0.04 to 0.14	Soil runoff
Barium	ppb	2000	2000	1.8	one sample	1.9	one sample	Erosion of natural deposits
Bromate	ppb	0	10	0.08	ND - 2	ND	ND	By-product of drinking water disinfection
Fluoride	ppm	4	4	0.8	0.7 to 0.8	0.8	0.7 to 0.9	Water additive that promotes strong teeth
Coliform, Total	%	0	5	Highest Month=0.5% Annual Average=0.15%		Highest Month=0.5% Annual Average=0.15%		Naturally present in the environment
Total Trihalomethanes	ppb	NA	80	34	14 to 44	29	19 to 41	By-products of drinking water chlorination
Haloacetic Acids(5)	ppb	NA	60	41	12 to 65	37	23 to 48	
Chlorine	ppm	MRDLG = 4	MRDL = 4	Average = 0.85 Range = 0 to 1.7		Average = 0.85 Range = 0 to 1.7		Water additive used to control microbes

*Cryptosporidium was not detected in any samples from the Cedar (out of 3) and in one sample from the Tolt (out of 4).

LEAD AND COPPER MONITORING RESULTS					
PARAMETER AND UNITS	MCLG	ACTION LEVEL+	2013 RESULTS++	HOMES EXCEEDING ACTION LEVEL	SOURCE
Lead, ppb	0	15	3	0 of 50	Corrosion of household plumbing systems
Copper, ppm	1.3	1.3	0.10	0 of 50	

+ The concentration of a contaminant which, if exceeded, triggers treatment or other requirements which a water system must follow.
++ 90th Percentile: i.e. 90 percent of the samples were less than the values shown.

Although there is no detectable lead in our source water, tests show there are sometimes elevated levels of lead and copper in some samples, primarily because of corrosion of household plumbing systems. These results show that it is very important that homeowners, business owners and others be aware of their type of plumbing, and how the plumbing affects their drinking water quality.

The majority of homes have some risk of lead contamination in water that sits in pipes for longer than two hours. Where you live, when your plumbing was installed and what type of plumbing you have, all play a part in determining your potential exposure level. SPU treats the water to minimize the tendency for lead to enter the water, and results show that that we have been very successful at this.

If present, elevated levels of lead can cause serious health problems, especially for pregnant women and young children. Lead in drinking water is primarily from materials and components associated with service lines and home plumbing. SPU is responsible for providing high quality drinking water, but cannot control the variety of materials used in plumbing components. When your water has been sitting for several hours, you can minimize the potential for lead exposure by flushing your tap for 30 seconds to 2 minutes before using water for drinking or cooking. If you are concerned about lead in your water, you may wish to have your water tested. Information on lead in drinking water, testing methods, and steps you can take to minimize exposure is available from the Safe Drinking Water Hotline or at **http://www.epa.gov/safewater/lead**.

Finally, remember that drinking water is only a minor contributor to overall exposure to lead. Other sources, including paint, soil, and food, also contribute.

DEFINITIONS

MCLG: *Maximum Contaminant Level Goal*—The level of a contaminant in drinking water below which there is no known or expected risk to health. MCLGs allow for a margin of safety.

MCL: *Maximum Contaminant Level*—The highest level of a contaminant that is allowed in drinking water. MCLs are set as close to the MCLGs as feasible using the best available treatment technology.

MRDL: *Maximum Residual Disinfectant Level*—The highest level of a disinfectant allowed in drinking water. There is convincing evidence that addition of a disinfectant is necessary for control of microbial contaminants.

MRDLG: *Maximum Residual Disinfectant Level Goal*—The level of a drinking water disinfectant below which there is no known or expected risk to health. MRDLGs do not reflect the benefits of the use of disinfectants to control microbial contaminants.

TT: *Treatment Technique*—A required process intended to reduce the level of a contaminant in drinking water.

NTU: *Nephelometric Turbidity Unit*—Turbidity is a measure of how clear the water looks. The turbidity MCL that applied to the Cedar supply in 2013 was 5 NTU, and for the Tolt it was 0.3 NTU for at least 95 percent of the samples in a month. 100 percent of the samples from the Tolt in 2013 were below 0.3 NTU.

NA: *Not Applicable*

ND: *Not Detected*

ppm: *1 part per million* = 1 mg/L = 1 milligram per liter

ppb: *1 part per billion* = 1 ug/L = 1 microgram per liter

1 ppm =1000 ppb

For more information about your water, contact Seattle Public Utilities at **206-684-3000** or visit our website at **www.seattle.gov/util/waterqualityreport**.
For conservation information, visit **www.savingwater.org**.

Seattle Public Utilities

Seattle Public Utilities
700 Fifth Avenue, Suite 4900
P.O. Box 34018
Seattle, WA 98124-4018

PRESORTED
STANDARD
US POSTAGE PAID
SEATTLE, WA
PERMIT NO. 6000

Seattle water is clean, safe, and costs less than a penny a gallon.
For translation services please call 206-684-3000.

El agua de Seattle es limpia, segura y cuesta menos de un centavo el galón.
Para servicios de interpretación por favor llame al 206-684-3000.

Ang tubig sa Seattle ay malinis, ligtas, at naghahalaga ng wala pang isang sentimos ang bawat galon.
Para sa serbisyo ng tagapagpaliwanag, tumawag sa 206-684-3000.

Nguồn nước của Seattle sạch, an toàn và có giá chưa tới một xu một gallon.
Về dịch vụ phiên dịch xin gọi 206-684-3000.

씨애틀의 수돗물은 깨끗하고 안전하며 또한 저렴합니다.
통역 서비스를 원하시면 **206-684-3000**으로 전화하세요.

西雅圖的水乾淨、安全，每加侖成本不到一分錢。
如需要口譯服務，請撥電話號碼206-684-3000

Biyaha Seattle waa nadiif, waa amaan, qiimahana waa ka jaban yahay hal senti halkii galan.
Wixii turjubaan afka ah ku saabsan, Fadlan la soo xariir taleefoonka: 206-684-3000.

You're receiving this report as part of a federal requirement for municipal water systems. This report costs about 29 cents to produce and mail to you.
Printed on 30 percent post-consumer, 100 percent recycled paper using soy-based inks.

APPENDIX W

Sanitary Survey and Response

STATE OF WASHINGTON
DEPARTMENT OF HEALTH
20435 72nd Ave. S. , Suite 200, K17-12• Kent, Washington 98032 -2358

August 31, 2009

GREG NEUMANN WATER DIVISION MANAGER
Kirkland Water System
123 5TH AVENUE
KIRKLAND WA 98033

Subject: Kirkland Water System (ID#42250T)
King County
Routine 2009 Sanitary Survey

Dear Mr. Neumann:

This letter is in follow up to my inspection of the Kirkland Water System on August 20, 2009. My inspection was part of the Department's routine sanitary survey program. The purpose of this program is to inspect water system facilities and their O & M programs to ensure compliance with drinking water regulations and to help ensure that safe and reliable water is delivered to users. I appreciate the time spent by you, Van, and Steve showing me the water system. A copy of my inspection summary is enclosed, please check it for accuracy. All of the items listed in the recommendation section of the summary should be completed by the water system.

The Drinking Water Regulations require that all Group A public water systems have a sanitary survey every 5 years. In order to receive credit for the survey, a sanitary survey fee must be paid. Enclosed is an invoice for $367.00. Please remit your complete payment in the form of a check or money order within thirty days of the date of this letter to: **DOH, Revenue Section, P.O. Box 1099, Olympia, WA 98507-1099**.

Once again thank you for your time if you have any questions please call me in Kent at (253) 395-6767.

Sincerely,

Stephen Deem, PE
Regional Engineer
NW Drinking Water Operations

Enclosures

Cc: Sanitary Survey File
Seattle-King Public Health

STATE OF WASHINGTON
DEPARTMENT OF HEALTH
20435 72nd Ave. S. , Suite 200, K17-12• Kent, Washington 98032 -2358

MEETING SUMMARY/SYSTEM INSPECTION

August 20, 2009

System:	Kirkland Water system King County ID# 42250T
Persons Attending:	Greg Neumann, Water Division Manager Van Ingram-Lock, Management Analyst Steve Ensminger, Water System Lead Steve Deem, DOH SD
Purpose:	Routine Sanitary Survey

System Summary & Findings:

General:

The system was last surveyed in November of 2004. Significant findings from the 2004 survey include: 1) Improve reservoir sanitary improvements including screens and hatches; 2) Submit as-built construction documents for the 650 pump station. There are no complaints on file since the last survey. The Kirkland Water System is operating with a green permit and has an unrestricted connection limit.

The Kirkland water system serves the majority of the City of Kirkland. The Kirkland water system is located in King County on the eastern shore of Lake Washington. The water system is bordered on the south by the City of Bellevue, bordered on the east by the City of Redmond, and to the north by the Northshore Utility District. The service area covers approximately 9 square miles. The water system has approximately 11,500 service connections serving a population of almost 30,000 people. A large portion of the eastern part of the service area used to be served by the Rose Hill Water District. In 1994 Kirkland, Redmond, and Bellevue assumed control over the Rose Hill Water District and divided up the Rose Hill service area. This division of the Rose Hill district resulted in some shared facilities and some unique ownership operation along the eastern boundary of the Kirkland water system. Both storage reservoirs are jointly owned but maintained and operated by Kirkland. Some customer accounts in Redmond actually obtain their water from Kirkland pipes.

Kirkland receives all of its water from Seattle Public Utilities. This part of the Seattle Regional system receives water from the Tolt supply. There are three supply stations. The three supply points are labeled supply station 1, 2, and 3 with supply station 3 being the northern most supply station. Normally Tolt pipeline pressure is high enough to supply all of Kirkland without repumping. Refer to the City's 2006 water system plan figure 2-1 for a system schematic.

The water system operates two reservoirs: the north reservoir is 14 million gallons and the south reservoir is 11 million gallons. The 650 zone pump station is located adjacent to the south reservoir. The south reservoir over flow is at 545 feet and sets the hydraulic grade line in the 545 zone. Normally system pressures from the Tolt supply line are sufficient to supply the 650 zone for Kirkland. Only when Tolt line pressures are too low does the 650 zone booster pumps need to operate. Kirkland operates eight pressure zones all of which are supplied through pressure reducing valves (PRV's). City has pro-active maintenance programs for its PRV stations and conducts this in house. System also has a pro- active line valve, fire hydrant exercise, and repair program. On odd years all fire hydrants are operated and serviced; on even years all main line valves are exercised and serviced. Staff visit all supply stations on a weekly basis. The north reservoir is scheduled to come out of service later this year for a seismic upgrade and interior and exterior painting.

Kirkland does not provide any additional treatment to the Tolt supply. The Tolt supply originates from the South Fork Tolt watershed which is a closed watershed in the Cascade Range. The tolt treatment facility employs ozonation, filtration, corrosion control, fluoridation, and chlorination as treatment.

Kirkland staff do not conduct any water quality monitoring. Staff are not proficient with chlorine residual test kits and in fact do not appear to have any available kits. Staff are unfamiliar with chlorine residuals through out the system. Their only input comes from the six sample stations and chlorine residuals taken during coliform monitoring by SPU regional monitoring operations.

Water Quality Monitoring:

Kirkland obtains all of its water from Seattle Public Utilities Tolt filtration supply it does not provide any additional treatment.

Coliform Bacteria:

The system participates in the Seattle regional coliform monitoring program. Greg and Steve report that they are aware of repeat sample site locations and that they plan to dismantle service meters to collect repeat samples if needed. They are not aware of the requirement to monitor free chlorine residual at the time of repeat sampling, as the city

does not have distribution chlorine residual test kits. System should identify repeat sites. Generally meter collection boxes are not an optimum repeat collection location. (Staff are very hesitant to use customer services as repeat sites). In light of resent E-coli response from other wholesale customers Kirkland staff should conduct practice sessions to maintain or develop proficiency in proper coliform sampling collection, and in required steps for repeat collection, lab transportation, and possible public notification.

Lead and Copper:

The system is part of the Seattle regional lead and copper monitoring program. Kirkland is in the Tolt Wholesale sub-group. The Tolt subgroup has qualified for reduced monitoring based on 2007 and 2008 distribution lead and copper results.

Disinfection by Products (DBP):

Kirkland does not re-chlorinate SPU water and is not directly regulated under the stage 1 DBP rule. SPU does conduct regional monitoring. Results to date indicate very low TTHM and HAA5 levels in the Kirkland distribution system. Kirkland staff reports that Seattle is working with Kirkland in preparation for stage 2 DBP rule implementation.

Disinfection Residual Monitoring:

Kirkland does not measure any distribution residual in their distribution system directly. Greg and Steve report they do not have chlorine residual test kits. Their knowledge of distribution residuals comes solely from the SPU regional monitoring coliform at six sites. During the survey we were able to measure chlorine residual in the 395 zone per my request by using a chlorine residual test kit given to the city by SPU to conduct DPB 2 monitoring. The free chlorine residual was 0.5 mg/L

Operations and Maintenance:

Water System Plan:

Water system is in compliance with water system planning. Water system plan was approved in October 2006 the next plan is due in August 2013.

Operations / Maintenance

The water system does have telemetry monitoring. Service meters are read by Kirkland staff. Residential meters are read every other month. One staff is dedicated solely to locate utility activities. Water system billing is conducted by city staff. The water system runs a very aggressive preventative maintenance program relative to their PRV's as well as water main replacement. Water system storage tanks, however, are not routinely visited

this is a significant weakness especially relative to increased concerns over water system vulnerability. Water system storage tanks should be visited quarterly and all screens, vents, and etc. checked.

Greg Neumann reports that City of Kirkland and labor union agreements do not allow Greg to directly operate or maintain any part of the water system, nor collect water quality samples under normal system operation. Greg is the operator of record for purposes of WAC compliance.

Cross Connection Control Program:

The system is implementing a full cross connection control program. Water system staff is aware and appear to be aware of change of use issues relative to cross connection control and appear to be working closely with the city building department staff to stay on top of this issue.

Recommendations and Findings:

1. Recent E-coli occurrences in other SPU wholesale customers has highlighted the need for all wholesale staff to be proficient and knowledgeable regarding collecting repeat coliform samples in the event that Kirkland has a positive sample. Kirkland should re-evaluate its coliform repeat sites to insure that they are still appropriate sampling sites. Please refer to the enclosed brochure relative to coliform sampling sites and sample collection protocol. Department of Health recommends that Kirkland staff collect repeat coliform samples from the repeat sites as a practice exercise. These samples should be marked as engineering samples and would not count relative to routine compliance. This exercise allows staff to practice their sampling skills and to evaluate sampling procedures. This should also include an evaluation of the timing necessary to obtain sample bottles and to transport samples to the lab.

2. During the inspection staff reported that the utility does not have chlorine residual test kits as standard equipment for water system staff. Chlorine residual is a very important indicator of water quality. Chlorine residual should be monitored as part of distribution system repair work, customer complaint response, and in the event of an emergency to help determine water quality. In addition, coliform regulations require that the chlorine residual be accurately measured at the time of repeat sample collections. Please refer to comment No. 1 above. All Kirkland staff should have chlorine residual tests and be proficient in their use. Strongly encourage the district to monitor chlorine residual throughout the distribution system in order to build a better understanding of chlorine residual levels and to not be solely dependent upon SPU regional monitoring data.

3. Intrusion alarms should be installed on both of the storage tank hatches. In the absence of daily visits to the storage tank hatches intrusion alarms, while not preventing an actual intrusion, will allow a timely response by law enforcement and district water system staff. This level of security is considered a minimum level of security for this type of critical public health infrastructure. Upcoming plans for taking the North Reservoir out of service would be a perfect time to install intrusion alarms on the North Reservoir.

4. The overflow screens on the North Reservoir should be repaired as soon as possible.

5. The North Reservoir overflow appears to be undersized for influent flows associated with this reservoir. Undersized overflows can lead to structural damage in the event of an uncontrolled overflow. The overflow sizing should be revisited by engineering staff and upgraded as appropriate as part of the North Reservoir rehab project.

6. District staff report that storage tank sanitary components are now not routinely checked. Department of Health recommends that storage tanks be inspected at least quarterly. These quarterly visits should ensure that all vents, overflow screening, and hatches are intact and secure.

DOH Follow up:

1. Complete summary, photos were taken.
2. Send follow up letter, include proper coliform sampling.
3. Refer to Operator Certification.

Kim Kuzak

From: Greg Neumann <GNeumann@kirklandwa.gov>
Sent: Thursday, August 21, 2014 10:08 AM
To: Kim Kuzak
Cc: Michele Campbell
Subject: FW: Response to Kirkland's Sanitary Survey

Kim, this was my response and Steve Deem's response to me.

Greg

From: Deem, Stephen (DOH) [mailto:Steve.Deem@DOH.WA.GOV]
Sent: Tuesday, September 22, 2009 7:46 AM
To: Greg Neumann
Cc: Pell, Derek (DOH); Steve Ensminger; Daryl Grigsby; Vandana Ingram-Lock; Ray Steiger
Subject: RE: Response to Kirkland's Sanitary Survey

Dear Mr. Neumann:

Thank you for the timely response. A hard copy of your email has been filed in our office's correspondence file for the Kirkland Water System.

Steve Deem

From: Greg Neumann [mailto:GNeumann@ci.kirkland.wa.us]
Sent: Monday, September 21, 2009 2:51 PM
To: Deem, Stephen (DOH)
Cc: Pell, Derek (DOH); Steve Ensminger; Daryl Grigsby; Vandana Ingram-Lock; Ray Steiger
Subject: Response to Kirkland's Sanitary Survey

Mr. Deem,

After reviewing your comments associated with the Sanitary Survey that you performed for the City of Kirkland on August 20, 2009, I have a few comments and corrections which need to be addressed.

Throughout your summary your refer to city staff as not being proficient at taking chlorine residual samples and not having test kits available. This statement is not correct. In fact, the test kit that we used in the 395 zone on the day of your visit, is a city owned device. It stays in my office because it was an expensive piece of equipment and has been used frequently for our Stage 2 testing. We also have portable kits in each of our two service trucks. One is an HA-CL brand and the other is a Taylor brand. For the record, you mention in your report that the residual sample taken in our 395 zone was 0.5 mg/L. The actual result was 0.67 mg/L.

I can assure you that even though you may not agree with our procedures of checking for chlorine residuals, our water crew members do know how to take them.

I do appreciate your opinions under your **Recommendations and Findings** sections as there is always room for improvement on how to do things and to improve processes. The following are my comments on your recommendations:

1. Attached is a list of our repeat coliform sites which we have revisited and confirmed that they are viable. It also explains what are procedures are. In addition, I am working with our GIS folks to have the sample stands identified on our water maps along with the location of our repeat sites.
2. We will strive to make checking for chlorine residuals more of our practice in our daily work.
3. Intrusion alarms for both of our reservoirs have been identified in our Vulnerability Assessment and are identified in our Capital Improvement Program. As we discussed during your visit, the North Reservoir improvements will take place after the current seismic upgrades and painting project. Security improvements for the South Reservoir will take place after decisions are made on whether or not the current office building which is also on the site, will be demolished. At that time, the plan is to upgrade the security around the fencing of the site as well as to the tank.
4. The overflow screen has been replaced.
5. Besides the 4" overflow pipe that you observed at the North Reservoir site which drains to the sanitary sewer, there is also a 12" pipe which drains to a quarry spall pit in the event that the 4" drain cannot keep up with the demand. Both drains originate in a junction vault upstream of the 4" line.
6. We have inspected the vent screens and hatch on the South Reservoir since your visit. They are both in working order. Quarterly inspections of the tank will become part of our maintenance schedules.

I respectfully ask that you include a hard copy of this e-mail to Kirkland's file as a response to your comments of our Sanitary Survey.

If you have any further questions or comments about our procedures or practices, please don't hesitate to call or e-mail me.

Sincerely,
Greg Neumann
City of Kirkland
Water Division Manager
425-587-3910

Caring for your infrastructure to keep Kirkland healthy, safe and vibrant

STATE OF WASHINGTON
DEPARTMENT OF HEALTH
NORTHWEST DRINKING WATER REGIONAL OPERATIONS
20425 72nd Avenue South, Suite 310, Kent Washington 98032-2388

February 19, 2015

GREG NEUMANN, WATER MANAGER
KIRKLAND, CITY OF
123 FIFTH AVE
KIRKLAND, WA 98033

RE: Kirkland, City of Water System, ID #42250T
King County
Water System Sanitary Survey

Dear Greg:

This letter is in follow up to the Department's inspection of the City of Kirkland water system on November 5, 2014. I apologize for the delay in getting this report to you. Inspections are required by the drinking water regulations (WAC 246-290) every 3-5 years. The last survey was in August 20, 2009. With your recent coliform history, your next survey will be scheduled in 2019. The purpose of the routine survey was to assess the overall operation, maintenance and management of the water system towards ensuring the distribution of safe and reliable drinking water.

Thanks to you and Steve Ensminger for facilitating the survey site visit. It is obvious that you and your staff are committed to operating your system in a thoughtful and professional manner. Thanks for sending the follow up photos of the reservoirs , you will see them attached at the end of my survey write up.

Enclosed is a copy of my Sanitary Survey Notes. They reflect my understanding of your water system and highlight the key issues we discussed during my visit. Please, **in the next 45 days**, send photos of things you can complete in the short term and send me an action plan of how and when you are able to address the remaining issues.

Significant Deficiencies:
None observed.

Significant Findings:
None observed.

Observations:
1. Every water system is required to prepare a coliform monitoring plan (CMP) for their distribution system. The information provided in the 2014 WSP is for the SPU Regional Monitoring Plan.

Please provide the following:

- A CMP for the City of Kirkland which includes a map of the routine and repeat sampling location. A template is available on our website: http://www.doh.wa.gov/CommunityandEnvironment/DrinkingWater/Contaminants/Coliform/PreparingaColiformMonitoringPlan/LargeorMultipleSource
- Standard operating procedures (SOPs) for coliform sampling
- *E.coli* response plan for how the City would implement a boil water advisory in the event of an acute MCL violation

A CMP template can be found on our website here: http://www.doh.wa.gov/Portals/1/Documents/Pubs/331-036.pdf.

2. As part of the construction submittal exception, the City is required to complete CCRs for distribution projects and keep this documentation on file. Please submit CCRs for main replacement projects conducted by the City for the last 5 years.

3. Thank you for the as built drawings for the 650 Zone Booster Pump Station. This project should have been sent to the Department for review and approval when it was in design and construction. As requested in the pre-plan meeting for the WSP update, I would also like to see the as built drawings for the 24-inch main installed on NE 85th Street. If you have questions on what type of water system improvements and/or design changes are required for Department review, please call me to discuss and we can figure it out together.

4. Monitoring for asbestos in the distribution system is required as asbestos cement pipe comprises nearly 21% of the City's distribution system. No sample results found in Sentry database. The 2014 WSP indicates samples were collected in 2005 and 2013. Please provide the results for recent asbestos sampling and coordinate with the laboratory to ensure results are sent to the Department for data entry.

5. The City's WSP Update was due in August 2014. The 2014 Water System Plan Update was submitted in September 2014. A comment letter was sent to the City in December 2014. Please provide a response to the comment letter as soon as possible so we can get the WSP approved.

6. Under the Municipal Water Law, the City is required to develop and adopt a water use efficiency goal for a six year period, typically synonymous with the Water System Plan Update schedule. Please provide the City's goal for the 2014 through 2019 time frame.

Recommendations:

7. Recommend City develop a monitoring program to understand baseline water quality. The City receives weekly reports from SPU showing chlorine residual at two points in the distribution system. The City should consider sampling for chlorine residual (and other water quality paramters such as HPC, temperator, pH, conductivity, etc.) at additional locations within the sytem on a regular frequency to determine baseline water quality. This information should be documented and reviewed for seasonal patterns.

As of January 2014, fees for sanitary surveys (established in WAC 246 290 990) are based on the actual number of hours spent preparing for, conducting and documenting the survey. Please pay the

invoice amount of $1,224 (Sanitary Survey Fee Worksheet is attached). Please remit your complete payment in the form of a check or money order within thirty days of the date of this letter to: **WSDOH, Revenue Section, PO Box 1099, Olympia WA 99507-1099.**

If you have any questions or any corrections to the report, please contact me at Paige.Igoe@doh.wa.gov or (253) 395-6764.

Sincerely,

Paige S. Igoe, PE
Northwest Regional Office
Office of Drinking Water

Enclosures

cc: Public Health – Seattle & King County

Washington State Department of Health
Division of Environmental Health
Office of Drinking Water

Office of Drinking Water
INVOICE
Engineering, Planning, and Sanitary Survey Review Form

TO: GREGORY NEUMANN
KIRKLAND, CITY OF
123 5TH AVE
KIRKLAND WA 98033

ATTN: ACCOUNTS PAYABLE DEPT

Invoice Number	N01882
Invoice Date	February 20, 2015
Billing Period	30 days NW

DATE	DESCRIPTION	QTY	COST	AMOUNT
2/20/2015	SURVEY FEE KIRKLAND, CITY OF KING COUNTY PWS ID 42250 DATE OF SURVEY: 11/5/2014	1	1	$1224.00
	Total			**$1224.00**
	Payment due within 30 days. Interest shall accrue at 1% per month after 30 days.			

Make Checks Payable to Department of Health
Return Lower Portion to:
Department of Health
PO Box 1099
Olympia, WA 98507-1099

Office of Drinking Water
Engineering, Planning, and Sanitary Survey Review Form

NAME	KIRKLAND, CITY OF
INVOICE NUMBER	N01882
INVOICE DATE	February 20, 2015 NW
AMOUNT	**$1224.00**

Return to:
Department of Health
Revenue Section
PO Box 1099
Olympia, WA 98507-1099

DOH Form #331-332

For persons with disabilities, this document is available on request in other formats. To submit a request, please call 1-800-525-0127 (TTY 1-800-833-6388).

2 044129 00878

SANITARY SURVEY FEE WORKSHEET

Department of Health
Office of Drinking Water
Sanitary Survey Time Tracking

System Name	Kirkland, City of	PWS ID #	42250
County	King		
Surveyor	Paige Igoe	Date of Survey:	11/05/14

System over 10,000 Connections? YES

	Quantity				Cost
Department of Health Paid Costs	**Hours/Miles**				
Survey program RO Coordination	1	$	102	$	102.00
Survey Program Administrative Support	1	$	102	$	102.00
Travel expenses (Mileage)	44		(# Miles) x ($.337/Mile)	$	14.81
Technical Assistance	1	$	102	$	102.00
	2.5	$	-	$	255.00
Total Department of Health Costs to Perform All Surveys				$	575.81
Water System Paid Costs	**Hours**				
Scheduling, research, prep	1	$	102	$	102.00
Survey Field Work	6	$	102	$	612.00
Survey documentation – preparation of survey report to the purveyor	5	$	102	$	510.00
Additional Water System Paid Costs for systems serving 10,000 or more connections					
Costs for Systems >10,000 Connections	**Hours**				
Travel Time			102	$	-

Total Cost of Survey	$	1,799.81
Total Department of Health Unreimbursed Costs	$	575.81
Water System Paid Costs (More than 10,000 Connections)	**$**	**1,224.00**

STATE OF WASHINGTON
DEPARTMENT OF HEALTH
NORTHWEST DRINKING WATER REGIONAL OPERATIONS
20425 72nd Avenue South, Suite 310, Kent Washington 98032-2388

SYSTEM INSPECTION / MEETING SUMMARY

Date: November 5, 2014

KIRKLAND, CITY OF - King County (ID# 42250T)

Persons Attending:

Greg Neumann, Steve Ensminger – City of Kirkland
Paige Igoe - Washington State Department of Health

Purpose: Routine Sanitary Survey

BOLD TYPE INDICATES ITEMS NEEDING ATTENTION (SEE SUMMARY PROVIDED AT END OF REPORT)

WATER FACILITIES INVENTORY:

Group A Community System

Existing Connects	=	9,484 single family; 9872 multifamily; 733 non-residential
Population	=	40,648 full time residential
Engineering Capacity	=	Unspecified (see WSP)

LAST SANITARY SURVEY:

The last sanitary survey was conducted by the Washington State Department of Health (the Department) staff on August 20, 2009. The following recommendations were made:

- Staff evaluate repeat sampling sites and practice coliform sampling. *Status: Ongoing.*
- Staff should have chlorine test kits and be proficient in their use. *Status: Complete.*
- Staff should monintor chlorine residual throughout the distribution system in order to buld a better understanding of residual levels. *Status: Not have a regular program in place.*
- Intrusion alarms should be installed on both storage tank hatches. *Status: Not yet, identified in Capital Improvement Program; other security measures in place at reservoir sites.*
- Overflow screens at the North Reservoir should be repaired. *Status: Complete.*
- The North Reservoir overflow sizing should be evaluated by engineering staff and upgraded as part of the rehab project. *Status: 4-inch and 12-inch pipes existing.*
- Staff should inspect integrity of hatches and screens on a quarterly basis. *Status: Now a part of the regular maintenance schedules.*

SYSTEM OVERVIEW:

The City of Kirkland (the City), a municipal corporation, is located in King County, along the eastern shore of Lake Washington. The City boundary encompasses 18.2 square miles, extending north to NE 145th Street, east to the Sammamish River, and furthest south to State

Route 520. The City provides water service within the corporate limits except for the Finn Hill, North Juanita and Kingsgate neighborhoods that are served by Northshore Utility District and Woodinville Water District. With the 2013 Totem Lake assumption, the City also serves a small area in unincorporated King County in the northeast corner of the water service area. The water service area encompasses approximately 9.8 miles. See Figure 2-1 in the 2014 ComprehensiveWater System Plan (WSP). Adjacent purveyors include the City of Redmond to the east, Northshore Utility District to the north and the City of Bellevue to the south.

The City is a member of the Cascade Water Alliance (Cascade) and is provided water under a contract between SPU and Cascade. All water supply to the City is treated and provided by Seattle Public Utilities (SPU) at three supply stations. Generally, the City receives water from the Tolt River watershed in the winter, which is supplemented from the Cedar River watershed during the peak demand season.

In 1994, the Cities of Kirkland, Redmond and Bellevue assumed King County Water District No. 81 (Rose Hill Water District). Upon assumption, all of the Rose Hill facilities were transferred to the three cities. An agreement was made to determine ownership interest in the joint facilities which include a 14.3 million gallon (MG) reservoir, an 11.2 MG reservoir, two booster pump stations, three supply interties, PRV stations and several transmission mains. The joint-use facilities serves all three cities but are operated by the City of Kirkland. The City's water system has 8 pressure zones with 35 PRV stations, 4 emergency interties and 170 miles of water main.

IMPROVEMENTS MADE SINCE THE LAST SURVEY:

Since the last survey conducted in 2009, the City has made the following improvements or completed the following projects:

- Submitted a Water System Plan (WSP) Update in September 2014.
- At the North Reservoir, completed seismic retrofit, dive inspection/cleaning, addition of security measures and installation of fencing.
- Completed replacement of a portion of a 24-inch main along NE 85th Street and approximately 4,000 LF of AC main replacement elsewhere in the system.
- The City took over operations of a portion of Redmond's service area (285 zone, Kingsgate area).

SOURCES AND INTERTIES:

The City is a member of the Cascade Water Alliance and currently obtains all of its water from SPU through three intertie connections (see table below). Cascade has entered into a contract with SPU which will guarantee its water supply through 2053. Most of the water provided to the City is from the Tolt River source. During peak season, the City can also receive Cedar River water if necessary. Water is delivered in a 66-inch transmission main that is routed along 132nd Ave NE.

STATION NAME	LOCATION	SPU STATION NUMBER	METER SIZE	MINIMUM CONTRACT HEAD (FT)	MAXIMUM FLOW RATES (GPM)
Supply Station S1	140th Ave NE and NE 70th St	72	12-inch	520	1,240
Supply Station S2	132nd Ave NE and NE 85th St	75	16-inch	535	4,080
Supply Station S3	132nd Ave NE and NE 113th St	74	10	555	4,500

Supply Station 1: Water is provided from this station to the City's 650 and 545 pressure zones. Comprised of 12-inch inlet pipe, 8-inch control valve and 8-inch and 12-inch outlet piping. Located in a below ground vault. The 8-inch control valve typically operates in a pressure control mode but can also operated in a flow control mode. The 8-inch outlet line connects to the Redmond 545 zone. The 12-inch outlet line connects to a 20-inch transmission main outside the station.

Supply Station 2: Water is provided from this station to the City's 650 and 545 pressure zones. The station is a below-grade concrete vault, upgraded in 2009. The station is comprised of 16-inch inlet pipe, 10-inch and 12-inch piping with control valves to the 545 zone, 8-inch outlet piping to the 650 zone, and two 125 hp (8,000 gpm) vertical turbine pumps. The 10-inch and 12-inch control valves regulate flow and pressure to the 545 zone. The two pumps can increase pressure of the water entering the 545 zone when insufficient pressure is available from the Seattle supply system; one pump operates at a time, controlled manually, exercised regularly.

Supply Station 3: Water is provided from this station to the City's 545 zone. The station is a below-grade concrete vault with a single 12-inch inlet pipe, a single 12-inch outlet pipe, flow meter and 3-inch and 10-inch control valves. The station can operate in a pressure control mode (typical) and a flow control mode.

Emergency Interties: The City of Kirkland maintains emergency interties Bellevue and Northshore Utility District. A summary of Kirklands's interties is presented below.

Purveyor	Size	Configuraton	Pressure Zones	Location	Notes
Bellevue	8 inch	To Kirkland	BV400 to KL285	NE Northup Way and 104th Ave NE	Manually controlled
Bellevue	8 inch	To Bellevue	KL650 to BV675	132nd Ave NE and NE 60th St	PRV controlled, to provide fire flow
Northshore	unknown	Two way	KL395 to NUD 380	NE Totem Lake Way deadend	Working on agreement
Northshore	8-inch	Two way	KL450 to NUD 366	NE 118th St and 115th Ave NE	Manually controlled

Metered Interties: The City also has three metered interties with the City of Redmond. The Redmond interties are operated manually; Redmond must notify Kirkland if they are to take water. The water is transferred from the Redmond portion of the shared service area to Redmond's well service area. Water is conveyed through these metered interties from the three SPU supply stations.

TREATMENT:
For the City's supply stations, all treatment is provided by SPU. The Tolt Treatment Facility provides filtration and ozonation of the Tolt River source (since 2000). The Cedar River supply is currently treated through screening, corrosion control, ozonation and ultraviolet light. SPU also provides disinfection and fluoridation for both the Cedar and Tolt River supplies.

STORAGE:
Two storage facilities serve the needs of the City of Kirklands's water system (see table below).

NAME	VOLUME (MG)	MATERIAL	YEAR BUILT	OVERFLOW ELEVATION	KIRKLAND OWNERSHIP PERCENTAGE
South Reservoir	11.2	Steel	1971	545	57.2%
North Reservoir	14.3	Steel	1994	450	66.0%

Both reservoirs were visited during the survey. In addition, City staff provided photos showing the reservoir vent screens and overflow screens after the survey, which are included at the end of this report.

The following observations were made at the **11.2 MG South Reservoir**:

- Located on same site as the 650 Zone Booster Pump Station.
- Internal overflow exits into catch basin on site; City staff sent photos of screen which was added after survey.
- Interior of reservoir cleaned/inspected in 2007 by Liquivision.
- Separate inlet/outlet configuration; filled with an altitude valve.
- Enclosed by fence, with locked gate.

The following observations were made at the **14.3 MG North Reservoir**:

- Interior of reservoir was cleaned in 2012 by Liquivision. City reports very little sediment, receive mostly filtered Tolt supply water from SPU.
- Separate inlet/outlet configuration. Filled by flow control/altitude valve.
- Enclosed with a fence with lockable gate; cell facilities are located in separated fenced area on site.
- Recently completed seismic retrofit and addition of security measures.
- Submersible pump located in vault on site to pump from 450 zone to 545 zone.

DISTRIBUTION:
The existing distribution system contains more than 170 miles of water main ranging in size from 2-inch to 24-inch diameter. Pipe material includes ductile iron, asbestos-cement, steel, cast iron, concrete, PVC and galvanized iron. Approximately 54 percent of the pipe in the system is 8-inch diameter and 63 percent of the pipe material is ductile iron. Fire flow is provided for customers.

The system is comprised of eight pressure zones. The pressures in the 450 and 545 zones are regulated by reservoir levels. The 650 zone is a closed zone, or a zone without storage. The 650 zone is served by the 650 Zone Booster Pump Station, which pumps water from the 545 zone into the 650 zone. When the hydraulic gradient at the supply station is higher than 650 feet, the 650 zone is served by two pressure reducing stations (PRVs). The 285, 315, 395, 510 and 590 zones are all supplied by a series of PRVs. See the hydraulic profiles included in the 2014 WSP (figures 2-2A and 2-2B). The City has 35 PRV stations, two stand-alone pressure relief stations and 15 pressure relief valves in PRV stations to protect zones from being overpressurized.

The 650 Zone Booster Pump Station is located adjacent to the South Reservoir. The 650 BPS is the sole source of supply to the 650 pressure zone when the Seattle supply does not have adequate head to provide water to the zone. Constructed in 2004, contains two 25 hp, 400 gpm vfd pumps and four 75 hp, 1,750 gpm vfd pumps. The station has a dedicated 400 kilowatt emergency generator onsite which can power the station during a power outage.

At the North Reservoir site, the North Reservoir 545 Zone Pump Station is located in a vault. The station conveys water from the 450 zone to the 545 zone; comprised of one 2,500 gpm (150 hp motor) vertical turbine pump. The pump is controlled by a flow control/altitude valve to maintain water level in the North Reservoir. This pump can also transfer water from the North Reservoir to the South Reservoir if necessary; water is used at a much higher rate in the South Reservoir.

WATER QUALITY MONITORING:
A short summary of recent water quality sampling results and monitoring compliance is provided below. Water quality results entered into our Sentry data system can be reviewed at http://www.doh.wa.gov/ehp/dw/sentry.htm.

Distribution System Monitoring Requirements

Coliform Monitoring:
The City is part of SPU's regional monitoring plan; SPU staff collect and analyze 36 samples per month (reduced from 50 samples) at six standard sampling stands located in the system. The last several years of sampling have been clean. The City had a positive routine coliform sample in November 2009; the repeats were satisfactory.

Every water system is required to prepare a coliform monitoring plan (CMP) for their distribution system. SPU may collect routine samples, but Kirkland staff is required to take repeat samples within their distribution system. From our discussion, the repeat sites have

been identified, but it was not clear whether a CMP exists. The repeat sites are meter setters; the Water Division Manager has the stab-in sampler and chlorine test kits; staff do practice sampling techniques.

Please provide the following:

- A CMP for the City of Kirkland which includes a map of the routine and repeat sampling location. A template is available on our website: http://www.doh.wa.gov/CommunityandEnvironment/DrinkingWater/Contaminants/Coliform/PreparingaColiformMonitoringPlan/LargeorMultipleSource
- Standard operating procedures (SOPs) for coliform sampling
- *E.coli* response plan for how the City would implement a boil water advisory in the event of an acute MCL violation

Lead and Copper: The City has 9 monitoring locations that are sampled for conformance with the regional monitoring plan. Last round of sampling conducted in July 2014; all samples below action levels for lead and copper.

Disinfection By Products: All samples are taken by SPU and analyzed by their Water Quality Laboratory. Started Stage 2 DBP rule sampling in May 2012. Take 4 sites quarterly. TTHM results between 18.3 and 61.5 µg/L; HAA5 results between 12.4 and 43.5 µg/L.

Asbestos: Monitoring required as asbestos cement pipe comprises nearly 21% of the City's distribution system. No sample results found in Sentry database. The 2014 WSP indicates samples were collected in 2005 and 2013. No results provided. **Please provide the results for recent asbestos sampling; coordinate with the laboratory to ensure results are sent to the Department for data entry.**

Source Monitoring Requirements

As a consecutive system and a wholesale customer to SPU, the City does not have any source monitoring responsibilities.

MANAGEMENT & OPERATIONS:

The City operates under the Council/Mayor form of government. The City Council comprised of five elected council members; council meetings are held at City Hall on first and third Tuesdays of every month. The water system, operated under the City's Public Works Department, is managed by the Water Division Manager and a staff of 10 employees.

Item	Status
Water System Plan (WSP)	• Last WSP approved August 2007; valid until August 2014. • 2014 WSP submitted September 2014; **awaiting response from City to Department comment letter sent December 2014.**
WFI Update	• WFI sent out annually to system for review and update.
Consumer Confidence Report	• In compliance, 2013 CCR received May 12, 2014.

Operating Permit	• Green
Overall Design Approval	• Yes, unspecified, see WSP for more information.
Certified Operator	• WDM3 required. Greg Neumann holds this certification.
Treatment Overview	• City does not provide any treatment; all treatment provided by SPU.
Water Quality	• Review weekly reports provided by SPU showing chlorine residual in system. • **Recommend City collect chlorine residual and other water quality parameters in distribution system to better understand baseline water quality.**
Operations and Maintenance Procedures	• PRVs are checked regularly; serviced every year. • Hydrants and valves are visited/exercised once every two years. • Check each supply station once per week. • Working on updating GIS maps with appurtenance information. • Retrofitted all air vacuum valves so vent is above ground and screened. • Do not conduct regular flushing of distribution system; will do during construction and when get taste/odor complaints.
Water Use Efficiency	• The City's goal is to achieve 88,000 gallons per day in water savings on an annual basis at full implementation by end of planning period (2008 through 2013). This goal translates to roughly 14,000 gpd; City had a savings of 24,222 gpd in 2013. • **The City must establish a goal for the next 6 year period.** • The City provides educational material; enforce an inclined block rate.
Production Data	• Meters read on a monthly basis.
Consumption Data	• System is fully metered. Meters read on a regular basis.
Distribution System Leakage	• In 2011, leakage reported as 6.4%. • In 2012, leakage reported as 0.5%. • In 2013, leakage reported at -0.7% • Three year annual average is 3.9%. • Staff says negative DSL reading in 2013 is due to with discrepancies amongst the shared facilities. The WUE annual report states the City is working with SPU and the Cities of Redmond and Bellevue to determine the real DSL numbers for Kirkland's system. • City tracks water used for construction and flushing. • Working on a customer meter replacement program; currently replacing 500 meters per year.
Emergency Response Program	• Have 24-hr pager and emergency contact list. • Have City PIO for events; new PW Director still determining who participates in incident command structure during an emergency; some staff ICS trained.

Cross Connection Control Program	• Active program in place; approximately 3,800 devices installed; 264 high hazard facilities (mostly medical facilities, piers/docks). • Aggressive on meeting compliance for 100% of devices tested annually. Send out one letter and then follow up with a door tag and a phone call. • Staff will inspect any new construction. • Have authority to implement program and disconnect user if non-compliant.
Financial Viability Program	• Did not discuss in detail; City has reserves, financially stable.
Asset Management	• Did not discuss in detail. Working to get AC pipe in system replaced. Have what City perceives to be a high rate of main breaks, mainly AC pipe. Have skilled crew to repair breaks and notify customers. • Have a system to determine what pipe gets replaced and when. • **As part of the submittal exception process, the City is required to keep on file the construction completion report (CCR) for every distribution main replacement project.**
Reliability	• Rely on SPU for reliability at source. • 650 Zone Booster Pump Station has an emergency generator on site.
Satellite System Management	• The City has accepted the responsibility of providing service within its retail service area. If necessary, the City will take the necessary steps to become an approved satellite management agency (SMA) for systems within its retail service area.

SANITARY SURVEY FINDINGS:

This report documents the findings of the sanitary survey site visit. The following summarizes findings that need your attention. Please provide me with a plan of how you plan to address each of the categories below within 45 days.

Significant Deficiencies:

None observed.

Other Findings:

None observed.

Observations:

1. Every water system is required to prepare a coliform monitoring plan (CMP) for their distribution system. The information provided in the 2014 WSP is for the SPU Regional Monitoring Plan. Please provide the following:
   - A CMP for the City of Kirkland which includes a map of the routine and repeat sampling location. A template is available on our website:

http://www.doh.wa.gov/CommunityandEnvironment/DrinkingWater/Contaminants/Coliform/PreparingaColiformMonitoringPlan/LargeorMultipleSource

- Standard operating procedures (SOPs) for coliform sampling
- *E.coli* response plan for how the City would implement a boil water advisory in the event of an acute MCL violation

A CMP template can be found on our website here: http://www.doh.wa.gov/Portals/1/Documents/Pubs/331-036.pdf.

2. As part of the construction submittal exception, the City is required to complete CCRs for distribution projects and keep this documentation on file. Please submit CCRs for main replacement projects conducted by the City for the last 5 years.
3. Thank you for the as built drawings for the 650 Zone Booster Pump Station. This project should have been sent to the Department for review and approval when it was in design and construction. As requested in the pre-plan meeting for the WSP update, I would also like to see the as built drawings for the 24-inch main installed on NE 85th Street. If you have questions on what type of water system improvements and/or design changes are required for Department review, please call me to discuss and we can figure it out together.
4. Monitoring for asbestos in the distribution system is required as asbestos cement pipe comprises nearly 21% of the City's distribution system. No sample results found in Sentry database. The 2014 WSP indicates samples were collected in 2005 and 2013. Please provide the results for recent asbestos sampling and coordinate with the laboratory to ensure results are sent to the Department for data entry.
5. The City's WSP Update was due in August 2014. The 2014 Water System Plan Update was submitted in September 2014. A comment letter was sent to the City in December 2014. Please provide a response to the comment letter as soon as possible so we can get the WSP approved.
6. Under the Municipal Water Law, the City is required to develop and adopt a water use efficiency goal for a six year period, typically synonymous with the Water System Plan Update schedule. Please provide the City's goal for the 2014 through 2019 time frame.

Recommendations:

7. Recommend City develop a monitoring program to understand baseline water quality. The City receives weekly reports from SPU showing chlorine residual at two points in the distribution system. The City should consider sampling for chlorine residual (and other water quality paramters such as HPC, temperator, pH, conductivity, etc.) at additional locations within the sytem on a regular frequency to determine baseline water quality. This information should be documented and reviewed for seasonal patterns.

When items are completed, please send me a status update and/or photo verification of the corrections made (as applicable). Include the system name, ID number, and the date the deficiencies were corrected. You can send them to me by e-mail at paige.igoe@doh.wa.gov or by mail at 20425 72nd Ave S, Suite 310, Kent, WA 98032.

11.2 MG South Reservoir: (L) and (R) View of South Reservoir, co-located on site with 650 Zone Booster Pump Station. Shared facility, Kirkland operates and maintains facility. Steel construction, built in 1971. Site is fenced with a locked gate.

11.2 MG South Reservoir: (L) Internal overflow exits into catch basin on site. During survey, the overflow was not screened. Reservoir is 50 feet high. (R) City staff screened the overflow in the catch basin and sent this photo for documentation. Great job!

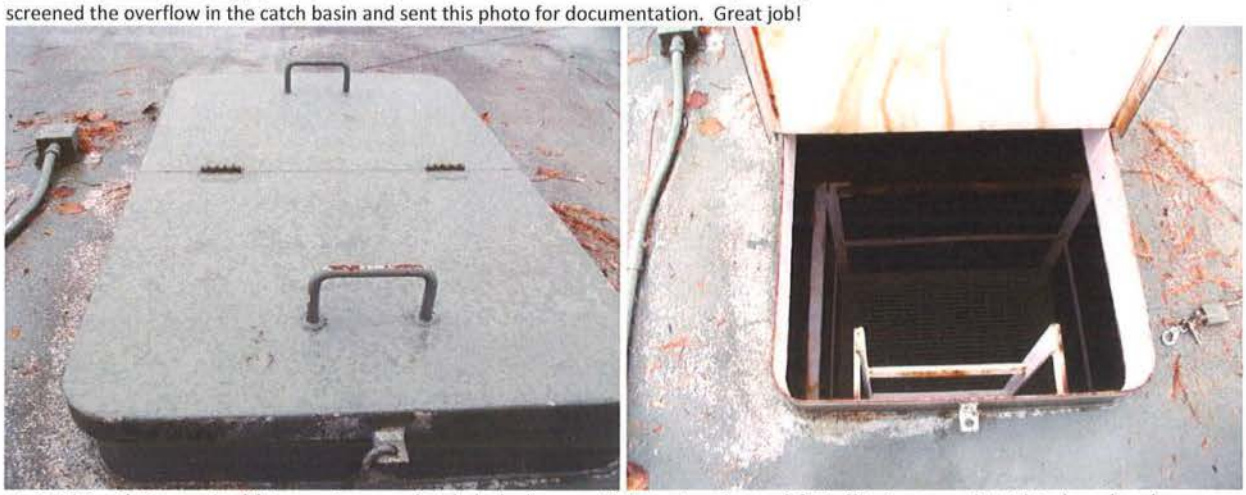

11.2 MG South Reservoir: (L) Reservoir access hatch; locked access. No intrusion alarms. (R) Staff indicates seal is tight when closed.

11.2 MG South Reservoir: (L) View of reservoir vent. (R) Up close picture of vent screening; appears intact. Staff should inspect seals and screens on a regular basis.

650 Zone Booster Pump Station at 11.2 MG South Reservoir Site: (L) and (R) View of 650 Zone Booster Pump Station facility located next to 11.2 MG South Reservoir.

650 Zone Booster Pump Station at 11.2 MG South Reservoir Site: (L) Four pumps (1,750 gpm, 75 hp motors) with variable frequency drives, pump 545 zone water into the 650 zone when needed. Most of the year, hydraulic grade from SPU is high enough to provide water to the 650 zone. Staff exercises the pumps regularly. (R) Two pumps (400 gpm, 30 hp motors) with variable frequency drives.

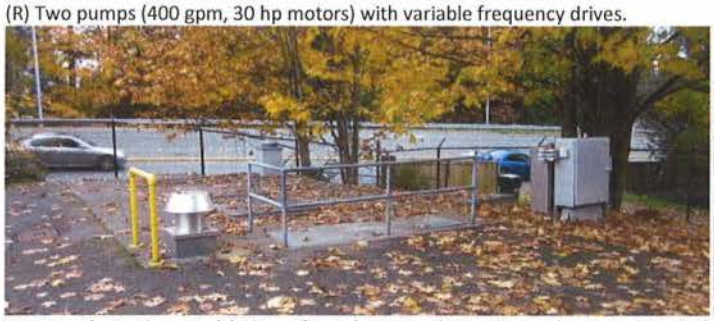

SPU Supply Station S2: (L) View of supply station located in underground vault. (R) Photo of vault with access hatch open. Provides water to 545 and 650 pressure zones. Upgraded in 2009.

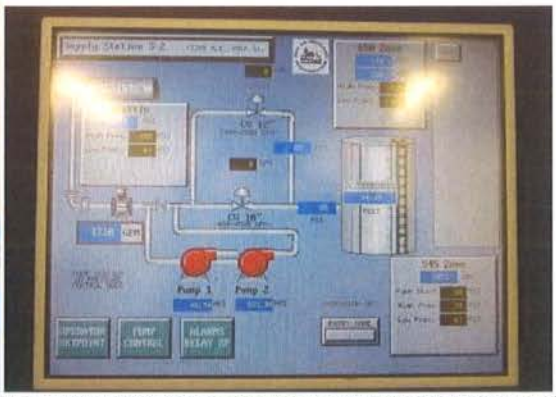

SPU Supply Station S2: (L) Contains two 8,000 gpm vertical turbine pumps which can provide water to the 545 zone when insufficient head at inlet from SPU. (R) Local RTU, operator controls pumps manually, seldom used. Pumps are exercised regularly by City staff.

14.3 MG North Reservoir: (L) Overview of Reservoir. (C1) and (C2) View of reservoir showing ladder and casing for conduits. (R) Internal overflow exits to this manhole located onsite.

14.3 MG North Reservoir: (L) and (C) View of pipes inside manhole. None screened at time of survey. (R) City staff installed screens on pipes after survey; provided photo for documentation. Thank you!

14.3 MG North Reservoir: (L) and (R) View of reservoir vent.

14.3 MG North Reservoir: (L) Close up of Reservoir screening, appears intact. (R) Reservoir access hatch, lockable.

14.3 MG North Reservoir: (L) and (R) Access hatch open, staff say seal is tight when closed.

North Reservoir 545 Zone Pump Station located at the 14.3 MG North Reservoir Site: (L) View of underground vault at reservoir site that houses the single vertical turbine pump. (R) View of equipment. One pump (2,500 gpm with 150 hp motor). Can fill North Reservoir and transfer water to South Reservoir if needed. City is planning on redoing station, adding vfd controls, etc.

Kim Kuzak

From: Michele Campbell
Sent: Wednesday, February 25, 2015 8:38 PM
To: Kim Kuzak
Subject: FW: Kirkland's response to our Sanitary Survey comments and recommendations
Attachments: Sanitary Survey Comments.tif; Random Chlorine Residual Form.xlsx

FYI

From: Greg Neumann [mailto:GNeumann@kirklandwa.gov]
Sent: Wednesday, February 25, 2015 10:57 AM
To: 'Igoe, Paige S (DOH)'
Cc: Erin Devoto; Michele Campbell
Subject: Kirkland's response to our Sanitary Survey comments and recommendations

Good morning Paige,

Attached are pages 7 thru 9 from your Sanitary Survey for the City of Kirkland (ID # 42250). Thank you for your comments and recommendations. Here are Kirkland's responses and timeframes for completion:

#1 – The CMP for the City of Kirkland will be submitted with our final WSP by March 5th 2015 as required by your review letter.

#2 – The CCR's are being gathered by our Development Services and Capital Improvement Divisions. I anticipate being able to forward all of the copies to you by the end of March.

#3 – The project to complete the 24" main build in NE 85th St is not complete. The as-built drawings will not be complete until the project is completed. Most likely, this project will not be complete until the middle of April. I will forward you a copy of the as-built drawings when they are available

#4 – In Chapter 6, page 6-14 of our "draft" WSP the text says *"The City was not required to perform asbestos monitoring between 2005 and 2013. Samples taken prior to 2005 were all below the MCL for asbestos".*

That being said, I have made contact with Lab/cor, Inc. in Seattle to make arrangement to have a sample analyzed. I hope to have this accomplished by the end of March.

#5 – The City's WSP will be submitted by RH2 to your office by the March 5th deadline for you final approval.

#6 – Appendix K of the final WSP will address the Municipal Water Law requirements.

#7 – To correct your statement, we get weekly chlorine residual and temperature reports from six (6) sources. They are numbered KI-1 thru KI-6. In addition to these six points we also record residuals and temperature from our Stage 2 sites on a quarterly basis. These four (4) sites are in addition to the SPU sites.

Since you were here to do our Survey, I have created a form to do random samples throughout our system to record this information in addition to the ten (10) sites above. I have attached the form to this email.

Please let me know if there is anything that I have missed or any other information you may need.

Thank you,

Greg Neumann
City of Kirkland
Water Division Manager
425-587-3910

APPENDIX X

Stage 2 DBP Monitoring Plan

UNITED STATES ENVIRONMENTAL PROTECTION AGENCY
REGION 10
1200 Sixth Avenue
Seattle, WA 98101

Great job Von!
Thanks for the
hard work.
Greg

August 24, 2006

Reply to
Attn Of: OWW-136

Gregory Neumann
City of Kirkland
123 5th Avenue
Kirkland, WA 98033

RE: Stage 2 Disinfection Byproducts Rule (Stage 2 DBPR) Initial Distribution System Evaluation (IDSE) Standard Monitoring Plan

Dear Mr. Neumann:

I am writing to inform you that the Stage 2 DBPR IDSE standard monitoring plan for the City of Kirkland water system has been approved.

IDSE monitoring must be conducted at each of the monitoring locations and dates listed in your standard monitoring plan. Please remember, if you deviate from the approved plan for any reason, you must include an explanation for the deviation in your IDSE report, which is due no later than January 1, 2009. During each sampling event, you must collect a dual sample set at each monitoring location. One sample must be analyzed for TTHM and the other must be analyzed for HAA5. EPA-approved methods must be used for analysis of your TTHM and HAA5 samples.

Additional reference information is attached for your use. If you have any questions, please contact me at (206) 553-1890 or marshall.wendy@epa.gov. For more information regarding the Stage 2 DBPR visit the Stage 2 DBPR website at www.epa.gov/safewater/disinfection/stage2.

Sincerely,

Wendy Marshall

Wendy Marshall
Environmental Scientist

Enclosure

IDSE Submission

Confirmation Page

Your Plan / Report was submitted successfully! Please print this page for your reference.

Confirmation #	926
Date Submitted:	08/10/2006

If you have selected sending by hardcopy in the Attachments section or wish to submit a hard copy version of your plan, report, or attachments in addition to electronically submitted files please mail or e-mail the files to one of the following addresses:

Mailing Address:

US EPA-IPMC
PO Box 98
Dayton, OH 45401-0098

E-mail Address:

stage2mdbp@epa.gov

Home

Standard Monitoring Plan Entry

I. IDSE General Information

*PWS ID	WA5342250
*PWS Name	KIRKLAND CITY OF
*PWS Address	123 5TH AVE
*City	KIRKLAND
*State	WA
*Zip	98033
*Population Served	36504
*System Type	CWS
*Source Water Type	SWP
*Buying / Selling Relationships	Consecutive System

C. PWS Operations

Residual Disinfectant Type	☑ Chlorine	☐ Chloramines	☐ Other	
Number of Disinfected Sources	Surface		GWUDI	
	Ground		Purchased	2

D. Contact Person

*Contact Name	Vandana Ingram-Lock	
Title		
Phone Number	4255873907	ext.
Fax		
E-mail Address	vlock@ci.kirkland.wa.us	

Standard Monitoring Plan Entry

III. Selecting Standard Monitoring Sites

A. Data Evaluated Check each box corresponding to the data that you used to select each type of standard monitoring site.

Data Type	Type of Site			
	Near Entry Point	Average Residence Time	High TTHM	High HAA5
System Configuration:				
Pipe layout, locations of storage facilities	☑	☑	☑	☑
Locations of sources and consecutive system entry points	☑	☐	☑	☑
Pressure zones	☐	☑	☐	☐
Information on population density	☐	☑	☐	☐
Locations of large customers	☐	☐	☐	☐
Water Quality and Operational Data:				
Disinfectant residual data	☐	☑	☑	☑
Stage 1 DBP data	☐	☑	☑	☐
Other DBP data	☐	☐	☐	☐
Microbial monitoring data	☐	☐	☐	☐
Tank levels data, pump run times	☐	☑	☑	☑
Customer billing records	☐	☑	☐	☐
Advanced Tools:				
Water distribution system model	☐	☐	☐	☐
Tracer study	☑	☐	☐	☐

B. Summary of Data.* Provide a summary of data you relied on to justify standard monitoring site selection.

Standard Monitoring Plan Entry

IV. Justification of Standard Monitoring Sites *

You are required to complete this section in its entirety before submitting the Plan.

#	Standard Monitoring Site ID (from Site Type map)1		Justification
1	Site #1	High HAA5	Site is located north of the entry point site, in pressure zone 450, and is in an area with typically high chlorine residual level. Chlorine residuals range from 1.2mg/L to 1.3 mg/L in this area of the system.
2	Site #2	High HAA5	Site is located south of the entry point site, in pressure zone 650 and is in an area with typically high chlorine residual level. Chlorine residuals range from 1.2mg/L to 1.3 mg/L in this area of the system.
3	Site #3	High TTHM	Site is located at the southernmost area of the system with typically low demand, downstream of storage facilities and is at a point in the system containing no interties with another source. It is assumed that it would have a low chlorine residual if it was a test site.
4	Site #4	High TTHM	Site is located in the furthest east area of the system with typically low demand, downstream of storage facilities and is at a point in the system containing no interties with another source. It is assumed that it would have a low chlorine residual if it was a test site.
5	Site #5	High TTHM	Site is located at the northernmost area of the system with typically low demand, downstream of storage facilities and is at a point in the system containing no interties with another source. This site is in the vacinity of the Stage 1 site with chlorine residual ranging from .17 mg/L to .16 mg/L.
6	Site #6	Near Entry Point	This is one of the three entry points to the system and is the most direct source from the supplier.
7	Site #7	Average Residence Time	This site represents average residence time in the south central part of the system. Based on its proximity to a change in pressure zones, master meter consumption records and under-sized pipes, it is believed that this site is representative of average residence time.
8	Site #8	Average Residence Time	This site represents average residence time in the north central part of the system. Based on its proximity to a change in pressure zones, master meter consumption records and the under-sized pipes, it is believed that this site is representative of average residence time.

1 Verify that site IDs match IDs in Section IV and on your distribution system schematic (See Section VII of this form).

Standard Monitoring Plan Entry

VI. Planned Stage 1 DBPR Compliance Monitoring Schedule

If you are a consecutive system that is not required to conduct Stage 1 DBPR compliance monitoring, enter none under Stage 1 DBPR Monitoring Site ID and none under Period 1.

Stage 1 DBPR Monitoring Site ID (from map)1	Projected Sampling Date (date or week)2			
	Period 1	Period 2	Period 3	Period 4
NONE	NONE			

1 Verify that site IDs match IDs on your distribution system schematic (See Section VII of this form). Add additional monitoring sites if you are required to monitor at more than 8 Stage 1 DBPR sites.

2 period = monitoring period. Complete for the number of periods in which you must conduct Stage 1 DBPR monitoring during IDSE monitoring. Can list exact date or week (e.g., week of 7/9/07)

Standard Monitoring Plan Entry

VII & VIII Schematic & Attachments

The following is a list of attachments that have already been submitted.

File Name	Date Uploaded
Distribution System Schematic	2006-08-09 17:29:20.0

If you prefer to send attachments via mail or e-mail, please check the box for "Sending attachments by mail". You may mail your attachments to one of the following addresses:

Mailing Address:
STAGE2 DBPR
US EPA-IPMC
PO Box 98
Dayton, OH 45401-0098

E-mail Address:

stage2mdbp@epa.gov

☐

Sending Attachments by Mail

Enter a description of the items that will be mailed.

Standard Monitoring Plan Entry

V. Peak Historical Month and Standard Monitoring Dates

A. *Peak Historical Month August

B. If multiple Sources, Source Used to Determine Peak Historical Month (enter "N/A" if only one source in your system):

N/A

C. *Peak Historical Month Based On (check all that apply):

☐ High TTHM

☑ Warmest water temperature

☐ High HAA5

If you used other information to select your peak historical month, explain here:

D. Proposed Standard Monitoring Dates

You are required to complete this section in its entirety before submitting the Plan.

Standard Monitoring Site ID (from map)*	Projected Sampling Date (day or week)** Period 1	Period 2	Period 3	Period 4	Period 5	Period 6
Site #1	10/2007, wk 1	12/2007, wk 1	2/2008, wk 1	4/2008, wk 1	6/2008, wk 1	8/2008, wk 1
Site #2	10/2007, wk 1	12/2007, wk 1	2/2008, wk 1	4/2008, wk 1	6/2008, wk 1	8/2008, wk 1
Site #3	10/2007, wk 1	12/2007, wk 1	2/2008, wk 1	4/2008, wk 1	6/2008, wk 1	8/2008, wk 1
Site #4	10/2007, wk 1	12/2007, wk 1	2/2008, wk 1	4/2008, wk 1	6/2008, wk 1	8/2008, wk 1
Site #5	10/2007, wk 1	12/2007, wk 1	2/2008, wk 1	4/2008, wk 1	6/2008, wk 1	8/2008, wk 1
Site #6	10/2007, wk 1	12/2007, wk 1	2/2008, wk 1	4/2008, wk 1	6/2008, wk 1	8/2008, wk 1
Site #7	10/2007, wk 1	12/2007, wk 1	2/2008, wk 1	4/2008, wk 1	6/2008, wk 1	8/2008, wk 1
Site #8	10/2007, wk 1	12/2007, wk 1	2/2008, wk 1	4/2008, wk 1	6/2008, wk 1	8/2008, wk 1

*** Site IDs should match IDs on your distribution system schematic (See Section VII).**

**** period = monitoring period. Complete for the number of periods from Section II.C.**

As a member of Cascade Water Alliance, Kirkland's water is purchased from Seattle and then distributed via Kirklands water distribution system. Seattle performs the sampling and treatment for Kirklands drinking water. The Kirkland Water Division operates and maintains the systems water distribution lines, pump stations and storage reservoirs. Most of Kirkland's water comes from the Tolt Filtration Plant. Since 2001, the Tolt has been improving Kirklands ability to provide a higher level of microbial protection while maintaining or reducing disinfection by-product levels. To select our standard monitoring locations, we used our up-to-date water distribution system map to plot data and select sites. Our map shows locations and sizes of all pipes, storage tanks, pumping stations, and Stage 1 and Stage 2 sample sites. In addition, we utilized Stage 1 data provided by Seattle and EPA guidelines. HAA5 sites were in an area with typically high chlorine residual level. Chlorine residuals range from 1.2 mg/L to 1.3 mg/L in this area of the system. TTHM sites were selected in areas of the system with typically low demand, downstream of storage facilities, furthest away from entry points, and at points in the system containing no interties with another source. The sites are in various pressure zones. TTHM levels range from 18.28 ug/L - 48.4 ug/L (2003). It was assumed that these would have low chlorine residual if tested. The Near Entry Point site is one of the three entry points to the system and is the most direct source from the supplier. The Average Residence Time sites were chosen based on their proximity to a location where there is a change in pressure zones, meter consumption records of users in the area and the existence of under-sized pipes.

Standard Monitoring Plan Entry

I. IDSE Requirements

A. Number of Required Standard Monitoring Sites

High TTHM	3
High HAA5	2
Near Entry Point Sites	1
Average Residence Time Sites	2
Total	8

Note: If you have fewer entry points than required near entry point sites, you will sample at more TTHM and/or HAA5 sites, but your total number of sites will not change. See chapter 7 step 2 of the IDSE Guidance Manual for more information.

B. Schedule

Schedule 1

C. Required Standard Monitoring Frequency

○

During peak historical month (1 monitoring period)

○

Every 90 days (4 monitoring periods)

◉

Every 60 days (6 monitoring periods)

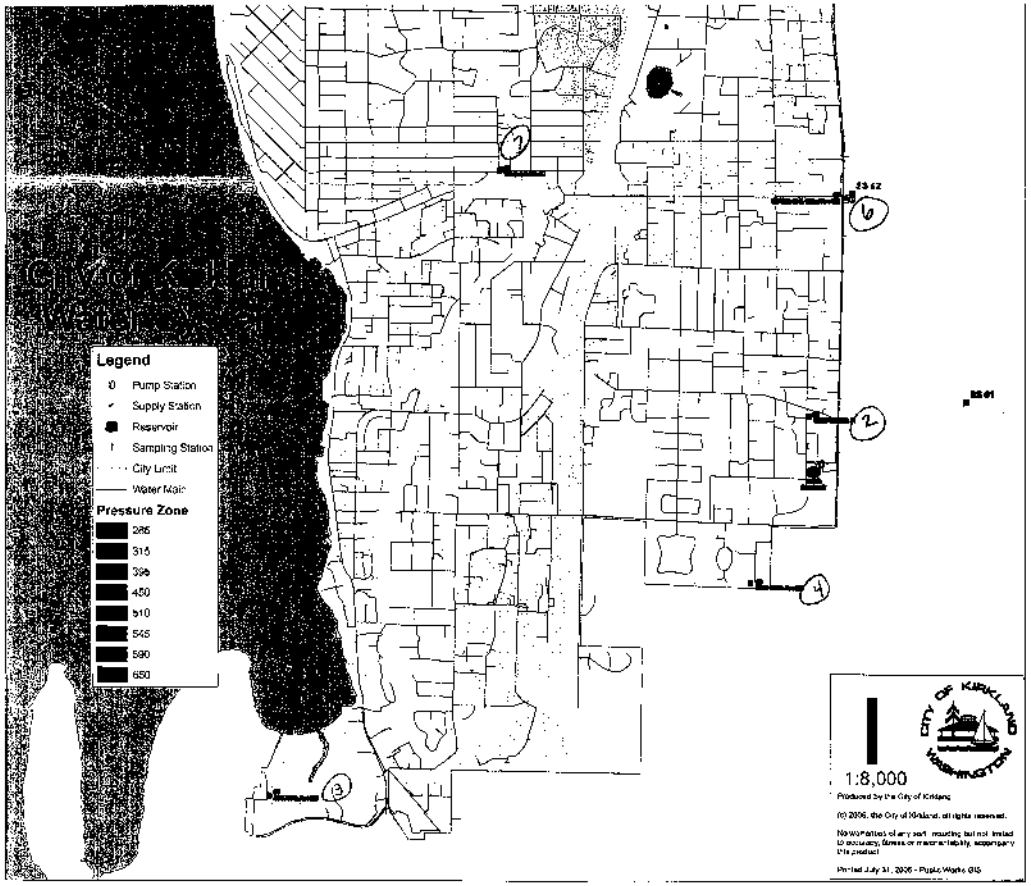
Legend
Pump Station
Supply Station
Reservoir
Sampling Station
City Limit
Water Main
Pressure Zone
285
315
395
450
510
545
590
650
1:8,000
Produced by the City of Kirkland
(c) 2006, the City of Kirkland, all rights reserved.
No warranties of any sort, including but not limited to accuracy, fitness or merchantability, accompany this product.
Printed July 31, 2006 - Public Works GIS
CITY OF KIRKLAND
WASHINGTON

APPENDIX Y

Calibration Results

Note: Accuracies were slightly lower than what is generally desired due to PRVs servicing several of the pressure zones and the inability to run the flow test long enough for the large PRV to fully open and stabilize.

City of Kirkland
Hydraulic Model Calibration Data

Pitot Assembly Nozzle Diameter: 2.5"

				First Hydrant Flow Tested					Second Hydrant Flow Tested					Hydrant for Pressure Testing							HGL			Model Results					After Calibration						Residual	Residual
				Field Measurements					Field Measurements					Field Measurements																							
Test No.	Date	Time	Duration of Test (mins)	Location	Hyd #	Model Node #	Pitot Read (psi)	Flow Calc (gpm)	Location	Hyd #	Model Node #	Pitot Read (psi)	Flow Calc (gpm)	Location	Hyd #	Model Node #	Node Elev.	Static Pressure (psi)	Residual Pressure (psi)	Diff. Pressure (psi)	HGL (ft)	Model HGL (ft)	HGL Diff. (ft)	Static Pressure (psi)	Residual Pressure (psi)	Static Pressure Diff. (psi)	Field Diff Pressure (psi)	Model Diff Pressure (psi)	Static Pressure (psi)	Residual Pressure (psi)	Static Pressure Diff (psi)	Residual Pressure Diff (psi)	Field Diff Pressure (psi)	Model Diff Pressure (psi)	Field & Model Diff Press (psi)	Field & Model Diff Press Accuracy (%)
285 Zone																																					
1	13-Jul	8:59 AM	4	12002 103rd Ave NE	J4-038	J-44	30	852	Not necessary (over 8 psi drop)					10270 NE 121st St	J4-037	J-46	158	52	41	11	278	269	9	48.1	45.7	3.9	11	2.4	50.2	47.7	1.8	-6.7	11	2.5	-6.7	16%
2	13-Jul	9:26 AM	3	10009 NE 112th St	J4-008	J-2682	72	1,250	Not necessary (over 8 psi drop)					11026 100th Ave NE	I4-007	J-606	55	94	78	16	272	268	5	91.9	84.5	2.1	16	7.4	94.1	86.7	-0.1	-8.7	16	7.4	-8.7	11%
3	15-Jul	11:03 AM	2	437 3rd St	F4-037	J-1305	70	1,238						123 5th Ave	F4-036	J-1269	108	73	69	4	277	271	6	70.6	68.5	2.4	4	2.1	72.6	68.9	0.4	0.1	4	3.7	0.1	0%
4	14-Jul	10:38 AM	3	1305 NE 64th St	D4-015	J-1997	45	1,026	6502 102nd Pl NE	D4-019	J-2007	45	1,026	6416 103rd Ave NE	D4-020	J-1999	128	64	52	12	276	271	5	61.9	58.1	2.1	12	3.8	63.9	58.1	0.1	-6.1	12	5.8	-6.1	12%
5	14-Jul	10:18 AM	3	4020 Lake Washington Blvd	B4-014	J-2578	50	1,077	4030 Lake Washington Blvd	B4-017	J-2576	40	974	4040 Lake Washington Blvd	B4-018	J-238	140	60	50	10	279	276	3	58.7	49.9	1.3	10	8.8	-	-	1.3	0.1	10	8.8	0.1	0%
315 Zone																																					
6	14-Jul	11:03 AM	4	1010 6th St W	G5-038	J-1168	32	875	844 4th St W	G5-019	J-1164	15	604	437 10th Ave W	G5-033	J-1166	140	67	55	12	295	310	-15	73.6	65.8	-6.6	12	7.8	69.3	62.7	-2.3	-7.7	12	6.6	-7.7	14%
7	15-Jul	11:20 AM	2	401 13th Ave	G4-024	J-1094	35	914						1224 5th St	G4-023	J-1098	155	63	53	10	301	305	-4	64.9	59.6	-1.9	10	5.3	-	-	-1.9	-6.6	10	5.3	-6.6	12%
395 Zone																																					
8	14-Jul	7:24 AM	4	12321 120th Pl NE	J2-012	J-169	70	1,238	Not necessary (over 8 psi drop)					12010 120th Pl NE	J2-011	J-168	159	95	84	11	378	379	0	95.2	92.3	-0.2	11	3	95.2	86.4	-0.2	-2.4	11	8.8	-8.3	10%
9	14-Jul	7:57 AM	3	12918 NE 122nd Lane	J1-027	J-2735	12	550	Not enough drainage					12110 130th Lane NE	J1-029	J-2731	270	51	44	7	388	364	24	40.5	38.5	10.5	7	2	47	45	4	-1	7	2	-1	2%
450 Zone																																					
10	13-Jul	1:36 AM	5	11628 110th Ave NE	J3-008	J-241	27	820	Not necessary (over 8 psi drop)					11810 110th Ave NE	J3-009	J-91	260	76	67	9	436	437	-1	76.5	65.7	-0.5	9	10.8	-	-	-0.5	1.3	9	10.8	1.3	2%
11	13-Jul	12:36 PM	18	10822 117th Pl NE	I2-045	J-459	42	1,000	11030 116th Ave NE	I2-087	J-469	35	914	11021 116th Ave NE	I2-036	J-468	185	108	96	12	434	436	-2	108.7	99.6	-0.7	12	9.1	108.7	99.3	-0.7	-3.3	12	9.4	-3.3	3%
12	14-Jul	9:43 AM	5	515 8th St S	E3-012	J-1823	50	1,077	524 7th St S	E3-023	J-245	30	852	501 8th St S	E3-013	J-1824	211	96	77	19	433	427	6	93.3	75.3	2.7	19	18	-	-	2.7	1.7	19	18	1.7	2%
13	15-Jul	9:12 AM	3	10406 NE 55th St	C4-040	J-2425	33	875						5789 104th Ave NE	C4-039	J-2426	195	100	91	9	426	430	-4	101.8	93.4	-1.8	9	8.4	-	-	-1.8	-2.4	9	8.4	-2.4	3%
510 Zone																																					
14	15-Jul	12:05 PM	4	10640 NE 107th Pl	H2-008	J-809	30	852						11631 NE 106th	H2-007	J-810	259	104	62	42	499	489	10	99.7	60.3	4.3	42	39.4	103.5	64	0.5	-2	42	39.5	-2	3%
545 Zone																																					
15	14-Jul	8:20 AM	6	11105 127th Ave NE	I1-012	J-359	67	1,215	NE 112th and 1227th Pl NE	I1-014	J-248	70	1,238	11201 127th Ave NE	I1-013	J-358	302	102	84	18	538	543	-6	104.5	81.7	-2.5	18	22.8	-	-	-2.5	2.3	18	22.8	2.3	3%
16	14-Jul	8:57 AM	8	9051 132nd Ave	G1-019	J-915	55	1,121	9051 132nd Ave NE	G1-023	J-910	15	604	9051 132nd Ave NE	G1-018	J-913	352	80	77	3	537	541	-4	81.7	77.8	-1.7	3	3.9	-	-	-1.7	-0.8	3	3.9	-0.8	1%
17	14-Jul	1:58 AM	3	11318 NE 67th St	D3-034	J-2107	30	852						11328 NE 67th	D3-033	J-2106	345	81	67	14	532	536	-4	82.8	62.2	-1.8	14	20.6	82.8	62.8	-1.8	4.2	14	20	4.2	6%
18	15-Jul	8:49 AM	5	5220 111th Ave NE	C3-031	J-2363	17	660	Not necessary (over 8 psi drop)					4900 111th Ave NE	B3-006	J-2364	335	86	78	8	534	536	-2	86.9	83.3	-0.9	8	3.6	86.9	82.8	-0.9	-4.8	8	4.1	-4.8	6%
590 Zone																																					
19	14-Jul	1:36 AM	3	4916 119th Pl NE	B2-002	J-2318	18	660						11833 NE 48th Pl	B2-003	J-2316	419	71	58	13	583	575	8	67.5	63.6	3.5	13	3.9	71	61.7	0	-3.7	13	9.3	-3.7	6%
650 Zone																																					
20	14-Jul	12:37 PM	2	7605 130th Ave NE	E1-003	J-1692	32	875						12933 NE 77th Ct	E1-004	J-1690	462	80	74	6	647	655	-8	83.5	76.2	-3.5	6	7.3	-	-	-3.5	-2.2	6	7.3	-2.2	3%
21	14-Jul	1:00 AM	4	12236 NE 62nd St	D2-014	J-2184	12	550						12028 NE 62nd St	D2-018	J-2182	505	67	63	4	660	655	5	64.9	61.5	2.1	4	3.4	-	-	2.1	1.5	4	3.4	1.5	2%

APPENDIX Z

Agency Review Comments

RH2 ENGINEERS PLANNERS SCIENTISTS

RH2 ENGINEERING, INC.
www.rh2.com
mailbox@rh2.com
1.800.720.8052

WASHINGTON LOCATIONS

BOTHELL
MAIN OFFICE
22722 29th Drive SE, Suite 210
Bothell, WA 98021

BELLINGHAM

EAST WENATCHEE

ISSAQUAH

RICHLAND

TACOMA

OREGON LOCATIONS

NORTHERN OREGON
MAIN OFFICE
6500 SW Macadam Ave. Suite 125
Portland, OR 97239

SOUTHERN OREGON
Central Point

CENTRAL OREGON
Bend

March 4, 2015

Ms. Paige Igoe, P.E., Regional Engineer
State of Washington Department of Health
Northwest Drinking Water Regional Operations
20425 72nd Avenue S, Suite 310
Kent, WA 98032-2388

Sent via: *FEDEX*

Subject: City of Kirkland Comprehensive Water System Plan (14-0902)
Submittal of March 2015 Plan Supplements

Dear Ms. Igoe:

On behalf of the City of Kirkland (City), RH2 Engineering, Inc., (RH2) is submitting three copies of supplements and replacements for the City's Comprehensive Water System Plan (Plan). The Plan was originally submitted to your office on September 4, 2014, for review and comment. The review comments from you and Mr. Richard Rodriguez in a letter dated December 8, 2014, are addressed below.

General System Information

1. The capacities shown in Table 2-1 are physical capacities of the supply stations based on pump, pipe, and valve capacities. Exhibit II of the City of Seattle and Cascade Water Alliance Agreement (CWA) (note that Appendix C has been updated with the latest version of this contract) represents current contractual conditions, but the CWA has made a full supply commitment to the City. As mentioned in the February 17, 2015, letter from CWA to the City (now included in Appendix B), the Seattle contractual guarantee to CWA does not act as a limit to CWA's obligation to provide a full supply commitment.
2. Discussions regarding the 132nd Avenue NE intertie with the City of Bellevue (Bellevue) on page 2-14 and 2-19 have been updated to reflect that the interties have been approved by the Washington State Department of Health (DOH).
3. Page 2-15 was updated to reference the interlocal agreement for the Northshore Utility District intertie at NE Totem Lake Way and the agreement will supplement the other agreement in Appendix T.
4. The Woodinville emergency well discussion on page 2-19 was updated to state that the emergency well has not been approved by DOH.

Basic Planning Data

5. The basis for the peak hour demand/peak day demand factor of 1.8 is the highest recorded peak hour demand in 2004, as described in the City's previous Plan, and as updated on page 4-11 of this Plan.

6. The average day demand in Table 4-6 is based on 2009 data because that was the year of the City's most recent maximum day. Daily telemetry records were reviewed for 2008 to 2013 to determine the date of the City's most recent maximum day event (i.e., June 30, 2009). To obtain the maximum day demand/average day demand factor, the maximum day demand is compared to the average day demand for the same year.

Water Quality

7. A Coliform Monitoring Plan (CMP) for the City was provided in the second part of Appendix O after the Seattle Public Utilities Coliform Monitoring Plan. The City's CMP includes standard operating procedures and *E. coli* response procedures. A figure displaying the coliform sampling sites is included with the attached supplements for inclusion in Appendix O.
8. The City routinely measures chlorine residual in the 35 monthly coliform monitoring samples, as well as the Stage 2 sampling sites and the UCMR3 sites. The City also plans to take random chlorine samples throughout the eight pressure zones on a monthly basis. Page 6-13 was updated to include the average chlorine residual observed in the system (i.e., 0.95 to 0.98 milligrams per liter (mg/L).
9. The most current lead and copper monitoring, which was completed in 2014, is now included on page 6-13.
10. The City's Stage 2 Disinfection By-products Monitoring Plan is included in the supplemental Appendix X.

Water Use Efficiency

11. The adjusted distribution system leakage (DSL) is defined in footnote number 1 of Table 4-8. The DSL reported by the City in Plan Table 4-7 is for the direct water use or supply within the City's retail water service area. However, the City's annual Water Use Efficiency (WUE) reports also includes water supplied to The City of Redmond (Redmond) and Bellevue through the three joint use supply stations. For 2013, the total supply from the three supply stations was 1,911,255,000 gallons, per Table 4-3 of the Plan, which is equivalent to the "Total Water Produced and Purchased" on the 2013 WUE report. In 2013, the City utilized approximately 68.5 percent of the total supply to the three supply stations (i.e., 1,309,932,000 gallons, per Table 4-7 of the Plan). The Plan reports authorized consumption in Table 4-7 based on the consumption for the City's customer meters within the retail water service area. The City plans to submit future WUE reports that only reflect DSL for the City's direct water use.
12. A resolution for adoption of the City's WUE goals is not required since the goal setting process is handled by the CWA in accordance with discussions between the CWA and DOH in 2013. The City's goals are a percentage of the CWA goals, as described in Page 4-17 of the Plan.

System Analysis

13. The storage calculations provided in Table 7-4 are based on the analysis criteria for each individual component as explained on pages 7-7 through 7-9.
14. The capacities in Table 7-2 that are based on the maximum allowable water velocities through the piping and valves at each station are higher than the contractual values identified in Exhibit II of the City of Seattle (Seattle) and CWA Agreement in Appendix C. If the Exhibit II contract quantities,

which sum to a 9,860 gallons per minute, were utilized in Table 7-2, additional supply would be needed prior to 2025. However, as explained in response No. 1 of this letter, the Seattle contractual guarantee to CWA does not act as a limit to CWA's obligation to provide a full supply commitment to the City. CWA is committed to meeting the City's full demand needs in accordance with the Joint Agreement (Appendix B, also updated for this submittal).

15. For the purposes of this Plan, the existing hydraulic model was updated with all current pipes and facility settings as stated on page 7-13. The hydraulic model of the proposed system for 2020, 2025, and 2035 contains proposed system improvements that are scheduled to be completed by the specified year, as described on pages 7-15.
16. The supply stations were modeled as fixed grade nodes with a hydraulic grade line of 560 feet. Downstream of the supply station the pressure reducing valves PRVs have setpoints equivalent to the City-provided existing setpoints at each supply station. The setpoints are summarized in Table 7-6 of the Plan.
17. Calibration results are provided in supplemental Appendix Y and referenced in Chapter 7.
18. Representative nodes in Table 7-12 were selected to ensure that several nodes representing each of the City's pressure zones are included in the summary table. Derating the results to reflect a maximum water velocity of 8 feet per second ensures that fire flow availability is reported with velocities in the system at 8 feet per second or less, not including pipes at PRV stations and other facilities designed for higher velocities. The model was run with the velocity limitation.

Operations and Maintenance

19. DOH's address in Table 8-5 has been updated and included in the supplemental pages.

CIP

20. As-builts for the SS2 Upgrade project are provided on a CD that is enclosed with this letter.

Distribution Facilities Design and Construction Standards

21. Standard details W.08 and W.09 were updated per the review comments and the revised details are included in the supplemental pages.

Miscellaneous

22. The signed local government consistency form from the City Planning Department is provided in the supplements to replace the original Appendix I.
23. The King County Adoption Ordinance will be available after DOH approves the City's Plan. The ordinance will be forwarded to DOH upon completion.
24. The signed State Environmental Policy Act (SEPA) Checklist and SEPA Threshold Determination are included in the supplements for replacement of the original Appendix J.
25. The City presented the Plan to the City Council and the public at the October 7, 2014, Council meeting. The meeting agenda and public hearing information are enclosed with this letter.

26. The City Council will approve and adopt the Plan at the next possible Council meeting. Meeting minutes will be sent to DOH upon completion
27. Comments from adjacent purveyors and the City's responses are included in supplemental Appendix Z.

Comments were also received from Redmond and Bellevue based on their reviews of the Plan. These comments, as well as the associated revisions, are addressed in the supplements and replacement pages to the City's Plan enclosed in this letter. The City did not receive Plan review comments from Woodinville Water District, Northshore Utility District, or the CWA.

A few other plan modifications were made that were unrelated to review comments. The supply and storage tables in Chapter 7 and the associated text were updated with the demands as reported in Chapter 4 rather than the demands from the 2007 Plan. A joint-use project was added to Chapter 9 to reflect the minimum contracts heads in the most recent version of the CWA contract. Chapter 10 was also updated to ensure that the financial planning period aligned with the 6-year capital improvement planning period in Chapter 9. All of these revisions are reflected in the attached supplements.

In addition to the documents discussed above, we have enclosed three (3) copies of the updated title page, certification page, table of contents, binder cover, and edge to be inserted in the Plans that were previously submitted to your office. If this submittal of information meets your needs for Plan approval, we request on behalf of the City that the Plan be approved.

If you have any questions regarding this submittal, please contact me at (425) 951-5427.

Sincerely,

RH2 ENGINEERING, INC.

Kimberly Kuzak

Kimberly A. Kuzak, P.E.
Project Manager

KAK/jq/ms

Enclosures: Comprehensive Water System Plan Binder Cover Sheet, March 2015 (3 copies)
Comprehensive Water System Plan Binder Edge, March 2015 (3 copies)
Comprehensive Water System Plan Title Page, March 2015 (3 copies)
Comprehensive Water System Plan Certification Page, March 2015 (3 copies)
Comprehensive Water System Plan Table of Contents, March 2015 (3 copies)
Comprehensive Water System Plan Inserts, March 2015 (3 copies)
Public Hearing Attachment
CD with SS2 as-builts

cc: Mr. Greg Neumann, Water Manager, City of Kirkland

RH2 ENGINEERS PLANNERS SCIENTISTS

RH2 ENGINEERING, INC.
www.rh2.com
mailbox@rh2.com
1.800.720.8052

WASHINGTON LOCATIONS

BOTHELL
MAIN OFFICE
22722 29th Drive SE, Suite 210
Bothell, WA 98021

BELLINGHAM

EAST WENATCHEE

ISSAQUAH

RICHLAND

TACOMA

OREGON LOCATIONS

NORTHERN OREGON
MAIN OFFICE
6500 SW Macadam Ave. Suite 125
Portland, OR 97239

SOUTHERN OREGON
Central Point

CENTRAL OREGON
Bend

March 5, 2015

Mr. Jeff Thompson, P.E.
Senior Water/Wastewater Engineer
City of Redmond
P.O. Box 97010
Redmond, WA 98073-9710

Sent via: *US Mail*

Subject: City of Kirkland Comprehensive Water System Plan (14-0902)
Submittal of March 2015 Plan Supplements

Dear Mr. Thompson:

On behalf of the City of Kirkland (City), RH2 Engineering, Inc., (RH2) is submitting this response your review comments dated October 16, 2014. The City's Comprehensive Water System Plan (Plan) has been updated in accordance with review comments from the Washington Department of Health (DOH), City of Bellevue (Bellevue), and City of Redmond (Redmond). The revised Plan that was submitted to DOH on March 4, 2015, is enclosed.

1. ES-2: References to the City of Kirkland as a wholesale supplier have been removed.
2. Page 2-3: References to the City of Kirkland as a wholesale supplier have been removed.
3. Page 2-14: The City refers to these meters as master meters. A reference to Redmond's billing meters was added to the WSP.
4. Page 2-15: The reference to the Redmond 350 Zone was changed to the 335 Zone.
5. Page 2-15: Metered interties were changed to master meters.
6. Page 2-16: A reference to billing meters was added to page 2-16.
7. Figure 2-5: Figure 2-5 has been updated per your request.
8. Page 7-1: As noted in Table 7-2, Redmond's demands were updated to reflect the demands shown in Redmond's 2011 WSP.
9. Pages 7-3: References to the Redmond and Bellevue WSPs were updated.
10. Page 7-9, 7-11, and 7-12 regarding storage:

    Kirkland's storage calculations are based on a Redmond ownership percentage of 34.0 percent for the North Reservoir and 29.4 percent for the South Reservoir; it appears that the calculations in Table 9-5 of Redmond's WSP are based on percentages of 29.2 and 21.5 percent, respectively.

In 2012, the City's water system operation staff identified the operating range of the North and South Reservoirs as 10 and 7 feet, respectively, when the storage calculations were completed. These values differ from the 6- and 5-foot values presented in Table 9-5 of Redmond's WSP. The current 2015 operational levels are actually 8 and 6 feet per Steve Ensminger at the City and the storage tables in Chapter 7 have been updated to reflect these levels.

Redmond's WSP states that dead storage is not identified for the North Reservoir because pumps with backup power can supply the zone, and can therefore provide a minimum of 20 pounds per square inch (psi) at the highest service elevation (described on page 9-7 of the Redmond WSP). However, the pumping facility that would supply the north zone is Kirkland's 545 Zone booster pump station (BPS), which consists of only ibe pump, does not have a permanent generator, and is not programmed to automatically pump into the 450 Zone. For these reasons, dead storage will continue to be identified for the North Reservoir in the City's storage analyses.

For reasons similar to those described for dead storage, fire flow storage will continue to be identified for the South Reservoir in the City's storage analyses. Based on the maximum service elevation in the 545 Zone (435 feet in in City's service area) and the base elevation of the South Reservoir (495.08 feet), less than 30 psi is provided to the maximum service elevation when the South Reservoir is nearly empty, which contradicts footnote 3 in Table 9-5 of Redmond's WSP.

11. Page 7-13: The City's water model includes Redmond's pipes and the nodes were updated to include demands per Redmond's 2011 WSP.
12. Page 8-16: Laureling M. Ward's contact information was updated.
13. Page 9-4: Page 9-4 was updated to state that the joint-use project schedules will be determined by the Joint Use Board.
14. Table 9-4: The schedule is mentioned on Page 9-4.
15. Appendix B: Appendix B has been updated with the 2011 version of the Interlocal Contract.
16. Appendix C: Appendix C has been updated with the 2013 version of the Cascade Water Alliance (CWA) – Seattle contract.

The WSP has also been modified per comments from the DOH and other reviewing agencies. Furthermore, discussions with CWA in recent months and a review of the most recent contracts led to the addition of another joint use project that includes pump improvements at Supply Station S1 due to the minimum contract heads. The project will be coordinated with CWA, the City of Redmond, and the City of Bellevue to determine project necessity, scope, financial responsibility, and schedule as described in CIP J6 in Chapter 9 of the WSP. All modifications are described in Appendix Z and are reflected in the revised version of the WSP included with this letter.

If you have any questions regarding this response, please contact me at (425) 951-5427.

Sincerely,

RH2 ENGINEERING, INC.

Kimberly Kuzak

Kimberly A. Kuzak, P.E.
Project Manager

KAK/jq/ms

Enclosures: City of Kirkland Comprehensive Water System Plan, March 2015, CD (1 copy)

cc: Mr. Greg Neumann, Water Manager, City of Kirkland

RH2 ENGINEERS PLANNERS SCIENTISTS

RH2 ENGINEERING, INC.
www.rh2.com
mailbox@rh2.com
1.800.720.8052

WASHINGTON LOCATIONS

BOTHELL
MAIN OFFICE
22722 29th Drive SE, Suite 210
Bothell, WA 98021

BELLINGHAM

EAST WENATCHEE

ISSAQUAH

RICHLAND

TACOMA

OREGON LOCATIONS

NORTHERN OREGON
MAIN OFFICE
6500 SW Macadam Ave. Suite 125
Portland, OR 97239

SOUTHERN OREGON
Central Point

CENTRAL OREGON
Bend

March 5, 2015

Mr. Douglas Lane, P.E.
City of Bellevue
P.O. Box 90012
Bellevue, WA 90009-9012

Sent via: *US Mail*

Subject: City of Kirkland Comprehensive Water System Plan (14-0902)
Submittal of March 2015 Plan Supplements

Dear Mr. Lane:

On behalf of the City of Kirkland (City), RH2 Engineering, Inc., (RH2) is responding to your review comments dated October 9, 2014. The City's Comprehensive Water System Plan (WSP) has been updated in accordance with review comments from the Washington State Department of Health (DOH), City of Bellevue (Bellevue), and City of Redmond (Redmond). The revised WSP that was submitted to DOH on March 4, 2015, is attached.

1. Page 2-3: The reference to Kirkland as wholesale water provider has been removed.
2. Page 2-5: Comment noted.
3. Page 2-6:
   - The Cedar/Tolt operation description was updated to be consistent with Chapter 6.
   - Table 2-1 was updated to include the inlet names as noted in the Rose Hill Agreement and Exhibit II of the CWA agreement. The table was also updated with all of the ownership percentages and meter sizes.
4. Page 2-14:
   - The hydraulic grade line for the emergency intertie on 132nd Avenue was updated.
   - The sentence regarding DOH approval was deleted.
   - Page 2-19 was also updated to accurately describe the emergency intertie.
5. Page 2-16:
   - The increase in demand was modified to 20 percent for consistency with the storage calculations.
   - The meter size was updated.

- The 3,500 gpm capacity may have been the capacity of an 8-inch meter. The actual source of the information was not available and the chapter was updated to reflect what is known at this time regarding the capacity.

6. Page 2-18: The description for the Bellevue system has been updated.
7. Table 7-2:
    - Page 2-16 was updated to be consistent with Table 7-2.
    - The note regarding Bellevue's build-out demand was updated from 2010 to 2020.
8. Appendices:
    - Appendix B has been updated to reflect the 2011 version of the Interlocal Agreement and Appendix C has been updated to reflect the 2013 version of the Seattle-Cascade Agreement.
    - Appendix H was updated to include the agreement for the 132nd Avenue NE intertie.
9. General Comments:
    - Storage capacity comment noted.
    - Sheffield Green development and All Saints Lutheran Church comment noted.

The WSP has also been modified per comments from the DOH and other reviewing agencies. Furthermore, discussions with CWA in recent months and a review of the most recent contracts led to the addition of another joint use project that includes pump improvements at Supply Station S1 due to the minimum contract heads. The project will be coordinated with CWA, Redmond, and Bellevue to determine project necessity, scope, financial responsibility, and schedule as described in CIP J6 in Chapter 9 of the WSP. The modifications are described in Appendix Z and are reflected in the copies of the WSP included with this letter.

If you have any questions regarding this response, please contact me at (425) 951-5427.

Sincerely,

RH2 ENGINEERING, INC.

Kimberly Kuzak

Kimberly A. Kuzak, P.E.
Project Manager

KAK/jq/ms

Enclosures: City of Kirkland Comprehensive Water System Plan, March 2015, CD (1 copy)

cc: Mr. Greg Neumann, Water Manager, City of Kirkland

RH2 ENGINEERS PLANNERS SCIENTISTS

RH2 ENGINEERING, INC.
www.rh2.com
mailbox@rh2.com
1.800.720.8052

WASHINGTON LOCATIONS

BOTHELL
MAIN OFFICE
22722 29th Drive SE, Suite 210
Bothell, WA 98021

BELLINGHAM

EAST WENATCHEE

ISSAQUAH

RICHLAND

TACOMA

OREGON LOCATIONS

NORTHERN OREGON
MAIN OFFICE
6500 SW Macadam Ave. Suite 125
Portland, OR 97239

SOUTHERN OREGON
Central Point

CENTRAL OREGON
Bend

March 5, 2015

Mr. Steve Hirschey
King County Water Quality Planner
DNRP/WTD/PIM3 – Comprehensive Planning
King Street Center
201 S Jackson Street, Room 512
Seattle, WA 98104

Sent via: *US Mail*

Subject: City of Kirkland Comprehensive Water System Plan (14-0902)
Submittal of March 2015 Plan Supplements

Dear Mr. Lane:

On behalf of the City of Kirkland (City), RH2 Engineering, Inc., (RH2) is transmitting two (2) hard copies of the March 2015 Comprehensive Water System Plan (WSP) supplements and one (1) CD of the City's March 2015 WSP. The City's WSP has been updated in accordance with review comments from the Washington State Department of Health (DOH), City of Bellevue, and City of Redmond, and was submitted to DOH on March 4, 2015. When the City has received final approval, the notification will be forwarded to you for use in securing King County Council approval.

If you have any questions regarding this response, please contact me at (425) 951-5427.

Sincerely,

RH2 ENGINEERING, INC.

Kimberly Kuzak

Kimberly A. Kuzak, P.E.
Project Manager

KAK/jq/ms

Enclosures: City of Kirkland Comprehensive Water System Plan supplements, March 2015 (2 copies)
City of Kirkland Comprehensive Water System Plan, March 2015, CD (1 copy)

cc: Mr. Greg Neumann, Water Manager, City of Kirkland

STATE OF WASHINGTON
DEPARTMENT OF HEALTH
NORTHWEST DRINKING WATER REGIONAL OPERATIONS
20425 72nd Avenue South, Suite 310, Kent Washington 98032-2388

December 8, 2014

RECEIVED BOTHELL
RH2 ENGINEERING INC.
JOB NO:

GREG NEUMANN, WATER MANAGER
KIRKLAND, CITY OF
123 FIFTH AVE
KIRKLAND WA 98033

DEC 11 2014

ROUTE TO: mc
FILE:

RE: Kirkland, City of Water System, ID #42250T
King County
2014 Comprehensive Water System Plan – Review Comments
Submittal #: 14-0902

Dear Greg:

Thank you for submitting the Water System Plan (WSP) for the City of Kirkland (the City) received in this office on September 4, 2014. We have reviewed the plan and offer the following comments. These comments must be adequately addressed prior to approval of the WSP.

General System Information

1. The capacity of the Seattle inlets shown in Exhibit II of the SPU Contract with Cascade Water Alliance (Appendix C) does not match the capacity shown in Table 2-1. Please clarify.
2. The 132nd Ave NE Intertie with Bellevue discussed on page 2-14 and 2-18 has been approved and all required documentation has been received and acknowledged by DOH. Please edit the text.
3. Please provide the signed agreement for the for the Northshore Utility District (NUD) intertie (mentioned on page 2-15) at NE Totem Lake Way dead end when it is complete.
4. The Woodinville emergency well discussed on page 2-19 has not been approved for use by DOH as of the writing of this letter.

Basic Planning Data

5. Describe in the text the basis for the PHD:PDD peaking factor of 1.8.

6. In Table 4-6, why is the average day demand based on 2009 data? Is it possible to use more recent data?

Water Quality

7. Every water system is required to prepare a coliform monitoring plan (CMP) for their distribution system. SPU may collect routine samples, but Kirkland staff is required to take repeat samples within their distribution system. You must identify the repeat samples and your staff must be trained in how to collect coliform samples. Please provide the following:
   - A CMP for the City of Kirkland which includes a map of the routine and repeat sampling location. A template is available on our website: http://www.doh.wa.gov/CommunityandEnvironment/DrinkingWater/Contaminants/Coliform/PreparingaColiformMonitoringPlan/LargeorMultipleSource
   - Standard operating procedures (SOPs) for coliform sampling
   - *E.coli* response plan for how the City would implement a boil water advisory in the event of an acute MCL violation
8. On Page 6-13, it states the chlorine residual in the City's distribution system is between 0.2 and 4.0 mg/L. What monitoring does the City conduct to measure residual in the distribution system? Provide the average residual observed in the system.
9. Please provide the most current results for lead and copper sampling conducted in the City's distribution system.
10. Please provide the Stage 2 DBP Monitoring Plan for the City's system.

Water Use Efficiency

11. In Table 4-8, what is the definition of adjusted DSL? Please reconcile the DSL information provided in the WSP with the annual WUE reports submitted to DOH.
12. Provide a resolution for adoption of the City's water use efficiency goal that was introduced in a public forum.

System Analysis

13. Please provide more detail on how equalizing, operating and standby storage components were calculated for the storage analysis included in Table 7-4.
14. It is noted in Table 7-2 that the capacities of the inlets are based on the maximum allowable water velocities through the piping and valves at the stations. How does this compare with the values specified in the SPU contract? How would the supply analysis result change if the contract values were used?
15. Was the model updated for the analysis shown to incorporate any upgrades in pipe size or changes in operation/controls?
16. Please describe how the SPU inlets were modeled for the system analysis.
17. Please include a summary of calibration results (as noted on Page 7-17) in an appendix.

18. The text says that Table 7-12 presents a summary of representative system nodes. How were these nodes selected? What does it mean to derate the results to reflect a maximum water velocity of 8 feet per second? Was the model run with this velocity limitation?

Operations and Maintenance

19. Please update the DOH mailing address in Table 8-3.

CIP

20. Submittal of a project report and construction documents for review and approval are required for water system projects including upgrades to the SPU inlet stations and recoating of reservoirs. Please submit as built documentation of the SS2 Upgrade project. If you have questions regarding what projects need to be submitted, please give me a call and we can discuss the requirements.

Distribution Facilities Design and Construction Standards

21. Recommend you reconfigure details W.08 and W.09 to eliminate the drain hole on the vent for the valve assembly. When would you have water in this vent? Recommend you eliminate the drain to prevent potential contamination from entering your distribution system.

Miscellaneous

22. Provide a signed determination of local government consistency from the City of Kirkland Planning Department.
23. Provide an Adoption Ordinance for your WSP from King County, if the City provides water service in unincorporated King County.
24. Provide signed SEPA Checklist and a SEPA Threshold Determination with the final WSP submittal.
25. The water system must meet the consumer input process outlined in WAC 246-290-100(8). Please include documentation of a consumer meeting discussing the WSP, prior to DOH approval of the WSP.
26. Prior to DOH approval, the City's governing body must approve and adopt the WSP. This is a new requirement resulting from the Municipal Water Legislation.
27. Please provide copies of any comments made by adjacent purveyors or other interested parties along with the City's response to those comments.

We hope that you have found these comments to be clear, constructive and helpful in the development of your final draft WSP. We ask that you submit the revised WSP on or before **March 5, 2015**. In order to expedite the review of your revised submittal, please include a cover letter summarizing how each of the above comments was addressed in the revised WSP and where each response is located (i.e., page numbers, Appendices, etc.)

Regulations establishing a schedule of fees for review of planning, engineering, and construction documents have been adopted (WAC 246-290-990). Please note that we have included an invoice in the amount of $5,484.00 for the review of the Water System Plan. This fee covers our current review and one more submittal for this project. If additional submittals are required, then an invoice for additional fees will be included with our final approval letter. Please remit your complete payment in the form of a check or money order within thirty days of the date of this letter to: **WSDOH, Revenue Section, PO Box 1099, Olympia WA 99507-1099.**

Thank you again for submitting your draft Water System Plan for our review. If you have any comments or questions concerning our review, please contact either of us.

Sincerely,

Richard Rodriguez
Regional Planner
(253) 395-6771

Paige Igoe, PE
Regional Engineer
(253 395-6764)

Enclosure (invoice)

cc: Public Health – Seattle & King County
Steve Hirschey, King County UTRC
Jerry Liszak – WSDOE, NWRO
Michele Campbell, PE, RH2 Engineering, Inc.
Joan Kersnar, PE, Seattle Public Utilities

King County

Utilities Technical Review Committee
Department of Natural Resources and Parks
King Street Center
210 South Jackson Street, Suite 512
Seattle, WA 98104-3855
www.kingcounty.gov

November 20, 2014

Ray Steiger, P.E.
Public Works Director
City of Kirkland
123 Fifth Avenue
Kirkland, WA 98033

Dear Mr. Steiger:

Thank you for submitting the City of Kirkland Comprehensive Water Plan (Plan) for King County approval. The Plan was received on September 8, 2014. In accordance with King County Code (KCC) 13.24 the King County Utilities Technical Review Committee (UTRC) has reviewed the Plan for consistency with the King County Comprehensive Plan and KCC.

In reviewing the Plan, the UTRC found that the Plan is largely consistent with the County's comprehensive plan and code. However, it is necessary to complete and include the King County reclaimed water checklist (attached) in the plan before the UTRC can make a recommendation to the King County Council for approval of the City's Plan.

Often times the construction and/or maintenance of utility lines requires work within the road right-of-way (ROW) for roads in unincorporated King County. When a utility has a proposed project within unincorporated King County, please contact the King County Department of Transportation (KCDOT), Road Services Division, Engineering Services Section for coordination with the County's annual overlay program. Failure to do so may result in the denial of the permit to work within the ROW once an overlay of the road section has been completed. Although each utility has a set of construction standards and specifications for their projects, when construction and or maintenance of utilities requires work within the road ROW for roads in unincorporated King County, please be aware that the current edition of the King County Road and Construction standards apply to any installation or work in these ROWs. Not adhering to these standards could result in the installation of non-specified and approved methods and/or materials that are out of the specifications for King County, and could potentially add additional costs to the purveyor for future repairs or adversely affect acceptance of those repairs/installations. The KCDOT- 2007 King County Road Design and Construction

Standards can be found on the World Wide Web at http://www.kingcounty.gov/transportation/kcdot/Roads/EngineeringServices/RoadStandards2007.aspx

We look forward to seeing the final Plan and working with you to secure the King County Council's approval. The Council's action represents King County's final action on the Plan and is the statement of consistency under the Revised Code of Washington 43.20.260.

Finally and somewhat related to the water plan, our understanding is that the City has no water franchise for service in the County. My colleague in the Facilities Management Division, Real Estate Services will be contacting the City to discuss a water franchise.

If you have any questions or concerns about any of the information in the letter, please do not hesitate to call me at 206-477-5387.

Sincerely,

Stephen Hirschey
Chair, Utilities Technical Review Committee

Enclosure

cc: Richard Rodriguez, Regional Planner, Washington State Department of Health

City of Bellevue

Post Office Box 90012 • Bellevue, Washington • 98009 9012

October 9, 2014

Michele Campbell, P.E.
Project Manager
RH2 Engineering, Inc.
22722 29th Drive SE, Suite 210
Bothell, WA 98021

Dear Michele:

Thank you for the opportunity to review the draft City of Kirkland Comprehensive Water System Plan. We focused our review primarily on the parts of the plan that deal with the physical connections between our systems, or information about Bellevue and our systems. If any are not clear, please call me so we can discuss them further. I would be happy to meet with you to provide more information, if you like.

Bellevue's comments on the Plan are as follows:

Page 2-3: Is it accurate to say that Kirkland is the wholesale water purveyor to Rose Hill areas (isn't that Cascade/SPU)? Would it be more accurate to say that Kirkland wheels water to those customers?

Page 2-5: The 2nd paragraph provides a range of elevations in the shared 545 Zone. Bellevue's portion of the zone appears to fall inside this range. A cursory review of our model elevations indicates elevation 287 to 405.

Page 2-6:

- Talk with SPU about Cedar/Tolt operation. I don't think the CESSL is used to boost TESSL pressure during high demand as indicated, but may be generally only used in case of a Tolt shutdown (planned or unplanned). Consequently, this might be more likely to occur during low demands. The description of Cedar/Tolt operation in Chapter 6 is different and more consistent with my understanding.
- The joint-use inlets are given different names (S1, S2, S3) and show different meter sizes in the Plan than in the Rose Hill Agreement. It is not clear which one is which and if Bellevue would share costs for improvements. Please clarify.

Page 2-14: In the last paragraph, regarding the emergency intertie on 132nd Ave:

- The PRV is set to open at an HGL of approximately 628 (not 650) in Bellevue's Pikes Peak 670 Zone.
- DOH has approved the intertie (delete last sentence).
- The same comments apply to the second paragraph on Page 2-19.

Page 2-16: In the first paragraph, regarding the metered Kirkland-Bellevue intertie:

- Bellevue hasn't projected future demands for the Kirkland intertie specifically. I can't vouch for the 50% number. This intertie primarily feeds Bellevue's RH545 zone (about 25%-30% increase projected through 2040), but it also serves as a backup feed to the larger LH520 zone.
- The meter size is 6".
- The 3,500 gpm capacity sounds high. It's not clear whether this refers to the meter's accuracy range, actual capacity based on hydraulics, or something else.

Page 2-18: Description of Bellevue's system:

- Bellevue's service area is not confined to the municipal boundaries of Bellevue as indicated. Bellevue's direct retail service area (not wheeled) includes a portion of Kirkland in the vicinity of 116th Ave NE and NE 41st St (as shown in Figure 2-1) in addition to the entire cities of Clyde Hill and Medina, the towns of Hunts Point and Yarrow Point, and small portions of the City of Issaquah and unincorporated King County. Bellevue also wheels water to a separate portion of Issaquah on Cougar Mountain, the Overlake area of Redmond, and the Village of Beaux Arts through an emergency intertie (when demand exceed their well capacity).

Table 7-2:

- Page 2-16 says Bellevue demand will increase 50%, but this table only shows a 20% increase and then buildout.
- Note 2: Is the intent to say 2020 (not 2010)?

Appendixes:

- The SPU-Cascade agreement has been updated since the version in the Plan.
- The Kirkland-Bellevue agreement for the intertie on 132nd Ave NE is not included in the appendices. Attached is a copy.

General comments:

- The volume of Kirkland's South Reservoir available to Bellevue (1.5 MG) is adequate to meet projected buildout for our zone relying on this storage (RH545).
- The Sheffield Green development and All Saints Lutheran Church west of 148th Ave NE in Bellevue are "direct read" customers served directly by Kirkland's 545 zone (not through the master meter), separate from Bellevue's RH545 zone.

When the plan is complete, please provide (3) hard copies of the final plan (if available) to my attention at Bellevue Utilities. Again, please call if you have any questions. I hope this information is helpful.

Douglas Lane, PE
(425)452-6865
dlane@bellevuewa.gov

CityofRedmond
WASHINGTON

RECEIVED BOTHELL
RH2 ENGINEERING INC.
JOB NO:

OCT 18 2014

ROUTE TO: mc
FILE:

October 16, 2014

Ms. Michele Campbell, P.E.
RH2 Engineering, Inc.
22722 29th Drive S. E., Suite 210
Bothell, WA 98021

Subject: City of Kirkland 2014 Comprehensive Water System Plan
City of Redmond Comments

Dear Ms. Campbell:

The City of Redmond has reviewed and made comments on the 2014 City of Kirkland Comprehensive Water System Plan. Enclosed is a summary sheet of Redmond's comments, along with copies of the commented pages of the plan. Please call me at 425-556-2884 or email me at jthompson@redmond.gov with any questions regarding our comments. Also, please feel free to request a meeting to go over Redmond's comments in person. Thanks!

Sincerely,

Jeff Thompson

Jeff Thompson, P.E.
Senior Water/Wastewater Engineer

Enclosures: Comment Summary Sheet
Plan Pages with Comments

cc: Ms. Paige Igoe, P.E., Regional Engineer, DOH

City of Redmond Comment Summary Sheet

Page ES-2, 1st Paragraph, 4th Sentence: Kirkland is not a wholesaler of water to Redmond and Bellevue. CWA is the wholesaler, and Kirkland, Redmond, & Bellevue are joint owners of the supply stations.

Page 2-3, 5th Paragraph, 3rd Sentence: The Seattle contract is no longer valid, only the CWA contracts are valid. Therefore, Kirkland is not a water wholesaler to Redmond & Bellevue. (Redmond can meet with Kirkland & RH2 to discuss and show how Redmond's WSP explains this relationship.)

Page 2-14, 2nd Paragraph, 1st Sentence: These Redmond meters are not "Master Meters". They only measure water from one side of Redmond going to the other side of Redmond. They are billing meters.

Page 2-15, 3rd Paragraph, 1st Sentence: Same comment as above. Also, the end of the 1st sentence should read "Redmond's 335 Zone." (not 350 Zone)

Page 2-15, 4th & 5th Paragraphs: Change each "intertie" to "meter"

Page 2-16, 3rd Paragraph, 1st Sentence: Change "Redmond master meters" to "Redmond billing meters"

Figure 2-5: The Redmond Service Area is incorrect. Please see mark-ups.

Page 7-1, 1st Paragraph: What about Redmond's demands that receive water through Kirkland? Kirkland needs to get copies of both Redmond's and Bellevue's water models for their system evaluation including storage evaluation.

Page 7-3, 2nd Paragraph, last Sentence: Delete "Draft" after Redmond's 2011. Also, Does Bellevue have a more recent WSP than 1998 for Kirkland to use?

Page 7-9, Last Paragraph: Storage Evaluation is not calculated correctly. Redmond owns 34% of North tank and 29.4% of South tank top to bottom.

Page 7-11, Table 7-4: Operational & Fire Flow storage is shared. Also, see comment above.

Page 7-12, Table 7-5: See last 2 comments above.

Page 7-13, 3rd Paragraph: Need to include Redmond's water model to make sure shared facilities are adequate.

Page 8-16, Table 8-5: Laureling M. Ward's contact phone #s are 425-556-2819 & 360-271-4168 (not 425-444-2639)

Page 9-4, 4th Paragraph: Joint Board should decide project schedule for these projects.

Table 9-4, last section: Joint Board should decide when these projects should be scheduled.

Appendix B: The Interlocal Contract (December 15, 2004) is outdated. Most recent contract was voted on 10/26/2011.

Appendix C: The CWA – Seattle contract (10-2-2003) is outdated. Latest contract is dated July 15, 2013.

Plan Pages with Comments

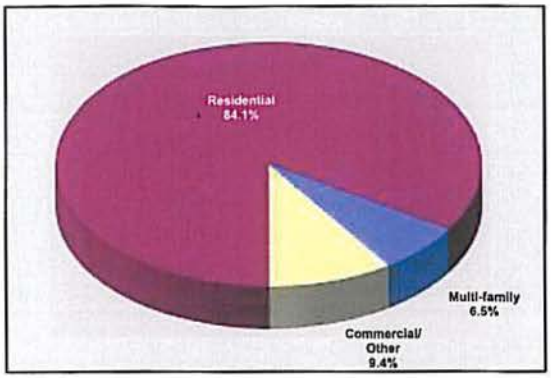

2013 Water Connections

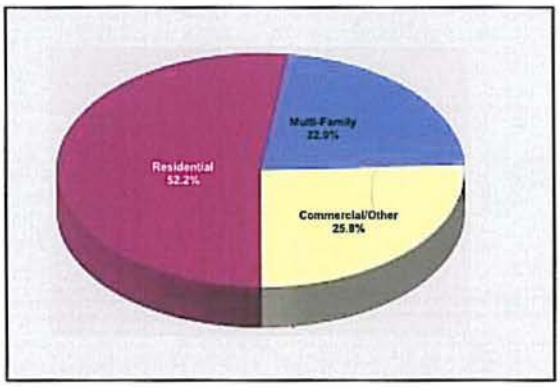

2013 Water Consumption

The City also operates several joint-use facilities that provide supply to areas of the City of Redmond (Redmond) and the City of Bellevue (Bellevue). All three cities are proportionally responsible for the cost of maintaining and operating the joint use facilities. This arrangement was agreed to during the Rose Hill Water District assumption in 1994. Under the assumption agreement, the City became a wholesaler of water to both Redmond and Bellevue. The areas of Bellevue and Redmond supplied by the joint-use facilities are all within the area served previously by the Rose Hill Water District. Under the agreement, the City is only required to supply a rate of supply proportional to each City's percent ownership in each joint-use supply facility as described in the assumption.

KIRKLAND IS NOT A WHOLESALER - REDMOND & BELLEVUE ARE JOINT OWNERS

Past Water Usage and Conservation

Total system-wide water usage has decreased approximately 5 percent from 2005 to 2013, primarily due to water use efficiency practices and an increase in the number of homes with water-efficient plumbing. During this same time period, the average amount of water demand per person has decreased from approximately 108 gallons per day in 2005 to approximately 89 gallons per day in 2013. The City's average per capita demand of 95 gallons per day from 2007 through 2013 and average demand per equivalent residential unit (ERU) of 189 gallons per day are slightly less than the average for the Puget Sound area. The amount of distribution system leakage in the City's system was 6 percent in 2013 based on a 3-year rolling average, which is below the standard established by the WUE Rule of 10 percent or less. The City's WUE Program presents a goal of saving 53,000 gallons per day annually from 2014 through 2019, based on the City's portion of Cascade Water Alliance's (Cascade) regional goal. Beyond 2020, the demand projections with WUE do not include additional water savings beyond the initial goal.

Future Water Demands and Water Supply

Overall water demand within the City's system is estimated to increase by up to 15 percent within the next 6 years and by up to 33 percent within the next 20 years, depending on future water use reductions due to the City's WUE Program and the rate at which growth actually occurs in the system. The City currently anticipates using its 3 existing Tolt Pipeline connections to meet the demand requirements of the system through the 20-year planning period. The capacity of these

WATER SERVICE AGREEMENTS

Water Service Area Agreement

All purveyors located within the East King County Critical Water Supply Service Area are required to have an agreement that identifies the external boundary of their water service area. The City updated its water service area agreement in 1997 as part of the 1996 East King County Coordinated Water System Plan Update. A copy of this agreement is contained in **Appendix A**.

Cascade Interlocal Contract and Declining Block Agreement

The City is a Cascade member. The Interlocal Contract between the City and Cascade, included in **Appendix B**, states that Cascade will provide a full supply commitment to the City for current and future water supply needs. Cascade shall provide for the necessary water system expansions and extensions to meet the needs of additional water customers of Cascade Members if the growth is consistent with applicable growth management plans.

In December 2003, Cascade signed a 50-year declining block agreement with the City of Seattle (Seattle). The City relinquished its individual contract with Seattle in favor of a contract between Cascade and Seattle. The agreement requires Seattle to provide water to Cascade through December 31, 2053, in decreasing amounts. In 2008, Cascade and Seattle approved amendments to the 50-year declining block agreement. The amended agreement increased the block of water Cascade is obligated to purchase by 3 million gallons from 2009 to 2017, and 5 million gallons from 2018 to 2023. In October 2005, Cascade signed a supply agreement with Tacoma Public Utilities to provide additional supply to its members. It is the intent of Cascade to continue to procure other sources of water as time progresses to meet the demands of its members. Water will continue to be provided to the City from the existing supply stations. A copy of Cascade's contract with Seattle is contained in **Appendix C**. A copy of Cascade's contract with Tacoma Public Utilities is also contained in **Appendix C**.

Joint-use Agreement

The City, Redmond, and Bellevue share several joint-use facilities that include the 3 supply stations, a 14.3 MG reservoir, an 11.2 MG reservoir, 2 booster pump stations, 4 normal supply interties, pressure reducing stations, and several transmission mains. The City provides all operations, maintenance and control of the joint-use facilities in accordance with the *Interlocal Operation and Maintenance Agreement*, which is included in **Appendix D**.

Water supply is provided to the City by Cascade through Seattle's pipelines. The same three supply stations that provide supply to Kirkland also provide supply to Redmond and Bellevue customers located within the boundaries of the former Rose Hill Water District. Since the Seattle Water Purveyor Contract was assigned to the City as part of the Rose Hill Assumption, the City is the wholesale purveyor of water to these areas of the Cities of Redmond and Bellevue. Cascade bills the City for water supplied to the three cities through Supply Stations S1, S2, and S3, and the City in turn bills Redmond and Bellevue for their consumed portion of the total water supply. Per the Joint-use Agreement each city also holds a seat on the Joint Board, which was established to ensure the joint facilities are operated and maintained in a manner that is satisfactory to each city. The Joint Board meets on a regular basis to discuss issues pertaining to the joint facilities owned by the board members. Currently, the ownership of Supply Station S1 is 57.2 percent by Kirkland, 29.4 percent to

SEATTLE CONTRACT NO LONGER VALID, ONLY CWA CONTRACTS VALID. THEREFORE, KIRKLAND IS NOT A WHOLESALER TO REDMOND & BELLEVUE.

REDMOND CAN MEET WITH KIRKLAND & RH2 TO DISCUSS AND SHOW HOW REDMOND'S WSP EXPLAINS THIS RELATIO

Redmond and 13.4 percent to Bellevue. The ownership of Supply Station S2 is 66 percent to Kirkland and 34 percent to Redmond. The ownership of Supply Station S3 is also 66 percent to Kirkland and 34 percent to Redmond. Each city reads customer meters within their respective service area.

SATELLITE SYSTEM MANAGEMENT

A Satellite System Management Agency (SSMA) is defined as a person or entity that is certified by the Washington State Department of Health (DOH) to own or operate more than one public water system without the necessity for a physical connection between such systems. SSMAs were created to stop the proliferation of small water systems, many of which could not meet federal and state water quality and water system planning regulations. Based on the success of SSMAs, DOH made recommendations to the legislature to include rules for designating entities as qualified SSMAs.

In July 1995, Senate Bill 5448 became law, governing approval of new water systems and setting forth requirements for SSMAs. The goal of the law is to ensure that the people of Washington State will receive safe and reliable water supplies in the future from professionally managed or properly operated water systems. SSMAs can provide three different levels of service:

1. Ownership of the satellite system;
2. Operations and management of the satellite system; or
3. Contract services only.

The service can be provided to new systems, existing systems that are no longer viable, or existing systems placed into receivership status by DOH.

The City is responsible for providing water service to all customers in the City's water service area defined in the East King County Coordinated Water System Plan. Currently, no small water systems exist within the City's water service area. All of the areas surrounding the City's service area are currently being served by large, stable water systems that are unlikely to be future satellite water systems operated by the City.

In the event that a neighboring water system needs the City's assistance, the City will cooperate to provide the necessary satellite management services. Upon agreement between the two systems, the City will pursue the necessary steps to become an approved SSMA. These include:

- Submitting a notice of intent to the DOH;
- Participating in a pre-submittal meeting with the DOH;
- Submitting a SSMA plan to the DOH that meets the plan requirements; and
- Obtaining approval of the plan from the DOH.

INVENTORY OF EXISTING WATER FACILITIES

This section provides a detailed description of the existing water system and the current operation of the facilities. The analysis of the existing water facilities is presented in **Chapter 7**. Additional information on the City's existing water system facilities is included in **Appendix E** and on the DOH Water Facilities Inventory (WFI) form in **Appendix F**.

stations serve the 395 Zone from the 450 Zone, and one pressure reducing station serves the 395 Zone from the 545 Zone. Three pressure reducing stations serve the 315 Zone from the 450 Zone, while the 285 Zone is served by nine pressure reducing stations from the 450 Zone and by two pressure reducing stations from the 315 Zone. The 285 Zone in the Totem Valley assumption area is served by two pressure reducing stations from the 395 Zone. All of the City's pressure reducing stations are located in underground vaults. Fifteen of the City's pressure reducing stations are equipped with pressure relief valves. All of the pressure zones supplied by pressure reducing stations have pressure relief capabilities, with the exceptions of the City's 510 Zone and 590 Zone. A list of all pressure reducing stations and related data is contained in **Appendix E**.

Master Meters

The City's water system has a total of eight master meters (not including the meter at each supply station), four of which the City operates. Three of the master meters are operated by Redmond (R1, R3, and R4) and the remaining master meter (B1) is operated by Bellevue. The master meters operated by the City are K1, K2, K3, and K4, as shown in plan view in **Figure 2-1** and in profile view in **Figures 2-2A** and **2-2B**. The City's master meters are located along the I-405 corridor at each of the four freeway crossings of the transmission mains and measure flow entering the City's system on the west side of I-405.

THESE REDMOND METERS ARE NOT "MASTER METERS". THEY ONLY MEASURE WATER FROM ONE SIDE OF REDMOND GOING TO THE OTHER SIDE OF REDMOND.

Water System Interties

Water system interties are physical connections between two adjacent water systems. Interties are normally separated by a closed isolation valve or control valve. Emergency supply interties provide water from one system to another during emergency situations only. An emergency situation may occur when a water system loses its main source of supply or a major transmission main, or during firefighting situations, and is unable to provide a sufficient quantity of water to its customers. Normal supply interties provide water from one system to another during non-emergency situations and are typically supplying water at all times.

Emergency Supply Interties

The City's water system has two emergency interties with Bellevue. One intertie with Bellevue is at approximately NE Northup Way and 104th Avenue NE, as shown in **Figure 2-1**. The intertie connects Kirkland's 285 Zone with Bellevue's 400 Zone. The emergency intertie consists of an 8-inch isolation valve that is normally closed and must be manually opened to flow water. Due to the difference in hydraulic elevation of the two pressure zones, the emergency intertie will only flow water into the City's system. Since the water from Bellevue's 400 Zone is approximately 49 pounds per square inch (psi) higher than the water in the City's 285 Zone, the 285 Zone could be over-pressurized, causing one of the pressure relief valves in the 285 Zone to open and discharge water if the intertie is opened too much. Because there is no means of moving water from the 285 Zone to the upper zones in the City's water system, the benefits of this intertie are limited to emergency supply for the 285 Zone only.

The second intertie with Bellevue is at the intersection of 132nd Avenue NE and NE 60th Street. The purpose of this intertie is to provide fire flow to Bellevue's service area in the event of an emergency. The intertie is controlled with a pressure reducing valve that will only open when pressure on Bellevue's side of the valve drops below a gradient of 650 feet. Construction of the intertie was completed in the summer of 2012 and is currently operational. Bellevue has not completed final application and approval of the intertie with DOH.

The City also has two existing emergency interties with NUD in the Totem Lake area, as shown in **Figure 2-1**. One intertie is located at the NE Totem Lake Way dead end, and connects NUD's 380 Pressure Zone to the City's 395 Pressure Zone. NUD and the City are currently in the process of finalizing a formal agreement for this intertie which will require that either party notify the other at least 12 hours prior to receiving water through the intertie. The intertie is capable of supplying either water system in an emergency.

A second intertie with NUD, located at approximately NE 118th Street and 115th Avenue NE, was constructed in 2012 and connects NUD's 366 Pressure Zone to the City's 450 Pressure Zone. The intertie consists of an 8-inch-diameter water main, a fire hydrant, and two normally closed valves, and is capable of supplying the City or NUD in an emergency. The agreed operation of the emergency intertie is contained in the *Interlocal Agreement with Northshore Utility District*, a copy of which is contained in **Appendix T** of this WSP.

~~Metered Interties (Master Meters)~~ BILLING METERS

THESE ARE NOT "INTERTIES" OR "MASTER METERS", THEY ARE "BILLING METERS".

Redmond has three metered interties along the Sammamish River that supply water from the Redmond service area of the Kirkland/Redmond/Bellevue supply system west of the river to Redmond's well service area east of the river during periods of high demand. Meter station R1, located at NE 51st Street and West Lake Sammamish Parkway NE, is in Redmond's ~~350~~ 335 Zone. The station has a 6-inch meter and 8-inch supply-side water main with an estimated capacity of approximately 1,600 gpm. Meter station R3, located at Leary Way NE east of the Sammamish River, is in Redmond's 285 Zone. The station has an 8-inch meter and 8-inch supply-side water main with an estimated capacity of approximately 1,600 gpm. Meter station R4, located at NE 85th Street west of the Sammamish River, is in Redmond's 285 Zone. The station has an 8-inch meter and 12-inch supply-side water main with an estimated capacity of approximately 3,500 gpm. The estimated capacities of these meter stations are based on the maximum carrying capacity of the supply-side water mains and not the entire system's capability to provide these flow rates. Therefore, the actual capacities may be less and will most likely vary throughout the year as demands in the Kirkland/Redmond/Bellevue supply area vary. The City provides direct water supply to Redmond water service customers located between the City's system and the Redmond ~~master~~ BILLING meters. The customer meters are read by Redmond and water use is reported to the City for consumption tracking and billing purposes.

The Redmond ~~metered interties~~ BILLING METERS are manually operated by Redmond under a pre-arranged agreement that requires Redmond to notify the City of its intent to open the ~~interties~~ meters prior to water being supplied through the ~~interties~~ meters. The intertie agreement does not identify the capacity of the interties or the maximum amount that Redmond can use. However, as part of the advance notification requirement, Redmond is required to provide the City with an estimated amount of water to be obtained from the ~~intertie~~ meter for that day. This enables the City to evaluate the capability of the system to provide the amount of water requested by Redmond and approve withdrawal of the requested amount only if it will not have an adverse impact on the overall system. As demands in both the City's and Redmond's systems increase in the future, it is expected that the amount of water that these ~~interties~~ meters can provide will decrease without having adverse impacts on other parts of the system.

The source of supply to the three ~~interties~~ meters is currently provided by Supply Stations S1 and S2, and the South Reservoir. Therefore, if flows through the ~~interties~~ meters are increased in the future, the result will be an increased demand on these three facilities.

Bellevue has one metered intertie located adjacent to the Redmond service area at NE 60th Street and 140th Avenue NE. The meter station, known as B1, has an 8-inch meter and is connected to the 545 Zone with a 16-inch transmission main to convey Bellevue's portion of the joint-use storage from the South Reservoir into the Bellevue water system. The station has an estimated capacity of approximately 3,500 gpm. The future demand of the Bellevue system for water supply from this intertie is expected to increase by approximately 50 percent beyond the current demand levels. The increase in demand is still well below the estimated capacity of 3,500 gpm. The primary purpose of this intertie is to provide Bellevue with additional emergency storage provided by the joint-use South Reservoir. This meter station and Redmond's meter stations are shown on the hydraulic model node diagrams contained in **Appendix G**.

Telemetry and Supervisory Control System

Successful operation of any municipal water system requires gathering and using accurate water system information. A telemetry and supervisory control system gathers information and can efficiently control a water system by automatically optimizing facility operations. A telemetry and supervisory control system also provides instant alarm notification to operations personnel in the event of equipment failure, operation problem, fire or other emergency situations.

The City's telemetry system consists of a master telemetry unit and computer-based data logger located at the City's Maintenance Center and remote telemetry units located at the sites of the following facilities: Supply Stations S1, S2 and S3; the North and South Reservoirs; the Albertson's Pressure Reducing/Transfer Station T-1; Kirkland Pressure Station P1; Kirkland K1, K2, K3 and K4 master meters; the Redmond ~~master~~ BILLING meters; and the Bellevue master meter. The Kirkland master meters are located along the I-405 corridor at each of the four freeway crossings of the transmission mains and measure flow entering Kirkland's system on the west side of I-405. Pressure Station P1 measures the pressure in the 395 Zone at approximately NE 116th Street on the east side of I-405.

The existing remote telemetry units communicate with the master telemetry unit using a frame relay system. The master control computer allows water system operators to access the control set points of each facility and modify these set points using the computer's keyboard and mouse. The following hydraulic parameters are logged and monitored at the master control computer.

- **Supply Stations S1 – S3:** Seattle supply system pressure, 545 Zone pressure and flow rate.
- **North Reservoir:** Reservoir level, reservoir inflow rate, and reservoir outflow rate (during pump station operation).
- **North Reservoir 545 Zone Pump Station:** Suction pressure, discharge pressure, and flow rate.
- **South Reservoir:** Reservoir level and reservoir inflow rate (on one of two inlets).
- **650 Zone Pump Station:** Suction pressure, discharge pressure, and flow rate.
- **Albertson's Pressure Reducing/Transfer Station T-1:** Flow rate.
- **Pressure Station P1:** Pressure.
- **Kirkland Meters K1 through K4:** Flow rate.

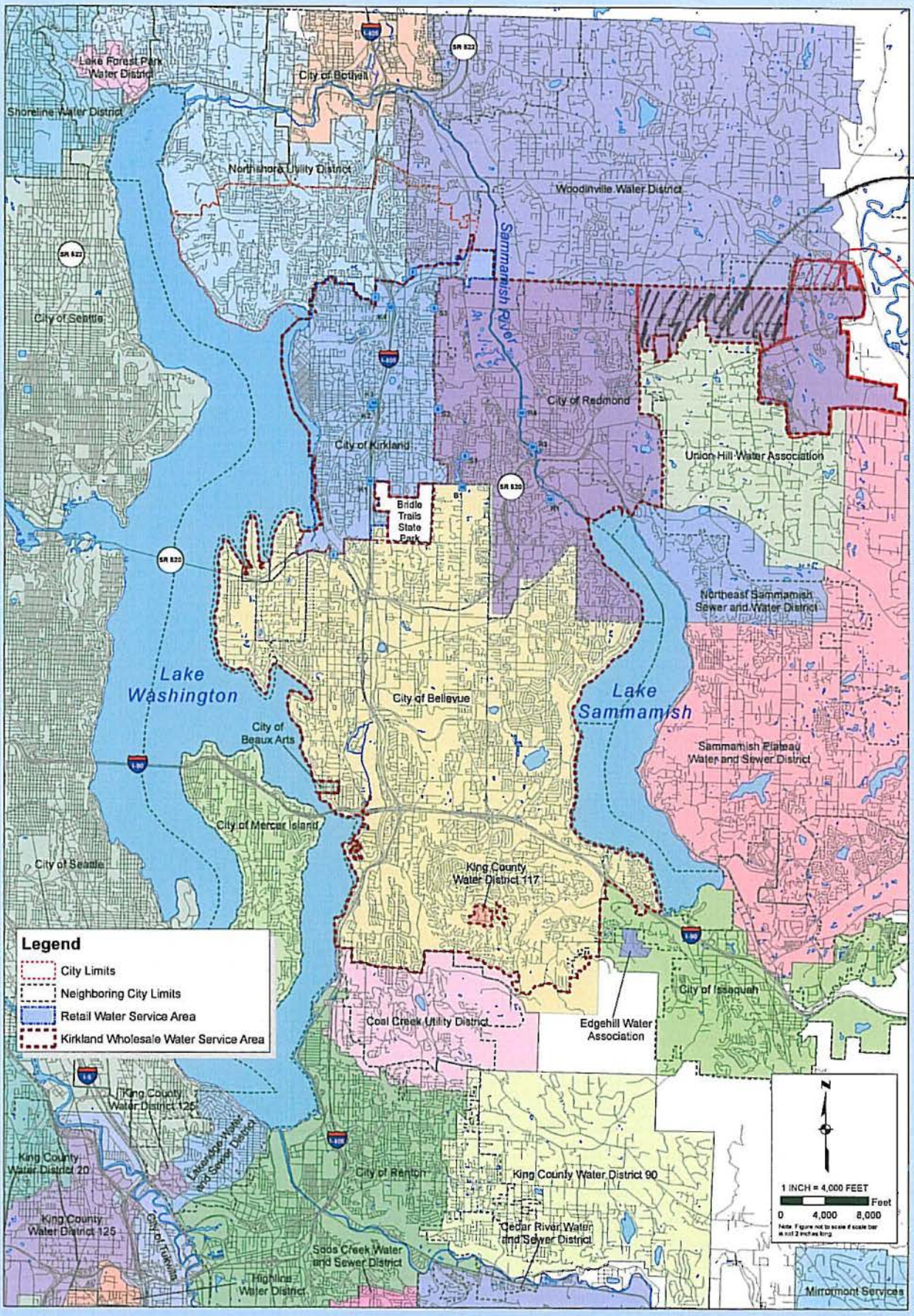

NOT REDMOND'S SERVICE AREA

INCLUDED IN REDMOND'S SERVICE AREA

Figure 2-5

Adjacent Water Systems

City of Kirkland

2014 Comprehensive Water System Plan

Modified: August 21, 2014

J:\Data\Kir\112-051\CAD\GIS\maps\Fig2-5_AdjPurv.mxd By: kchristensen

Water System Analysis

7

WHAT ABOUT REDMOND DEMANDS THAT RECEIVE WATER THRU KIRKLAND?

KIRKLAND SHOULD GET COPIES OF BOTH REDMOND'S & BELLEVUE'S WATER MODELS FOR THEIR SYSTEM EVALUATION. INCLUDING STORAGE EVALUATION.

INTRODUCTION

This chapter, which presents the analysis of the City of Kirkland's (City) existing water system, was originally prepared as part of the City's 2007 Water System Plan (WSP). The City's existing demands have decreased since the preparation of the City's 2007 WSP, which used 2004 demands as the baseline demands. Because demands have decreased, the existing and future system supply and hydraulic analyses presented in the City's 2007 WSP are conservative, and are duplicated in this 2014 WSP for the existing, 6-, 10-, and 20-year analyses. Although the City's demands have decreased, the computed number of equivalent residential units (ERUs) has increased, and the storage and system capacity analyses have been updated to reflect these increases.

Individual water system components were analyzed to determine their ability to meet policies and design criteria under both existing and future water demand conditions. The policies and design criteria are presented in **Chapter 5** and the 2014 through 2035 water demands are presented in **Chapter 4**. A description of the water system facilities and their current operation is presented in **Chapter 2**. Proposed improvements that resolve the deficiencies identified in this chapter are presented in **Chapter 9**. The last section of this chapter presents the existing system capacity analysis that was performed to determine the maximum number of ERUs that can be served by the City's water system.

PRESSURE ZONES

The ideal static pressure of water supplied to customers is between 40 and 80 pounds per square inch (psi). Pressures within a water distribution system are commonly as high as 150 psi, requiring pressure regulators on individual service lines to reduce the pressure to 80 psi or less. It is difficult for the City's water system (and most others) to maintain distribution pressures between 40 and 80 psi, primarily due to the topography of the water service area.

Table 7-1 lists each of the City's eight pressure zones, the highest and lowest elevation served in each zone, and the minimum and maximum distribution system pressures within each zone, based on maximum static water conditions (full reservoirs and zero demands). The City is currently providing water at pressures of at least 32 psi throughout the entire water system, as shown in the table. This is below the preferable range of 40 to 80 psi, but is higher than the Washington State Department of Health (DOH) minimum requirement of 30 psi. The lowest pressures in the distribution system occur at the intersection of 3rd Street and 13th Avenue. The highest pressures in the distribution system occur on the north side of the 450 Zone, on 116th Avenue NE near the boundary of the 395 Zone south of NE 124th Street. The services at this location, as well as services in other pressure zones, have static pressures greater than 80 psi. All water services in these high pressure areas have individual pressure reducing valves to reduce the service pressure to 80 psi or less. Additionally, the City requires individual pressure reducing valves on all new services. Also shown in the table are the areas of the City of Redmond's (Redmond) water service area supplied directly by the City's jointly-owned facilities.

Supply Analysis

Supply Station S1 provides water directly into the 545 Zone, which in turn fills the North Reservoir and South Reservoir and supplies the lower pressure zones. Supply Station S2 provides water directly into the 545 Zone, which will also fill the North Reservoir and South Reservoir and supply the lower pressure zones. Supply Station S3 provides water directly into the 545 Zone and the 650 Zone when the hydraulic grade in the Tolt line is high enough. Water is pumped from the Tolt line into the 545 Zone when the hydraulic grade at Supply Station S2 is below 545 feet. All of the supply stations are jointly owned, with the percentage of ownership assigned in the Rose Hill Water District Assumption Agreement. These contractual amounts were used to determine the amount of supply available to the City. Since all pressure zones in the system normally receive water from all three supply stations, the supply analyses are based on an evaluation of the existing supply facilities providing water to the system as a whole.

Table 7-2 summarizes the current and future water supply requirements of the Kirkland/Redmond/Bellevue supply area, as well as the City's water system. The existing water supply evaluation is based on 2004 supply requirements (i.e., demands) and current supply capacities of the facilities. The supply capacities of Supply Station S1 and Supply Station S3 are based on maximum allowable water velocities through the piping and valves at the stations. The supply capacity of Supply Station S2 is based on the capacity of the station's pumps. The future water supply evaluation is based on future 6-year, 10-year, and 20-year development supply requirements (i.e., projected demands) and current supply capacities of the facilities. The demands for the City used in the evaluation are future demand projections without reductions from water use efficiency (WUE) efforts, as shown in **Table 4-11** of **Chapter 4**. Therefore, if additional reductions in water use are achieved in the future through WUE efforts, the total supply required in the future will be less than that ~~shown in~~ **Table 7-2**. Demands for the City of Bellevue (Bellevue) are consistent with estimates made for the City's 1998 Comprehensive Water System Plan, while demands for the City of Redmond are from Redmond's 2011 ~~Draft~~ Comprehensive Water System Plan.

DOES BELLEVUE HAVE A MORE RECENT WSP?

The results of the water supply evaluation indicate that the City currently has approximately 4,309 gallons per minute (gpm) of excess supply capacity based on 2004 demand levels. **Table 7-2** also indicates that the existing supply facilities are sufficient to meet the demands of existing and future customers through 2035. It is estimated that the City will have approximately 5,454 gpm of excess supply capacity if the growth projections are realized; there will be additional excess supply if WUE efforts are successful.

existing and future storage analyses that follow. This calculation determined the standby storage volume required for the City's operating area.

The areas of highest elevation directly served by each tank lie within the City's water service area. The South Reservoir serves the City's 545 Zone and Redmond's 545 Zone directly, while the North Reservoir serves the City's 450 Zone directly and Redmond's 395 Zone and 285 Zone via a transmission main and PRV. Therefore, the controlling elevations for standby, fire flow, equalizing, and dead storage lie within the City's water service area.

Fire Flow Storage – Volume of the reservoir used to supply water to the system at the maximum rate and duration required to extinguish a fire at a building with the highest fire flow requirement. The magnitude of the fire flow storage is the product of the fire flow rate and duration of the system's maximum fire flow requirement, as established by the local fire protection authority. The DOH requires that fire flow storage be stored above an elevation that will provide a minimum pressure of 20 psi at all service connections throughout the system under MDD conditions. The fire flow storage requirements shown in the evaluation that follow are based on a 5,000 gpm fire flow rate and 5-hour duration. In addition, the fire flow and standby storage components were not consolidated, as shown in the storage evaluation tables.

Dead Storage – Volume of the reservoir that cannot be used, because it is stored at an elevation that does not provide system pressures that meet the minimum pressure requirements established by the DOH, without pumping. This unusable storage occupies the lower portion of most ground-level reservoirs. Water that is stored below an elevation that cannot provide a minimum pressure of 20 psi is considered dead storage for the analyses that follow.

Storage Analysis

Similar to the supply facility analysis, the storage analyses are based on an evaluation of the existing reservoirs providing water to the system as a whole, including Bellevue and Redmond, since water from either reservoir may be utilized by any zone in the system through PRVs or booster pump stations. The demands used in the evaluation of future storage requirements are future demand projections without reductions from WUE efforts, as shown in **Table 4-11** of **Chapter 4**.

Existing Storage Evaluation

STORAGE EVALUATION IS NOT CALCULATED CORRECTLY. REDMOND OWNS 34% OF NORTH TANK & 29.4% OF SOUTH TANK TOP TO BOTTOM.

Table 7-4 summarizes the results of the water storage evaluation for the existing system, based on 2004 storage requirements (i.e., demands) and existing storage capacities of the reservoirs. The maximum combined storage capacity of the two reservoirs in the City's system is 25.5 MG, as shown in **Table 7-4**. However, both reservoirs are joint-use facilities. The amount of storage available to the City is based on the percent ownership the City has in the reservoirs. The City's ownership in the North Reservoir is 66 percent; Redmond's ownership is 34 percent; and Bellevue's ownership is 0 percent. The City's ownership in the South Reservoir is 57.2 percent; Redmond's is 29.4 percent; and Bellevue's is 13.4 percent. The City's 14.3 MG North Reservoir contains approximately 4.89 MG of dead storage (i.e., non-usable storage). Therefore, the capacity of the reservoirs is decreased to 20.61 MG of storage that may be utilized as usable storage for operational, equalizing, standby, and fire flow purposes. The standby storage component is the only component that changed from the City's 2007 WSP, which increased based on the DOH recommendation that the minimum standby storage volume be no less than 200 gallons per ERU. **Table 7-4** was developed based on each city's percent ownership in each storage facility and the available (i.e., non-dead) storage in each storage facility. Each city is assumed to have a stake in the operational storage

volume proportional to its ownership in that facility. The Joint Board will discuss strategies to utilize the tanks to best serve all of the water systems at their regular meetings. As a conservative measure, the amount of storage allotted to Bellevue and Redmond is subtracted to arrive at the total storage available to the City. It is assumed that each city will determine what uses are applied to its storage available in the joint-use facilities (e.g., Redmond will determine how to assign its 6.49 MG of storage independently of the City). Accordingly, the surplus or deficient storage amounts shown in the table are for the City only. The results of the existing water storage evaluation indicate that the City has adequate storage to meet existing demands. As shown in **Table 7-4**, the City has an additional 3.20 MG of storage that could be allocated to standby storage in an emergency. If all supply sources could not operate, the City could have a total of 7.16 MG of storage to use as standby storage. Based on ADDs, this would be 2.00 days of standby storage.

OPERATIONAL & FIRE FLOW STORAGE IS SHARED

Table 7-4
Existing Storage Evaluation

Description	Existing System
Available/Usable Storage (MG)	
Maximum Storage Capacity	25.50
Dead (Non-usable) Storage	-4.89
Total Available Storage	20.61
Redmond Usable Storage[1]	-6.49
Bellevue Usable Storage[1]	-1.50
Total Storage Available to Kirkland	12.62
Operational Storage (MG)	
Redmond Operational Storage[1]	0.93
Bellevue Operational Storage[1]	0.21
Kirkland Operational Storage[1]	1.81
Required Storage for Kirkland (MG)	
Operational Storage	1.81
Equalizing Storage	2.14
Standby Storage[2]	3.96
Fire Flow Storage	1.50
Total Storage Required for Kirkland	9.42
Surplus or Deficient Storage for Kirkland (MG)	
Kirkland's Surplus or Deficient Amt.	3.20

(1) Operational and Usable Storage amounts are based on each city's ownership in joint-use reservoirs and the typical reservoir draw-downs.

(2) Standby storage is only value that changed from 2007 WSP.

34%

O	
E	
F	
ST	
D	

Future Storage Evaluation

Future storage requirements of the system were computed for the 6-, 10-, and 20-year planning periods, and were based on year 2020, 2025, and 2035 demand projections, respectively. The analyses were performed to determine the adequacy of the City's existing reservoirs to meet storage requirements in the future. As shown in **Table 7-5**, no additional storage facilities will be required through 2035. **Table 7-5** was developed with the same criteria listed for **Table 7-4**. If all supply sources could not operate, the City would have a total of 6.66 MG of storage to use as standby storage based on 2035 projections. Based on projected 2035 ADDs, this would be 1.29 days of standby storage. Between 2020 and 2035, the standby storage requirement increases due to the projected increase in ERUs.

Table 7-5
Future Storage Evaluation

Description	Future Projections[1]		
	2020 (+6 yrs)[1]	2025 (+10 yrs)[1]	2035 (+20 yrs)[1]
Available/Usable Storage (MG)			
Maximum Storage Capacity	25.50	25.50	25.50
Dead (Non-usable) Storage	-4.89	-4.89	-4.89
Total Available Storage	20.61	20.61	20.61
Redmond Usable Storage[2]	-6.49	-6.49	-6.49
Bellevue Usable Storage[2]	-1.50	-1.50	-1.50
Total Storage Available to Kirkland	12.62	12.62	12.62
Operational Storage (MG)			
Redmond Operational Storage[2]	0.93	0.93	0.93
Bellevue Operational Storage[2]	0.21	0.21	0.21
Kirkland Operational Storage[2]	1.81	1.81	1.81
Required Storage for Kirkland (MG)			
Operational Storage	1.81	1.81	1.81
Equalizing Storage	2.31	2.41	2.65
Standby Storage[3]	4.38	4.60	5.06
Fire Flow Storage	1.50	1.50	1.50
Total Storage Required for Kirkland	10.00	10.33	11.02
Surplus or Deficient Storage for Kirkland (MG)			
Kirkland's Surplus or Deficient Amt.	2.62	2.29	1.60

(1) Projections are based on growth within the City's water service area.

(2) Operational and Usable Storage amounts are based on each city's ownership in joint-use reservoirs and the typical reservoir draw-downs.

(3) Standby storage is only value that changed from 2007 WSP.

Facility Deficiencies

Both of the City's reservoirs are in good condition. The reservoirs should continue to undergo routine maintenance to keep them functioning properly.

DISTRIBUTION AND TRANSMISSION SYSTEM

This section evaluates the City's existing distribution and transmission system (i.e., water mains) to determine if they are sized and looped adequately to provide the necessary flow rates and pressures

to meet the existing and future requirements of the system. This section, which has been updated for this WSP, also identifies deficiencies that are unrelated to the capacity of the water mains.

Analysis Criteria

Distribution and transmission water mains must be capable of adequately and reliably conveying water throughout the system at acceptable flow rates and pressures. The criteria used to evaluate the City's distribution and transmission system are the state mandated requirements for Group A water systems contained in WAC 246-290-230, Distribution Systems. The pressure analysis criteria states that the distribution system "...shall be designed with the capacity to deliver the design peak hour demand quantity of water at 30 psi under peak hour demand flow conditions measured at all existing and proposed service water meters." It also states that if fire flow is to be provided, "... the distribution system shall also provide maximum day demand plus the required fire flow at a pressure of at least 20 psi at all points throughout the distribution system."

Hydraulic analyses of the existing system were performed under existing peak hour demand conditions to evaluate its current pressure capabilities and to identify existing system deficiencies. The existing system was also analyzed under existing MDD conditions to evaluate the current fire flow capabilities and to identify additional existing system deficiencies. Additional hydraulic analyses were then performed with the same hydraulic model under future MDD conditions and with proposed improvements to demonstrate that the identified improvements will eliminate the deficiencies and meet future requirements. Following is a description of the hydraulic model and the operational conditions and facility settings used in the analyses.

Hydraulic Model

Description

NEED TO INCLUDE REDMOND'S WATER MODEL TO MAKE SURE SHARED FACILITIES ARE ADEQUATE

A computer-based hydraulic model of the existing water system was created in 1996 using Cybernet for the City's 1998 WSP. The model was converted for the purposes of the 2007 WSP to version 8.0 of the WaterGEMS program, developed by Bentley Systems, and was subsequently updated in version 8i of WaterGEMS for this WSP. All facilities and water mains in the City's water system, including dead-end mains, were modeled using current data. The water mains were entered from AutoCAD water system maps and as-built records provided by the City. Elevation data for the model's junction nodes were electronically extracted from digital contour maps provided by the City. Joint facility mains between the supply stations and master meters were entered into the model based on available records. Water mains outside of the City's retail service area and not owned or maintained by the City were included in the model but not analyzed for deficiencies for the purposes of this WSP. A hydraulic model node diagram that provides a graphical representation of the model of the existing water system is contained in **Appendix G**.

Demand Data

The hydraulic model of the existing system contains 2013 ADD data. Consumption data from 2009 metered billing records were distributed based on the recorded usage for each parcel to the closest representative junction node of the model, which was then uniformly scaled to match the 2013 supply data. Peaking factors shown in **Chapter 4** were used to analyze the system under PHD and MDD conditions.

Table 8-5
Utility and Agency Contacts

Utility Contacts			
Agency	**Contact**	**Phone**	**Address**
City of Redmond Water	Laurelin M. Ward	425-556-2819 ~~425-444-2639~~ 360-271-4168	15670 Northeast 85th Street Redmond, WA 98052
City of Bellevue Water	Andy Tuchscherer	425-452-6469	Bellevue, WA
City of Bellevue Service Center	Operations (24-hour)	425 452-7840	2901 115th Ave NE Bellevue, WA 98004
Northshore Utility District	Operations (24-hour)	425-398-4403 425-398-4400	6830 Northeast 185th Street Kenmore, WA 98028
Seattle Public Utilities	Water Quality	206-684-7406 206-684-5941	Seattle, WA
Seattle Public Utilities	Supply Station Meters	206-386-1513	Seattle, WA
Seattle Public Utilities	Operations (24-hour)	206-386-1818	Seattle, WA
Woodinville Water District	Operations (24-hour)	425-483-9104	17238 NE Woodinville Duvall Rd. Woodinville, WA 98072
Agency Contacts			
Agency	**Contact**	**Phone**	**Address**
Washington State Department of Health	Paige Igoe, P.E. Regional Engineer	253-395-6764	Northwest Drinking Water 20435 72nd Ave S, Ste 200 Kent, WA 98032-2358

Material Readiness

Some critical repair parts, tools, and equipment are on-hand and kept in fully operational condition. As repair parts are used, they are re-ordered. Inventories are kept current and adequate for most common emergencies that can reasonably be anticipated. The City has ready access to an inventory of repair parts, including parts required for repair of each type and size of pipe within the service area. Additionally, the City has been provided with after-hours emergency contact phone numbers for key material suppliers, which gives the City 24-hour access to parts not kept in inventory.

Emergency Response Plan and Vulnerability Assessment

An Emergency Response Plan (ERP) has been prepared as part of the City's Vulnerability Assessment (VA) Plan. The ERP, which was completed in 2004, contains a contingency operation plan for responding to emergency events, a list of water personnel responsible for making decisions in emergency situations, and other elements. The ERP and VA Plan are exempt from public disclosure under the provisions of RCW 42.56.210. These plans are available for review by authorized personnel on a need-to-know basis. A copy of the City's Seismic Vulnerability Analysis and Earthquake Response Plan is included in **Appendix Q** of this WSP.

CIP M4: Comprehensive Water System Plan Update

Deficiency: The Washington Administrative Code (WAC) 246-290-100 requires that the City's WSP be updated every 6 years and submitted to the Washington State Department of Health (DOH) for approval. It is anticipated that WSP updates will only be required every 10 years in the future.

Improvement: Update the WSP every 10 years or as required by DOH.

CIP M5: Emergency Sewer Program Water Main Replacement Program

Deficiency: A large portion of the system contains AC, galvanized, and PVC water main that is old and prone to problems. The City desires to coordinate the replacement of deficient water mains with sewer line construction when possible to reduce construction costs.

Improvement: Replace AC, galvanized, and PVC water main as needed and in coordination with sewer main improvements. An amount of $50,000 every 2 years has been allotted for this project. This improvement includes water main projects that are specifically identified in the **Water Main Improvements** section of this chapter and is intended to allow the City to replace water mains not necessarily scheduled for replacement in those years but are in the vicinity of sewer projects constructed in those years.

CIP M6: Vulnerability Analysis Implementation

Deficiency: The City's Vulnerability Analysis identified several improvements to better protect the City's water infrastructure from malicious acts. Efforts continue towards completing those improvements.

Improvement: Implement improvements identified in City's Vulnerability Analysis.

Joint-use Facility Improvements

The cost of proposed joint-use facility improvements will be shared among the Cities of Kirkland, Redmond, and Bellevue in proportion to their ownership in the facility according to the Rose Hill Assumption Agreement contained in **Appendix E**. All joint-use facility improvements will be discussed and approved by the Joint Board prior to being constructed. — BOARD SHOULD ~~SCHEDULE~~ DECIDE PROJECT SCHEDULE FOR THESE PROJECTS.

CIP J1: Supply Station S3 Replacement

Deficiency: The existing supply station consists of a small below-grade vault with 3-inch and 10-inch control valves, a flow meter, and telemetry equipment. The vault does not have a drain and commonly has water in the bottom. The vault does not have lighting, heating, or ventilation. Access into the vault is through the top hatch using a standard wall-mounted vault ladder. Space inside the vault is limited and makes equipment maintenance tasks difficult. The piping and control valves are not sized properly to maximize the flow capability of the station or minimize pipeline velocities during peak demands.

Improvement: Replace the existing station with a new below-grade station that resolves the deficiencies identified above. The physical location and additional supply points of the station may be revised during the design of the improvement. The Joint Board should decide the final configuration prior to construction.

CIP J2: North Reservoir Pump Station Replacement

Deficiency: The existing below-grade pump station does not have heating or ventilation. The poor layout of piping and equipment inside the station makes it difficult to perform maintenance and operation tasks. The reliability and remaining service life of the existing 2,500 gpm pump is unknown.

The primary purpose of the pump station is to transfer water from the 450 Zone 14.3-million-gallon (MG) North Reservoir to the 545 Zone 11.2 MG South Reservoir for maintaining adequate levels in the South Reservoir (i.e., 545 Zone pressures), especially during high demand periods. If the South Reservoir is out of service or the hydraulic grade in the Tolt Eastside Supply Line is suppressed, the North Reservoir Pump Station could be used to maintain adequate pressures in the 545 Zone. The existing pump station does not have adequate capacity to accomplish this based on the projected supply requirements of the future.

Improvement: Replace the existing station with a new station that resolves the deficiencies identified above and has a capacity of 5,000 gpm. In addition to transferring water between the two reservoirs, the proposed pump station will be capable of maintaining adequate 545 Zone pressures during high demand periods or when the City of Seattle (Seattle) provides supply at or near the minimum contract head levels. The proposed pump station in conjunction with the proposed replacement of Supply Station S3 will also serve as a short-term backup supply facility for the 545 Zone in the event that Supply Station S2 is out of service. The pump station will also have the capability to pump water out of the North Reservoir and directly into the 450 Zone to utilize all water from the reservoir when it is drained for cleaning and inspection.

CIP J3: North Reservoir Outlet Meter

Deficiency: The reservoir has a bi-directional flow meter on the inlet piping from the 545 Zone, but does not have a meter on its 18-inch outlet to the 450 Zone. This improvement will assist in monitoring reservoir supply rates.

Improvement: Install a 16-inch meter, vault, telemetry, and appurtenances on the 18-inch outlet piping. Modify the master telemetry unit at the City Maintenance Center to include the monitoring of flows through this new meter.

CIP J4: Supply Station S1 Improvements

Deficiency: The existing supply station consists of a below-grade vault with a single 12-inch inlet pipe from the Seattle Supply System, 8-inch and 12-inch outlet piping, a flow meter and an 8-inch control valve on the 8-inch outlet piping. The station has inadequate lighting and no heating or ventilation. Consequently, the station has a problem with condensation buildup. Access into the vault is through the top hatch using a standard wall-mounted vault ladder. Access for equipment removal is poor. The 8-inch piping and control valve are not sized properly to maximize the flow capability of the station or minimize pipeline velocities during peak demands. The station lacks the capability to control the rate of flow through the 12-inch outlet pipe.

Improvement: Install adequate lighting, heating, and ventilation in the station. Replace the existing piping and valves with larger piping and valves to reduce pressure losses through the station and ensure adequate supply for demands from the Redmond master meters. Install control valves to control rate of flow and pressure in both outlet pipes. Install new lighting, heating, and ventilation equipment. Install electrical improvements as necessary for the new equipment. Install access improvements to improve safety when entering the station.

Table 9-4
Proposed Improvements Implementation Schedule

CIP No.	Size: Length (ft)	Size: Diameter	Description: In	Description: From	Description: To	Estimated Cost	Rank Points	Priority Rank	2014	2015	2016	2017	2018	2019	2020	2021	2022	2023	2024	2025	2026-2035	2035+
									Planned Year of Project and Estimated Cost in 2014 $$ (x 1000)													
327	1,656	12", 16"	~NE 40th (Office/Multi-Family)	W of Cross Kirk. Corridor	E of Lk Wash Blvd	$456,000	22	M														$456
328	1,477	8", 12", 16"	~106th Ave NE (Office/Multi-Family)	NE 38th Pl	~NE 40th St	$405,000	26	H														$405
329	2,236	12", 16"	NE 38th Pl	Lake Wash Blvd NE	NE 37th Cir	$615,000	28	H														$615
330	3,224	12", 16"	Lake Wash Blvd NE	NE 38th Pl	Northup Way	$891,000	36	H														$891
			Northup Way	Lake Wash Blvd NE	NE 37th Cir																	
			NE 37th Cir	NE 38th Pl	Northup Way																	
331	95	12"	Parking West of Lk Wash Blvd	~NE Points Dr	North End of Parking Lot	$26,000	25	H														$26
332	838	12"	101st Way NE	NE Points Dr	End of Road	$227,000	22	M														$227
			100th Ln NE	NE Points Dr	NE 37th Ct																	
333	1,130	12"	NE Points Dr	100th Ln NE	97th Ave NE	$306,000	19	L														$306
334	486	16"	141st Ave NE	Approx. NE 133rd St	Approx. NE 134th St	$148,000	10	L														$148
335	1,534	16"	NE 124th St	Willows Rd NE	285 PRV at 135th Ave	$466,000	8	L														$466
336	1,857	16"	Willows Rd NE	NE 124th St	285 PRV at 135th Ave	$564,000	25	H														$564
337	165	16"	Private Property	Willows Rd NE	Hydrant at ~141st Ave NE	$51,000	25	H														$51
338	384	16"	141st Ave NE	Willows Rd NE	Approx. NE 126th St	$117,000	15	L														$117
339	738	16"	NE 124th St	Willows Rd NE	~14000 NE 124th St	$224,000	25	H														$224
340	1,773	12", 16"	Private Property SE of Railroad	NE 124th St	Willows Rd NE	$515,000	12	L														$515
341	920	16"	NE 124th St	285 PRV at 135th Ave	Approx. 132nd Ave NE	$280,000	21	M														$280
342	918	12"	135th Ave NE	NE 124th St	NE 126th Pl	$249,000	25	H														$249
343	2,001	16"	NE 126th Pl	Approx. 132nd Ave NE	NE 128th St	$608,000	16	L														$608
344	875	16"	139th Ave NE	NE 128th St	285 PRV at 135th Ave	$266,000	19	L														$266
345	350	16"	Approx. 136th Ave NE	NE 126th Pl	Hydrant at ~NE 128th St	$107,000	25	H														$107
			Approx. 136th Ave NE	NE 126th Pl	Hydrant at ~NE 125th St																	
346	5,077	12", 16"	Private Property NW of Railroad	135th Ave NE	139th Ave NE	$1,453,000	11	L														$1,453
Total - Water Main Improvements						**$127,727,000**			**$4,199**	**$201**	**$785**	**$2,139**	**$2,014**	**$5,683**	**$2,789**	**$0**	**$0**	**$0**	**$0**	**$0**	**$0**	**$106,765**
					Unscheduled Water Main Improvements																	
WM	Unscheduled Water Main Improvements					$0										$2,843	$2,843	$2,843	$2,843	$2,843	$27,152	-$41,367
Total - Unscheduled Water Main Improvements						**$0**			**$0**	**$0**	**$0**	**$0**	**$0**	**$0**	**$0**	**$2,843**	**$2,843**	**$2,843**	**$2,843**	**$2,843**	**$27,152**	**-$41,367**
					Pressure Reducing Station and Pressure Relief Improvements																	
PRV1	Annual Pressure Reduction Station Replacement					O&M Funded																
Total - Pressure Reducing Station Improvements						**O&M Funded**																
					Miscellaneous Improvements																	
M1	Annual Customer Meter Replacement Program ($40,000 per Year)					O&M Funded																
M2	Annual AC, Galvanized, PVC Main Replacement ($25,000 per Year)					O&M Funded																
M3	Telemetry System Upgrade ($10,000 per Year)					O&M Funded																
M4	Comprehensive Water System Plan Update (Update Every 10 Years)					$300,000													$100		$100	$100
M5	Emergency Sewer Program Water Main Replacement Program					$550,000				$50		$50		$50		$50		$50		$50		$250
M6	Vulnerability Analysis Implementation					$275,000			$55	$55	$55	$55	$55									
Total - Miscellaneous Improvements						**$1,125,000**			**$55**	**$105**	**$55**	**$105**	**$55**	**$50**	**$0**	**$50**	**$0**	**$50**	**$100**	**$50**	**$100**	**$350**
					Joint-use Facility Improvements (Kirkland's Share)																	
J1	Supply Station S3 Replacement (Total Cost = $395,000)					$233,000																$233
J2	North Reservoir Pump Station Replacement (Total Cost = $919,000)					$542,000														$542		
J3	North Reservoir Outlet Meter Addition (Total Cost = $86,000)					$51,000												$51				
J4	Supply Station S1 Improvements (Total Cost = $230,000)					$132,000											$132					
J5	South Reservoir Recoating (Total Cost = $1.02M)					$583,000													$583			
Total - Joint-use Facilities Improvements (Kirkland's Share)						**$1,541,000**			**$0**	**$0**	**$0**	**$0**	**$0**	**$0**	**$0**	**$0**	**$132**	**$51**	**$583**	**$542**	**$0**	**$233**
TOTAL - ALL IMPROVEMENTS						**$130,393,000**			**$4,254**	**$306**	**$840**	**$2,244**	**$2,069**	**$5,733**	**$2,789**	**$2,893**	**$2,975**	**$2,944**	**$3,526**	**$3,435**	**$27,252**	**$65,981**

JOINT USE BOARD SHOULD DECIDE WHEN THESE PROJECTS SHOULD BE SCHEDULED

DUPLICATE ORIGINAL

Cascade Water Alliance

INTERLOCAL CONTRACT

Amended and Restated

December 15, 2004

OUTDATED

UPDATED CONTRACT WAS VOTED ON 10/26/2011

50-YEAR DECLINING BLOCK

WATER SUPPLY AGREEMENT BETWEEN

THE CITY OF SEATTLE

AND

THE CASCADE WATER ALLIANCE

10-02-03

OUTDATED

USE JULY 15, 2013 DOCUMENT

STATE OF WASHINGTON
DEPARTMENT OF HEALTH
NORTHWEST DRINKING WATER REGIONAL OPERATIONS
20425 72nd Avenue South, Suite 310, Kent Washington 98032-2388

December 8, 2014

RECEIVED BOTHELL
RH2 ENGINEERING INC.
JOB NO:

GREG NEUMANN, WATER MANAGER
KIRKLAND, CITY OF
123 FIFTH AVE
KIRKLAND WA 98033

DEC 11 2014

ROUTE TO: mc
FILE:

RE: Kirkland, City of Water System, ID #42250T
King County
2014 Comprehensive Water System Plan – Review Comments
Submittal #: 14-0902

Dear Greg:

Thank you for submitting the Water System Plan (WSP) for the City of Kirkland (the City) received in this office on September 4, 2014. We have reviewed the plan and offer the following comments. These comments must be adequately addressed prior to approval of the WSP.

General System Information

1. The capacity of the Seattle inlets shown in Exhibit II of the SPU Contract with Cascade Water Alliance (Appendix C) does not match the capacity shown in Table 2-1. Please clarify.
2. The 132nd Ave NE Intertie with Bellevue discussed on page 2-14 and 2-18 has been approved and all required documentation has been received and acknowledged by DOH. Please edit the text.
3. Please provide the signed agreement for the for the Northshore Utility District (NUD) intertie (mentioned on page 2-15) at NE Totem Lake Way dead end when it is complete.
4. The Woodinville emergency well discussed on page 2-19 has not been approved for use by DOH as of the writing of this letter.

Basic Planning Data

5. Describe in the text the basis for the PHD:PDD peaking factor of 1.8.

6. In Table 4-6, why is the average day demand based on 2009 data? Is it possible to use more recent data?

Water Quality

7. Every water system is required to prepare a coliform monitoring plan (CMP) for their distribution system. SPU may collect routine samples, but Kirkland staff is required to take repeat samples within their distribution system. You must identify the repeat samples and your staff must be trained in how to collect coliform samples. Please provide the following:
   - A CMP for the City of Kirkland which includes a map of the routine and repeat sampling location. A template is available on our website: http://www.doh.wa.gov/CommunityandEnvironment/DrinkingWater/Contaminants/Coliform/PreparingaColiformMonitoringPlan/LargeorMultipleSource
   - Standard operating procedures (SOPs) for coliform sampling
   - *E.coli* response plan for how the City would implement a boil water advisory in the event of an acute MCL violation
8. On Page 6-13, it states the chlorine residual in the City's distribution system is between 0.2 and 4.0 mg/L. What monitoring does the City conduct to measure residual in the distribution system? Provide the average residual observed in the system.
9. Please provide the most current results for lead and copper sampling conducted in the City's distribution system.
10. Please provide the Stage 2 DBP Monitoring Plan for the City's system.

Water Use Efficiency

11. In Table 4-8, what is the definition of adjusted DSL? Please reconcile the DSL information provided in the WSP with the annual WUE reports submitted to DOH.
12. Provide a resolution for adoption of the City's water use efficiency goal that was introduced in a public forum.

System Analysis

13. Please provide more detail on how equalizing, operating and standby storage components were calculated for the storage analysis included in Table 7-4.
14. It is noted in Table 7-2 that the capacities of the inlets are based on the maximum allowable water velocities through the piping and valves at the stations. How does this compare with the values specified in the SPU contract? How would the supply analysis result change if the contract values were used?
15. Was the model updated for the analysis shown to incorporate any upgrades in pipe size or changes in operation/controls?
16. Please describe how the SPU inlets were modeled for the system analysis.
17. Please include a summary of calibration results (as noted on Page 7-17) in an appendix.

18. The text says that Table 7-12 presents a summary of representative system nodes. How were these nodes selected? What does it mean to derate the results to reflect a maximum water velocity of 8 feet per second? Was the model run with this velocity limitation?

Operations and Maintenance

19. Please update the DOH mailing address in Table 8-3.

CIP

20. Submittal of a project report and construction documents for review and approval are required for water system projects including upgrades to the SPU inlet stations and recoating of reservoirs. Please submit as built documentation of the SS2 Upgrade project. If you have questions regarding what projects need to be submitted, please give me a call and we can discuss the requirements.

Distribution Facilities Design and Construction Standards

21. Recommend you reconfigure details W.08 and W.09 to eliminate the drain hole on the vent for the valve assembly. When would you have water in this vent? Recommend you eliminate the drain to prevent potential contamination from entering your distribution system.

Miscellaneous

22. Provide a signed determination of local government consistency from the City of Kirkland Planning Department.
23. Provide an Adoption Ordinance for your WSP from King County, if the City provides water service in unincorporated King County.
24. Provide signed SEPA Checklist and a SEPA Threshold Determination with the final WSP submittal.
25. The water system must meet the consumer input process outlined in WAC 246-290-100(8). Please include documentation of a consumer meeting discussing the WSP, prior to DOH approval of the WSP.
26. Prior to DOH approval, the City's governing body must approve and adopt the WSP. This is a new requirement resulting from the Municipal Water Legislation.
27. Please provide copies of any comments made by adjacent purveyors or other interested parties along with the City's response to those comments.

We hope that you have found these comments to be clear, constructive and helpful in the development of your final draft WSP. We ask that you submit the revised WSP on or before **March 5, 2015**. In order to expedite the review of your revised submittal, please include a cover letter summarizing how each of the above comments was addressed in the revised WSP and where each response is located (i.e., page numbers, Appendices, etc.)

Regulations establishing a schedule of fees for review of planning, engineering, and construction documents have been adopted (WAC 246-290-990). Please note that we have included an invoice in the amount of $5,484.00 for the review of the Water System Plan. This fee covers our current review and one more submittal for this project. If additional submittals are required, then an invoice for additional fees will be included with our final approval letter. Please remit your complete payment in the form of a check or money order within thirty days of the date of this letter to: **WSDOH, Revenue Section, PO Box 1099, Olympia WA 99507-1099.**

Thank you again for submitting your draft Water System Plan for our review. If you have any comments or questions concerning our review, please contact either of us.

Sincerely,

Richard Rodriguez
Regional Planner
(253) 395-6771

Paige Igoe, PE
Regional Engineer
(253 395-6764)

Enclosure (invoice)

cc: Public Health – Seattle & King County
Steve Hirschey, King County UTRC
Jerry Liszak – WSDOE, NWRO
Michele Campbell, PE, RH2 Engineering, Inc.
Joan Kersnar, PE, Seattle Public Utilities

King County

Utilities Technical Review Committee
Department of Natural Resources and Parks
King Street Center
210 South Jackson Street, Suite 512
Seattle, WA 98104-3855
www.kingcounty.gov

November 20, 2014

Ray Steiger, P.E.
Public Works Director
City of Kirkland
123 Fifth Avenue
Kirkland, WA 98033

Dear Mr. Steiger:

Thank you for submitting the City of Kirkland Comprehensive Water Plan (Plan) for King County approval. The Plan was received on September 8, 2014. In accordance with King County Code (KCC) 13.24 the King County Utilities Technical Review Committee (UTRC) has reviewed the Plan for consistency with the King County Comprehensive Plan and KCC.

In reviewing the Plan, the UTRC found that the Plan is largely consistent with the County's comprehensive plan and code. However, it is necessary to complete and include the King County reclaimed water checklist (attached) in the plan before the UTRC can make a recommendation to the King County Council for approval of the City's Plan.

Often times the construction and/or maintenance of utility lines requires work within the road right-of-way (ROW) for roads in unincorporated King County. When a utility has a proposed project within unincorporated King County, please contact the King County Department of Transportation (KCDOT), Road Services Division, Engineering Services Section for coordination with the County's annual overlay program. Failure to do so may result in the denial of the permit to work within the ROW once an overlay of the road section has been completed. Although each utility has a set of construction standards and specifications for their projects, when construction and or maintenance of utilities requires work within the road ROW for roads in unincorporated King County, please be aware that the current edition of the King County Road and Construction standards apply to any installation or work in these ROWs. Not adhering to these standards could result in the installation of non-specified and approved methods and/or materials that are out of the specifications for King County, and could potentially add additional costs to the purveyor for future repairs or adversely affect acceptance of those repairs/installations. The KCDOT- 2007 King County Road Design and Construction

Standards can be found on the World Wide Web at http://www.kingcounty.gov/transportation/kcdot/Roads/EngineeringServices/RoadStandards2007.aspx

We look forward to seeing the final Plan and working with you to secure the King County Council's approval. The Council's action represents King County's final action on the Plan and is the statement of consistency under the Revised Code of Washington 43.20.260.

Finally and somewhat related to the water plan, our understanding is that the City has no water franchise for service in the County. My colleague in the Facilities Management Division, Real Estate Services will be contacting the City to discuss a water franchise.

If you have any questions or concerns about any of the information in the letter, please do not hesitate to call me at 206-477-5387.

Sincerely,

Stephen Hirschey
Chair, Utilities Technical Review Committee

Enclosure

cc: Richard Rodriguez, Regional Planner, Washington State Department of Health

City of Bellevue

Post Office Box 90012 • Bellevue, Washington • 98009 9012

October 9, 2014

Michele Campbell, P.E.
Project Manager
RH2 Engineering, Inc.
22722 29th Drive SE, Suite 210
Bothell, WA 98021

Dear Michele:

Thank you for the opportunity to review the draft City of Kirkland Comprehensive Water System Plan. We focused our review primarily on the parts of the plan that deal with the physical connections between our systems, or information about Bellevue and our systems. If any are not clear, please call me so we can discuss them further. I would be happy to meet with you to provide more information, if you like.

Bellevue's comments on the Plan are as follows:

Page 2-3: Is it accurate to say that Kirkland is the wholesale water purveyor to Rose Hill areas (isn't that Cascade/SPU)? Would it be more accurate to say that Kirkland wheels water to those customers?

Page 2-5: The 2nd paragraph provides a range of elevations in the shared 545 Zone. Bellevue's portion of the zone appears to fall inside this range. A cursory review of our model elevations indicates elevation 287 to 405.

Page 2-6:

- Talk with SPU about Cedar/Tolt operation. I don't think the CESSL is used to boost TESSL pressure during high demand as indicated, but may be generally only used in case of a Tolt shutdown (planned or unplanned). Consequently, this might be more likely to occur during low demands. The description of Cedar/Tolt operation in Chapter 6 is different and more consistent with my understanding.
- The joint-use inlets are given different names (S1, S2, S3) and show different meter sizes in the Plan than in the Rose Hill Agreement. It is not clear which one is which and if Bellevue would share costs for improvements. Please clarify.

Page 2-14: In the last paragraph, regarding the emergency intertie on 132nd Ave:

- The PRV is set to open at an HGL of approximately 628 (not 650) in Bellevue's Pikes Peak 670 Zone.
- DOH has approved the intertie (delete last sentence).
- The same comments apply to the second paragraph on Page 2-19.

Page 2-16: In the first paragraph, regarding the metered Kirkland-Bellevue intertie:

- Bellevue hasn't projected future demands for the Kirkland intertie specifically. I can't vouch for the 50% number. This intertie primarily feeds Bellevue's RH545 zone (about 25%-30% increase projected through 2040), but it also serves as a backup feed to the larger LH520 zone.
- The meter size is 6".
- The 3,500 gpm capacity sounds high. It's not clear whether this refers to the meter's accuracy range, actual capacity based on hydraulics, or something else.

Page 2-18: Description of Bellevue's system:

- Bellevue's service area is not confined to the municipal boundaries of Bellevue as indicated. Bellevue's direct retail service area (not wheeled) includes a portion of Kirkland in the vicinity of 116th Ave NE and NE 41st St (as shown in Figure 2-1) in addition to the entire cities of Clyde Hill and Medina, the towns of Hunts Point and Yarrow Point, and small portions of the City of Issaquah and unincorporated King County. Bellevue also wheels water to a separate portion of Issaquah on Cougar Mountain, the Overlake area of Redmond, and the Village of Beaux Arts through an emergency intertie (when demand exceed their well capacity).

Table 7-2:

- Page 2-16 says Bellevue demand will increase 50%, but this table only shows a 20% increase and then buildout.
- Note 2: Is the intent to say 2020 (not 2010)?

Appendixes:

- The SPU-Cascade agreement has been updated since the version in the Plan.
- The Kirkland-Bellevue agreement for the intertie on 132nd Ave NE is not included in the appendices. Attached is a copy.

General comments:

- The volume of Kirkland's South Reservoir available to Bellevue (1.5 MG) is adequate to meet projected buildout for our zone relying on this storage (RH545).
- The Sheffield Green development and All Saints Lutheran Church west of 148th Ave NE in Bellevue are "direct read" customers served directly by Kirkland's 545 zone (not through the master meter), separate from Bellevue's RH545 zone.

When the plan is complete, please provide (3) hard copies of the final plan (if available) to my attention at Bellevue Utilities. Again, please call if you have any questions. I hope this information is helpful.

Douglas Lane, PE
(425)452-6865
dlane@bellevuewa.gov

CityofRedmond
WASHINGTON

RECEIVED BOTHELL
RH2 ENGINEERING INC.
JOB NO:

OCT 18 2014

ROUTE TO: mc
FILE:

October 16, 2014

Ms. Michele Campbell, P.E.
RH2 Engineering, Inc.
22722 29th Drive S. E., Suite 210
Bothell, WA 98021

Subject: City of Kirkland 2014 Comprehensive Water System Plan
City of Redmond Comments

Dear Ms. Campbell:

The City of Redmond has reviewed and made comments on the 2014 City of Kirkland Comprehensive Water System Plan. Enclosed is a summary sheet of Redmond's comments, along with copies of the commented pages of the plan. Please call me at 425-556-2884 or email me at jthompson@redmond.gov with any questions regarding our comments. Also, please feel free to request a meeting to go over Redmond's comments in person. Thanks!

Sincerely,

Jeff Thompson

Jeff Thompson, P.E.
Senior Water/Wastewater Engineer

Enclosures: Comment Summary Sheet
Plan Pages with Comments

cc: Ms. Paige Igoe, P.E., Regional Engineer, DOH

City of Redmond Comment Summary Sheet

Page ES-2, 1st Paragraph, 4th Sentence: Kirkland is not a wholesaler of water to Redmond and Bellevue. CWA is the wholesaler, and Kirkland, Redmond, & Bellevue are joint owners of the supply stations.

Page 2-3, 5th Paragraph, 3rd Sentence: The Seattle contract is no longer valid, only the CWA contracts are valid. Therefore, Kirkland is not a water wholesaler to Redmond & Bellevue. (Redmond can meet with Kirkland & RH2 to discuss and show how Redmond's WSP explains this relationship.)

Page 2-14, 2nd Paragraph, 1st Sentence: These Redmond meters are not "Master Meters". They only measure water from one side of Redmond going to the other side of Redmond. They are billing meters.

Page 2-15, 3rd Paragraph, 1st Sentence: Same comment as above. Also, the end of the 1st sentence should read "Redmond's 335 Zone." (not 350 Zone)

Page 2-15, 4th & 5th Paragraphs: Change each "intertie" to "meter"

Page 2-16, 3rd Paragraph, 1st Sentence: Change "Redmond master meters" to "Redmond billing meters"

Figure 2-5: The Redmond Service Area is incorrect. Please see mark-ups.

Page 7-1, 1st Paragraph: What about Redmond's demands that receive water through Kirkland? Kirkland needs to get copies of both Redmond's and Bellevue's water models for their system evaluation including storage evaluation.

Page 7-3, 2nd Paragraph, last Sentence: Delete "Draft" after Redmond's 2011. Also, Does Bellevue have a more recent WSP than 1998 for Kirkland to use?

Page 7-9, Last Paragraph: Storage Evaluation is not calculated correctly. Redmond owns 34% of North tank and 29.4% of South tank top to bottom.

Page 7-11, Table 7-4: Operational & Fire Flow storage is shared. Also, see comment above.

Page 7-12, Table 7-5: See last 2 comments above.

Page 7-13, 3rd Paragraph: Need to include Redmond's water model to make sure shared facilities are adequate.

Page 8-16, Table 8-5: Laureling M. Ward's contact phone #s are 425-556-2819 & 360-271-4168 (not 425-444-2639)

Page 9-4, 4th Paragraph: Joint Board should decide project schedule for these projects.

Table 9-4, last section: Joint Board should decide when these projects should be scheduled.

Appendix B: The Interlocal Contract (December 15, 2004) is outdated. Most recent contract was voted on 10/26/2011.

Appendix C: The CWA – Seattle contract (10-2-2003) is outdated. Latest contract is dated July 15, 2013.

Plan Pages with Comments

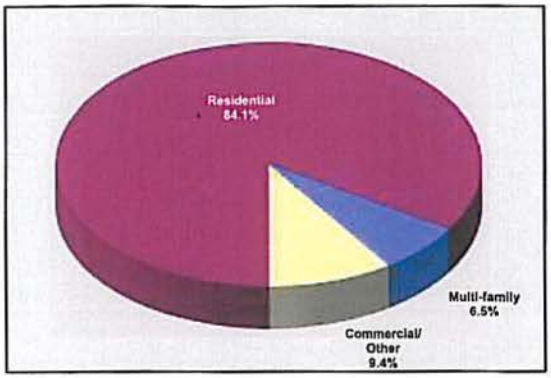

2013 Water Connections

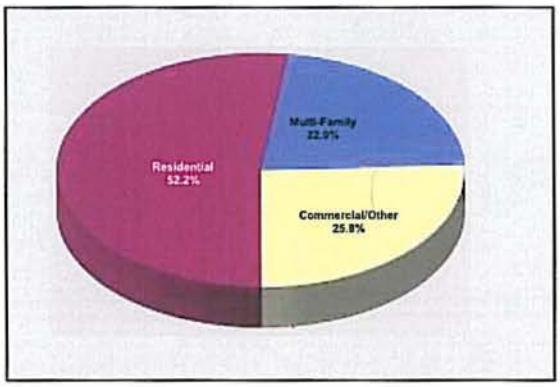

2013 Water Consumption

The City also operates several joint-use facilities that provide supply to areas of the City of Redmond (Redmond) and the City of Bellevue (Bellevue). All three cities are proportionally responsible for the cost of maintaining and operating the joint use facilities. This arrangement was agreed to during the Rose Hill Water District assumption in 1994. Under the assumption agreement, the City became a wholesaler of water to both Redmond and Bellevue. The areas of Bellevue and Redmond supplied by the joint-use facilities are all within the area served previously by the Rose Hill Water District. Under the agreement, the City is only required to supply a rate of supply proportional to each City's percent ownership in each joint-use supply facility as described in the assumption.

KIRKLAND IS NOT A WHOLESALER - REDMOND & BELLEVUE ARE JOINT OWNERS

Past Water Usage and Conservation

Total system-wide water usage has decreased approximately 5 percent from 2005 to 2013, primarily due to water use efficiency practices and an increase in the number of homes with water-efficient plumbing. During this same time period, the average amount of water demand per person has decreased from approximately 108 gallons per day in 2005 to approximately 89 gallons per day in 2013. The City's average per capita demand of 95 gallons per day from 2007 through 2013 and average demand per equivalent residential unit (ERU) of 189 gallons per day are slightly less than the average for the Puget Sound area. The amount of distribution system leakage in the City's system was 6 percent in 2013 based on a 3-year rolling average, which is below the standard established by the WUE Rule of 10 percent or less. The City's WUE Program presents a goal of saving 53,000 gallons per day annually from 2014 through 2019, based on the City's portion of Cascade Water Alliance's (Cascade) regional goal. Beyond 2020, the demand projections with WUE do not include additional water savings beyond the initial goal.

Future Water Demands and Water Supply

Overall water demand within the City's system is estimated to increase by up to 15 percent within the next 6 years and by up to 33 percent within the next 20 years, depending on future water use reductions due to the City's WUE Program and the rate at which growth actually occurs in the system. The City currently anticipates using its 3 existing Tolt Pipeline connections to meet the demand requirements of the system through the 20-year planning period. The capacity of these

WATER SERVICE AGREEMENTS

Water Service Area Agreement

All purveyors located within the East King County Critical Water Supply Service Area are required to have an agreement that identifies the external boundary of their water service area. The City updated its water service area agreement in 1997 as part of the 1996 East King County Coordinated Water System Plan Update. A copy of this agreement is contained in **Appendix A**.

Cascade Interlocal Contract and Declining Block Agreement

The City is a Cascade member. The Interlocal Contract between the City and Cascade, included in **Appendix B**, states that Cascade will provide a full supply commitment to the City for current and future water supply needs. Cascade shall provide for the necessary water system expansions and extensions to meet the needs of additional water customers of Cascade Members if the growth is consistent with applicable growth management plans.

In December 2003, Cascade signed a 50-year declining block agreement with the City of Seattle (Seattle). The City relinquished its individual contract with Seattle in favor of a contract between Cascade and Seattle. The agreement requires Seattle to provide water to Cascade through December 31, 2053, in decreasing amounts. In 2008, Cascade and Seattle approved amendments to the 50-year declining block agreement. The amended agreement increased the block of water Cascade is obligated to purchase by 3 million gallons from 2009 to 2017, and 5 million gallons from 2018 to 2023. In October 2005, Cascade signed a supply agreement with Tacoma Public Utilities to provide additional supply to its members. It is the intent of Cascade to continue to procure other sources of water as time progresses to meet the demands of its members. Water will continue to be provided to the City from the existing supply stations. A copy of Cascade's contract with Seattle is contained in **Appendix C**. A copy of Cascade's contract with Tacoma Public Utilities is also contained in **Appendix C**.

Joint-use Agreement

The City, Redmond, and Bellevue share several joint-use facilities that include the 3 supply stations, a 14.3 MG reservoir, an 11.2 MG reservoir, 2 booster pump stations, 4 normal supply interties, pressure reducing stations, and several transmission mains. The City provides all operations, maintenance and control of the joint-use facilities in accordance with the *Interlocal Operation and Maintenance Agreement*, which is included in **Appendix D**.

Water supply is provided to the City by Cascade through Seattle's pipelines. The same three supply stations that provide supply to Kirkland also provide supply to Redmond and Bellevue customers located within the boundaries of the former Rose Hill Water District. Since the Seattle Water Purveyor Contract was assigned to the City as part of the Rose Hill Assumption, the City is the wholesale purveyor of water to these areas of the Cities of Redmond and Bellevue. Cascade bills the City for water supplied to the three cities through Supply Stations S1, S2, and S3, and the City in turn bills Redmond and Bellevue for their consumed portion of the total water supply. Per the Joint-use Agreement each city also holds a seat on the Joint Board, which was established to ensure the joint facilities are operated and maintained in a manner that is satisfactory to each city. The Joint Board meets on a regular basis to discuss issues pertaining to the joint facilities owned by the board members. Currently, the ownership of Supply Station S1 is 57.2 percent by Kirkland, 29.4 percent to

SEATTLE CONTRACT NO LONGER VALID, ONLY CWA CONTRACTS VALID. THEREFORE, KIRKLAND IS NOT A WHOLESALER TO REDMOND & BELLEVUE.

REDMOND CAN MEET WITH KIRKLAND & RH2 TO DISCUSS AND SHOW HOW REDMOND'S WSP EXPLAINS THIS RELATIO

Redmond and 13.4 percent to Bellevue. The ownership of Supply Station S2 is 66 percent to Kirkland and 34 percent to Redmond. The ownership of Supply Station S3 is also 66 percent to Kirkland and 34 percent to Redmond. Each city reads customer meters within their respective service area.

SATELLITE SYSTEM MANAGEMENT

A Satellite System Management Agency (SSMA) is defined as a person or entity that is certified by the Washington State Department of Health (DOH) to own or operate more than one public water system without the necessity for a physical connection between such systems. SSMAs were created to stop the proliferation of small water systems, many of which could not meet federal and state water quality and water system planning regulations. Based on the success of SSMAs, DOH made recommendations to the legislature to include rules for designating entities as qualified SSMAs.

In July 1995, Senate Bill 5448 became law, governing approval of new water systems and setting forth requirements for SSMAs. The goal of the law is to ensure that the people of Washington State will receive safe and reliable water supplies in the future from professionally managed or properly operated water systems. SSMAs can provide three different levels of service:

1. Ownership of the satellite system;
2. Operations and management of the satellite system; or
3. Contract services only.

The service can be provided to new systems, existing systems that are no longer viable, or existing systems placed into receivership status by DOH.

The City is responsible for providing water service to all customers in the City's water service area defined in the East King County Coordinated Water System Plan. Currently, no small water systems exist within the City's water service area. All of the areas surrounding the City's service area are currently being served by large, stable water systems that are unlikely to be future satellite water systems operated by the City.

In the event that a neighboring water system needs the City's assistance, the City will cooperate to provide the necessary satellite management services. Upon agreement between the two systems, the City will pursue the necessary steps to become an approved SSMA. These include:

- Submitting a notice of intent to the DOH;
- Participating in a pre-submittal meeting with the DOH;
- Submitting a SSMA plan to the DOH that meets the plan requirements; and
- Obtaining approval of the plan from the DOH.

INVENTORY OF EXISTING WATER FACILITIES

This section provides a detailed description of the existing water system and the current operation of the facilities. The analysis of the existing water facilities is presented in **Chapter 7**. Additional information on the City's existing water system facilities is included in **Appendix E** and on the DOH Water Facilities Inventory (WFI) form in **Appendix F**.

stations serve the 395 Zone from the 450 Zone, and one pressure reducing station serves the 395 Zone from the 545 Zone. Three pressure reducing stations serve the 315 Zone from the 450 Zone, while the 285 Zone is served by nine pressure reducing stations from the 450 Zone and by two pressure reducing stations from the 315 Zone. The 285 Zone in the Totem Valley assumption area is served by two pressure reducing stations from the 395 Zone. All of the City's pressure reducing stations are located in underground vaults. Fifteen of the City's pressure reducing stations are equipped with pressure relief valves. All of the pressure zones supplied by pressure reducing stations have pressure relief capabilities, with the exceptions of the City's 510 Zone and 590 Zone. A list of all pressure reducing stations and related data is contained in **Appendix E**.

Master Meters

The City's water system has a total of eight master meters (not including the meter at each supply station), four of which the City operates. Three of the master meters are operated by Redmond (R1, R3, and R4) and the remaining master meter (B1) is operated by Bellevue. The master meters operated by the City are K1, K2, K3, and K4, as shown in plan view in **Figure 2-1** and in profile view in **Figures 2-2A** and **2-2B**. The City's master meters are located along the I-405 corridor at each of the four freeway crossings of the transmission mains and measure flow entering the City's system on the west side of I-405.

THESE REDMOND METERS ARE NOT "MASTER METERS". THEY ONLY MEASURE WATER FROM ONE SIDE OF REDMOND GOING TO THE OTHER SIDE OF REDMOND.

Water System Interties

Water system interties are physical connections between two adjacent water systems. Interties are normally separated by a closed isolation valve or control valve. Emergency supply interties provide water from one system to another during emergency situations only. An emergency situation may occur when a water system loses its main source of supply or a major transmission main, or during firefighting situations, and is unable to provide a sufficient quantity of water to its customers. Normal supply interties provide water from one system to another during non-emergency situations and are typically supplying water at all times.

Emergency Supply Interties

The City's water system has two emergency interties with Bellevue. One intertie with Bellevue is at approximately NE Northup Way and 104th Avenue NE, as shown in **Figure 2-1**. The intertie connects Kirkland's 285 Zone with Bellevue's 400 Zone. The emergency intertie consists of an 8-inch isolation valve that is normally closed and must be manually opened to flow water. Due to the difference in hydraulic elevation of the two pressure zones, the emergency intertie will only flow water into the City's system. Since the water from Bellevue's 400 Zone is approximately 49 pounds per square inch (psi) higher than the water in the City's 285 Zone, the 285 Zone could be over-pressurized, causing one of the pressure relief valves in the 285 Zone to open and discharge water if the intertie is opened too much. Because there is no means of moving water from the 285 Zone to the upper zones in the City's water system, the benefits of this intertie are limited to emergency supply for the 285 Zone only.

The second intertie with Bellevue is at the intersection of 132nd Avenue NE and NE 60th Street. The purpose of this intertie is to provide fire flow to Bellevue's service area in the event of an emergency. The intertie is controlled with a pressure reducing valve that will only open when pressure on Bellevue's side of the valve drops below a gradient of 650 feet. Construction of the intertie was completed in the summer of 2012 and is currently operational. Bellevue has not completed final application and approval of the intertie with DOH.

The City also has two existing emergency interties with NUD in the Totem Lake area, as shown in **Figure 2-1**. One intertie is located at the NE Totem Lake Way dead end, and connects NUD's 380 Pressure Zone to the City's 395 Pressure Zone. NUD and the City are currently in the process of finalizing a formal agreement for this intertie which will require that either party notify the other at least 12 hours prior to receiving water through the intertie. The intertie is capable of supplying either water system in an emergency.

A second intertie with NUD, located at approximately NE 118th Street and 115th Avenue NE, was constructed in 2012 and connects NUD's 366 Pressure Zone to the City's 450 Pressure Zone. The intertie consists of an 8-inch-diameter water main, a fire hydrant, and two normally closed valves, and is capable of supplying the City or NUD in an emergency. The agreed operation of the emergency intertie is contained in the *Interlocal Agreement with Northshore Utility District*, a copy of which is contained in **Appendix T** of this WSP.

~~Metered Interties (Master Meters)~~ BILLING METERS

THESE ARE NOT "INTERTIES" OR "MASTER METERS", THEY ARE "BILLING METERS".

Redmond has three metered interties along the Sammamish River that supply water from the Redmond service area of the Kirkland/Redmond/Bellevue supply system west of the river to Redmond's well service area east of the river during periods of high demand. Meter station R1, located at NE 51st Street and West Lake Sammamish Parkway NE, is in Redmond's ~~350~~ 335 Zone. The station has a 6-inch meter and 8-inch supply-side water main with an estimated capacity of approximately 1,600 gpm. Meter station R3, located at Leary Way NE east of the Sammamish River, is in Redmond's 285 Zone. The station has an 8-inch meter and 8-inch supply-side water main with an estimated capacity of approximately 1,600 gpm. Meter station R4, located at NE 85th Street west of the Sammamish River, is in Redmond's 285 Zone. The station has an 8-inch meter and 12-inch supply-side water main with an estimated capacity of approximately 3,500 gpm. The estimated capacities of these meter stations are based on the maximum carrying capacity of the supply-side water mains and not the entire system's capability to provide these flow rates. Therefore, the actual capacities may be less and will most likely vary throughout the year as demands in the Kirkland/Redmond/Bellevue supply area vary. The City provides direct water supply to Redmond water service customers located between the City's system and the Redmond ~~master~~ BILLING meters. The customer meters are read by Redmond and water use is reported to the City for consumption tracking and billing purposes.

The Redmond ~~metered interties~~ BILLING METERS are manually operated by Redmond under a pre-arranged agreement that requires Redmond to notify the City of its intent to open the ~~interties~~ meters prior to water being supplied through the ~~interties~~ meters. The intertie agreement does not identify the capacity of the interties or the maximum amount that Redmond can use. However, as part of the advance notification requirement, Redmond is required to provide the City with an estimated amount of water to be obtained from the ~~intertie~~ meter for that day. This enables the City to evaluate the capability of the system to provide the amount of water requested by Redmond and approve withdrawal of the requested amount only if it will not have an adverse impact on the overall system. As demands in both the City's and Redmond's systems increase in the future, it is expected that the amount of water that these ~~interties~~ meters can provide will decrease without having adverse impacts on other parts of the system.

The source of supply to the three ~~interties~~ meters is currently provided by Supply Stations S1 and S2, and the South Reservoir. Therefore, if flows through the ~~interties~~ meters are increased in the future, the result will be an increased demand on these three facilities.

Bellevue has one metered intertie located adjacent to the Redmond service area at NE 60th Street and 140th Avenue NE. The meter station, known as B1, has an 8-inch meter and is connected to the 545 Zone with a 16-inch transmission main to convey Bellevue's portion of the joint-use storage from the South Reservoir into the Bellevue water system. The station has an estimated capacity of approximately 3,500 gpm. The future demand of the Bellevue system for water supply from this intertie is expected to increase by approximately 50 percent beyond the current demand levels. The increase in demand is still well below the estimated capacity of 3,500 gpm. The primary purpose of this intertie is to provide Bellevue with additional emergency storage provided by the joint-use South Reservoir. This meter station and Redmond's meter stations are shown on the hydraulic model node diagrams contained in **Appendix G**.

Telemetry and Supervisory Control System

Successful operation of any municipal water system requires gathering and using accurate water system information. A telemetry and supervisory control system gathers information and can efficiently control a water system by automatically optimizing facility operations. A telemetry and supervisory control system also provides instant alarm notification to operations personnel in the event of equipment failure, operation problem, fire or other emergency situations.

The City's telemetry system consists of a master telemetry unit and computer-based data logger located at the City's Maintenance Center and remote telemetry units located at the sites of the following facilities: Supply Stations S1, S2 and S3; the North and South Reservoirs; the Albertson's Pressure Reducing/Transfer Station T-1; Kirkland Pressure Station P1; Kirkland K1, K2, K3 and K4 master meters; the Redmond ~~master~~ BILLING meters; and the Bellevue master meter. The Kirkland master meters are located along the I-405 corridor at each of the four freeway crossings of the transmission mains and measure flow entering Kirkland's system on the west side of I-405. Pressure Station P1 measures the pressure in the 395 Zone at approximately NE 116th Street on the east side of I-405.

The existing remote telemetry units communicate with the master telemetry unit using a frame relay system. The master control computer allows water system operators to access the control set points of each facility and modify these set points using the computer's keyboard and mouse. The following hydraulic parameters are logged and monitored at the master control computer.

- **Supply Stations S1 – S3:** Seattle supply system pressure, 545 Zone pressure and flow rate.
- **North Reservoir:** Reservoir level, reservoir inflow rate, and reservoir outflow rate (during pump station operation).
- **North Reservoir 545 Zone Pump Station:** Suction pressure, discharge pressure, and flow rate.
- **South Reservoir:** Reservoir level and reservoir inflow rate (on one of two inlets).
- **650 Zone Pump Station:** Suction pressure, discharge pressure, and flow rate.
- **Albertson's Pressure Reducing/Transfer Station T-1:** Flow rate.
- **Pressure Station P1:** Pressure.
- **Kirkland Meters K1 through K4:** Flow rate.

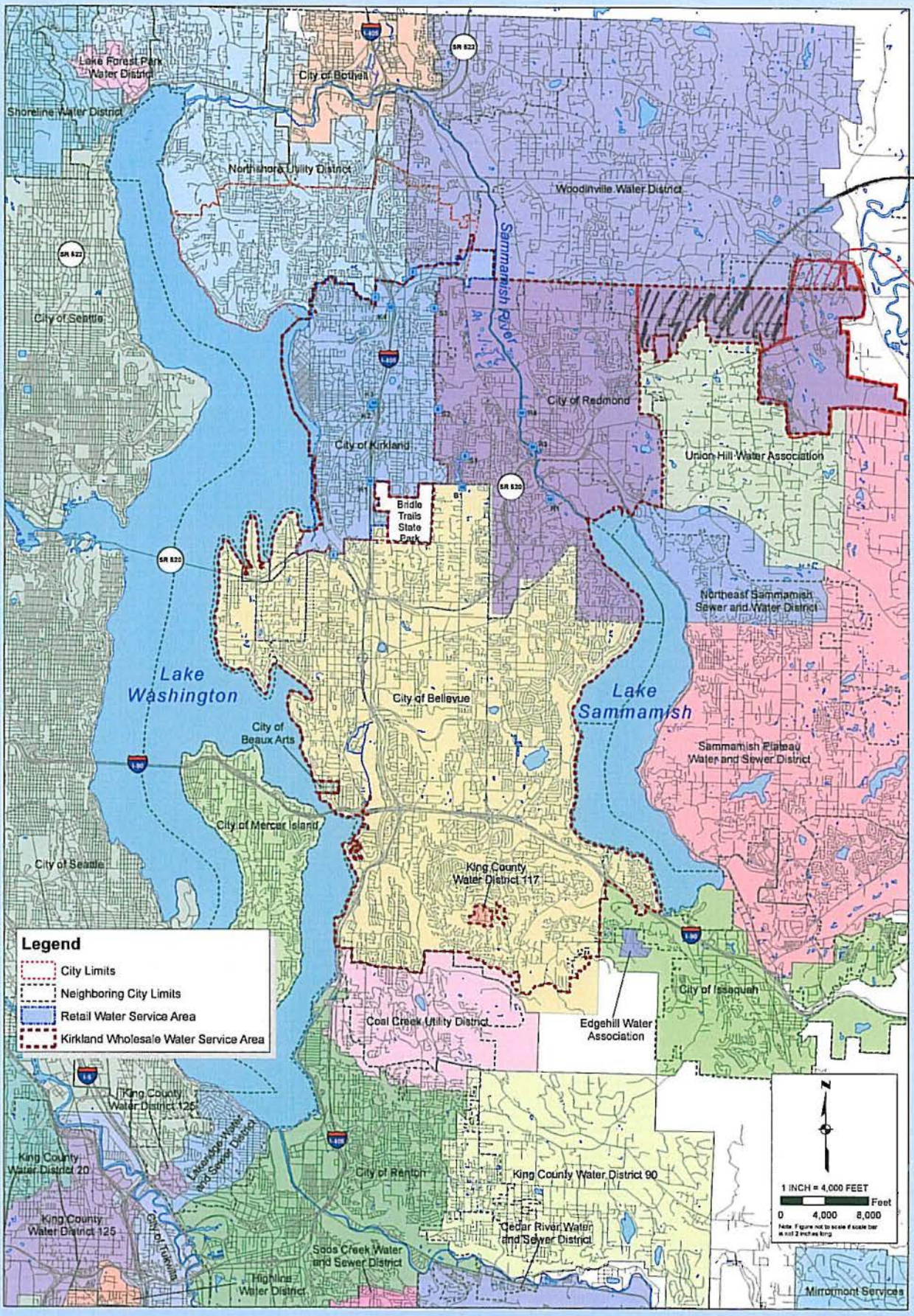

NOT REDMOND'S SERVICE AREA

INCLUDED IN REDMOND'S SERVICE AREA

Figure 2-5

Adjacent Water Systems

City of Kirkland

2014 Comprehensive Water System Plan

Modified: August 21, 2014

J:\Data\Kir\112-051\CAD\GIS\maps\Fig2-5_AdjPurv.mxd By: kchristensen

Water System Analysis

7

WHAT ABOUT REDMOND DEMANDS THAT RECEIVE WATER THRU KIRKLAND?

KIRKLAND SHOULD GET COPIES OF BOTH REDMOND'S & BELLEVUE'S WATER MODELS FOR THEIR SYSTEM EVALUATION. INCLUDING STORAGE EVALUATION.

INTRODUCTION

This chapter, which presents the analysis of the City of Kirkland's (City) existing water system, was originally prepared as part of the City's 2007 Water System Plan (WSP). The City's existing demands have decreased since the preparation of the City's 2007 WSP, which used 2004 demands as the baseline demands. Because demands have decreased, the existing and future system supply and hydraulic analyses presented in the City's 2007 WSP are conservative, and are duplicated in this 2014 WSP for the existing, 6-, 10-, and 20-year analyses. Although the City's demands have decreased, the computed number of equivalent residential units (ERUs) has increased, and the storage and system capacity analyses have been updated to reflect these increases.

Individual water system components were analyzed to determine their ability to meet policies and design criteria under both existing and future water demand conditions. The policies and design criteria are presented in **Chapter 5** and the 2014 through 2035 water demands are presented in **Chapter 4**. A description of the water system facilities and their current operation is presented in **Chapter 2**. Proposed improvements that resolve the deficiencies identified in this chapter are presented in **Chapter 9**. The last section of this chapter presents the existing system capacity analysis that was performed to determine the maximum number of ERUs that can be served by the City's water system.

PRESSURE ZONES

The ideal static pressure of water supplied to customers is between 40 and 80 pounds per square inch (psi). Pressures within a water distribution system are commonly as high as 150 psi, requiring pressure regulators on individual service lines to reduce the pressure to 80 psi or less. It is difficult for the City's water system (and most others) to maintain distribution pressures between 40 and 80 psi, primarily due to the topography of the water service area.

Table 7-1 lists each of the City's eight pressure zones, the highest and lowest elevation served in each zone, and the minimum and maximum distribution system pressures within each zone, based on maximum static water conditions (full reservoirs and zero demands). The City is currently providing water at pressures of at least 32 psi throughout the entire water system, as shown in the table. This is below the preferable range of 40 to 80 psi, but is higher than the Washington State Department of Health (DOH) minimum requirement of 30 psi. The lowest pressures in the distribution system occur at the intersection of 3rd Street and 13th Avenue. The highest pressures in the distribution system occur on the north side of the 450 Zone, on 116th Avenue NE near the boundary of the 395 Zone south of NE 124th Street. The services at this location, as well as services in other pressure zones, have static pressures greater than 80 psi. All water services in these high pressure areas have individual pressure reducing valves to reduce the service pressure to 80 psi or less. Additionally, the City requires individual pressure reducing valves on all new services. Also shown in the table are the areas of the City of Redmond's (Redmond) water service area supplied directly by the City's jointly-owned facilities.

Supply Analysis

Supply Station S1 provides water directly into the 545 Zone, which in turn fills the North Reservoir and South Reservoir and supplies the lower pressure zones. Supply Station S2 provides water directly into the 545 Zone, which will also fill the North Reservoir and South Reservoir and supply the lower pressure zones. Supply Station S3 provides water directly into the 545 Zone and the 650 Zone when the hydraulic grade in the Tolt line is high enough. Water is pumped from the Tolt line into the 545 Zone when the hydraulic grade at Supply Station S2 is below 545 feet. All of the supply stations are jointly owned, with the percentage of ownership assigned in the Rose Hill Water District Assumption Agreement. These contractual amounts were used to determine the amount of supply available to the City. Since all pressure zones in the system normally receive water from all three supply stations, the supply analyses are based on an evaluation of the existing supply facilities providing water to the system as a whole.

Table 7-2 summarizes the current and future water supply requirements of the Kirkland/Redmond/Bellevue supply area, as well as the City's water system. The existing water supply evaluation is based on 2004 supply requirements (i.e., demands) and current supply capacities of the facilities. The supply capacities of Supply Station S1 and Supply Station S3 are based on maximum allowable water velocities through the piping and valves at the stations. The supply capacity of Supply Station S2 is based on the capacity of the station's pumps. The future water supply evaluation is based on future 6-year, 10-year, and 20-year development supply requirements (i.e., projected demands) and current supply capacities of the facilities. The demands for the City used in the evaluation are future demand projections without reductions from water use efficiency (WUE) efforts, as shown in **Table 4-11** of **Chapter 4**. Therefore, if additional reductions in water use are achieved in the future through WUE efforts, the total supply required in the future will be less than that ~~shown in~~ **Table 7-2**. Demands for the City of Bellevue (Bellevue) are consistent with estimates made for the City's 1998 Comprehensive Water System Plan, while demands for the City of Redmond are from Redmond's 2011 ~~Draft~~ Comprehensive Water System Plan.

DOES BELLEVUE HAVE A MORE RECENT WSP?

The results of the water supply evaluation indicate that the City currently has approximately 4,309 gallons per minute (gpm) of excess supply capacity based on 2004 demand levels. **Table 7-2** also indicates that the existing supply facilities are sufficient to meet the demands of existing and future customers through 2035. It is estimated that the City will have approximately 5,454 gpm of excess supply capacity if the growth projections are realized; there will be additional excess supply if WUE efforts are successful.

existing and future storage analyses that follow. This calculation determined the standby storage volume required for the City's operating area.

The areas of highest elevation directly served by each tank lie within the City's water service area. The South Reservoir serves the City's 545 Zone and Redmond's 545 Zone directly, while the North Reservoir serves the City's 450 Zone directly and Redmond's 395 Zone and 285 Zone via a transmission main and PRV. Therefore, the controlling elevations for standby, fire flow, equalizing, and dead storage lie within the City's water service area.

Fire Flow Storage – Volume of the reservoir used to supply water to the system at the maximum rate and duration required to extinguish a fire at a building with the highest fire flow requirement. The magnitude of the fire flow storage is the product of the fire flow rate and duration of the system's maximum fire flow requirement, as established by the local fire protection authority. The DOH requires that fire flow storage be stored above an elevation that will provide a minimum pressure of 20 psi at all service connections throughout the system under MDD conditions. The fire flow storage requirements shown in the evaluation that follow are based on a 5,000 gpm fire flow rate and 5-hour duration. In addition, the fire flow and standby storage components were not consolidated, as shown in the storage evaluation tables.

Dead Storage – Volume of the reservoir that cannot be used, because it is stored at an elevation that does not provide system pressures that meet the minimum pressure requirements established by the DOH, without pumping. This unusable storage occupies the lower portion of most ground-level reservoirs. Water that is stored below an elevation that cannot provide a minimum pressure of 20 psi is considered dead storage for the analyses that follow.

Storage Analysis

Similar to the supply facility analysis, the storage analyses are based on an evaluation of the existing reservoirs providing water to the system as a whole, including Bellevue and Redmond, since water from either reservoir may be utilized by any zone in the system through PRVs or booster pump stations. The demands used in the evaluation of future storage requirements are future demand projections without reductions from WUE efforts, as shown in **Table 4-11** of **Chapter 4**.

Existing Storage Evaluation

STORAGE EVALUATION IS NOT CALCULATED CORRECTLY. REDMOND OWNS 34% OF NORTH TANK & 29.4% OF SOUTH TANK TOP TO BOTTOM.

Table 7-4 summarizes the results of the water storage evaluation for the existing system, based on 2004 storage requirements (i.e., demands) and existing storage capacities of the reservoirs. The maximum combined storage capacity of the two reservoirs in the City's system is 25.5 MG, as shown in **Table 7-4**. However, both reservoirs are joint-use facilities. The amount of storage available to the City is based on the percent ownership the City has in the reservoirs. The City's ownership in the North Reservoir is 66 percent; Redmond's ownership is 34 percent; and Bellevue's ownership is 0 percent. The City's ownership in the South Reservoir is 57.2 percent; Redmond's is 29.4 percent; and Bellevue's is 13.4 percent. The City's 14.3 MG North Reservoir contains approximately 4.89 MG of dead storage (i.e., non-usable storage). Therefore, the capacity of the reservoirs is decreased to 20.61 MG of storage that may be utilized as usable storage for operational, equalizing, standby, and fire flow purposes. The standby storage component is the only component that changed from the City's 2007 WSP, which increased based on the DOH recommendation that the minimum standby storage volume be no less than 200 gallons per ERU. **Table 7-4** was developed based on each city's percent ownership in each storage facility and the available (i.e., non-dead) storage in each storage facility. Each city is assumed to have a stake in the operational storage

volume proportional to its ownership in that facility. The Joint Board will discuss strategies to utilize the tanks to best serve all of the water systems at their regular meetings. As a conservative measure, the amount of storage allotted to Bellevue and Redmond is subtracted to arrive at the total storage available to the City. It is assumed that each city will determine what uses are applied to its storage available in the joint-use facilities (e.g., Redmond will determine how to assign its 6.49 MG of storage independently of the City). Accordingly, the surplus or deficient storage amounts shown in the table are for the City only. The results of the existing water storage evaluation indicate that the City has adequate storage to meet existing demands. As shown in **Table 7-4**, the City has an additional 3.20 MG of storage that could be allocated to standby storage in an emergency. If all supply sources could not operate, the City could have a total of 7.16 MG of storage to use as standby storage. Based on ADDs, this would be 2.00 days of standby storage.

OPERATIONAL & FIRE FLOW STORAGE IS SHARED

Table 7-4
Existing Storage Evaluation

Description	Existing System
Available/Usable Storage (MG)	
Maximum Storage Capacity	25.50
Dead (Non-usable) Storage	-4.89
Total Available Storage	20.61
Redmond Usable Storage[1]	-6.49
Bellevue Usable Storage[1]	-1.50
Total Storage Available to Kirkland	12.62
Operational Storage (MG)	
Redmond Operational Storage[1]	0.93
Bellevue Operational Storage[1]	0.21
Kirkland Operational Storage[1]	1.81
Required Storage for Kirkland (MG)	
Operational Storage	1.81
Equalizing Storage	2.14
Standby Storage[2]	3.96
Fire Flow Storage	1.50
Total Storage Required for Kirkland	9.42
Surplus or Deficient Storage for Kirkland (MG)	
Kirkland's Surplus or Deficient Amt.	3.20

(1) Operational and Usable Storage amounts are based on each city's ownership in joint-use reservoirs and the typical reservoir draw-downs.

(2) Standby storage is only value that changed from 2007 WSP.

34%

O	
E	
F	
ST	
D	

Future Storage Evaluation

Future storage requirements of the system were computed for the 6-, 10-, and 20-year planning periods, and were based on year 2020, 2025, and 2035 demand projections, respectively. The analyses were performed to determine the adequacy of the City's existing reservoirs to meet storage requirements in the future. As shown in **Table 7-5**, no additional storage facilities will be required through 2035. **Table 7-5** was developed with the same criteria listed for **Table 7-4**. If all supply sources could not operate, the City would have a total of 6.66 MG of storage to use as standby storage based on 2035 projections. Based on projected 2035 ADDs, this would be 1.29 days of standby storage. Between 2020 and 2035, the standby storage requirement increases due to the projected increase in ERUs.

Table 7-5
Future Storage Evaluation

Description	Future Projections[1]		
	2020 (+6 yrs)[1]	2025 (+10 yrs)[1]	2035 (+20 yrs)[1]
Available/Usable Storage (MG)			
Maximum Storage Capacity	25.50	25.50	25.50
Dead (Non-usable) Storage	-4.89	-4.89	-4.89
Total Available Storage	20.61	20.61	20.61
Redmond Usable Storage[2]	-6.49	-6.49	-6.49
Bellevue Usable Storage[2]	-1.50	-1.50	-1.50
Total Storage Available to Kirkland	12.62	12.62	12.62
Operational Storage (MG)			
Redmond Operational Storage[2]	0.93	0.93	0.93
Bellevue Operational Storage[2]	0.21	0.21	0.21
Kirkland Operational Storage[2]	1.81	1.81	1.81
Required Storage for Kirkland (MG)			
Operational Storage	1.81	1.81	1.81
Equalizing Storage	2.31	2.41	2.65
Standby Storage[3]	4.38	4.60	5.06
Fire Flow Storage	1.50	1.50	1.50
Total Storage Required for Kirkland	10.00	10.33	11.02
Surplus or Deficient Storage for Kirkland (MG)			
Kirkland's Surplus or Deficient Amt.	2.62	2.29	1.60

(1) Projections are based on growth within the City's water service area.

(2) Operational and Usable Storage amounts are based on each city's ownership in joint-use reservoirs and the typical reservoir draw-downs.

(3) Standby storage is only value that changed from 2007 WSP.

Facility Deficiencies

Both of the City's reservoirs are in good condition. The reservoirs should continue to undergo routine maintenance to keep them functioning properly.

DISTRIBUTION AND TRANSMISSION SYSTEM

This section evaluates the City's existing distribution and transmission system (i.e., water mains) to determine if they are sized and looped adequately to provide the necessary flow rates and pressures

to meet the existing and future requirements of the system. This section, which has been updated for this WSP, also identifies deficiencies that are unrelated to the capacity of the water mains.

Analysis Criteria

Distribution and transmission water mains must be capable of adequately and reliably conveying water throughout the system at acceptable flow rates and pressures. The criteria used to evaluate the City's distribution and transmission system are the state mandated requirements for Group A water systems contained in WAC 246-290-230, Distribution Systems. The pressure analysis criteria states that the distribution system "...shall be designed with the capacity to deliver the design peak hour demand quantity of water at 30 psi under peak hour demand flow conditions measured at all existing and proposed service water meters." It also states that if fire flow is to be provided, "... the distribution system shall also provide maximum day demand plus the required fire flow at a pressure of at least 20 psi at all points throughout the distribution system."

Hydraulic analyses of the existing system were performed under existing peak hour demand conditions to evaluate its current pressure capabilities and to identify existing system deficiencies. The existing system was also analyzed under existing MDD conditions to evaluate the current fire flow capabilities and to identify additional existing system deficiencies. Additional hydraulic analyses were then performed with the same hydraulic model under future MDD conditions and with proposed improvements to demonstrate that the identified improvements will eliminate the deficiencies and meet future requirements. Following is a description of the hydraulic model and the operational conditions and facility settings used in the analyses.

Hydraulic Model

Description

NEED TO INCLUDE REDMOND'S WATER MODEL TO MAKE SURE SHARED FACILITIES ARE ADEQUATE

A computer-based hydraulic model of the existing water system was created in 1996 using Cybernet for the City's 1998 WSP. The model was converted for the purposes of the 2007 WSP to version 8.0 of the WaterGEMS program, developed by Bentley Systems, and was subsequently updated in version 8i of WaterGEMS for this WSP. All facilities and water mains in the City's water system, including dead-end mains, were modeled using current data. The water mains were entered from AutoCAD water system maps and as-built records provided by the City. Elevation data for the model's junction nodes were electronically extracted from digital contour maps provided by the City. Joint facility mains between the supply stations and master meters were entered into the model based on available records. Water mains outside of the City's retail service area and not owned or maintained by the City were included in the model but not analyzed for deficiencies for the purposes of this WSP. A hydraulic model node diagram that provides a graphical representation of the model of the existing water system is contained in **Appendix G**.

Demand Data

The hydraulic model of the existing system contains 2013 ADD data. Consumption data from 2009 metered billing records were distributed based on the recorded usage for each parcel to the closest representative junction node of the model, which was then uniformly scaled to match the 2013 supply data. Peaking factors shown in **Chapter 4** were used to analyze the system under PHD and MDD conditions.

Table 8-5
Utility and Agency Contacts

Utility Contacts			
Agency	**Contact**	**Phone**	**Address**
City of Redmond Water	Laurelin M. Ward	425-556-2819 ~~425-444-2639~~ 360-271-4168	15670 Northeast 85th Street Redmond, WA 98052
City of Bellevue Water	Andy Tuchscherer	425-452-6469	Bellevue, WA
City of Bellevue Service Center	Operations (24-hour)	425 452-7840	2901 115th Ave NE Bellevue, WA 98004
Northshore Utility District	Operations (24-hour)	425-398-4403 425-398-4400	6830 Northeast 185th Street Kenmore, WA 98028
Seattle Public Utilities	Water Quality	206-684-7406 206-684-5941	Seattle, WA
Seattle Public Utilities	Supply Station Meters	206-386-1513	Seattle, WA
Seattle Public Utilities	Operations (24-hour)	206-386-1818	Seattle, WA
Woodinville Water District	Operations (24-hour)	425-483-9104	17238 NE Woodinville Duvall Rd. Woodinville, WA 98072
Agency Contacts			
Agency	**Contact**	**Phone**	**Address**
Washington State Department of Health	Paige Igoe, P.E. Regional Engineer	253-395-6764	Northwest Drinking Water 20435 72nd Ave S, Ste 200 Kent, WA 98032-2358

Material Readiness

Some critical repair parts, tools, and equipment are on-hand and kept in fully operational condition. As repair parts are used, they are re-ordered. Inventories are kept current and adequate for most common emergencies that can reasonably be anticipated. The City has ready access to an inventory of repair parts, including parts required for repair of each type and size of pipe within the service area. Additionally, the City has been provided with after-hours emergency contact phone numbers for key material suppliers, which gives the City 24-hour access to parts not kept in inventory.

Emergency Response Plan and Vulnerability Assessment

An Emergency Response Plan (ERP) has been prepared as part of the City's Vulnerability Assessment (VA) Plan. The ERP, which was completed in 2004, contains a contingency operation plan for responding to emergency events, a list of water personnel responsible for making decisions in emergency situations, and other elements. The ERP and VA Plan are exempt from public disclosure under the provisions of RCW 42.56.210. These plans are available for review by authorized personnel on a need-to-know basis. A copy of the City's Seismic Vulnerability Analysis and Earthquake Response Plan is included in **Appendix Q** of this WSP.

CIP M4: Comprehensive Water System Plan Update

Deficiency: The Washington Administrative Code (WAC) 246-290-100 requires that the City's WSP be updated every 6 years and submitted to the Washington State Department of Health (DOH) for approval. It is anticipated that WSP updates will only be required every 10 years in the future.

Improvement: Update the WSP every 10 years or as required by DOH.

CIP M5: Emergency Sewer Program Water Main Replacement Program

Deficiency: A large portion of the system contains AC, galvanized, and PVC water main that is old and prone to problems. The City desires to coordinate the replacement of deficient water mains with sewer line construction when possible to reduce construction costs.

Improvement: Replace AC, galvanized, and PVC water main as needed and in coordination with sewer main improvements. An amount of $50,000 every 2 years has been allotted for this project. This improvement includes water main projects that are specifically identified in the **Water Main Improvements** section of this chapter and is intended to allow the City to replace water mains not necessarily scheduled for replacement in those years but are in the vicinity of sewer projects constructed in those years.

CIP M6: Vulnerability Analysis Implementation

Deficiency: The City's Vulnerability Analysis identified several improvements to better protect the City's water infrastructure from malicious acts. Efforts continue towards completing those improvements.

Improvement: Implement improvements identified in City's Vulnerability Analysis.

Joint-use Facility Improvements

The cost of proposed joint-use facility improvements will be shared among the Cities of Kirkland, Redmond, and Bellevue in proportion to their ownership in the facility according to the Rose Hill Assumption Agreement contained in **Appendix E**. All joint-use facility improvements will be discussed and approved by the Joint Board prior to being constructed. — BOARD SHOULD ~~SCHEDULE~~ DECIDE PROJECT SCHEDULE FOR THESE PROJECTS.

CIP J1: Supply Station S3 Replacement

Deficiency: The existing supply station consists of a small below-grade vault with 3-inch and 10-inch control valves, a flow meter, and telemetry equipment. The vault does not have a drain and commonly has water in the bottom. The vault does not have lighting, heating, or ventilation. Access into the vault is through the top hatch using a standard wall-mounted vault ladder. Space inside the vault is limited and makes equipment maintenance tasks difficult. The piping and control valves are not sized properly to maximize the flow capability of the station or minimize pipeline velocities during peak demands.

Improvement: Replace the existing station with a new below-grade station that resolves the deficiencies identified above. The physical location and additional supply points of the station may be revised during the design of the improvement. The Joint Board should decide the final configuration prior to construction.

CIP J2: North Reservoir Pump Station Replacement

Deficiency: The existing below-grade pump station does not have heating or ventilation. The poor layout of piping and equipment inside the station makes it difficult to perform maintenance and operation tasks. The reliability and remaining service life of the existing 2,500 gpm pump is unknown.

The primary purpose of the pump station is to transfer water from the 450 Zone 14.3-million-gallon (MG) North Reservoir to the 545 Zone 11.2 MG South Reservoir for maintaining adequate levels in the South Reservoir (i.e., 545 Zone pressures), especially during high demand periods. If the South Reservoir is out of service or the hydraulic grade in the Tolt Eastside Supply Line is suppressed, the North Reservoir Pump Station could be used to maintain adequate pressures in the 545 Zone. The existing pump station does not have adequate capacity to accomplish this based on the projected supply requirements of the future.

Improvement: Replace the existing station with a new station that resolves the deficiencies identified above and has a capacity of 5,000 gpm. In addition to transferring water between the two reservoirs, the proposed pump station will be capable of maintaining adequate 545 Zone pressures during high demand periods or when the City of Seattle (Seattle) provides supply at or near the minimum contract head levels. The proposed pump station in conjunction with the proposed replacement of Supply Station S3 will also serve as a short-term backup supply facility for the 545 Zone in the event that Supply Station S2 is out of service. The pump station will also have the capability to pump water out of the North Reservoir and directly into the 450 Zone to utilize all water from the reservoir when it is drained for cleaning and inspection.

CIP J3: North Reservoir Outlet Meter

Deficiency: The reservoir has a bi-directional flow meter on the inlet piping from the 545 Zone, but does not have a meter on its 18-inch outlet to the 450 Zone. This improvement will assist in monitoring reservoir supply rates.

Improvement: Install a 16-inch meter, vault, telemetry, and appurtenances on the 18-inch outlet piping. Modify the master telemetry unit at the City Maintenance Center to include the monitoring of flows through this new meter.

CIP J4: Supply Station S1 Improvements

Deficiency: The existing supply station consists of a below-grade vault with a single 12-inch inlet pipe from the Seattle Supply System, 8-inch and 12-inch outlet piping, a flow meter and an 8-inch control valve on the 8-inch outlet piping. The station has inadequate lighting and no heating or ventilation. Consequently, the station has a problem with condensation buildup. Access into the vault is through the top hatch using a standard wall-mounted vault ladder. Access for equipment removal is poor. The 8-inch piping and control valve are not sized properly to maximize the flow capability of the station or minimize pipeline velocities during peak demands. The station lacks the capability to control the rate of flow through the 12-inch outlet pipe.

Improvement: Install adequate lighting, heating, and ventilation in the station. Replace the existing piping and valves with larger piping and valves to reduce pressure losses through the station and ensure adequate supply for demands from the Redmond master meters. Install control valves to control rate of flow and pressure in both outlet pipes. Install new lighting, heating, and ventilation equipment. Install electrical improvements as necessary for the new equipment. Install access improvements to improve safety when entering the station.

Table 9-4
Proposed Improvements Implementation Schedule

CIP No.	Size: Length (ft)	Size: Diameter	Description: In	Description: From	Description: To	Estimated Cost	Rank Points	Priority Rank	2014	2015	2016	2017	2018	2019	2020	2021	2022	2023	2024	2025	2026-2035	2035+
									Planned Year of Project and Estimated Cost in 2014 $$ (x 1000)													
327	1,656	12", 16"	~NE 40th (Office/Multi-Family)	W of Cross Kirk. Corridor	E of Lk Wash Blvd	$456,000	22	M														$456
328	1,477	8", 12", 16"	~106th Ave NE (Office/Multi-Family)	NE 38th Pl	~NE 40th St	$405,000	26	H														$405
329	2,236	12", 16"	NE 38th Pl	Lake Wash Blvd NE	NE 37th Cir	$615,000	28	H														$615
330	3,224	12", 16"	Lake Wash Blvd NE	NE 38th Pl	Northup Way	$891,000	36	H														$891
			Northup Way	Lake Wash Blvd NE	NE 37th Cir																	
			NE 37th Cir	NE 38th Pl	Northup Way																	
331	95	12"	Parking West of Lk Wash Blvd	~NE Points Dr	North End of Parking Lot	$26,000	25	H														$26
332	838	12"	101st Way NE	NE Points Dr	End of Road	$227,000	22	M														$227
			100th Ln NE	NE Points Dr	NE 37th Ct																	
333	1,130	12"	NE Points Dr	100th Ln NE	97th Ave NE	$306,000	19	L														$306
334	486	16"	141st Ave NE	Approx. NE 133rd St	Approx. NE 134th St	$148,000	10	L														$148
335	1,534	16"	NE 124th St	Willows Rd NE	285 PRV at 135th Ave	$466,000	8	L														$466
336	1,857	16"	Willows Rd NE	NE 124th St	285 PRV at 135th Ave	$564,000	25	H														$564
337	165	16"	Private Property	Willows Rd NE	Hydrant at ~141st Ave NE	$51,000	25	H														$51
338	384	16"	141st Ave NE	Willows Rd NE	Approx. NE 126th St	$117,000	15	L														$117
339	738	16"	NE 124th St	Willows Rd NE	~14000 NE 124th St	$224,000	25	H														$224
340	1,773	12", 16"	Private Property SE of Railroad	NE 124th St	Willows Rd NE	$515,000	12	L														$515
341	920	16"	NE 124th St	285 PRV at 135th Ave	Approx. 132nd Ave NE	$280,000	21	M														$280
342	918	12"	135th Ave NE	NE 124th St	NE 126th Pl	$249,000	25	H														$249
343	2,001	16"	NE 126th Pl	Approx. 132nd Ave NE	NE 128th St	$608,000	16	L														$608
344	875	16"	139th Ave NE	NE 128th St	285 PRV at 135th Ave	$266,000	19	L														$266
345	350	16"	Approx. 136th Ave NE	NE 126th Pl	Hydrant at ~NE 128th St	$107,000	25	H														$107
			Approx. 136th Ave NE	NE 126th Pl	Hydrant at ~NE 125th St																	
346	5,077	12", 16"	Private Property NW of Railroad	135th Ave NE	139th Ave NE	$1,453,000	11	L														$1,453
Total - Water Main Improvements						**$127,727,000**			**$4,199**	**$201**	**$785**	**$2,139**	**$2,014**	**$5,683**	**$2,789**	**$0**	**$0**	**$0**	**$0**	**$0**	**$0**	**$106,765**
					Unscheduled Water Main Improvements																	
WM	Unscheduled Water Main Improvements					$0										$2,843	$2,843	$2,843	$2,843	$2,843	$27,152	-$41,367
Total - Unscheduled Water Main Improvements						**$0**			**$0**	**$0**	**$0**	**$0**	**$0**	**$0**	**$0**	**$2,843**	**$2,843**	**$2,843**	**$2,843**	**$2,843**	**$27,152**	**-$41,367**
					Pressure Reducing Station and Pressure Relief Improvements																	
PRV1	Annual Pressure Reduction Station Replacement					O&M Funded																
Total - Pressure Reducing Station Improvements						**O&M Funded**																
					Miscellaneous Improvements																	
M1	Annual Customer Meter Replacement Program ($40,000 per Year)					O&M Funded																
M2	Annual AC, Galvanized, PVC Main Replacement ($25,000 per Year)					O&M Funded																
M3	Telemetry System Upgrade ($10,000 per Year)					O&M Funded																
M4	Comprehensive Water System Plan Update (Update Every 10 Years)					$300,000													$100		$100	$100
M5	Emergency Sewer Program Water Main Replacement Program					$550,000				$50		$50		$50		$50		$50		$50		$250
M6	Vulnerability Analysis Implementation					$275,000			$55	$55	$55	$55	$55									
Total - Miscellaneous Improvements						**$1,125,000**			**$55**	**$105**	**$55**	**$105**	**$55**	**$50**	**$0**	**$50**	**$0**	**$50**	**$100**	**$50**	**$100**	**$350**
					Joint-use Facility Improvements (Kirkland's Share)																	
J1	Supply Station S3 Replacement (Total Cost = $395,000)					$233,000																$233
J2	North Reservoir Pump Station Replacement (Total Cost = $919,000)					$542,000														$542		
J3	North Reservoir Outlet Meter Addition (Total Cost = $86,000)					$51,000												$51				
J4	Supply Station S1 Improvements (Total Cost = $230,000)					$132,000											$132					
J5	South Reservoir Recoating (Total Cost = $1.02M)					$583,000													$583			
Total - Joint-use Facilities Improvements (Kirkland's Share)						**$1,541,000**			**$0**	**$0**	**$0**	**$0**	**$0**	**$0**	**$0**	**$0**	**$132**	**$51**	**$583**	**$542**	**$0**	**$233**
TOTAL - ALL IMPROVEMENTS						**$130,393,000**			**$4,254**	**$306**	**$840**	**$2,244**	**$2,069**	**$5,733**	**$2,789**	**$2,893**	**$2,975**	**$2,944**	**$3,526**	**$3,435**	**$27,252**	**$65,981**

JOINT USE BOARD SHOULD DECIDE WHEN THESE PROJECTS SHOULD BE SCHEDULED

DUPLICATE ORIGINAL

Cascade Water Alliance

INTERLOCAL CONTRACT

Amended and Restated

December 15, 2004

OUTDATED

UPDATED CONTRACT WAS VOTED ON 10/26/2011

50-YEAR DECLINING BLOCK

WATER SUPPLY AGREEMENT BETWEEN

THE CITY OF SEATTLE

AND

THE CASCADE WATER ALLIANCE

10-02-03

OUTDATED

USE JULY 15, 2013 DOCUMENT