LAST REVISED: 1/1/2015

PLAN VIEW
NO SCALE

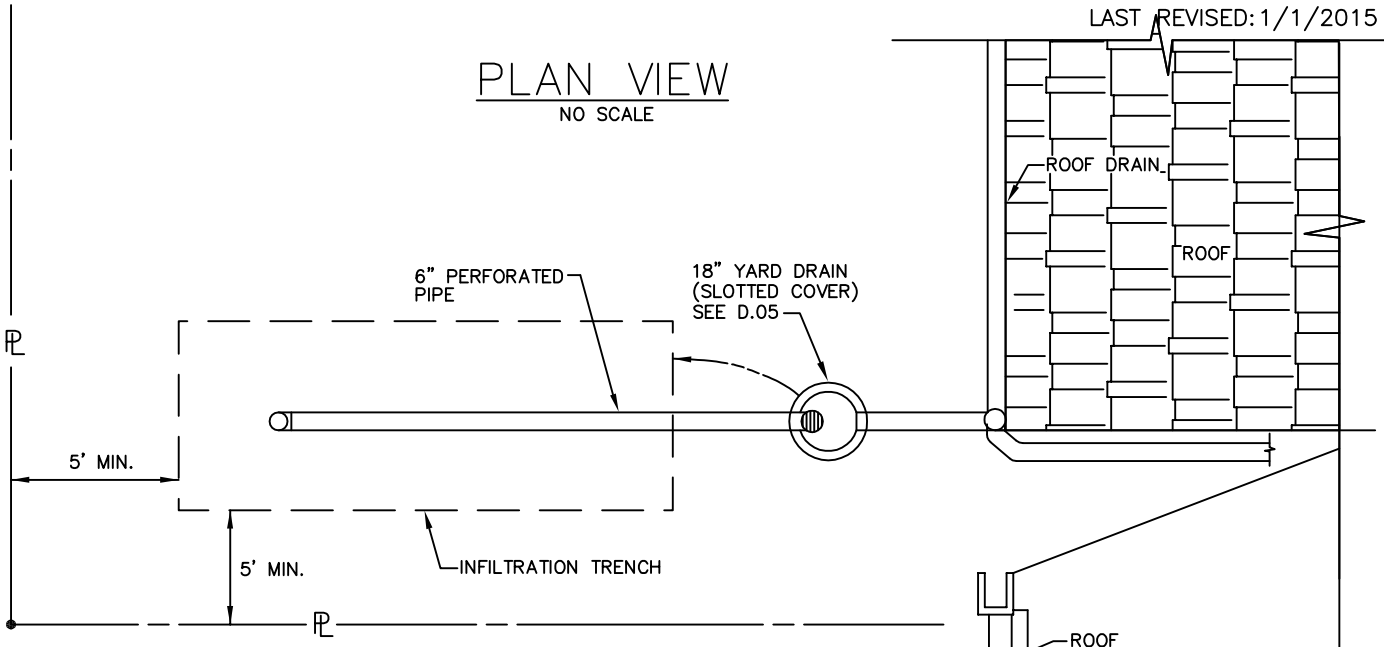

PROFILE VIEW
NO SCALE

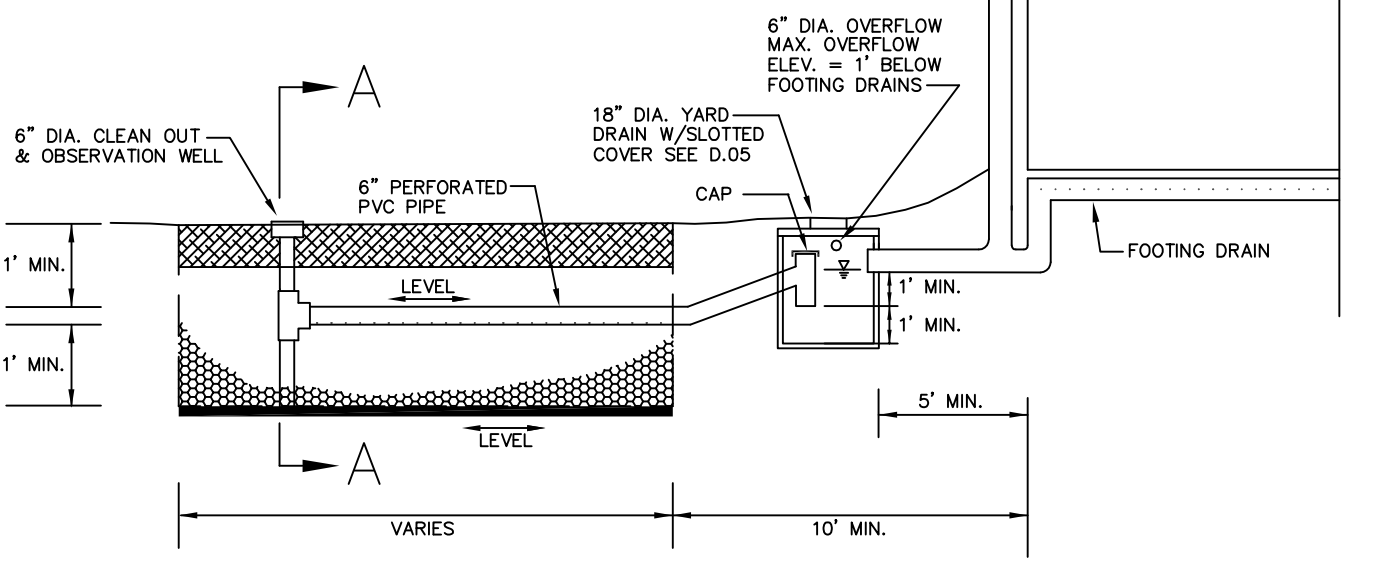

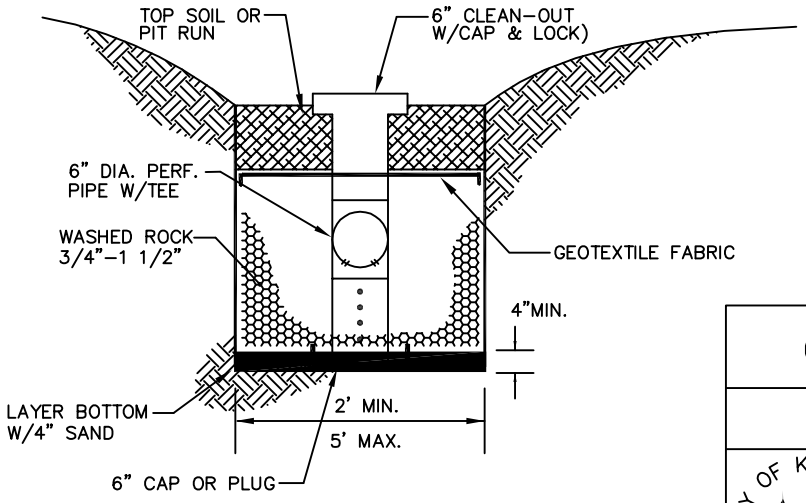

SECTION A-A
NO SCALE

SEE INFILTRATION TRENCH NOTES ON CK-D.22A

CITY OF KIRKLAND	
PLAN NO. CK-D.22	
CITY OF KIRKLAND WASHINGTON	INFILTRATION TRENCH