RECEIVED
FEB 28 2006
AM PM
PLANNING DEPARTMENT
BY

Stream buffer modification request and Buffer Enhancement Plan for the Smith Property

9746 Slater Road NE, Kirkland WA

Prepared For:

City of Kirkland
Department of Planning
and Community
Development

Kirkland, WA 98033

February, 2006

ATTACHMENT 6
ZON06-00010

Table of Contents

1.0 INTRODUCTION AND BACKGROUND 1

1.1 SITE CONDITIONS 1
1.2 BUFFER MODIFICATION REQUEST 2

2.0 BUFFER ENHANCEMENT PLAN 4

2.1 GOALS AND COMPONENTS OF THE PLAN 4
2.2 ENHANCEMENT ASSUMPTIONS 5
2.3 ENHANCEMENT MEASURES 5
2.3.1 Site Preparation 5
2.3.2 Planting Plan 6
2.3.3 Maintenance and Weed Control 7

3.0 COMPLIANCE MONITORING PLAN 7

3.1 GOAL OF COMPLIANCE MONITORING 7
3.2 MONITORING FREQUENCY 8
3.3 PERFORMANCE STANDARDS AND MEASUREMENTS 8
3.4 CONTINGENCY MEASURES/ ADAPTIVE MANAGEMENT 9

List of Tables

TABLE 1. IMPACTS, POTENTIAL CAUSES AND OBSERVATIONS AT SMITH PROPERTY 3
TABLE 2. PLANTING PLAN FOR SMITH STREAM BUFFER 7
TABLE 3. PERFORMANCE STANDARDS AND MEASUREMENTS 8
TABLE 4. GUIDELINES FOR ASSESSING THE VIGOR OF PLANTED STOCK 9

APPENDICES

A EROSION CONTROL DETAILS

B BUDGET ESTIMATE (2004)

C PLANTING PLAN

1.0 INTRODUCTION AND BACKGROUND

Adolfson Associates Inc. (Adolfson) prepared this report at the request of Mr. Ken Smith in response to a notice of violation (NOV) issued by the City of Kirkland Planning and Community Development Department (DPCD) in November 2003 - File No. ENF 02-189 (COM 02-00398) - Case (Formal File) No. APL03-00009.

The City has determined that improvements made to the existing foundation and deck of the Smith home occurred within a Class A stream buffer and without benefit of a permit. This stream buffer modification is intended to meet the requirements of Section 90.100 of the Kirkland Zoning Code (KZC).

In July 2003, Mr. Smith hired L.C. Lee & Associates (LCLA) to prepare a stream buffer enhancement plan in response to the NOV. Representatives from LCLA met with Ms. Dawn Nelson and Ms. Diana DuCroz of the DPCD to discuss the steps necessary to bring the property into compliance with the pertinent sensitive area requirements. LCLA then prepared a buffer enhancement and planting plan (February 2004), which is included as part of this request. Following a site investigation in February 2006, Adolfson biologists made minor revisions to the plan based on our professional assessment of the current site conditions and enhancement needs.

1.1 Site Conditions

The Smith property includes a Class A stream (Forbes Creek), which drains directly to Lake Washington. This salmonid-bearing stream flows across the southeast corner of the property. According to site observations made by Ben Nelson, Adolfson fisheries biologist, on 10 February 2006, the average width of the stream channel is two to three feet in most areas. Substrate within this section of stream is dominated by sand and fine sediment, with sparse patches of gravel and small cobble. Just downstream of the Smith property, the stream has several dams that form a sequence of small (15- to 20-foot-wide) ponds that are potential barriers to fish migration. The stream channel is incised throughout this reach and portions of the left bank are reinforced with riprap. A culvert (~18 inch diameter) conveys flow under a driveway south of the Smith property and is in relatively poor condition. The damaged culvert likely forms a partial migration barrier to fish in this section.

The riparian corridor of Forbes Creek within the Smith property is typical of many urban streams and is generally degraded. Vegetation on the left bank is currently lawn and scattered fruit trees. Dominant vegetation along the right bank includes blackberry and sword fern. Red alder and several Douglas fir trees are also present within the area. Pre-existing structures within the stream buffer on the Smith property include part of the residence (within 60 feet from the stream edge), a large barbeque pit and patio (5 feet from the stream), and a ~30 by 40 foot-wide paved work area/sport court (25 feet from the stream). These structures appear to be existing non-conforming uses, which to our knowledge have not been subject to any recent improvements.

1.2 Buffer Modification Request

KZC allows buffer modification through buffer averaging or buffer reduction with enhancement in accordance with Section 90.100. A request to modify a Class A stream buffer requires approval by the Hearing Examiner[1]. Approval is contingent upon a demonstration by a qualified professional that the proposed modification meets all of the following decision criteria:

1. Is consistent with the Kirkland Streams, Wetland, Wildlife Study (the Watershed Company 1998) and the Sensitive Areas Regulatory Recommendations Report (Adolfson Associates 1998);

2. Will not adversely affect water quality;

3. Will not adversely affect fish, wildlife or other habitat;

4. Will not adversely affect drainage or stormwater detention capabilities;

5. Will not lead to unstable earth or create erosion hazards or contribute to souring;

6. Will not be materially detrimental to other property in the area or to the City as a whole including loss of open space or scenic vistas;

7. Will not include use of fill material containing organic or inorganic material detrimental to fish, wildlife or habitat;

8. All exposed soils will be stabilized with native stream buffer vegetation; and

9. There is no practical or feasible alternative to the proposed action with less buffer impact.

The Kirkland Streams, Wetlands, and Wildlife Study (Watershed Company 1998) recommends enhancing buffers along Forbes Creek to provide wildlife habitat corridors, and this buffer modification /enhancement plan is consistent with that recommendation. The Adolfson Sensitive Areas Regulatory Recommendations Report (1998) notes that protection of water quality and fish and wildlife habitat are paramount concerns for Forbes Creek. Adolfson recommended minimum stream buffer widths for primary and secondary drainages, which are reflected in the City's current regulatory requirements. Although the Adolfson report does not address or make any recommendations for treatment of buffers on sites with non-conforming uses, it does state that stream buffer modifications that include enhancement of buffer vegetation to improve functions and values is consistent with scientific studies that suggest that narrow well-vegetated buffers can, in some cases, provide better functions than wider, poorly vegetated buffers.

---

[1] Requests are handled per the Process IIA provisions of the zoning code.

The home improvements that occurred recently on the Smith property do not appear to have materially affected the stream or stream buffer. With the exception of a small increase in the size of the back deck (extending the pre-existing elevated deck along the back of the house), the improvements were confined to the existing building footprint. The improvements occurred in the outer half of the buffer and did not involve grading, removal of riparian vegetation, or increase of impervious surface. No soils were left exposed. As a result, we believe there were no adverse effects on water quality, fish and wildlife habitat composition or structure, drainage or detention capacity, erosion or soil stability, or any other site condition. Furthermore, Mr. Smith did not introduce any harmful fill materials and did not change the use of his property in any way that would be materially detrimental to the adjacent properties. In summary, the improvements did not impact the functions or values of the stream in any measurable way. Table 1 presents a summary of the impacts that the City is concerned with (per KZC 90.100), their potential causes, and whether or not there is evidence of the adverse effect having occurred on the Smith property.

Table 1. Impacts, Potential Causes and Observations at Smith Property

Impacts	Potential Cause	Observations at Smith Property
Decreased water quality	Removing riparian vegetation and exposing soils to erosion; introducing contaminants; removing streamside cover, which can cause increased stream temperatures	• No evidence of any activity that would adversely impact water quality; • No visible sign of erosion or sedimentation from Smith property
Decreased fish or wildlife habitat	Removing potential sources of large woody debris; introducing foreign structures into the stream channel or buffer; decreasing canopy cover or structure in buffer; removing native plants; increasing noise and light impacts	• No evidence of any activity that would adversely impact riparian habitat; • Habitat impacts apparent downstream (offsite) are unrelated to recent improvements; • No change to pre-existing light or noise levels
Loss of drainage or detention capacity	Paving or altering pervious surfaces; grading or filling that alters runoff patterns	• No paving or addition of impervious surface outside pre-existing building footprint; • No modification of pre-existing drainage patterns
Increased erosion, slope	Clearing and grading;	• See above observations

Impacts	Potential Cause	Observations at Smith Property
instability, or scoring	increasing impervious surface; altering drainage rates or patterns	for water quality
Property detriment, loss of vistas or open space	Changing to a use that is incompatible with the surrounding property; constructing new structures that take up space or block views	• No change is use or compatibility with surrounding properties; • No new structures outside pre-existing building envelope
Exposed soils	Clearing without replanting or otherwise stabilizing soils	• The work was contained within the existing building envelope

Given that we believe the previous site improvements had no adverse impacts, there is no alternative that would have had less impact on the stream buffer. Although the improvements do not appear to constitute a buffer reduction *per se* (none of the modifications occurred any closer to the stream than the pre-existing structures), the buffer enhancement measures described below are proposed to meet the requirements of KZC 90.100.

2.0 BUFFER ENHANCEMENT PLAN

The buffer enhancement plan described below is based on the plan developed by LCLA in 2004. Adolfson biologists updated and revised the plan based on current site conditions and best professional judgment. The plan calls for planting native tress, shrubs and ferns along both stream banks (see Appendix C).

2.1 Goals and Components of the Plan

The goals of the proposed enhancement plan are to increase the level of riparian function proximate to Forbes Creek and protect the creek from adjacent land uses. The primary components of the plan are:

1. Mechanically clearing non-native vegetation throughout the enhancement area,

2. Restoring native riparian plant communities by planting indigenous tree, shrub, and fern species, and

3. Completing a 5-year compliance maintenance and monitoring program to ensure project standards are met.

2.2 Enhancement Assumptions

The enhancement plan is based on the following assumptions:

1. The proposed enhancement area of the Smith property will remain open green space in perpetuity.

2. All debris will be removed from the stream buffer and the area maintained in a natural, undisturbed vegetated state.

3. This enhancement proposal incorporates costs associated with project design, plant procurement, construction, weed control, and monitoring. Cost estimates are based on professional experience.

2.3 Enhancement Measures

2.3.1 Site Preparation

Sediment and erosion control measures will be installed consistent with permit conditions prior to the commencement of any enhancement work. Barrier fencing will mark the perimeter of the enhancement site, and sediment fence will be installed at top of bank of Forbes Creek to protect adjacent or down gradient waters/wetlands. Sediment and erosion control construction details are provided as Appendix A. Materials and construction costs are included as Appendix B.

2.3.1.1 Sequencing

The construction work associated with the proposed enhancement plan will be performed during the summer dry season. Activities will occur in the following order:

1. Install barrier and sediment fencing as specified above, and consistent with construction details offered in Appendix A.

2. Mechanically remove of all non-native plant species below top of bank.

3. Remove fruit trees and turf grasses within the 10-foot-wide enhancement buffer on river left.

4. Till the 10-foot-wide enhancement area on the river left.

5. Remove debris within stream buffer and exotic vine and herb species within the 10-foot-wide enhancement buffer on river right.

6. Spread three to six inches of sterile straw on disturbed soils.

7. Plant native tree, shrub, and understory species consistent with enhancement planting plan (Table 1 and Appendix C).

8. Implement adaptive management for five years following completion of the planting effort to allow for establishment of the trees and shrubs.

9. Annually monitor results for 5 years and submit monitoring reports to City in years by the end of each year.

2.3.1.2 Below top of bank

All areas below top of bank along Forbes Creek will be cleared of exotic plant species. Species of concern include: (1) Himalayan blackberry (*Rubus discolor*), (2) reed canarygrass (*Phalaris arundinacae*), and (3) yellow flag iris (*Iris pseudoacorus*). Reed canarygrass was not identified by LCLA during their site reconnaissance in the fall of 2003; however, observations nearby suggest that there is a high probability of occurrence along Forbes Creek. Removal of invasive plant species will require specific maintenance control measures.

2.3.1.3 Above top of bank

The plan calls for planting a 10-foot wide portion of the buffer on both sides of Forbes Creek. The 10-foot-wide enhanced buffer will extend out from top of bank to provide a vegetated riparian corridor. This is consistent with the recommendation in the Kirkland Streams, Wetlands, and Wildlife Study (Watershed Company 1998), which calls for enhancing stream buffers to provide wildlife corridors along Forbes Creek. The river bank (i.e., left side of creek when facing downstream) is currently a grass lawn with various cultivated fruit trees. The fruit trees within 10 feet of Forbes Creek will be moved to areas outside the 75-foot jurisdictional stream buffer, and the grass turf within the 10-foot wide area proximate to Forbes Creek will be removed prior to planting. The entire buffer area on river left will be tilled and sterile straw will be spread three to six inches thick across the disturbed soils to act as a weed barrier.

The 10-foot portion of the buffer on the right river bank is currently vegetated by exotic vines and herbs, as well as native trees and shrubs. Exotic plant species will be mechanically removed (i.e., hand pulled, dug out) within the 10-foot area. The area will not be tilled to avoid damaging shallow root systems of native tree and shrub species.

2.3.2 Planting Plan

The proposed plant community for the buffer enhancement areas is based on reference sites from throughout the Puget Sound lowlands and the best professional judgment of LCLA and Adolfson. The planting plan is provided as Table 2 and Appendix C. The total area to be restored is approximately 1,900 square feet (0.04 acres).

Table 2. Planting plan for Smith stream buffer

Species	Size	On-center Spacing (ft)	Quantity
Thuja plicata	2 gal	9.0	2
Acer macrophyllum	2 gal	9.0	2
Pseudotsuga menziesii	2 gal	9.0	2
Acer circinatum	1 gal	5.0	7
Rosa pisocarpa	1 gal	5.0	5
Lonicera involucrata	1 gal	5.0	8
Cornus stolonifera	1 gal	5.0	15
Gaultheria shallon	1 gal	3.0	20
Polystichum munitum	1 gal	3.0	16
Blechum spicant	1 gal	3.0	12

2.3.3 Maintenance and Weed Control

As previously mentioned, long term maintenance to control the establishment and spread of exotic plant species within the enhancement site will be required. Mechanical weeding (e.g. hand cultivation, weed whacking) will be performed as necessary to control weed re-growth. However, the long-term weed control strategy for the enhancement site is to establish native tree and shrub species to eventually shade exotic plant species characteristic of disturbed sites.

Another important aspect of site maintenance is watering, especially during the first few growing seasons as newly planted trees and shrubs are becoming established. The plan calls for watering at a rate of one inch of water per week between June 15 and October 1 for the first two years and as needed thereafter.

3.0 COMPLIANCE MONITORING PLAN

3.1 Goal of Compliance Monitoring

Goals for the compliance monitoring plan are as follows:

1. Illustrate progress toward, or deviation from, stipulated project targets and quantitatively assess the success of the project;

2. Provide the City of Kirkland with information regarding enhancement efforts, and if necessary:

3. Initiate/trigger contingency measures to move or maintain progress toward stipulated project standards.

3.2 Monitoring Frequency

Monitoring will be undertaken at the conclusion of all construction and planting activities to documents "as-built"/baseline condition. A subsequent monitoring report will be produced at that time. Monitoring will continue annually for five years, and a report will be submitted to the City DPCD. Each monitoring report will document the site's current conditions, and track the progress of the site towards attaining the articulated performance standards discussed below.

3.3 Performance Standards and Measurements

To monitor the development of the vegetative communities within the enhancement site, sample plots will be established within the enhancement site. A minimum of two plots will be established on each side of the stream. The center of each plot will be marked with a stake or other visible marker. Each year, measurements will be taken at each plot to estimate the following:

(1) Percent survival of planted stock,

(2) Total percent plant cover for the sample plot,

(3) Percent cover of non native species, and

(4) Vigor of planted stock (Table 3). Vigor of planted stock will be assessed qualitatively using the guidelines outlined in Table 4, as well as by recorded photo documentation.

Table 3. Performance Standards and Measurements

Year	Performance Standard	Field Measurement
1 (first growing season following planting)	Greater than or equal to 85% survivorship of planted stock	Full count of live stems
2 (second growing season following planting)	Greater than or equal to 80% survivorship of planted stock All plots exhibiting good and/or excellent vigor	Estimate of survivorship from sample plots Vigor of planted stock per Table 4
3 (third growing season	Greater than or equal to 40%	Estimate of aerial vegetative

Year	Performance Standard	Field Measurement
following planting)	plant cover Minimal (25%) invasive species All plots exhibiting good and/or excellent vigor	cover from sample plots Estimate of invasive cover from sample plots Vigor of planted stock per Table 4
4 (fourth growing season following planting)	Greater than or equal to 50% native species All plots exhibiting good and/or excellent vigor	Estimate of aerial vegetative cover from sample plots Vigor of planted stock per Table 4
5 (fifth growing season following planting)	Greater than or equal to 75% survivorship of planted stock All plots exhibiting good and/or excellent vigor Minimal (25%) invasive species	Estimate of survivorship from sample plots Vigor of planted stock per Table 4 Estimate of invasive cover from sample plots

Table 4. Guidelines for Assessing the Vigor of Planted Stock

Score	Qualitative Description of Score
Excellent	No evidence of stress; minor pest or pathogen damage
Good	Some evidence of stress; pest or pathogen damage present
Fair	Moderate level of stress; high levels of pest or Pathogen damage
Poor	High level of stress; high levels of pest or pathogen damage

3.4 Contingency Measures/ Adaptive Management

In the event that the monitoring efforts indicate that performance standards are not being met, contingency measures will be implemented to ensure that the enhancement site continues to progress toward projected targets. If the vegetation performance standards are not met because of plant mortality, an investigation as to potential causes and solutions will occur and the City will be consulted to determine options for adaptive management. In some cases, mortality could be the result of environmental factors beyond the property owners' control. In any event, appropriate steps will be taken to address the causes and replant the site as appropriate.

Development of a woody canopy is the most viable solution for weed control at this site. Thus, weed control measures should be focused on elimination of weed competition with the planted stock. Mechanical measures will be used to control emerging weeds. The first steps will be mechanically removal, with proper disposal of all debris.

Appendix A

Construction Details for Smith Restoration Plan

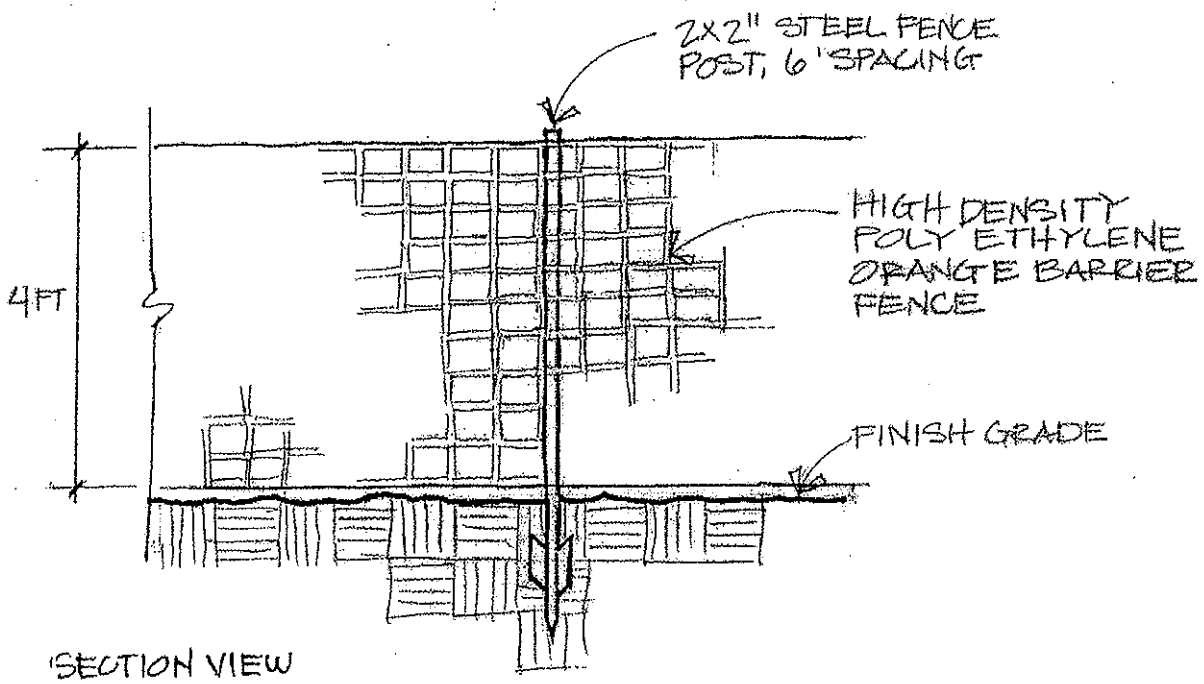

CONSTRUCTION BARRIER FENCE

NOT TO SCALE

L.C. Lee and Associates, Inc.
3534 Bagley Avenue N, Seattle, WA 98103
Phone: 206.283.0673 Fax: 206.283.0627

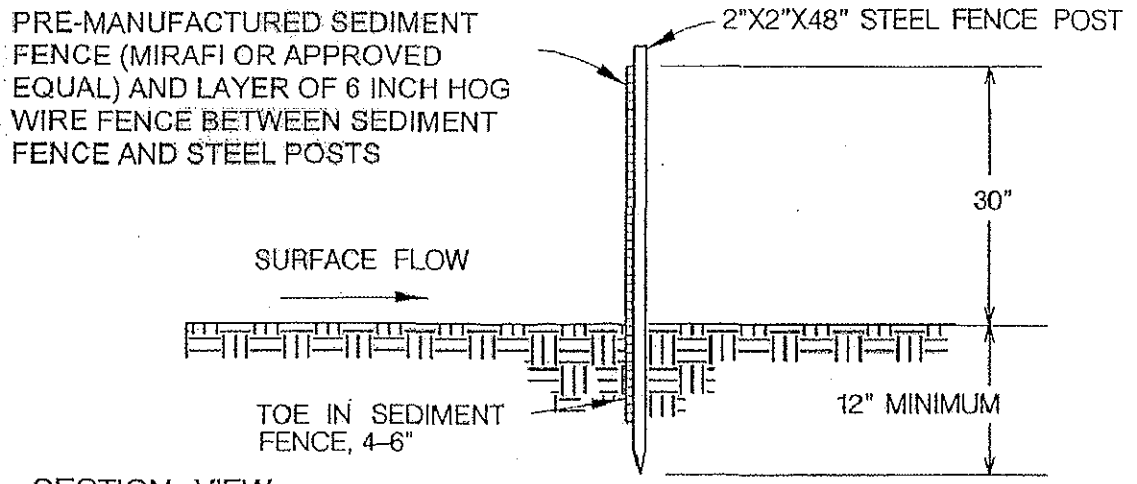

SECTION VIEW

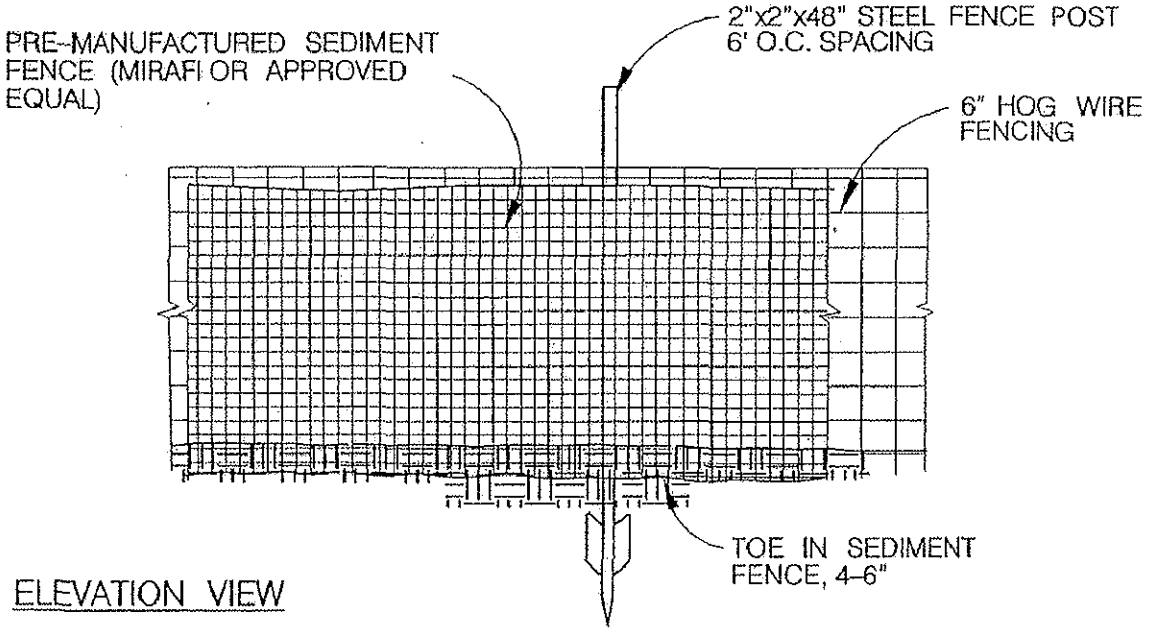

ELEVATION VIEW

HEAVY DUTY SEDIMENT FENCE

NOT TO SCALE

L.C. Lee and Associates, Inc.
3534 Bagley Avenue N, Seattle, WA 98103
Phone: 206.283.0673 Fax: 206.283.0627

Appendix B

Budget Estimate for Smith Restoration Plan

Cost Estimate for Smith Buffer Enhancement

Item	Quantity	Unit Cost	Total
Site preparation (barrier fencing, sediment and erosion control fencing)	100 Lf	$2.25/lf	$225.00
Weed Control (hand pulling, tilling, mulch)	8 hrs	$20/hr	$1,600.00
Plants	6 trees 35 shrubs 48 ferns	$6.00/2 gal $3.00/1 gal 2.75/ 1 gal	$36.00 $105.00 $132.00
Maintenance	80 hrs	$20/hr	$1,600.00
Compliance Monitoring	30 hrs	$80/hr	$2,400.00
TOTAL			**$6,098.00**

Appendix C

Restoration and Monitoring Map for Smith Restoration Plan

PLANTING SCHEDULE

SCIENTIFIC NAME	COMMON NAME	QTY	SIZE	SPACING
STREAM BUFFER PLANTS				
Thuja plicata	Western Redcedar	2	2 GAL.	9' O.C.
Acer macrophyllum	Bigleaf Maple	2	2 GAL.	9' O.C.
Pseudotsuga menziesii	Douglas Fir	2	2 GAL.	9' O.C.
Acer circinatum	Vine Maple	7	2 GAL.	5' O.C.
Rosa pisocarpa	Swamp Rose	5	1 GAL.	5' O.C.
Lonicera involucrata	Black Twinberry	8	1 GAL.	5' O.C.
Cornus stolonifera	Redtwig Dogwood	15	1 GAL.	5' O.C.
Gaultheria shallon	Salal	20	1 GAL.	3' O.C.
Polystichum munitum	Sword Fern	16	1 GAL.	3' O.C.
Blechum spicant	Deer Fern	12	1 GAL.	3' O.C.

Seed Mix

Seed all areas of disturbed soil with the following mix:

Blue Wildrye	Elymus glaucus	50%
Meadow Barley	Hordeum brachyantherum	30%
Tufted Hairgrass	Deschampsia Caespitosa	20%

Application rate: 25 lbs./acre

BUFFER PLANTING ZONE

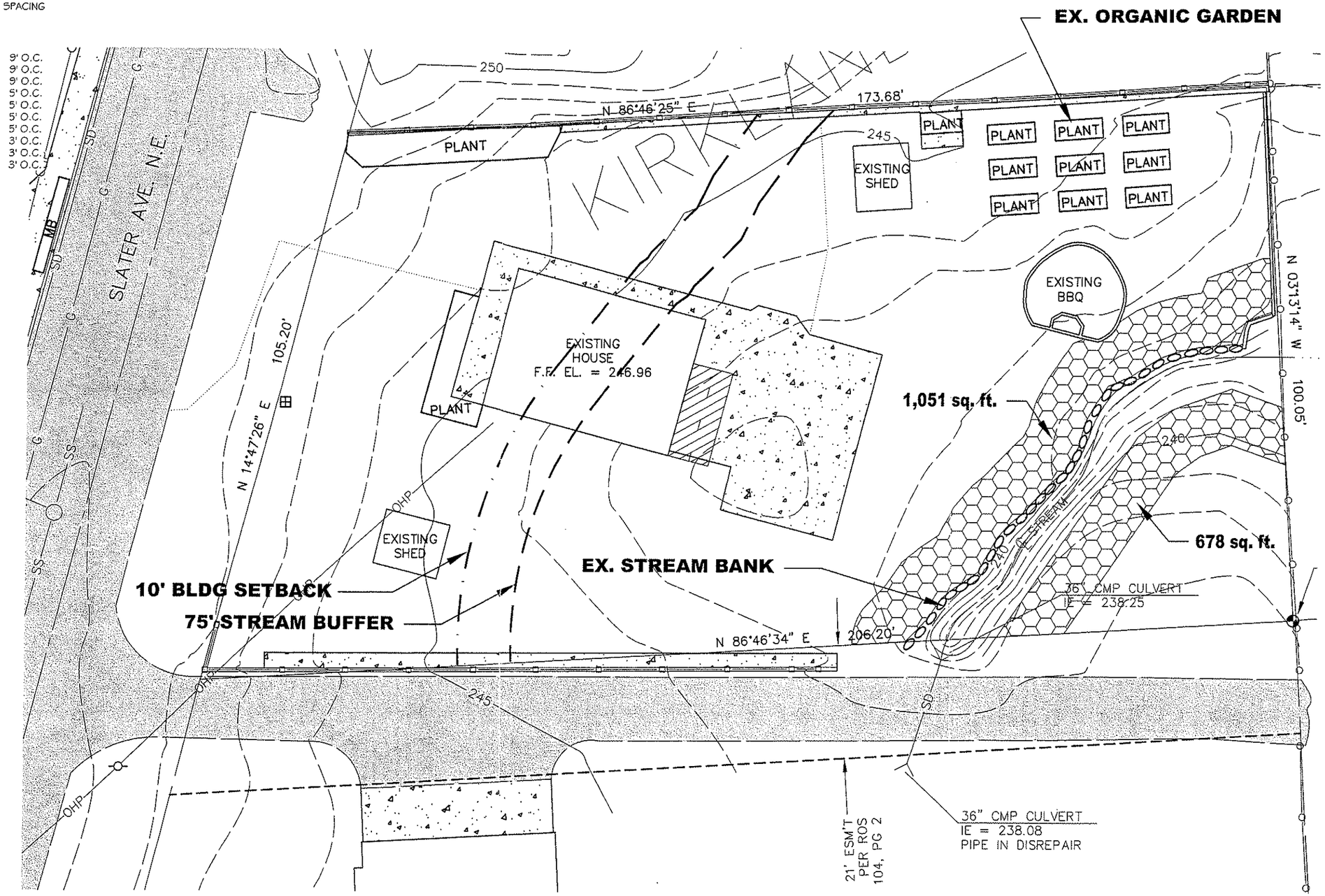

ADOLFSON ASSOCIATES, INC.
Environmental Solutions
5309 Shilshole Ave. NW
Seattle, WA 98107
P: (206) 789-9658
F: (206) 789-9684

N

SCALE 1"=20'

MAP DATA ARE THE PROPERTY OF THE SOURCES LISTED BELOW. INACCURACIES MAY EXIST, AND ADOLFSON ASSOCIATES, INC. IMPLIES NO WARRANTIES OR GUARANTEES REGARDING ANY ASPECT OF DATA DEPICTION.
SOURCE: SUMMIT SURVEYING, NOVEMBER 2000

File name: 26013_Planting.dwg
Date: 2/27/06 mbe
Revised:

STREAM BUFFER ENHANCEMENT
SMITH PROPERTY
9746 SLATER ROAD NE, KIRKLAND, WASHINGTON
MR. KEN SMITH

SHEET NO.
L 1.0

THE WATERSHED COMPANY

SCIENCE & DESIGN

OCT 17 2006

PLANNING DEPARTMENT

BY

August 21, 2006

Ron Hanson
City of Kirkland Planning
123 – 5th Avenue
Kirkland, WA 98033

Re: Smith Stream Buffer Modification

Dear Ron:

Thank you for the opportunity to review the Stream Buffer Modification Request and Buffer Enhancement Plan for the Smith property at 9746 Slater Road NE in Kirkland. In addition to reviewing the written document and planting plan by Adolfson Associates, I visited the site on August 18, 2006, to evaluate the stream buffer.

Findings

The plan is required in response to a notice of violation issued by the City of Kirkland. The subject stream is a Class A stream, and existing use of the property prevents the full buffer from being either preserved or restored. The plan proposes to restore a 10-foot buffer on each side of the stream, measured from the top of the stream bank, using native vegetation.

A few areas of the plan require revision. The plan includes mechanical removal of non-native vegetation below the top of the bank. This will very likely cause some stream disturbance. The plan contains no provision for this. Sediment fencing is proposed for the top of the bank, but no measures are specified to prevent erosion and sedimentation from below top-of-bank vegetation removal. The stream bank will also likely need to be stabilized after vegetation removal.

The text estimates the enhancement area at 1,900 square feet; the plan sheet shows total enhancement area to equal 1,729 square feet. Table 2 of the plan lists plant spacing as 9, 5, and 3 feet on-center for trees, shrubs, and ferns, respectively. However, the proposed number of plants is fewer than what would be required to achieve these densities in the typical triangular installation pattern. An area of 1,729 square feet would require 21 trees, 69 shrubs, and 192 ferns at the specified spacings. The plan proposes only 6 trees, 55 shrubs, and 28 ferns.

The plan calls for removal of non-native vegetation within the proposed 10-foot buffer enhancement area. On the bank on the side away from the landowner's house (right bank), invasive species dominate and have overgrown the stream itself. As proposed, the plan would leave invasive species in approximately 500 square feet adjacent to the 10-foot buffer. It is highly likely that these remaining plants will take over the enhancement area on the right bank soon after the maintenance period ended. If all invasive species on this side were removed to the

ATTACHMENT 7
ZONE CODE

750 Sixth Street South Kirkland, WA 98033
p 425.822.5242 f 425.827.8136 watershedco.com

property line and the area not replanted, exposed soils could potentially enter the stream, particularly because the land slopes down toward the stream for about 25 feet from top-of-bank. Thus, replanting may also be necessary in this area.

Monitoring of the enhancement area is to be conducted using sample plots to assess percent survival, percent cover, cover of non-native species, and plant vigor. However, plot size is not specified and although a full plant in Year 1 count is listed in Table 3, this is not specified in the text. While sample plots are appropriate for estimating percent cover, the enhancement area as proposed is small enough that a full count of tree and shrub species could be easily conducted in each year. The plan also does not differentiate between woody and herbaceous vegetation for cover estimates. Because, as the text notes, a woody canopy is crucial for weed control, cover in these strata should be estimated separately. Both the text and Table 3 fail to present percent cover standards for Years 4 and 5, in which this measurement is of the greatest importance. Also, a measurement unit for invasive species performance standards is not specified in Table 3, but we assume that it is intended to be percent cover. Twenty-five percent cover by invasive species is not "minimal," as it is characterized in the plan. Rather, 10 percent cover is widely accepted. A performance standard addressing native plant species diversity is not included in the plan.

KZC 90.95 requires a fence or plantings of equal barrier at the edge of a stream buffer. While existing uses on the site make a fence around the entire buffer impractical, such a barrier is needed to protect the planted area on the left bank from further intrusion. The existing fence on the right bank will suffice on that side. A fence is preferable to a planted barrier, as plantings need constant ongoing maintenance to ensure they have an equivalent barrier value.

Monitoring should be conducted by a biologist trained in restoration practices, and this should be specified in the plan text. To save on costs, the twice-yearly monitoring can consist of an early spring maintenance visit and a late-season formal monitoring visit. While no spring report is necessary the annual reports should list findings of the spring visit in addition to findings of the formal monitoring work.

The cost estimated presented in Appendix B of the mitigation plan is missing several components. These include a temporary irrigation system; materials such as mulch and straw; and labor and equipment costs for site preparation and planting. Labor costs and hours for maintenance are underestimated. KZC sections pertaining to wetlands and wetland buffers are required to have 5-year maintenance and monitoring plans and monitoring is to take place twice per year. While not specifically called out in the stream sections of the KZC, this level of monitoring and maintenance is just as relevant to stream buffers as it is to wetland buffers. Not enough hours are allocated to maintenance and compliance in the plan. Cost per hour for maintenance is also low. The revised King County Bond Quantity Worksheet contains expected costs for these elements.

Recommendations

We recommend the Planning Department require that the applicant complete the following:

1) Submit a detailed plan for controlling erosion and sedimentation from work below top-of-bank. This should include plans for restabilizing the stream bank after vegetation removal.
2) Revise the plan text and drawing to show the accurate square footage of the enhancement area.
3) Recalculate the number of plants needed for the spacing specified in Table 2 using the following per-square-foot multipliers: 0.012 for trees, 0.040 for shrubs, and 0.111 for ferns.
4) Include plans for removing invasive vegetation to the property line on the right bank.
5) Consider planting the entire slope on the right bank, both for stability and to prevent reinvasion of non-native species. At a minimum, areas of weed removal should be seeded.
6) Specify sample plot size for estimating percent cover; clarify methods for estimating percent cover in two strata; and add verbage to the text requiring a full plant count in all years.
7) Clearly detail performance standards to include percent cover by native woody plants (80%), maximum cover by invasive weeds (10%), and some standard regarding diversity of native plants (at least 3 native tree species and 4 native shrub species will be established).
8) Clearly spell out that monitoring and maintenance is to take place two times in each year. Monitoring is to be twice per year with an annual report completed by a biologist or other professional versed in environmental restoration projects. Maintenance should include weeding of competing grasses and herbs from the base of each plant at least twice per year and more often if invasive weeds become problematic.
9) Provide a bond estimate for the work, using industry standards for materials and labor costs.

The addition of these recommendations will ensure the plan meets the letter and intent of the Kirkland Zoning Code.

Please call with any questions.

Sincerely,

Suzanne Tomassi
Wetland/Wildlife Biologist

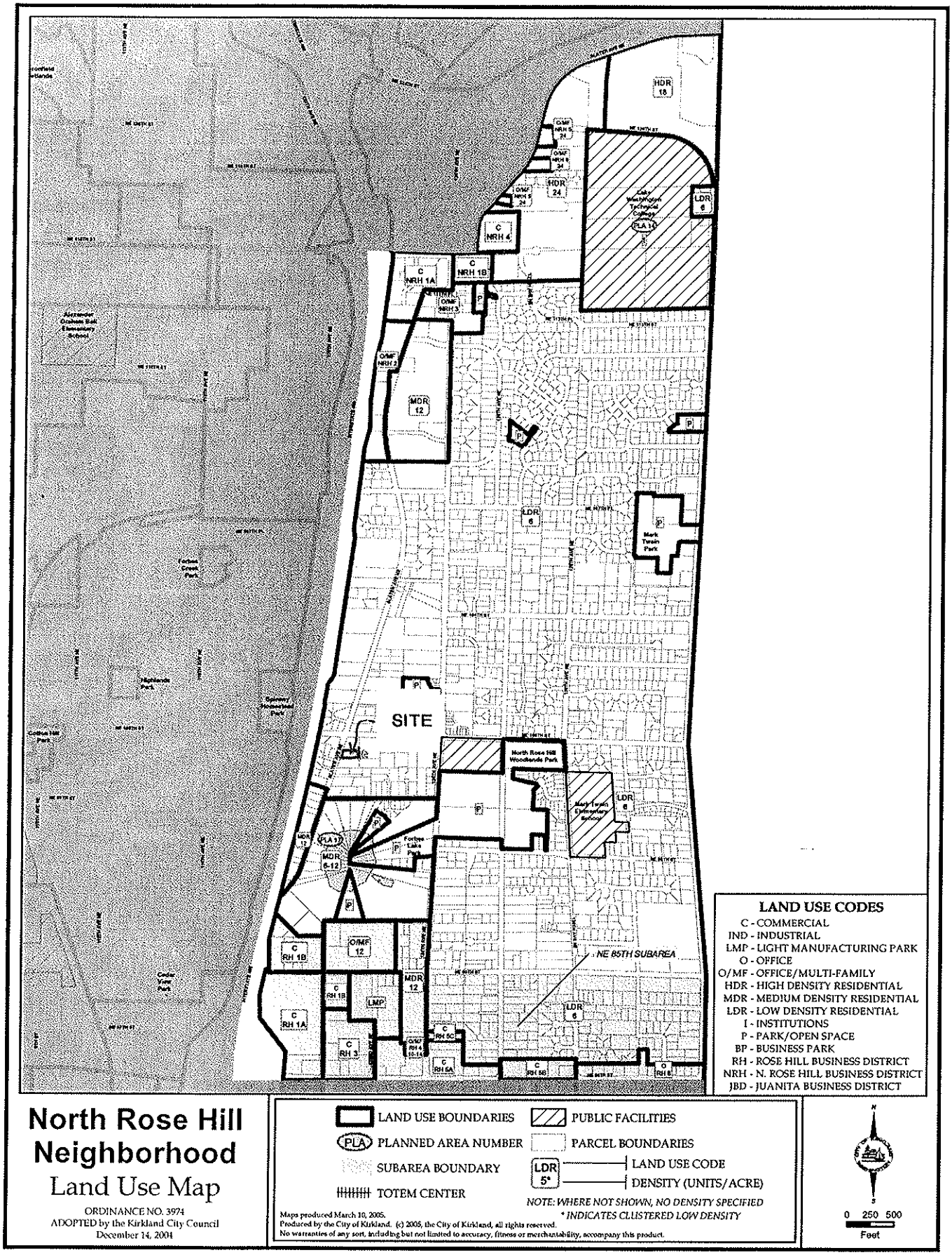

North Rose Hill Neighborhood
Land Use Map

ORDINANCE NO. 3974
ADOPTED by the Kirkland City Council
December 14, 2004

Figure NRH-4: North Rose Hill Land Use

City of Kirkl

ATTACHMENT 8
20N06-00010