NE 1/4, NW 1/4, SEC 27, TWN 26 N, RGE 5 E, W.M., KING COUNTY, WASHINGTON

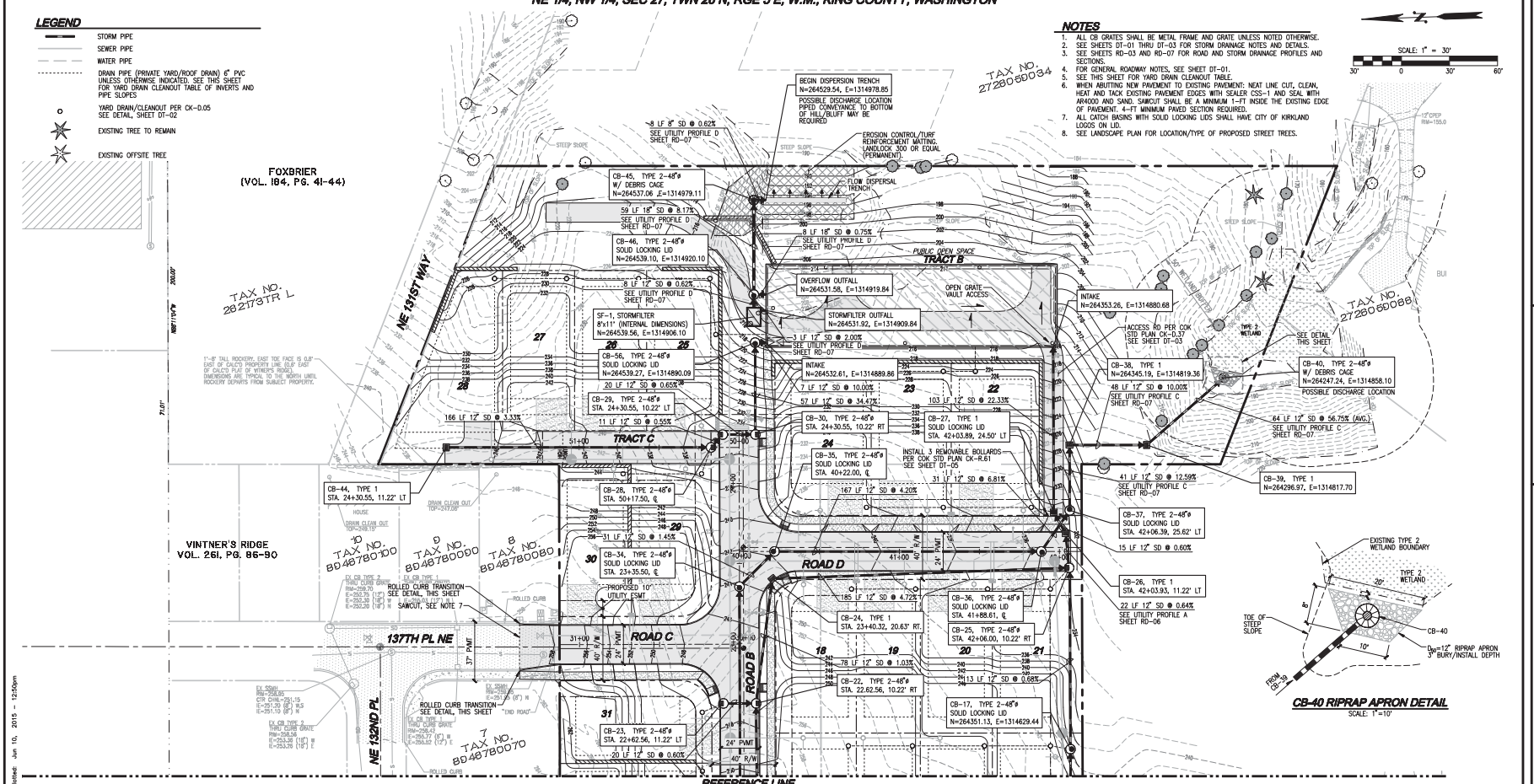

YARD DRAIN / CLEANOUT TABLE

UNIT NO.	LOCATION	DEPTH (FT)	RIM (FT)	IE (FT)	PIPE SIZES (IN)	DOWNSTREAM (LF)	DOWNSTREAM SLOPE
1	front	3.00	267.00	264.00	6	43	8.1%
1 – R	rear	3.00	256.50	253.50	6	45	8.9%
2	front	4.00	264.50	260.50	6	26	19.2%
2 – R	rear	3.00	252.50	249.50	6	45	8.9%
3	front	5.00	260.50	255.50	6	18	8.3%
3 – R	rear	3.00	248.50	245.50	6	45	14.4%
4	front	3.00	254.00	251.00	6	53	9.4%
4 – R	rear	5.00	244.00	239.00	6	48	4.2%
5	front	4.00	250.00	246.00	6	42	10.7%
5 – R	rear	4.00	241.00	237.00	6	32	1.9%
6A	front	6.00	247.50	241.50	6	12	5.8%
6B	side	2.50	239.00	236.50	6	22	3.3%
6 – R	rear	1.60	238.00	236.40	6	35	1.8%
7A	front	4.50	241.00	236.50	6	14	2.9%
7B	front	4.90	241.00	236.10	6	14	2.3%
8	front	6.75	244.50	237.75	6	45	2.8%
9	front	3.00	241.50	238.50	6	18	4.2%
10A	side	8.75	244.50	235.75	6	42	1.3%
10B	front	8.80	244.00	235.20	6	6	3.3%
11	front	9.00	244.00	235.00	6	18	2.7%
12	front	3.00	245.50	242.50	6	45	16.7%
13	front	6.00	247.25	241.25	6	22	4.5%
14	rear	5.00	244.50	239.50	6	13	11.5%
15	rear	4.00	248.00	244.00	6	41	11.0%
16	rear	3.00	250.00	247.00	6	45	6.7%
17	rear	3.00	251.00	248.00	6	40	2.5%
18	front	3.00	241.00	238.00	6	45	3.3%
19	front	3.00	239.50	236.50	6	45	5.6%
20	front	3.00	237.00	234.00	6	36	5.6%
21	front	3.50	235.50	232.00	6	12	6.4%
22	rear	4.00	236.25	232.25	6	22	5.7%
22 – R	rear	8.50	224.50	216.00	6	15	53.3%
23	front	3.00	238.25	235.25	6	50	6.0%
23 – R	rear	6.00	225.50	219.50	6	20	17.5%
24	front	3.00	240.25	237.25	6	55	5.6%
24 – R	rear	3.00	228.00	225.00	6	50	11.0%
25A	rear	7.00	225.50	218.50	6	35	4.3%
25B	side	10.00	227.00	217.00	6	23	39.1%
26	rear	7.50	227.00	219.50	6	45	2.2%
27	rear	7.00	229.00	222.00	6	45	5.6%
28	rear	3.00	227.00	224.00	6	45	4.4%
29	rear	5.00	237.50	232.50	6	15	10.0%
30	rear	6.00	244.00	238.00	6	44	12.5%
31	front	6.00	249.50	243.50	6	14	18.6%
32	front	4.00	252.00	248.00	6	37	12.2%
33	front	3.00	256.00	253.00	6	45	11.1%
34	front	3.00	261.50	258.50	6	45	12.2%
35	front	5.00	266.00	261.00	6	45	5.6%
36	front	4.00	270.00	266.00	6	45	11.1%
37	front	3.00	258.75	255.75	6	45	3.9%
38	front	3.00	257.00	254.00	6	41	7.3%
39	front	3.00	254.00	251.00	6	47	14.9%
40A	front	3.00	249.00	246.00	6	19	7.9%
40B	front	3.50	248.00	244.50	6	25	2.0%
40C	side	4.00	248.00	244.00	6	13	15.4%
40D	side	6.00	248.00	242.00	6	12	25.8%
41	front	3.00	252.00	249.00	6	36	8.3%
42	front	3.00	255.50	252.50	6	39	9.0%
43	rear	3.00	258.00	255.00	6	47	2.1%
44	rear	6.00	260.00	254.00	6	69	14.5%
45	front	3.00	270.00	267.00	6	73	6.2%
TRACT D	TRACT D	6.00	250.00	244.00	6	12	2.0%

NOTE: "R" DESIGNATES YARD DRAIN/CLEANOUT LOCATED AT REAR OF LOT.

SURVEY DISCLAIMER

TOPOGRAPHIC SURVEY INFORMATION ON TAX LOTS 2726059032, 2726059078, 2726059081, 2726059033 AND WITHIN 130th AVE NE AS SHOWN ON THESE PLANS HAS BEEN PROVIDED BY: CORE DESIGN, INC. LDC, INC. (LAND DEVELOPMENT CONSULTANTS, INC.), ASSUMES NO LIABILITY AS TO THE ACCURACY AND COMPLETENESS OF THIS DATA. ANY DISCREPANCIES FOUND BETWEEN WHAT IS SHOWN ON THE PLANS AND WHAT IS NOTED IN THE FIELD SHOULD BE BROUGHT IMMEDIATELY TO THE ATTENTION OF THE ENGINEER.

TOPOGRAPHIC SURVEY INFORMATION ON TAX LOTS 2726059073, 2726059066, 2726059039, 2726059034 AND WITHIN NE 131ST WAY AND BURLINGTON NORTHERN RIGHT-OF-WAY AS SHOWN ON THESE PLANS HAS BEEN PERFORMED BY LDC, INC. IN DECEMBER 2014. ANY CHANGES TO THE SITE AFTER THIS DATE WILL NOT BE REFLECTED IN THE PLANS. ANY DISCREPANCIES FOUND BETWEEN WHAT IS SHOWN ON THE PLANS AND WHAT IS NOTED IN THE FIELD SHOULD BE BROUGHT IMMEDIATELY TO THE ATTENTION OF THE ENGINEER.

Call 2 Business Days Before You Dig 811 or 1-800-424-5555 Utilities Underground Location Center

REVISIONS

NO.	DATE	DESCRIPTION	BY
1	5-21-15	REVISED PER CITY COMMENTS DATED 2-17-15	MWM
2	6-10-15	MINOR GRADING REVISIONS	MWM

Engineering Structural Planning Survey
LDC THE CIVIL ENGINEERING GROUP
11401 NE 132ND St., #100 Kirkland, WA 98034
Ph. 425.821.3665 Fax 425.821.3666
www.LDCinc.com

PULTE GROUP
MARINWOOD
PRELIMINARY ROAD AND STORM DRAINAGE PLAN

MATTHEW MERRITT STATE OF WASHINGTON 21600 REGISTERED PROFESSIONAL ENGINEER

JOB NUMBER: 13-176
DRAWING NAME: 13176P-RD-PL
DESIGNER: MWM
DRAFTING BY: RCR
DATE: 2-06-15
SCALE: AS NOTED
JURISDICTION: KIRKLAND

RD-02

SHEET 19 OF 35

Plotted: Jun 10, 2015 - 12:50pm
Drawing: P:\2013\13-176 Kirkland Moore Layout\Drawings\Preliminary\13176P-RD-PL.dwg

NE 1/4, NW 1/4, SEC 27, TWN 26 N, RGE 5 E, W.M., KING COUNTY, WASHINGTON

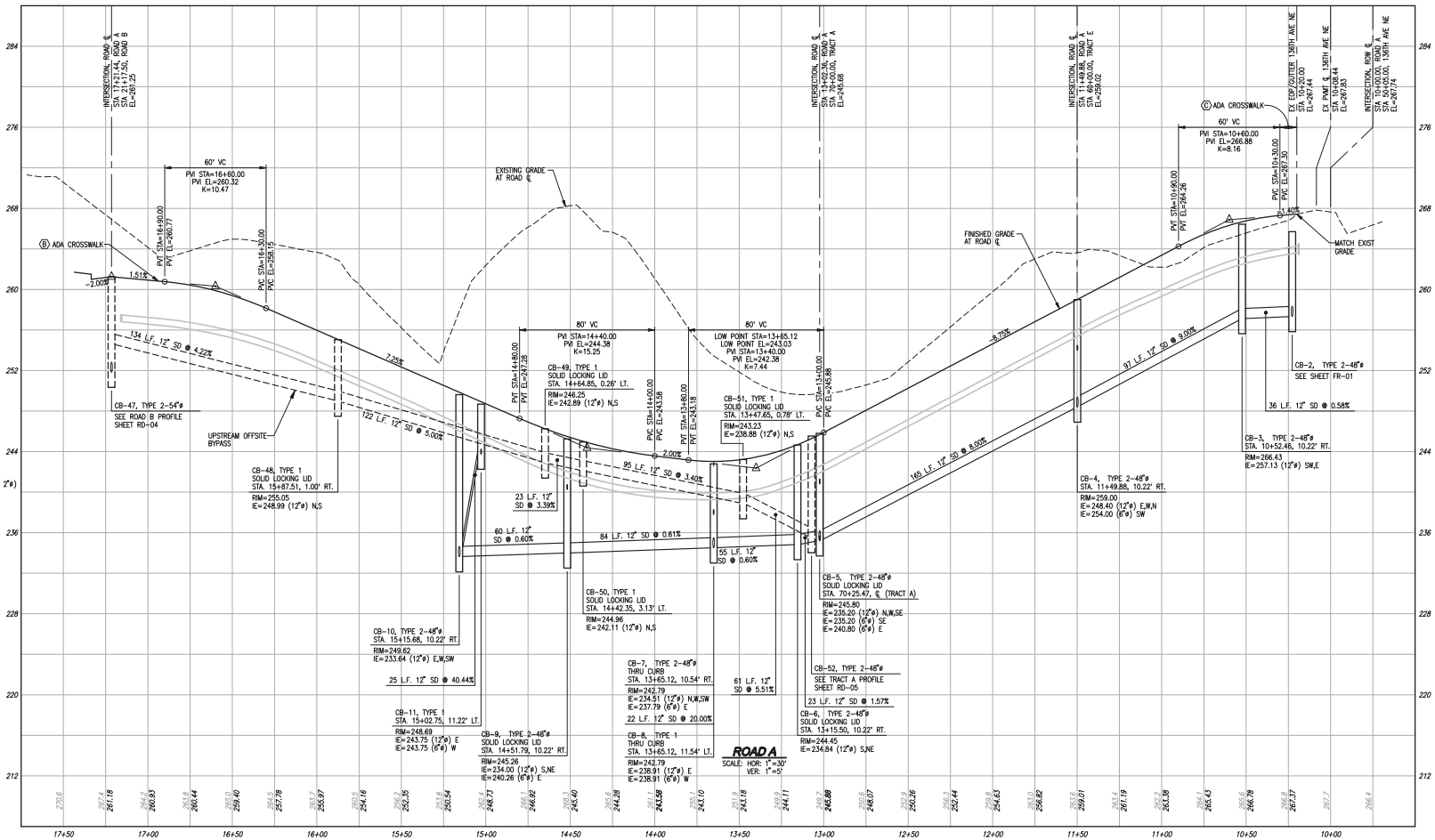

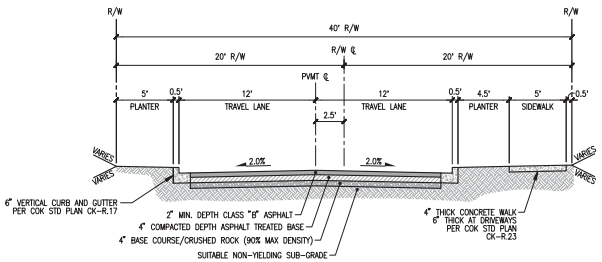

TYPICAL INTERNAL PLAT ROAD SECTION
SCALE: 1"=5'

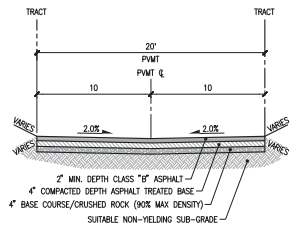

TRACT ROAD SECTION
SCALE: 1"=5'

Call 2 Business Days Before You Dig
811 or 1-800-424-5555
Utilities Underground Location Center

REVISIONS

NO.	DATE	DESCRIPTION	BY
1	5-21-15	REVISED PER CITY COMMENTS DATED 2-17-15	MWM
2	6-10-15	MINOR GRADING REVISIONS	MWM

LDC
THE CIVIL ENGINEERING GROUP
Engineering
Structural
Planning
Survey
14501 NE 20th St., #100
Bellevue, WA 98007
Ph. 425.885.1986
Fx. 425.885.1886
www.LDCcorp.com

PULTE GROUP
MARINWOOD
PRELIMINARY ROAD PROFILES AND SECTIONS

MATTHEW MERRITT
STATE OF WASHINGTON
REGISTERED PROFESSIONAL ENGINEER

JOB NUMBER:	13-176
DRAWING NAME:	13176P-RD-PR
DESIGNER:	MWM
DRAFTING BY:	RCR
DATE:	2-06-15
SCALE:	AS NOTED
JURISDICTION:	KIRKLAND

RD-03

SHEET 20 OF 35

Drawing: P:\2013\13-176 Kirkland Moore Layout\Drawings\Preliminary\13176P-RD-PR.dwg Plotted: Jun 10, 2015 - 12:51pm

NE 1/4, NW 1/4, SEC 27, TWN 26 N, RGE 5 E, W.M., KING COUNTY, WASHINGTON

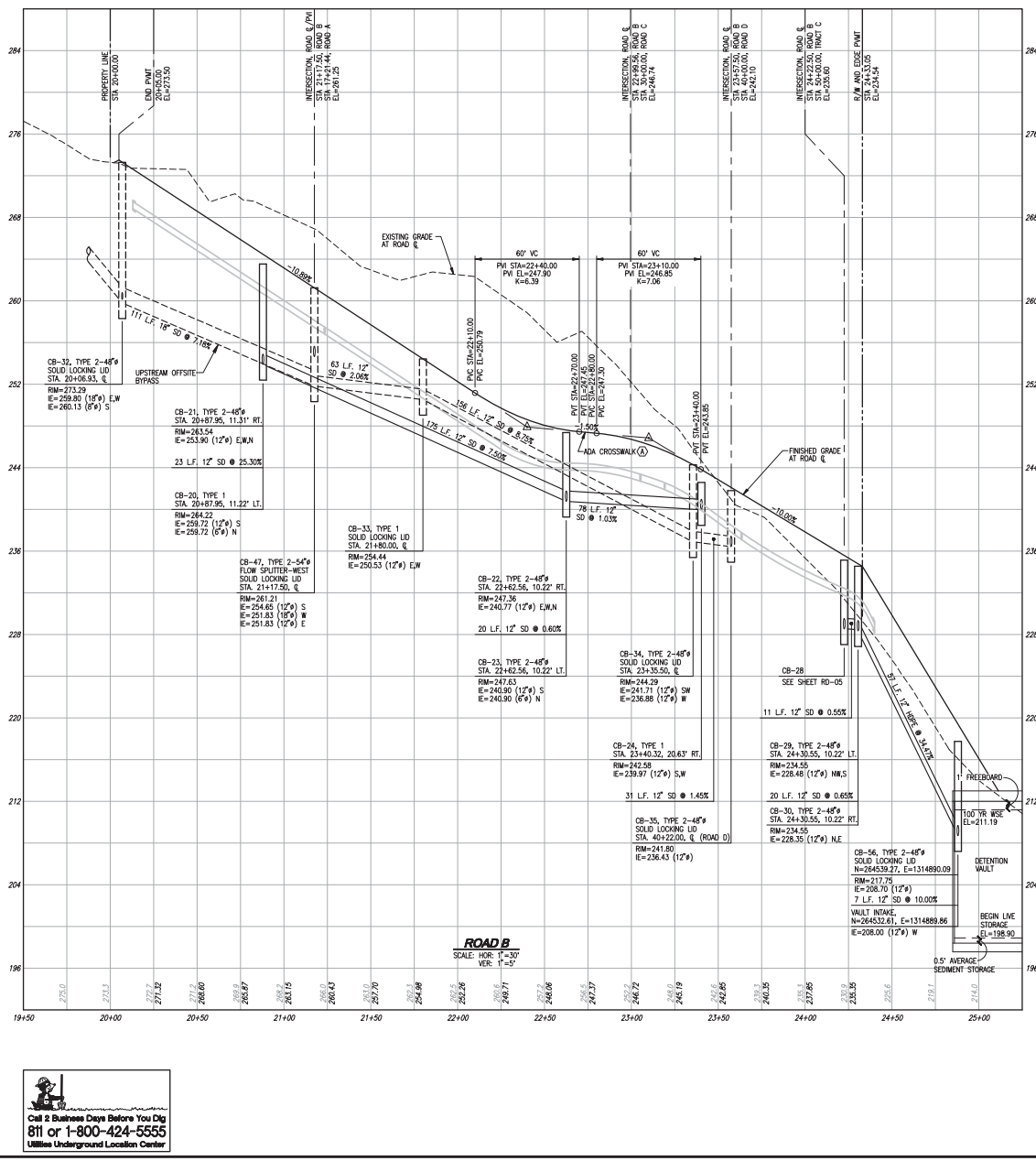

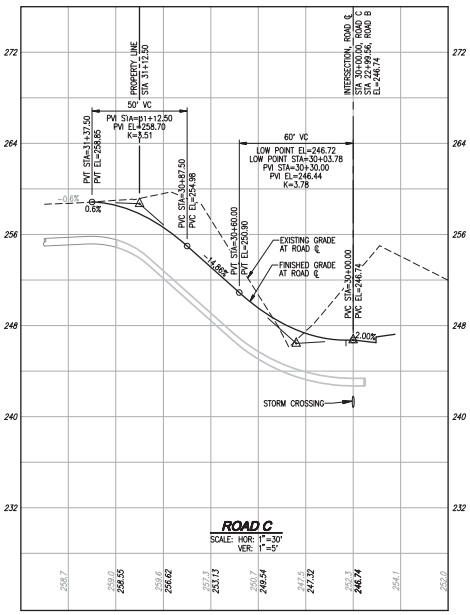

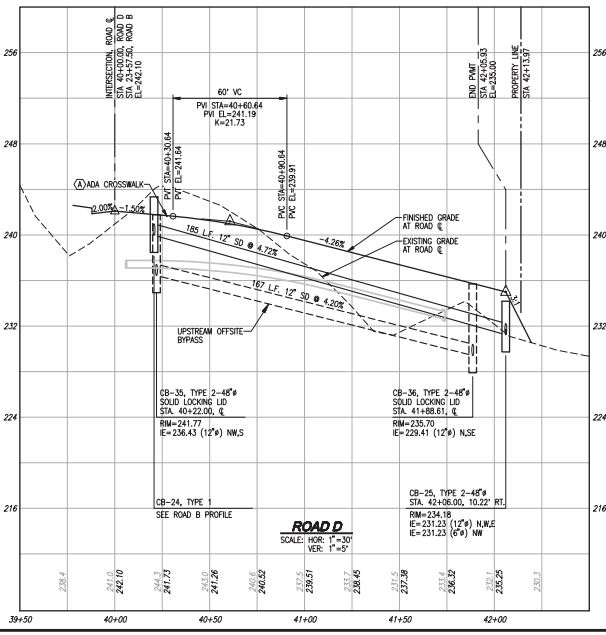

Call 2 Business Days Before You Dig
811 or 1-800-424-5555
Utilities Underground Location Center

REVISIONS

NO.	DATE	DESCRIPTION	BY
1	5-21-15	REVISED PER CITY COMMENTS DATED 2-17-15	MWM
2	6-10-15	MINOR GRADING REVISIONS	MWM

LDC
THE CIVIL ENGINEERING GROUP
Engineering
Structural
Planning
Survey
14501 NE 20th St. #101
Bellevue, WA 98007
Ph. 425.885.1986
Fx. 425.885.9986
www.LDCcorp.com

PULTE GROUP
MARINWOOD
PRELIMINARY ROAD PROFILES

JOB NUMBER:	13-176
DRAWING NAME:	13176P-RD-PR
DESIGNER:	MWM
DRAFTING BY:	RCR
DATE:	2-06-15
SCALE:	AS NOTED
JURISDICTION:	KIRKLAND

RD-04

SHEET 21 OF 35

Drawing: P:\2013\13-176 Kirkland Moore Layout\Drawings\Preliminary\13176P-RD-PR.dwg Plotted: Jun 10, 2015 - 12:52pm

NE 1/4, NW 1/4, SEC 27, TWN 26 N, RGE 5 E, W.M., KING COUNTY, WASHINGTON

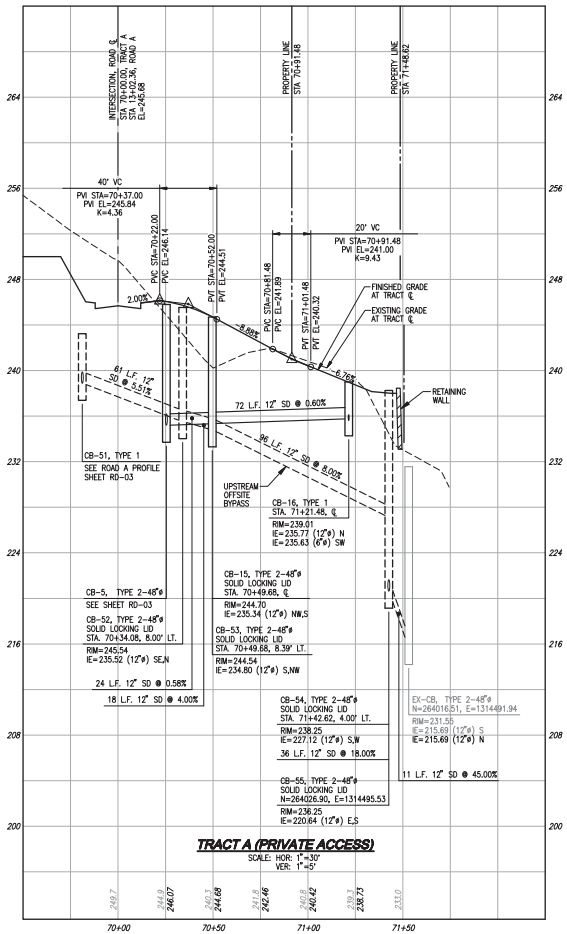

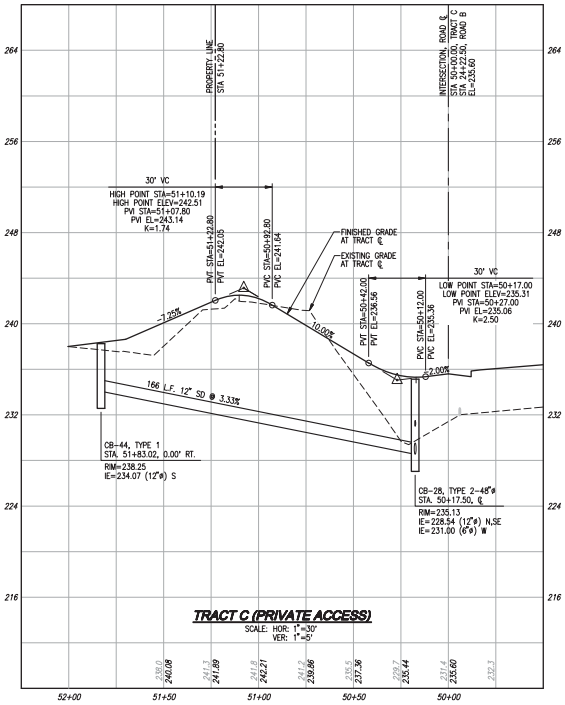

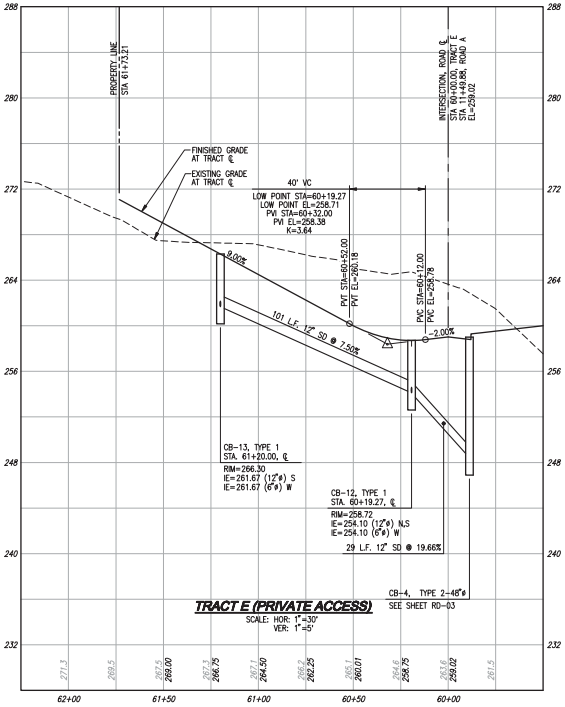

REVISIONS			
NO.	DATE	DESCRIPTION	BY
1	5-21-15	REVISED PER CITY COMMENTS DATED 2-17-15	MWM
2	6-10-15	MINOR GRADING REVISIONS	MWM

LDC
THE CIVIL ENGINEERING GROUP
Engineering
Structural
Planning
Survey
14501 NE 20th St., #100
Bellevue, WA 98007
Ph. 425.885.1986
Fx. 425.885.1886
www.LDCcorp.com

PULTE GROUP

MARINWOOD

PRELIMINARY ROAD PROFILES

MATTHEW MERRITT
STATE OF WASHINGTON
20006
REGISTERED PROFESSIONAL ENGINEER

JOB NUMBER:	13-176
DRAWING NAME:	13176P-RD-PR
DESIGNER:	MWM
DRAFTING BY:	RCR
DATE:	2-06-15
SCALE:	AS NOTED
JURISDICTION:	KIRKLAND

RD-05

SHEET 22 OF 35

Call 2 Business Days Before You Dig
811 or 1-800-424-5555
Utilities Underground Location Center

Drawing: P:\2015\13-176 Kirkland Moore Layout\Drawings\Preliminary\13176P-RD-PR.dwg Plotted: Jun 10, 2015 - 12:52pm

NE 1/4, NW 1/4, SEC 27, TWN 26 N, RGE 5 E, W.M., KING COUNTY, WASHINGTON

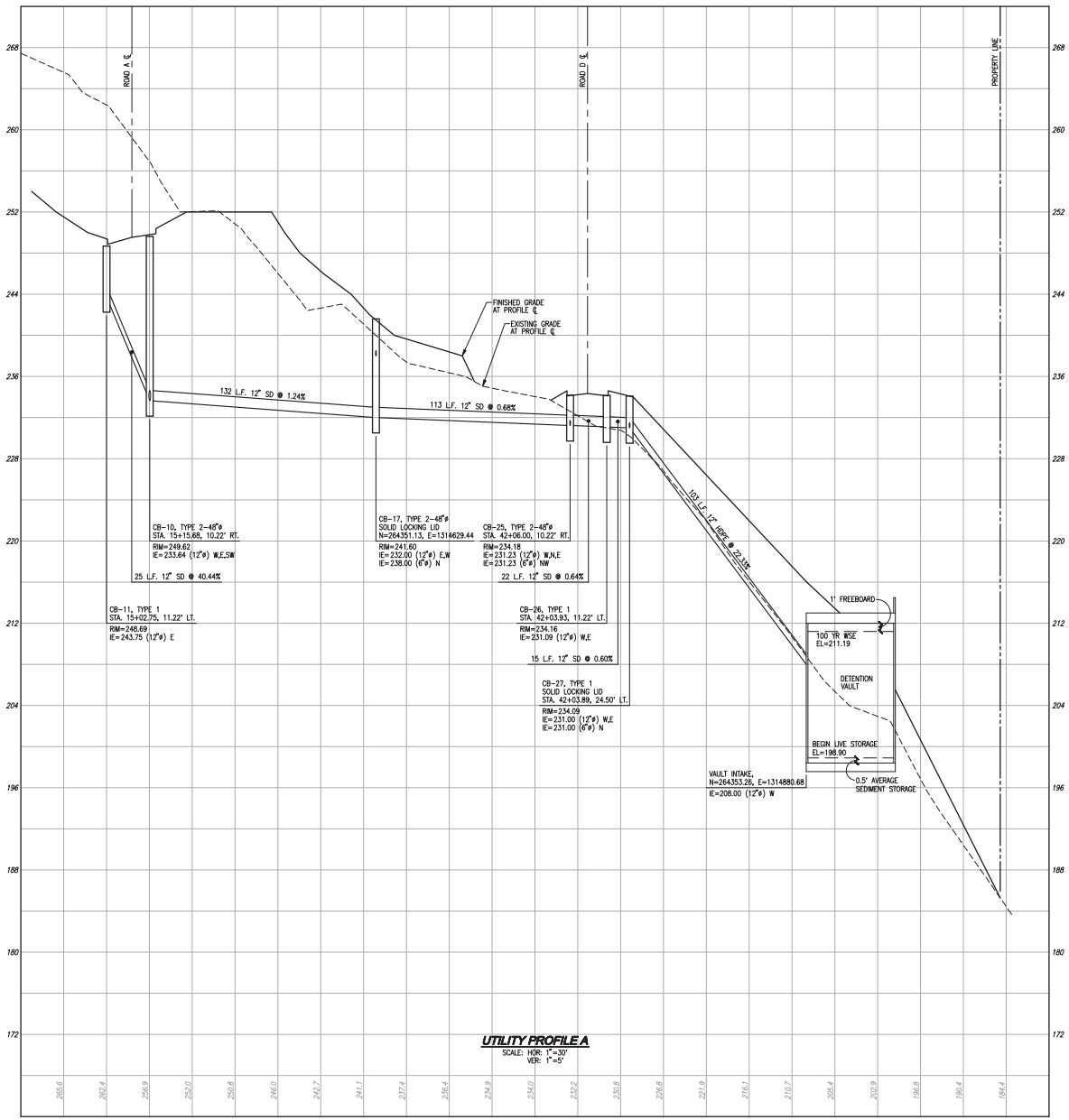

UTILITY PROFILE A
SCALE: HOR: 1"=30'
VER: 1"=5'

Call 2 Business Days Before You Dig
811 or 1-800-424-5555
Utilities Underground Location Center

REVISIONS			
NO.	DATE	DESCRIPTION	BY
1	5-21-15	REVISED PER CITY COMMENTS DATED 2-17-15	MWM
2	6-10-15	MINOR GRADING REVISIONS	MWM

LDC
THE CIVIL ENGINEERING GROUP
Engineering
Structural
Planning
Survey
1401 NE 336th St, #120
Washougal, WA 98671
Ph. 425.885.1986
Fx. 425.427.2626
www.LDCcorp.com

PULTE GROUP
MARINWOOD
PRELIMINARY ROAD PROFILES

JOB NUMBER: 13-176
DRAWING NAME: 13176P-RD-PR
DESIGNER: MWM
DRAFTING BY: RCR
DATE: 2-06-15
SCALE: AS NOTED
JURISDICTION: KIRKLAND

RD-06

SHEET 23 OF 35

Drawing: P:\2015\13-176 Kirkland Moore Layout\Drawings\Preliminary\13176P-RD-PR.dwg Plotted: Jun 10, 2015 - 12:52pm

NE 1/4, NW 1/4, SEC 27, TWN 26 N, RGE 5 E, W.M., KING COUNTY, WASHINGTON

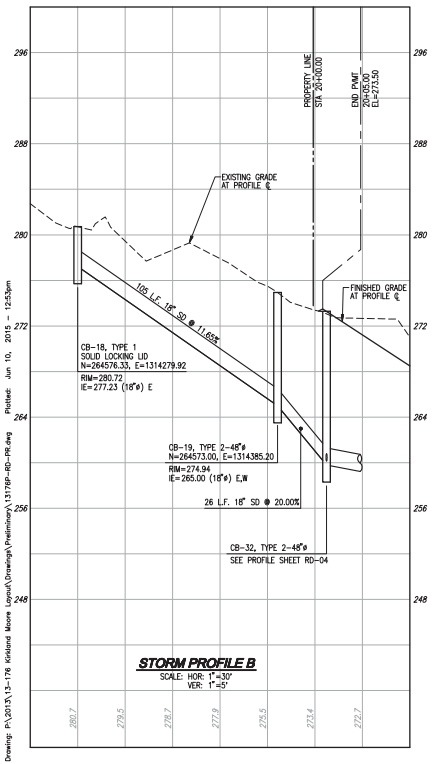

STORM PROFILE B
SCALE: HOR: 1"=30'
VER: 1"=5'

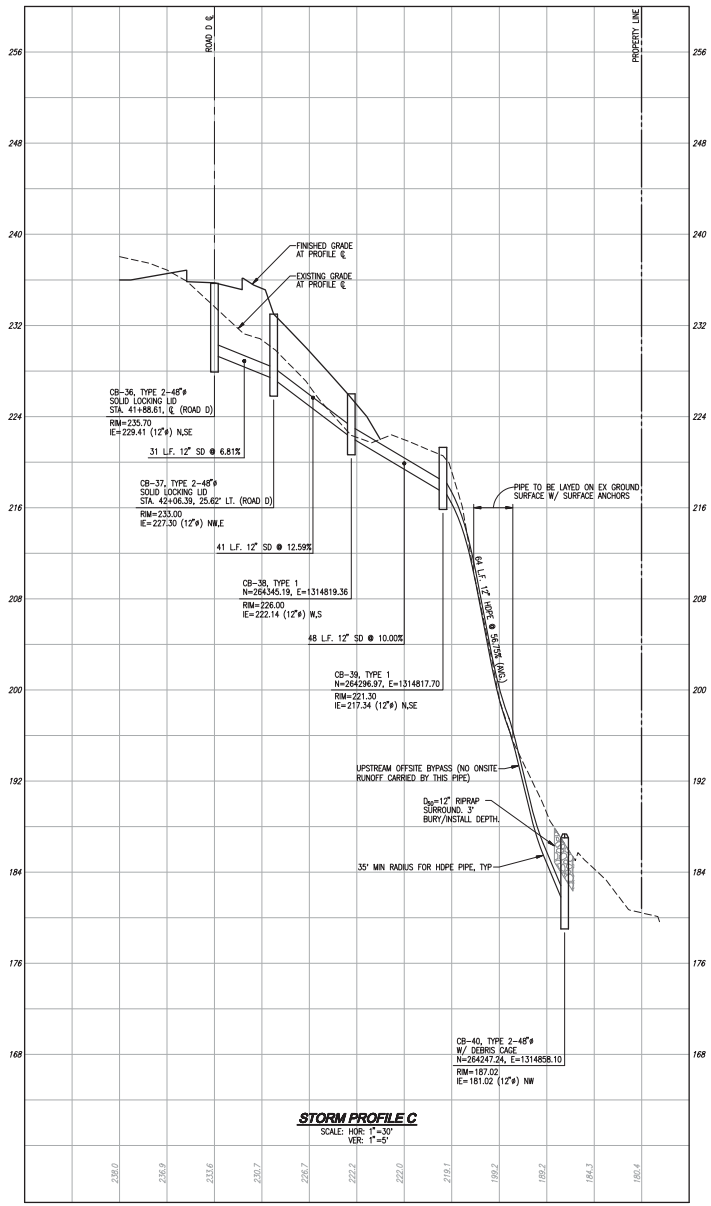

STORM PROFILE C
SCALE: HOR: 1"=30'
VER: 1"=5'

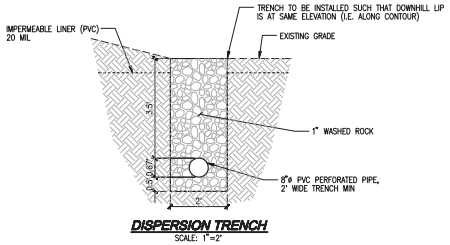

DISPERSION TRENCH
SCALE: 1"=2'

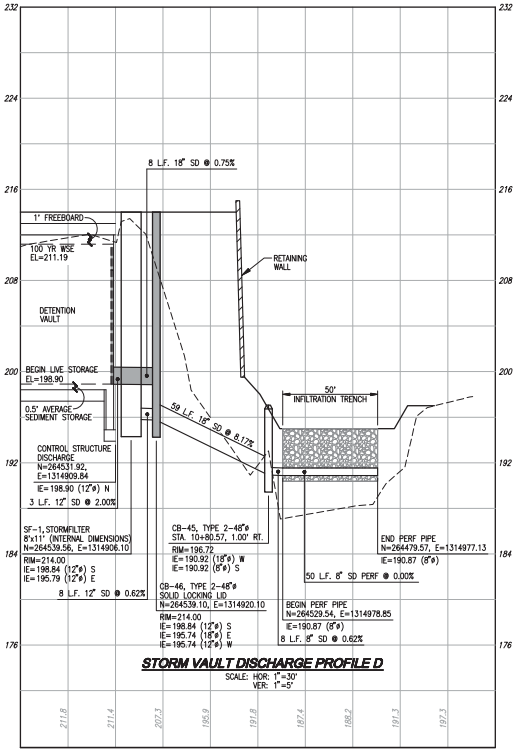

STORM VAULT DISCHARGE PROFILE D
SCALE: HOR: 1"=30'
VER: 1"=5'

Call 2 Business Days Before You Dig
811 or 1-800-424-5555
Utilities Underground Location Center

NO.	DATE	REVISIONS DESCRIPTION	BY
1	5-21-15	REVISED PER CITY COMMENTS DATED 2-17-15	MWM
2	6-10-15	MINOR GRADING REVISIONS	MWM

LDC
THE CIVIL ENGINEERING GROUP
Engineering
Structural
Planning
Survey
14501 NE 20th St. #100
Bellevue, WA 98007
Ph. 425.885.1986
Fx. 425.885.1886
www.LDCcorp.com

PULTE GROUP
MARINWOOD
PRELIMINARY ROAD PROFILES

MATTHEW MERRITT
STATE OF WASHINGTON
20009
REGISTERED PROFESSIONAL ENGINEER

JOB NUMBER:	13-176
DRAWING NAME:	13176P-RD-PR
DESIGNER:	MWM
DRAFTING BY:	RCR
DATE:	2-06-15
SCALE:	AS NOTED
JURISDICTION:	KIRKLAND

RD-07
SHEET 24 OF 35

Drawing: P:\2013\13-176 Kirkland Moore Layout\Drawings\Preliminary\13176P-RD-PR.dwg Plotted: Jun 10, 2015 - 12:53pm

NE 1/4, NW 1/4, SEC 27, TWN 26 N, RGE 5 E, W.M., KING COUNTY, WASHINGTON

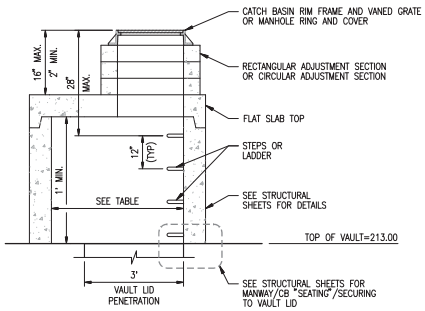

CATCH BASIN TYPE 2 (MAN-WAY / ACCESS)
SCALE: NOT TO SCALE

CATCH BASIN DIAMETER	MIN. WALL THICKNESS	MIN. BASE THICKNESS	MAXIMUM KNOCKOUT SIZE	MINIMUM DISTANCE BETWEEN KNOCKOUTS
48"	4"	6"	36"	8"

NOTES
1. THE RECTANGULAR FRAME AND GRATE MAY BE INSTALLED WITH THE FLANGE UP OR DOWN.
2. THE FRAME MAY BE CAST INTO THE ADJUSTMENT SECTION.

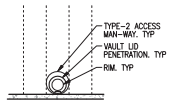

VAULT LID ACCESS DETAIL
SCALE: 1"=10'

IMPERVIOUS COVER

TOTAL NEW IMPERVIOUS COVER:	5.59 AC
TOTAL PGIS:	2.32 AC
IMPERVIOUS COVER (OFFSITE ROW):	0.26 AC
IMPERVIOUS COVER (ONSITE):	5.33 AC
DISTURBED AREA:	8.52 AC
EXISTING CONDITIONS IMPERVIOUS COVER:	<.35%

DETENTION VAULT VOLUME
REQUIRED: 101,376 CF

PROVIDED: 103,680 CF

NOTES
1. SEE SHEET DT-01 FOR STORM DRAINAGE NOTES.

CONTROL RISER NOTES
1. METAL PARTS: CORROSION RESISTANT. ALL BRACKETS AND CONNECTORS TO BE STAINLESS STEEL OR ALUMINUM.
2. FRAME AND LADDER OR STEPS OFFSET SO :
   A. CLEANOUT GATE IS VISIBLE FROM TOP.
   B. CLIMB-DOWN SPACE IS CLEAR OF RISER AND CLEANOUT GATE.
   C. FRAME IS CLEAR OF CURB
3. MANHOLE STEPS TO BE POLYPROPYLENE. MANHOLE LADDERS TO BE ALUMINUM.
4. IF METAL OUTLET PIPE CONNECTS TO CEMENT CONCRETE PIPE: OUTLET PIPE TO HAVE SMOOTH O.D. EQUAL TO CONCRETE PIPE I.D. LESS 1/4".
5. PROVIDE AT LEAST ONE 3"x0.90 GAGE SUPPORT BRACKET ANCHORED TO CONCRETE WALL (MAXIMUM 3'-0" VERTICAL SPACING). ALL BRACKETS AND CONNECTORS TO BE STAINLESS STEEL OR ALUMINUM.
6. LOCATE ELBOW RESTRICTOR(S) AS NECESSARY TO PROVIDE MINIMUM CLEARANCE AS SHOWN.

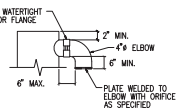

ELBOW RESTRICTOR

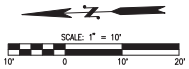

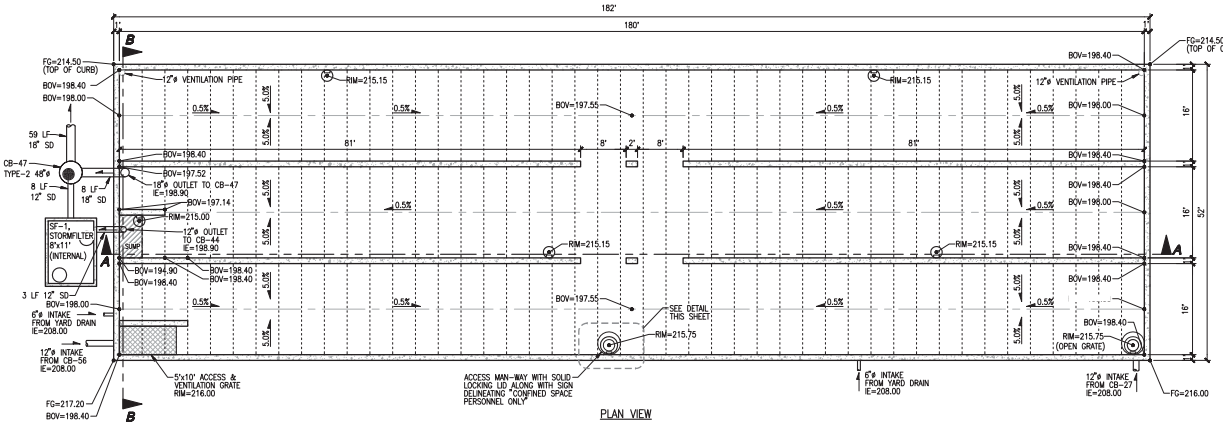

PLAN VIEW

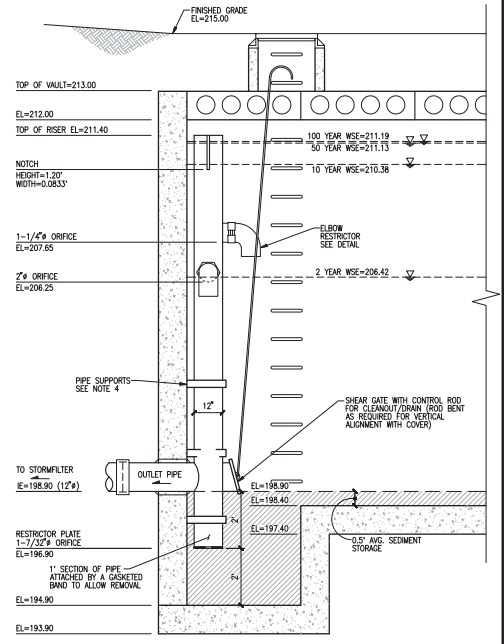

ELEVATION

CONTROL RISER DETAIL
SCALE: 1"=2'

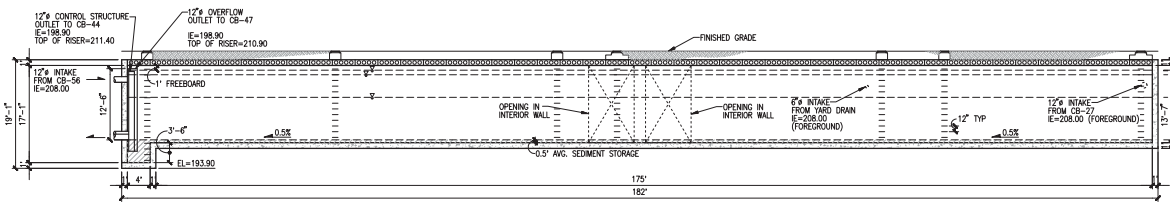

SECTION A-A

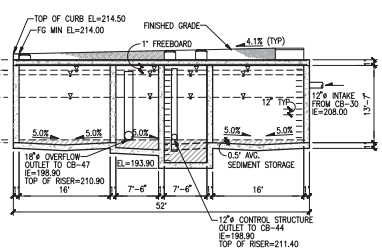

SECTION B-B

STORM DRAINAGE DETENTION VAULT
SCALE: 1"=10'

A SEPARATE PERMIT IS REQUIRED FOR VAULT CONSTRUCTION

Call 2 Business Days Before You Dig
811 or 1-800-424-5555
Utilities Underground Location Center

REVISIONS			
NO.	DATE	DESCRIPTION	BY
1	5-21-15	REVISED PER CITY COMMENTS DATED 2-17-15	MWM
2	6-10-15	MINOR GRADING REVISIONS	MWM

LDC
Engineering
Structural
Planning
Survey
THE CIVIL ENGINEERING GROUP
11401 NE 120th St, #100
Kirkland, WA 98034
Ph. 425.821.3665
Fx. 425.821.3666
www.LDCcorp.com

PULTE GROUP

MARINWOOD

PRELIMINARY STORMWATER DETENTION VAULT PLAN

JOB NUMBER:	13-176
DRAWING NAME:	13176P-SD-VLT
DESIGNER:	MWM
DRAFTING BY:	RCR
DATE:	2-06-15
SCALE:	AS NOTED
JURISDICTION:	KIRKLAND

SD-01

SHEET 25 OF 35

Drawing: P:\2015\13-176 Kirkland Moore Layout\Drawings\Preliminary\13176P-SD-VLT.dwg Plotted: Jun 10, 2015 - 12:54pm

NE 1/4, NW 1/4, SEC 27, TWN 26 N, RGE 5 E, W.M., KING COUNTY, WASHINGTON

STORM DRAINAGE NOTES

1. A PRE-CONSTRUCTION CONFERENCE SHALL BE HELD PRIOR TO THE START OF CONSTRUCTION. THE CONTRACTOR SHALL BE RESPONSIBLE FOR SECURING ALL NECESSARY PERMITS PRIOR TO CONSTRUCTION.
2. BEFORE ANY CONSTRUCTION MAY OCCUR, THE CONTRACTOR SHALL HAVE PLANS WHICH HAVE BEEN SIGNED AND APPROVED BY THE CITY OF KIRKLAND PUBLIC WORKS DEPARTMENT, OBTAINED ALL CITY, COUNTY, STATE, FEDERAL AND OTHER REQUIRED PERMITS, AND HAVE POSTED ALL REQUIRED BONDS.
3. ALL STORM DRAINAGE IMPROVEMENTS SHALL BE DESIGNED AND CONSTRUCTED IN ACCORDANCE WITH THE LATEST EDITION OF THE CITY OF KIRKLAND PUBLIC WORKS PRE-APPROVED PLANS AND POLICIES AND THE STANDARD SPECIFICATIONS FOR ROAD, BRIDGE AND MUNICIPAL CONSTRUCTION, PREPARED BY WSDOT AND THE AMERICAN PUBLIC WORKS ASSOCIATION (APWA).
4. ANY DEVIATION FROM THE APPROVED PLANS WILL REQUIRE WRITTEN APPROVAL, ALL CHANGES SHALL BE SUBMITTED TO THE CITY.
5. A COPY OF THE APPROVED STORM WATER PLANS MUST BE ON THE JOB SITE WHENEVER CONSTRUCTION IS IN PROGRESS.
6. ALL DISTURBED AREAS SHALL BE SEEDED AND MULCHED OR SIMILARLY STABILIZED TO THE SATISFACTION OF THE CITY OF KIRKLAND DEPARTMENT OF PUBLIC WORKS FOR THE PREVENTION OF ON-SITE EROSION AFTER THE COMPLETION OF CONSTRUCTION.
7. MINIMUM COVER OVER STORM DRAINAGE PIPES IN ROW OR VEHICULAR PATH SHALL BE 18 INCHES, UNLESS OTHER DESIGN IS APPROVED.
8. STEEL PIPE SHALL HAVE ASPHALT TREATMENT #1 OR BETTER INSIDE AND OUTSIDE.
9. ALL CATCH BASINS SHALL BE TYPE I UNLESS OTHERWISE NOTED. CATCH BASINS WITH A DEPTH OF OVER FIVE FEET (5') TO THE PIPE INVERT SHALL BE A TYPE II CATCH BASIN. TYPE II CATCH BASINS EXCEEDING FIVE FEET (5') IN DEPTH SHALL HAVE A STANDARD LADDER INSTALLED.
10. ALL STORM DRAINAGE MAIN EXTENSIONS WITHIN THE PUBLIC RIGHT-OF-WAY OR IN EASEMENTS MUST BE STAKED FOR LINE AND GRADE PRIOR TO STARTING CONSTRUCTION.
11. ROCK FOR EROSION PROTECTION OF ROADWAY DITCHES, WHERE REQUIRED, MUST BE OF SOUND QUARRY ROCK, PLACED TO A DEPTH OF ONE FOOT (1') AND MUST MEET THE FOLLOWING SPECIFICATIONS: 4"-8" ROCK/40%-70% PASSING; 2"-4" ROCK/30%-40% PASSING; 2"-MINUS ROCK/10%-20% PASSING.
12. ALL PIPE, MANHOLES, CATCH BASINS, AND APPURTENANCES SHALL BE LAID ON A PROPERLY PREPARED FOUNDATION IN ACCORDANCE WITH THE CURRENT STATE OF WASHINGTON STANDARD SPECIFICATIONS FOR ROAD AND BRIDGE CONSTRUCTION (WSDOT). THIS SHALL INCLUDE NECESSARY LEVELING OF THE TRENCH BOTTOM OR THE TOP OF THE FOUNDATION MATERIAL AS WELL AS PLACEMENT AND COMPACTION OF REQUIRED BEDDING MATERIAL TO UNIFORM GRADE SO THAT THE ENTIRE LENGTH OF THE PIPE WILL BE SUPPORTED ON A UNIFORMLY DENSE, UNYIELDING BASE. IF THE NATIVE MATERIAL IN THE BOTTOM OF THE TRENCH MEETS THE REQUIREMENTS FOR "GRAVEL BACKFILL FOR PIPE BEDDING," THE FIRST LIFT OF PIPE BEDDING MAY BE OMITTED PROVIDED THE MATERIAL IN THE BOTTOM OF THE TRENCH IS LOOSENED, REGRADED, AND COMPACTED TO FORM A DENSE UNYIELDING BASE. ALL PIPE BEDDING SHALL BE APWA CLASS B, TYPE I, OR BETTER. PIPE SHALL NOT BE INSTALLED ON SOD, FROZEN EARTH, LARGE BOULDERS, OR ROCK. PIPE BEDDING FOR FLEXIBLE PIPES SHALL BE PEA GRAVEL TO THE SPRINGLINE OF THE PIPE.
13. CONSTRUCTION OF DEWATERING (GROUNDWATER) SYSTEMS SHALL BE IN ACCORDANCE WITH THE APWA STANDARD SPECIFICATIONS.
14. ISSUANCE OF A BUILDING OR LAND SURFACE MODIFICATION PERMIT BY THE CITY OF KIRKLAND DOES NOT RELIEVE THE OWNER OF THE CONTINUING LEGAL OBLIGATION AND/OR LIABILITY CONNECTED WITH STORM SURFACE WATER DISPOSITION. FURTHER, THE CITY OF KIRKLAND DOES NOT ACCEPT ANY OBLIGATION FOR THE PROPER FUNCTIONING AND MAINTENANCE OF THE SYSTEM DURING OR FOLLOWING CONSTRUCTION EXCEPT AS OUTLINED IN THE CITY OF KIRKLAND PUBLIC WORKS STANDARDS.
15. ALL TRENCH BACKFILL SHALL BE COMPACTED TO 95 PERCENT DENSITY IN ROADWAYS, ROADWAY SHOULDERS, ROADWAY PRISM AND DRIVEWAYS, AND 85 PERCENT DENSITY IN UNPAVED AREAS. ALL PIPE ZONE COMPACTION SHALL BE 95 PERCENT.
16. THE CONTRACTOR SHALL BE RESPONSIBLE FOR PROVIDING ADEQUATE SAFEGUARDS, SAFETY DEVICES, PROTECTIVE EQUIPMENT, CONFINED SPACE PROTECTION, FLAGGERS, AND ANY OTHER NEEDED ACTIONS TO PROTECT THE LIFE, HEALTH, AND SAFETY OF THE PUBLIC, AND TO PROTECT PROPERTY IN CONNECTION WITH THE PERFORMANCE OF WORK COVERED BY THE CONTRACT. ANY WORK WITHIN THE TRAVELED RIGHT-OF-WAY THAT MAY INTERRUPT NORMAL TRAFFIC FLOW SHALL REQUIRE A TRAFFIC CONTROL PLAN APPROVED BY THE CITY OF KIRKLAND. ALL SECTIONS OF THE WSDOT STANDARD SPECIFICATIONS, TRAFFIC CONTROL, AND THE MANUAL OF UNIFORM TRAFFIC CONTROL DEVICES (MUTCD) SHALL APPLY.
17. NO FINAL CUT OR FILL SLOPE SHALL EXCEED SLOPES OF TWO (2) HORIZONTAL TO ONE (1) VERTICAL WITHOUT STABILIZATION BY ROCKERY OR BY A STRUCTURAL RETAINING WALL.
18. ALL MANHOLE LADDERS SHALL BE FIRMLY ATTACHED AND EXTEND TO WITHIN 1' OF THE BOTTOM OF THE STRUCTURE.
19. APPROXIMATE LOCATIONS OF EXISTING UTILITIES HAVE BEEN OBTAINED FROM AVAILABLE RECORDS AND ARE SHOWN FOR CONVENIENCE. THE CONTRACTOR SHALL BE RESPONSIBLE FOR VERIFICATION OF EXISTING UTILITY LOCATIONS WHETHER OR NOT THESE UTILITIES ARE SHOWN ON THE PLANS. THE CONTRACTOR SHALL EXERCISE ALL CARE TO AVOID DAMAGE TO ANY UTILITY. IF CONFLICTS WITH EXISTING UTILITIES ARISE DURING CONSTRUCTION, THE CONTRACTOR SHALL NOTIFY THE CITY CONSTRUCTION INSPECTOR AND ANY CHANGES REQUIRED SHALL BE APPROVED BY THE DEVELOPMENT ENGINEER PRIOR TO COMMENCEMENT OF RELATED CONSTRUCTION ON THE PROJECT.
20. THE UNDERGROUND UTILITY LOCATION SERVICE SHALL BE CONTACTED FOR FIELD LOCATION OF EXISTING UTILITIES PRIOR TO ANY CONSTRUCTION. THE OWNER OR HIS REPRESENTATIVE SHALL BE CONTACTED IF A UTILITY CONFLICT EXISTS. FOR UTILITY LOCATION IN KING COUNTY, CALL 1-800-424-5555. THE CONTRACTOR IS RESPONSIBLE TO ENSURE THAT UTILITY LOCATES ARE MAINTAINED THROUGHOUT THE LIFE OF THE PROJECT.
21. THE CONTRACTOR SHALL VERIFY THE LOCATIONS, WIDTHS, THICKNESSES, AND ELEVATIONS OF ALL EXISTING PAVEMENTS AND STRUCTURES THAT ARE TO INTERFACE WITH NEW WORK. PROVIDE ALL TRIMMING, CUTTING, SAW CUTTING, GRADING, LEVELING, SLOPING, COATING, AND OTHER WORK, INCLUDING MATERIALS AS NECESSARY, TO CAUSE THE INTERFACE WITH EXISTING WORKS TO BE PROPER, ACCEPTABLE TO THE ENGINEER AND THE CITY OF KIRKLAND, COMPLETE IN PLACE AND READY TO USE.
22. ALL INLET, MANHOLE, AND CATCH BASIN FRAMES AND GRATES SHALL NOT BE ADJUSTED TO GRADE UNTIL IMMEDIATELY PRIOR TO FINAL PAVING. ALL CATCH BASIN GRATES SHALL BE SET 0.10' BELOW PAVEMENT LEVEL.
23. OPEN CUT ROAD CROSSINGS FOR UTILITY TRENCHES ON EXISTING TRAVELED ROADWAY SHALL BE BACKFILLED ONLY WITH 5/8" MINUS CRUSHED ROCK AND MECHANICALLY COMPACTED (UNLESS OTHERWISE APPROVED BY THE CITY). FOR STREETS CLASSIFIED AS ARTERIALS OR COLLECTORS, BACKFILL FOR CROSSINGS SHALL BE CDF. CUTS INTO THE EXISTING ASPHALT SHALL BE NEAT LINE CUT WITH SAW OR JACKHAMMER IN A CONTINUOUS LINE. A TEMPORARY COLD MIX PATCH MUST BE PLACED IMMEDIATELY AFTER BACKFILL AND COMPACTION. A PERMANENT HOT MIX PATCH SHALL BE PLACED WITHIN 30 DAYS AND SHALL BE A MINIMUM OF 1" THICKER THAN THE ORIGINAL ASPHALT WITH A MINIMUM THICKNESS OF 2". SEE STANDARD D.02.
24. ALL DAMAGES INCURRED TO PUBLIC AND/OR PRIVATE PROPERTY BY THE CONTRACTOR DURING THE COURSE OF CONSTRUCTION SHALL BE PROMPTLY REPAIRED TO THE SATISFACTION OF THE CITY CONSTRUCTION INSPECTOR BEFORE PROJECT APPROVAL AND/OR THE RELEASE OF THE PROJECT'S PERFORMANCE BOND.
25. GROUT ALL SEAMS AND OPENINGS IN ALL INLETS, CATCH BASINS, AND MANHOLES. JETSET GROUT IS NOT ALLOWED.
26. WHEN WIDENING AN EXISTING ROADWAY WHERE AN EXISTING TYPE I CATCH BASIN WILL REMAIN IN THE TRAVEL LANE, THE EXISTING FRAME AND COVER SHALL BE REPLACED WITH A ROUND, LOCKING FRAME AND COVER.
27. FOR OTHER THAN SINGLE-FAMILY DWELLINGS, ALL EXPOSED OR READILY EXPOSED INDOOR STORM DRAINAGE PIPING/PLUMBING SHALL BE LABELED WITH THE WORDS "STORM DRAIN" WITH MINIMUM 2 INCH HIGH LETTERS.

GENERAL ROADWAY NOTES

1. A PRE-CONSTRUCTION CONFERENCE SHALL BE HELD PRIOR TO THE START OF CONSTRUCTION. THE CONTRACTOR SHALL BE RESPONSIBLE FOR SECURING ALL NECESSARY PERMITS PRIOR TO CONSTRUCTION.
2. ALL ROADWAY WORK AND MATERIAL SHALL BE IN ACCORDANCE WITH THE CURRENT APWA AND CITY OF KIRKLAND STANDARDS AND SPECIFICATIONS.
3. ALL PUBLIC ROADWAYS SHALL BE CONSTRUCTED OF 2" CLASS "B" AC PAVING ON 4" ASPHALT-TREATED BASE (ATB), UNLESS OTHERWISE APPROVED BY THE PUBLIC WORKS DEPARTMENT.
4. A COPY OF THE APPROVED ROADWAY PLANS MUST BE ON THE JOB SITE WHENEVER CONSTRUCTION IS IN PROGRESS.
5. DENSITY TEST REPORTS WILL BE REQUIRED FOR ALL PUBLIC ROADWAYS AND ALL PRIVATE ROADWAYS WITHIN PLATS. ALL TRENCH BACKFILL SHALL BE COMPACTED TO 95 PERCENT DENSITY IN ROADWAYS, ROADWAY SHOULDERS, ROADWAY PRISM AND DRIVEWAYS, AND 85 PERCENT DENSITY IN UNPAVED AREAS. ALL PIPE ZONE COMPACTION SHALL BE 95 PERCENT.
6. ALL COMMERCIAL AND RESIDENTIAL DRIVEWAYS MUST CONFORM TO THE CITY OF KIRKLAND DEPARTMENT OF PUBLIC WORKS DRIVEWAY POLICY.
7. ALL CONCRETE FOR SIDEWALKS AND CURB AND GUTTER MUST BE 4,000 PSI MINIMUM. (5-3/4 SACK MIX.)
8. IN THE CASE OF NEW ROAD CONSTRUCTION OR RECONSTRUCTION REQUIRING MAILBOXES TO BE MOVED OR REARRANGED, THE DEVELOPER/CONTRACTOR SHALL COORDINATE WITH THE U.S. POSTAL SERVICE FOR THE NEW LOCATION OF THE MAILBOX STRUCTURE.
9. ANY ROADWAY SIGNAGE OR STRIPING REMOVED OR TEMPORARILY MOVED BY THE CONTRACTOR SHALL BE RESTORED SO AS TO MEET THE CURRENT CITY OF KIRKLAND STANDARDS.
10. IT IS THE RESPONSIBILITY OF THE CONTRACTOR TO PROVIDE ADEQUATE TEMPORARY TRAFFIC CONTROL TO ENSURE TRAFFIC SAFETY DURING CONSTRUCTION ACTIVITIES. THEREFORE, THE CONTRACTOR SHALL SUBMIT A TRAFFIC CONTROL PLAN TO THE PUBLIC WORKS DEPARTMENT AT LEAST 48 HOURS PRIOR TO STARTING ANY WORK IN THE RIGHT-OF-WAY. ALL TRAFFIC CONTROL DEVICES SHALL CONFORM TO THE "MANUAL ON UNIFORM TRAFFIC CONTROL DEVICES" (MUTCD) OR AS MODIFIED BY THE TRAFFIC ENGINEER.
11. WHERE A SIDEWALK IS TO BE CONSTRUCTED ABOVE A SLOPE OR ADJACENT TO A ROCKERY OR RETAINING WALL WHERE THE LOWEST FINISHED ELEVATION OF THE SLOPE, ROCKERY, OR RETAINING WALL IS TO BE THIRTY INCHES (30") OR MORE BELOW THE FINISHED ELEVATION OF THE SIDEWALK, A SAFETY RAILING SHALL BE REQUIRED WHEN: (A) THE PLANE OF THE WALL FACE IS LESS THAN 4' IN HORIZONTAL DISTANCE FROM THE OUTSIDE EDGE OF THE SIDEWALK; (B) THE SLOPES ADJACENT TO THE SIDEWALK AVERAGE GREATER THAN TWO TO ONE.
12. THE MAXIMUM GRADE FOR PRIVATE ROADWAYS SHALL BE TWENTY PERCENT (20%), OR FIFTEEN PERCENT (15%) IF USED FOR FIRE ACCESS. FOR PUBLIC ROADWAYS, THE MAXIMUM GRADE SHALL BE FIFTEEN PERCENT (15%).
13. DEAD-END STREETS SHALL BE APPROPRIATELY SIGNED AND BARRICADED. SEE MOST CURRENT EDITION OF THE MUTCD.
14. SIDEWALK AND CURB AND GUTTER CANNOT BE POURED MONOLITHICALLY. THERE MUST BE A COLD JOINT OR FULL-DEPTH EXPANSION JOINT BETWEEN THEM.
15. MEASURES SHALL BE TAKEN BY THE DEVELOPER TO PROVIDE GROUND COVER IN AREAS WITHIN THE RIGHT-OF-WAY WHICH HAVE BEEN STRIPPED OF NATURAL VEGETATION OR HAVE A POTENTIAL FOR EROSION.
16. THE DEVELOPER SHALL COORDINATE WITH PUGET POWER FOR THE DESIGN AND INSTALLATION OF STREET LIGHTS ON ALL NEWLY-CREATED PUBLIC ROADWAYS AND EXISTING ROADWAYS.
17. WHEN AN EXISTING ROADWAY IS TO RECEIVE A HALF-STREET OVERLAY, THE EXISTING ROADWAY MUST BE COLD PLANED AT THE EDGE OF THE GUTTER AND CENTERLINE. WHEN THE EXISTING ROADWAY IS TO RECEIVE A FULL-STREET OVERLAY, IT MUST BE COLD PLANED AT THE EDGE OF BOTH GUTTERS. SEE CITY OF KIRKLAND STANDARD DETAIL NO. R.13.
18. ALL NEW SIGNS REQUIRED IN THE PUBLIC RIGHT-OF-WAY MUST BE PURCHASED FROM, AND INSTALLED BY, THE CITY OF KIRKLAND PUBLIC WORKS DEPARTMENT.
19. WHEN INSTALLING NEW SIDEWALK, THE AREA BEHIND THE SIDEWALK MUST BE GRADED SO THAT THE YARD DRAINAGE DOES NOT DRAIN OVER THE SIDEWALK.
20. ANY EXISTING PUBLIC IMPROVEMENTS DAMAGED DURING CONSTRUCTION SHALL BE REPLACED PRIOR TO FINAL INSPECTION.
21. THE CONTRACTOR IS RESPONSIBLE FOR KEEPING ALL PUBLIC STREETS FREE FROM MUD AND DEBRIS AT ALL TIMES. THE CONTRACTOR SHALL BE PREPARED TO USE POWER SWEEPERS OR OTHER PIECES OF EQUIPMENT NECESSARY TO KEEP THE ROADWAYS CLEAN.
22. BACKFILL IN ALL STREET CUTS ON ARTERIALS WILL BE CONTROL DENSITY FILL (CDF). CONTRACTOR MUST PROVIDE STEEL PLATING NECESSARY TO ALLOW THE CDF TO CURE.
23. WHEN CONSTRUCTING NEW CURB AND GUTTER WHICH DOES NOT ALIGN WITH THE EXISTING EDGE OF PAVEMENT, THE ROADWAY MUST BE TAPERED FROM THE ENDS OF THE NEW CURB AND GUTTER TO MATCH THE EXISTING PAVEMENT. THE ENTRY TAPER INTO THE NEW IMPROVEMENTS SHALL BE 5:1, AND LEAVING THE NEW IMPROVEMENTS SHALL BE 10:1.
24. WHEN AN EXISTING ROADWAY IS TO BE WIDENED, THE EXISTING PAVEMENT MUST BE SAW CUT AT LEAST ONE FOOT FROM THE EDGE TO PROVIDE A PROPER MATCH BETWEEN NEW AND EXISTING ASPHALT. HOWEVER, WHEN THE EXISTING PAVEMENT CONTAINS ALLIGATORED AREAS, THOSE AREAS MUST BE REMOVED PRIOR TO WIDENING. ALL SAW CUTS SHALL BE PARALLEL OR PERPENDICULAR TO THE RIGHT-OF-WAY CENTERLINE.
25. ALL ROCKERIES MUST BE CONSTRUCTED IN ACCORDANCE WITH THE MOST CURRENT GUIDELINES OF THE ASSOCIATION.

FLOW SPLITTER-WEST CB-47

SCALE: 1"=2'

FLOW SPLITTER NOTES

1. METAL PARTS: CORROSION RESISTANT. NON-GALVANIZED PARTS PREFERRED. GALVANIZED PIPE PARTS TO HAVE ASPHALT TREATMENT 1.
2. FRAME AND LADDER OR STEPS OFFSET SO :
   A. CLEANOUT GATE IS VISIBLE FROM TOP.
   B. CLIMB-DOWN SPACE IS CLEAR OF RISER AND CLEANOUT GATE.
   C. FRAME IS CLEAR OF CURB
3. IF METAL OUTLET PIPE CONNECTS TO CEMENT CONCRETE PIPE: OUTLET PIPE TO HAVE SMOOTH O.D. EQUAL TO CONCRETE PIPE I.D. LESS 1/4".
4. PROVIDE AT LEAST ONE 3"x0.90 GAGE SUPPORT BRACKET ANCHORED TO CONCRETE WALL (MAXIMUM 3'-0" VERTICAL SPACING).

Drawing: P:\2013\13-176 Kirkland Moore Layout\Drawings\Preliminary\13176P-RD-DT.dwg Plotted: Jun 10, 2015 - 12:55pm

REVISIONS

NO.	DATE	DESCRIPTION	BY
1	5-21-15	REVISED PER CITY COMMENTS DATED 2-17-15	MWM
2	6-10-15	MINOR GRADING REVISONS	MWM

LDC
THE CIVIL ENGINEERING GROUP
Engineering
Structural
Planning
Survey
14201 NE 200th St, #100
Woodinville, WA 98072
Ph. 425.806.1869
Fx. 425.482.2893
www.LDCcorp.com

PULTE GROUP

MARINWOOD

NOTES AND DETAILS

MATTHEW MERRITT — STATE OF WASHINGTON — 46848 — REGISTERED PROFESSIONAL ENGINEER — 6-10-15

JOB NUMBER:	13-176
DRAWING NAME:	13176P-RD-DT
DESIGNER:	MWM
DRAFTING BY:	RCR
DATE:	2-06-15
SCALE:	AS NOTED
JURISDICTION:	KIRKLAND

DT-01

SHEET **26** OF **35**

NE 1/4, NW 1/4, SEC 27, TWN 26 N, RGE 5 E, W.M., KING COUNTY, WASHINGTON

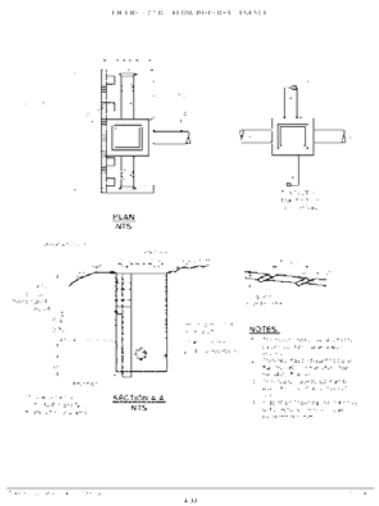

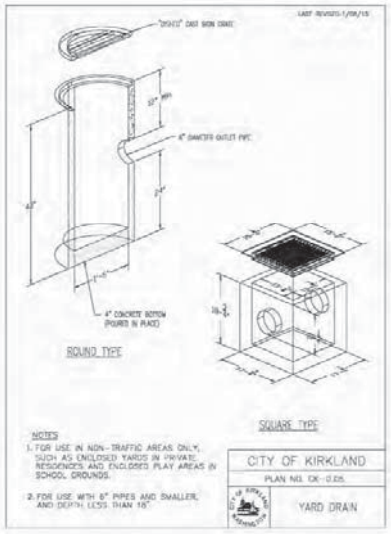

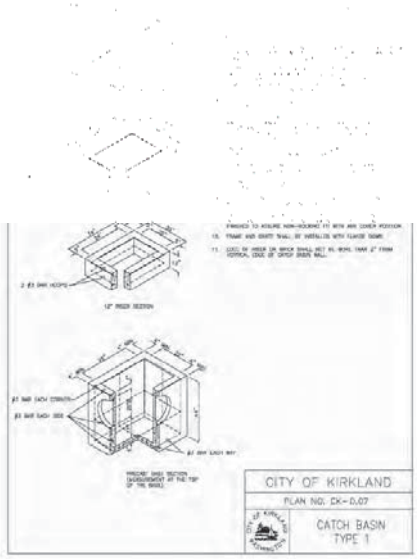

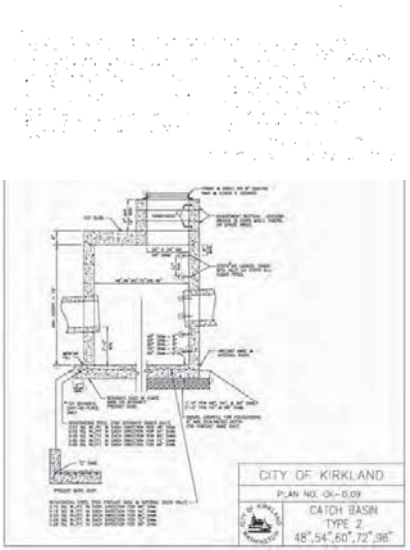

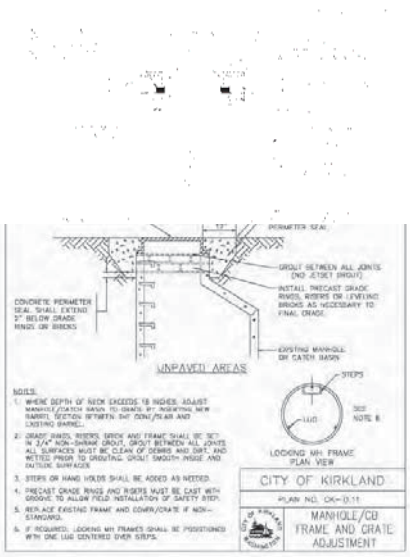

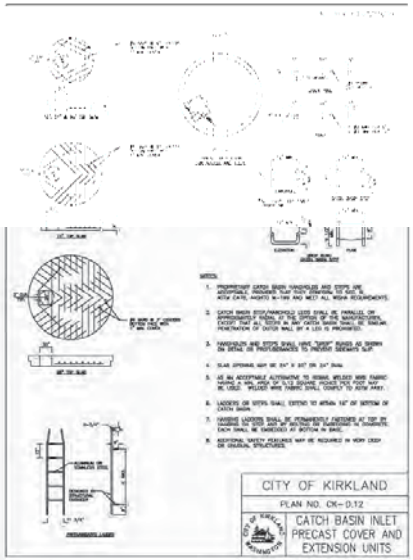

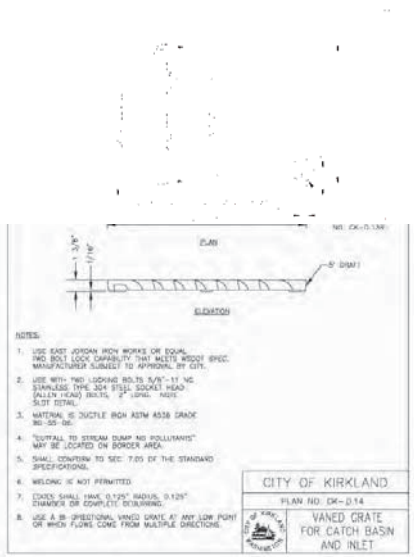

REVISIONS

NO.	DATE	DESCRIPTION	BY
1	5-21-15	REVISED PER CITY COMMENTS DATED 2-17-15	MWM
2	6-10-15	MINOR GRADING REVISIONS	MWM

LDC
Engineering
Structural
Planning
Survey
THE CIVIL ENGINEERING GROUP
14501 NE 20th St. #100
Bellevue, WA 98007
Ph. 425.885.1986
Fx. 425.885.4885
www.LDCcorp.com

PULTE GROUP
MARINWOOD

NOTES AND DETAILS

MATTHEW MERRITT
STATE OF WASHINGTON
21609
REGISTERED PROFESSIONAL ENGINEER

JOB NUMBER:	13-176
DRAWING NAME:	13176P-RD-DT
DESIGNER:	MWM
DRAFTING BY:	RGR
DATE:	2-06-15
SCALE:	AS NOTED
JURISDICTION:	KIRKLAND

DT-02

SHEET 27 OF 35

Drawing: P:\2013\13-176 Kirkland Moore Layout\Drawings\Preliminary\13176P-RD-DT.dwg Plotted: Jun 10, 2015 - 12:56pm

NE 1/4, NW 1/4, SEC 27, TWN 26 N, RGE 5 E, W.M., KING COUNTY, WASHINGTON

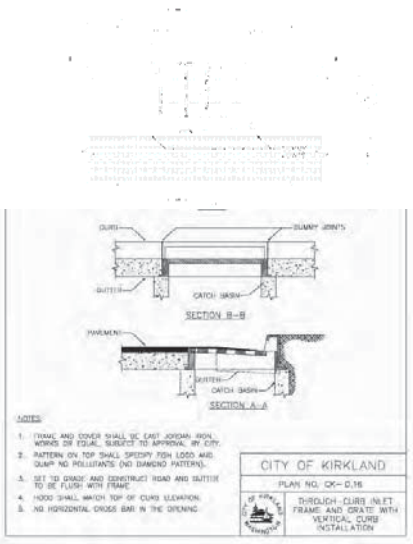

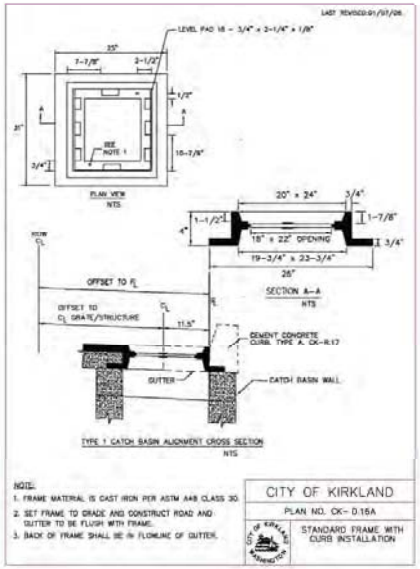

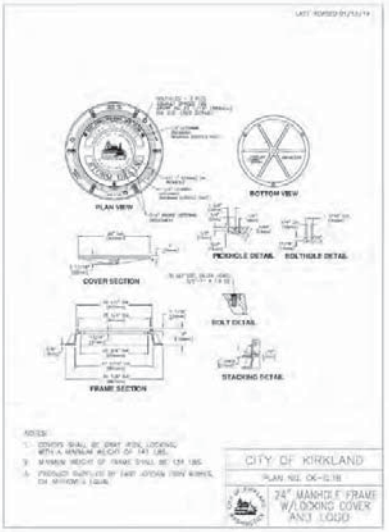

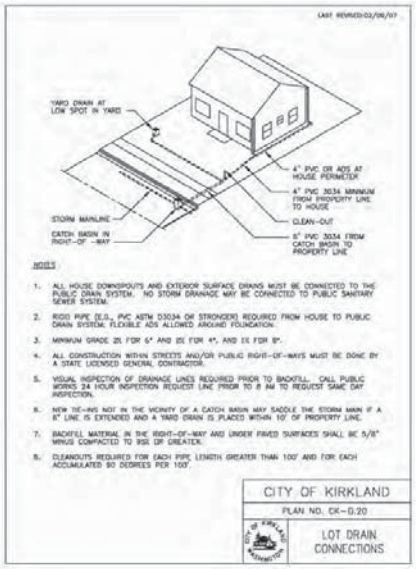

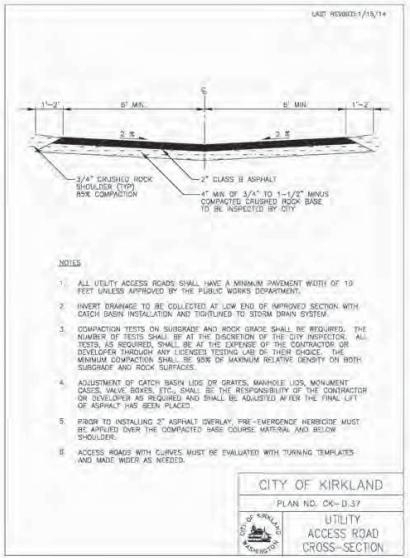

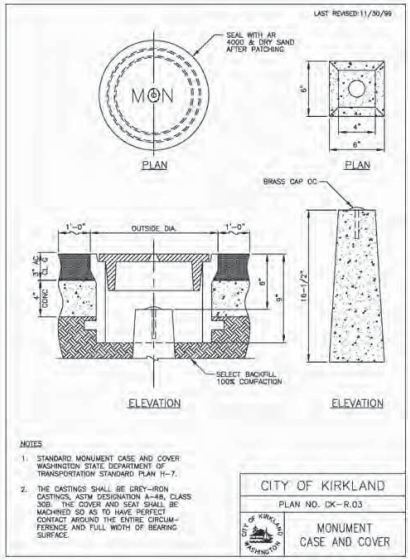

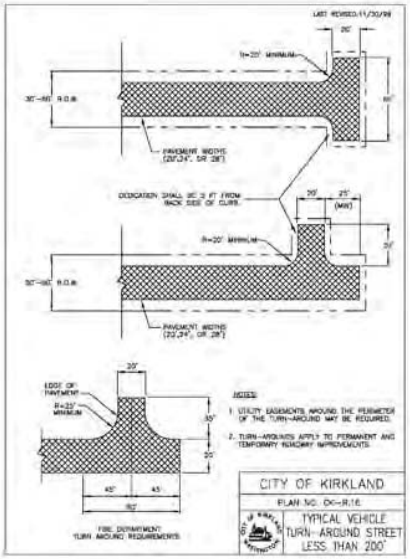

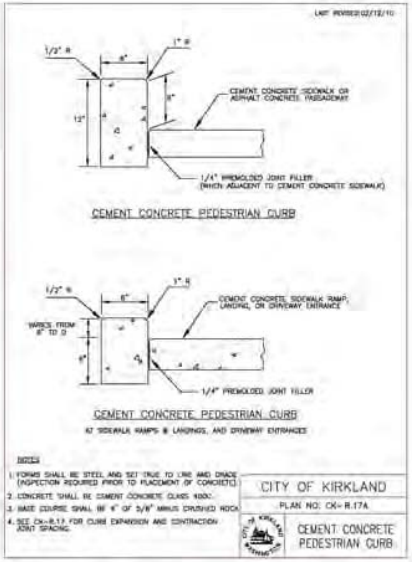

REVISIONS

NO.	DATE	DESCRIPTION	BY
1	5-21-15	REVISED PER CITY COMMENTS DATED 2-17-15	MWM
2	6-10-15	MINOR GRADING REVISIONS	MWM

LDC
THE CIVIL ENGINEERING GROUP
Engineering
Structural
Planning
Survey
14501 NE 20th St. #100
Bellevue, WA 98007
Ph. 425.885.1986
Fx. 425.885.1886
www.LDCcorp.com

PULTE GROUP
MARINWOOD
NOTES AND DETAILS

MATTHEW MERRITT
REG. NO. 20006
REGISTERED PROFESSIONAL ENGINEER
STATE OF WASHINGTON

JOB NUMBER:	13-176
DRAWING NAME:	13176P-RD-01
DESIGNER:	MWM
DRAFTING BY:	RGR
DATE:	2-06-15
SCALE:	AS NOTED
JURISDICTION:	KIRKLAND

DT-03

SHEET 28 OF 35

Drawing: P:\2013\13-176 Kirkland Moore Layout\Drawings\Preliminary\13176P-RD-07.dwg Plotted: Jun 10, 2015 - 12:56pm

NE 1/4, NW 1/4, SEC 27, TWN 26 N, RGE 5 E, W.M., KING COUNTY, WASHINGTON

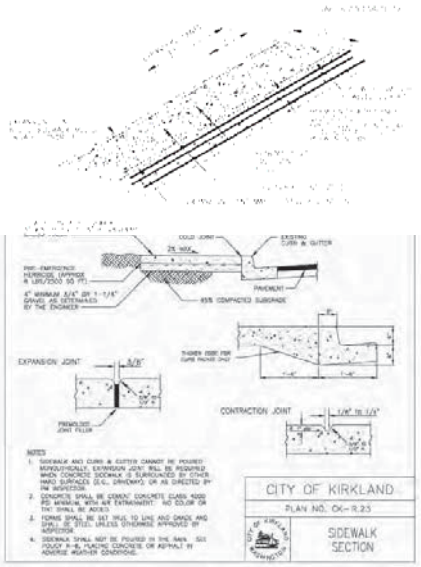

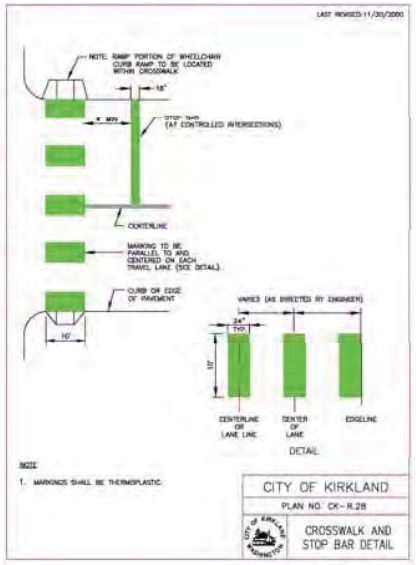

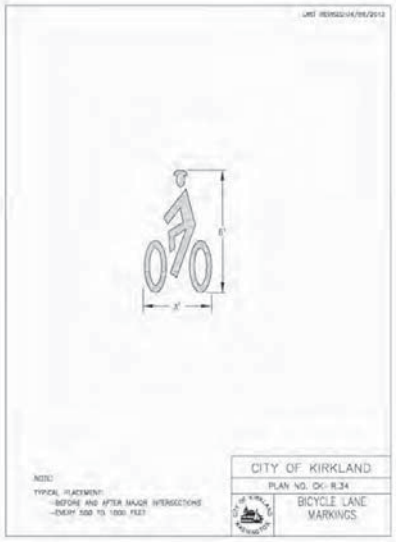

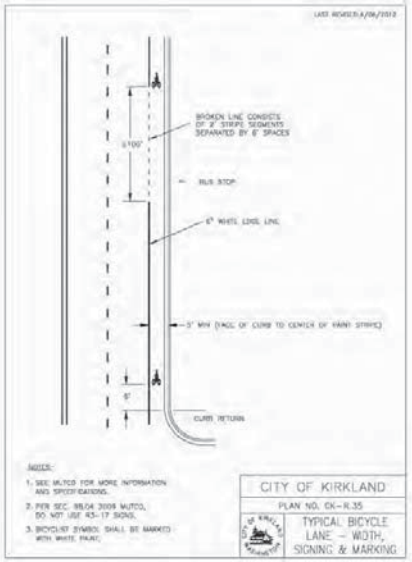

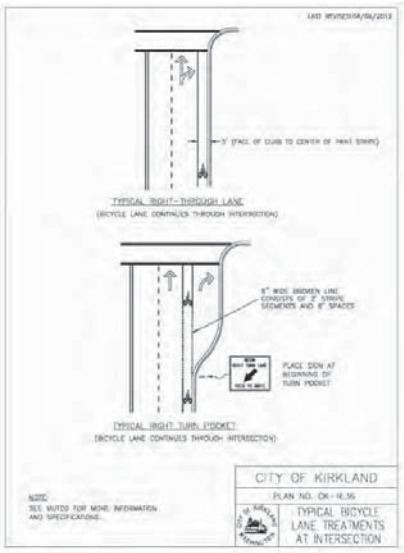

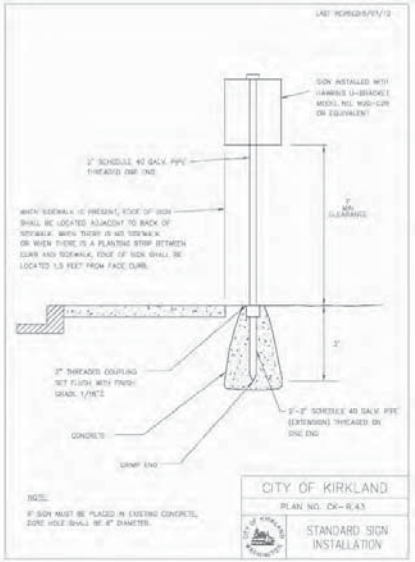

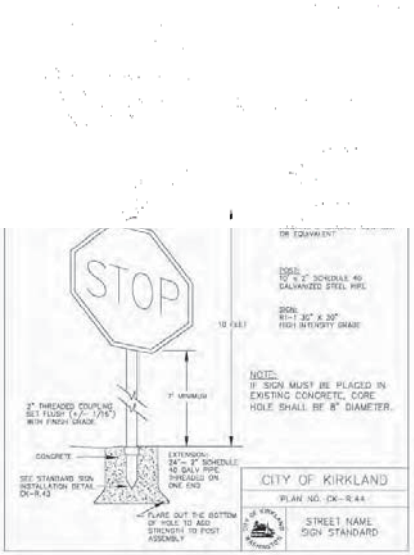

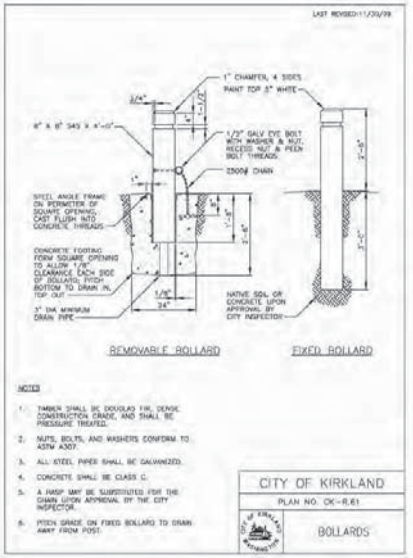

REVISIONS

NO.	DATE	DESCRIPTION	BY
1	5-21-15	REVISED PER CITY COMMENTS DATED 2-17-15	MWM
2	6-10-15	MINOR GRADING REVISIONS	MWM

LDC
THE CIVIL ENGINEERING GROUP
Engineering
Structural
Planning
Survey
14501 NE 20th St. #100
Bellevue, WA 98007
Ph. 425.885.1986
Fx. 425.885.1886
www.LDCcorp.com

PULTE GROUP
MARINWOOD

DT-04 NOTES AND DETAILS

MATTHEW MACKIE
STATE OF WASHINGTON
21609
REGISTERED PROFESSIONAL ENGINEER

JOB NUMBER:	13-176
DRAWING NAME:	13176P-RD-01
DESIGNER:	MWM
DRAFTING BY:	RCR
DATE:	2-06-15
SCALE:	AS NOTED
JURISDICTION:	KIRKLAND

DT-04

SHEET 29 OF 35

Drawing: P:\2013\13-176 Kirkland Moore Layout\Drawings\Preliminary\13176P-RD-07.dwg Plotted: Jun 10, 2015 - 12:57pm

NE 1/4, NW 1/4, SEC 27, TWN 26 N, RGE 5 E, W.M., KING COUNTY, WASHINGTON

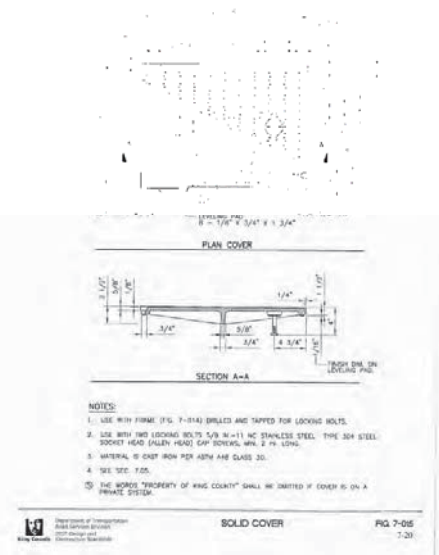

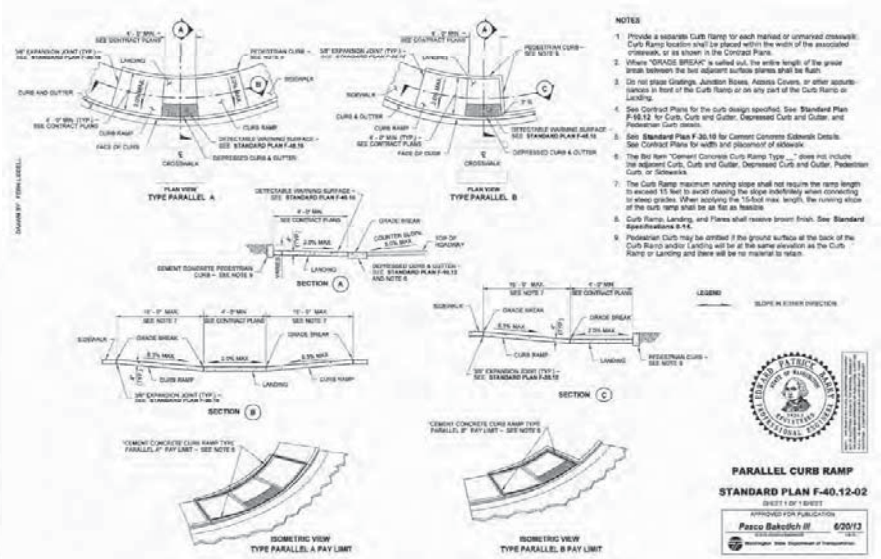

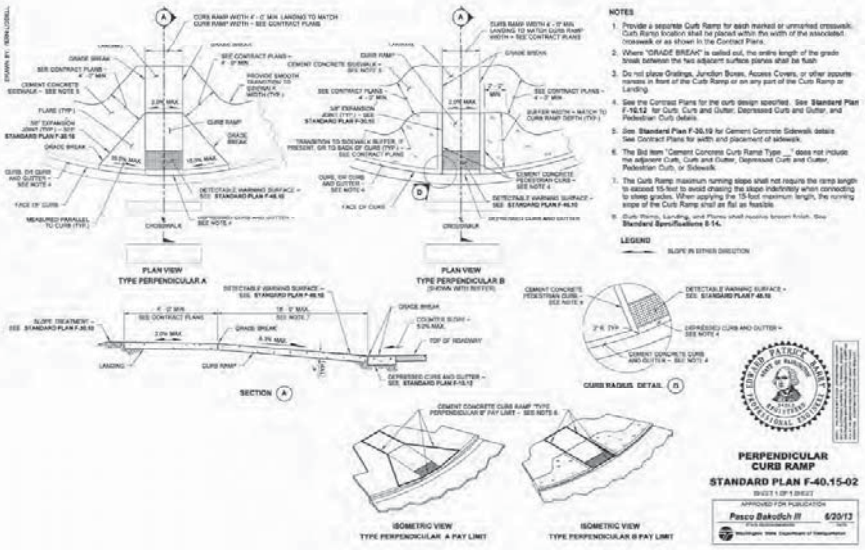

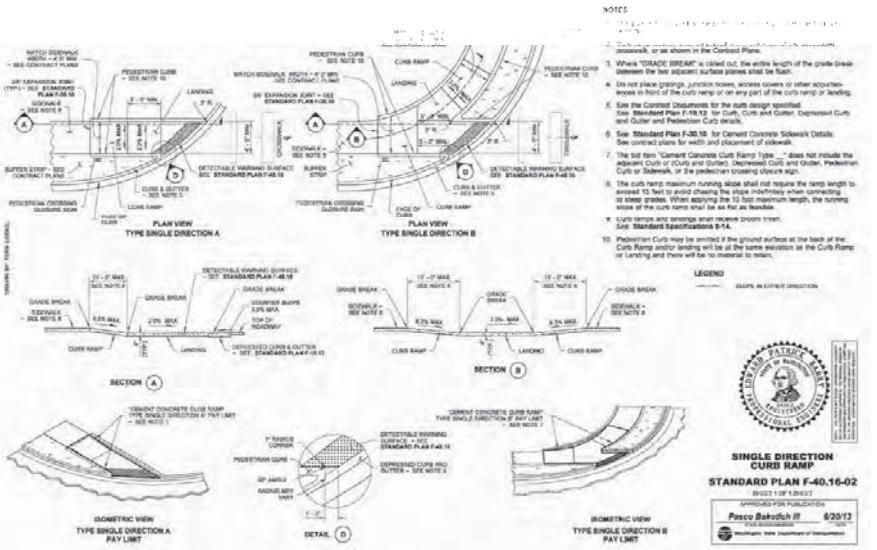

REVISIONS

NO.	DATE	DESCRIPTION	BY
1	5-21-15	REVISED PER CITY COMMENTS DATED 2-17-15	MWM
2	6-10-15	MINOR GRADING REVISIONS	MWM

LDC
THE CIVIL ENGINEERING GROUP
Engineering
Structural
Planning
Survey
14501 NE 20th St. #100
Bellevue, WA 98007
Ph. 425.885.3300
Fx. 425.885.3885
www.LDCcorp.com

PULTE GROUP
MARINWOOD
NOTES AND DETAILS

JOB NUMBER:	13-176
DRAWING NAME:	13176P-RD-01
DESIGNER:	MWM
DRAFTING BY:	RCR
DATE:	2-06-15
SCALE:	AS NOTED
JURISDICTION:	KIRKLAND

DT-05

SHEET 30 OF 35

Drawing: P:\2013\13-176 Kirkland Moore Layout\Drawings\Preliminary\13176P-RD-01.dwg Plotted: Jun 10, 2015 - 12:57pm

NE 1/4, NW 1/4, SEC 27, TWN 26 N, RGE 5 E, W.M., KING COUNTY, WASHINGTON

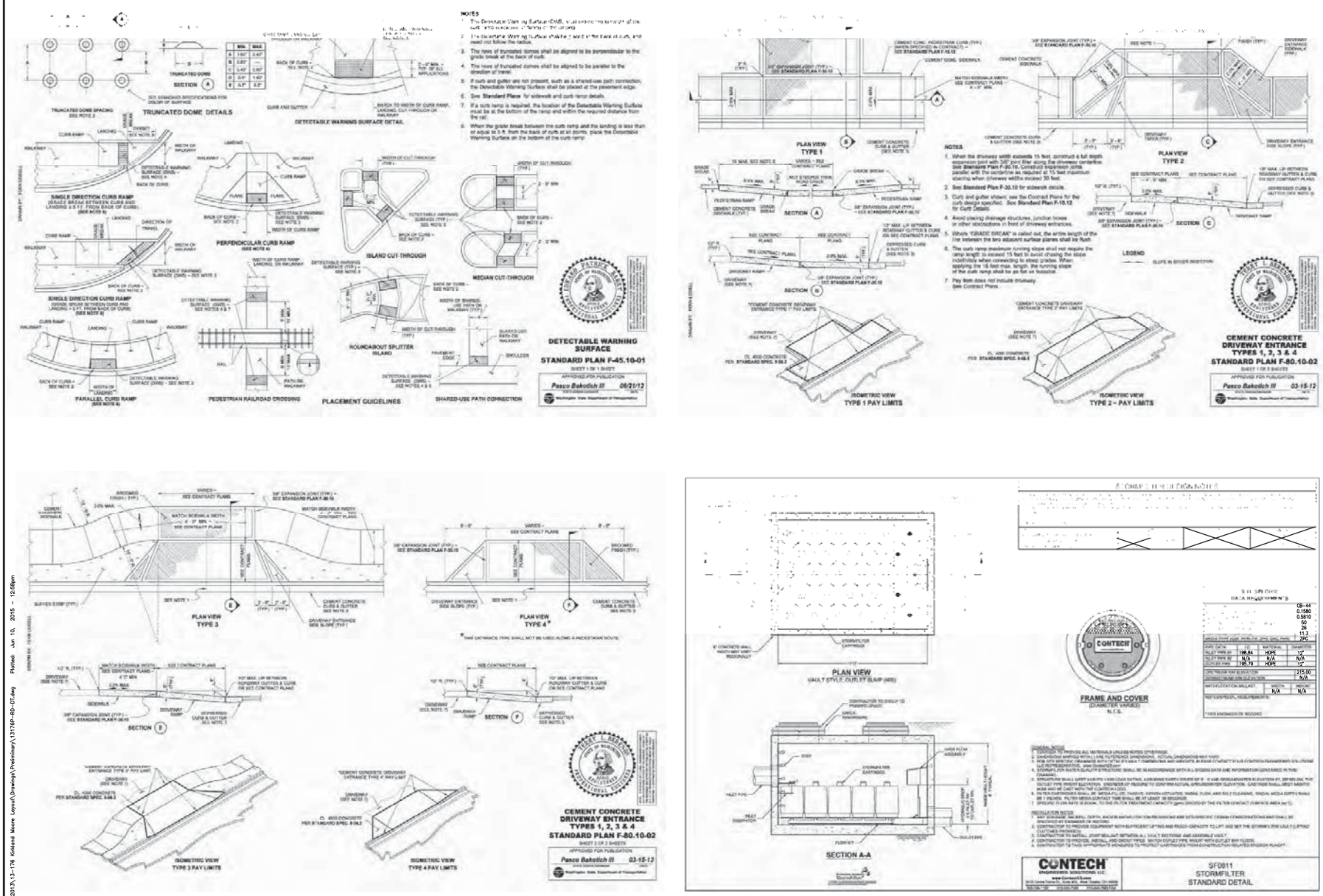

Drawing: P:\2013\13-176 Kirkland Moore Layout\Drawings\Preliminary\13176P-RD-DT.dwg Plotted: Jun 10, 2015 - 12:58pm

REVISIONS

NO.	DATE	DESCRIPTION	BY
1	5-21-15	REVISED PER CITY COMMENTS DATED 2-17-15	MWM
2	6-10-15	MINOR GRADING REVISIONS	MWM

LDC Engineering Structural Planning Survey
THE CIVIL ENGINEERING GROUP
14201 NE 200th St., #100
Woodinville, WA 98072
Ph. 425.806.1000
Fx. 425.482.3893
www.LDCcorp.com

PULTE GROUP
MARINWOOD
NOTES AND DETAILS

MATTHEW MERRITT, STATE OF WASHINGTON, REGISTERED PROFESSIONAL ENGINEER

JOB NUMBER:	13-176
DRAWING NAME:	13176P-RD-DT
DESIGNER:	MWM
DRAFTING BY:	RCR
DATE:	2-06-15
SCALE:	AS NOTED
JURISDICTION:	KIRKLAND

DT-06

SHEET 31 OF 35

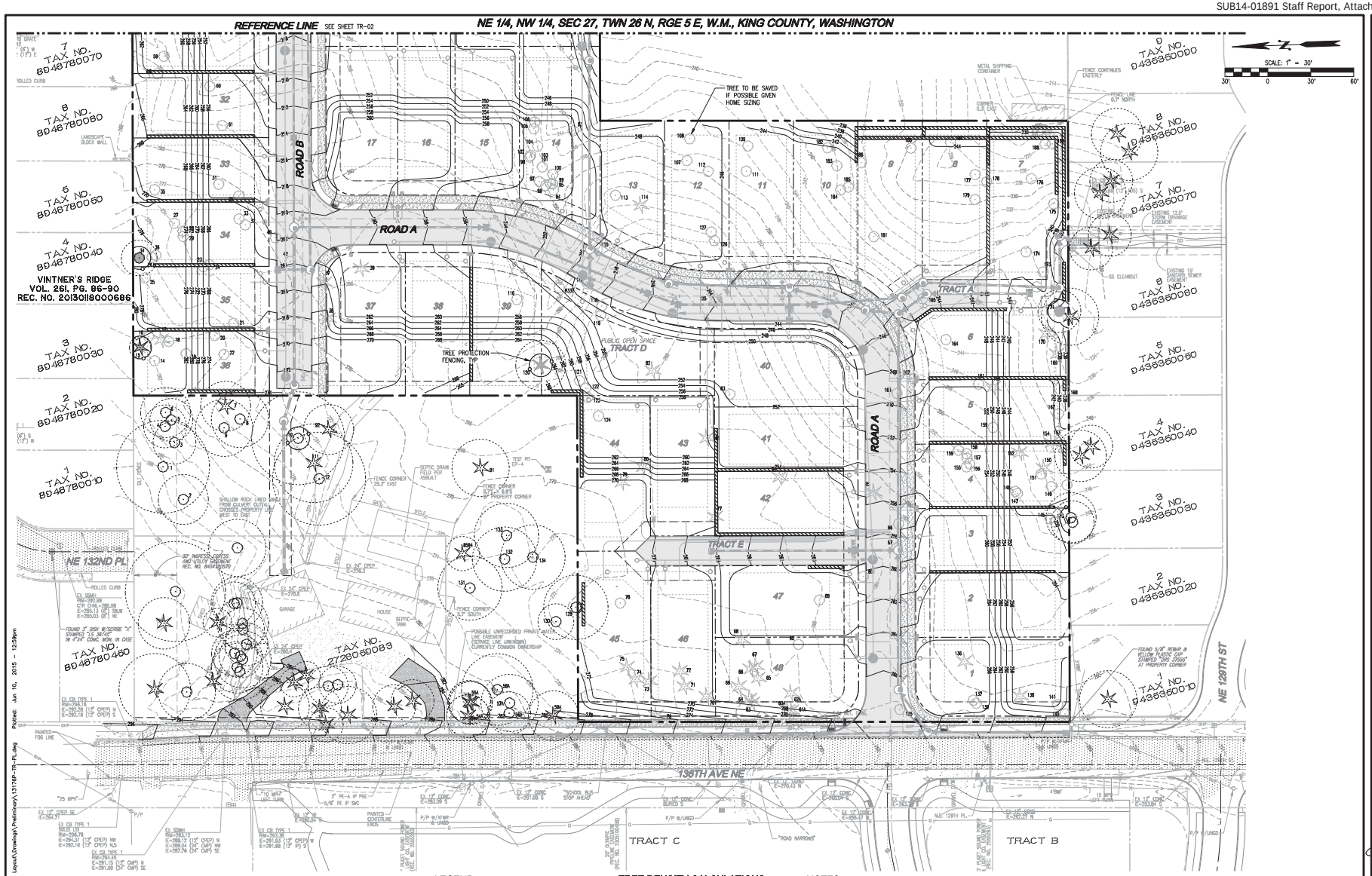

LEGEND

- TREE PROTECTIVE FENCING PER COK STD PLAN CK-R.49
- EXISTING TREE TO BE REMOVED
- EXISTING TREE TO REMAIN
- EXISTING OFFSITE TREE

TREE DENSITY CALCULATIONS

SIGNIFICANT TREES ON SITE=	241
VIABLE SIGNIFICANT TREES ONSITE=	232 - 894 CREDITS
NON-VIABLE SIGNIFICANT TREES ONSITE=	9
TREES TO BE SAVED=	24 - 160 CREDITS
TREE CREDITS REQUIRED=	257
TREE CREDITS TO BE PLANTED=	97

NOTES

1. SEE LANDSCAPE PLANS FOR TREES TO BE PLANTED.
2. SEE SHEET TR-03 AND TR-04 FOR ARBORIST REPORT AND DETAILS.

SURVEY DISCLAIMER

TOPOGRAPHIC SURVEY INFORMATION ON TAX LOTS 2726059032, 2726059038, 2726059083, 2726059029 AND WITHIN 136TH AVE NE AS SHOWN ON THESE PLANS HAS BEEN PROVIDED BY CORE DESIGN, INC. LDC, INC. (LAND DEVELOPMENT CONSULTANTS, INC.), ASSUMES NO LIABILITY AS TO THE ACCURACY AND COMPLETENESS OF THIS DATA. ANY DISCREPANCIES FOUND BETWEEN WHAT IS SHOWN ON THE PLANS AND WHAT IS NOTED IN THE FIELD SHOULD BE BROUGHT IMMEDIATELY TO THE ATTENTION OF THE ENGINEER.

TOPOGRAPHIC SURVEY INFORMATION ON TAX LOTS 2726059073, 2726059066, 2726059028, 2726059034 AND WITHIN NE 131ST WAY AND BURLINGTON NORTHERN RIGHT-OF-WAY AS SHOWN ON THESE PLANS HAS BEEN PERFORMED BY LDC, INC. IN DECEMBER 2014. ANY CHANGES TO THE SITE AFTER THIS DATE WILL NOT BE REFLECTED IN THE PLANS. ANY DISCREPANCIES FOUND BETWEEN WHAT IS SHOWN ON THE PLANS AND WHAT IS NOTED IN THE FIELD SHOULD BE BROUGHT IMMEDIATELY TO THE ATTENTION OF THE ENGINEER.

Call 2 Business Days Before You Dig
811 or 1-800-424-5555
Utilities Underground Location Center

REVISIONS

NO.	DATE	DESCRIPTION	BY
1	5-21-15	REVISED PER CITY COMMENTS DATED 2-17-15	MWM
2	6-10-15	MINOR GRADING REVISIONS	MWM

LDC
THE CIVIL ENGINEERING GROUP
14201 NE 200th St., #100
Woodinville, WA 98072
Ph. 425.806.1600
Fx. 425.482.3699
www.LDCcorp.com

Engineering
Structural
Planning
Survey

PULTE GROUP
MARINWOOD
INTEGRATED DEVELOPMENT PLAN

MATTHEW MERRITT
STATE OF WASHINGTON
40848
REGISTERED PROFESSIONAL ENGINEER
3-6-15

JOB NUMBER:	13-176
DRAWING NAME:	13176P-TR-PL
DESIGNER:	MWM
DRAFTING BY:	RCR
DATE:	2-06-15
SCALE:	1"=30'
JURISDICTION:	KIRKLAND

TR-01

SHEET 32 OF 35

Drawing: P:\2013\13-176 Kirkland Moore Layout\Drawings\Preliminary\13176P-TR-PL.dwg Plotted: Jun 10, 2015 - 12:59pm