SRMKII LLC

CAMPUS BRIDGE

451 7TH AVE S
KIRKLAND, WA

COMBINED CONTRACT

INDEX OF DRAWINGS

APRIL 29, 2014

PRC1

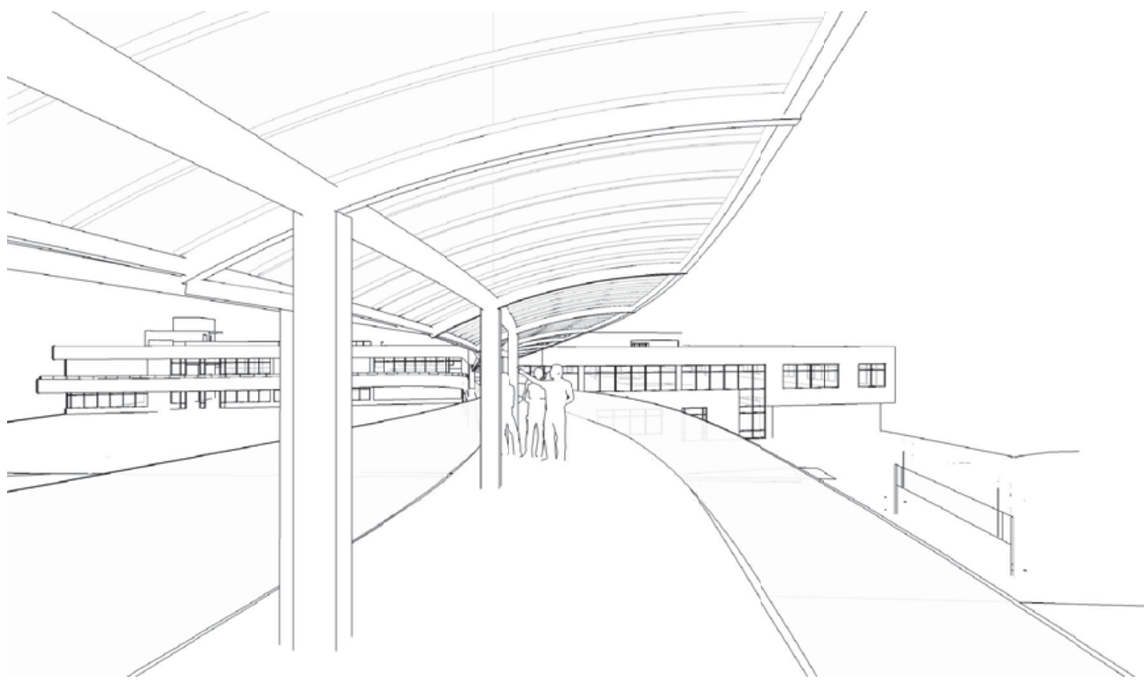

CODE ANALYSIS

APPLICABLE CODES (WITH KIRKLAND AND WA AMENDMENTS)
- 2012 INTERNATIONAL BUILDING CODE (IBC)
- 2012 INTERNATIONAL FIRE CODE (IFC)
- 2003 ICC/ANSI A117.1

RIGHT-OF-WAY CLEARANCE
- 15 FEET MINIMUM CLEARANCE PROVIDED AT ROW PER 3202.3.4

ARCHITECTURAL.

A0.0	COVER SHEET AND INDEX
A0.1	LOCATION PLAN
A1.1	FLOOR PLANS
A1.2	ENLARGED PLANS
A4.1	CANOPY PLANS
A7.1	SECTIONS & DETAILS
A10.1	MISC. DETAILS

PRC1

STRUCTURAL

S1.1	GENERAL NOTES
S1.2	GENERAL NOTES
S2.1	FOUNDATION PLAN
S2.2	BRIDGE FRAMING PLAN
S2.3	BRIDGE ROOF FRAMING PLAN
S3.1	STRUCTURAL DETAILS
S4.1	STRUCTURAL DETAILS
S4.2	STRUCTURAL DETAILS
S5.1	STRUCTURAL DETAILS
S5.2	STRUCTURAL DETAILS

ELECTRICAL

E1.1	LIGHTING PLAN

Notes:

1. Call King County at 206-477-5414 a minimum of 72 hours in advance of construction within 50 feet of the 72-inch or 84-inch King County Wastewater/METRO sewer line. A King County monitor shall be on site at all times while construction is taking place over or within 50 feet of the sewer line.
2. All work over and adjacent to the 72-inch or 84-inch King County Wastewater/METRO sewer line, including excavation and compaction of backfill, shall be performed with methods utilizing equipment whose weight and pressures shall be limited to 3000 pounds and 10 PSI respectively, within a horizontal distance from the springline of the sewer equal to the depth of fill.

PRC1

100% CD SUBMITTAL

COVER SHEET AND INDEX
CAMPUS BRIDGE

A0.0
73-12144.01
04.29.14
PRC1 09.05.14

DLR Group
Architecture Engineering Planning Interiors

©2012, DLR Group Inc., a Washington corporation. ALL RIGHTS RESERVED.

\\SEAD\TAT\Projects\73-12144-01*dwg\A\73-12144-01-A0.0.dwg
Sep 08, 2014 6:50pm - rjacobsen

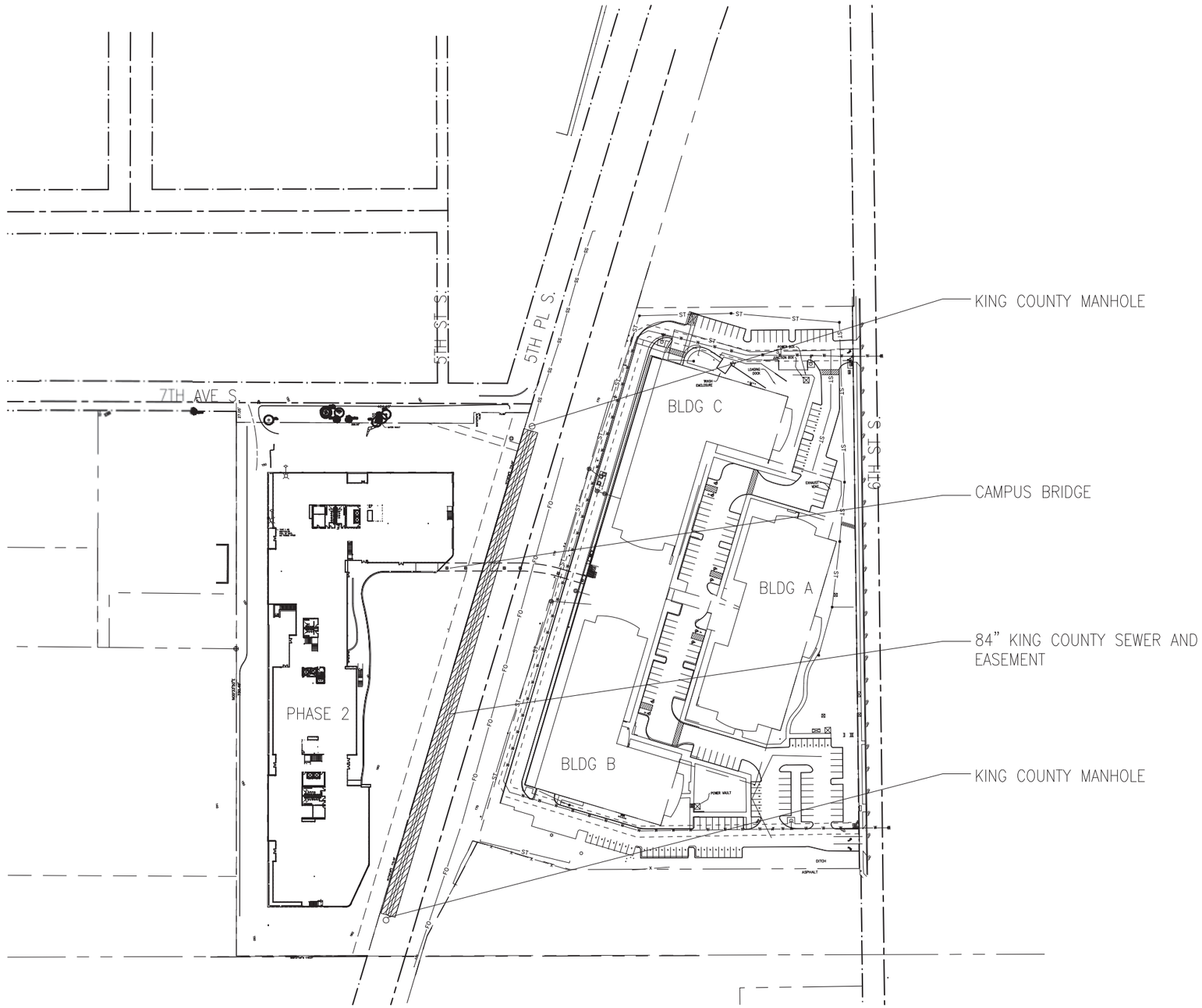

100% CD SUBMITTAL

LOCATION PLAN
CAMPUS BRIDGE

A0.1
7-x-12 (Letter)
04.29.14
PRC1: 09.05.14

DLR Group
Architecture Engineering Planning Interiors

©2012, DLR Group Inc., a Washington corporation, ALL RIGHTS RESERVED.

\\SEA\Work\Projects\173-12144-01\Arch\Bldg\Campus - Bldg 2.dwg
Sep 05, 2014 8:46am

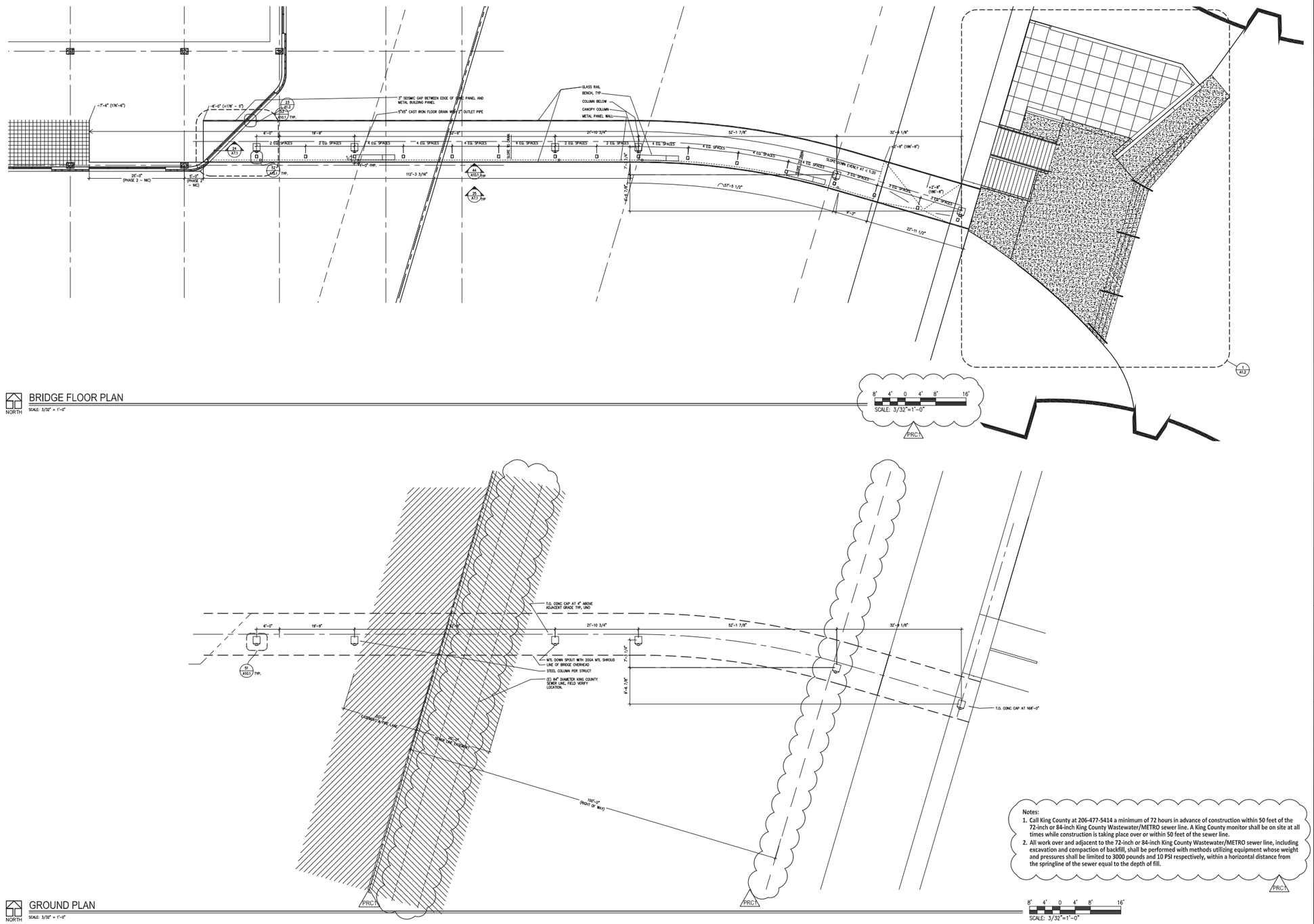

100% CD SUBMITTAL

FLOOR PLANS
CAMPUS BRIDGE

A1.1
7-34-12164-01
04.29.14
PRC1 09.05.14

DLR Group
Architecture Engineering Planning Interiors

©2012, DLR Group Inc., a Washington corporation, ALL RIGHTS RESERVED.

L:\Projects\73-12164-01*dwg\A\a2-a016.dwg
Sep 06, 2014 3:39pm - jspalace

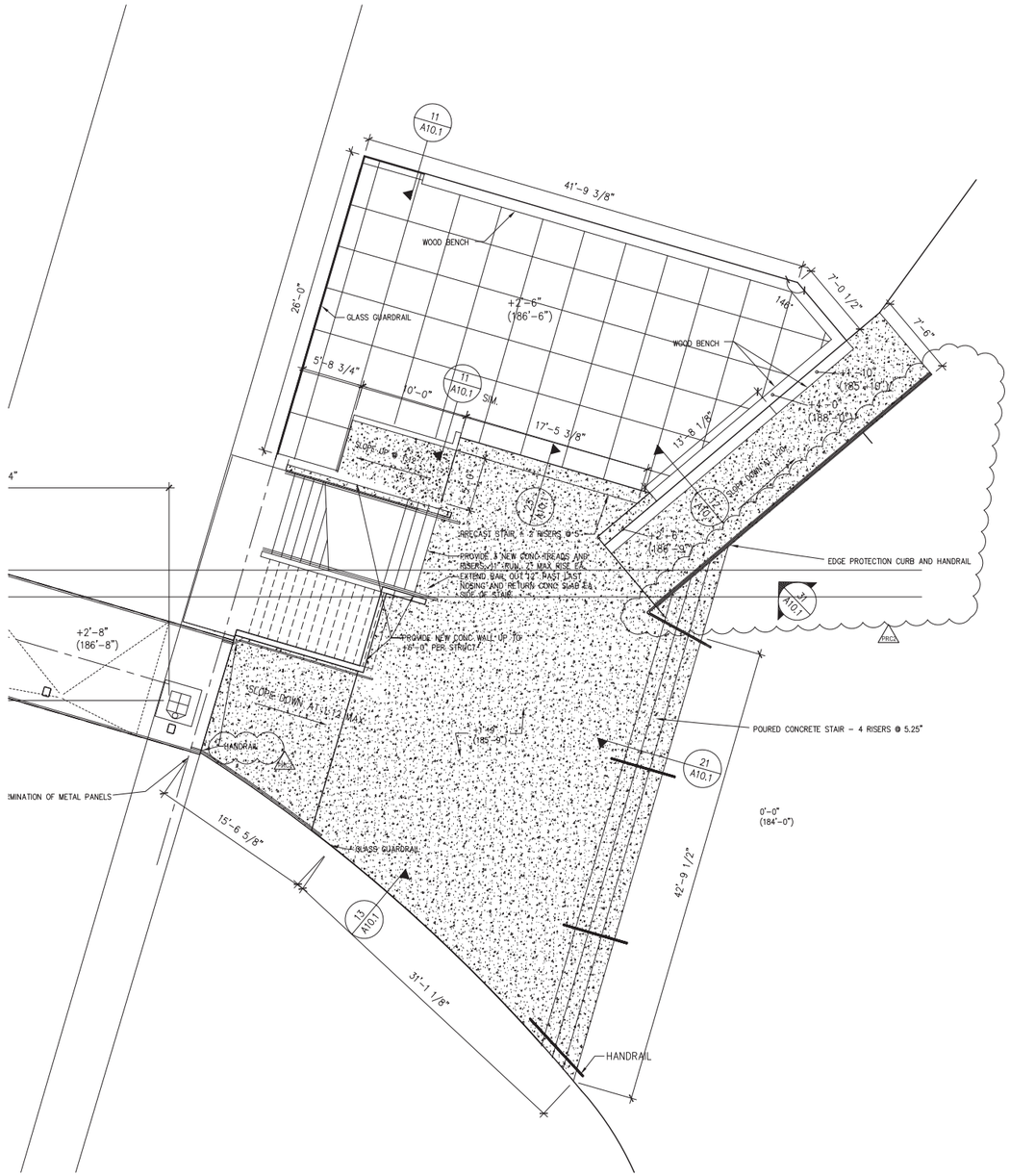

NORTH

ENLARGED PLAZA PLAN

SCALE: 3/16"=1'-0"

8' 4' 0 4' 8' 16'

SCALE: 3/32"=1'-0"

\\SEA01A1\Projects\73-12144-01*dwg\A1-site.dwg
Aug 22, 2014 2:32pm – jpalmer

100% CD SUBMITTAL

PLAZA PLAN
CAMPUS BRIDGE

A1.2
73-12144-01
04.29.14
PRC1 09.05.14

DLR Group
Architecture Engineering Planning Interiors

©2012, DLR Group Inc., a Washington corporation, ALL RIGHTS RESERVED.

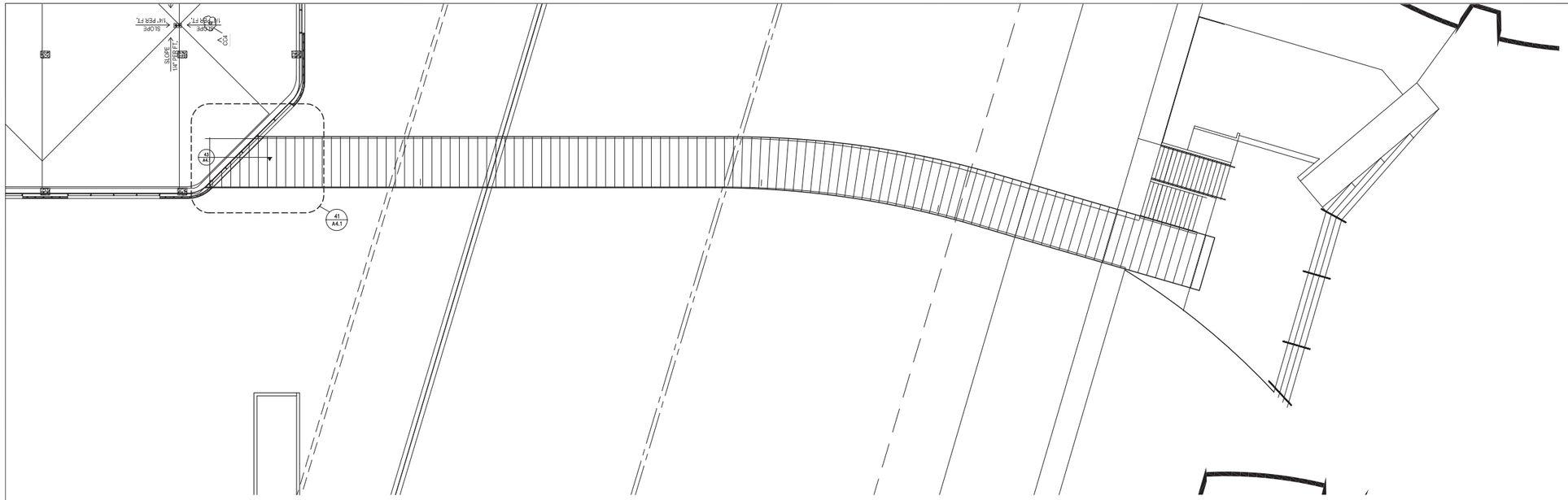

NORTH

BRIDGE ROOF PLAN

SCALE: 3/32"=1'-0"

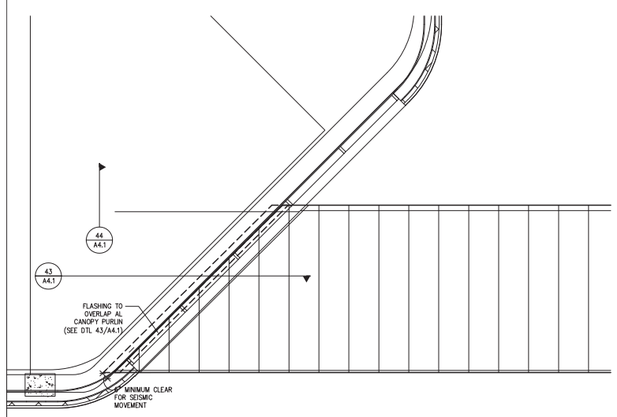

41/A4.1 BRIDGE CANOPY AT PHASE II BUILDING

SCALE: 1/4"=1'-0"

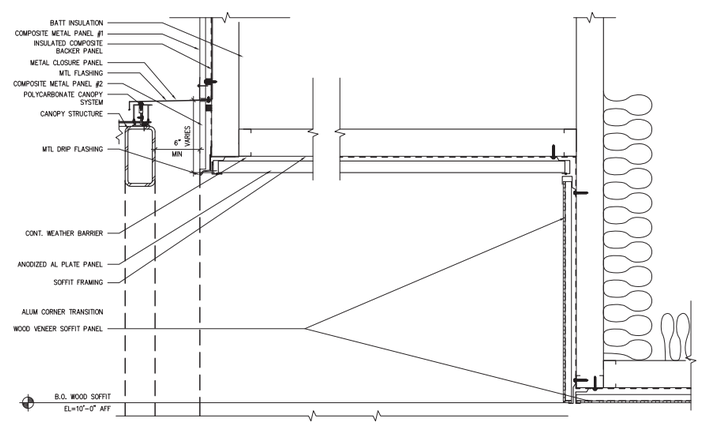

43/A4.1 CANOPY TO PHASE II SOFFIT TRANSITION

SCALE: 1 1/2"=1'-0"

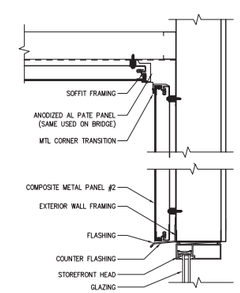

44/A4.1 SOFFIT TRANSITION

SCALE: 1 1/2"=1'-0"

100% CD SUBMITTAL

ROOF PLANS
CAMPUS BRIDGE

A4.1
73-12144-01
04.29.14
PRC1 09.05.14

DLR Group
Architecture Engineering Planning Interiors

©2012, DLR Group Inc., a Washington corporation, ALL RIGHTS RESERVED.

\\SEADATA1\Projects\73-12144-01\"dwg\A\12-a4.1.dwg
Sep 05, 2014 10:01am - rjackson

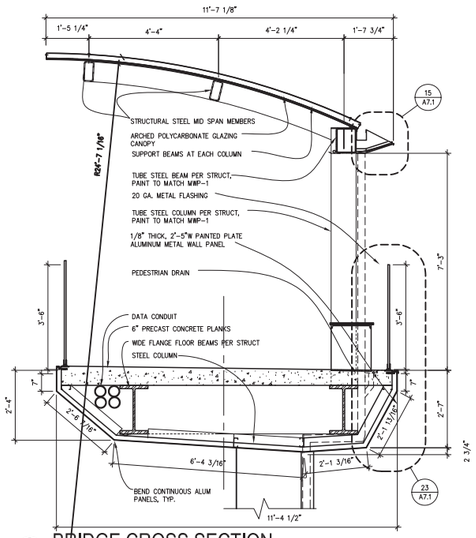

21 A7.1 BRIDGE CROSS SECTION
SCALE: 3/8"=1'-0"

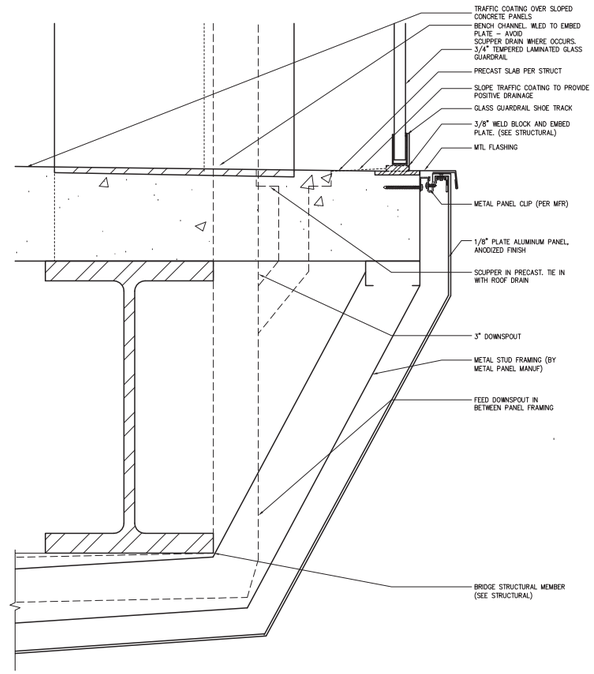

23 A7.1 BRIDGE EDGE DETAIL TYP
SCALE: 3"=1'-0"

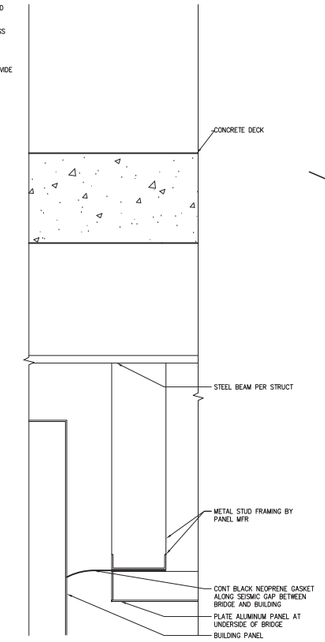

24 A7.1 SEISMIC JOINT SECTION
SCALE: 3"=1'-0"

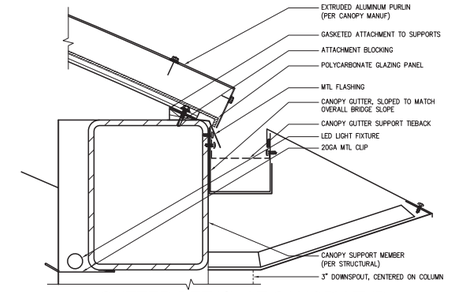

15 A7.1 GUTTER DETAIL AT CANOPY TYP
SCALE: 3"=1'-0"

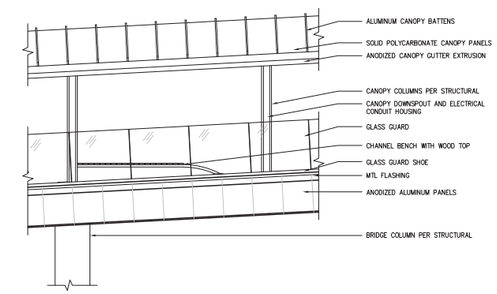

25 A7.1 TYPICAL BRIDGE ELEVATION
SCALE: 1/2"=1'-0"

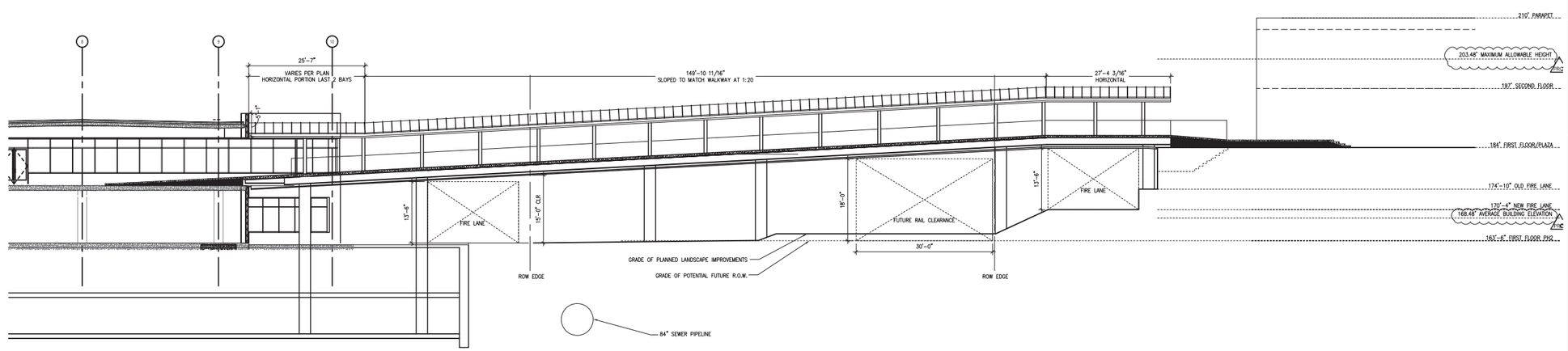

BRIDGE ELEVATION

100% CD SUBMITTAL

SECTIONS
CAMPUS BRIDGE

A7.1
7-34-12 (34-01)
04.29.14
PRC1 09.05.14

DLR Group
Architecture Engineering Planning Interiors

©2012, DLR Group Inc., a Washington corporation, ALL RIGHTS RESERVED.

\\SEA01\Projects\73-12144-01\Mod\A\Sheets\73-12144-01\Sheet - Updated
Sep 29, 2014 1:43:31pm

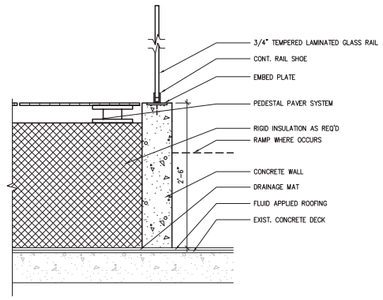

11 / A10.1 PLATFORM EDGE AT UPPER LEVEL
SCALE: 1"=1'-0"

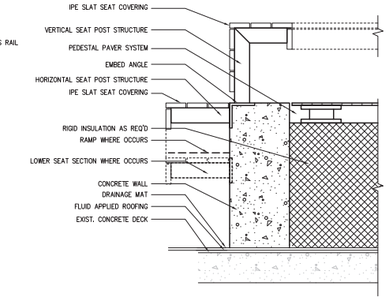

12 / A10.1 SEATING AT RAISED PLATFORM
SCALE: 1"=1'-0"

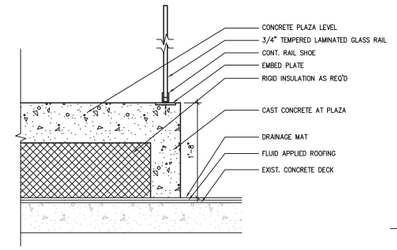

13 / A10.1 RAISED PLAZA PLATFORM EDGE
SCALE: 1"=1'-0"

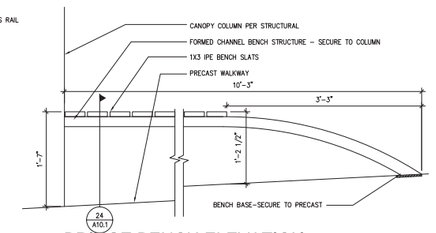

14 / A10.1 BRIDGE BENCH ELEVATION
SCALE: 1"=1'-0"

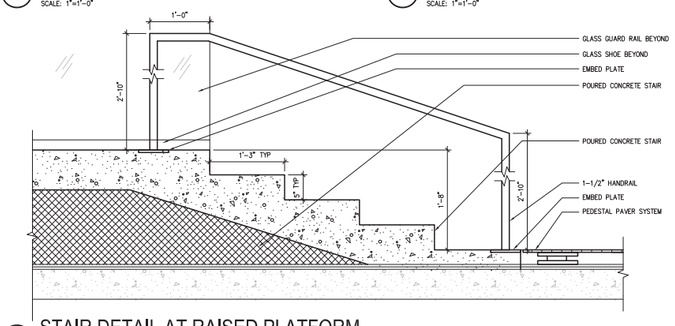

21 / A10.1 STAIR DETAIL AT RAISED PLATFORM
SCALE: 1"=1'-0"

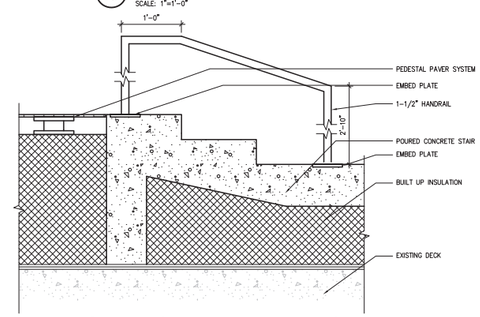

23 / A10.1 STAIR DETAIL AT UPPER PLATFORM
SCALE: 1"=1'-0"

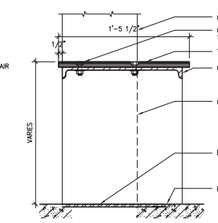

24 / A10.1 BENCH SECTION
SCALE: 1 1/2"=1'-0"

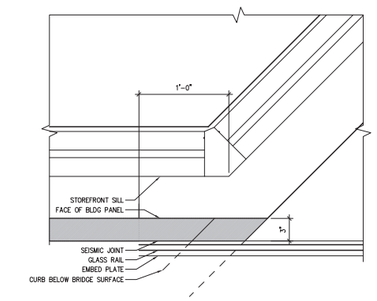

25 / A10.1 SEISMIC JOINT AT BLDG CORNER
SCALE: 1 1/2"=1'-0"

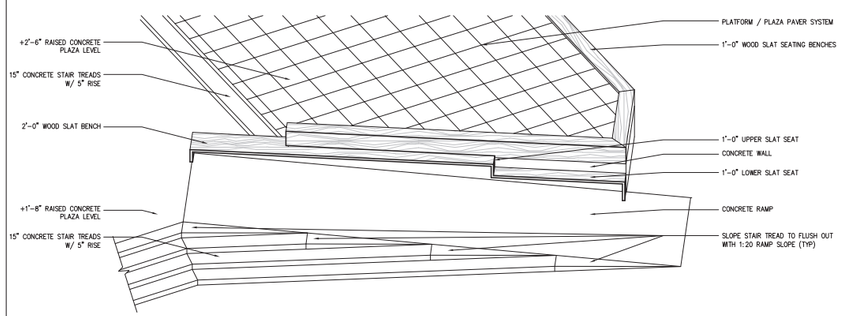

31 / A10.1 PLAZA RAMP AXON
SCALE: 1/4"=1'-0"

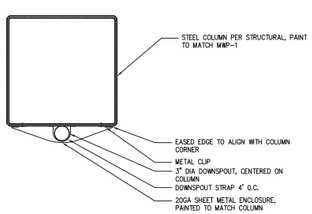

51 / A7.1 GUTTER SHROUD DETAIL AT GROUND
SCALE: 1"=1'-0"

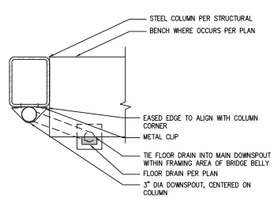

52 / A7.1 GUTTER SHROUD DETAIL AT CANOPY
SCALE: 1"=1'-0"

100% CD SUBMITTAL

PLAZA DETAILS
CAMPUS BRIDGE

A10.1
73-12144-01
04-29-14
PROJ ID: 08.05.14

DLR Group
Architecture Engineering Planning Interiors

©2012, DLR Group Inc., a Washington corporation, ALL RIGHTS RESERVED.

\\SEA2-FS1\Projects\73-12144-01*dwg\A-series\A-series.dwg
Sep 02, 2014 12:06am - jylander

ATTACHMENT 9
FILE NO. SEP14-01380
BRIDGE PERMIT BNR14-03425

STRUCTURAL - GENERAL NOTES

GENERAL REQUIREMENTS

GOVERNING CODE: The design and construction of this project is governed by the **"International Building Code (IBC)", 2012 Edition**, hereafter referred to as the IBC, as adopted and modified by the City of Kirkland Washington, understood to be the Authority Having Jurisdiction (AHJ).

REFERENCE STANDARDS: Refer to Chapter 35 of 2012 IBC. Where other Standards are noted in the drawings, use the latest edition of the standard unless a specific date is indicated. Reference to a specific section in a code does not relieve the contractor from compliance with the entire standard.

DEFINITIONS: The following definitions cover the meanings of certain terms used in these notes:

"**Architect/Engineer**" – The Architect of Record and the Structural Engineer of Record.

- "**Structural Engineer of Record" (SER)** – The structural engineer who is licensed to stamp & sign the structural documents for the project. The SER is responsible for the design of the Primary Structural System.
- "**Submit for review**" - Submit to the Architect/Engineer for review prior to fabrication or construction.
- "**Per Plan**" – Indicates references to the structural plans, elevations and structural general notes.
- **"Specialty Structural Engineer" (SSE) –** A professional engineer (PE or SE), licensed in the State where the project is located, (typically not the SER), who performs specialty structural engineering services for selected specialty-engineered elements identified in the Contract Documents, and who has experience and training in the Specialty. Documents stamped and signed by the SSE shall be completed by or under the direct supervision of the SSE.
- **"Bidder-designed" –** Components of the structure that require the general contractor, subcontractor, or supplier who is responsible for the design, fabrication and installation of specialty-engineered elements identified in the Contract Documents to retain the services of an SSE. Submittals of "Bidder-designed" elements shall be stamped and signed by the SSE.

SPECIFICATIONS: Refer to the project specifications issued as part of the contract documents for information supplemental to these drawings.

OTHER DRAWINGS: Refer to the architectural, mechanical, electrical, civil and plumbing drawings for additional information including but not limited to: dimensions, elevations, slopes, door and window openings, non-bearing walls, stairs, finishes, drains, waterproofing, railings, and other nonstructural items.

STRUCTURAL DETAILS: The structural drawings are intended to show the general character and extent of the project and are not intended to show all details of the work. Use entire detail sheets and specific details referenced in the plans as "typical" wherever they apply. Similarly, use details on entire sheets with "typical" in the name wherever they apply.

STRUCTURAL RESPONSIBILITIES: The structural engineer (SER) is responsible for the strength and stability of the primary structure in its completed form.

COORDINATION: The Contractor is responsible for coordinating details and accuracy of the work; for confirming and correlating all quantities and dimensions; for selecting fabrication processes; for techniques of assembly; and for performing work in a safe and secure manner.

MEANS, METHODS and SAFETY REQUIREMENTS: The contractor is responsible for the means and methods of construction and all job related safety standards such as OSHA and DOSH (Department of Occupational Safety and Health). Contractor is responsible to adhere to OSHA regulations regarding steel erection items specifically addressed in the latest OSHA regulations. Bolting and field welding at all member connections is to be completed prior to the release of the member from the hoisting mechanism unless reviewed and approved by the General Contractor's temporary bracing and shoring design engineer.

BRACING/SHORING DESIGN ENGINEER: The contractor shall at his discretion employ an SSE, a registered professional engineer for the design of any temporary bracing and shoring.

TEMPORARY SHORING, BRACING: The contractor is responsible for the strength and stability of the structure during construction and shall provide temporary shoring, bracing and other elements required to maintain stability until the structure is complete. It is the contractor's responsibility to be familiar with the work required in the construction documents and the requirements for executing it properly.

CONSTRUCTION LOADS: Loads on the structure during construction shall not exceed the design loads as noted in DESIGN CRITERIA & LOADS below or the capacity of partially completed construction as determined by the Contractor's SSE for Bracing/Shoring.

NOTE PRIORITIES: Plan and detail notes and specific loading data provided on individual plans and detail drawings supplements information in the Structural General Notes.

DISCREPANCIES: In case of discrepancies between the General Notes, Specifications, Plans/Details or Reference Standards, the Architect/Engineer shall determine which shall govern. Discrepancies shall be brought to the attention of the Architect/Engineer before proceeding with the work. Should any discrepancy be found in the Contract Documents, the Contractor will be deemed to have included in the price the most expensive way of completing the work, unless prior to the submission of the price, the Contractor asks for a decision from the Architect as to which shall govern. Accordingly, any conflict in or between the Contract Documents shall not be a basis for adjustment in the Contract Price.

SITE VERIFICATION: The contractor shall verify all dimensions and conditions at the site. Conflicts between the drawings and actual site conditions shall be brought to the attention of the Architect/Engineer before proceeding with the work.

ADJACENT UTILITIES: The contractor shall determine the location of all adjacent underground utilities prior to earthwork, foundations, and excavation. Any utility information shown on the drawings and details is approximate and not necessarily complete.

ALTERNATES: Alternate products of similar strength, nature and form for specified items may be submitted with adequate technical documentation (proper test report, etc.) to the Architect/Engineer for review. Alternate materias that are submitted without adequate technical documentation or that significantly deviate from the design intent of materials specified may be returned without review. Alternates that require substantial effort to review will not be reviewed unless authorized by the Owner.

DESIGN CRITERIA AND LOADS

OCCUPANCY:	Risk Category of Building per 2012 IBC Table 1604.5 =	II

WIND DESIGN:	**MAIN WIND FORCE RESISTING SYSTEM**	
	Ultimate Design Wind Speed, V_{ULT} (MPH)	110
	Exposure Category	C
	Topographic Factor Kzt =	1.0
	COMPONENT & CLADDING PRESSURES for DESIGN	**PSF**
	Wall Cladding, Typical Zone	30
	Wall Cladding, Edge Zone within feet of corners	35
	Roof Cladding, Middle Zone	20
	Roof Cladding, Edge Zone within 6 feet of edge	50
	Roof Cladding, Corner Zone within 6 feet of corners	95
	Uplift Load Net	30

SEISMIC DESIGN	**Seismic Design Category: SDC =**	D
	Basic Structural System	**Non Building Structure**
	Seismic Force Resisting System	**Inverted Pendulum**
	Response Modification Factor: R =	2
	System Over strength Factor Omega =	2
	Deflection Amplification Factor Cd =	2
	Site Classification per IBC 1613.3.2 & ASCE 7-10, Ch. 20 **Site Class =**	D
	Seismic Importance Factor per ASCE 7-10 Table 1.5-2 Ie =	1.0
	Spectral Response Acceleration (Short Period) S_s =	1.247
	Spectral Response Acceleration (1-Second Period) S_1 =	0.424
	Spectral Design Response Coefficient (Short Period) S_{DS} =	0.831 g
	Spectral Design Response Coefficient (1-Second Period) S_{D1} =	0.389 g
	Seismic response coefficient(s) Cs =	0.416
	Redundancy Factor (North/South Direction) N/S rho=	1.0
	Redundancy Factor (East /West Direction) E/W rho=	1.0
	Design Base Shear (North/South Direction) (KIPS)	151
	Design Base Shear (East /West Direction) (KIPS)	151
	Base shear governed by:	seismic
	Seismic Analysis procedure used:	Equivalent Lateral Force (ELF)

SNOW LOAD: (1)	Flat Roof Snow Load, (PSF) p_f =	25 (2)
	Snow Load Importance Factor I_s =	1.0 (3)

1) Snow Load is un-reducible and includes 5 psf rain-on-snow surcharge where ground snow load is greater than zero and 20 psf or less per ASCE 7-10 Section 7.10.
2) Snow Load based on WABO/SEAW White Paper in Low-Lying Puget Sound Basin.
3) Snow Load Importance Factor per ASCE 7-10 Table 1.5-2.

DESIGN LIVE LOADS	AREA	LIVE LOADS (PSF) UNO	REMARKS & FOOTNOTES
	Handrails & Pedestrian Guardrails	50 PLF or 200 LB	(1)
	Pedestrian Bridge and Plaza Areas	100	

(1) Top rail shall be designed to resist 50 PLF line load or 200 lb point load applied in any direction at any point. Intermediate rails (all those except the handrail), balusters and panel fillers shall be designed to withstand a horizontally applied normal load of 50 LB on an area not to exceed 1 ft square. These three loads are to be considered separately with worst case used for design.

SUBMITTALS

SUBMIT FOR REVIEW: SUBMITTALS of shop drawings, product data and mill tests are required for items noted in the individual materials sections and for *bidder designed* elements.

SUBMITTAL REVIEW PERIOD: Submittals shall be made in time to provide a minimum of TWO WEEKS or 10 WORKING DAYS for review by the Architect/Engineer prior to the onset of fabrication.

GENERAL CONTRACTOR'S PRIOR REVIEW: Prior to submission to the Architect/Engineer, the Contractor shall review the submittal for completeness. Dimensions and quantities are not reviewed by the SER, and therefore, must be verified by the General Contractor. Contractor shall provide any necessary dimensional details requested by the Detailer and provide the Contractor's review stamp and signature before forwarding to the Architect/Engineer.

SHOP DRAWING REVIEW: Once the contractor has completed his review, the SER will review the submittal for general conformance with the design concept and the contract documents of the building and will stamp the submittal accordingly. Markings or comments shall not be construed as relieving the contractor from compliance with the project plans and specifications, nor departures there from. The SER will return submittals in the form they are submitted in (either hard copy or electronic). For hard copy submittals, the contractor is responsible for submitting the required number of copies to the SER for review.

SHOP DRAWING DEVIATIONS: When shop drawings (component design drawings) differ from or add to the requirements of the structural drawings they shall be designed and stamped by the responsible SSE.

DEFERRED SUBMITTALS

BIDDER-DESIGNED ELEMENTS
Submit "Bidder-Designed" deferred submittals to the Architect and SER for review. The deferred submittals shall also be submitted to the city for approval, if required by the city.

Design of prefabricated, "bidder designed", manufactured, pre-engineered, or other fabricated products shall be comply with the following requirements:

1) Design considers tributary dead, live, wind and earthquake loads in combinations required by IBC.
2) Design within the Deflection Limits noted herein and as specified or referenced in the IBC.
3) Design shall conform to the specifications and reference standards of the governing code.
4) Submittal shall include:
   a. Calculations prepared, stamped and signed by the SSE demonstrating code conformance.
   b. Engineered component design drawings are prepared, stamped and signed by the SSE.
   c. Product data, technical information and manufacturer's written requirements and Agency approvals as applicable.
   d. SSE may submit to the Architect/Engineer, a request to utilize relevant alternate design criteria of similar nature and generally equivalency which is recognized by the Code and acceptable to the Authority Having Jurisdiction. Submit adequate documentation of design.

GENERAL CONTRACTOR'S PRIOR REVIEW: Once the contractor has completed his review of the SSE component drawings, the SER will review the submittal for general conformance with the design of the building and will stamp the submittal accordingly. Review of the Specialty Structural Engineer's (SSE) shop drawings (component design drawings) is for compliance with design criteria and compatibility with the design of the primary structure and does not relieve the SSE of responsibility for that design. All necessary bracing, ties, anchorage, proprietary products shall be furnished and installed per manufacturer's instructions or the SSE's design drawings and calculations. These elements include but are not limited to:

- Handrails, Guardrails and Balcony Rail Anchorages
- Precast Structural Elements

INSPECTIONS, QUALITY ASSURANCE VERIFICATIONS AND TEST REQUIREMENTS

INSPECTIONS: Foundations, footings, under slab systems and framing are subject to inspection by the Building Official in accordance with IBC 110.3. Contractor shall coordinate all required inspections with the Building Official.

SPECIAL INSPECTIONS, VERIFICATIONS and TESTS: Special Inspections, Verifications and Testing shall be done in accordance with IBC Chapter 17 and the STATEMENT OF SPECIAL INSPECTIONS herein per IBC Sections 1704 and 1705, as applicable.

SPECIAL INSPECTION AGENCY and SPECIAL INSPECTORS: Owner shall retain a WABO accredited Special Inspections agency to provide Special Inspections for the project. Special Inspectors shall be qualified persons per IBC 1704.2.1.

STATEMENT OF SPECIAL INSPECTIONS: Special Inspections and Testing per IBC Sections 1704 and 1705 are required for the following:

FABRICATION SHOP INSPECTION: Where off-site Fabrication of gravity LOAD BEARING MEMBERS & ASSEMBLIES is performed, Special Inspector shall verify that the fabricator complies with IBC 1704.2.5 which includes the following:

- **Prior to the start of fabrication**, Special Inspector(s), representing the Owner, shall visit the Fabricator's shop(s) where the work is to be performed, and verifies that the Fabricator maintains detailed Fabrication and Quality Control procedures that provide a basis for inspection, control of workmanship, material control and fabricator's ability to conform to approved Construction Documents and referenced Standards.
- **Fabricator shall have available** for Inspector's review, detailed procedures for material control that demonstrates the fabricator's ability to maintain suitable records and procedures such that, at anytime during the fabrication process, the material specification, grade and applicable test reports for primary load-carrying members, are capable of being determined.

SOILS & FOUNDATION CONSTRUCTION per IBC Section 1705.6

- **Periodic** inspection of soils earthwork per Table 1705.6 is required for:
  - Footing soil bearing surfaces prior to placing any reinforcing steel
  - Excavation depth and bearing layer prior to placing any reinforcing steel.
- **Continuous** inspection per Table(s) 1705.6 required for:
  - Installation of Cast-in-Place Deep Foundations – **Drilled Cast-in-place Piers/Caisson** per IBC Section & Table 1705.8 and IBC Section 18.10.4.8 & IBC 1705.3 for concrete testing.

CONCRETE CONSTRUCTION per IBC Section 1705.3 and Table 1705.3 including:

- **Periodic** inspection required for:
  - Size & placement of all reinforcing steel prior to the pour
  - Placement clearances around reinforcing steel at embedded conduit.
  - Placing & size of cast-in-place bolts and embedded fabrications prior to the pour.
  - Shape, location & dimensions of members formed.
  - Use of the required design concrete mix.
  - Maintenance of specified curing temperature and techniques.
- **Continuous** inspection required during the:
  - Placing of reinforced concrete, for proper application techniques.
  - Placing of concrete around cast-in-place bolts and embeds.
  - Sampling of fresh concrete.
  - Determ nations of slump, air content and temperature.
  - Grouting operation of post-installed bolts or rebar dowels.

STRUCTURAL STEEL per IBC 1704.2.5.1

A qualified Special Inspector of an "approved agency" providing Quality Assurance (QA) Special Inspections for the project shall review and confirm the Fabricator and Erector's Quality Control (QC) procedures for completeness and adequacy relative to AISC 360-10 Chapter N, the AISC 303 Code of Standard Practice, AWS D1.1-2010 Structural Welding Code, and 2012 IBC code requirements for the fabricator's scope of work.

- QA Agency providing Special Inspections shall provide personnel meeting the minimum qualification requirements for Inspection and Nondestructive Testing NDT per AISC 360-10 Section N4.
- Verify Fabricator and Erector Quality Control Program per AISC 360-10 Section N2.
- Visual Welding Inspection of welds by both QC and QA personnel shall be per tables listed in AISC 360 Section N5.
- Inspection Tasks for Welding
  - Prior to Welding per AISC 360-10 Table N5.4-1.
  - During Welding per AISC 360-10 Table N5.4-2.
  - After Welding per AISC 360-10 Table N5.4-3.
- Nondestructive Testing (NDT) of welds:
  - Non-Destructive Testing (NDT) of welded joints per AISC 360-10 N.5.
  - Risk Category for determination of extent of NDT per AISC 360 N5.5b is noted in the Design Criteria and Loads section of these General Requirements.
  - NDT performed shall be documented and reports shall identify the tested weld by piece mark and location in the piece.
  - For field work, the NDT report shall identify the tested weld by location in the structure, piece mark and location in the piece.
- Inspection Tasks for Bolting per AISC 360-10 Section N5.6
  - Prior to Bolting per AISC 360-10 Table N5.6-1. Not required for snug-tight joints.
  - During Bolting per AISC 360-10 Table N5.6-2. Not required for snug-tight joints.
  - After Bolting per AISC 360-10 Table N5.6-3.
- Additional Inspection tasks per AISC 360-10 Section N5.7.
- Inspection for Composite Construction shall be done per AISC 360-10 Section N6.

POST-INSTALLED ANCHORS TO CONCRETE: shall comply with IBC Section 1703. Inspections shall be in accordance with the requirements set forth in the approved ICC Evaluation Report and as indicated by the design requirements specified on the drawings. Refer to the POST INSTALLED ANCHORS section of these notes for anchors that are the basis of the design. Special inspector shall verify anchors are as specified in the POST INSTALLED ANCHORS section of these notes or as otherwise specified on the drawings. Substitutions require approval by the SER and require substantiating calculations and current 2012 IBC recognized ICC Evaluation Services (ES) Report. Special Inspector shall document in their Special Inspection Report compliance with each of the elements required within the applicable ICC Evaluation Services (ES) Report.

INSPECTION SUBMITTALS: Special inspection reports shall be provided on a weekly basis. Final special inspection reports will be required by each special inspection firm per IBC 1704.2.4. Submit copies of all inspection reports to the Architect/Engineer and the Authority Having Jurisdiction for review.

STRUCTURAL OBSERVATION: Structural Observation shall be provided for structures classified as Seismic Design Category D, E and F in accordance with IBC Section 1704.5 and Section 107.3.4. Structural observation site visits will be as follows: After installation but prior to casting in the anchor bolts for the bridge columns and during steel erection. Contractor shall notify the SER in a timely manner to allow scheduled Observations to occur. Field (Observation) Reports will be distributed to the Architect, the Contractor, Special Inspector and the Authority Having Jurisdiction.

CONTRACTOR RESPONSIBILITY: Prior to issuance of the building permit, the Contractor is required to provide the Authority Having Jurisdiction a signed, written acknowledgement of the Contractor's responsibilities associated with the above Statement of Special Inspections addressing the requirements listed in IBC Section 1704.4. Contractor is referred to IBC Sections 1705.11.5 and 1705.11.6 for architectural and MEP building systems that may be subject to additional inspections (based on the building's designated Seismic Design Category listed in the CRITERIA), including anchorage of HVAC ductwork containing hazardous materials, piping systems and mechanical units containing flammable, combustible or highly toxic materials, electrical equipment used for emergency or standby power, exterior wall panels and suspended ceiling systems.

PREFABRICATED CONSTRUCTION: All prefabricated construction shall conform to IBC Section 1703.

SOILS AND FOUNDATIONS

REFERENCE STANDARDS: Conform to IBC Chapter 18 "Soils and Foundations."

GEOTECHNICAL REPORT: Recommendations contained in Geotechnical Engineering Report: Improvements in the Cross Kirkland Corridor Google Campus Expansion by Terracon Consultants Inc. dated March 19, 2014 were used for design.

DCI ENGINEERS
601 W. RIVERSIDE • SUITE 600
SPOKANE, WASHINGTON 99201
PHONE: (509) 455-4448 • FAX: (509) 455-7492
WEBSITE: www.dci-engineers.com
CIVIL / STRUCTURAL

DRAWING LEGEND

MARK	DESCRIPTION	MARK	DESCRIPTION
F2.0	FOOTING SYMBOL (REFER TO SPREAD FOOTING SCHEDULE)		INDICATES WIDE FLANGE COLUMN
P1	PILE CAP SYMBOL (REFER TO PILE CAP SCHEDULE)		INDICATES HOLLOW STRUCTURAL SECTION (HSS) COLUMN OR TUBE STEEL (TS) COLUMN
A	TILT-UP/PRECAST CONCRETE WALL CONNECTION SYMBOL (REFER TO CONNECTION DETAIL)		INDICATES HOLLOW STRUCTURAL SECTION (HSS) COLUMN OR STEEL PIPE COLUMN
W6	SHEAR WALL SYMBOL (REFER TO SHEAR WALL SCHEDULE)		INDICATES WOOD POST
1	REVISION TRIANGLE		INDICATES BUNDLED STUDS
1	TILT-UP/PRECAST CONCRETE WALL PANEL NUMBER (REFER TO TILT-UP/PRECAST CONCRETE WALL ELEVATIONS)		INDICATES CONCRETE COLUMN
1	CMU WALL REINFORCING SYMBOL (REFER TO CMU WALL REINFORCING SCHEDULE)		INDICATES PRECAST CONCRETE COLUMN
8"	CONTINUITY PLATE LENGTH (REFER TO TYPICAL DETAIL)		INDICATES MOMENT FRAME CONNECTION
DS	INDICATES DOUBLE SHEAR CONNECTION (REFER TO THE DOUBLE SHEAR PLATE CONNECTIONS DETAIL)		INDICATES DRAG CONNECTION
SR	INDICATES NUMBER OF STUD RAIL REQUIRED AT COLUMN (REFER TO STUD RAIL DETAILS)		INDICATES WOOD OR STEEL STUD WALL
1	ROOF/FLOOR DIAPHRAGM NAILING SYMBOL (REFER TO DIAPHRAGM NAILING SCHEDULE)		INDICATES MASONRY/CMU WALL
C1	STEEL COLUMN SYMBOL (REFER TO STEEL COLUMN SCHEDULE)		INDICATES CONCRETE/TILT-UP CONCRETE WALL
T/SLAB X'-X"	ELEVATION SYMBOL (T/ REFERS TO COMPONENT THAT THE ELEVATION REFERENCES)		INDICATES WOOD OR STEEL STUD SHEAR WALL
3	STUD BUBBLE (INDICATES NUMBER OF STUDS REQUIRED IF EXCEEDS NUMBER SPECIFIED IN PLAN NOTE)		INDICATES BEARING WALL BELOW
	INDICATES STEP IN FOOTING (REFER TO TYPICAL STEP IN FOOTING DETAIL)		INDICATES EXISTING WALL
X/SX.X	DETAILS OR SECTION CUT (DETAIL NUMBER/SHEET NUMBER)		POST-TENSION DEAD END (PLAN)
X SX.X	DETAILS OR SECTION CUT IN PLAN VIEW (DETAIL NUMBER/SHEET NUMBER)		POST-TENSION STRESSING END (PLAN)
X/SX.X	INDICATES LOCATION OF CONCRETE WALLS, SHEAR WALLS OR BRACED FRAME ELEVATIONS	3	POST-TENSION PROFILE (PLAN) (IN INCHES)
	SPAN INDICATOR (INDICATES EXTENTS OF FRAMING MEMBERS OR OTHER STRUCTURAL COMPONENTS)		INTERMEDIATE STRESSING (PLAN)
	INDICATES DIRECTION OF DECK SPAN		

ABBREVIATIONS

∠	Angle	FIN	Finish	PSI	Pounds Per Square Inch
AB	Anchor Bolt	FLR	Floor	PSL	Parallel Strand Lumber
ADDL	Additional	FRP	Fiberglass Reinforced Plastic	P-T	Post-Tensioned
ALT	Alternate	FTG	Footing	PT	Pressure Treated
ARCH	Architectural	F/	Face of	R	Radius
B or BOT	Bottom	GA	Gage	RD	Roof Drain
B/	Bottom Of	GALV	Galvanized	REF	Refer/Reference
BLDG	Building	GEOTECH	Geotechnical	REINF	Reinforcing
BLKG	Blocking	GL	Glue Laminated Timber	REQD	Required
BMU	Brick Masonry Unit	GWB	Gypsum Wall Board	RET	Retaining
BP	Baseplate	HDR	Header	SCB	Special Concentric Braced
BRB	Buckling Resisting Braced	HF	Hem-Fir	SCHED	Schedule
BRG	Bearing	HGR	Hanger	SHTHG	Sheathing
BTWN	Between	HD	Hold-down	SIM	Similar
℄	Centerline	HORIZ	Horizontal	SMF	Special Moment Frame
C	Camber	HP	High Point	SOG	Slab on Grade
CB	Castellated Beam	HSS	= TS (Hollow Structural Section)	SPEC	Specification
CIP	Cast in Place	IBC	International Building Code	SQ	Square
CJ	Construction or Control Joint	ID	Inside Diameter	SR	Studrail
CJP	Complete Joint Penetration	IE	Invert Elevation	SF	Square Foot
CLR	Clear	IF	Inside Face	SST	Stainless Steel
CMU	Concrete Masonry Unit	INT	Interior	STAGG	Stagger/Staggered
COL	Column	k	Kips	STD	Standard
CONC	Concrete	KSF	Kips Per Square Foot	STIFF	Stiffener
CONN	Connection	LF	Lineal Foot	STL	Steel
CONST	Construction	LL	Live Load	STRUCT	Structural
CONT	Continuous	LLH	Long Leg Horizontal	SWWJ	Solid Web Wood Joist
C'SINK	Countersink	LLV	Long Leg Vertical	SYM	Symmetrical
CTRD	Centered	LP	Low Point	T	Top
#	Diameter	LONGIT	Longitudinal	T/	Top Of
DB	Drop Beam	LSL	Laminated Strand Lumber	T&B	Top & Bottom
DBA	Deformed Bar Anchor	LVL	Laminated Veneer Lumber	TC AX LD	Top Chord Axial Load
DBL	Double	MAS	Masonry	TCX	Top Chord Extension
DEMO	Demolish	MAX	Maximum	TDS	Tie Down System
DEV	Development	MECH	Mechanical	T&G	Tongue & Groove
DF	Douglas Fir	MEZZ	Mezzanine	THKND	Thickened
DIAG	Diagonal	MFR	Manufacturer	THRD	Threaded
DIST	Distributed	MIN	Minimum	THRU	Through
DL	Dead Load	MISC	Miscellaneous	TRANSV	Transverse
DN	Down	NIC	Not In Contract	TYP	Typical
DO	Ditto	NTS	Not To Scale	UBC	Uniform Building Code
DP	Depth/Deep	OC	On Center	UNO	Unless Noted Otherwise
DWG	Drawing	OCB	Ordinary Concentric Braced	URM	Unreinforced Masonry Unit
(E)	Existing	OD	Outside Diameter	VERT	Vertical
EA	Each	OF	Outside Face	W	Wide
EF	Each Face	OPNG	Opening	W/	With
EL	Elevation	OPP	Opposite	W/O	Without
ELEC	Electrical	OWSJ	Open Web Steel Joist	WHS	Welded Headed Stud
ELEV	Elevator	OWWJ	Open Web Wood Joist	WP	Working Point
EMBED	Embedment	PL	Plate	WWF	Welded Wire Fabric
EQ	Equal	PAF	Powder Actuated Fastener	±	Plus or Minus
EQUIP	Equipment	PC	Precast		
EW	Each Way	PERP	Perpendicular		
EXP	Expansion	PLWD	Plywood		
EXP JT	Expansion Joint	PP	Partial Penetration		
EXT	Exterior	PREFAB	Prefabricated		
FD	Floor Drain	PSF	Pounds per Square Foot		
FDN	Foundation				

100% CD SUBMITTAL

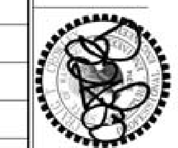

GENERAL NOTES
CAMPUS BRIDGE
SPA ADA MODIFICATIONS

S1.1

DLR Group
Architecture Engineering Planning Interiors

CONTRACTOR'S RESPONSIBILITIES: Contractor shall be responsible to review the Geotechnical Report and shall follow the recommendations specified therein including, but not limited to, subgrade preparations, pile installation procedures, ground water management and steep slope Best Management Practices."

GEOTECHNICAL SUBGRADE INSPECTION: The Geotechnical Engineer shall inspect all sub-grades and prepared soil bearing surfaces, prior to placement of foundation reinforcing steel and concrete. Geotechnical Engineers shall provide a letter to the owner stating that soils are adequate to support the "Allowable Foundation Bearing Pressure(s)" shown below.
[Assumed values shall be field verified by the Building Official or the Geotechnical Engineer prior to placing concrete.]

DESIGN SOIL VALUES:
Shallow Foundations:

Allowable Foundation Bearing Pressure	8000	PSF – Native
Passive Lateral Pressure	250	PSF/FT
Active Lateral Pressure (unrestrained)	35	PSF/FT
Active Lateral Pressure (restrained)	55	PSF/FT
Seismic Lateral Pressure	8H	PSF
Coefficient of Sliding Friction	0.4	

Deep Foundations:

42" Diameter Pile Tip Capacity	86	Kips
42" Diameter Side Compressive Capacity	205	Kips
42" Diameter Side Uplift Capacity	136	Kips

FOUNDATIONS and FOOTINGS: Foundations shall bear on piles and either on competent native soil or compacted structural fill as per the geotechnical report. Exterior perimeter footings shall bear not less than 18 inches below finish grade, unless otherwise specified by the geotechnical engineer and/or the building official.

FOOTING DEPTH: Tops of footings shall be as shown on plans with vertical changes as indicated with steps in the footings; locations of steps shown as approximate and shall be coordinated with the civil grading plans to ensure that the exterior perimeter footings bear no less than 18 inches below finish grade, or as otherwise indicated by the geotechnical engineer or building official.

CAST-IN-PLACE CONCRETE

REFERENCE STANDARDS: Conform to:
(1) ACI 301-10 "Specifications for Structural Concrete"
(2) IBC Chapter 19 "Concrete"
(3) ACI 318-11/318R-11 "Building Code Requirements for Structural Concrete"
(4) ACI 117-10 "Specifications for Tolerances for Concrete Construction and Materials"

FIELD REFERENCE: The contractor shall keep a copy of ACI Field Reference manual, SF-15, "Standard Specifications for Structural Concrete (ACI 301) with Selected ACI and ASTM References."

CONCRETE MIXTURES: Conform to ACI 301 Section 4 "Concrete Mixtures" and IBC Section 1904.3.

MATERIALS: Conform to ACI 301 Section 4.2.1 "Materials" for requirements for cementitious materials, aggregates, mixing water and admixtures.

SUBMITTALS: Provide all submittals required by ACI 301 Section 4.1.2. Submit mix designs for each mix in the table below. Substantiating strength results from past tests shall not be older than 24 months per ACI 318 Section 5.3.

TABLE OF MIX DESIGN REQUIREMENTS

Member Type/Location	Strength f'c (psi)	Test Age (days)	Maximum Aggregate	Exposure Class	Max W/C Ratio	Air Content	Notes (1 to 8 Typical UNO)
Retaining Wall Footings	3000	28	1"	-	-	-	-
Exterior Topping Slabs	3000	28	1"	-	0.45	5%	
Architectural / Exposed Building Walls	4000	28	½"	-	0.45	-	-
Site Retaining Walls	4000	28	¾"	-	0.45	5%	-
Drilled Pier	4000	28	1"	-	-	-	-

Table of Mix Design Requirements Notes:

(1) W/C Ratio: Water–cementitious material ratios shall be based on the total weight of cementitious materials. Maximum ratios are controlled by strength noted in the Table of Mix Design Requirements and durability requirements given in ACI 318 Section 4.3.

(2) Cementitious Materials:
  a. The use of fly ash, other pozzolans, silica fume, or slag shall conform to ACI 318 Sections 4.3.1 and 4.4.2. Maximum amount of fly ash shall be 25% of total cementitious content unless reviewed and approved otherwise by SER.
  b. Cementitious materials shall conform to the relevant ASTM standards listed in ACI 318 Section 3.2.1.

(3) Air Content: Conform to ACI 318 Section 4.4.1. Minimum standards for exposure class are noted in the table. If freezing and thawing class is not noted, air content given is that required by the SER. Tolerance is ±1-½%. Air content shall be measured at point of placement.

(4) Aggregates shall conform to ASTM C33.

(5) Slump: Conform to ACI 301 Section 4.2.2.2. Slump shall be determined at point of placement.

(6) Chloride Content: Conform to ACI 318 Section 4.3.1.

(7) Non- chloride accelerator: Non-chloride accelerating admixture may be used in concrete placed at ambient temperatures below 50°F at the contractor's option.

FORMWORK & RESHORING: Conform to ACI 301 Section 2 "Formwork and Form Accessories." Removal of Forms shall conform to Section 2.3.2 except strength indicated in Section 2.3.2.5 shall be 0.75 f' c.

MEASURING, MIXING, AND DELIVERY: Conform to ACI 301 Section 4.3.

HANDLING, PLACING, CONSTRUCTING AND CURING: Conform to ACI 301 Section 5. In addition, hot weather concreting shall conform to ACI 305.1-06 and cold weather concreting shall conform to ACI 306.1-90.

CONSTRUCTION JOINTS: Conform to ACI 301 Sections. 2.2.2.5, 5.2.2.1 and 5.3.2.6. Construction joints shall be located and detailed as on the construction drawings. Submit alternate locations per ACI 301 Section 5.1.2.3a for review and approval by the SER two weeks minimum prior to forming. Use of an acceptable adhesive, surface retardant, portland cement grout or roughening the surface is not required unless specifically noted on the drawings.

EMBEDDED ITEMS: Position and secure in place expansion joint material, anchors and other structural and non-structural embedded items before placing concrete. Contractor shall refer to mechanical, electrical, plumbing and architectural drawings and coordinate other embedded items.

GROUT: Use 7000 psi non-shrink grout under column base plates.

GROUTED REBAR: See Post-Installed Anchors to Concrete.

POST-INSTALLED ANCHORS to CONCRETE: Anchor location, type, diameter and embedment shall be as indicated on drawings. Reference the POST INSTALLED ANCHORS section for applicable Post-Installed Anchor Adhesives. Anchors shall be installed and inspected in strict accordance with the applicable ICC-Evaluation Service Report (ESR). Special inspection shall be per the TESTS and INSPECTIONS section.

STRENGTH TESTING AND ACCEPTANCE:

Testing: Obtain samples and conduct tests in accordance with ACI 301 Section 1.6.3.2. Additional samples may be required to obtain concrete strengths at alternate intervals than shown below.

- Cure 4 cylinders for 28-day test age. Test 1 cylinder at 7 days, test 2 cylinders at 28 days, and hold 1 cylinder in reserve for use as the Engineer directs. After 56 days, unless notified by the Engineer to the contrary, the reserve cylinder may be discarded without being tested for specimens meeting 28-day strength requirements.
- The number of cylinders indicated above reference 6 by 12 in cylinders. If 4 by 8 in cylinders are to be used, additional cylinders must be cured for testing of 3 cylinders at test age per the table of mix desigs requirements.

Acceptance. Strength is satisfactory when:

(1) The averages of all sets of 3 consecutive tests equal or exceed the specified strength.

(2) No individual test falls below the specified strength by more than 500 psi.

A "test" for acceptance is the average strength of two 6 by 12 in. cylinders or three 4 by 8 in. cylinders tested at the specified test age.

CONCRETE PLACEMENT TOLERANCE: Conform to ACI 117-10 for concrete placement tolerance.

OVER-FRAMING / STRUCTURAL FOAM FILL / RIGID INSULATION

FOAM FILL: Structural foam fill / rigid insulation as shown on the drawings shall be InsulFoam GF, by Insul-Foam LLC Engineered EPS, Type ASTM D6817, or approved equal. Provide in locations and thicknesses indicated on plans. Minimum Required Foam Properties are: Foam Type, InsulFoam EPS19; Density, 1.15 pcf; Compressive Resistance, 5.8 psi (at 1% deformation), 13.1 psi (at 5% deformation), and 16.0 psi (at 10% deformation).

CONCRETE REINFORCEMENT

REFERENCE STANDARDS: Conform to:
(1) ACI 301-10 "Standard Specifications for Structural Concrete", Section 3 "Reinforcement and Reinforcement Supports."
(2) ACI SP-66-04 "ACI Detailing Manual" including ACI 315-99 "Details and Detailing of Concrete Reinforcement."
(3) CRSI MSP-09, 28th Edition, "Manual of Standard Practice."
(4) ANSI/AWS D1.4 "Structural Welding Code - Reinforcing Steel."
(5) IBC Chapter 19-Concrete.
(6) ACI 318-11 "Building Code Requirements for Structural Concrete."
(7) ACI 117-10 "Specifications for Tolerances for Concrete Construction and Materials"

SUBMITTALS: Conform to ACI 301 Section 3.1.1 "Submittals, data and drawings." Submit placing drawings showing fabrication dimensions and locations for placement of reinforcement and reinforcement supports.

MATERIALS:

Reinforcing Bars	ASTM A615, Grade 60, deformed bars.
Bar Supports	CRSI MSP-09, Chapter 3 "Bar Supports."
Tie Wire	16 gage or heavier, black annealed.

FABRICATION: Conform to ACI 301, Section 3.2.2. "Fabrication", and ACI SP-66 "ACI Detailing Manual."

WELDING: Bars shall not be welded unless authorized. When authorized, conform to ACI 301, Section 3.2.2.2. "Welding", AWS D1.4, and provide ASTM A706, grade 60 reinforcement.

PLACING: Conform to ACI 301, Section 3.3.2 "Placement." Placing tolerances shall conform to ACI 117.

CONCRETE COVER: Conform to the following cover requirements unless noted otherwise in the drawings.

Concrete cast against earth	3"
Concrete exposed to earth or weather	2"
Ties in columns and beams	1-½"
Bars in slabs	¾"
Bars in walls	¾"
Exterior bars in Tilt-up Panels	1"

SPLICES: Conform to ACI 301, Section 3.3.2.7, "Splices". Refer to "Typical Lap Splice and Development Length Schedule" for typical reinforcement splices. Splices indicated on individual sheets shall control over the schedule. Mechanical connections may be used when approved by the SER.

FIELD BENDING: Conform to ACI 301 Section 3.3.2.8. "Field Bending or Straightening." Bar sizes #3 through #5 may be field bent cold the first time. Other bars require preheating. Do not twist bars. Bars shall not be bent past 45 degrees.

POST-INSTALLED ANCHORS

REFERENCE STANDARDS: Conform to:
1) IBC Chapter 19 "Concrete"
2) ACI 318-11 "Building Code Requirements for Structural Concrete"
3) IBC Chapter 21 "Masonry"
4) ACI 530-11/ASCE 5-11/TMS402-11 "Building Code Requirements for Masonry Structures"

POST-INSTALLED ANCHORS: Install only where specifically shown in the details or allowed by SER. All post-installed anchors types and locations shall be approved by the SER and shall have a current ICC-Evaluation Service Report that provides relevant design values necessary to validate the available strength exceeds the required strength. Submit current manufacturer's data and ICC ESR report to SER for approval regardless of whether or not it is a pre-approved anchor. Anchors shall be installed in strict accordance to ICC-ESR and manufacturer's instructions. No reinforcing bars shall be damaged during installation of post-installed anchors. Special inspection shall be per the TESTS and INSPECTIONS section. Anchor type, diameter and embedment shall be as indicated on drawings.

1. ADHESIVE ANCHORS: The following Adhesive-type anchoring systems have been used in the design and shall be used for anchorage to CONCRETE, as applicable and in accordance with corresponding current ICC ESR report. Drilled-in anchor embedment lengths shall be as shown on drawings, or not less than 7 times the anchor nominal diameter (7D).

   a. HILTI "HIT-RE 500 SD" – ICC ESR-2322 for anchorage to CONCRETE with any embedment depth

   b. SIMPSON "SET-XP" – ICC ESR 2508 for anchorage to CONCRETE

STRUCTURAL STEEL

REFERENCE STANDARDS: Conform to:
1) IBC Chapter 22 – "Steel"
2) ANSI/AISC 303-10 – "Code of Standard Practice for Steel Buildings & Bridges"
3) ANSI/AISC 325-10 – "Steel Construction Manual"
4) ANSI/AISC 360-10 – "Specification for Structural Steel Buildings"
5) AWS D1.1:2010 – "Structural Welding Code – Steel"
6) 2009 RCSC – "Specification for Structural Joints using High-Strength Bolts"

SUBMITTALS: Submit the following documents to the SER for review:

(1) SHOP DRAWINGS complying with AISC 360 Sections M1and N3 and AISC 303 Section 4.
(2) ERECTION DRAWINGS complying AISC 360 Sections M1and N3 and AISC 303 Section 4.

Make copies of the following documents "Available upon Request" to the SER or Owner's Inspection Agency in electronic or printed form prior to fabrication per AISC 360 Section N3.2 requirements:

(1) Fabricator's written Quality Control Manual that includes, as a minimum:
  a. Material Control Procedures
  b. Inspection Procedures
  c. Non-conformance Procedures
(2) Steel & Anchor Rod suppliers' Material Test Reports (MTR's) indicating the compliance with specifications.
(3) Fastener manufacturer's Certification documenting conformance with the specification.
(4) Filler metal manufacturer's product data for SMAW, FCAW and GMAW indicating:
  a. Product specification compliance
  b. Recommended welding parameters
  c. Recommended storage and exposure requirements including baking
  d. Limitations of use
(5) Welded Headed (Shear) Stud Anchors Manufacturer's certification indicating the meet specifications.
(6) Weld Procedure Specifications (WPS's) for shop and field welding.
(7) Manufacturer's Certificates of Conformance for electrodes, fluxes and gases (welding consumables).

(8) Procedure Qualification Records (PQR's) for WPS's that are not prequalified in accordance with AWS.
(9) Welding personnel Performance Qualification Records (WPQR) and continuity records conforming to AWS standards and WABO standards as applicable for Washington State projects.

MATERIALS:
Structural steel materials shall conform to materials and requirements listed in AISC 360 section A3 including, but not limited to:

Wide Flange (W), Tee (WT) Shapes	ASTM A992 Fy = 50 ksi
Channel (C) & Angle (L) Shapes	ASTM A36, Fy = 36 ksi
Structural Plate (PL)	ASTM A36, Fy = 36 ksi
Hollow Structural Section – Square/Rect (HSS)	ASTM A500, Grade B, Fy = 46 ksi
High Strength, Heavy Hex Structural Bolts	ASTM A325/F1852, Type 1 or 3, Plain
Heavy Hex Nuts	ASTM A563, Grade and Finish per RCSC Table 2.1
Washers (Hardened Flat or Beveled)	ASTM F436, Grade and Finish per RCSC Table 2.1
Anchor Rods (High Strength)	ASTM F1554, Gr. 55 (weldable) per Supplement S1
Welded Headed (shear) Stud Anchors	ASTM A108 – Nelson/TRW S3L
Welded Headed Stud (WHS) Anchors	ASTM A108 – Nelson/TRW H4L

STRUCTURAL JOINTS USING HIGH-STRENGTH BOLTS:

1) ASTM A325-SC bolts – "threads NOT excluded in the shear plane".
2) High-strength bolted joints have been designed as "BEARING" connections.
3) Provide ASTM Bolt Grade and Type as specified in the Materials section above.
4) Provide Washers over outer ply of slotted holes and oversize holes per RCSC Table 6.1.
5) Provide Nut and Washer grades, types and finishes conforming to RCSC specification Table 2.1.
6) Provide fastener assemblies from a single supplier.
7) Joint Types shall be:
  a. SC - "Slip Critical", where specifically indicated. Provide with Class A Faying surface.
8) Install bolts in joints in accordance with the RCSC Specification Section 8 and Table 4.1.
9) Inspection is per RCSC Section 9.

ANCHORAGE to CONCRETE:

1) EMBEDDED STEEL PLATES for Anchorage to Concrete: Plates (PL) embedded in concrete with studs (WHS) or dowel bar anchors (DBA) shall be of the sizes and lengths as indicated on the plans with minimum 1/2" dia. WHS x 6" long but provide not less than ¾" interior cover or 1 ½" exterior cover to the opposite face of concrete, unless noted otherwise.

2) COLUMN ANCHOR RODS and BASE PLATES: All columns (vertical member assemblies weighing over 300 pounds) shall be provided with a **minimum of four ¾" diameter anchor rods**. Column base plates shall be at least ¾" thick, unless noted otherwise. Cast-in-place anchor rods shall be provided unless otherwise approved by the Engineer. Unless noted otherwise, embedment of cast-in-place anchor rods shall be 12 times the anchor diameter (12D).

FABRICATION:

1) Conform to AISC 360 Section M2 "Fabrication" and AISC 303 Section 6 "Shop Fabrication".

2) Quality Control (QC) shall conform to:
  a. AISC 360 Chapter N "Quality Control and Quality Assurance" and
  b. AISC 303 Section 8 "Quality Control".
  c. Fabricator and Erector shall establish and maintain written Quality Control (QC) procedures per AISC 360 section N3.
  d. Fabricator shall perform self-inspections per AISC 360 section N5 to ensure that their work is performed in accordance with Code of Standard Practice, the AISC Specification, Contract Documents and the Applicable Building Code.
  e. QC inspections may be coordinated with Quality Assurance inspections per Section N5.3 where fabricators QA procedures provide the necessary basis for material control, inspection, and control of the workmanship expected by the Special Inspector.

WELDING:

1) Welding shall conform to AWS D1.1 with Prequalified Welding Processes except as modified by AISC 360 section J2. Welders shall be qualified in accordance with AWS D1.1 and WABO requirements.
2) Use 70ksi strength, low-hydrogen type electrodes (E7018) or E71T as appropriate for the process selected.
3) Welding of high strength anchor rods is prohibited unless approved by Engineer.
4) Welding of headed stud anchors shall be in accordance with AWS D1.1 Chapter 7 "Stud Welding".

ERECTION:

1) Conform to AISC 360 Section M4 "Erection" and AISC 303 Section 7 "Erection".
2) Conform to AISC 360 Chapter N "Quality Control and Quality Assurance" and AISC 303 Section 8.
  a. The Erector shall maintain detailed erection quality control procedures that ensure that the work is performed in accordance with these requirements and the Contract Documents.
3) Steel work shall be carried up true and plumb within the limits defined in AISC 303 Section 7.13.
4) High strength bolting shall comply with the RCSC requirements including RCSC Section 7.2 "Required Testing", as applicable and AISC 360 Chapter J, Section M2.5 and Section N5.6.
5) Welding of HEADED STUD ANCHORS shall be in accordance with AWS D1.1 Chapter 7 "Stud Welding.
6) Provide Headed (Shear) Stud Anchors welded through the metal deck to tops of beams denoted in plans.
7) The contractor shall provide temporary bracing and safety protection required by AISC 360 Section M4.2 and AISC 303 Section 7.10 and 7.11.

PROTECTIVE COATING REQUIREMENTS:

1) SHOP PAINTING: Conform to AISC 360 Section M3 and AISC 303 Section 6.5 unless otherwise specified by the project specifications.

2) EXTERIOR STEEL: Exposed exterior steel shall be protected by either:
  a. Paint with an exterior multi-coat system as per the project specifications. Field touch-up painting shall be to match top coat.

DCI ENGINEERS
601 W. RIVERSIDE • SUITE 600
SPOKANE, WASHINGTON 99201
PHONE: (509) 455-4448 • FAX: (509) 455-7492
WEBSITE: www.dci-engineers.com
CIVIL / STRUCTURAL
© Copyright 03/2013 D'Amato Conversano Inc. All Rights Reserved

100% CD SUBMITTAL

GENERAL NOTES
CAMPUS BRIDGE
SPA ADA MODIFICATIONS

S1.2
12041-0236
06.17.14
Revisions

DLR Group
Architecture Engineering Planning Interiors
© DLR Group inc., a Washington corporation. ALL RIGHTS RESERVED

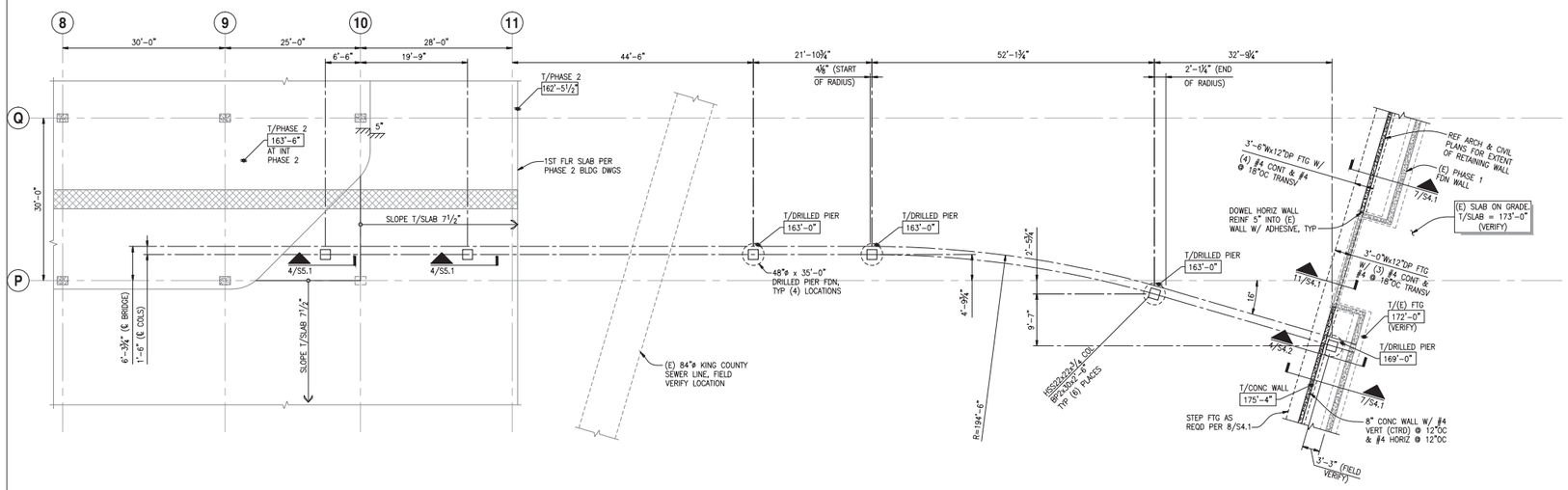

FOUNDATION PLAN NOTES:

1. STRUCTURAL GENERAL NOTES, DESIGN CRITERIA, ABBREVIATIONS AND LEGEND PER S1.1 AND S1.2.
2. VERIFY ALL DIMENSIONS AND ELEVATIONS WITH THE ARCHITECTURAL DRAWINGS. ALL EXISTING DIMENSIONS SHALL BE FIELD VERIFIED.
3. VERIFY ALL EXISTING CONDITIONS PRIOR TO FABRICATION AND REPORT ANY DISCREPANCIES TO ARCHITECT AND ENGINEER OF RECORD.
4. FIELD VERIFY LOCATION OF EXISTING KING COUNTY SEWER AND ALL OTHER UTILITIES PRIOR TO COMMENCING WORK.
5. CONTRACTOR TO VERIFY TOP OF CONCRETE (T/CONC) WALL ELEVATIONS ON ALL PARTIAL HEIGHT RETAINING WALLS. MAINTAIN T/WALL ELEVATION A MINIMUM OF 6" ABOVE FINISH GRADE PER 7/S4.1.
6. TYPICAL DETAILS PER:

4/S4.1	STANDARD HOOKS AND BAR BENDS
8/S4.1	TYPICAL STEPPED FOOTING
12/S4.1	TYPICAL LAP SPLICE SCHEDULE

BRIDGE FOUNDATION PLAN

SCALE: 3/32"=1'-0"

N

DCI ENGINEERS
601 W. RIVERSIDE • SUITE 600
SPOKANE, WASHINGTON 99201
PHONE: (509) 455-4448 • FAX: (509) 455-7692
WEBSITE: www.dci-engineers.com
CIVIL / STRUCTURAL
© Copyright 2012/13 D'Amico Cameramano Inc. All Rights Reserved

100% CD SUBMITTAL

FOUNDATION PLAN
CAMPUS BRIDGE
SPA ADA MODIFICATIONS

S2.1
12041-0236
06.17.14
Revisions

DLR Group
Architecture Engineering Planning Interiors
© DLR Group inc., a Washington corporation, ALL RIGHTS RESERVED

12041-0236-S21.dwg 17-Jun-14 1:06 PM jhancock

ATTACHMENT 9
FILE NO. SEP14-01380
BRIDGE PERMIT BNR14-03425

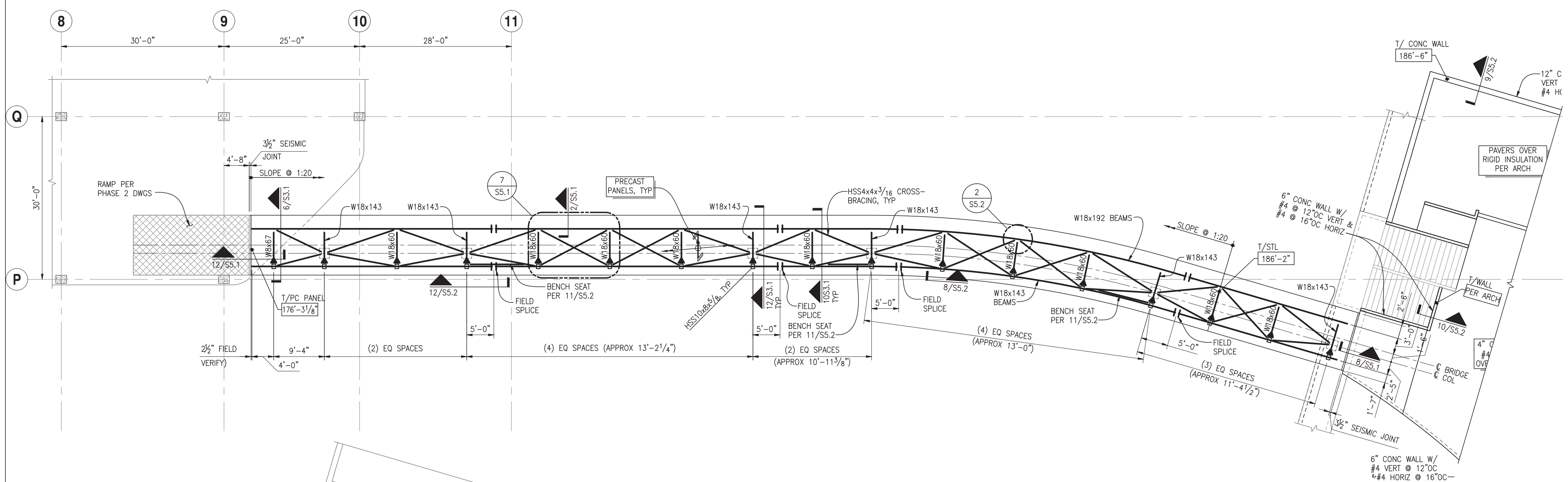

BRIDGE FRAMING PLAN
SCALE: 3/32"=1'-0"

PHASE 1 OVERFRAMING PLAN
SCALE: 3/32"=1'-0"

FLOOR FRAMING PLAN NOTES:

1. STRUCTURAL GENERAL NOTES, DESIGN CRITERIA, ABBREVIATIONS AND LEGEND PER S1.1 AND S1.2.
2. VERIFY ALL DIMENSIONS AND ELEVATIONS WITH THE ARCHITECTURAL DRAWINGS. ALL EXISTING DIMENSIONS SHALL BE FIELD VERIFIED.
3. VERIFY ALL EXISTING CONDITIONS PRIOR TO FABRICATION AND REPORT ANY DISCREPANCIES TO ARCHITECT AND ENGINEER OF RECORD.
4. T/STL X'-X" INDICATES TOP OF STEEL (T/STL) ELEVATION.
5. CONTRACTOR IS RESPONSIBLE FOR ALL TEMPORARY SHORING.

DCI ENGINEERS
601 W. RIVERSIDE • SUITE 600
SPOKANE, WASHINGTON 99201
PHONE (509) 455-4448 • FAX (509) 455-7492
WEBSITE: www.dci-engineers.com
CIVIL / STRUCTURAL

100% CD SUBMITTAL

BRIDGE FRAMING PLAN
CAMPUS BRIDGE
SPA ADA MODIFICATIONS

S2.2
12041-0236
06.17.14
Revisions

DLR Group
Architecture Engineering Planning Interiors
© DLR Group inc., a Washington corporation, ALL RIGHTS RESERVED

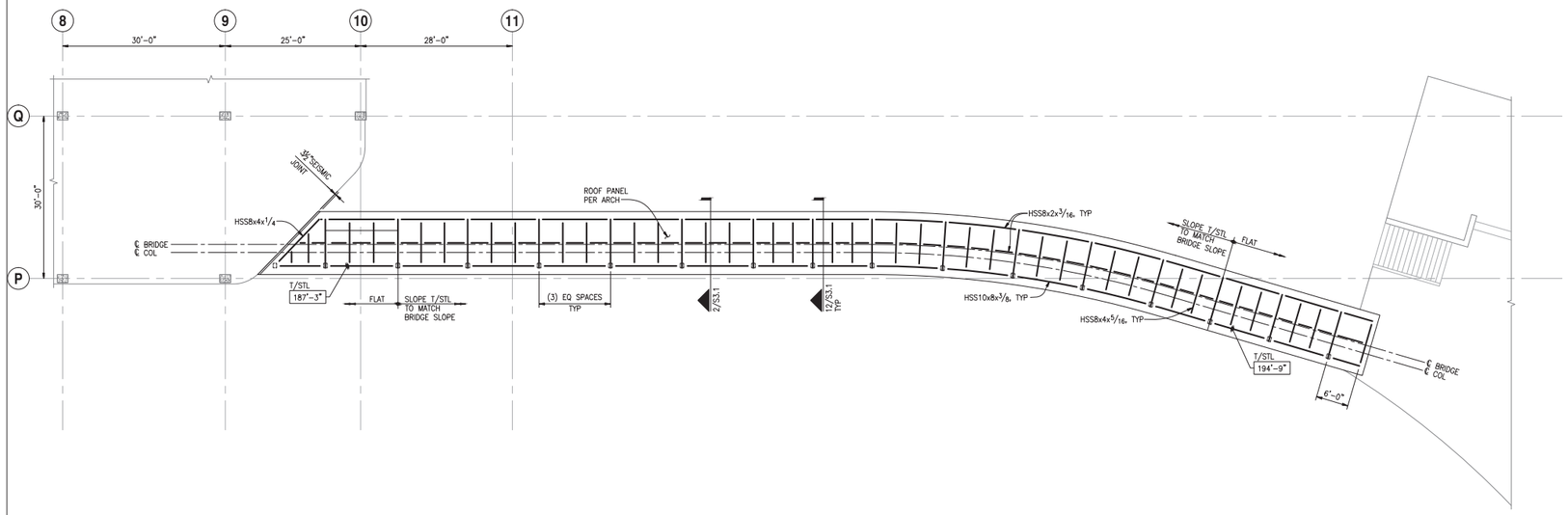

FLOOR FRAMING PLAN NOTES:

1. STRUCTURAL GENERAL NOTES, DESIGN CRITERIA, ABBREVIATIONS AND LEGEND PER S1.1 AND S1.2.
2. VERIFY ALL DIMENSIONS AND ELEVATIONS WITH THE ARCHITECTURAL DRAWINGS. ALL EXISTING DIMENSIONS SHALL BE FIELD VERIFIED.
3. VERIFY ALL EXISTING CONDITIONS PRIOR TO FABRICATION AND REPORT ANY DISCREPANCIES TO ARCHITECT AND ENGINEER OF RECORD.
4. T/STL X'-X" INDICATES TOP OF STEEL (T/STL) ELEVATION.
5. CONTRACTOR IS RESPONSIBLE FOR ALL TEMPORARY SHORING.

BRIDGE ROOF FRAMING PLAN

SCALE: 3/32"=1'-0"

N

DCI ENGINEERS
601 W. RIVERSIDE • SUITE 600
SPOKANE, WASHINGTON 99201
PHONE: (509) 455-4448 • FAX: (509) 455-7692
WEBSITE: www.dci-engineers.com
CIVIL / STRUCTURAL

© Copyright 03/2013 3Phase Consultants Inc. All Rights Reserved
This document and the ideas and designs may not be copied, in whole or in part, without the express written consent of 3Phase Consultants Inc. Reviewers are responsible for its unauthorized use.

100% CD SUBMITTAL

BRIDGE ROOF FRAMING PLAN
CAMPUS BRIDGE
SPA ADA MODIFICATIONS

S2.3
12041.0235
06.17.14
Revisions

DLR Group
Architecture Engineering Planning Interiors

© DLR Group Inc., a Washington corporation. ALL RIGHTS RESERVED

12041-0235-S23.dwg 17-Jun-14 1:04 PM jbancock

DCI ENGINEERS
601 W. RIVERSIDE • SUITE 600
SPOKANE, WASHINGTON 99201
PHONE: (509) 455-4448 • FAX: (509) 455-7892
WEBSITE: www.dci-engineers.com
CIVIL / STRUCTURAL
© Copyright 2012/13 D'Amico Carvemarro Inc. All Rights Reserved

100% CD SUBMITTAL

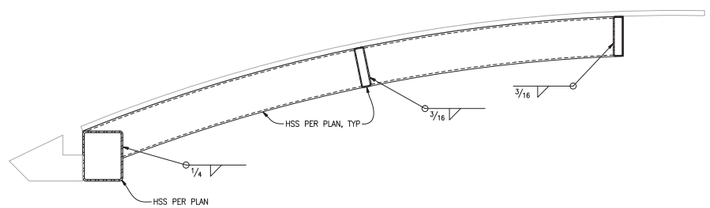

NOTE:
ADDITIONAL INFORMATION PER 12/S3.1.

CANOPY SECTION BETWEEN COLUMNS (2)
SCALE: 1"=1'-0"

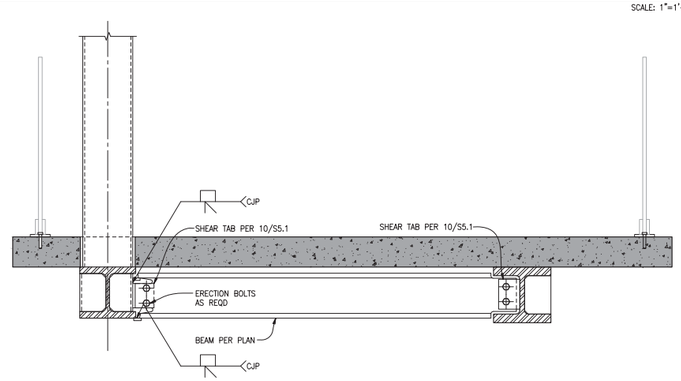

NOTE:
ADDITIONAL INFORMATION PER 12/S3.1.

BRIDGE SECTION AT TAPERED GIRDERS (6)
SCALE: 1"=1'-0"

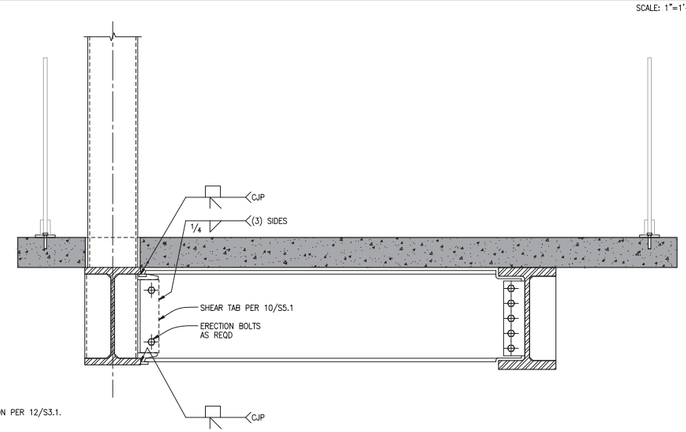

NOTE:
ADDITIONAL INFORMATION PER 12/S3.1.

BRIDGE SECTION AT INTERMEDIATE COLUMN (10)
SCALE: 1"=1'-0"

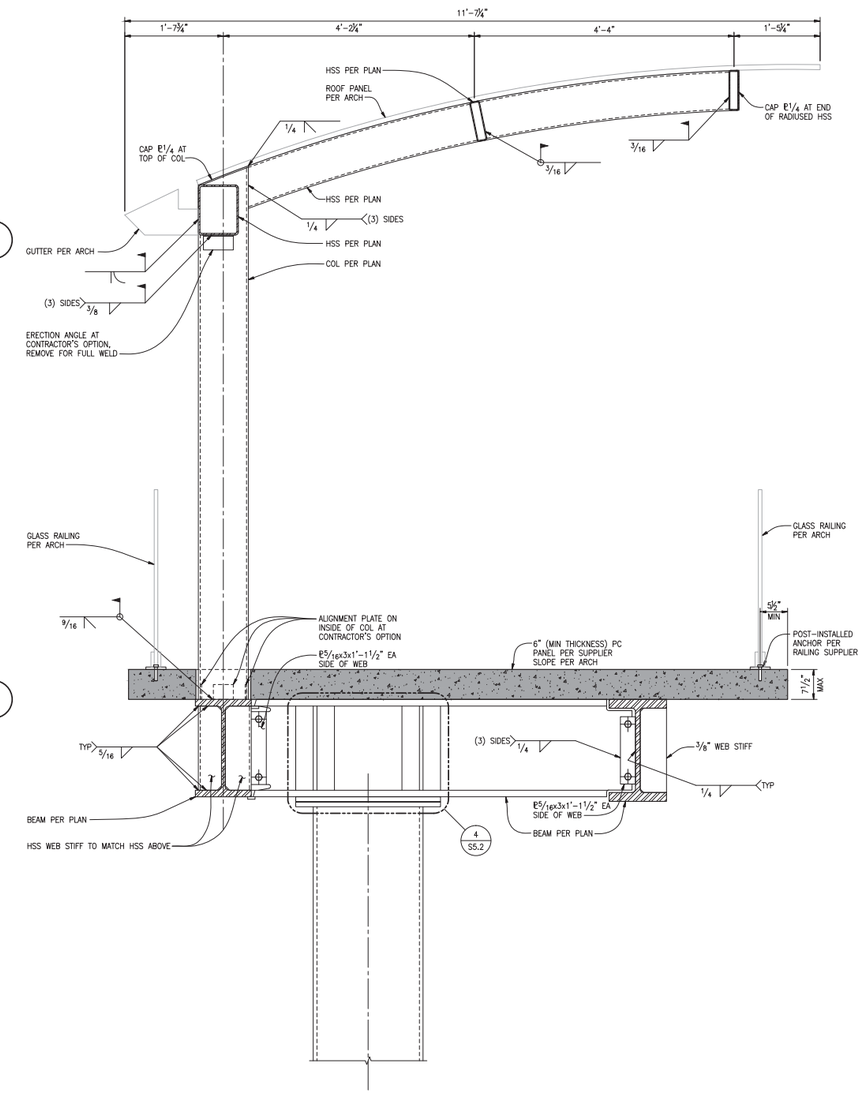

BRIDGE SECTION AT SUPPORT COLUMN (12)
SCALE: 1"=1'-0"

STRUCTURAL DETAILS
CAMPUS BRIDGE
SPA ADA MODIFICATIONS

S3.1
12041-0236
08.17.14
Revisions

DLR Group
Architecture Engineering Planning Interiors

© DLR Group inc., a Washington corporation, ALL RIGHTS RESERVED

17-Jun-14 1:24 PM jhancock
12041-0236-S13.dwg

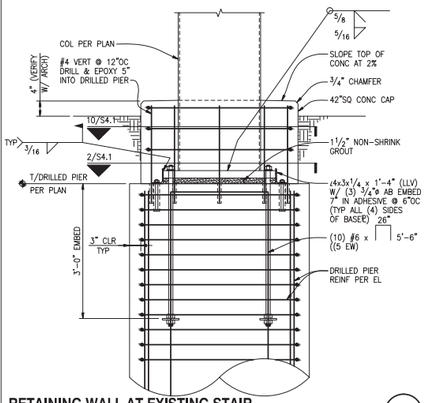

RETAINING WALL AT EXISTING STAIR

SCALE: 3/4"=1'-0"

1

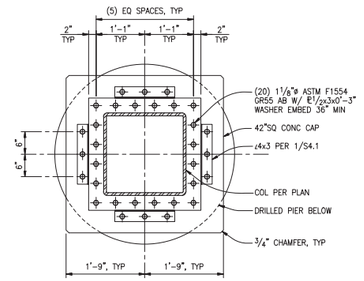

PLAN AT DRILLED PIER

SCALE: 3/4"=1'-0"

2

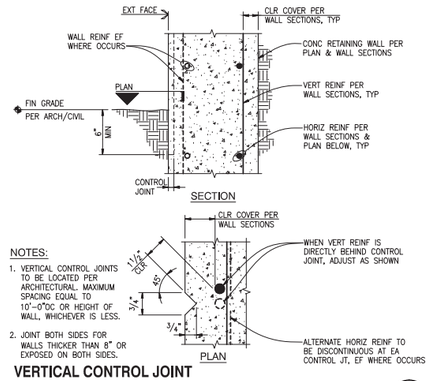

NOTES:

1. VERTICAL CONTROL JOINTS TO BE LOCATED PER ARCHITECTURAL. MAXIMUM SPACING EQUAL TO 10'-0"OC OR HEIGHT OF WALL, WHICHEVER IS LESS.
2. JOINT BOTH SIDES FOR WALLS THICKER THAN 8" OR EXPOSED ON BOTH SIDES.

VERTICAL CONTROL JOINT AT CONCRETE RETAINING WALLS

02310

SCALE: NONE

3

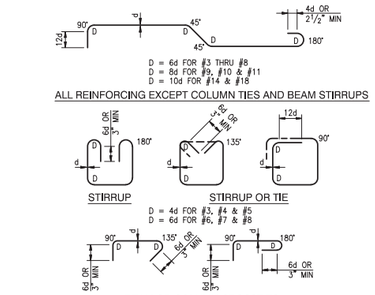

NOTE:

TIES AND CROSSTIES FOR SHEAR WALL BOUNDARY ELEMENTS SHALL BE DETAILED AS COLUMN TIES/CROSSTIES.

STANDARD HOOKS AND BENDS - BEAM STIRRUPS AND COLUMN TIES

03400 (FOR REVISIONS TO STANDARD HOOKS & BENDS REF TO CURRENT ACI)

SCALE: NONE

4

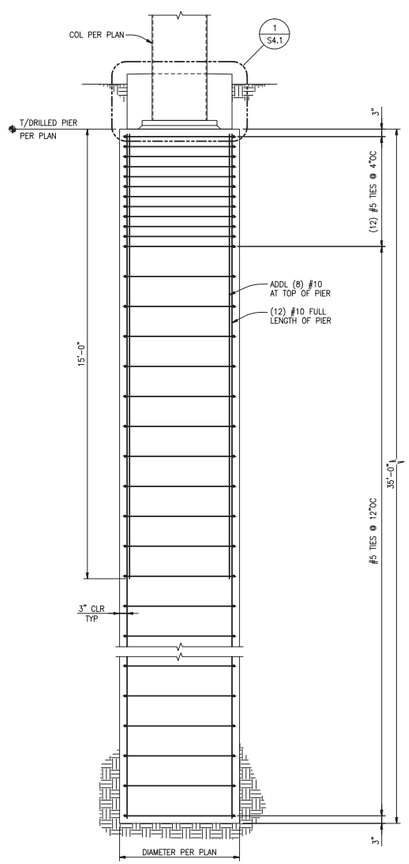

DRILLED PIER ELEVATION

SCALE: 1/2"=1'-0"

9

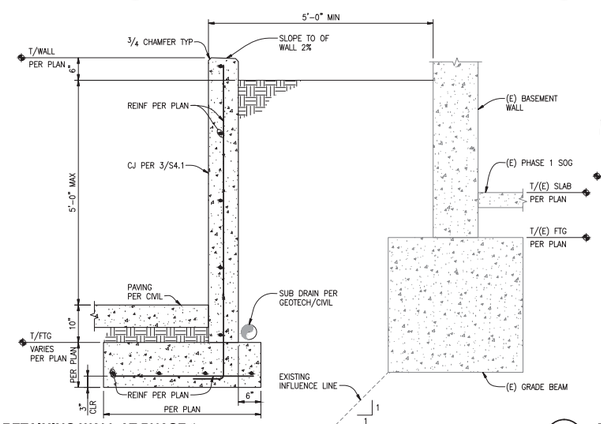

RETAINING WALL AT PHASE 1

SCALE: 3/4"=1'-0"

7

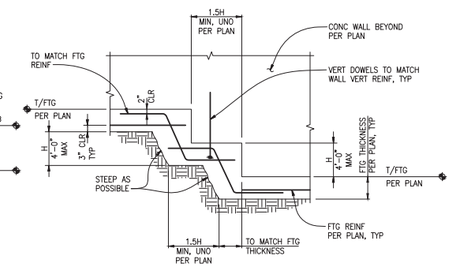

TYPICAL STEPPED FOOTING

03901

SCALE: NONE

8

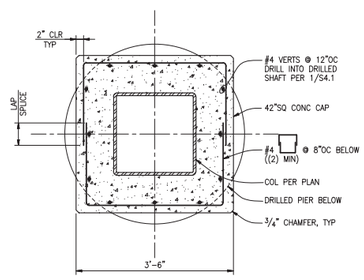

SECTION AT CONCRETE CAP

SCALE: 3/4"=1'-0"

10

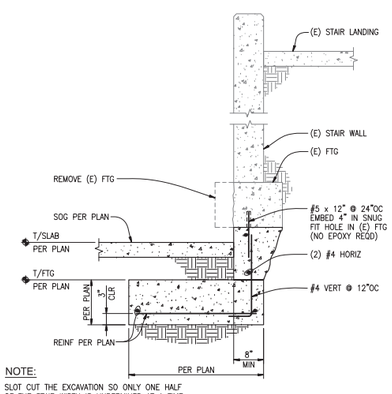

NOTE:

SLOT CUT THE EXCAVATION SO ONLY ONE HALF OF THE STAIR WIDTH IS UNDERMINED AT A TIME.

RETAINING WALL AT EXISTING STAIR

SCALE: 3/4"=1'-0"

11

BAR SIZE	MISC BARS		TOP BARS (see note #4)		HOOKED BARS
	Ld	Splice	Ld	Splice	Ldh
f'c = 3000psi					
#3	17	23	22	29	9
#4	22	29	29	38	11
#5	28	37	36	47	14
#6	33	43	43	56	17
#7	48	63	63	82	20
#8	55	72	72	94	22
#9	62	81	81	106	25
#10	70	91	91	119	28
#11	78	102	101	132	31

BAR SIZE	MISC BARS		TOP BARS (see note #4)		HOOKED BARS
	Ld	Splice	Ld	Splice	Ldh
f'c = 4000psi					
#3	15	20	19	25	8
#4	19	25	25	33	10
#5	24	32	31	41	12
#6	29	38	37	49	15
#7	42	55	54	71	17
#8	48	63	62	81	19
#9	54	71	70	91	22
#10	61	80	79	103	25
#11	67	88	87	114	27

NOTES:

1. VALUES FOR UNCOATED REINFORCING AND NORMAL WEIGHT CONCRETE WITH CLEAR SPACING > db, CLEAR COVER > db AND MINIMUM STIRRUPS OR TIES THROUGHOUT Ld OR CLEAR SPACING > 2db AND CLEAR COVER > db.
2. DEVELOP ALL REINFORCING IN STRUCTURAL SLABS WITH MINIMUM DEVELOPMENT LENGTH Ld.
3. Ldh = DEVELOPMENT LENGTH OF BAR WITH STANDARD HOOK.
4. TOP BAR = HORIZONTAL BAR WITH MORE THAN 12" OF FRESH CONCRETE BELOW (EXCLUDING WALL HORIZONTAL REINFORCING) OR AS NOTED ON DOCUMENTS AS "TOP BAR".
5. ALL TABULATED VALUES ARE IN INCHES.

TYPICAL LAP SPLICE AND DEVELOPMENT LENGTH SCHEDULE

01400M

SCALE: NONE

12

DCI ENGINEERS
601 W. RIVERSIDE • SUITE 600
SPOKANE, WASHINGTON 99201
PHONE: (509) 455-4448 • FAX: (509) 455-7692
WEBSITE: www.dci-engineers.com
CIVIL / STRUCTURAL

© Copyright 03/2013 DiNardo Conversano Inc. All Rights Reserved
This document, and the ideas and designs deep into be reused in whole or in part without the express written consent of DiNardo Conversano Inc. doing so is the responsibility for its unauthorized use.

100% CD SUBMITTAL

STRUCTURAL DETAILS
CAMPUS BRIDGE
SPA ADA MODIFICATIONS

S4.1

13041-02B6
06.17.14
Revisions

DLR Group
Architecture Engineering Planning Interiors

© DLR Group inc., a Washington corporation, ALL RIGHTS RESERVED

13041-02B6-S41.dwg 17-Jun-14 1:06 PM jhancock

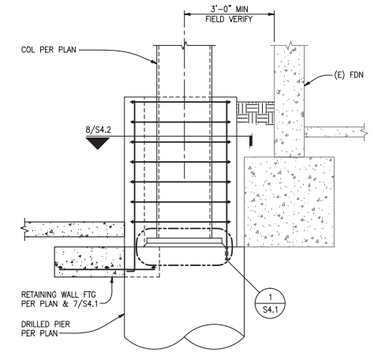

SECTION 4
SCALE: 1/2"=1'-0"

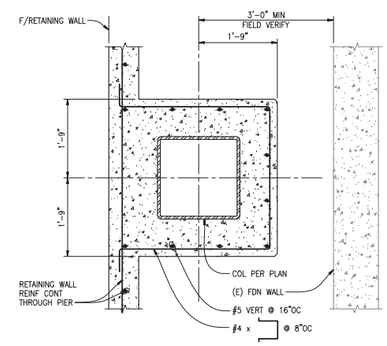

SECTION 8
SCALE: 3/4"=1'-0"

DCI ENGINEERS
601 W. RIVERSIDE • SUITE 600
SPOKANE, WASHINGTON 99201
PHONE: (509) 455-4448 • FAX: (509) 455-7892
WEBSITE: www.dci-engineers.com
CIVIL / STRUCTURAL
© Copyright 2020/21 D'Ambra Conversano Inc. All Rights Reserved
This document, and the ideas and designs deep into be recorded in stone or other permanent medium, is the property of D'Ambra Conversano Inc. Reuse in any manner without the written permission of D'Ambra Conversano Inc. disclaim any responsibility for its unauthorized use.

100% CD SUBMITTAL

STRUCTURAL DETAILS
CAMPUS BRIDGE
SPA ADA MODIFICATIONS

S4.2
13041-0236
06.17.14
Revisions

DLR Group
Architecture Engineering Planning Interiors
© DLR Group inc., a Washington corporation, ALL RIGHTS RESERVED

13041-0236-S42.dwg 17-Jun-14 1:04 PM jhancock

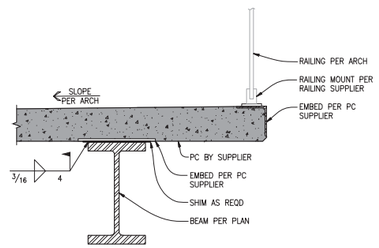

PRECAST ATTACHMENT (2)

SCALE: 1"=1'-0"

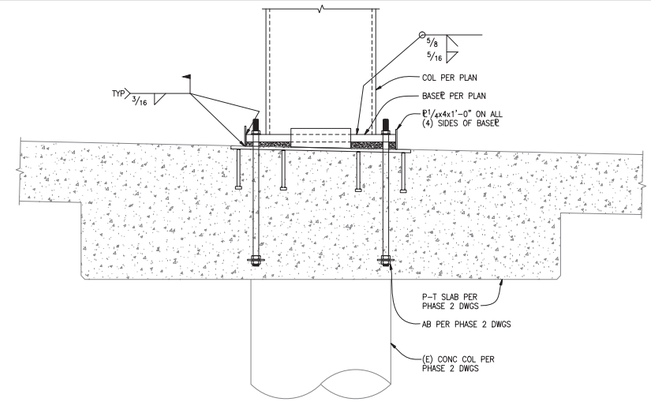

PEDESTRIAN BRIDGE ANCHOR BOLTS (4)

SCALE: 1"=1'-0"

BOLTED SINGLE SHEAR PLATE CONNECTION - SCHEDULE "A"						
3/4" Ø - A325-N		SINGLE ROW		BEAM Fy=50KSI – CONNECTION PLATE Fy=36KSI		
BEAM SIZE	"N" BOLTS REQUIRED (1)	MIN SHEAR PLATE OR WT STEM THICKNESS	MIN HSS COLUMN WALL THICKNESS (10)	WELD SIZE t (7)	MAX SINGLE COPE DEPTH (9)	MAX DOUBLE COPE DEPTH (9)
C8,C9,C10	2	1/4"	1/4"	3/16"	1 1/4"	NR (11)
W8	2	1/4"	1/4"	3/16"	1 1/4"	NR (11)
W10	2	1/4"	1/4"	3/16"	2 1/2"	1 1/4"
C12,C15	3	1/4"	1/4"	3/16"	2"	1 1/4"
W12	3	1/4"	1/4"	3/16"	2"	1 1/4"
W14	3	5/16"	1/4"	1/4"	2 1/2"	1 1/2"
W16	4	5/16"	1/4"	1/4"	2 1/2"	1 1/2"
W18	5	5/16"	5/16"	1/4"	2 1/2"	1 1/2"
W21	6	3/8"	5/16"	5/16"	2 1/2"	1 1/2"
W24	7	3/8"	5/16"	5/16"	2 1/2"	1 1/2"
W27	8	3/8"	3/8"	5/16"	2 1/2"	NR (11)
W30	8	7/16"	3/8"	5/16"	2 1/2"	NR (11)
W33	9	7/16"	3/8"	5/16"	2 1/2"	NR (11)
W36	10	7/16"	3/8"	5/16"	2 1/2"	NR (11)

BOLTED SINGLE ROW SHEAR PLATE CONNECTION NOTES:

1. PROVIDE EITHER STANDARD OR HORIZONTAL SHORT SLOTTED HOLES AS PERMITTED BY AISC J3.2 IN THE BEAM WEB AND/OR THE SHEAR PLATE.
2. WHERE SHORT-SLOTTED HOLES ARE USED, PROVIDE HARDENED WASHERS PER AISC J3.2.
3. CAPACITIES BASED ON AISC 13TH EDITION WITH ASTM A325-SC BOLTS.
4. HORIZONTAL DISTANCE FROM SUPPORT FACE TO CENTERLINE OF BOLT GROUP SHALL BE AS SHOWN IN THE DETAILS, BUT SHALL NOT EXCEED 3 1/2" IN THE AS-BUILT CONDITION. SUPPORT FACE FOR TEE IS THE INSIDE FACE OF FLANGE.
5. VERTICAL EDGE DISTANCE FROM BOLT CENTERLINE TO EDGE OF STEEL SHALL BE 1 1/2" TYPICALLY, EXCEPT THAT 1 1/4" IS PERMITTED PER AISC TABLE J3.4 FOR 3/4" DIAMETER BOLTS WITHOUT ANY REDUCTION IN THE TABULATED CAPACITIES.
6. GAP BETWEEN BEAM END AND SUPPORT FACE SHALL BE 1/2" EXCEPT FOR "WT" CONNECTORS USED WITH HSS COLUMNS. WHERE "WT" ARE USED AS SHEAR TAB ELEMENTS, THE GAP BETWEEN FACE OF COLUMN AND END OF BEAM SHALL NOT EXCEED THE LESSER OF 1 1/2" OR THE "k" DISTANCE OF THE "WT" PLUS 1/4".
7. WELD SIZES SHALL BE THE LARGER OF THE SIZE (t), TABULATED IN SCHEDULE "A" OR MINIMUM SHOWN IN TABLE 1.
8. FIELD FILLET WELDS SHALL BE SIZED TO BE AT LEAST 1/8" LARGER THAN THE WELD SIZE SHOWN IN SCHEDULE "A", UNLESS PROPER FIT-UP IS VERIFIED BY A SPECIAL INSPECTOR PRIOR TO WELDING.
9. COPE DEPTHS (SINGLE AND DOUBLE) SHALL NOT EXCEED THE LESSER OF THOSE SHOWN IN SCHEDULE "A", NOR AS ALLOWED BY BOLT HOLE SPACING AND MINIMUM EDGE DISTANCE REQUIREMENTS. SINGLE COPE LENGTH SHALL NOT EXCEED 6 1/2". DOUBLE COPE LENGTHS SHALL NOT EXCEED THAT REQUIRED TO ACCOMMODATE GIRDER FLANGE + 1/2" MAX GAP BETWEEN FLANGES.
10. UNCOPED CAPACITIES OF WT CONNECTIONS ARE VALID WITH MINIMUM NOMINAL HSS COLUMN WALL TABULATED THICKNESS. THE EFFECTIVE THROAT OF FLARE BEVEL GROOVE WELDS IS BASED ON OUTSIDE RADIUS OF HSS, AND IS TAKEN AS 5/8 TIMES THE HSS WALL THICKNESS BASED ON AWS D1.1, TABLE 2.1. WHEN 3/4" A325-N BOLTS ARE USED, A 3/16" HSS COLUMN WALL THICKNESS IS PERMITTED WITH A 20% REDUCTION OF THE WT CONNECTION CAPACITY.
11. NR = NOT RECOMMENDED. DOUBLE COPES FOR THESE BEAMS ARE RESTRICTED BY CONNECTION GEOMETRY AND/OR LARGE REDUCTIONS IN SHEAR CAPACITY. DOUBLE COPES ARE POSSIBLE, BUT CAPACITIES MUST BE CALCULATED FOR SPECIFIC BEAM AND GIRDER GEOMETRIES AND MUST BE DETAILED SEPARATELY.

TABLE 1 MINIMUM WELD SIZE TABLE	
PLATE OR FLANGE THICKNESS (T) *	MINIMUM FILLET SIZE
T ≤ 1/2"	3/16"
1/2" < T ≤ 3/4"	1/4"
3/4" < T	5/16"

* MINIMUM WELD SIZE TO BE BASED ON THICKNESS OF THE THICKER PART.

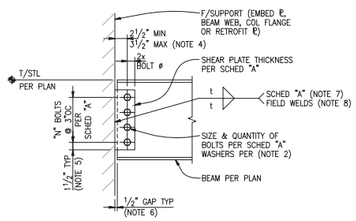

TYPICAL SHEAR PLATE CONNECTION

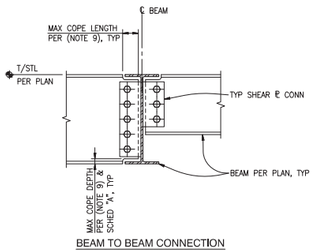

BEAM TO BEAM CONNECTION
SHEAR PLATE INFORMATION PER TYPICAL SHEAR PLATE CONNECTION.

SINGLE SHEAR PLATE (SINGLE ROW) CONNECTIONS

05201M

SCALE: 1"=1'-0" (10)

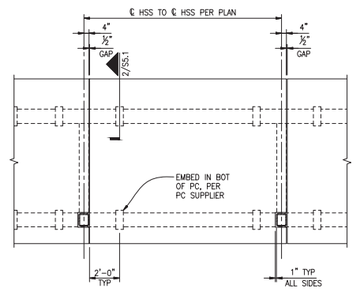

NOTE:
PROVIDE A MINIMUM OF (4) EMBEDS PER PRECAST PANEL.

TYPICAL PRECAST PANEL PLAN

SCALE: 1/4"=1'-0" (7)

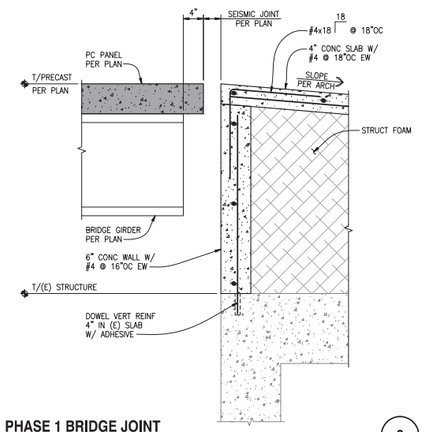

PHASE 1 BRIDGE JOINT

SCALE: 1"=1'-0" (8)

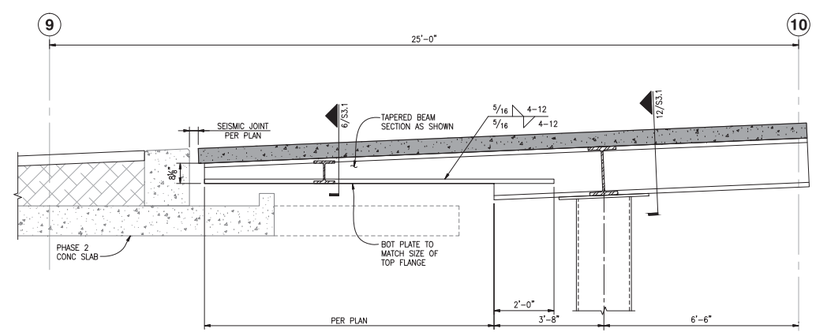

PHASE 2 BRIDGE JOINT

SCALE: 1/2"=1'-0" (12)

DCI ENGINEERS
601 W. RIVERSIDE • SUITE 600
SPOKANE, WASHINGTON 99201
PHONE: (509) 455-4448 • FAX: (509) 455-7892
WEBSITE: www.dci-engineers.com
CIVIL / STRUCTURAL

100% CD SUBMITTAL

STRUCTURAL DETAILS
CAMPUS BRIDGE
SPA ADA MODIFICATIONS

S5.1
13041-02.06
06.17.14
Revisions

DLR Group
Architecture Engineering Planning Interiors

© DLR Group inc., a Washington corporation, ALL RIGHTS RESERVED

17-Jun-14 1:24 PM jhancock
13041-02.06-S51.dwg

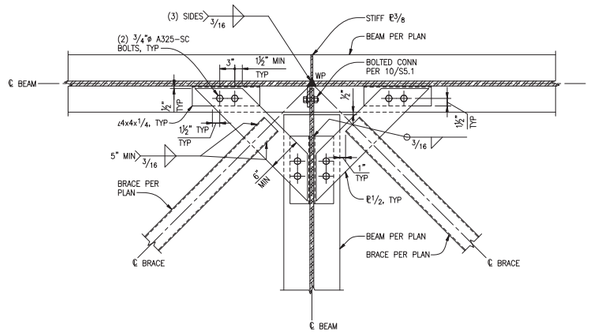

BRACE TO BEAM CONNECTION

SCALE: 1"=1'-0" (2)

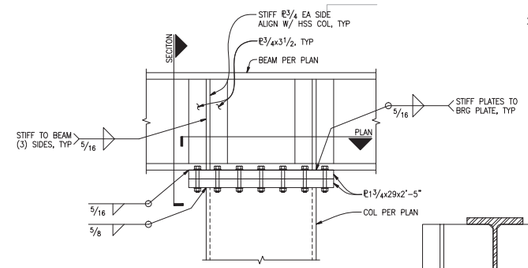

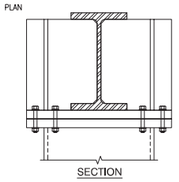

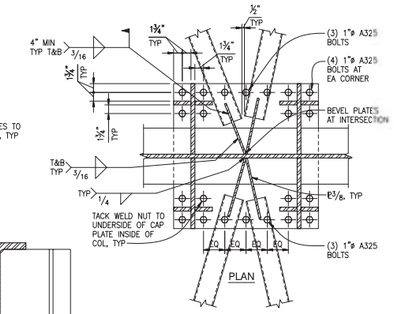

BRIDGE COLUMN/BEAM CONNECTION

SCALE: 1"=1'-0" (4)

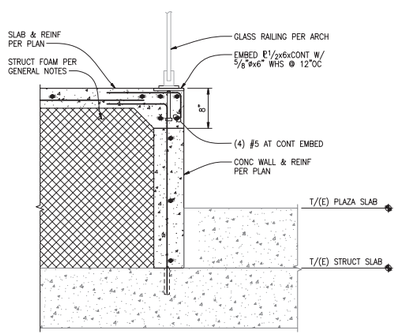

GLASS RAILING AT PLAZA SLAB

SCALE: 1"=1'-0" (5)

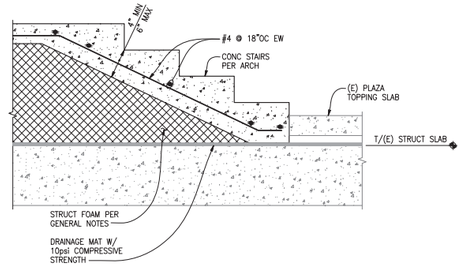

PLAZA SEAT WALL

SCALE: 1"=1'-0" (6)

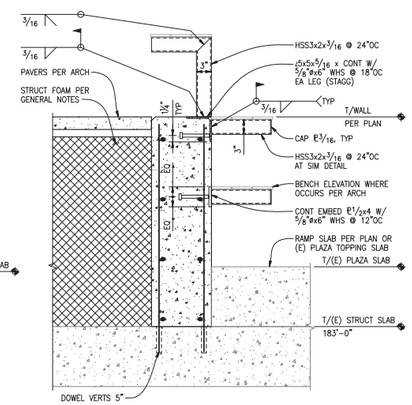

PLAZA SEAT WALL

SCALE: 1"=1'-0" (7)

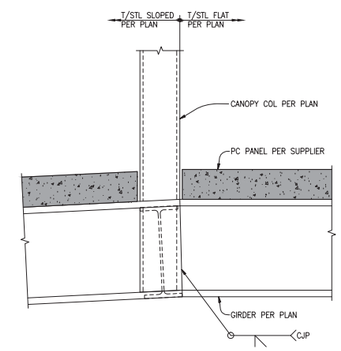

SLOPE TRANSITION

SCALE: 1"=1'-0" (8)

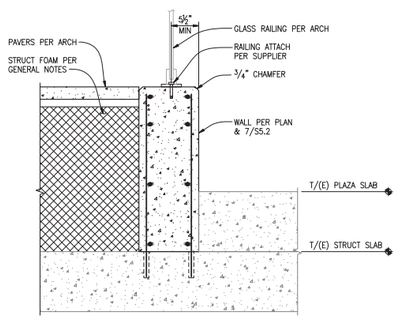

GLASS RAILING AT PLAZA PAVERS

SCALE: 1"=1'-0" (9)

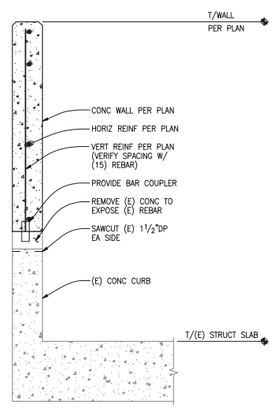

NEW CONCRETE RAILING WALL AT STAIRS

SCALE: 1"=1'-0" (10)

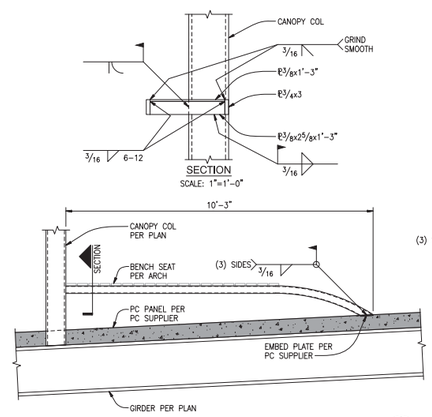

BRIDGE BENCH SEAT

SCALE: 1/2"=1'-0" (11)

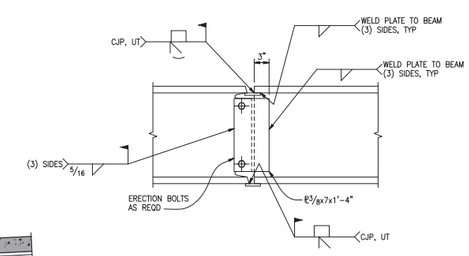

NOTE:
BACKING BARS NEED NOT BE REMOVED UNLESS NECESSARY TO PERFORM UT TESTING.

BRIDGE GIRDER FIELD SPLICE

SCALE: 1"=1'-0" (12)

DCI ENGINEERS
601 W. RIVERSIDE • SUITE 600
SPOKANE, WASHINGTON 99201
PHONE: (509) 455-4448 • FAX: (509) 455-7892
WEBSITE: www.dci-engineers.com
CIVIL / STRUCTURAL

© Copyright 2020/21 D'Annolo Conversano Inc. All Rights Reserved
This document and the ideas and designs deep can be copied in whole or in part only with the written permission of D'Annolo Conversano Inc. D'Annolo Conversano Inc. disclaims any responsibility for its unauthorized use.

100% CD SUBMITTAL

STRUCTURAL DETAILS
CAMPUS BRIDGE
SPA ADA MODIFICATIONS

S5.2
13041-0236
06.17.14
Revisions

DLR Group
Architecture Engineering Planning Interiors

© DLR Group inc., a Washington corporation, ALL RIGHTS RESERVED

13041-0236-S52.dwg 17-Jun-14 1:03 PM jhancock

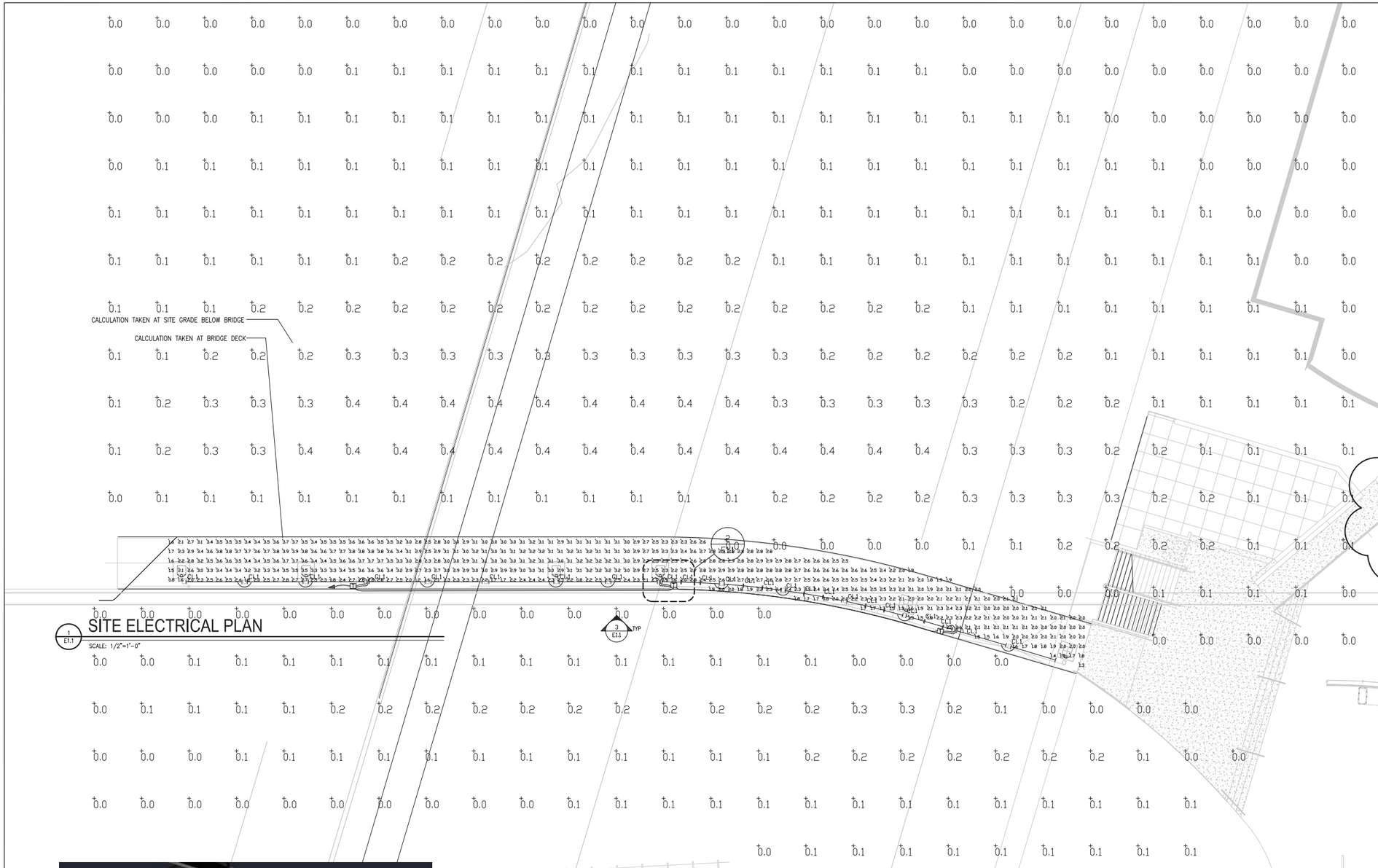

1 E1.1 SITE ELECTRICAL PLAN

SCALE: 1/2"=1'-0"

GENERAL NOTES:

1. ALL EQUIPMENT, DEVICES & LIGHTING FIXTURES SHOWN ARE NEW UNLESS NOTED OTHERWISE.

KEY NOTES:

1. LIGHT FIXTURE: WINONA 209W SERIES, WET LISTED LED LINEAR STRIP LIGHT, 282LM/FT, 6.2W/FT, 3000K CCT, 30 DEGREE OPTIC, 24V AC OR EQUAL. PROVIDE WITH 500W MULTITAP TRASNFORMER: WINONA TQ SERIES OR EQUAL.

PHOTOMETRIC NOTES:

AVG:	2.56FC
MAX:	3.90FC
MIN:	0.80FC
AVG/MIN:	3.20
MAX/MIN:	4.88

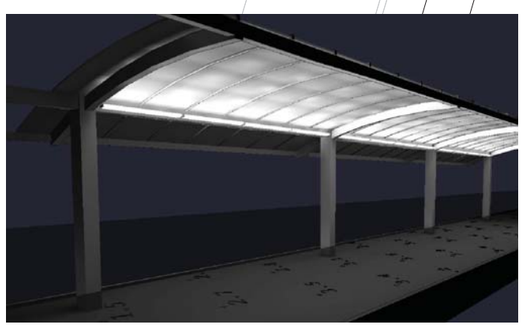

4 E1.1 BRIDGE LIGHTING RENDERING

SCALE: NTS

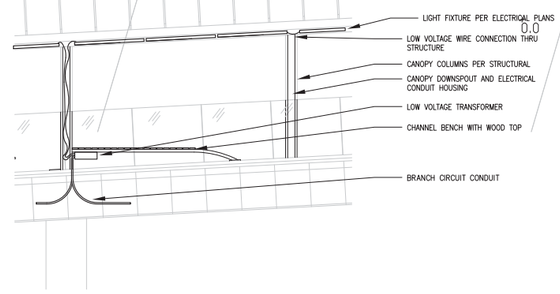

3 E1.1 TYPICAL BRIDGE ELECTRICAL ELEVATION

SCALE: 1/2"=1'-0"

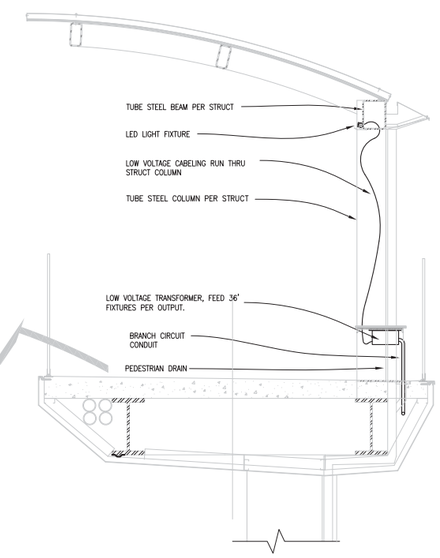

2 E1.1 TYPICAL BRIDGE ELECTRICAL DETAIL

SCALE: 1"=1'-0"

100% CD SUBMITTAL

ELECTRICAL FLOOR PLANS
CAMPUS BRIDGE

E1.1
73-12144-01
04.29.14

DLR Group
Architecture Engineering Planning Interiors

© 2012, DLR Group Inc., a Washington corporation, ALL RIGHTS RESERVED.

P:\73-12144-01\Dwg\E1\12-1114.dwg
Oct 13, 2014 9:25am - rcook

After recording, return to:

Brent Carson
Van Ness Feldman LLP
719 Second Avenue, Suite 1150
Seattle, Washington 98104-1728

CONFORMED COPY

20131023001103
VAN NESS FELDM AG-RER 90.00
PAGE-001 OF 018
10/23/2013 14:43

WASHINGTON STATE RECORDER'S Cover Sheet (RCW 65.04)

DOCUMENT TITLE(S) (or transactions contained therein):

CROSS KIRKLAND CORRIDOR IMPROVEMENT AND USE AGREEMENT

REFERENCE NUMBER(S) OF DOCUMENTS ASSIGNED OR RELEASED:

n/a
☐ Additional reference #s on page ___ of document(s)

GRANTOR(S) (Last name first, then first name and initials)

City of Kirkland, a non-charter, optional code Washington municipal corporation

☐ Additional names on page ___ of document

GRANTEE(S) (Last name first, then first name and initials)

SRMKII, LLC, a Washington limited liability company
SRMKJVD, LLC, a Delaware limited liability company
☐ Additional names on page ___ of document

LEGAL DESCRIPTION (abbreviated: i.e., lot, block, plat or section, township, range)

Section 8, Township 25 North, Range 5 East, WM, King County, Washington

☒ Additional legal is on pages 14-18 of document

ASSESSOR'S PROPERTY TAX PARCEL/ACCOUNT NUMBERS

788260-0120; 788260-01750; 788260-0180; 82505-9059

☐ Assessor Tax # not yet assigned

CROSS KIRKLAND CORRIDOR IMPROVEMENT AND USE AGREEMENT BETWEEN THE CITY OF KIRKLAND, SRMKII LLC AND SRMKJVD LLC

THIS CROSS KIRKLAND CORRIDOR IMPROVEMENT AND USE AGREEMENT ("Agreement") is made and entered into this ___ day of _____, 2013 (the "Effective Date"), by and among the CITY OF KIRKLAND ("City"), a non-charter, optional code Washington municipal corporation, SRMKII, LLC, a Washington limited liability company ("SRM") and SRMKJVD, LLC, a Delaware limited liability company (the "Phase I Owner").

I. RECITALS

A. The Phase I Owner is the owner of that real property (the "Phase I Property") legally described in Exhibit A attached hereto and incorporated herein by this reference, located immediately adjacent to and on the east side of the Cross Kirkland Corridor ("CKC"). The Phase I Property is currently occupied by office buildings currently leased to Google, Inc. (the "Phase I Buildings").

B. SRM is the contract purchaser of that real property (the "Phase II Property") legally described in Exhibit B attached hereto and incorporated herein by this reference, located immediately adjacent to and on the west side of the CKC across from the Phase I Property. SRM is developing a new office building on the Phase II Property at the former Pace Chemical Site on which to locate additional office buildings to lease to Google, Inc. (the "Development").

C. The City owns the CKC. The CKC is legally described in Exhibit C attached hereto and incorporated herein by this reference.

D. SRM, the Phase I Owner and the City share the goal of developing the CKC in a way that serves the needs of SRM, the Phase I Owner and their tenants in the Phase I Buildings and in the proposed Development while preserving and enhancing the City's vision and interests in developing the CKC for recreational and transportation uses.

E. As a part of the Development, SRM wishes to construct three crossings of the CKC to benefit the Phase I Property and the Phase II Property. One crossing would be at-grade to provide vehicular access across the CKC at a location near the south end of the Phase I Buildings. Another crossing would be an aerial bridge to provide pedestrian access, public and private utilities and other amenities over and across the CKC at a location near the separation of the Phase I Buildings. A third crossing would be at-grade for pedestrian access located under the aerial crossing. SRM is also seeking termination of a City-owned easement that burdens the Phase II Property.

D. In exchange for the right to construct the three crossing and the termination of the City-owned easement, SRM intends to develop the portion of the CKC adjacent to both the Phase I Property and Phase II Property (the "Adjacent CKC") with public improvements including a paved bicycle and pedestrian trail facility, lighting and other public improvements and other mutually agreed upon considerations for the City.

E. This Agreement must be approved by ordinance or resolution prior to the City entering into it.

NOW, THEREFORE, in consideration of the mutual promises set forth herein and the long-term benefit to the City, SRM and the Phase I Owner, the parties hereby agree as follows:

II. AGREEMENT

1. **CKC Improvements.** SRM shall construct a thirty foot (30') wide trail corridor with a paved bicycle and pedestrian trail approximately seven hundred (700') feet in length through the Adjacent CKC. The trail corridor may meander onto the adjacent Phase II Property so long as the City is granted an easement upon mutually acceptable terms. The trail corridor shall cross the Road Crossing, as hereinafter described and defined, at the same grade as the Road Crossing and with specific safety measures installed, such as signage, striping, and lighting. SRM shall also construct a mutually agreed number of public improvements, such as sport courts, play areas and other public amenities on the Adjacent CKC. In addition, SRM shall design and install lighting improvements on the Adjacent CKC. The trail corridor, bicycle and pedestrian trail, sport courts, play areas, lighting and other public amenities are hereinafter collectively referred to as the "Public Improvements." SRM shall prepare a plan depicting all of the Public Improvements (the "Public Improvement Plan") for review and approval by the City. The design, installation and construction of the Public Improvements shall be consistent with the approved Public Improvement Plan, comply with all applicable City regulations and conform to City approved standards, guidelines and policies ("City Design Standards"). SRM shall obtain all required permits from the City for installation of the Public Improvements.

2. **CKC Crossings.** The City hereby grants a non-exclusive easement to SRM and to the Phase I Owner to construct, install, maintain, repair and replace three crossings of the CKC: (1) one at-grade road crossing across the Adjacent CKC at a location near the south end of the Phase I Buildings (the "Road Crossing"); (2) one aerial crossing of the CKC for pedestrians, public and private utilities, and other amenities over and across the Adjacent CKC at a location near the separation of the Phase I Buildings (the "Aerial Crossing"); and (3) one at-grade pedestrian crossing across the Adjacent CKC under the Aerial Crossing (the "Pedestrian Crossing"). In addition, the City hereby grants a non-exclusive easement to SRM and to the Phase I Owner to install, maintain, repair and replace supports and related infrastructure for the Aerial Crossing. The Road Crossing, Aerial Crossing, and Pedestrian Crossing are all collectively referred to herein as the "Crossing Improvements." If SRM elects to construct the Crossing Improvements, SRM shall prepare a plan depicting the

proposed Crossing Improvements (the "Crossing Plan") for review and approval by the City. The design, installation and construction of the Crossing Improvements shall be consistent with the approved Crossing Plan, comply with all applicable City regulations and conform to City approved standards, guidelines and policies ("City Design Standards"). SRM shall obtain all required permits from the City for installation of the Crossing Improvements. This Agreement does not obligate SRM to construct the Crossing Improvements.

3. **Use of CKC Crossings.** The parties agree that the Crossings Improvements shall be for the exclusive use of SRM and the Phase I Owner and their employees, agents, guests, and tenants; the employees, agents and guests of tenants occupying the Phase I Property and Phase II Property; and their successors and assigns, provided that City personnel may use the Crossing Improvements for emergency or public safety purposes; and provided further that exclusive use of the Crossing Improvements by SRM and the Phase I Owner shall not impair the public's right to use the Public Improvements.

4. **Railbanked Status of CKC.** The parties understand and acknowledge that the CKC is a railbanked rail corridor under federal law (16 U.S.C. 1247(d)) and subject to reactivation for freight rail use. In addition, the parties understand and acknowledge that the CKC is a potential transit corridor. SRM shall design and construct the Crossings Improvements to accommodate possible future use of the CKC for freight rail as follows. The Road Crossing shall be designed to accommodate crossing gates in the future. In the event the CKC is used for transit or freight rail purposes and it is determined by the City that crossing gates are necessary to protect public safety, SRM agrees to install crossing gates at the Road Crossing. The Aerial Crossing shall be designed to accommodate transit use. In the event that the CKC is used for freight rail purposes SRM agrees to remove all improvements associated with the Aerial Crossing or to construct the Aerial Crossing to accommodate freight rail use. In the event that the CKC is used for transit or freight rail purposes, SRM agrees to remove all improvements associated with the Pedestrian Crossing.

5. **Reservation of Transit Corridor.** The easternmost forty feet (40') of the Adjacent Corridor shall remain available for possible future transit use. This reservation shall not limit or prevent construction of the Public Improvements or the Crossing Improvements, but may result in the removal or modification of certain Public Improvements by the City in the future as it deems necessary to accommodate such transit use, and may result in removal or modification of certain Crossing Improvements as required by Paragraph 4.

6. **Termination of Existing Rail Easement.** Within 60 days of the execution of this Agreement, the City shall record a document terminating the existing 20 foot rail easement on the eastern portion of the Phase II Property (King County Recording No. 5034060).

7. **Trail Use during Construction of Improvements.** The Adjacent CKC shall remain open to the public for trail use at all times; provided that, to the extent reasonably necessary, SRM may limit public access during construction and maintenance of the Public

Improvements and Crossing Improvements. If restriction of public access is required, SRM shall to the extent reasonable, provide a detour route around the construction area.

8. Public Access. Upon completion of construction, all Public Improvements shall be open to the public subject to terms and conditions that may be established by the City. Access to the Crossing Improvements shall be limited as set forth in Paragraph 3.

9. Maintenance of Public Improvements. Unless otherwise agreed to by the City, SRM and the Phase I Owner, SRM shall maintain all Public Improvements in the Adjacent CKC, except for the bicycle and pedestrian trail, which shall be maintained by the City.

10. Coordination with Existing Sound Transit Easement. SRM and the City understand and acknowledge that Central Puget Sound Regional Transit Authority ("Sound Transit") holds a High Capacity Transportation Easement (King County Recording No. 20120411001174, "Sound Transit Easement") over the Eastside Rail Corridor, including the Adjacent CKC. Pursuant to the Sound Transit Easement and prior to installing the two crossings in the Adjacent CKC, SRM shall provide preliminary design plans and other information required under the Sound Transit Easement to Sound Transit and shall provide Sound Transit with a reasonable opportunity for review and comment. SRM shall satisfy all comments received from Sound Transit prior to commencing construction activities on the Adjacent CKC.

11. Coordination with Existing PSE Easement. SRM and the City understand and acknowledge that Puget Sound Energy, Inc. ("PSE") holds a South Rail Line Easement (King County Recording No. 20101221000998, "PSE Easement") over the Eastside Rail Corridor, including the Adjacent CKC. Pursuant to the PSE Easement, and prior to installing the two crossings in the Adjacent CKC, SRM shall notify PSE of its proposed construction, provide construction plans, survey data and other information to PSE, and shall provide PSE with a reasonable opportunity for review and comment. SRM shall satisfy all comments received from PSE prior to commencing construction activities on the Adjacent CKC.

12. Indemnification.

12.1. Recreational Land Use. The parties anticipate that public use of the Adjacent CKC will be subject to the Recreational Land Use Statute, RCW 4.24.200 and 4.24.210.

12.2. Indemnification for Construction Activities. SRM shall indemnify, defend and hold the City of Kirkland and its officers, agents and employees harmless from all costs, claims or liabilities of any nature, including attorney's fees, costs and expenses for or on account of injuries or damages sustained by any persons or property resulting from the Adjacent CKC construction activities of SRM, its agents, employees or contractors, or on account of any unpaid wages or other remuneration for services. If a suit arising out of or in any way relating to the Adjacent CKC construction activities is filed against the City of

Kirkland and its officers, agents or employees, SRM shall appear and defend the same at its own cost and expense, and if judgment be rendered or settlement be made requiring payment by the City, SRM shall pay the same. Notwithstanding anything to the contrary in this Agreement, SRM shall not be responsible for, or indemnify or defend the City against any claims, causes of action, losses, damages, liabilities, costs or expenses caused by or resulting from the City Design Standards or the negligence of the City, its agents, contractors or employees.

12.3. Indemnification for Use of Adjacent CKC. SRM shall indemnify, defend and hold the City of Kirkland and its officers, agents and employees harmless from all costs, claims or liabilities of any nature, including attorney's fees, costs and expenses for or on account of injuries or damages sustained by any persons or property resulting from SRM maintained Public Improvements or the Crossings Improvements. If a suit arising out of or in any way relating to use of the SRM maintained Public Improvements or the CKC crossings is filed against the City of Kirkland and its officers, agents or employees, SRM shall appear and defend the same at its own cost and expense, and if judgment be rendered or settlement be made requiring payment by the City, SRM shall pay the same. Notwithstanding anything to the contrary in this Agreement, SRM shall not be responsible for, or indemnify or defend the City against any claims, causes of action, losses, damages, liabilities, costs or expenses caused by the City Design Standards or the negligence of the City, its agents, contractors or employees.

The City shall indemnify, defend and hold SRM and its officers, agents and employees harmless from all costs, claims or liabilities of any nature, including attorney's fees, costs and expenses for or on account of injuries or damages sustained by any persons or property resulting from City Design Standards or the use of the City maintained Public Improvements. If a suit arising out of or in any way relating to the City Design Standards or use of City maintained Public Improvements is filed against SRM and its officers, agents or employees, the City shall appear and defend the same at its own cost and expense, and if judgment be rendered or settlement be made requiring payment by SRM, the City shall pay the same. Notwithstanding anything to the contrary in this Agreement, the City shall not be responsible for, or indemnify or defend the SRM against any claims, causes of action, losses, damages, liabilities, costs or expenses caused by or resulting from the negligence of SRM, its agents, contractors or employees.

13. <u>Removal of Existing Rails.</u> The City shall remove the existing rails, ties and related equipment on the Adjacent CKC no later than June 30, 2014, provided it is legally able to do so. The parties acknowledge that the City is participating in proceedings before the federal Surface Transportation Board ("STB") in which Ballard Terminal Railroad Company, LLC ("Ballard") is seeking to reactivate the portion of the railbanked Eastside Rail Corridor extending from Woodinville south to Bellevue (and including the Adjacent CKC) for freight rail service (See STB Docket No. AB-6 (Sub-No. 465X) and STB Finance Docket No. 35731, collectively the "STB Action"). As part of the STB Action, Ballard is seeking a preliminary injunction to enjoin removal of the rails. The parties to this Agreement understand and acknowledge that the City's ability to remove the existing rails may be affected by the

pending STB action or other legal proceedings involving the rails. In the event the City is legally unable to remove the existing rails, ties and related equipment on the Adjacent CKC, SRM may proceed with construction of the Crossing Improvements, except that the City may require SRM to design the Crossing Improvements in accordance with Paragraph 4 for freight rail use of the CKC, and SRM may proceed with the Public Improvements except that the City may require SRM to defer installation of certain Public Improvements.

14. Utility Relocation. SRM shall pay all costs and obtain all required approvals for relocation of existing utilities in connection with SRM's construction and installation of the Public Improvements and the Crossings Improvements.

15. Coordination of Trail Corridor Construction. The parties acknowledge that the City will, at its cost, undertake construction of an interim trail along the length of the CKC. Under current City estimates, such construction would occur in 2014, with a permanent trail to be installed thereafter. The City and SRM agree to coordinate construction schedules with respect to the trail corridor in the Adjacent CKC to avoid duplication of efforts and maximize efficient use of resources by the City and SRM.

16. Grading and Fill. SRM may, with the prior approval of the City, place fill on the Adjacent CKC for the purpose of constructing the Public Improvements and for transitioning the final grade of the Phase II Property Development. SRM and the City anticipate that filling and grading activity will occur pursuant to a Land Surface Modification Permit issued by the City.

17. Discharge of Stormwater. SRM will be permitted to discharge stormwater from the Development into the City's storm drainage facilities. SRM and the City anticipate that connections to the City's storm drainage facilities will occur pursuant to a permit issued by the City's Public Works Department.

18. Tie-Back Agreement. The City and SRM shall enter a Tie-Back Agreement to allow temporary soil nails for the purpose of shoring on the western edge of the Adjacent CKC and the northern property line of the Development.

19. Transportation Impact Fees. To the extent permitted by Washington law, the City may use transportation impact fees from the Development for Public Improvements to the CKC, Improvements to Fifth Street and any signalization related to the Development.

20. Default and Termination. In the event SRM or the City fails to perform any obligation of this Agreement for a period of thirty (30) days after notice from the other, that party shall be in default; provided, however, that neither party will be default under this Agreement if it commences curing such default within such 30-day period and thereafter diligently prosecutes the cure to completion. In the event of default by either party, the other shall be entitled to terminate or to specifically enforce the terms of this Agreement.

This Agreement shall automatically terminate and no longer be in force and effect on the later of the following two events: 1) thirty (30) years from the Effective Date; or 2) one

(1) year after the Development and the Phase I Buildings cease to be used as an integrated campus with a significant national tenant occupying portions of both the Development and Phase I Buildings.

21. **Dispute Resolution Process**. The parties shall use their best efforts to resolve disputes arising out of or related to this Agreement using good faith negotiations. If the dispute cannot be settled through negotiation, the parties agree first to try in good faith to settle the dispute through non-binding mediation before resorting to litigation. The fees for mediation will be borne equally by the parties.

22. **Modifications to Agreement**. This Agreement contains all terms, conditions and provisions agreed upon by the parties hereto, and shall not be modified except by written amendment executed by both parties. Amendments to this Agreement that materially modify the intent and policy of the Agreement must be approved by the City Council. Other amendments may be approved by the City Manager.

23. **Hazardous or Dangerous Waste**. In the event that SRM discovers Hazardous or Dangerous Waste on the CKC during construction of Public Improvements or Crossing Improvements, SRM shall notify the City. SRM and the City agree to share equally any increased marginal costs associated with the management, testing, treatment and disposal of such waste.

24. **General Provisions.**

24.1 Governing Law. This Agreement shall be governed by and interpreted in accordance with the laws of the State of Washington.

24.2 Recording. A memorandum of this Agreement shall be recorded against the Development as a covenant running with the land and shall be binding on the parties, their heirs, successors and assigns.

24.3 Agreement Binding on Successors and Assigns. This Agreement shall be binding upon and shall inure to the benefit of the heirs, successors and assigns of the City, SRM, and the Phase I Owner except as limited and conditioned in this Agreement.

24.4 Severability. If any provision of this Agreement is determined to be unenforceable or invalid in a final decree or judgment by a court of law, then the remainder of this Agreement not decreed or adjudged unenforceable or invalid shall remain unaffected and in full force and effect. In that event, this Agreement shall thereafter be modified, as provided immediately hereafter, to implement the intent of the parties to the maximum extent allowable under law. The parties shall diligently seek to agree to modify the Agreement consistent with the final court determination, and no party shall undertake any actions inconsistent with the intent of this Agreement until the modification to this Agreement has been completed. If the parties do not mutually agree to modifications within forty-five (45) days after the final court determination, then either party may initiate the mediation process under Section 19 for

determination of the modifications that will implement the intent of this Agreement and the final court decision.

24.5 Authority. Each party respectively represents and warrants that it has the power and authority, and is duly authorized, to enter into this Agreement on the terms and conditions herein stated, and to deliver and perform its obligations under this Agreement.

24.6 Entire Agreement. This Agreement represents the entire agreement of the parties with respect to the subject matter hereof. There are no other agreements, oral or written, except as expressly set forth herein and this Agreement supersedes all previous agreements, oral or written.

24.7 Default and Remedies. No party shall be in default under this Agreement unless it has failed to perform as required under this Agreement for a period of thirty (30) days after written notice of default from any other party. Each notice of default shall specify the nature of the alleged default and the manner in which the default may be cured satisfactorily. If the nature of the alleged default is such that it cannot be reasonably cured within the thirty (30) day period, then commencement of the cure within such time period and the diligent prosecution to completion of the cure shall be deemed a cure. In any action to enforce or determine a party's rights under this Agreement, the prevailing party shall be entitled to attorney's fees and costs.

24.8 No Third-Party Beneficiary. This Agreement is made and entered into for the sole protection and benefit of the parties hereto and their successors and assigns. No other person shall have any right of action based upon any provision of this Agreement.

24.9 Interpretation. This Agreement has been reviewed and revised by legal counsel for all parties, and no presumption or rule construing ambiguity against the drafter of the document shall apply to the interpretation or enforcement of this Agreement.

24.10 Notice. All communications, notices, and demands of any kind that a party under this Agreement requires or desires to give to any other party shall be in writing and either (i) delivered personally, (ii) sent by facsimile transmission with an additional copy mailed first class, or (iii) deposited in the U.S. mail, certified mail postage prepaid, return receipt requested, and addressed as follows:

If to the City:

City Manager
City of Kirkland
123 5th Ave.
Kirkland WA, 98033

If to SRM:

SRMKII, LLC

111 N. Post, Suite 200
Spokane, WA 99201

If to Phase I Owner:

SRMKJVD, LLC
111 N. Post, Suite 200
Spokane, WA 99201

Notice by hand delivery or facsimile shall be effective upon receipt, provided that notice by facsimile shall be accompanied by mailed notice as set forth herein and shall be evidenced by a machine-printed confirmation of successful transmission. If deposited in the mail, certified mail, return receipt requested, notice shall be deemed delivered forty-eight (48) hours after deposited. Any party at any time by notice to the other party may designate a different address or person to which such notice or communication shall be given.

24.11 Delays. If either party is delayed in the performance of its obligations under this Agreement due to Force Majeure, then performance of those obligations shall be excused for the period of delay. For purposes of this Agreement, economic downturns, loss in value of assets, inability to obtain or retain financing, do not constitute a force majeure event.

24.12 Counterparts. This Agreement may be executed in any number of counterparts, each of which shall be effective only upon delivery and thereafter shall be deemed an original, and all of which shall be taken to be one and the same Agreement, for the same effect as if all parties hereto had signed the same signature page. Any signature page of this Agreement may be detached from any counterpart of this Agreement without impairing the legal effect of any signatures thereon and may be attached to another counterpart of this Agreement identical in form hereto but having attached to it one or more additional signature pages.

In Witness Whereof, the parties have caused this Agreement to be executed, effective on the day and year set forth on the first page hereof.

CITY OF KIRKLAND, a Washington municipal corporation

By: Kurt Triplett
Kurt Triplett, City Manager
Date: 8/8/13

State of Washington)
) ss.
County of King)

I certify that I know or have satisfactory evidence that Kurt Triplett is the person who appeared before me, and said person acknowledged that (he/she) signed this instrument, on oath stated that (he/she) was authorized to execute the instrument and acknowledged it as the City Manager of the City of Kirkland to be the free and voluntary act of such party for the uses and purposes mentioned in the instrument.

Dated: 8-8-13

Oskar Rey
(Signature)
Notary Public
My appointment expires 1-25-16

OSKAR E. REY
COMMISSION EXPIRES
NOTARY
PUBLIC
01-25-2016
STATE OF WASHINGTON

CITY OF KIRKLAND, a Washington municipal corporation

By: Kurt Triplett
Kurt Triplett, City Manager
Date: 8/8/13

State of Washington)
) ss.
County of King)

I certify that I know or have satisfactory evidence that Kurt Triplett is the person who appeared before me, and said person acknowledged that (he/she) signed this instrument, on oath stated that (he/she) was authorized to execute the instrument and acknowledged it as the City Manager of the City of Kirkland to be the free and voluntary act of such party for the uses and purposes mentioned in the instrument.

Dated: 8-8-13

Oskar Rey
(Signature)
Notary Public
My appointment expires 1-25-16

OSKAR E. REY
COMMISSION EXPIRES
NOTARY
PUBLIC
01-25-2016
STATE OF WASHINGTON

SRMKII, LLC, a Washington limited liability company

By: SRM Development, LLC
Its: Manager

By: _____
Its: Authorized Member
Date: 10/21/13

State of Washington)
) ss.
County of ~~King~~ Spokane

I certify that I know or have satisfactory evidence that Bryan Stone is the person who appeared before me, and said person acknowledged that (he/she) signed this instrument, on oath stated that (he/she) was authorized to execute the instrument and acknowledged it as the Authorized Member of SRM Development, LLC, the Manager of SRMKII, LLC, to be the free and voluntary act of such party for the uses and purposes mentioned in the instrument.

Dated: 10/21/13

_____
(Signature)
Notary Public
My appointment expires 10-21-14

SRMKJVD, LLC, a Delaware limited liability company

By: SRM Development, LLC
Its: Manager

By: _____
Its: Authorized Member
Date: 10/21/13

State of Washington)
) ss.
County of ~~King~~ Spokane)

I certify that I know or have satisfactory evidence that Bryan Stone is the person who appeared before me, and said person acknowledged that (he/she) signed this instrument, on oath stated that (he/she) was authorized to execute the instrument and acknowledged it as the Authorized Member of SRM Development, LLC, the Manager of SRMKJVD, LLC, to be the free and voluntary act of such party for the uses and purposes mentioned in the instrument.

Dated: 10/21/13

Kaelynn R. Cunningham
(Signature)
Notary Public
My appointment expires 10-21-14

Exhibit A
Phase I Property Legal Description

PARCEL A:

THAT PORTION OF TRACTS 18, 19, AND 20, SOUTH KIRKLAND ACREAGE, ACCORDING TO THE PLAT THEREOF, RECORDED IN VOLUME 11 OF PLATS, PAGE 94, IN KING COUNTY, WASHINGTON, MORE PARTICULARLY DESCRIBED AS FOLLOWS:
BEGINNING AT THE SOUTH QUARTER CORNER OF SECTION 8, TOWNSHIP 25 NORTH, RANGE 5 EAST, WILLAMETTE MERIDIAN, IN KING COUNTY, WASHINGTON;
THENCE NORTH 0°35'10" EAST ALONG THE NORTH-SOUTH CENTERLINE OF SAID SECTION A DISTANCE OF 2,611.93 FEET TO A POINT 0.23 FEET EAST OF AN EXISTING PUNCH MARK IN A LEAD PLUG IN THE NORTHEASTERLY RIM OF A SEWER MANHOLE;
THENCE CONTINUING NORTH 0°35'10" EAST 179.47 FEET TO THE TRUE POINT OF BEGINNING; THENCE CONTINUING NORTH 0°35'10" EAST 300.00 FEET;
THENCE NORTH 89°24'50" WEST 180.00 FEET;
THENCE SOUTH 0°35'10" WEST 300.00 FEET;
THENCE SOUTH 89°24'50" EAST 180.00 FEET TO THE TRUE POINT OF BEGINNING;
EXCEPT THE EAST 30.00 FEET THEREOF; ALSO
EXCEPT THAT PORTION THEREOF CONVEYED TO THE CITY OF KIRKLAND BY STATUTORY WARRANTY DEED RECORDED UNDER RECORDING NUMBER 20070330002629.

PARCEL B:

TRACTS 18, 19, 20, AND 21, SOUTH KIRKLAND ACREAGE, ACCORDING TO THE PLAT THEREOF, RECORDED IN VOLUME 11 OF PLATS, PAGE 94, IN KING COUNTY, WASHINGTON;
EXCEPT THAT PORTION OF SAID TRACTS 18, 19, AND 20 INCLUDED WITHIN THE FOLLOWING DESCRIPTION:
BEGINNING AT THE SOUTH QUARTER CORNER OF SECTION 8, TOWNSHIP 25 NORTH, RANGE 5 EAST, WILLAMETTE MERIDIAN, IN KING COUNTY, WASHINGTON;
THENCE NORTH 0°35'10" EAST ALONG THE NORTH-SOUTH CENTERLINE OF SAID SECTION A DISTANCE OF 2,611.93 FEET TO A POINT 0.23 FEET EAST OF AN EXISTING PUNCH MARK IN A LEAD PLUG IN THE NORTHEASTERLY RIM OF A SEWER MANHOLE;
THENCE CONTINUING NORTH 0°35'10" EAST 179.47 FEET TO THE TRUE POINT OF BEGINNING; THENCE CONTINUING NORTH 0°35'10" EAST 300.00 FEET;
THENCE NORTH 89°24'50" WEST 180.00 FEET;
THENCE SOUTH 0°35'10" WEST 300.00 FEET;
THENCE SOUTH 89°24'50" EAST 180.00 FEET TO THE TRUE POINT OF BEGINNING; ALSO
EXCEPT THAT PORTION OF SAID TRACT 18 LYING SOUTH OF A LINE DESCRIBED AS FOLLOWS:
BEGINNING AT THE SOUTHEAST CORNER OF SAID TRACT;
THENCE NORTH 88°54'50" WEST 397.88 FEET;
THENCE NORTH 72°05'50" WEST 132 FEET TO THE EASTERLY MARGIN OF NORTHERN PACIFIC RAILWAY COMPANY RIGHT OF WAY AND THE END OF THE LINE DESCRIBED;
ALSO EXCEPT THAT PORTION THEREOF CONVEYED TO THE CITY OF KIRKLAND BY STATUTORY WARRANTY DEED RECORDED UNDER RECORDING NUMBER 20070330002629.

Exhibit B
Phase II Property Legal Description

THAT PORTION OF LOT 12, LYING WEST OF NORTHERN PACIFIC RAILROAD COMPANY RIGHT-OF-WAY AS CONVEYED BY DEED RECORDED UNDER RECORDING NO. 267075 AND THAT PORTION OF LOTS 15 AND 16, LYING EAST OF A LINE WHICH IS THE SOUTHERLY EXTENSION OF THE WEST LINE OF SAID LOT 12 AS EXTENDED SOUTHERLY TO THE SOUTH LINE OF SAID LOT 16 AND ALSO LYING WEST OF THE SAID NORTHERN PACIFIC RAILROAD COMPANY RIGHT-OF-WAY, ALL IN SOUTH KIRKLAND ACREAGE, AS PER PLAT RECORDED IN VOLUME 11 OF PLATS, PAGE 94, RECORDS OF KING COUNTY;

EXCEPT THE NORTH 15 FEET OF THE WESTERLY 325 FEET THEREOF CONVEYED TO THE CITY OF KIRKLAND BY DEED RECORDED UNDER RECORDING NO. 7104230470;

SITUATE IN THE CITY OF KIRKLAND, COUNTY OF KING, STATE OF WASHINGTON.

Exhibit C
Cross Kirkland Corridor Legal Description

City Of Kirkland
Legal Description – Railroad Corridor

Triad Job Number 11-128
November 22, 2011
Revised December 06, 2011

That portion of Sections 5, 8, 17 and 20, Township 25 North, Range 5 East, W.M. and Sections 28, 32 and 33, Township 26 North, Range 5 East, W.M., in King County, Washington, lying within the eight (8) tracts of land described as follows:

Tract 1

That portion of that certain 100.0 foot wide Branch Line right of way, being 50.0 feet on each side of said Main Track centerline, as now located and constructed upon, over and across the S½,NE¼ and the NW¼,SE¼ and the SW¼ of Section 28, the W½,NW¼ and the NW¼,SW¼ of Section 33, the SE¼ of Section 32, all in Township 26 North, Range 5 East, W.M., bounded on the East by a line that is parallel with and 42.00 feet west of, when measured at right angles to, the centerline of 132nd Avenue NE (aka Slater Avenue NE or 132nd Place NE) as surveyed under King County Survey No. 28-26-5-19 and bounded on the South by South line of said SE¼ of Section 32, **EXCEPTING THEREFROM,** that certain tract of land described in Deed dated February 24, 1998 from The Burlington Northern and Santa Fe Railway Company to ANT, LLC recorded May 22, 1998 as Document No. 9805260805, records of King County, Washington; **ALSO EXCEPTING THEREFROM,** that certain tract of land described in Special Warranty Deed dated February 24, 1998 from The Burlington Northern and Santa Fe Railway Company to ANT, LLC recorded July 30, 1998 as Document No. 9807301468, records of King County, Washington, **ALSO EXCEPTING THEREFROM**, that certain tract of land described in Special Warranty Deed dated February 24, 1998 from The Burlington Northern and Santa Fe Railway Company to ANT, LLC recorded May 22, 1998 as Document No. 9805260791, records of King County, Washington, **ALSO EXCEPTING THEREFROM,** that certain tract of land described in Correction Quitclaim Deed dated January 6, 2000 from The Burlington Northern and Santa Fe Railway Company to ANT, LLC recorded February 11, 2000 as Document No. 20000211000454, records of King County, Washington;

Tract 2

That portion of that certain 100.0 foot wide Branch Line right of way in the City of Kirkland, Washington, being 50.0 feet on each side of said Main Track centerline, as now located and constructed, upon, over and across Blocks 3, 4, 5, 6, 11, 12, 13, 14, 18, 19, 23, 24, 25 and 26, the vacated alley between Blocks 13 and 14, and vacated Arlington Avenue between Blocks 14 and 19, as said Blocks and Streets are shown on plat of Lake Avenue Addition to Kirkland as recorded in Volume 6 of Plats, Page 86, Records of said King County, together with any right title and interest, if any to those portions of Victoria Avenue, Harrison Avenue, Moreton Avenue, Jefferson Avenue, and Washington Avenue and Maple Street and alleys within said Blocks which lie within said 100.0 feet wide Branch Line right of way, **EXCEPTING THEREFROM,** that portion of Lot 3; Block 5, Lake Avenue Addition to Kirkland, according to the official plat thereof in the office of the Auditor of King County, Washington lying between two lines drawn parallel with and distant, respectively, 34.0 feet and 50.0 feet Westerly of, as measured at right angles from The Burlington Northern and Santa Fe Railway Company's (formerly Northern Pacific Railway) Main Track centerline as now located and constructed upon, over, and across said Block 5;

Tract 3

That portion of that certain 100.0 foot wide Branch Line right of way in the City of Kirkland, Washington, being 50.0 feet on each side of said Main Track centerline, as now located and constructed, upon, over and across

Blocks 220, 223, 224, 232, 233, 238, and 241 as said Blocks are shown on the Supplementary Plat to Kirkland as filed in Volume 8 of Plats at Page 5, records of said King County, together with any right title and interest, if any to those portions of Massachusetts Avenue, Madison Avenue, Michigan Avenue, Olympia Avenue, Piccadilly Avenue, Cascade Avenue, Clarkson Avenue, Fir Street, and alleys within said Blocks which lie within said 100.0 foot wide Branch Line right of way;

Tract 4
That portion of Lots 1, 2, 4, 37, and all of Lots 3, 38, and 39, Block 227 as said Lots and Blocks are shown on the Supplementary Plat to Kirkland as filed in Volume 8 of Plats, at Page 5, records of said King County, which lie Northeasterly of a line parallel with and distant 50 feet Southwesterly from measured at right angles to said Railway Company's Main Track centerline as now located and constructed and Southwesterly of a line parallel with and distant 50 feet Northeasterly from, measured at right angle to said Railway Company's Main Track centerline as originally located and constructed;

Tract 5
That portion of that certain 100.0 foot wide Branch Line right of way, being 50.0 feet on each side of said Main Track centerline; as now located and constructed upon, over and across the SE¼,SE¼ of Section 5, NW¼,NE¼ and the E½,NW¼ and the E½,SW¼ of Section 8, all in Township 25 North, Range 5 East, W. M., bounded on the North by the South right of way line of Clarkson Avenue, City of Kirkland, Washington, and bounded on the West by the West line of said E½,SW¼ of Section 8, **EXCEPTING THEREFROM,** that certain tract of land described in Special Warranty Deed dated February 24, 1998 from The Burlington Northern and Santa Fe Railway Company to ANT, LLC recorded May 22, 1998 as Document No. 9805260787, records of King County, Washington, **ALSO EXCEPTING THEREFROM,** that certain tract of land described in Correction Quitclaim Deed dated May 15, 1999 from The Burlington Northern and Santa Fe Railway Company to ANT, LLC recorded August 5, 1999 as Document No. 19990805001402, records of King County, Washington, **ALSO EXCEPTING THEREFROM** that certain tract of land described in Deed dated February 24, 1998 from The Burlington Northern and Santa Fe Railway Company to ANT, LLC recorded July 28, 1998 as Document No. 9807281544, records of King County, Washington,

Tract 6
That certain 0.23 acre tract of land described in deed dated July 15, 1903 from Samuel F. French to Northern Pacific Railway Company recorded August 8, 1903 in Book 361 of Deeds, Page 249, records of King County, Washington, said 0.23 acre tract being described in said deed for reference as follows:

"Commencing at a point in the east line of Lot four (4), Section eight (8), Township twenty-five (25) North, Range five (5) east, W.M., that is 395 feet north of the southeast corner of said lot, and running thence west parallel with the south line of said Lot four (4) 67 feet, more or less, to a point that is 50 feet distant from, when measured at right angles to, the center line of the proposed Seattle Belt Line Branch of the Northern Pacific Railway Company as the same is now located, staked out and to be constructed across said Section eight (8); thence running northeasterly parallel with said railway center line 200 feet; thence westerly at right angles to said railway center line 30 feet; thence northeasterly parallel with said railway center line, and 80 feet distant therefrom, 130 feet, more or less, to the east line of said Lot four (4); thence south along said east line of said lot four (4) 322 feet, more or less, to the point of beginning; containing 0.23 acres, more or less.";

Tract 7
That certain strip of land described in deed dated March 3, 1904 from Seattle and Shanghai Investment Company to Northern Pacific Railroad Company recorded March 9, 1904 in Book 387, Page 243, records of King County, Washington, said strip being described in said deed for reference as follows:

"A strip of land Two Hundred twenty-five (225) feet in width across that certain parcel of land designated as Tract "B" in deed from the Kirkland Land and Improvement Company to H.A. Noble, dated July 13, 1899 of record in the Auditor's office of King County, Washington in Volume 245 of Deeds, at page 41, reference thereto being had. Said strip of land hereby conveyed, having for its boundaries two lines that are parallel with and respectively distant One Hundred (100) feet easterly from, and One Hundred Twenty-Five (125) feet westerly from, when measured at right angles to, the center line of the Seattle Belt Line branch of the NORTHERN PACIFIC RAILWAY COMPANY, as the same is now constructed and located across said Tract "B", which said Tract "B" is located in Section 17, Township 25 North, Range 5 East, Willamette Meridian";

Tract 8

That portion of that certain 100.0 foot wide Branch Line right of way, being 50.0 feet on each side of said Main Track centerline, as now located and constructed, upon, over and across Government Lot 4 of Section 8, Government Lots 1, 2, and 3 and the E½,SW¼ of Section 17, and the NE¼,NW¼ and the NE¼ of Section 20, all in Township 25 North, Range 5 East, W.M., bounded on the North by the South line of that certain herein above described 0.23 acre tract of land described in deed dated July 15, 1903 from Samuel F. French to Northern Pacific Railway Company recorded August 8, 1903 in Book 361 of Deeds, Page 249, records of King County, Washington and the East line of said Government Lot 4 of Section 8, and bounded on the South by the westerly margin of 108th Avenue NE as described in the Quit Claim Deed from State of Washington to the City of Bellevue recorded under Recording Number 9303190367, records of said King County, together with such additional widths as may be necessary to catch the slope of the fill in N½ of said Government Lot 2, Section 17 as delineated in the 7th described parcel in deed dated June 20, 1903 from Kirkland Land and Improvement Company to Northern Pacific Railway Company recorded June 26, 1903 in Book 352, Page 582, records of King County, Washington. **EXCEPTING THEREFROM,** that portion of said 100.0 foot wide right of way lying within said hereinabove described parcel of land designated as Tract "B" in deed from the Kirkland Land and Improvement Company to H.A. Noble dated July 13, 1899 of record in the Auditor's office of King County, Washington in Volume 245 of Deeds, at page 41.

(Tracts 1 – 8 being a portion of the parcel of land conveyed by BNSF Railroad Company to the Port of Seattle by Quit Claim Deed recorded under Recording Number 20091218001535, records of said King County.)

Geotechnical Engineering Report

Improvements in the Cross Kirkland Corridor
Google Campus Expansion
431 7th Avenue South
Kirkland, Washington

March 19, 2014
Terracon Project No. 81145002

Prepared for:
SRMKII, LLC
Kirkland, WA

Prepared by:
Terracon Consultants, Inc.
Mountlake Terrace, Washington

March 19, 2014

Terracon

SRMKII, LLC
720 6th Street South
Kirkland, WA 98033

Attention: Mr. Dave Tomson, Project Manager
E-mail: Dave@srmdevelopment.com
Telephone: 425.629.4437

Re: Geotechnical Engineering Report
Kirkland Cross Corridor Improvements
Google Campus Expansion
431 7th Avenue South
Kirkland, WA
Terracon Project No. 81145002

Dear Mr. Tomson:

Terracon Consultants, Inc. (Terracon) has completed the geotechnical engineering services for the above referenced project. This study was performed in general accordance with our proposal number P81140002 dated January 7, 2014. This report presents the findings of the subsurface exploration and provides geotechnical recommendations concerning the design and construction of foundations, subsurface drainage, earthwork, subgrade, and retaining walls for the proposed project.

We appreciate the opportunity to be of service to you on this project. If you have any questions concerning this report, or if we may be of further service, please contact us.

Sincerely,
Terracon Consultants, Inc.

RICHARD D. LUARK
STATE OF WASHINGTON
29321
REGISTERED
PROFESSIONAL ENGINEER

Richard D. Luark, PE
Senior Project Engineer

FOR

David A, Baska, Ph.D., P.E.
Principal

TABLE OF CONTENTS

Page

EXECUTIVE SUMMARY i
1.0 INTRODUCTION 1
2.0 PROJECT INFORMATION 1
2.1 Project Description 1
2.2 Site Location and Description 2
3.0 SUBSURFACE CONDITIONS 2
3.1 Geology 2
3.2 Subsurface Soil Conditions 3
3.3 Groundwater 3
4.0 RECOMMENDATIONS FOR DESIGN AND CONSTRUCTION 4
4.1 Geotechnical Considerations 4
4.2 Earthwork 4
4.2.1 Site Preparation 4
4.2.2 Structural Fill 5
4.2.3 Compaction Requirements 6
4.2.4 Earthwork Construction Consideration 6
4.2.5 Wet Weather / Subgrade Stabilization 6
4.3 Seismic Considerations 7
4.4 Pedestrian Bridge Foundations 7
4.4.1 Shallow Foundation Design Recommendations 7
4.4.2 Deep Foundation Design Recommendations 8
4.4.3 Foundation Construction Considerations 9
4.4 Lateral Earth Pressures 9
4.5 Subgrades 11
4.5.1 Asphalt Concrete Pavement Subgrade Design Recommendations 11
4.5.2 Portland Cement Concrete Pavers Subgrade Design Recommendations 11
4.5.3 Sport Court and Pedestrian Pathway Subgrade Design Recommendations 11
4.5.4. Subgrade Construction Recommendations 11
4.6 Subsurface Drainage Provisions 11
4.6.1 Wall Drainage 11
5.0 GENERAL COMMENTS 11

APPENDIX A – FIELD EXPLORATION
Exhibit A-1 Site Location
Exhibit A-2 Exploration Plan
Exhibit A-3 Field Exploration Description
Exhibit A-4 to A-8 Boring Logs

APPENDIX B – SUPPORTING INFORMATION
Exhibit B-1 Laboratory Testing
Exhibits B-2 to B-3 Grain Size Distribution Results
Exhibits B-4 to B-5 Atterberg Limit Results

TABLE OF CONTENTS (continued)

APPENDIX C – SUPPORTING DOCUMENTS

Exhibit C-1	General Notes
Exhibit C-2	Unified Soil Classification System

APPENDIX D – SUPPORTING DOCUMENTS

Exhibit D-1	Soil Properties and Parameters Model
Exhibit D-2	Lateral Analysis (LPile) Output

EXECUTIVE SUMMARY

A geotechnical investigation has been completed for the design of a proposed elevated pedestrian bridge, pathways, sport court, sand volleyball court, retaining wall, and associated landscaping located in the Cross Kirkland Corridor between the existing Google campus at 747 6th Street South and the campus expansion that is currently under construction at 431 7th Avenue South in Kirkland, Washington. Four (4) borings were each completed to a depth of approximately 20 feet below the existing ground surface within the project site, along the alignment of the proposed pedestrian bridge structure. Based on the information obtained from our subsurface exploration, the site is suitable for development of the proposed project. The geotechnical considerations identified included the following:

- **Soils and Groundwater:** Soils at the site generally consisted of approximately 3 feet of sandy gravel underlain by lean clay to sandy silt that extended to the depth of each boring. A perched water table was observed at the top of the very stiff tan silt layer. The regional groundwater table was not detected in the borings advanced for this study.

- **Foundations**: Shallow foundations will provide adequate support for the proposed elevated pedestrian walkway structure provided that the foundation subgrades are properly prepared. Drilled shaft foundations can also be used to support the structure.

- **Seismic Design Considerations**: Per the 2012 International Building Code (IBC), the seismic site classification for this site is D.

- **Site Soils:** The majority of the site soils consist of silt which is moisture sensitive and prone to disturbance in wet site conditions. We do not recommend reuse of the silt and sandy silt for reuse as structural fill.

- **Main Trunk Sewer Line:** A 84-inch diameter King County main trunk sewer line is present in the Cross Kirkland Corridor. Based on the proposed bridge location, one of the piers will be near the sewer line. The foundations should be designed and constructed as to not impact the 84-inch diameter sewer line.

Close monitoring of the construction operations discussed herein will be critical in achieving the design subgrade support. We therefore recommend that Terracon be retained to monitor that portion of the work.

This summary should be used in conjunction with the entire report for design purposes. It should be recognized that details were not included or fully developed in this section, and the report must be read in its entirety for a comprehensive understanding of the items contained herein. The section titled **GENERAL COMMENTS** should be read for an understanding of the report limitations.

GEOTECHNICAL ENGINEERING REPORT
Improvements in the Cross Kirkland Corridor
Google Campus Expansion
431 7th Avenue South
Kirkland, Washington

Terracon Project No. 81145002

March 19, 2014

1.0 INTRODUCTION

A geotechnical engineering report has been completed for the design of a proposed elevated pedestrian bridge, pathways, sport court, sand volleyball court, retaining wall, and associated landscaping located in the Cross Kirkland Corridor between the existing Google campus at 747 6th Street South and the campus expansion that is currently under construction at 431 7th Avenue South. Four (4) borings were each completed to a depth of approximately 20 feet below the existing ground surface within the project site, along the alignment of the proposed pedestrian bridge structure. Logs of the borings along with an Exploration Plan are included in Appendix A of this report.

The purpose of these services is to provide information and geotechnical engineering recommendations relative to:

- soil conditions
- groundwater conditions
- lateral earth pressures
- hardscape subgrade
- foundation design and construction
- site preparation and earthwork
- seismic considerations
- geotechnical construction

The project description, site conditions and our geotechnical conclusions and design recommendations are presented in the text of this report. Supporting data including field exploration procedures, detailed exploration logs, results of laboratory testing are presented as appendices.

2.0 PROJECT INFORMATION

2.1 Project Description

Item	Description
Proposed structure	Elevated pedestrian bridge

Item	Description
Other proposed improvements	Pedestrian pathway, road connecting existing campus and campus expansion, retaining wall, concrete paving surrounding pedestrian pathway, sport court, sand volleyball court, assorted landscaping
Elevations	Ground surface at bridge foundations: 163 feet (west) to 170 feet (east) Landscape: 165 feet to 172 feet Sport court: 163.5 feet Volleyball court: 164.8 feet
Below grade areas	None

2.2 Site Location and Description

Item	Description
Location	Cross Kirkland Corridor Between 747 6th Avenue South and 431 7th Avenue South, Kirkland
Existing improvements	Construction staging area (west), gravel surfaced pedestrian pathway (east)
Current ground cover	Gravel and Pavement Surfacing
Existing topography	Sloping from 172 feet at the north end of the project to 166 feet at the south end of the project

3.0 SUBSURFACE CONDITIONS

A description of our field exploration is presented in Appendix A. Laboratory tests were conducted on selected soil samples obtained during our exploration. A description of the laboratory testing is presented in Appendix B.

3.1 Geology

The Seattle area is generally underlain by a glacial sequence of soil consisting of recessional outwash, till, advance outwash, and lacustrine deposits associated with the Vashon Stade glaciation. Also present are older glacial and interglacial deposits. The following geologic map was reviewed as part of our study:

- Minard, J.P. “Geologic map of the Kirkland quadrangle, Washington” (1983).

Based on the geologic map, the site is underlain by Q_{vt}, which is identified as deposits of Vashon age till. These deposits consist of a dense to very dense mixture of gravel, sand, silt and clay, with some cobble and trace boulders.

The exploration program conducted for this study, however, revealed subsurface conditions consistent with fine-grained non-glacial and glacial transitional beds (Q_{tb}). The site is located near the mapped interface of the Q_{tb} and Q_{vt} layers, within the accuracy of most geologic maps.

3.2 Subsurface Soil Conditions

The four borings for this evaluation extended to depths of 21.5 feet below the existing ground surface within the project site. Soil descriptions presented in this report are based on the subsurface conditions encountered at specific exploration locations across the site. Variations in subsurface conditions may exist between the exploration locations. Refer to the boring logs in Appendix A for a detailed description of the subsurface conditions encountered at the locations of the explorations completed for this project. Stratification boundaries on the logs represent the approximate locations of changes in soil types; in-situ, the transition between materials may be gradual. Based on our borings and laboratory testing, a generalized description of the site soil conditions is presented below.

Stratum	Approximate Depth to Bottom of Stratum (feet)	Material Description	Consistency/ Density
1	2 to 5.5	8” Asphalt (B-4 only) over Sandy Gravel (interpreted fill)	Loose to Dense
2	5.5 to 8	Silty Sand to Sandy Silt (B-3 and B-4 only)	Loose and very Stiff
3	6 to 11	Sandy Silt to Lean Clay	Very Stiff
4	Undetermined (all borings terminated in this stratum)	Silt to Lean Clay	Very Stiff to Hard

3.3 Groundwater

The groundwater and soil stratigraphy observed in our borings indicates a perched water table atop the Stratum 3 silt. Though the water table was not consistently detected during drilling, groundwater was observed within the boreholes after reaching termination depth. Local experience at the adjacent Google site under construction to the west was used to approximate the location of the perched table.

No other groundwater table was detected during the course of drilling.

Groundwater level fluctuations occur due to seasonal variations in the amount of rainfall, runoff and other factors not evident at the time the borings were performed. Therefore, groundwater levels during construction or at other times in the life of the structure may be higher or lower than the levels indicated on the boring logs. The possibility of groundwater level fluctuations should be considered when developing the design and construction plans for the project.

4.0 RECOMMENDATIONS FOR DESIGN AND CONSTRUCTION

4.1 Geotechnical Considerations

Based on our subsurface exploration program and associated research, the proposed development is feasible from a geotechnical standpoint, contingent on proper design and construction practices. Primary geotechnical considerations are discussed in the following paragraphs.

- Foundation support of the proposed structures with shallow spread footings is feasible. Due to the location of the existing 84-inch diameter King County sanitary sewer line in relation to the pedestrian bridge pier number 4, support can also be provided with drilled piers.
- The site soils are silty and prone to disturbance in wet site conditions. Use of the onsite soils for structural fill will be limited to extended periods of dry weather during the summer months. We do not recommend reuse of the silts and clays as structural fill.

Specific conclusions and recommendations regarding these geotechnical considerations, as well as other geotechnical aspects of design and construction of foundation systems and other earthwork related phases of the project are outlined in the following sections. The recommendations contained in this report are based upon the results of field and laboratory testing (which are presented in Appendices A and B), engineering analyses, and our current understanding of the proposed project. ASTM and Washington State Department of Transportation (WSDOT) specification codes cited herein respectively refer to the current manual published by the American Society for Testing & Materials and the current edition of the *Standard Specifications for Road, Bridge, and Municipal Construction, (M41-12)*.

4.2 Earthwork

4.2.1 Site Preparation

Preparation for site grading and construction should begin with procedures intended to control surface water runoff and off-site erosion.

Existing improvements within the project site (e.g., pavements, concrete flat work, foundations, utilities, etc.) should be removed or relocated, as necessary, in accordance with all local, state,

and federal regulations. We have assumed that all existing site fill will be removed in areas to receive structural fill.

4.2.2 Structural Fill

All fill material placed under and adjacent to the bridge foundations, pathways, and sport court should be placed in accordance with the recommendations herein for structural fill. Structural fill is not allowed under foundation elements unless they are designed for the appropriate bearing capacity. Prior to placement, surfaces to receive structural fill should be in a firm and non-yielding condition and the existing fill layer at the site shall have been removed. All structural fill should be free of organic material, debris, and other deleterious material. Individual particle size should be less than 4 inches in maximum dimension.

The suitability of soils for use as structural fill is dependent on the gradation and moisture content of the soil when it is placed. As the amount of fines (that soil fraction passing the U.S. No. 200 sieve) increases, soil becomes increasingly sensitive to small changes in moisture content and adequate compaction becomes more difficult, or impossible, to achieve. Generally, soils containing more than about 5 percent fines by weight (based on that soil fraction passing the U.S. No. 4 sieve) cannot be compacted to a firm, non-yielding condition when the moisture content is more than a few percent from optimum. The optimum moisture content yields the greatest soil density under a given compactive effort.

In general, the site soils consist of sandy gravel with trace silt, and silt to sandy silt. The sandy gravel soils are considered generally acceptable for re-use as structural fill from a compositional perspective, provided they are protected from moisture during wet weather conditions. The silt and sandy silt soils are highly moisture-sensitive and poorly suited for use as structural fill. If earthwork construction occurs during wet weather, the excavated sandy gravel soils may become difficult to achieve reliable compaction and not be suitable for reuse.

Import soils for use as structural fill within and adjacent to the proposed building should consist of “common” or “select” granular material, depending on the weather conditions at the time of placement and the anticipated weather conditions until the fill is protected. These materials are defined below:

- **Select Fill** - “Select” granular fill is recommended for use in wet weather conditions. Select fill should meet the general requirements of Section 9-03.14(1), Gravel Borrow, as presented in the Washington State Department of Transportation (WSDOT) Standard Specifications for Road, Bridge, and Municipal Construction. However, the percent passing the US No. 200 mesh sieve should be modified from the WSDOT specification to a maximum of 5 percent by weight passing the US No. 200 mesh sieve. Select fill can generally be placed and compacted in a wider variety of weather conditions than Common import fill.

- **Common Fill** - "Common" fill generally consists of lesser quality, more moisture-sensitive soils that can be compacted to a firm and non-yielding condition if near the optimum moisture content. "Common" engineered fill should meet the requirements of Section 9-03.14(3), Common Borrow, as presented in the WSDOT Standard Specifications for Road, Bridge, and Municipal Construction.

The use of other fill types should be reviewed and approved by the engineer. Structural fill should be placed and compacted in horizontal lifts, using equipment and procedures that will produce recommended moisture content and densities throughout the fill.

4.2.3 Compaction Requirements

Structural fill should be placed in lifts no greater than 8 inches in loose thickness and compacted to a firm and non-yielding condition. Each lift should be compacted to at least 95 percent of the modified Proctor (ASTM D 1557) maximum dry density under foundations, roadways, pathways, concrete surfaces, and the volleyball and sport courts. This recommended level of compaction should be reduced to 90 to 92 percent of the maximum dry density for the fill behind retaining walls and for other soft scape areas. Moisture contents within 2 percent of the optimum moisture content will likely be required to achieve the recommended relative compaction.

4.2.4 Earthwork Construction Consideration

It is anticipated that excavations for the proposed construction can be accomplished with conventional earthmoving equipment. The earthwork contractor should anticipate stiff to hard soil conditions.

If earthwork takes place during freezing conditions, we recommend that the exposed subgrade be allowed to thaw and be re-compacted prior to placing subsequent lifts of structural fill. Alternatively, the frozen soil could be scraped off and wasted to expose unfrozen soil.

The contractor is responsible for designing and constructing stable, temporary excavations as required in order to maintain the stability of both the excavation sides and bottom. Excavations should be sloped or shored in the interest of safety following local, and federal regulations, including current OSHA excavation and trench safety standards.

4.2.5 Wet Weather / Subgrade Stabilization

We recommend that the earthwork portion of this project be completed during extended periods of dry weather if possible. If earthwork is completed during the wet season, it may be necessary to take extra precautionary measures to protect subgrade soils. Wet season earthwork may require additional measures beyond that which would be expected during the drier months. Once subgrades are established, it may be necessary to protect the exposed subgrade soils from construction traffic. Placing quarry spalls or clean pit-run sand and gravel over these areas would further protect the soils from construction traffic. Exposed footing subgrades may require placement of a concrete mud mat to protect the bearing surface after excavation.

4.3 Seismic Considerations

We understand the site will be designed to conform to the 2012 International Building Code (IBC) which is based on designing for an event with a 2 percent chance of exceedance in 50 years. The following discusses the soil site class and seismic hazard potential at the site:

- **Site Class** - The stiff to hard glacially consolidated soil may be considered Site Class D soil profile for IBC code-based seismic design.
- **Liquefaction** - The liquefaction potential at the site, in response to the design seismic event, is considered to be negligible as the foundation soils are stiff to very stiff silts.
- **Seismic Surcharge** - For backfilled walls free to rotate at the top, we recommend a uniform seismic lateral surcharge pressure equal to 8H , where H is equal the wall height in feet, and pressure is in pounds per square foot (psf).

4.4 Pedestrian Bridge Foundations

It is our understanding that factored design compressive foundation loads have been preliminarily estimated at 140 kips at the pedestrian bridge piers. The proposed elevated walkway structure can be supported at this load by shallow, spread footings or drilled shafts. Should spread footings be chosen, we recommend the structure be founded on shallow footings bearing on the native very stiff silt and lean clay deposits. Specific foundation recommendations are given in the following sections.

4.4.1 Shallow Foundation Design Recommendations

Footings on Silt

DESCRIPTION	Bridge Foundation
Bearing material	Very stiff, undisturbed, native soils.
Allowable bearing pressure[1]	8 ksf
Modulus of subgrade reaction	250 pounds per cubic inch.
Minimum width	15 feet
Minimum depth of embedment	4 feet
Estimated total settlement	<1 inch
Estimated differential settlement	< 1/2 inch
Allowable coefficient of sliding friction[2]	0.4
Allowable passive earth pressure[2]	250 pcf

1. Based upon a minimum factor of safety of 3.
2. Based upon a minimum factor of safety of 1.5.

The net allowable bearing pressures presented in the tables above may be increased by one-third to resist transient, dynamic loads such as wind or seismic forces.

Other Design Considerations: We understand that the structural design of the proposed shallow foundations is constrained by the eccentric loading caused by high moments acting on the pedestrian walkway. Our geotechnical design recommendations are made with this limitation in mind.

Site Constraints: An 84-inch diameter King County main trunk sewer line is located in the Cross Kirkland Corridor, running the length of the site. The top of the 84-inch diameter sewer line is approximately 10 feet below site grades. Other underground utilizes are also present in the Cross Kirkland Corridor and must be considered in the design of the proposed improvements.

4.4.2 Deep Foundation Design Recommendations

We understand that drilled shafts may be considered as one of the foundation options. The following paragraphs present our specific recommendations and comments regarding the design and installation of drilled shaft foundations.

Pile Sizes and Properties: Typical diameters of drilled shafts can range from 18 to 48 inches in 2-inch or 4-inch increments. We have considered 42 inch drilled shafts for axial capacity.

Static Compressive and Uplift Capacities: Explorations consistently encountered very stiff silt at a depth of 5.5 to 8 feet, with no weak stratum detected after that depth in any boring down to the final boring depth of 21.5 feet. Nearby borings indicate that soil conditions, at least toward the west side of the project site, degrade from 25 feet to 40 feet, from a hard to very stiff consistency. Because drilled shaft installation does not compact the soils at the foundation base, we used a tip resistance consistent with these moderately softer soils. For this reason, we recommend a minimum shaft depth of 30 feet to achieve the preliminary design requirement. All values include a factor of safety of 2.0 for compressive side capacity, 3.0 for compressive tip capacity, and 3.0 for uplift side capacity. In all cases, the project structural engineer should verify that the pile shafts have sufficient internal compressive strength to accommodate the design capacities.

Factored Capacity (D=42 in, L=30 ft)			
Side	Tip	**Total Comp.**	**Total Uplift**
kips	kips	kips	kips
205	86	291	136

Lateral Parameters: Soil parameters for lateral resistance in LPile were developed from the SPT logs and FHWA suggestions for soil parameters based on relative density. A summary of values used in our LPile analysis can be found in the attached Appendix D. The point of fixity in our model is reached at a depth of about 24 feet.

Lateral Deflections: Drilled shaft deflections perpendicular to the direction of the bridge were about ¼" for the 42" diameter shaft used in our model. Additionally, modeled shaft deflections in the direction of the sewer line were less than 1/8", and none larger than 0.01 inches at the sewer line elevation. For deflections of this magnitude, lateral impacts to the sewer line are considered to be negligible. Detailed graphs for deflection, shear, and moment diagrams are located in Appendix D.

Static and Seismic Settlements: We estimate that total post-construction static settlements of pile-supported bridges will not exceed about ½ inch. Differential settlements across the width or length of the bridge will not likely exceed approximately two-thirds of the actual total settlement.

Installation Monitoring: We recommend that a qualified geotechnical representative be retained to continuously monitor the installation of all drilled shaft foundations, in order to verify that suitable tip depths are reached and proper procedures are followed. This monitoring program should include observation and documentation of construction equipment, drilled pier materials, installation procedures, drilling conditions, and installation sequencing.

4.4.3 Foundation Construction Considerations

The base of all foundation excavations should be free of water and loose soil prior to placing concrete. Concrete should be placed soon after excavating to reduce bearing soil disturbance. If water in excess of 1 foot has accumulated in the bottom of drilled pier excavations at the time of concrete placement, a tremie should be used to preserve foundation quality. Should the soils at bearing level become excessively dry, disturbed, or frozen, the affected soil should be removed prior to placing concrete. This includes disturbance during placement of reinforcing steel. We recommend that Terracon be retained to observe foundation subgrades.

4.4 Lateral Earth Pressures

We understand that proposed grading cuts along the east side of the project site may require retaining walls to lower site grades to provide adequate clearance for vehicles to pass beneath the pedestrian bridge. Retaining walls with unbalanced backfill levels on opposite sides should be designed for earth pressures at least equal to those indicated in the following table. Earth pressures will be influenced by structural design of the walls, conditions of wall restraint, methods of construction and/or compaction and the strength of the materials being restrained. If walls are free to yield at the top in an amount equal to approximately 0.002 times the height of

the wall, then the soil pressure will be less than if the movement is more limited by stiffness or by construction of the structural floor network prior to backfilling. We recommend that equivalent fluid pressures of 35 pcf and 55 pcf be used for yielding and non-yielding backfilled walls, respectively.

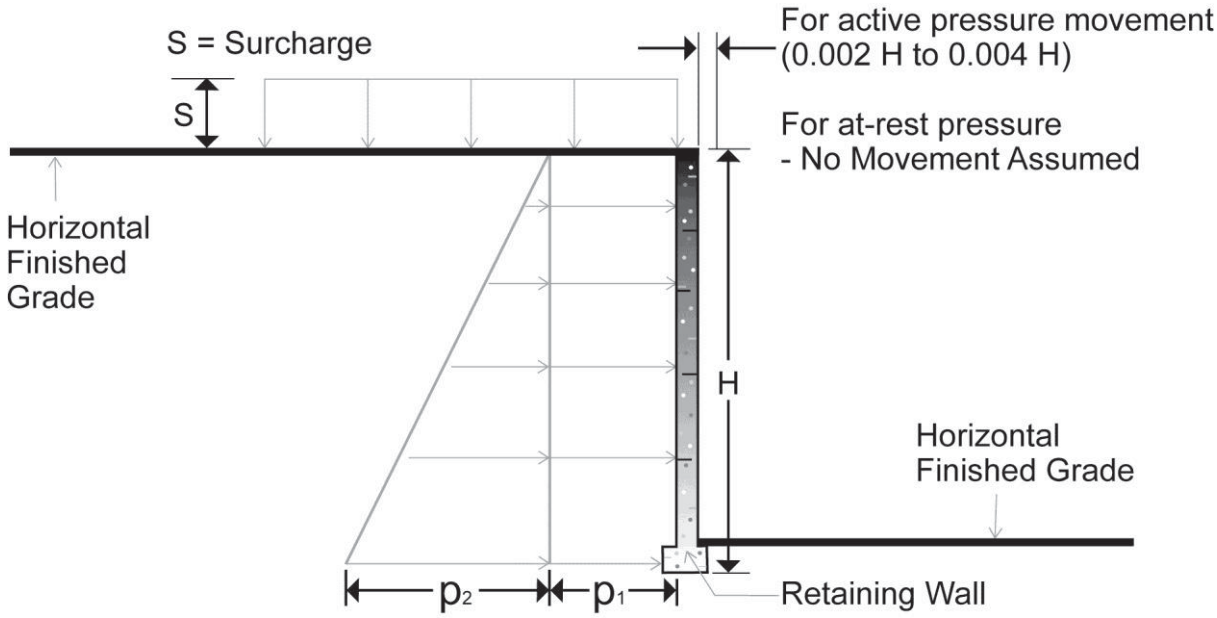

Backfill placed against structures should consist of granular soils. For the granular values to be valid, the granular backfill must extend out from the base of the wall at an angle of at least 45 degrees from vertical. To calculate the resistance to sliding, a value of 0.4 should be used as the allowable coefficient of friction between the footing and the underlying soil. Lateral resistance can also be provided by passive earth pressure acting on the embedded portion of the wall. An allowable passive earth pressure, presented as an equivalent fluid weight equal to 250 pcf is recommended for design.

These equivalent fluid pressures are based on the assumption of a uniform backfill and no buildup of hydrostatic pressures behind the wall. To prevent the buildup of lateral earth pressures in excess of the above designed pressures, over compaction of fill behind the walls should be avoided. This can be accomplished by placing the backfill within 24 inches of the wall in lifts not exceeding 8 inches in loose depth and compacting with hand-operated or self-propelled equipment.

Care should be taken where utilities penetrate through basement walls. Minor settlement of the backfill can put significant soil loading on utilities, and some form of flexible connection may be appropriate at backfilled wall penetrations.

Wall drainage should be provided per section 4.6 of this report.

4.5 Subgrades

4.5.1 Asphalt Concrete Pavement Subgrade Design Recommendations

We recommend a 6-inch thick aggregate base underlying 3 inches of asphalt surface for all asphalt concrete pavements designed for car loads, or the minimum section required by the local municipality, whichever is greater.

4.5.2 Portland Cement Concrete Pavers Subgrade Design Recommendations

We recommend that at least a 4-inch thick aggregate base be placed for all PCC pavers. Additionally, the contractor should follow the paver manufacturer's recommendations for installation procedures.

4.5.3 Sport Court and Pedestrian Pathway Subgrade Design Recommendations

We recommend a 4-inch thick aggregate base be placed for the sport court and the pedestrian pathway shown in the landscaping plans in recognition of occasional maintenance vehicle loads.

4.5.4. Subgrade Construction Recommendations

Before placement of aggregate base materials for hardscape surfaces, loose or excessively moist soils should be removed from the existing subgrade. In addition, any organic materials should also be removed before aggregate placement. It is the contractor's responsibility to ensure that subgrade and aggregate base materials are protected from excessive moisture during installation.

4.6 Subsurface Drainage Provisions

4.6.1 Wall Drainage

Retaining walls should be provided with drainage by installing a drain at the foundation wall with a collection pipe leading to reliable discharge. Drainage behind walls may also consist of a minimum of a 2-foot wide zone of clean sand and gravel fill with less than 5 percent passing the No. 200 sieve. Sand and gravel fill should be separated from the native silt soils with a filter fabric unless the sand and gravel is well-graded and acts as a filter. Alternatively, a full face geocomposite drainage mat can be secured to the back of the retaining wall and connected to a footing drain.

5.0 GENERAL COMMENTS

Terracon should be retained to review the final design plans and specifications so comments can be made regarding interpretation and implementation of our geotechnical recommendations in the design and specifications. Terracon also should be retained to provide observation and

testing services during grading, excavation, foundation construction and other earth-related construction phases of the project.

The analysis and recommendations presented in this report are based upon the data obtained from the borings performed at the indicated locations and from other information discussed in this report. This report does not reflect variations that may occur between borings, across the site, or due to the modifying effects of construction or weather. The nature and extent of such variations may not become evident until during or after construction. If variations appear, we should be immediately notified so that further evaluation and supplemental recommendations can be provided.

The scope of services for this project does not include either specifically or by implication any environmental or biological (e.g., mold, fungi, bacteria) assessment of the site or identification or prevention of pollutants, hazardous materials or conditions. If the owner is concerned about the potential for such contamination or pollution, other studies should be undertaken.

This report has been prepared for the exclusive use of our client for specific application to the project discussed and has been prepared in accordance with generally accepted geotechnical engineering practices. No warranties, either expressed or implied, are intended or made. Site safety, excavation support, and dewatering requirements are the responsibility of others. In the event that changes in the nature, design, or location of the project as outlined in this report are planned, the conclusions and recommendations contained in this report shall not be considered valid unless Terracon reviews the changes and either verifies or modifies the conclusions of this report in writing.

APPENDIX A
FIELD EXPLORATION

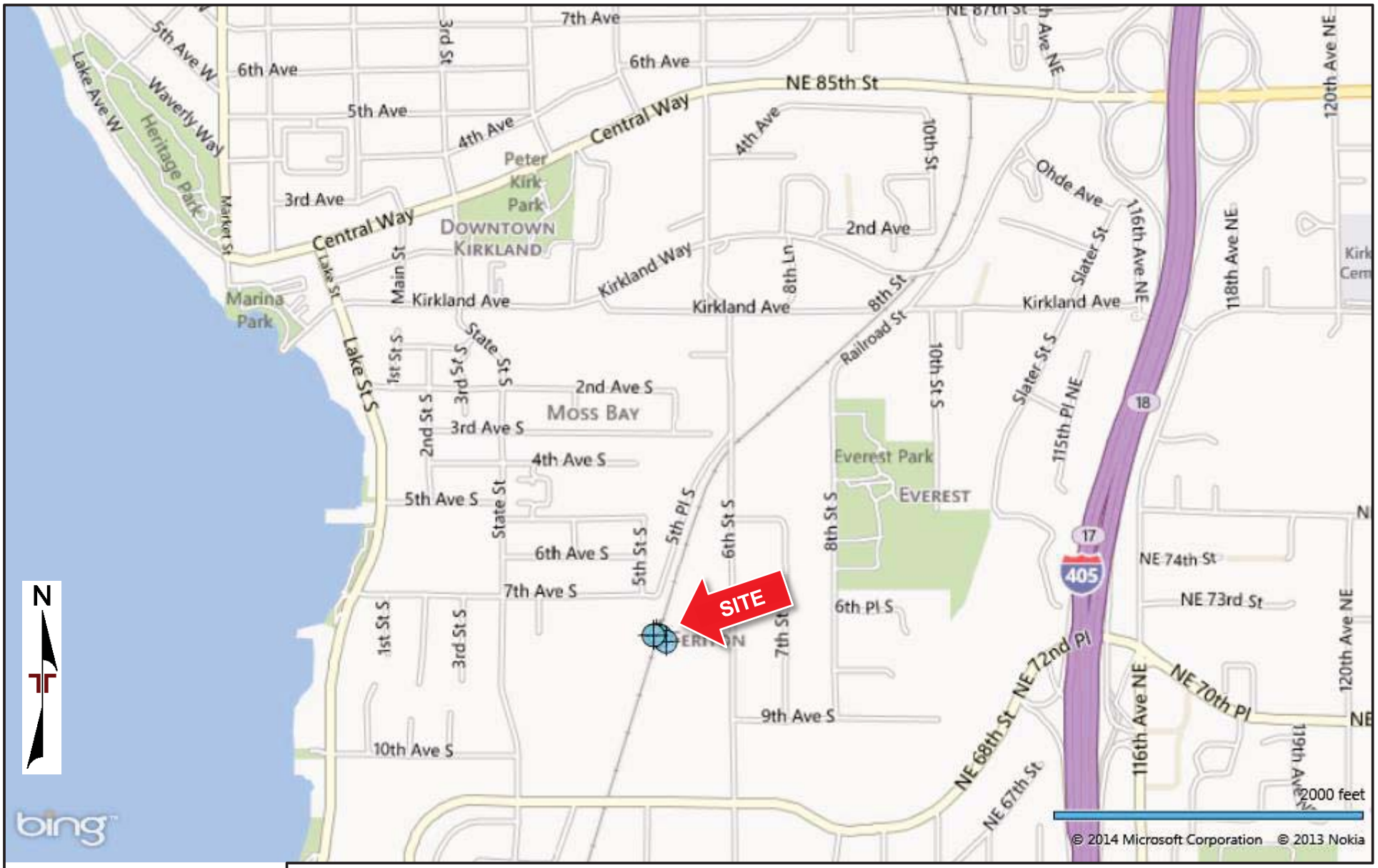

ROAD MAP PROVIDED BY MICROSOFT BING MAPS

DIAGRAM IS FOR GENERAL LOCATION ONLY, AND IS NOT INTENDED FOR CONSTRUCTION PURPOSES

Project Manager: RDL	Project No. 81145002
Drawn by: RTS	Scale: AS SHOWN
Checked by: RDL	File Name: A-1.dwg
Approved by: DAB	Date: 2/21/14

Terracon
21905 64th Ave W Suite 100
Mountlake Terrace, WA 98043

SITE LOCATION

Google Kirkland ROW Improvements
431 7th Avenue South
Kirkland, WA

Exhibit
A-1

ATTACHMENT 11
FILE NO. SEP14-01380
GEOTECH REPORT

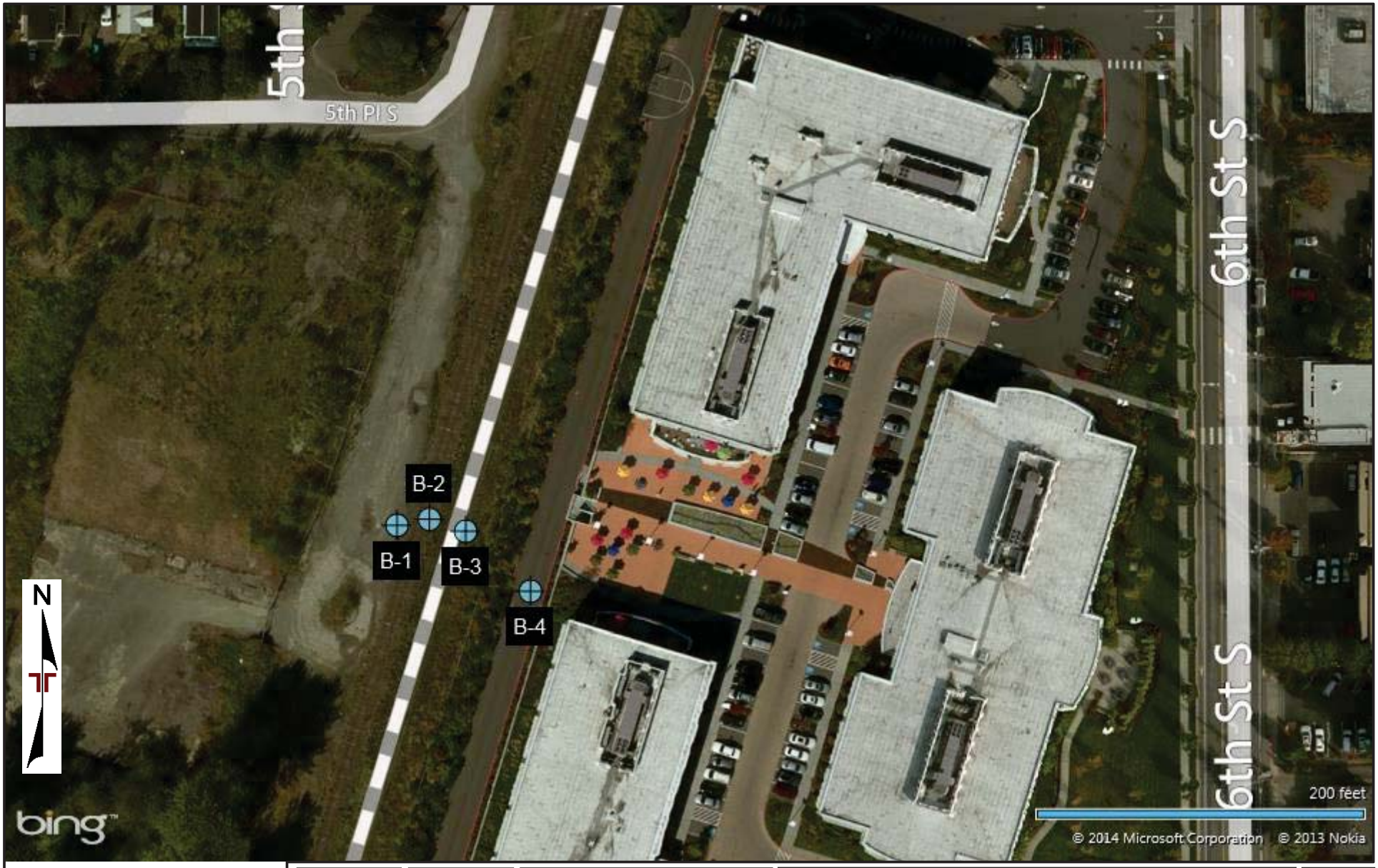

AERIAL PHOTOGRAPHY PROVIDED BY MICROSOFT BING MAPS

DIAGRAM IS FOR GENERAL LOCATION ONLY, AND IS NOT INTENDED FOR CONSTRUCTION PURPOSES

Project Manager: RDL	Project No. 81145002
Drawn by: RTS	Scale: AS SHOWN
Checked by: RDL	File Name: A-2.dwg
Approved by: DAB	Date: 2/21/14

Terracon
21905 64th Ave W Suite 100
Mountlake Terrace, WA 98043

EXPLORATION PLAN

Google Kirkland ROW Improvements
431 7th Avenue South
Kirkland, WA

Exhibit
A-2

ATTACHMENT 11
FILE NO. SEP14-01380
GEOTECH REPORT

Field Exploration Description

Our field exploration for this project included 4 borings completed on February 11, 2014. The approximate exploration locations are shown on the Exploration Plan, Exhibit A-2. Exploration locations were determined using GPS coordinates and should be considered accurate to +/- 20 feet.

Boring Procedures

The borings were drilled by an independent company working under subcontract to Terracon. The borings were advanced with a hollow-stem auger using a truck-mounted drill rig. A geologist from our firm continuously observed the borings, logged the subsurface conditions encountered, and obtained representative soil samples. All samples were stored in moisture-tight containers and transported to our laboratory for testing.

Throughout the drilling operation, soil samples were obtained at 2.5 to 5-foot depth intervals by means of the Standard Penetration Test (ASTM: D-1586) using a cathead. This testing and sampling procedure consists of driving a standard 2-inch outside diameter steel split spoon sampler 18 inches into the soil with a 140-pound hammer falling 30 inches. The number of blows required to drive the sampler through each 6-inch interval is recorded, and the total number of blows struck during the final 12 inches is reported as the Standard Penetration Resistance, or “blow count” (N value). If a total of 50 blows is struck within any 6-inch interval, the driving is stopped and the blow count is reported as 50 blows for the actual penetration distance. The resulting Standard Penetration Resistance values indicate the relative density of granular soils and the relative consistency of cohesive soils.

The enclosed boring logs describe the vertical sequence of soils and materials encountered in each boring, based primarily upon our field classifications. Where a soil contact was observed to be gradational, our logs indicate the average contact depth. Where a soil type changed between sample intervals, we inferred the contact depth. Our logs also graphically indicate the blow count, sample type, and approximate depth of each soil sample obtained from the boring. If groundwater was encountered in a borehole, the approximate groundwater depths, and date of observation, are depicted on the log.

BORING LOG NO. B-1

PROJECT: Google Pedestrian Bridge

CLIENT: SRMKII, LLC
Spokane, Washington

SITE: 500 7th Ave S
Kirkland, Washington

LOCATION See Exhibit A-2

Latitude: 47.66973° Longitude: -122.19836°

Surface Elev.: 165 (Ft.)

DEPTH	ELEVATION (Ft.)	Description
2.0	163	**SANDY GRAVEL (SP)**, trace silt, gray, medium dense, moist (Probable Fill)
6.0	159	**SANDY SILT (ML)**, tan, very stiff, moist (Weathered Glaciolacustrine)
21.5	143.5	**SILT (ML)**, gray, hard, fine sand lenses, moist (Glaciolacustrine)
		Boring Terminated at 21.5 Feet

DEPTH (Ft.)	WATER LEVEL OBSERVATIONS	SAMPLE TYPE	RECOVERY (In.)	FIELD TEST RESULTS	SAMPLE NUMBER	WATER CONTENT (%)	PERCENT FINES
		X	10	7-8-10 N=18	S-1	18	58
5		X	18	5-8-11 N=19	S-2		
		X	18	6-10-15 N=25	S-3		
10		X	18	10-15-16 N=31	S-4		
15		X	18	13-16-21 N=37	S-5		
20		X	18	11-17-20 N=37	S-6		

Stratification lines are approximate. In-situ, the transition may be gradual.
Groundwater observed within boreholes after reaching termination depth

Hammer Type: Cathead

Advancement Method:
Hollow Stem Auger

Abandonment Method:
Borings backfilled with bentonite chips upon completion

See Exhibit A-3 for description of field procedures.

See Appendix B for description of laboratory procedures and additional data (if any).

See Appendix C for explanation of symbols and abbreviations.

Notes:

WATER LEVEL OBSERVATIONS

Terracon
21905 64th Ave. W, Suite 100
Mountlake Terrace, Washington

Boring Started: 2/11/2014 | Boring Completed: 2/11/2014
Drill Rig: Trailer D2400 | Driller: Geologic Drill
Project No.: 81145002 | Exhibit: A-4

THIS BORING LOG IS NOT VALID IF SEPARATED FROM ORIGINAL REPORT. GEO SMART LOG-NO WELL 81145002 BORINGLOGS 11FEB2014.GPJ TERRACON2012.GDT 3/18/14

BORING LOG NO. B-2

PROJECT: Google Pedestrian Bridge

CLIENT: SRMKII, LLC
Spokane, Washington

SITE: 500 7th Ave S
Kirkland, Washington

LOCATION See Exhibit A-2

Latitude: 47.66974° Longitude: -122.19828°

Surface Elev.: 165.5 (Ft.)

DEPTH	ELEVATION (Ft.)	Description
0		**SILTY SAND (SM)**, trace gravel, brown-tan, very loose, wet (Probable Fill)
3.5	162	**SILT (ML)**, with sand, tan, very stiff to hard, moist (Weathered Glaciolacustrine)
8.5	157	**SILT (ML)**, gray, hard, fine sand lenses, moist (Glaciolacustrine)
21.5	144	***Boring Terminated at 21.5 Feet***

DEPTH (Ft.)	SAMPLE TYPE	RECOVERY (In.)	FIELD TEST RESULTS	SAMPLE NUMBER	WATER CONTENT (%)	PERCENT FINES
		18	3-4-5 N=9	S-1	19	41
5		18	6-8-10 N=18	S-2		
		18	7-9-10 N=19	S-3		
10		18	11-16-19 N=35	S-4		
15		18	12-24-22 N=46	S-5		
20		18	10-20-27 N=47	S-6		

WATER LEVEL OBSERVATIONS

Stratification lines are approximate. In-situ, the transition may be gradual.
Groundwater observed within boreholes after reaching termination depth

Hammer Type: Cathead

Advancement Method:
Hollow Stem Auger

Abandonment Method:
Borings backfilled with bentonite chips upon completion

See Exhibit A-3 for description of field procedures.

See Appendix B for description of laboratory procedures and additional data (if any).

See Appendix C for explanation of symbols and abbreviations.

Notes:

WATER LEVEL OBSERVATIONS

Terracon
21905 64th Ave. W, Suite 100
Mountlake Terrace, Washington

Boring Started: 2/11/2014 | Boring Completed: 2/11/2014
Drill Rig: Trailer D2400 | Driller: Geologic Drill
Project No.: 81145002 | Exhibit: A-5

THIS BORING LOG IS NOT VALID IF SEPARATED FROM ORIGINAL REPORT. GEO SMART LOG-NO WELL 81145002 BORINGLOGS 11FEB2014.GPJ TERRACON2012.GDT 3/18/14

BORING LOG NO. B-3

PROJECT: Google Pedestrian Bridge

CLIENT: SRMKII, LLC
Spokane, Washington

SITE: 500 7th Ave S
Kirkland, Washington

LOCATION See Exhibit A-2

Latitude: 47.66972° Longitude: -122.19819°

Surface Elev.: 165.5 (Ft.)

DEPTH	ELEVATION (Ft.)	Description
3.0	162.5	**SILTY SAND (SM)**, trace gravel, dark brown, loose, moist (Probable Fill)
5.5	160	**SILTY SAND (SM)**, trace gravel, gray, loose, moist
8.5	157	**SILT (ML)**, trace sand, tan, very stiff to hard, moist (Weathered Glaciolacustrine)
21.5	144	**SILT (ML)**, trace sand, gray, hard, moist (Glaciolacustrine)
		Boring Terminated at 21.5 Feet

DEPTH (Ft.)	SAMPLE TYPE	RECOVERY (In.)	FIELD TEST RESULTS	SAMPLE NUMBER	WATER CONTENT (%)	PERCENT FINES
		18	1-5-3 N=8	S-1	15	46
5		10	7-10-12 N=22	S-2		
		18	5-12-14 N=26	S-3		
10		18	9-17-21 N=38	S-4		
15		18	6-13-18 N=31	S-5		
20		18	14-23-33 N=56	S-6		

Stratification lines are approximate. In-situ, the transition may be gradual.
Groundwater observed within boreholes after reaching termination depth

Hammer Type: Cathead

Advancement Method:
Hollow Stem Auger

Abandonment Method:
Borings backfilled with bentonite chips upon completion

See Exhibit A-3 for description of field procedures.

See Appendix B for description of laboratory procedures and additional data (if any).

See Appendix C for explanation of symbols and abbreviations.

Notes:

WATER LEVEL OBSERVATIONS

Terracon
21905 64th Ave. W, Suite 100
Mountlake Terrace, Washington

Boring Started: 2/11/2014 | Boring Completed: 2/11/2014
Drill Rig: Trailer D2400 | Driller: Geologic Drill
Project No.: 81145002 | Exhibit: A-6

THIS BORING LOG IS NOT VALID IF SEPARATED FROM ORIGINAL REPORT. GEO SMART LOG-NO WELL 81145002 BORINGLOGS 11FEB2014.GPJ TERRACON2012.GDT 3/18/14

BORING LOG NO. B-4

PROJECT: Google Pedestrian Bridge

CLIENT: SRMKII, LLC
Spokane, Washington

SITE: 500 7th Ave S
Kirkland, Washington

LOCATION See Exhibit A-2

Latitude: 47.66962° Longitude: -122.19803°

Surface Elev.: 173 (Ft.)

DEPTH	ELEVATION (Ft.)	Description
0.5	172.5	**8" ASPHALT**
		SANDY GRAVEL (GP), trace silt, dark brown, very dense, moist (Blowcount overstated) (Probable Fill)
5.5	167.5	**SILTY SAND (SM)**, trace gravel, gray, loose, moist
8.0	165	**LEAN CLAY (CL)**, trace sand, tan, very stiff to hard, moist (Weathered Glaciolacustrine)
11.0	162	**LEAN CLAY (CL)**, trace sand, gray, hard, lenses of fine sand, moist (Glaciolacustrine)
21.5	151.5	***Boring Terminated at 21.5 Feet***

DEPTH (Ft.)	SAMPLE TYPE	RECOVERY (In.)	FIELD TEST RESULTS	SAMPLE NUMBER	WATER CONTENT (%)	ATTERBERG LIMITS LL-PL-PI	PERCENT FINES
		12	32-37-34 N=71	S-1			
5		16	3-3-5 N=8	S-2			
		16	5-11-18 N=29	S-3	19	24-16-8	
10		18	15-20-23 N=43	S-4			
		18	8-11-13 N=24	S-5	20	28-19-9	
15		18	10-14-18 N=32	S-6			
20		18	12-18-25 N=43	S-7			

Stratification lines are approximate. In-situ, the transition may be gradual.
Groundwater observed within boreholes after reaching termination depth

Hammer Type: Cathead

Advancement Method:
Hollow Stem Auger

Abandonment Method:
Borings backfilled with bentonite chips upon completion

See Exhibit A-3 for description of field procedures.

See Appendix B for description of laboratory procedures and additional data (if any).

See Appendix C for explanation of symbols and abbreviations.

Notes:

WATER LEVEL OBSERVATIONS

Terracon
21905 64th Ave. W, Suite 100
Mountlake Terrace, Washington

Boring Started: 2/11/2014 | Boring Completed: 2/11/2014
Drill Rig: Trailer D2400 | Driller: Geologic Drill
Project No.: 81145002 | Exhibit: A-7

THIS BORING LOG IS NOT VALID IF SEPARATED FROM ORIGINAL REPORT. GEO SMART LOG-NO WELL 81145002 BORINGLOGS 11FEB2014.GPJ TERRACON2012.GDT 3/18/14

APPENDIX B

LABORATORY TESTING

Laboratory Testing

Samples retrieved during the field exploration were taken to the laboratory for further observation by the project geotechnical engineer and were classified in accordance with the Unified Soil Classification System (USCS) described in Appendix C. At that time, the field descriptions were confirmed or modified as necessary and an applicable laboratory testing program was formulated to determine index properties of the subsurface materials.

Laboratory tests were conducted on selected soil samples and the test results are presented in this appendix and/or on the exploration logs. The laboratory test results were used for the geotechnical engineering analyses, and the development of foundation and earthwork recommendations. Laboratory tests were performed in general accordance with the applicable ASTM, local, or other accepted standards.

Selected soil samples obtained from the site were tested for the following engineering properties:

- Atterberg Limits;
- Sieve Analyses

Graphical results of the sieve analyses and Atterberg limits are included in this appendix.

GRAIN SIZE DISTRIBUTION

ASTM D422

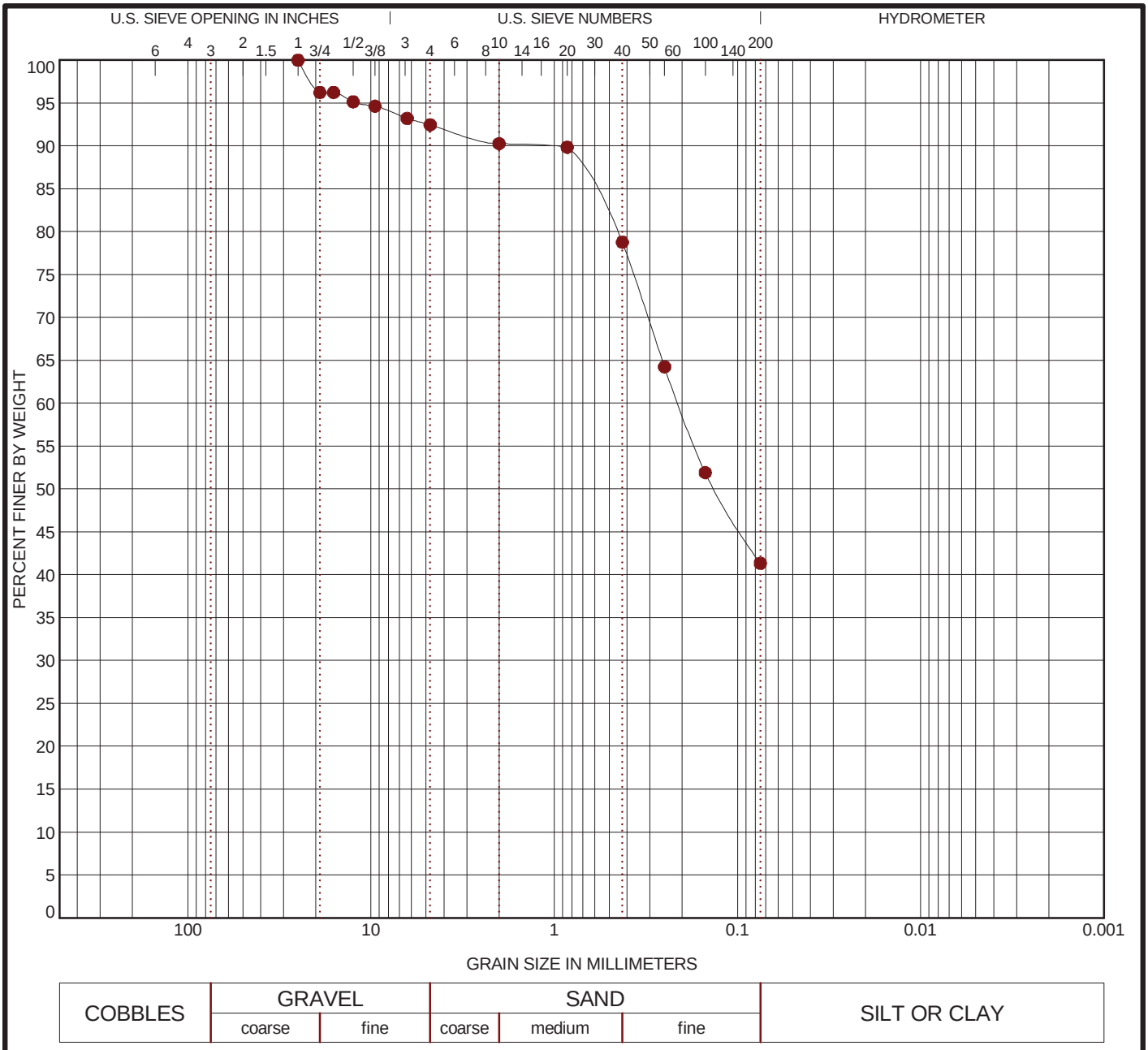

COBBLES	GRAVEL		SAND			SILT OR CLAY
	coarse	fine	coarse	medium	fine	

Boring ID	Depth	USCS Classification	LL	PL	PI	Cc	Cu
B-2	2.5	SM - Silty sand					

Boring ID	Depth	D_{100}	D_{60}	D_{30}	D_{10}	%Gravel	%Sand	%Silt	%Clay
B-2	2.5	25	0.21			7.5	51.1	41.3	

PROJECT: Google Pedestrian Bridge

SITE: 500 7th Ave S
Kirkland, Washington

Terracon
21905 64th Ave. W, Suite 100
Mountlake Terrace, Washington

PROJECT NUMBER: 81145002

CLIENT: SRMKII, LLC
Spokane, Washington

EXHIBIT: B-2

LABORATORY TESTS ARE NOT VALID IF SEPARATED FROM ORIGINAL REPORT. GRAIN SIZE: USCS-2 81145002 BORINGLOGS 11FEB2014.GPJ FENCE PROJECT 1-8-13.GPJ 2/20/14

GRAIN SIZE DISTRIBUTION

ASTM D422

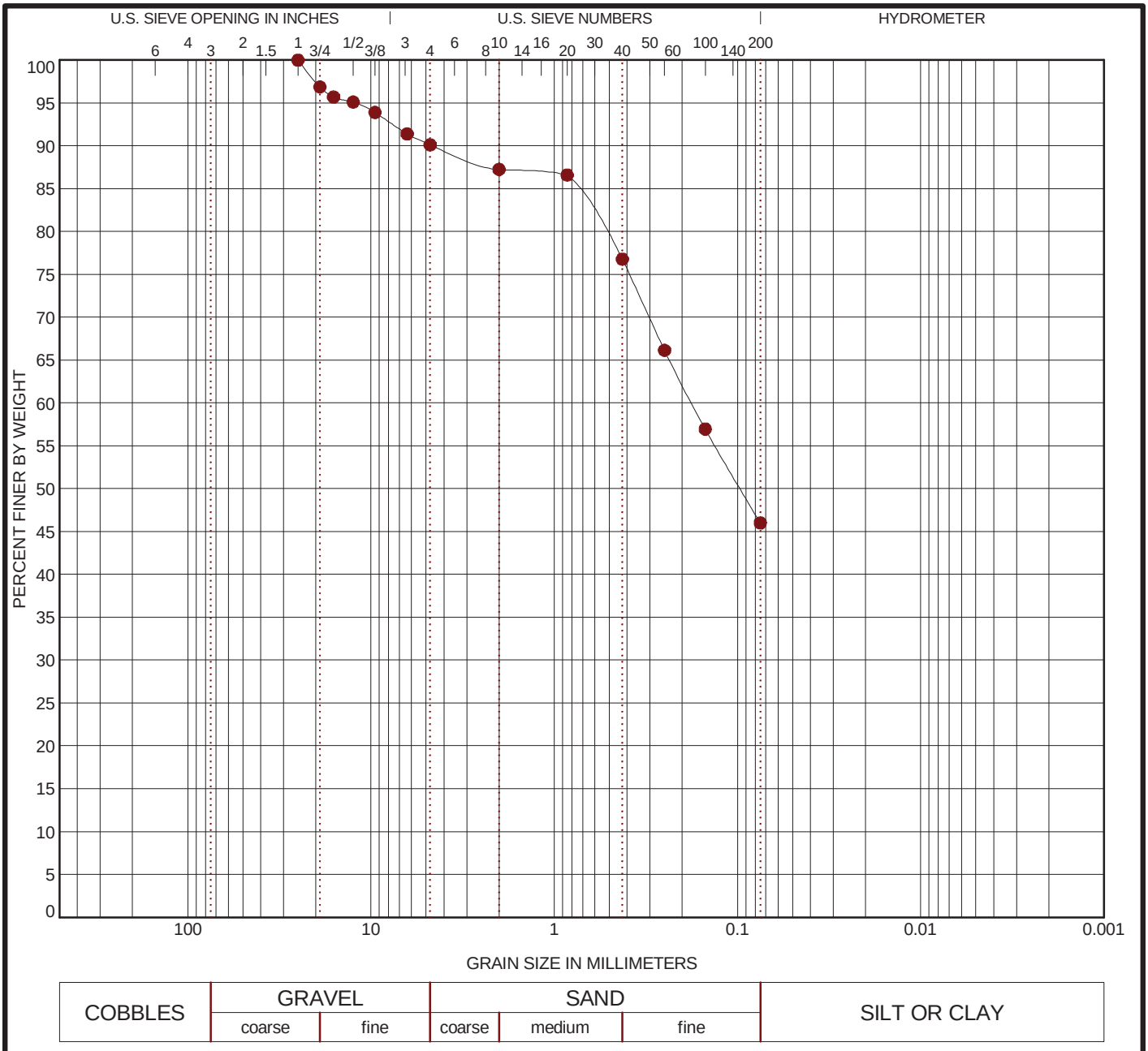

COBBLES	GRAVEL		SAND			SILT OR CLAY
	coarse	fine	coarse	medium	fine	

Boring ID	Depth	USCS Classification	LL	PL	PI	Cc	Cu
B-3	2.5	SM - Silty sand					

Boring ID	Depth	D_{100}	D_{60}	D_{30}	D_{10}	%Gravel	%Sand	%Silt	%Clay
B-3	2.5	25	0.178			9.9	44.1	46.0	

PROJECT: Google Pedestrian Bridge

SITE: 500 7th Ave S
Kirkland, Washington

Terracon
21905 64th Ave. W, Suite 100
Mountlake Terrace, Washington

PROJECT NUMBER: 81145002

CLIENT: SRMKII, LLC
Spokane, Washington

EXHIBIT: B-3

LABORATORY TESTS ARE NOT VALID IF SEPARATED FROM ORIGINAL REPORT. GRAIN SIZE: USCS-2 81145002 BORINGLOGS 11FEB2014.GPJ FENCE PROJECT 1-8-13.GPJ 2/20/14

ATTERBERG LIMITS RESULTS

ASTM D4318

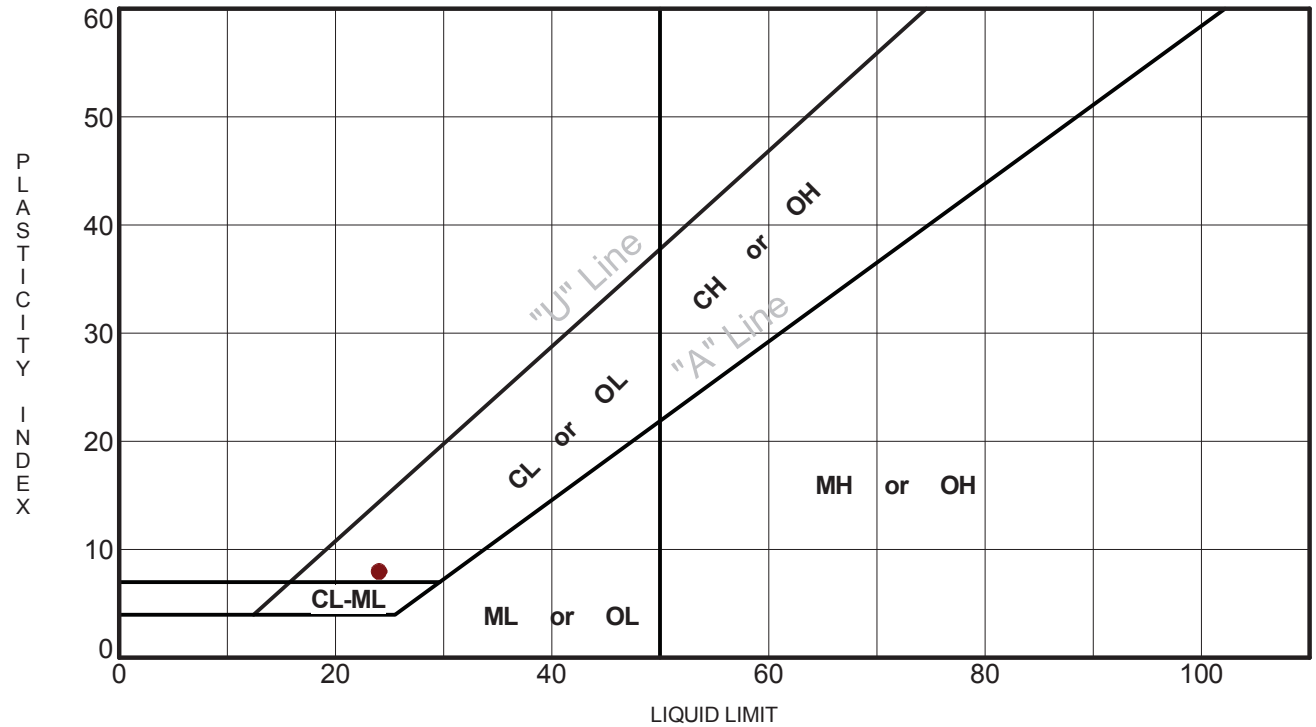

Boring ID	Depth	LL	PL	PI	Fines	USCS	Description
● **B-4**	**7.5**	**24**	**16**	**8**			CL - Lean clay

PROJECT: Google Pedestrian Bridge

SITE: 500 7th Ave S
Kirkland, Washington

Terracon
21905 64th Ave. W, Suite 100
Mountlake Terrace, Washington

PROJECT NUMBER: 81145002

CLIENT: SRMKII, LLC
Spokane, Washington

EXHIBIT: B-4

LABORATORY TESTS ARE NOT VALID IF SEPARATED FROM ORIGINAL REPORT. ATTERBERG LIMITS 81145002 BORINGLOGS 11FEB2014.GPJ FENCE PROJECT 1-8-13.GPJ 3/6/14

ATTERBERG LIMITS RESULTS

ASTM D4318

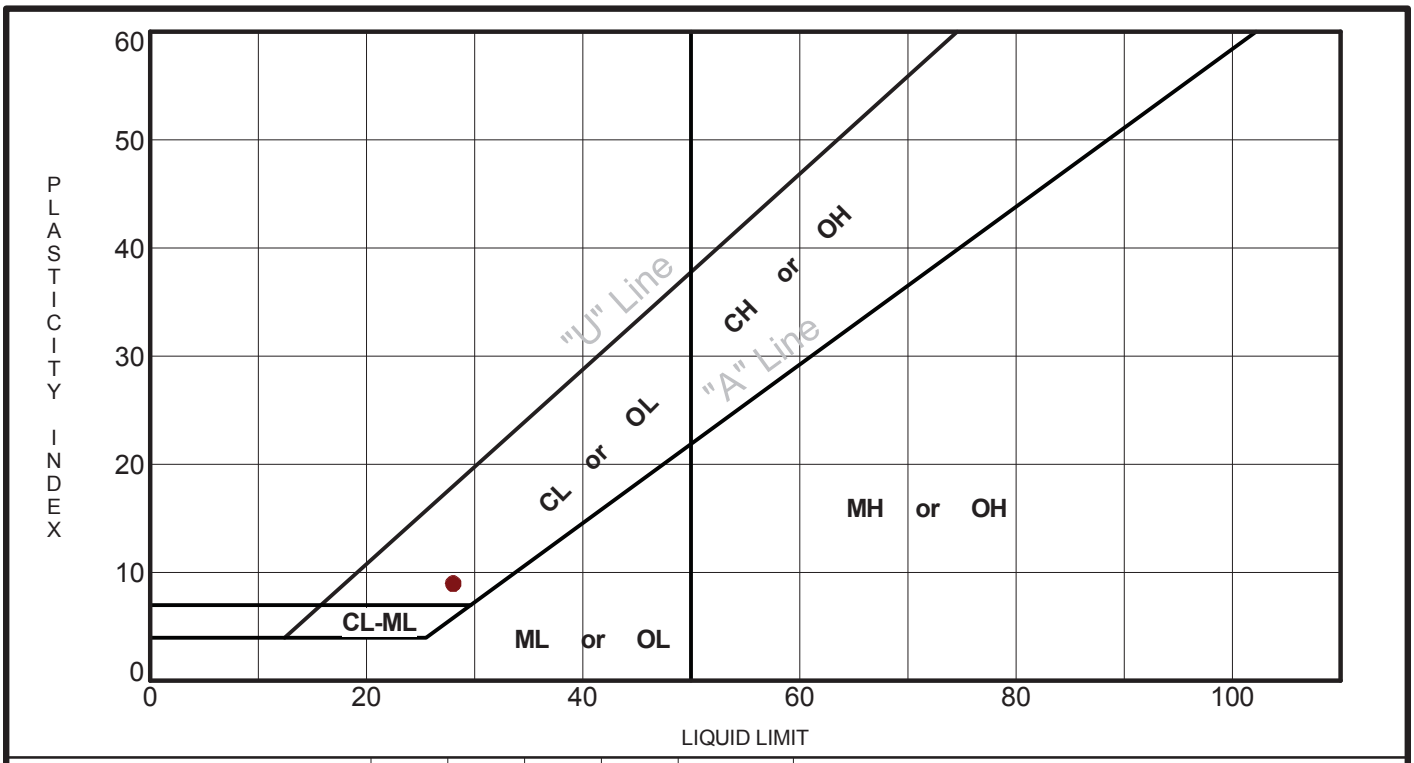

Boring ID	Depth	LL	PL	PI	Fines	USCS	Description
● **B-4**	**12.5**	**28**	**19**	**9**			CL - Lean clay

PROJECT: Google Pedestrian Bridge

SITE: 500 7th Ave S
Kirkland, Washington

Terracon
21905 64th Ave. W, Suite 100
Mountlake Terrace, Washington

PROJECT NUMBER: 81145002

CLIENT: SRMKII, LLC
Spokane, Washington

EXHIBIT: B-5

LABORATORY TESTS ARE NOT VALID IF SEPARATED FROM ORIGINAL REPORT. ATTERBERG LIMITS 81145002 BORINGLOGS 11FEB2014.GPJ FENCE PROJECT 1-8-13.GPJ 3/6/14

APPENDIX C
SUPPORTING DOCUMENTS

GENERAL NOTES

DRILLING & SAMPLING SYMBOLS:

SS:	Split Spoon – 1-$^3/_8$" I.D., 2" O.D., unless otherwise noted	HS:	Hollow Stem Auger
ST:	Thin-Walled Tube - 3" O.D., unless otherwise noted	PA:	Power Auger
RS:	Ring Sampler - 2.42" I.D., 3" O.D., unless otherwise noted	HA:	Hand Auger
DB:	Diamond Bit Coring - 4", N, B	RB:	Rock Bit
BS:	Bulk Sample or Auger Sample	WB:	Wash Boring or Mud Rotary

The number of blows required to advance a standard 2-inch O.D. split-spoon sampler (SS) the last 12 inches of the total 18-inch penetration with a 140-pound hammer falling 30 inches is considered the "Standard Penetration" or "N-value".

WATER LEVEL MEASUREMENT SYMBOLS:

WL:	Water Level	WS:	While Sampling	N/E:	Not Encountered
WCI:	Wet Cave in	WD:	While Drilling		
DCI:	Dry Cave in	BCR:	Before Casing Removal		
AB:	After Boring	ACR:	After Casing Removal		

Water levels indicated on the boring logs are the levels measured in the borings at the times indicated. Groundwater levels at other times and other locations across the site could vary. In pervious soils, the indicated levels may reflect the location of groundwater. In low permeability soils, the accurate determination of groundwater levels may not be possible with only short-term observations.

DESCRIPTIVE SOIL CLASSIFICATION: Soil classification is based on the Unified Soil Classification System. Coarse Grained Soils have more than 50% of their dry weight retained on a #200 sieve; their principal descriptors are: boulders, cobbles, gravel or sand. Fine Grained Soils have less than 50% of their dry weight retained on a #200 sieve; they are principally described as clays if they are plastic, and silts if they are slightly plastic or non-plastic. Major constituents may be added as modifiers and minor constituents may be added according to the relative proportions based on grain size. In addition to gradation, coarse-grained soils are defined on the basis of their in-place relative density and fine-grained soils on the basis of their consistency.

CONSISTENCY OF FINE-GRAINED SOILS

Unconfined Compressive Strength, Qu, psf	Standard Penetration or N-value (SS) Blows/Ft.	Consistency
< 500	0-1	Very Soft
500 – 1,000	2-3	Soft
1,001 – 2,000	4-6	Medium Stiff
2,001 – 4,000	7-12	Stiff
4,001 – 8,000	13-26	Very Stiff
8,000+	26+	Hard

RELATIVE DENSITY OF COARSE-GRAINED SOILS

Standard Penetration or N-value (SS) Blows/Ft.	Ring Sampler (RS) Blows/Ft.	Relative Density
0 – 3	0-6	Very Loose
4 – 9	7-18	Loose
10 – 29	19-58	Medium Dense
30 – 49	59-98	Dense
50+	99+	Very Dense

RELATIVE PROPORTIONS OF SAND AND GRAVEL

Descriptive Term(s) of other Constituents	Percent of Dry Weight
Trace	< 15
With	15 – 30
Modifier	> 30

GRAIN SIZE TERMINOLOGY

Major Component of Sample	Particle Size
Boulders	Over 12 in. (300mm)
Cobbles	12 in. to 3 in. (300mm to 75 mm)
Gravel	3 in. to #4 sieve (75mm to 4.75 mm)
Sand	#4 to #200 sieve (4.75mm to 0.075mm)
Silt or Clay	Passing #200 Sieve (0.075mm)

RELATIVE PROPORTIONS OF FINES

Descriptive Term(s) of other Constituents	Percent of Dry Weight
Trace	< 5
With	5 – 12
Modifier	> 12

PLASTICITY DESCRIPTION

Term	Plasticity Index
Non-plastic	0
Low	1-10
Medium	11-30
High	30+

UNIFIED SOIL CLASSIFICATION SYSTEM

Criteria for Assigning Group Symbols and Group Names Using Laboratory Tests [A]				Soil Classification	
				Group Symbol	Group Name [B]
Coarse Grained Soils: More than 50% retained on No. 200 sieve	**Gravels:** More than 50% of coarse fraction retained on No. 4 sieve	**Clean Gravels:** Less than 5% fines [C]	Cu ≥ 4 and 1 ≤ Cc ≤ 3 [E]	GW	Well-graded gravel [F]
			Cu < 4 and/or 1 > Cc > 3 [E]	GP	Poorly graded gravel [F]
		Gravels with Fines: More than 12% fines [C]	Fines classify as ML or MH	GM	Silty gravel [F,G,H]
			Fines classify as CL or CH	GC	Clayey gravel [F,G,H]
	Sands: 50% or more of coarse fraction passes No. 4 sieve	**Clean Sands:** Less than 5% fines [D]	Cu ≥ 6 and 1 ≤ Cc ≤ 3 [E]	SW	Well-graded sand [I]
			Cu < 6 and/or 1 > Cc > 3 [E]	SP	Poorly graded sand [I]
		Sands with Fines: More than 12% fines [D]	Fines classify as ML or MH	SM	Silty sand [G,H,I]
			Fines classify as CL or CH	SC	Clayey sand [G,H,I]
Fine-Grained Soils: 50% or more passes the No. 200 sieve	**Silts and Clays:** Liquid limit less than 50	**Inorganic:**	PI > 7 and plots on or above "A" line [J]	CL	Lean clay [K,L,M]
			PI < 4 or plots below "A" line [J]	ML	Silt [K,L,M]
		Organic:	Liquid limit - oven dried / Liquid limit - not dried < 0.75	OL	Organic clay [K,L,M,N]
					Organic silt [K,L,M,O]
	Silts and Clays: Liquid limit 50 or more	**Inorganic:**	PI plots on or above "A" line	CH	Fat clay [K,L,M]
			PI plots below "A" line	MH	Elastic Silt [K,L,M]
		Organic:	Liquid limit - oven dried / Liquid limit - not dried < 0.75	OH	Organic clay [K,L,M,P]
					Organic silt [K,L,M,Q]
Highly organic soils:	Primarily organic matter, dark in color, and organic odor			PT	Peat

A Based on the material passing the 3-in. (75-mm) sieve

B If field sample contained cobbles or boulders, or both, add "with cobbles or boulders, or both" to group name.

C Gravels with 5 to 12% fines require dual symbols: GW-GM well-graded gravel with silt, GW-GC well-graded gravel with clay, GP-GM poorly graded gravel with silt, GP-GC poorly graded gravel with clay.

D Sands with 5 to 12% fines require dual symbols: SW-SM well-graded sand with silt, SW-SC well-graded sand with clay, SP-SM poorly graded sand with silt, SP-SC poorly graded sand with clay

E $Cu = D_{60}/D_{10}$ $Cc = \frac{(D_{30})^2}{D_{10} \times D_{60}}$

F If soil contains ≥ 15% sand, add "with sand" to group name.

G If fines classify as CL-ML, use dual symbol GC-GM, or SC-SM.

H If fines are organic, add "with organic fines" to group name.

I If soil contains ≥ 15% gravel, add "with gravel" to group name.

J If Atterberg limits plot in shaded area, soil is a CL-ML, silty clay.

K If soil contains 15 to 29% plus No. 200, add "with sand" or "with gravel," whichever is predominant.

L If soil contains ≥ 30% plus No. 200 predominantly sand, add "sandy" to group name.

M If soil contains ≥ 30% plus No. 200, predominantly gravel, add "gravelly" to group name.

N PI ≥ 4 and plots on or above "A" line.

O PI < 4 or plots below "A" line.

P PI plots on or above "A" line.

Q PI plots below "A" line.

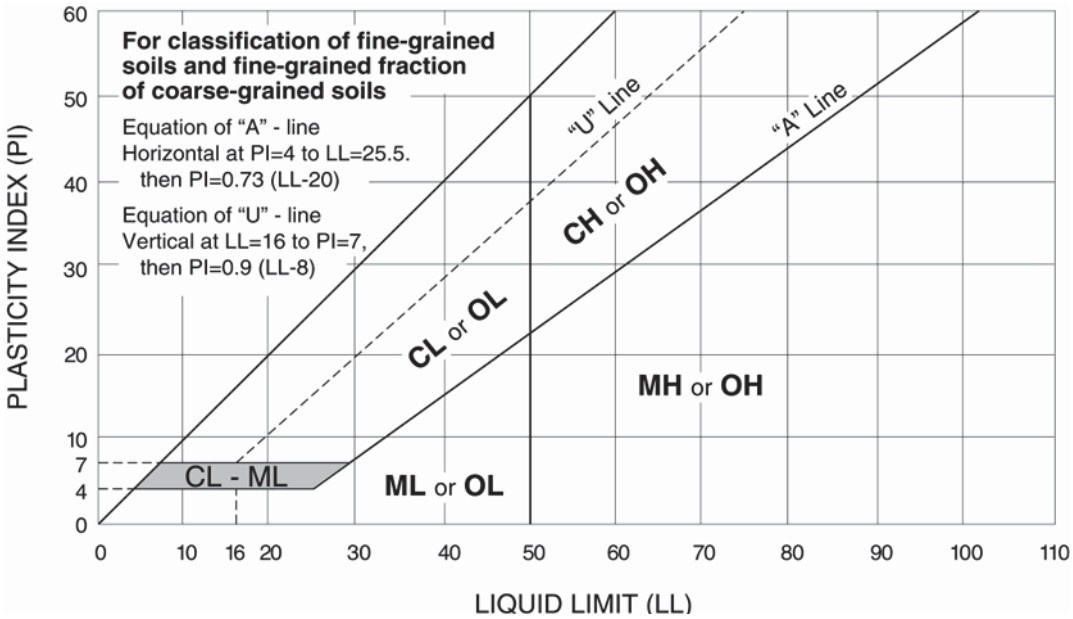

APPENDIX D
SUPPORTING DOCUMENTS

Exhibit D-1. Soil Properties									
Layer	USCS Class	Soil Model	Depth	Effective Unit Weight	Drained Cohesion	Drained Friction Angle	Undrained Shear Strength	Lateral k-modulus	ε_{50}
			ft	pcf	psf	degrees	psf	pci	
1	SP	1*	0-4	120	0	31	--	30	--
2	SM	1*	4-8.5	120	0	31	--	30	--
3	ML	2*	8.5-25**	130	200	31	4500	1000	0.005
4	ML	2*	25-40**	125	200	29	3000	500	0.007

* Soil Model Legend

1 Sand (Reese)

2 Silt (c-phi)

**Properties inferred from borings adjacent to the project for depths in exceedance of 21.5 feet

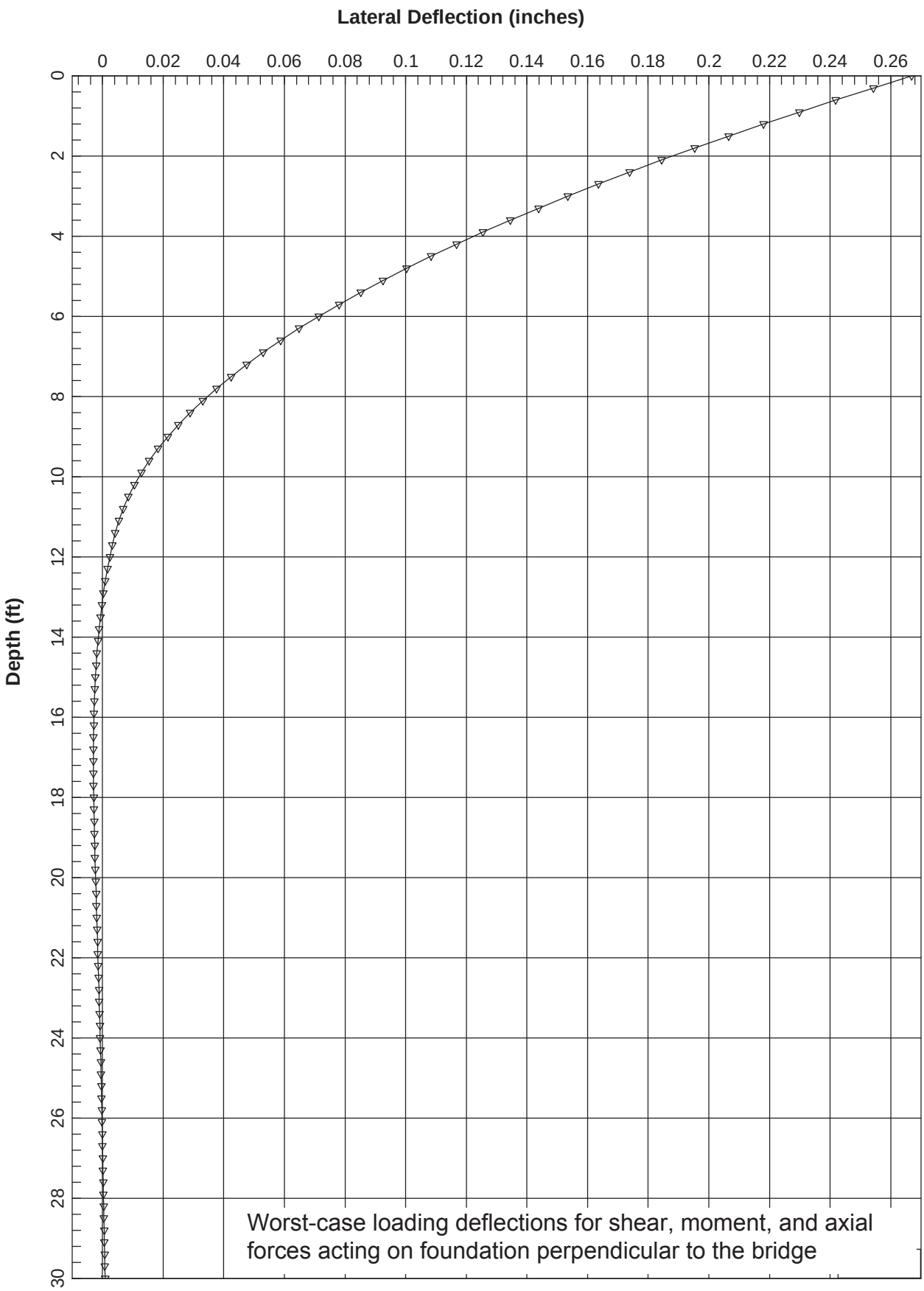

Worst-case loading deflections for shear, moment, and axial forces acting on foundation perpendicular to the bridge

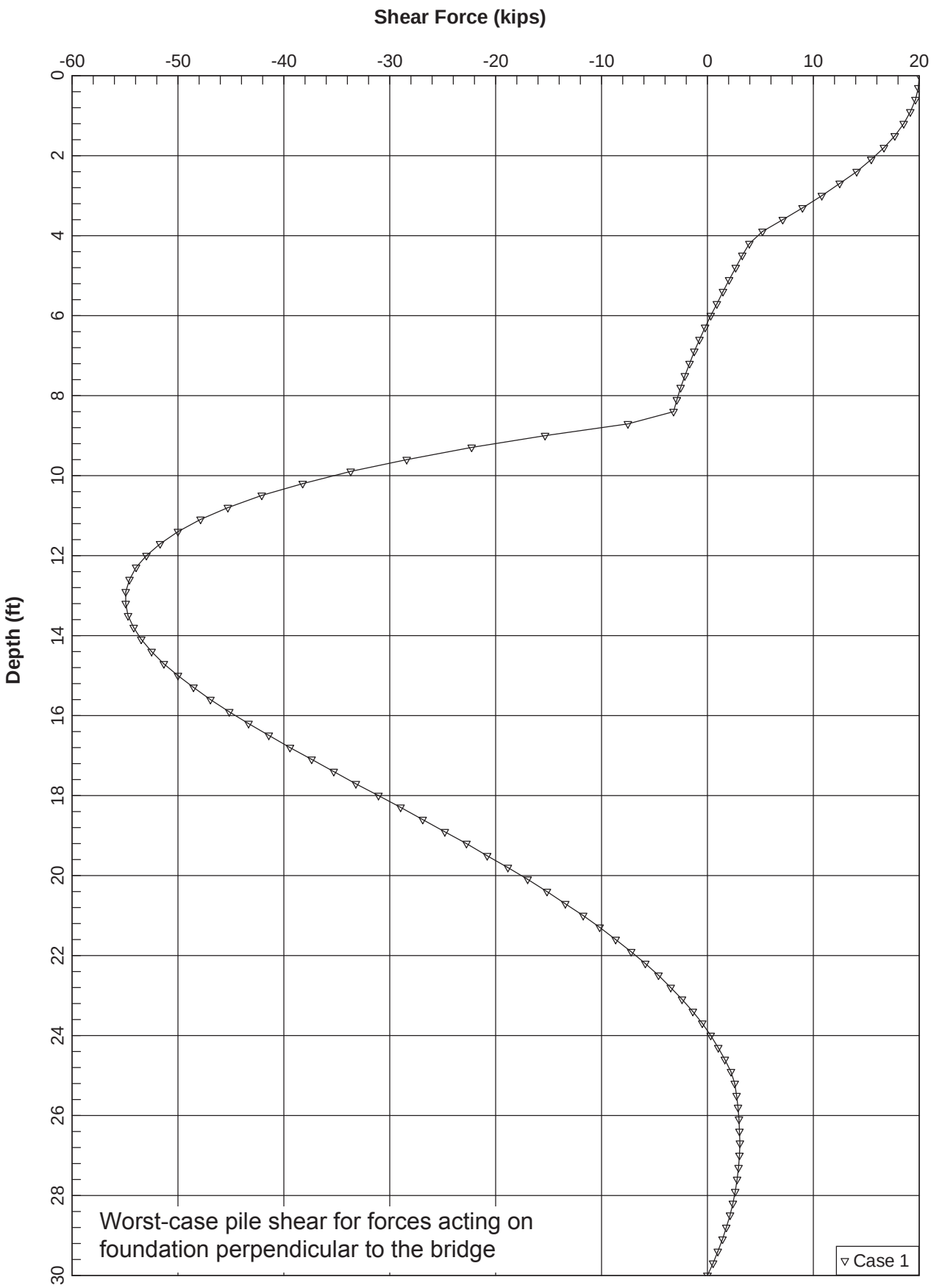
Shear Force (kips)
-60
-50
-40
-30
-20
-10
0
10
20
Depth (ft)
0
2
4
6
8
10
12
14
16
18
20
22
24
26
28
30
Worst-case pile shear for forces acting on foundation perpendicular to the bridge
Case 1

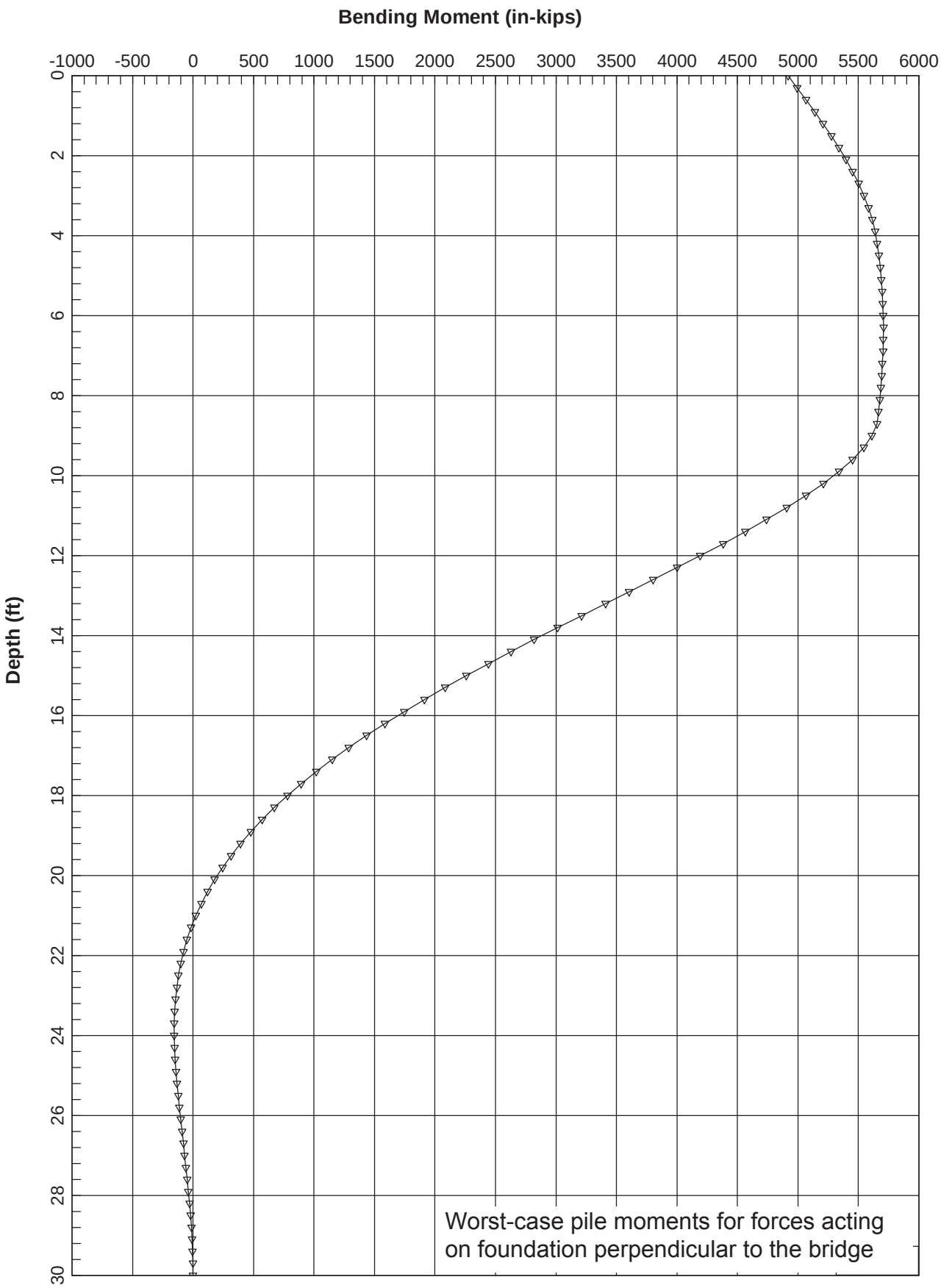
Bending Moment (in-kips)
-1000
-500
0
500
1000
1500
2000
2500
3000
3500
4000
4500
5000
5500
6000
Depth (ft)
0
2
4
6
8
10
12
14
16
18
20
22
24
26
28
30
Worst-case pile moments for forces acting on foundation perpendicular to the bridge

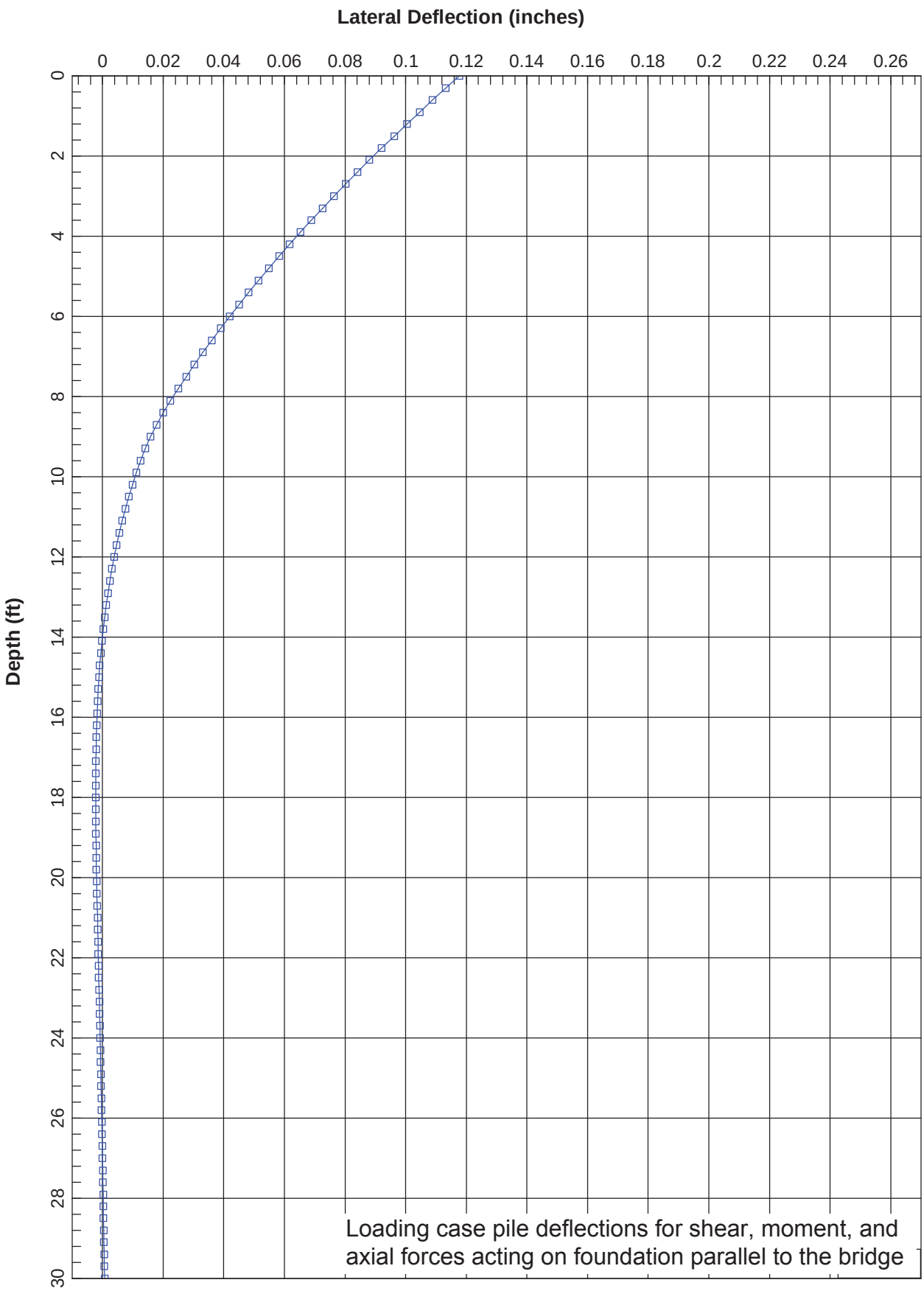
Lateral Deflection (inches)
0
0.02
0.04
0.06
0.08
0.1
0.12
0.14
0.16
0.18
0.2
0.22
0.24
0.26
Depth (ft)
0
2
4
6
8
10
12
14
16
18
20
22
24
26
28
30
Loading case pile deflections for shear, moment, and axial forces acting on foundation parallel to the bridge

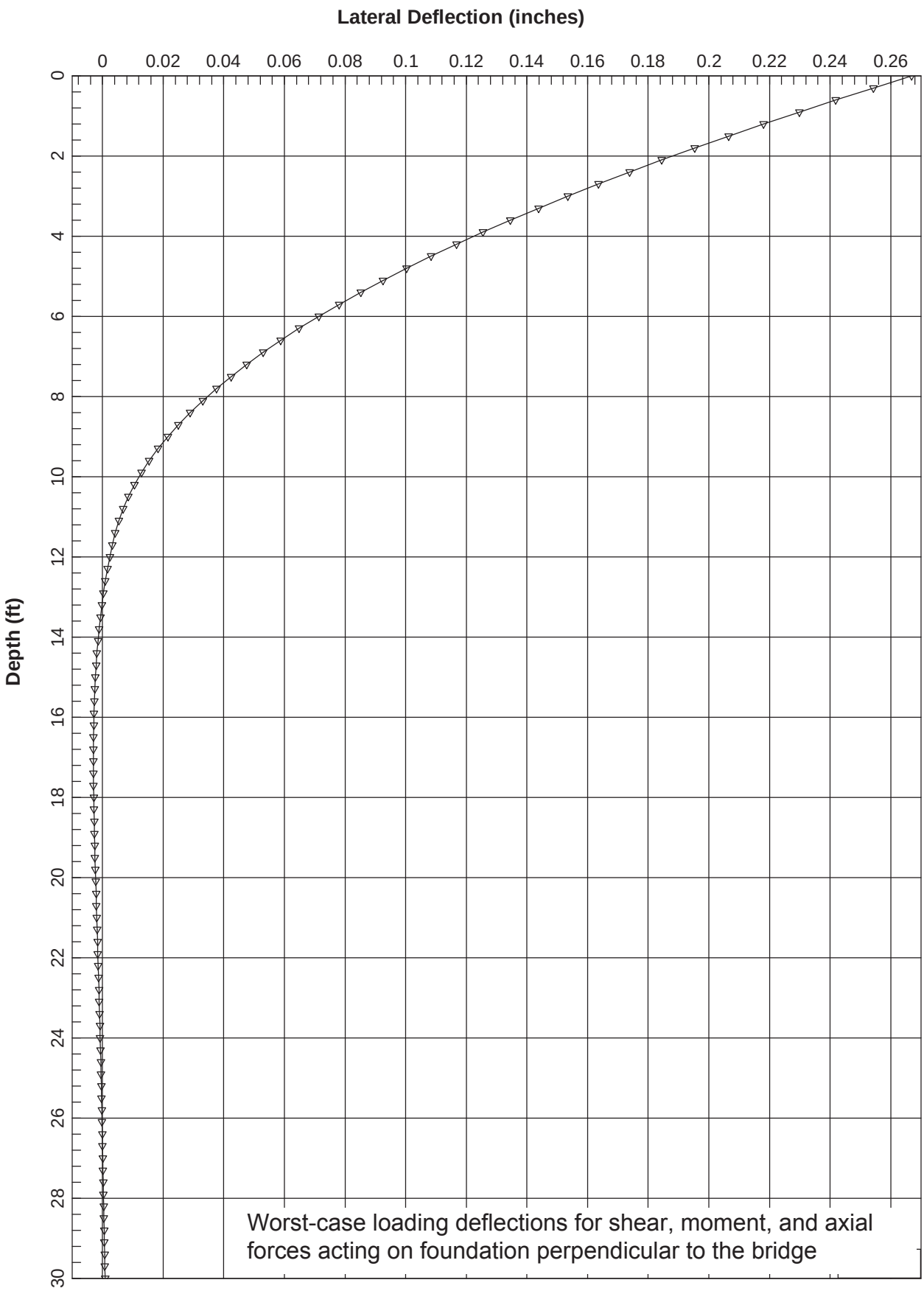

Worst-case loading deflections for shear, moment, and axial forces acting on foundation perpendicular to the bridge

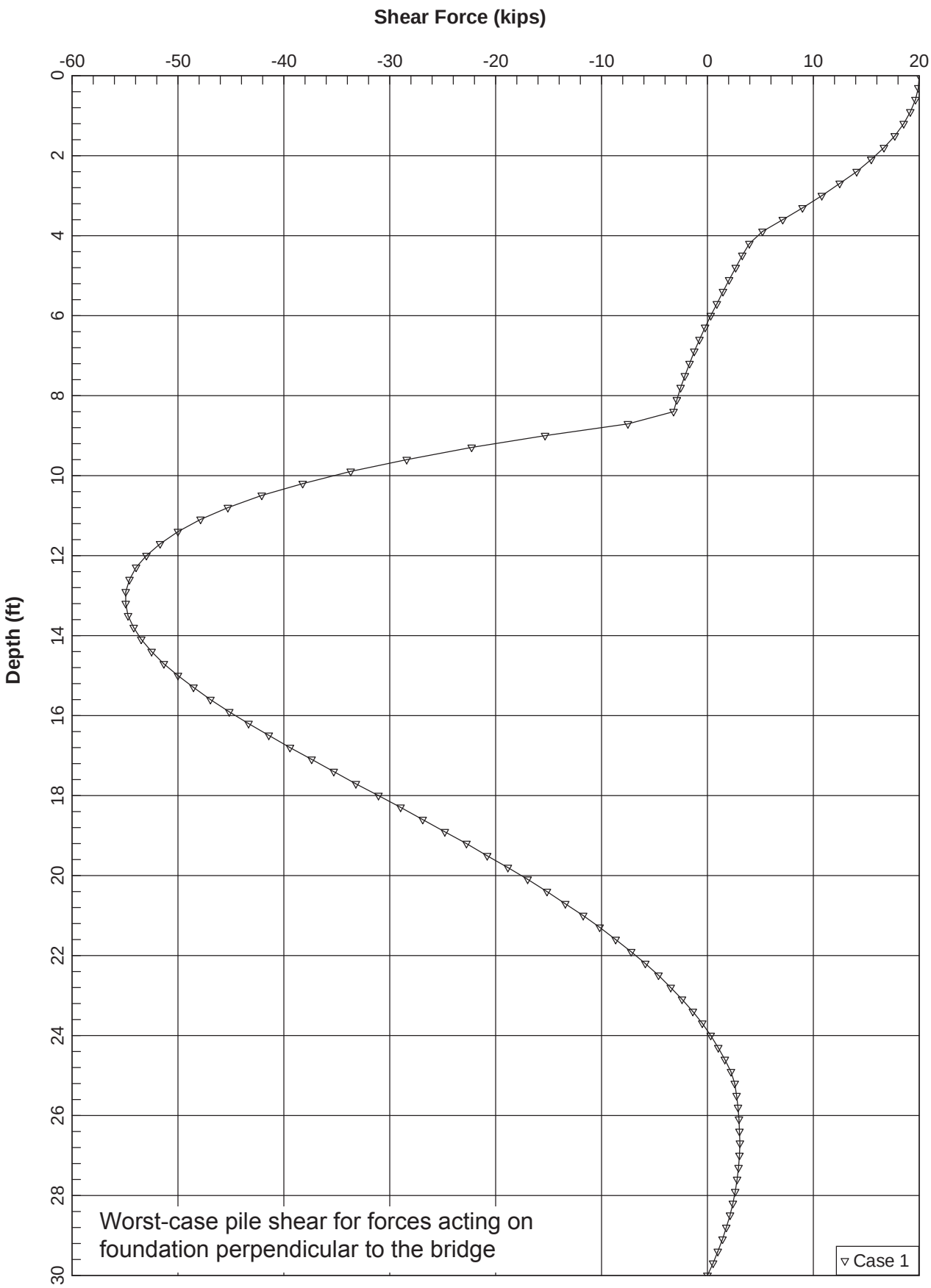
Shear Force (kips)
-60
-50
-40
-30
-20
-10
0
10
20
Depth (ft)
0
2
4
6
8
10
12
14
16
18
20
22
24
26
28
30
Worst-case pile shear for forces acting on foundation perpendicular to the bridge
Case 1

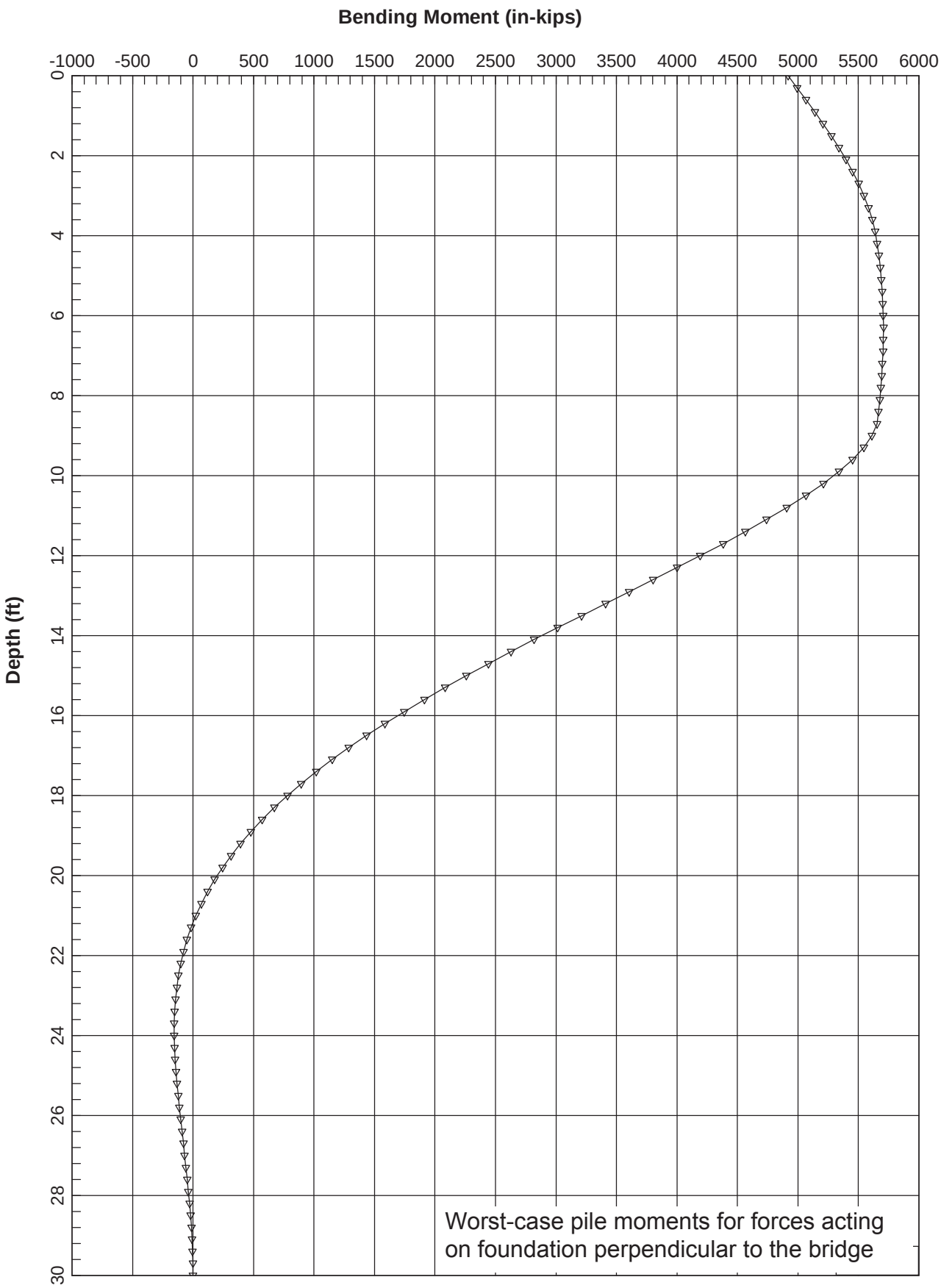
Bending Moment (in-kips)
-1000
-500
0
500
1000
1500
2000
2500
3000
3500
4000
4500
5000
5500
6000
Depth (ft)
0
2
4
6
8
10
12
14
16
18
20
22
24
26
28
30
Worst-case pile moments for forces acting on foundation perpendicular to the bridge

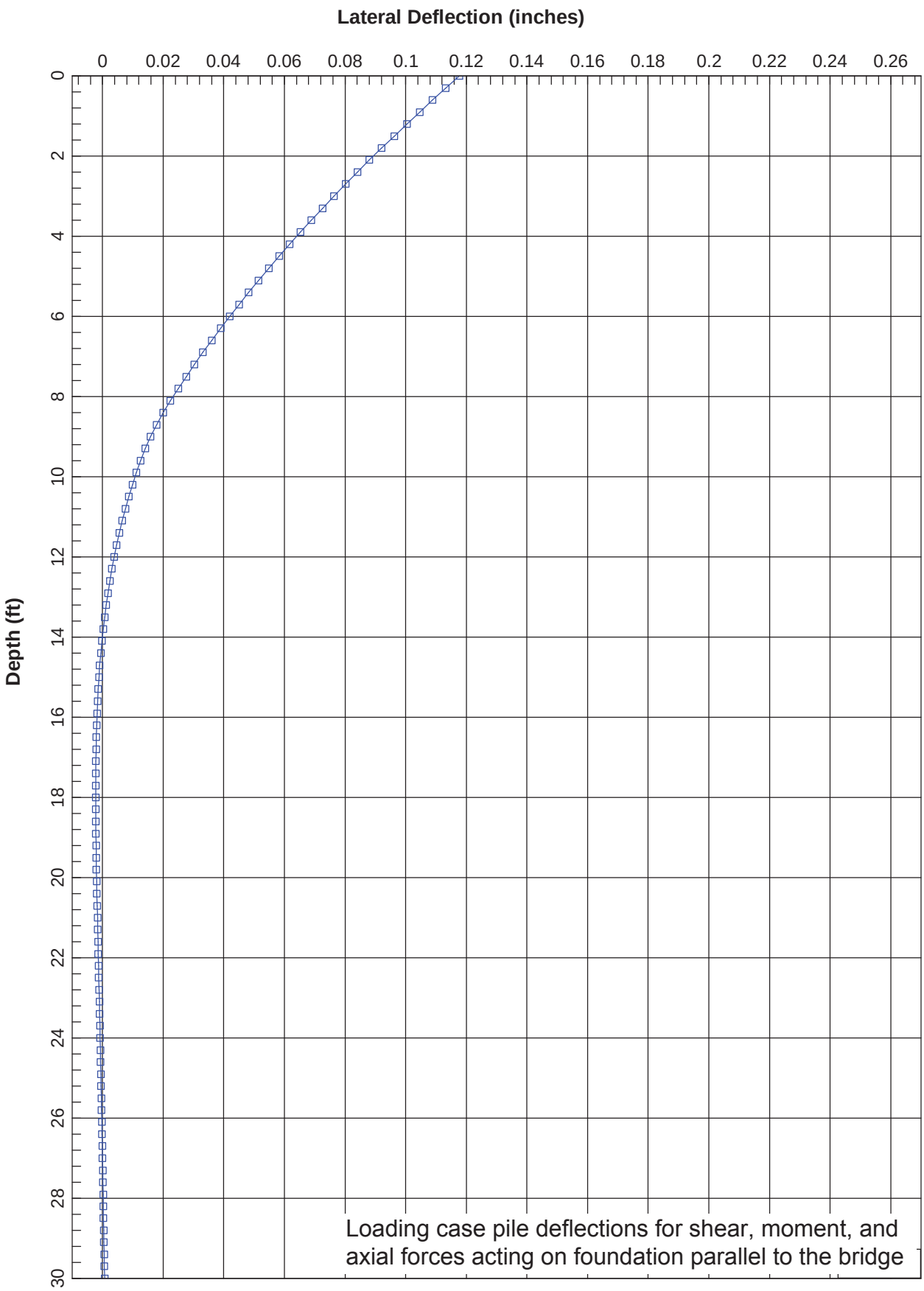
Lateral Deflection (inches)
0
0.02
0.04
0.06
0.08
0.1
0.12
0.14
0.16
0.18
0.2
0.22
0.24
0.26
Depth (ft)
0
2
4
6
8
10
12
14
16
18
20
22
24
26
28
30
Loading case pile deflections for shear, moment, and axial forces acting on foundation parallel to the bridge

CITY OF KIRKLAND
123 FIFTH AVENUE
KIRKLAND, WA 98033-6189
425.587.3225

Mitigated Determination of Nonsignificance

CASE #: SEP12-01379

DATE ISSUED: September 19, 2013

DESCRIPTION OF PROPOSAL: Environmental review for a new office building (Google Phase II).

APPLICANT: Dave Tomson

PROJECT LOCATION: 451 7TH AVE S

LEAD AGENCY IS THE CITY OF KIRKLAND

The lead agency for this proposal has determined that it does not have a probable significant adverse impact on the environment. An environmental impact statement (EIS) is not required under RCW 43.21.030 (2) (c). This decision was made after review of a completed environmental checklist and other information on file with the lead agency. This information is available to the public upon request.

This determination is issued under 197-11-340 (2); the lead agency will not act on this proposal for 14 days from the date above. Comments must be submitted by 5:00 p.m. on October 3, 2013

Responsible Official: _____ 9/17/2013

Eric Shields, Director
Department of Planning and Community Development
425-587-3225

Date

Address: City of Kirkland
123 Fifth Avenue
Kirkland, WA 98033-6189

You may appeal this determination to the Planning Department at Kirkland City Hall, 123 Fifth Avenue, Kirkland, WA 98033 no later than 5:00 p.m., October 3, 2013 by WRITTEN NOTICE OF APPEAL.

You should be prepared to make specific factual objections. Contact the Planning Department at 425-587-3225 to read or ask about the procedures for SEPA appeals.

Please reference case # SEP12-01379

Publish in the Seattle Times (date): September 24, 2013

Distribute this form with a copy of the checklist to the following:

Environmental Review Section
Department of Ecology
PO Box 47703
Olympia, WA 98504-7703

Attn: Environmental Reviewer
Muckleshoot Indian Tribe Fisheries Division
39015 172nd Avenue SE
Auburn, WA 98092

Gary Kriedt
King County Metro Transit Environmental Planning
201 South Jackson Street, MS KSC TR-0431
Seattle, WA 98104-3856

Ramin Pazooki
Developer Services
Washington State Department of Transportation
15700 Dayton Ave. N. MS 240
PO Box 330310
Seattle, WA 98133-9710

Owner: Ultra Corp

MITIGATING MEASURES INCORPORATED INTO THE PROPOSAL:

1. Cabinet signs are prohibited. Internally illuminated signs with channel letters and/or signs with opaque sign faces, except for lettering, shall be allowed.
2. Install a traffic signal at the intersection of 6th`Street South/Kirkland Way with exclusive left-turn lanes for all approaches per City guidelines. The City shall install the signal and the applicant shall pay for all costs including but not limited to engineering, construction, and right-of-way acquisition.
3. Install a traffic signal at the intersection of 6th Street South/9th Avenue South per City guidelines. The City shall install the signal and the applicant shall pay for all costs including but not limited to engineering, construction, and right-of-way acquisition.
4. Construct the missing link of sidewalk on the west side of 6th Street South between Kirkland Avenue and the Google campus per City guidelines. In addition, construct a crosswalk near 5th Place South as part of the sidewalk construction.
5. Install roadway signs to restrict commercial trucks from accessing the site from 5th Place South.
6. Construct the missing segment of sidewalk along 7th Avenue South between State Street and the project frontage per City guidelines.
7. Construct the necessary traffic barrier to exclude project traffic from using 7th Avenue South, west of the project site according to Public Works, AASHTO, and MUTCD design guidelines.
8. Install an at-grade crossing across the Cross Kirkland Corridor trail consistent with a design approved by the City to meet Public Works, AASHTO, and MUTCD design guidelines. The crossing design shall take into account potential future signalization.
9. Submit a final Transportation Management Plan (TMP) to be recorded with King County. The TMP shall include at a minimum the following items:

a. A minimum of 120 preferential HOV parking stalls to be provided near the building entrances.
b. A minimum of 80 bicycle racks, 80 lockers, and shower/changing facilities to be provided for bike commuters.

cc: Case # BNR13-03493

Distributed to agencies along with a copy of the checklist (see attached).

Distributed By: _____ Date: 9/19/13

Additional project and SEPA information, including the staff memo and traffic study can be found at Kirkland City Hall - Planning Dept. and on the City website:
http://www.kirklandwa.gov/depart/planning/Development/Google_Phase_II.htm