Tab 4.0

4.0 ANALYSIS AND DESIGN

4.1 Existing Site Hydrology

On-site soils are sandy loam, Norma (No) classified as till soils. The site is slopes to the northwest with slopes ranging from 3percent to 30 percent. The site is currently vacant, undeveloped, and partially treed.

Currently, there is no existing on-site storm drain system. Runoff flows to the north and northwest toward the northern property line and draining into 120th Avenue N.E. Ultimately, the existing drainage system within 120th Avenue N.E. consists of a series of open ditches, catch basins, and pipes. This system discharges to a point north of the intersection of 120th Avenue N.E. and N.E. 90th Street, which is the upstream inlet to Forbes Ditch. This ditch conveys the runoff from the North Forbes Lake drainage basin

The table below describes the existing basin and land cover:

BASIN NAME	BASIN USE	TOTAL AREA (AC)	PERVIOUS	IMPERVIOUS
PRE	UNDEVELOPED LOT	0.71	0.71 ACRE	0.00 ACRE

Thee following table lists the flows for the existing predeveloped basin and event period as calculated by KCRTS.

BASIN NAME	Q2	Q10	Q25	Q100
PRE	0.02 cfs	0.03 cfs	0.045 cfs	0.057 cfs

4.2 Developed Site Hydrology

The project proposes the construction of a parking lot with landscaping, stormwater facilities, sidewalk connection, and relocation of an existing fire hydrant.

The figure below describes the drainage basin in the developed condition:

BASIN NAME	BASIN USE	TOTAL AREA (AC)	TILL GRASS	IMPERVIOUS
DEV	PARKING LOT, LANDSCAPE	0.71	0.23 ACRE	0.48 ACRE

The following table lists the flows for the proposed basin and event period as calculated by KCRTS.

BASIN NAME	Q2	Q10	Q25	Q100
DEV	0.14 cfs	0.16 cfs	0.18 cfs	0.27cfs

4.3 Flow Control Design

The proposed site involves the addition of asphalt and concrete pavements. To mitigate for increased runoff, the project has applied Conservation Flow Control, resulting in a required storage volume of 9,095 cubic feet. Detention storage will be provided in a underground detention tank designed pursuant to the 2009 KCWSWDM. The detention tank will be approximately 1420 feet of 36-inch pipe. Please refer to calculations within this Section.

4.4 Water Quality

The proposed site involves the addition of asphalt and concrete pavements, which are classified as pollution generating surfaces. A two-treatment train water quality system of two StormFilter manholes, one with ZPG media and one with CSF are proposed to provide water quality for Enhanced Basic Treatment in accordance with City of Kirkland Addendum to the 2009 KCWSWD.

The Stormfilter manholes have been designed to meet the Enhanced Basic Menu. The first proposed Stormfilter consists of a 48-inch Contech manhole with 3 ZPG filter media cartridges. The second Stormfilter consists of a 48-inch Contech manhole with 3 CSF filter media cartridges. Both of these cartridge systems were designed by Contech for mass loading requirements, therefore there is only one calculation attached which was used to size both manholes. Please refer to calculations within this Section.

4.5 Low Impact Development

The City of Kirkland requires an evaluation of the applicability of utilizing LID BMPs at the site. Due to the existing till soils and the high groundwater in the area, none of the LID BMP's are feasible on this site. A Policy D-11: Surface Water Adjustment Request has been submitted to the City of Kirkland to allow this development without the required LID BMP's. Please refer to the Evaluation Worksheet and Calculations within this section.

EXISTING CONDITIONS MAP

ENCLOSURE 4

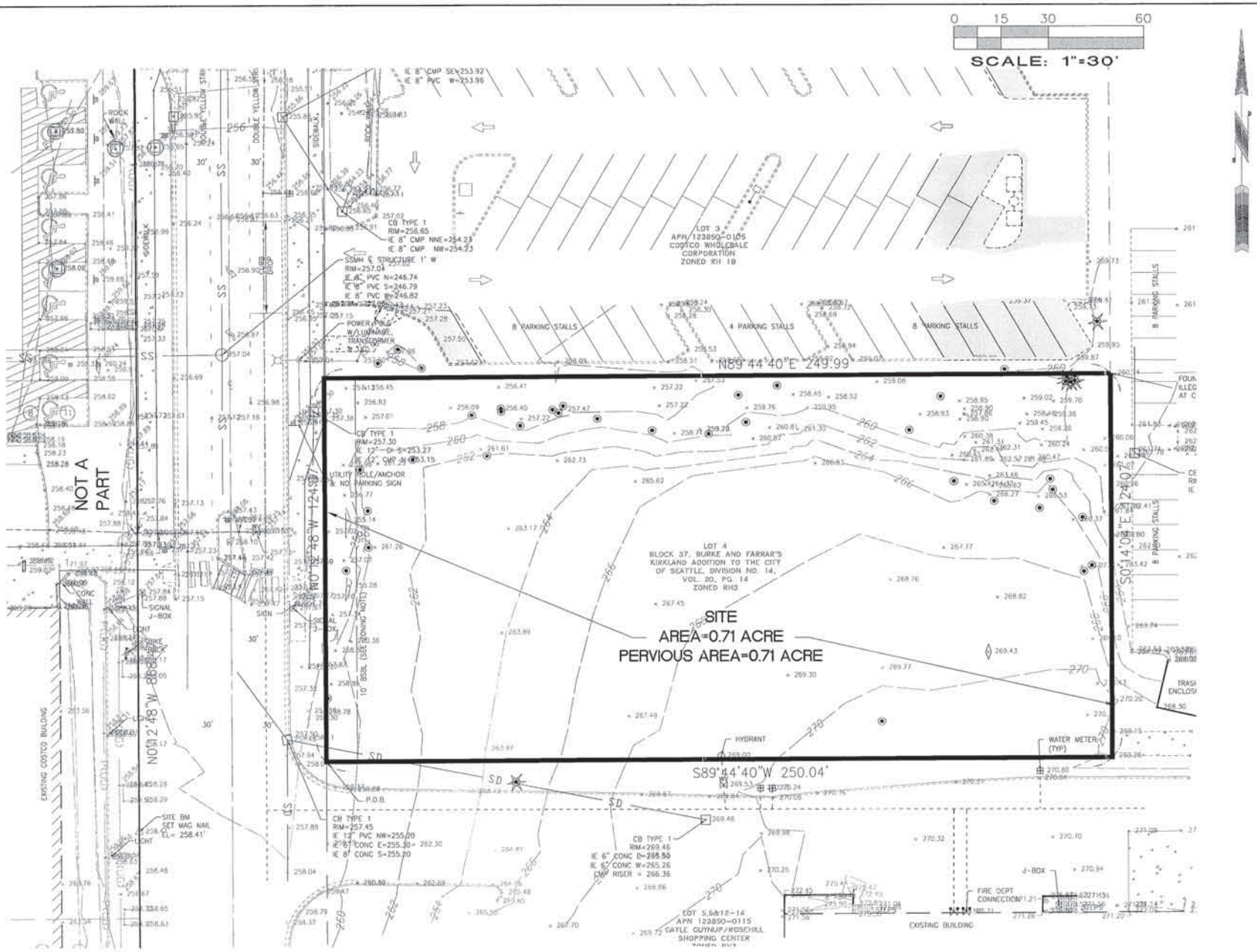

No.	Date	By	Chkd.	Appr.	Revision

Title: EXISTING CONSITIONS MAP
GUYNUP PARCEL

For: COSTCO WHOLESALE CORP.
999 LAKE DRIVE

Scale:	
Horizontal	1"=30'
Vertical	NA

Designed —
Drawn —
Checked —
Approved —
Date —

BARGHAUSEN CONSULTING ENGINEERS, INC.
18215 72ND AVENUE SOUTH
KENT, WA 98032
(425)251-6222
(425)251-8782 FAX
CIVIL ENGINEERING, LAND PLANNING, SURVEYING, ENVIRONMENTAL SERVICES

Job Number 6222

Sheet 1 of 1

DEVELOPED CONDITIONS MAP

ENCLOSURE 4

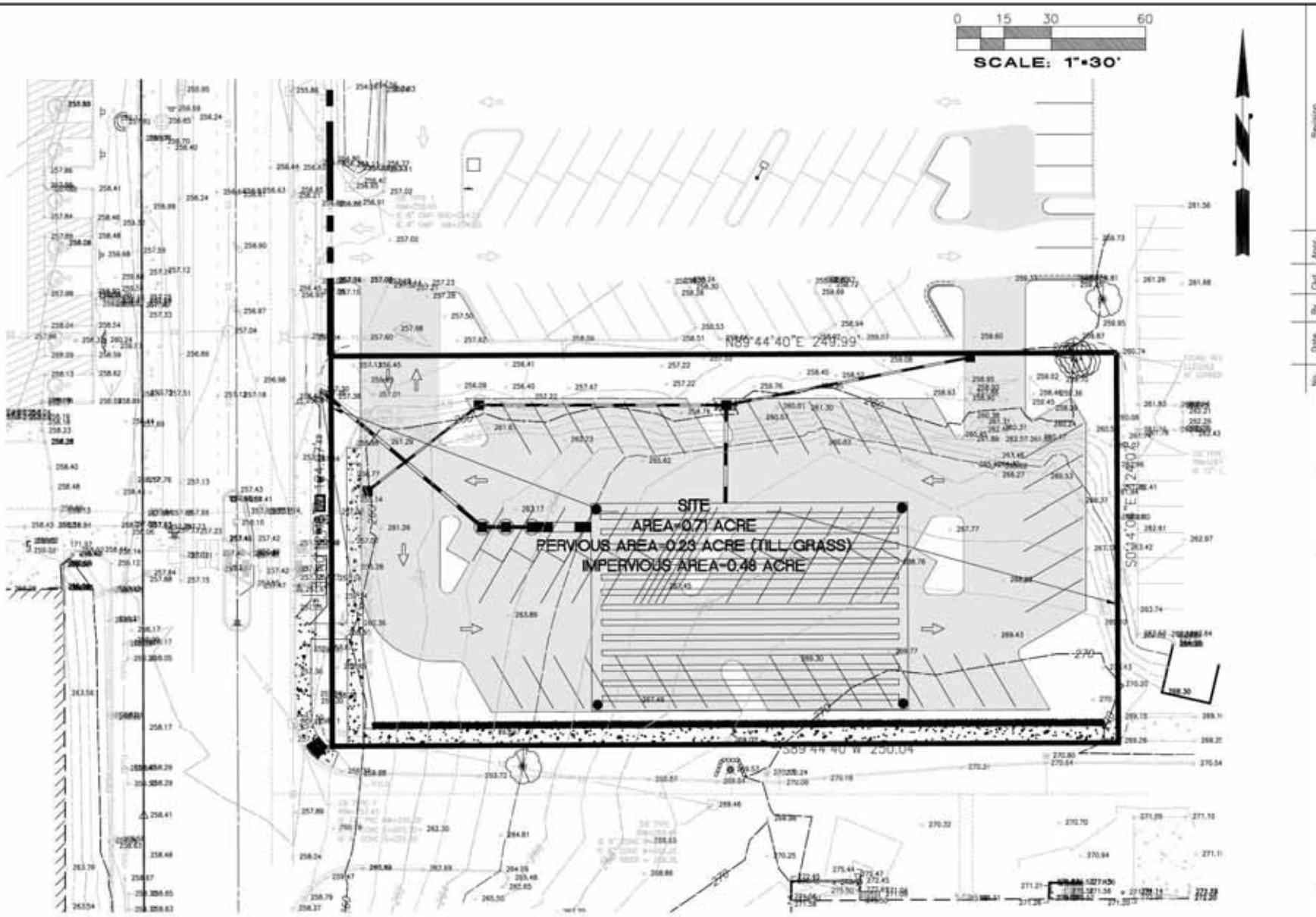

No.	Date	By	Chk.	Appr.	Revision

Title: DEVELOPED CONSITIONS MAP

For: COSTCO WHOLESALE CORP.
999 LAKE DRIVE

Scale: Horizontal 1"=30' Vertical NA

Designed — Drawn — Checked — Approved — Date —

BARGHAUSEN CONSULTING ENGINEERS, INC.
18215 72ND AVENUE SOUTH
KENT, WA 98032
(425)251-6222
(425)251-8782 FAX
CIVIL ENGINEERING, LAND PLANNING, SURVEYING, ENVIRONMENTAL SERVICES

Job Number 6222

Sheet 1 of 1

GRADING AND STORM DRAINAGE PLAN

1"=20'

SITE CONSTRUCTION SCHEDULE

1. NEW ASPHALT PAVEMENT SEE DETAIL SHEET 1/C5
2. NEW CONCRETE BARRIER CURB. SEE DETAIL SHEET 3/C5
3. NEW LANDSCAPE W/IRRIGATION PER LANDSCAPE PLANS
4. SAWCUT LINE SHALL BE A SMOOTH STRAIGHT LINE
5. NEW DOUBLE LINE PARKING STALL PER COSTCO DEVELOPMENT REQUIREMENTS
6. NEW DIRECTIONAL ARROWS PER DETAIL SHEET 4/C5
7. NEW CONCRETE SIDEWALK PER DETAIL SHEET 3/C5
8. NEW CART CORRAL PER COSTCO DEVELOPMENT REQUIREMENTS
9. RELOCATE FIRE HYDRANT. (PER CITY OF KIRKLAND STDS.)
10. ROCKERY PER DETAIL CK-R.16, ALSO SHEET C5.
11. CITY OF KIRKLAND SIDEWALK PER DETAIL SHEET C9
12. FRENCH DRAIN PER DETAIL SHEET C7
13. NEW ADA RAMP PER CDK STD DETAIL CK R.25A. SEE DETAIL SHEET C8
14. NEW CROSSWALK IMPROVEMENTS. REFER TO TRANSPO/GROUP DESIGN PLANS.

NOTE

1. PROPOSED SPOT ELEVATIONS ARE TO TOP OF PAVEMENT UNLESS OTHERWISE NOTED.
2. TC= TOP OF CURB ELEVATION FOR 2' WIDE (MIN) CURB WALL.
3. CONTRACTOR SHALL ADHERE TO SOILS ENGINEER RECOMMENDATIONS FOR PAVEMENT/SUBGRADE EXCAVATION, SUBGRADE PREPARATION, AND PLACEMENT OF STRUCTURAL FILL.
4. SEE CITY OF KIRKLAND TRENCH DETAIL ON SHEET C5 FOR ALL STORM DRAIN PIPE TRENCHING.

STORM DRAINAGE CONSTRUCTION KEYNOTES

1. NEW STORM DRAINAGE FACILITY. PER DETAILS SHEET C6
2. 40 LF 8" DI @ 0.50%
3. 76 LF 8" DI @ 0.50%
4. 76 LF 8" DI @ 0.50%
5. 31 LF 12" ADS N-12 @ 0.00%
6. 12 LF 36" ADS N-12 @ 0.00%
7. 5 LF 12" ADS N-12 @ 0.20%
8. 5 LF 12" ADS N-12 @ 0.20%
9. 85 LF 12" ADS N-12 @ 0.20%
   CONNECT TO EX. CB
   RIM=257.30
   IE=253.27 (EX. 12" S) - PLUG AND ABANDON PIPE
   IE=253.15 (12" N)
   NEW IE=253.15 (8" E)
10. 231 LF 4" PERFORATED PVC @ 3.72%
11. 198 LF 4" SOLID WALL PVC @ 4.20%

STORM DRAINAGE STRUCTURE TABLE

CB #1, TYPE 1
W/ STANDARD GRATE
RIM=260.03
IE= 258.36 (8" NE)

CB #2, TYPE 1
W/ STANDARD GRATE
RIM=260.59
IE=258.13 (8" SW, E)

CB #3, TYPE 1
W/STANDARD GRATE
RIM=261.42
IE=257.74 (8" W, E)
IE=257.41 (12" S)

CB #4, TYPE 1
W/STANDARD GRATE
RIM=260.57
IE=258.13 (8" SW)

CBMH, TYPE 2-54"
CONTROL STRUCTURE SEE SHEET C6
W/ SOLID LID
RIM=260.85
IE=257.40 (12" W, 36" E)

SF #1
STORMFILTER 48" MANHOLE W/13 [illegible] CARTRIDGES
RIM=260.87
IE IN=256.88 (12" E)
IE OUT=255.06 (12" W)
SEE DETAIL SHEET C7

SF #2
STORMFILTER 48" MANHOLE W/13 [illegible] CARTRIDGES
RIM=260.68
IE IN=255.08 (12" E)
IE OUT=253.26 (12" W)
SEE DETAIL SHEET C7

SDCO #1
RIM=258.75
IE=256.75 (4" W)

SDCO #2
RIM=262.15
IE=258.15 (4" N, E)

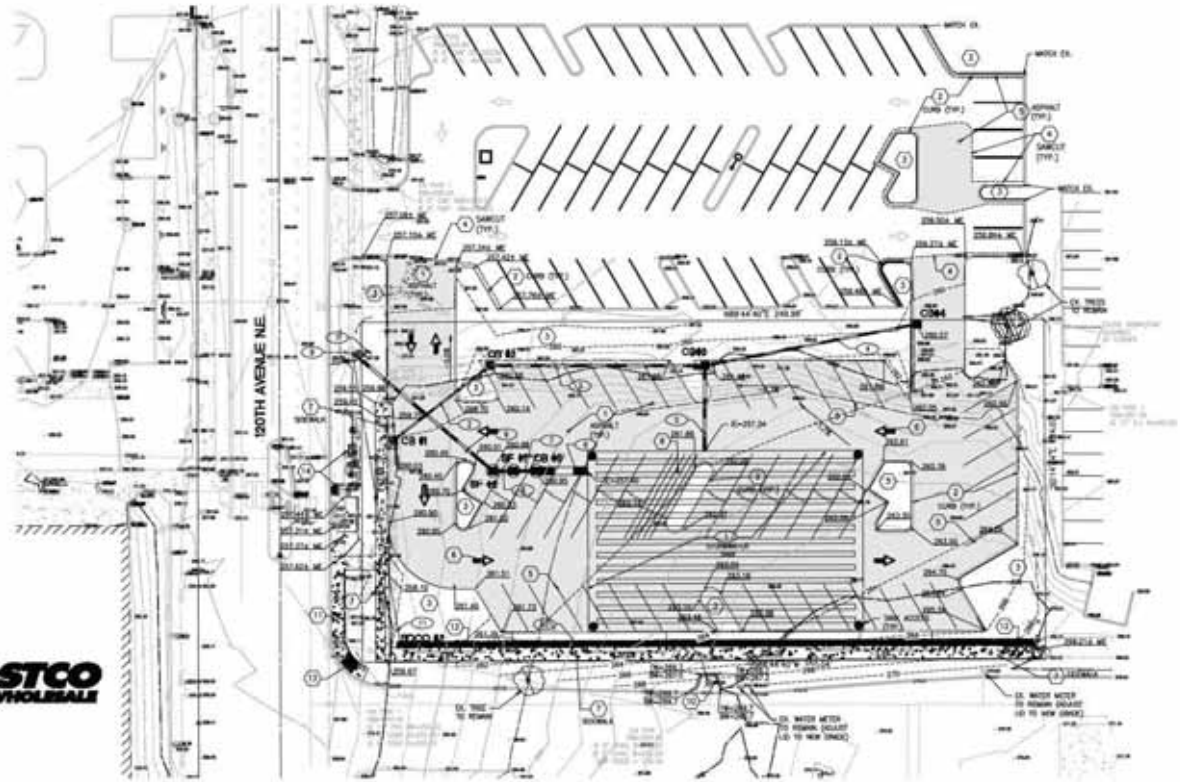

COSTCO WHOLESALE

APPROVED FOR CONSTRUCTION FOR THE CITY OF KIRKLAND

BY: _____ DATE: _____

Approval Expires 180 Days from Above Date

No.	Revision	Date	By	Chk'd
1	[illegible]	[illegible]	[illegible]	[illegible]

Title: GRADING AND STORM DRAINAGE PLAN
KIRKLAND, WA 98033
GUYNUP PARCEL

COSTCO
COSTCO WHOLESALE
999 LAKE DRIVE
ISSAQUAH, WASHINGTON 98027

For:

Scale: [illegible]
Designed: [illegible]
Drawn: [illegible]
Checked: [illegible]
Approved: [illegible]
Date: 10/30/13

BARGHAUSEN CONSULTING ENGINEERS INC
18215 72ND AVENUE SOUTH
KENT, WA 98032
(425)251-6222
(425)251-8782 FAX
CIVIL ENGINEERING, LAND PLANNING, SURVEYING, ENVIRONMENTAL SCIENCES

Job Number: 6222
Sheet: C4 of 8

DETENTION FACILITY SIZING

```
                                KCRTS Command
                                -------------
                            CREATE a new Time Series
                            ------------------------
                        Production of Runoff Time Series
    Project Location : Sea-Tac
     Computing Series : 6222pre.tsf      Predeveloped Condition
Regional Scale Factor :    1.00
            Data Type : Reduced
Creating Hourly Time Series File
                     Loading Time Series
File:C:\KC_SWDM\KC_DATA\STTF60R.rnf    :
Till Forest              0.71 acres
                    --------------
         Total Area :    0.71 acres
Peak Discharge:  0.057 CFS at  9:00 on Jan  9 in Year 8
                                        Storing Time Series
File:6222pre.tsf    :
                            Time Series Computed

                                KCRTS Command
                                -------------
                        Enter the Analysis TOOLS Module
                        -------------------------------

                            Analysis Tools Command
                            ----------------------
                      Compute PEAKS and Flow Frequencies
                      ----------------------------------
                                  Loading Stage/Discharge
curve:6222pre.tsf    :
          Flow Frequency Analysis
          -------------------------------------------------------
  Time Series File:6222pre.tsf
  Project Location:Sea-Tac
                              Frequencies & Peaks saved to
File:6222pre.pks    :

                            Analysis Tools Command
                            ----------------------
                     Compute Flow DURATION and Exceedence
                     ------------------------------------
                                        Loading Time Series
File:6222pre.tsf    :
Computing Flow Durations
                   Durations & Exceedence Probabilities to
File:6222TAR.dur    :

                            Analysis Tools Command
                            ----------------------
                            RETURN to Previous Menu
                            -----------------------
```

Guymup Parcel
ENCLOSURE 4
Predeveloped Flows

Flow Frequency Analysis
Time Series File:6222pre.tsf
Project Location:Sea-Tac

---Annual Peak Flow Rates---			-----Flow Frequency Analysis-------			
Flow Rate (CFS)	Rank	Time of Peak	- - Peaks - - (CFS)	Rank	Return Period	Prob
0.045	2	2/09/01 18:00	0.057	1	100.00	0.990
0.012	7	1/06/02 3:00	0.045	2	25.00	0.960
0.033	4	2/28/03 3:00	0.035	3	10.00	0.900
0.001	8	3/24/04 20:00	0.033	4	5.00	0.800
0.020	6	1/05/05 8:00	0.029	5	3.00	0.667
0.035	3	1/18/06 21:00	0.020	6	2.00	0.500
0.029	5	11/24/06 4:00	0.012	7	1.30	0.231
0.057	1	1/09/08 9:00	0.001	8	1.10	0.091
Computed Peaks			0.053		50.00	0.980

```
                                KCRTS Command
                                -------------
                            CREATE a new Time Series
                            ------------------------
                        Production of Runoff Time Series
    Project Location : Sea-Tac
     Computing Series : 6222dev.tsf      Developed Condition
Regional Scale Factor :    1.00
            Data Type : Reduced
Creating Hourly Time Series File
                     Loading Time Series
File:C:\KC_SWDM\KC_DATA\STTG60R.rnf    :
Till Grass                0.23 acres
                     Loading Time Series
File:C:\KC_SWDM\KC_DATA\STEI60R.rnf    :
Impervious                0.48 acres
                      --------------
         Total Area :     0.71 acres
Peak Discharge:  0.275 CFS at  6:00 on Jan  9 in Year 8
                                        Storing Time Series
File:6222dev.tsf    :
                            Time Series Computed

                                KCRTS Command
                                -------------
                        Enter the Analysis TOOLS Module
                        -------------------------------

                            Analysis Tools Command
                            ----------------------
                      Compute PEAKS and Flow Frequencies
                      ----------------------------------
                                 Loading Stage/Discharge
curve:6222dev.tsf    :
          Flow Frequency Analysis
          -------------------------------------------------------
  Time Series File:6222dev.tsf
  Project Location:Sea-Tac
                              Frequencies & Peaks saved to
File:6222dev.pks    :

                            Analysis Tools Command
                            ----------------------
                            RETURN to Previous Menu
                            -----------------------

                                KCRTS Command
                                -------------
                      Size a Retention/Detention FACILITY
                      -----------------------------------
                    Loading Retention/Detention Facility
File:6222vault.rdf    :
```

Gunnup Parcel
Developed Flows

ENCLOSURE 4

Flow Frequency Analysis
Time Series File:6222dev.tsf
Project Location:Sea-Tac

---Annual Peak Flow Rates---			-----Flow Frequency Analysis-------			
Flow Rate (CFS)	Rank	Time of Peak	- - Peaks - - (CFS)	Rank	Return Period	Prob
0.137	6	2/09/01 2:00	0.275	1	100.00	0.990
0.113	8	1/05/02 16:00	0.180	2	25.00	0.960
0.164	3	2/27/03 7:00	0.164	3	10.00	0.900
0.123	7	8/26/04 2:00	0.148	4	5.00	0.800
0.148	4	10/28/04 16:00	0.145	5	3.00	0.667
0.145	5	1/18/06 16:00	0.137	6	2.00	0.500
0.180	2	10/26/06 0:00	0.123	7	1.30	0.231
0.275	1	1/09/08 6:00	0.113	8	1.10	0.091
Computed Peaks			0.243		50.00	0.980

Retention/Detention Facility

Type of Facility:	Detention Tank	
Tank Diameter:	3.00	ft
Tank Length:	1445.00	ft
Effective Storage Depth:	2.50	ft
Stage 0 Elevation:	0.00	ft
Storage Volume:	9095.	cu. ft
Riser Head:	2.50	ft
Riser Diameter:	12.00	inches
Number of orifices:	2	

Orifice #	Height (ft)	Diameter (in)	Full Head Discharge (CFS)	Pipe Diameter (in)
1	0.00	0.55	0.013	
2	1.49	1.07	0.031	4.0

Top Notch Weir: None

Outflow Rating Curve: None

Stage (ft)	Elevation (ft)	Storage (cu. ft)	Storage (ac-ft)	Discharge (cfs)	Percolation (cfs)
0.00	0.00	0.	0.000	0.000	0.00
0.01	0.01	32.	0.001	0.001	0.00
0.02	0.02	65.	0.001	0.001	0.00
0.03	0.03	98.	0.002	0.002	0.00
0.04	0.04	131.	0.003	0.002	0.00
0.05	0.05	165.	0.004	0.002	0.00
0.15	0.15	511.	0.012	0.003	0.00
0.25	0.25	878.	0.020	0.004	0.00
0.35	0.35	1261.	0.029	0.005	0.00
0.45	0.45	1658.	0.038	0.005	0.00
0.55	0.55	2067.	0.047	0.006	0.00
0.65	0.65	2485.	0.057	0.007	0.00
0.75	0.75	2909.	0.067	0.007	0.00
0.85	0.85	3339.	0.077	0.007	0.00
0.95	0.95	3771.	0.087	0.008	0.00
1.05	1.05	4205.	0.097	0.008	0.00
1.15	1.15	4637.	0.106	0.009	0.00
1.25	1.25	5067.	0.116	0.009	0.00
1.35	1.35	5492.	0.126	0.009	0.00
1.45	1.45	5909.	0.136	0.010	0.00
1.49	1.49	6074.	0.139	0.010	0.00
1.50	1.50	6115.	0.140	0.010	0.00
1.51	1.51	6156.	0.141	0.011	0.00
1.52	1.52	6196.	0.142	0.012	0.00
1.53	1.53	6237.	0.143	0.014	0.00
1.55	1.55	6318.	0.145	0.016	0.00
1.56	1.56	6358.	0.146	0.018	0.00
1.57	1.57	6398.	0.147	0.019	0.00
1.58	1.58	6438.	0.148	0.019	0.00
1.59	1.59	6478.	0.149	0.020	0.00

1.69	1.69	6870.	0.158	0.024	0.00
1.79	1.79	7247.	0.166	0.028	0.00
1.89	1.89	7606.	0.175	0.031	0.00
1.99	1.99	7944.	0.182	0.033	0.00
2.09	2.09	8256.	0.190	0.036	0.00
2.19	2.19	8537.	0.196	0.038	0.00
2.29	2.29	8781.	0.202	0.040	0.00
2.39	2.39	8975.	0.206	0.042	0.00
2.49	2.49	9092.	0.209	0.044	0.00
2.50	2.50	9095.	0.209	0.044	0.00
2.60	2.60	9095.	0.209	0.354	0.00
2.70	2.70	9095.	0.209	0.918	0.00
2.80	2.80	9095.	0.209	1.650	0.00
2.90	2.90	9095.	0.209	2.440	0.00
3.00	3.00	9095.	0.209	2.730	0.00
3.10	3.10	9095.	0.209	2.980	0.00
3.20	3.20	9095.	0.209	3.220	0.00
3.30	3.30	9095.	0.209	3.440	0.00
3.40	3.40	9095.	0.209	3.650	0.00
3.50	3.50	9095.	0.209	3.840	0.00
3.60	3.60	9095.	0.209	4.030	0.00
3.70	3.70	9095.	0.209	4.200	0.00
3.80	3.80	9095.	0.209	4.370	0.00
3.90	3.90	9095.	0.209	4.540	0.00
4.00	4.00	9095.	0.209	4.700	0.00
4.10	4.10	9095.	0.209	4.850	0.00
4.20	4.20	9095.	0.209	5.000	0.00
4.30	4.30	9095.	0.209	5.140	0.00
4.40	4.40	9095.	0.209	5.280	0.00
4.50	4.50	9095.	0.209	5.420	0.00

Hyd	Inflow	Outflow		Peak		Storage	
		Target	Calc	Stage	Elev	(Cu-Ft)	(Ac-Ft)
1	0.28	*******	0.24	2.56	2.56	9095.	0.209
2	0.14	0.05	0.05	2.50	2.50	9095.	0.209
3	0.16	*******	0.03	2.04	2.04	8099.	0.186
4	0.18	*******	0.03	1.98	1.98	7922.	0.182
5	0.15	*******	0.02	1.59	1.59	6485.	0.149
6	0.10	*******	0.01	1.42	1.42	5782.	0.133
7	0.11	*******	0.01	1.35	1.35	5488.	0.126
8	0.12	*******	0.01	0.92	0.92	3630.	0.083

Route Time Series through Facility
Inflow Time Series File:6222dev.tsf
Outflow Time Series File:6222rdout

Inflow/Outflow Analysis
Peak Inflow Discharge: 0.275 CFS at 6:00 on Jan 9 in Year 8
Peak Outflow Discharge: 0.235 CFS at 10:00 on Jan 9 in Year 8
Peak Reservoir Stage: 2.56 Ft
Peak Reservoir Elev: 2.56 Ft
Peak Reservoir Storage: 9095. Cu-Ft
: 0.209 Ac-Ft

Flow Frequency Analysis
Time Series File:6222rdout.tsf
Project Location:Sea-Tac

---Annual Peak Flow Rates---			-----Flow Frequency Analysis-------				
Flow Rate (CFS)	Rank	Time of Peak	- - Peaks - - (CFS)	(ft)	Rank	Return Period	Prob
0.047	2	2/09/01 20:00	0.235	2.56	1	100.00	0.990
0.009	7	1/07/02 4:00	0.047	2.50	2	25.00	0.960
0.034	3	3/06/03 22:00	0.034	2.04	3	10.00	0.900
0.008	8	8/26/04 8:00	0.033	1.98	4	5.00	0.800
0.010	6	1/08/05 5:00	0.020	1.59	5	3.00	0.667
0.020	5	1/19/06 0:00	0.010	1.42	6	2.00	0.500
0.033	4	11/24/06 8:00	0.009	1.35	7	1.30	0.231
0.235	1	1/09/08 10:00	0.008	0.92	8	1.10	0.091
Computed Peaks			0.172	2.54		50.00	0.980

Flow Duration from Time Series File:6222rdout.tsf

Cutoff CFS	Count	Frequency %	CDF %	Exceedence_Probability %	
0.001	30581	49.871	49.871	50.129	0.501E+00
0.002	6295	10.266	60.137	39.863	0.399E+00
0.003	7655	12.484	72.621	27.379	0.274E+00
0.005	4948	8.069	80.690	19.310	0.193E+00
0.006	5559	9.066	89.755	10.245	0.102E+00
0.007	3052	4.977	94.733	5.267	0.527E-01
0.009	1474	2.404	97.136	2.864	0.286E-01
0.010	1301	2.122	99.258	0.742	0.742E-02
0.011	161	0.263	99.521	0.479	0.479E-02
0.013	20	0.033	99.553	0.447	0.447E-02
0.014	17	0.028	99.581	0.419	0.419E-02
0.015	22	0.036	99.617	0.383	0.383E-02
0.016	22	0.036	99.653	0.347	0.347E-02
0.018	7	0.011	99.664	0.336	0.336E-02
0.019	27	0.044	99.708	0.292	0.292E-02
0.020	23	0.038	99.746	0.254	0.254E-02
0.022	29	0.047	99.793	0.207	0.207E-02
0.023	14	0.023	99.816	0.184	0.184E-02
0.024	8	0.013	99.829	0.171	0.171E-02
0.026	9	0.015	99.843	0.157	0.157E-02
0.027	9	0.015	99.858	0.142	0.142E-02
0.028	10	0.016	99.874	0.126	0.126E-02
0.029	10	0.016	99.891	0.109	0.109E-02
0.031	9	0.015	99.905	0.095	0.946E-03
0.032	12	0.020	99.925	0.075	0.750E-03
0.033	17	0.028	99.953	0.047	0.473E-03
0.035	11	0.018	99.971	0.029	0.294E-03
0.036	1	0.002	99.972	0.028	0.277E-03
0.037	4	0.007	99.979	0.021	0.212E-03
0.039	2	0.003	99.982	0.018	0.179E-03
0.040	3	0.005	99.987	0.013	0.130E-03
0.041	3	0.005	99.992	0.008	0.815E-04
0.042	1	0.002	99.993	0.007	0.652E-04

0.044	3	0.005	99.998	0.002	0.163E-04
0.045	0	0.000	99.998	0.002	0.163E-04
0.046	0	0.000	99.998	0.002	0.163E-04

Duration Comparison Anaylsis
Base File: 6222pre.tsf
New File: 6222rdout.tsf
Cutoff Units: Discharge in CFS

	-----Fraction of Time-----			---------Check of Tolerance-------			
Cutoff	Base	New	%Change	Probability	Base	New	%Change
0.010	0.90E-02	0.73E-02	-19.3	0.90E-02	0.010	0.009	-4.9
0.013	0.62E-02	0.44E-02	-29.2	0.62E-02	0.013	0.010	-20.9
0.015	0.49E-02	0.38E-02	-23.3	0.49E-02	0.015	0.011	-27.9
0.018	0.36E-02	0.34E-02	-6.8	0.36E-02	0.018	0.016	-12.8
0.021	0.28E-02	0.23E-02	-17.3	0.28E-02	0.021	0.020	-5.5
0.023	0.22E-02	0.18E-02	-19.7	0.22E-02	0.023	0.021	-10.4
0.026	0.15E-02	0.15E-02	6.7	0.15E-02	0.026	0.027	2.9
0.029	0.99E-03	0.12E-02	21.3	0.99E-03	0.029	0.030	6.0
0.031	0.59E-03	0.86E-03	47.2	0.59E-03	0.031	0.033	4.3
0.034	0.34E-03	0.38E-03	9.5	0.34E-03	0.034	0.034	1.0
0.037	0.21E-03	0.24E-03	15.4	0.21E-03	0.037	0.038	3.0
0.039	0.16E-03	0.15E-03	-10.0	0.16E-03	0.039	0.039	-0.2
0.042	0.98E-04	0.65E-04	-33.3	0.98E-04	0.042	0.041	-2.8
0.045	0.16E-04	0.16E-04	0.0	0.16E-04	0.045	0.047	5.8

Maximum positive excursion = 0.002 cfs (8.5%)
occurring at 0.029 cfs on the Base Data:6222pre.tsf
and at 0.032 cfs on the New Data:6222rdout.tsf

Maximum negative excursion = 0.005 cfs (-30.5%)
occurring at 0.015 cfs on the Base Data:6222pre.tsf
and at 0.010 cfs on the New Data:6222rdout.tsf

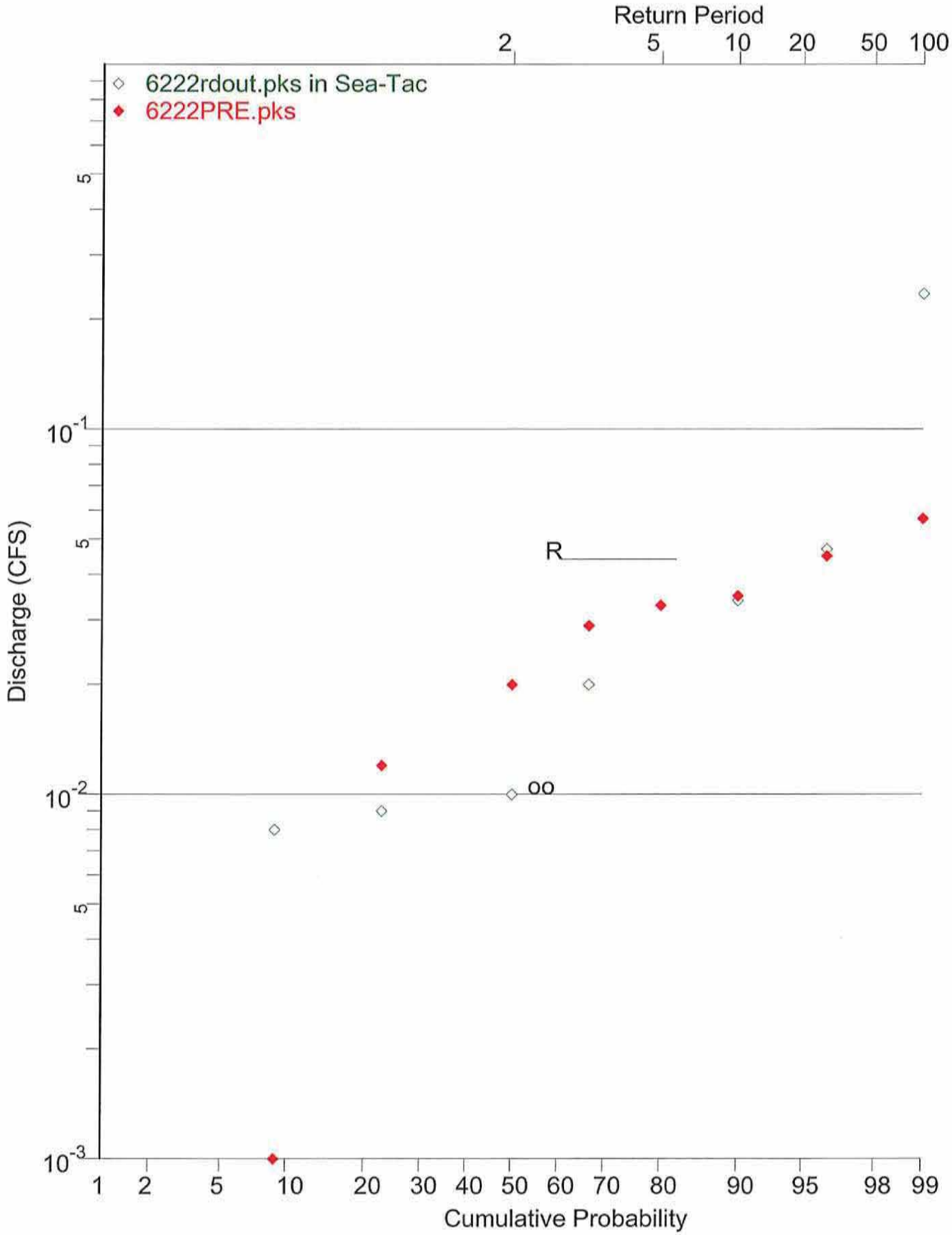
Return Period
2
5
10
20
50
100
6222rdout.pks in Sea-Tac
6222PRE.pks
Discharge (CFS)
10^{-1}
10^{-2}
10^{-3}
5
R
oo
1
2
5
10
20
30
40
50
60
70
80
90
95
98
99
Cumulative Probability

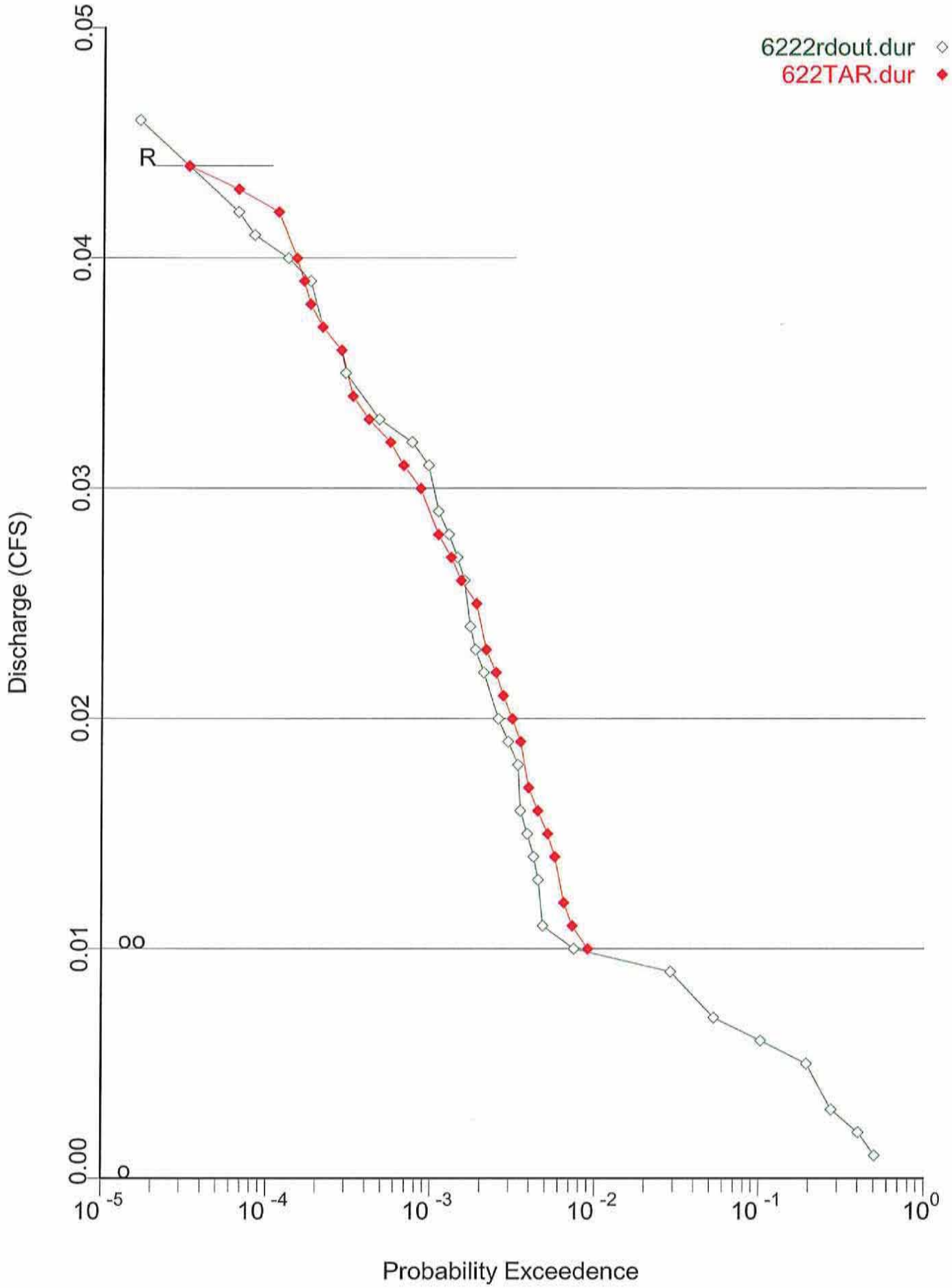
6222rdout.dur
622TAR.dur
R
0.05
0.04
0.03
0.02
0.01
0.00
Discharge (CFS)
10 -5
10 -4
10 -3
10 -2
10 -1
10 0
Probability Exceedence

THE MOST ADVANCED NAME IN DRAINAGE SYSTEMS
Version 7.8

STORMWATER RETENTION / DETENTION PIPE SYSTEM SIZING WORKSHEET

Project Name: _____
Location (City, State): _____
Prepared For: _____
Date Prepared: _____
Engineer: _____
Contractor: _____
Regional Engineer: _____
Area Sales Representative: _____
Surface Application: _____

Enter or Select values in the Yellow fields ONLY

UNITS	
Unit of Measure	☐ Imperial (ft, in) ☐ Metric (mm, m)

SYSTEM		
Joint Type	Gasketed WT	
Design Storage Volume	10024	CF
Average Cover Height[4]	1.00	FT

HEADER	
Header Diameter	36
Number of Headers	2
Perforate Headers?	No
Include Header(s) in Storage Volume?	Yes

LATERALS	Lateral Diameter (in)	Lateral Length (ft)	Number of Laterals	# of Sticks / Lateral	Approx. Length of End Stick
Group 1	36	92	14	5	14.2-ft
Group 2	36			0	0-ft
Group 3	36			0	0-ft

Perforate Laterals? No

BACKFILL

A non-perforated system has been selected

	STORAGE VOLUME COMPONENT				APPROXIMATE SYSTEM SIZE		EXCAVATION						
	Product Volume (CF)	Stone (CF)	ASV (CF)	Total System (CF)	Width (FT)	Length (FT)	Pipe Diameter (IN)	Width (FT)	Length (FT)	Disturbed Surface Area (SYD)	Excav-ation[2] (CYD)	Estimated Backfill[3] (CYD)	ASV (CYD)
Group 1	10,118	0	0	10,118	72	101	36	75	104	861	1,380	1,006	0
Group 2	0	0	0	0	0	0	36	0	0	0	0	0	0
Group 3	0	0	0	0	0	0	36	0	0	0	0	0	0
TOTALS	10,118	0	0	10,118.32						861	1,380	1,006	0

100.9% of the required storage

NOTES
1 - Full Stick: Assumed a standard lay length of 19'-8".
2 - Excavation: Based on manufacturer's recommended trench width and bedding depth. Estimated volumes assume a flat system based on the user-entered Average Cover Height.
3 - Backfill: Does not account for pipe corrugations - calculated for conservative quanitites. Not for use with take-offs or ordering purposes.
4 - Cover Height: For traffic installations, 1-ft of minimum cover is required for diameters 12-36", 2-ft for 42-60". Maximum cover shall not exceed 8-ft without consulting Applications Engineering.
5 - Bill of Materials: Does not differentiate between ST and WT fittings or between A and H profile connections. Determined on a project-specific basis.
6 - Quantities: Assumes all Groups are same diameter. Run separate calculations to determine quantities and costs for different Group diameters.

This Excel spreadsheet isprovided for rough estimating purposes only. This tool is intended to assist the design engineer in sizing stormwater management systems using ADS pipe and manifold components. As with any calculation aid, this tool should be used for estimating only; the engineer must verify the assumptions and methods to ensure they satisfy the project and local design criteria.

ENCLOSURE 4

QUANTITIES	
Approx Quantity of Pipe Needed for DSV	
ID	ft (m)
12-in (300-mm)	12,450 3,795
15-in (375-mm)	8,190 2,496
18-in (450-mm)	5,672 1,729
24-in (600-mm)	3,191 973
30-in (750-mm)	2,042 622
36-in (900-mm)	1,418 432
42-in (1050-mm)	1,072 327
48-in (1200-mm)	811 247
54-in (1350-mm)	630 192
60-in (1500-mm)	519 158

PIPE PROPERTIES		
Pipe Information		
ID	OD/ Width in (mm)	Volume cf/lf (m^3/m)
12-in (300-mm)	14.2 (361)	0.81 (0.07)
15-in (375-mm)	17.7 (450)	1.22 (0.11)
18-in (450-mm)	21.5 (546)	1.78 (0.17)
24-in (600-mm)	28.4 (721)	3.16 (0.29)
30-in (750-mm)	35.5 (902)	4.91 (0.46)
36-in (900-mm)	41.4 (1052)	7.07 (0.66)
42-in (1050-mm)	48.0 (1219)	9.35 (0.87)
48-in (1200-mm)	54.0 (1372)	12.36 (1.15)
54-in (1350-mm)	61.0 (1549)	15.90 (1.48)
60-in (1500-mm)	67.3 (1709)	19.31 (1.79)

BACKFILL PROPERTIES		
Stone Porosity		
40%	35%	30%
cf/lf (m^3/m)	cf/lf (m^3/m)	cf/lf (m^3/m)
0.85 (0.08)	0.74 (0.07)	0.63 (0.06)
1.06 (0.10)	0.93 (0.09)	0.79 (0.07)
1.40 (0.13)	1.22 (0.11)	1.05 (0.10)
1.91 (0.18)	1.67 (0.16)	1.43 (0.13)
3.07 (0.29)	2.69 (0.25)	2.31 (0.21)
4.20 (0.39)	3.68 (0.34)	3.15 (0.29)
5.76 (0.53)	5.04 (0.47)	4.32 (0.40)
6.73 (0.62)	5.89 (0.55)	5.05 (0.47)
7.74 (0.72)	6.77 (0.63)	5.80 (0.54)
8.49 (0.79)	7.42 (0.69)	6.36 (0.59)

INSTALLATION RECOMMENDATI		
Pipe Diameter	Bedding Depth	Dist. From Pipe OD to Trench Wall
ID	in (mm)	in (mm)
12-in (300-mm)	4 (102)	12 (305)
15-in (375-mm)	4 (102)	12 (305)
18-in (450-mm)	4 (102)	12 (305)
24-in (600-mm)	4 (102)	12 (305)
30-in (750-mm)	4 (102)	18 (457)
36-in (900-mm)	4 (102)	18 (457)
42-in (1050-mm)	6 (152)	18 (457)
48-in (1200-mm)	6 (152)	18 (457)
54-in (1350-mm)	6 (152)	18 (457)
60-in (1500-mm)	6 (152)	18 (457)

** For traffic areas*

CONVERSIONS

Only enter values in the YELLOW fields

0.1	Acre-feet	*equals*	4356	Cubic Feet
1	Cubic- Feet	*equals*	2.296E-05	Acre-Feet
1	Cubic- Feet	*equals*	7.481	Gallons
1	Gallons	*equals*	0.133672	Cubic-Feet
1	Gallons per Day	*equals*	1.547E-06	Cubic-Feet per Second
1	Gallons per Minute	*equals*	0.0022279	Cubic-Feet per Second
1	Cubic-Feet per Second	*equals*	448.86	Gallons per Minute
1	Cubic-Feet per Second	*equals*	646358.4	Gallons per Day
1	Feet of Water	*equals*	0.4335	PSI
1	Cubic Feet	*equals*	0.037037	Cubic Yards
1	Cubic Yards	*equals*	27	Cubic Feet
1	Sqaure Feet	*equals*	0.1111111	Square Yard
1	Square Yard	*equals*	9	Sqaure Feet
1	Square Inches	*equals*	0.0069444	Square Feet
1	Square Feet	*equals*	144	Square Inches

ENCLOSURE 4

APPROXIMATE SYSTEM LAYOUT - GROUP 1

36-in system with 14 laterals, 92-ft long

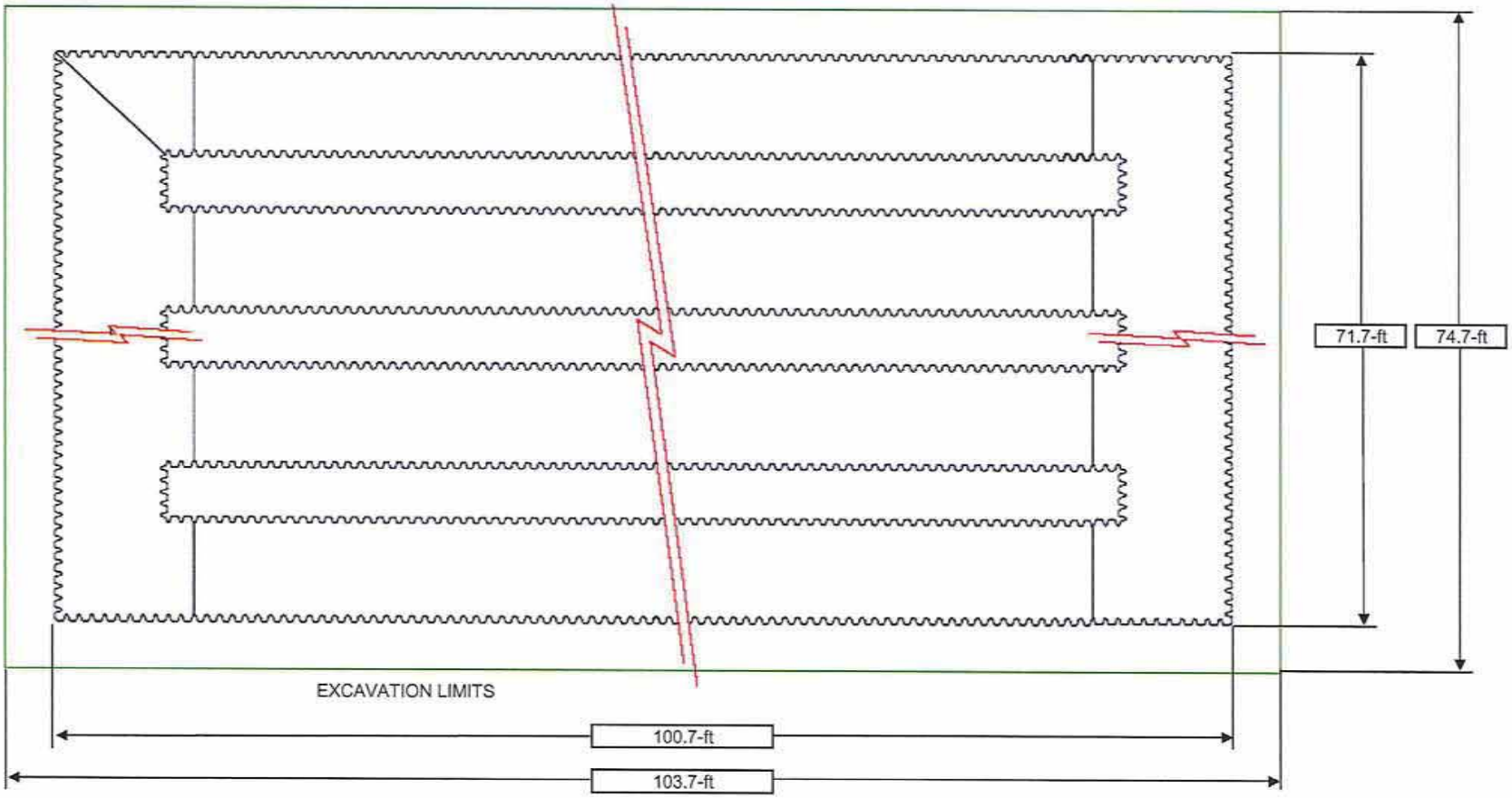

Schmatic is for system dimension information only. Laterals (4) are depicted for illustration only - actual number of laterals is indicated above. Clean-outs, risers, and other add-ons maybe recommended but are not shown in this schematic

ENCLOSURE 4

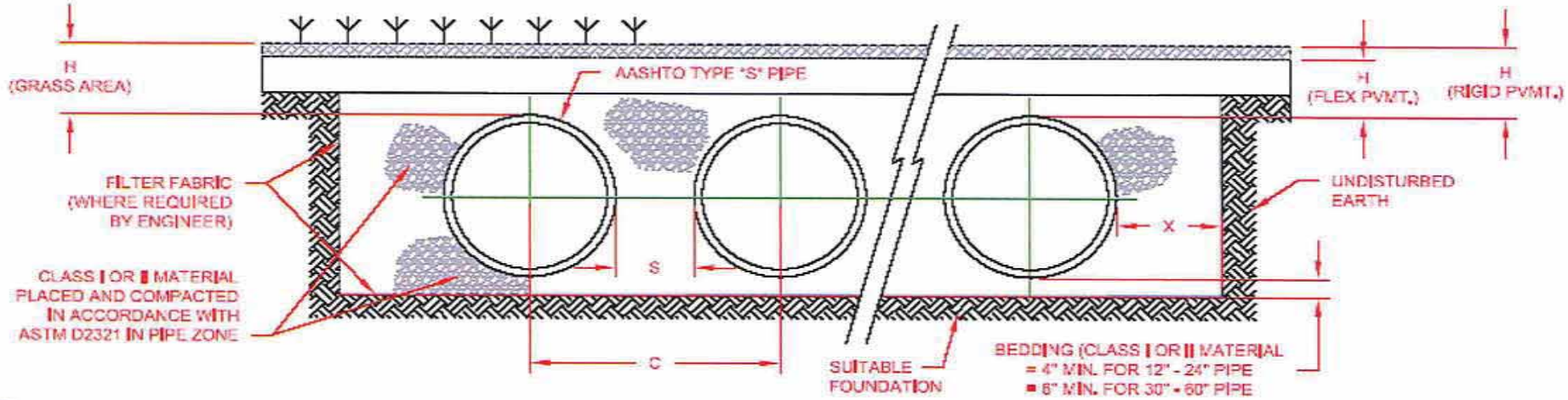

NOTES:

1. ALL REFERENCES TO CLASS I OR II MATERIAL ARE PER ASTM D2321 "STANDARD PRACTICE FOR UNDERGROUND INSTALLATION OF THERMOPLASTIC PIPE FOR SEWERS AND OTHER GRAVITY FLOW APPLICATIONS", LATEST EDITION.

2. ALL RETENTION AND DETENTION SYSTEMS SHALL BE INSTALLED IN ACCORDANCE WITH ASTM D2321, LATEST EDITION AND THE MANUFACTURER'S PUBLISHED INSTALLATION GUIDELINES.

3. MEASURES SHOULD BE TAKEN TO PREVENT THE MIGRATION OF NATIVE FINES INTO THE BACKFILL MATERIAL, WHEN REQUIRED. SEE ASTM D2321.

4. FILTER FABRIC: A GEOTEXTILE FABRIC MAY BE USED AS SPECIFIED BY THE ENGINEER TO PREVENT THE MIGRATION OF FINES FROM THE NATIVE SOIL INTO THE SELECT BACKFILL MATERIAL.

5. FOUNDATION: WHERE THE TRENCH BOTTOM IS UNSTABLE, THE CONTRACTOR SHALL EXCAVATE TO A DEPTH REQUIRED BY THE ENGINEER AND REPLACE WITH SUITABLE MATERIAL AS SPECIFIED BY THE ENGINEER. AS AN ALTERNATIVE AND AT THE DISCRETION OF THE DESIGN ENGINEER, THE TRENCH BOTTOM MAY BE STABILIZED USING A GEOTEXTILE MATERIAL.

6. BEDDING: SUITABLE MATERIAL SHALL BE CLASS I OR II. THE CONTRACTOR SHALL PROVIDE DOCUMENTATION FOR MATERIAL SPECIFICATION TO ENGINEER. UNLESS OTHERWISE NOTED BY THE ENGINEER, MINIMUM BEDDING THICKNESS SHALL BE 4" (100mm) FOR 4"-24" (100mm-600mm); 6" (150mm) FOR 30"-60" (750mm-900mm).

7. INITIAL BACKFILL: SUITABLE MATERIAL SHALL BE CLASS I OR II IN THE PIPE ZONE EXTENDING NOT LESS THAN 6" ABOVE CROWN OF PIPE. THE CONTRACTOR SHALL PROVIDE DOCUMENTATION FOR MATERIAL SPECIFICATION TO ENGINEER. MATERIAL SHALL BE INSTALLED AS REQUIRED IN ASTM D2321, LATEST EDITION.

8. MINIMUM COVER: MINIMUM COVER OVER ALL RETENTION/DETENTION SYSTEMS IN NON-TRAFFIC APPLICATIONS (GRASS OR LANDSCAPE AREAS) IS 12" FROM TOP OF PIPE TO GROUND SURFACE. ADDITIONAL COVER MAY BE REQUIRED TO PREVENT FLOATATION. FOR TRAFFIC APPLICATIONS, MINIMUM COVER IS 12" UPTO 36" DIAMETER PIPE AND 24" OF COVER FOR 42" - 60" DIAMETER PIPE, MEASURED FROM TOP OF PIPE TO BOTTOM OF FLEXIBLE PAVEMENT OR TO TOP OF RIGID PAVEMENT.

NOMINAL DIAMETER	NOMINAL O.D.	TYPICAL SPACING "S"	TYPICAL SPACING "C"	TYPICAL SIDE WALL "X"	H (NON-TRAFFIC)	H (TRAFFIC)
12" (300 MM)	14.5" (368 MM)	11" (279 MM)	25.4" (645 MM)	8" (203 MM)	12" (292 MM)	12" (292 MM)
15" (375 MM)	18" (457 MM)	12" (292 MM)	28.9" (734 MM)	8" (203 MM)	12" (292 MM)	12" (292 MM)
18" (450 MM)	21" (533 MM)	13" (330 MM)	33.9" (862 MM)	9" (229 MM)	12" (292 MM)	12" (292 MM)
24" (600 MM)	28" (711 MM)	13" (330 MM)	40.7" (1034 MM)	10" (254 MM)	12" (292 MM)	12" (292 MM)
30" (750 MM)	36" (914 MM)	18" (457 MM)	53.1" (1347 MM)	18" (457 MM)	12" (292 MM)	12" (292 MM)
36" (900 MM)	42" 1067 MM)	22" (559 MM)	63" (1600 MM)	18" (457 MM)	12" (292 MM)	12" (292 MM)
42" (1050 MM)	48" (1219 MM)	24" (610 MM)	71.9" (1826 MM)	18" (457 MM)	12" (292 MM)	24" (610 MM)
48" (1200 MM)	54" (1372 MM)	25" (635 MM)	78.5" (1994 MM)	18" (457 MM)	12" (292 MM)	24" (610 MM)
60" (1500 MM)	67" (1702 MM)	24" (610 MM)	90" (2286 MM)	18" (457 MM)	12" (292 MM)	24" (610 MM)

© 2007 ADS, INC.

REV.	DESCRIPTION	BY	MM/DD/YY	CHK'D

ADVANCED DRAINAGE SYSTEMS, INC. ("ADS") HAS PREPARED THIS DETAIL BASED ON INFORMATION PROVIDED TO ADS. THIS DRAWING IS INTENDED TO DEPICT THE COMPONENTS AS REQUESTED. ADS HAS NOT PERFORMED ANY ENGINEERING OR DESIGN SERVICES FOR THIS PROJECT, NOR HAS ADS INDEPENDENTLY VERIFIED THE INFORMATION SUPPLIED. THE INSTALLATION DETAILS PROVIDED HEREIN ARE GENERAL RECOMMENDATIONS AND ARE NOT SPECIFIC FOR THIS PROJECT. THE DESIGN ENGINEER SHALL REVIEW THESE DETAILS PRIOR TO CONSTRUCTION. IT IS THE DESIGN ENGINEERS RESPONSIBILITY TO ENSURE THE DETAILS PROVIDED HEREIN MEETS OR EXCEEDS THE APPLICABLE NATIONAL, STATE, OR LOCAL REQUIREMENTS AND TO ENSURE THAT THE DETAILS PROVIDED HEREIN ARE ACCEPTABLE FOR THIS PROJECT.

DIA. DET/RET SYSTEM

TYPICAL RET/DET
CROSS SECTION DETAIL

DRAWING NUMBER: STD-702

ADS
ADVANCED DRAINAGE SYSTEMS, INC.
4640 TRUEMAN BLVD
HILLIARD, OHIO 43026

DRAWN BY: AWW
DATE: 07.26.06
APP BY:
SCALE: NTS
SHEET: OF

ENCLOSURE 4

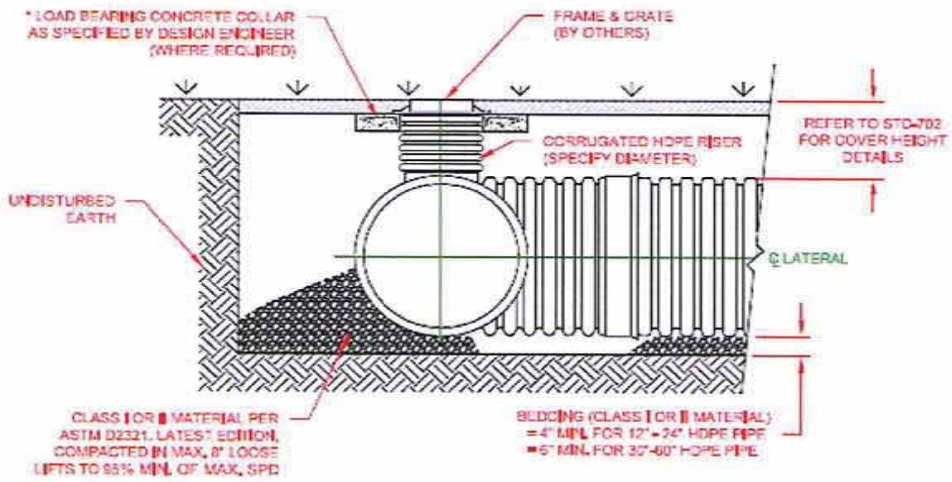

SECTION A-A

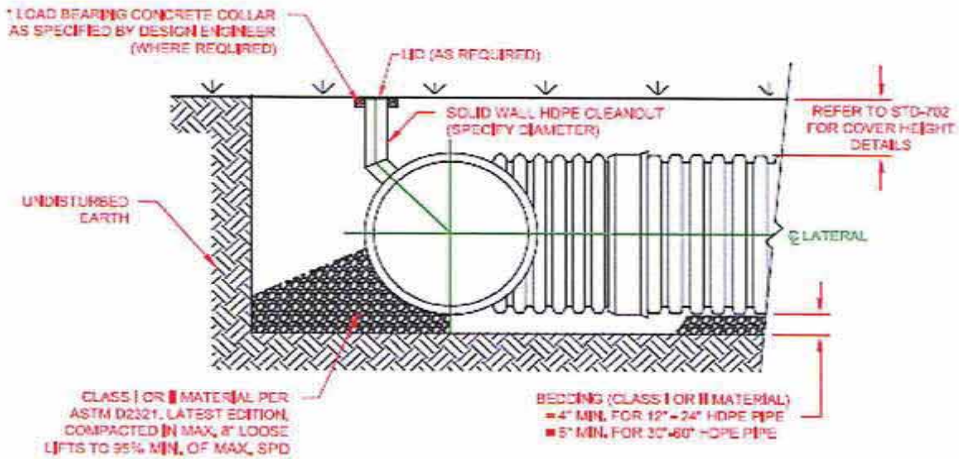

SECTION B-B

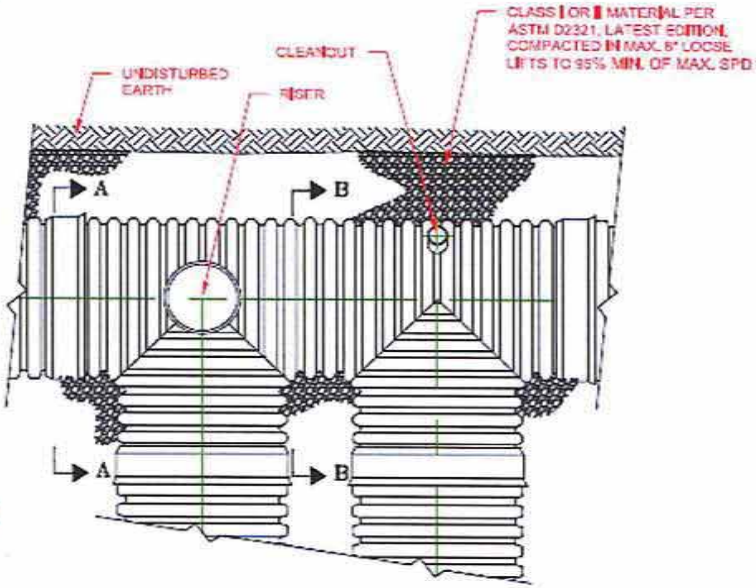

* LOAD BEARING CONCRETE COLLAR SHALL BE CONSTRUCTED IN TRAFFIC AREAS SUCH THAT THE LIVE LOAD IS TRANSMITTED TO THE SURROUNDING SOIL AND NOT DIRECTLY TO THE RISER.

© 2007 ADS, INC.

REV.	DESCRIPTION	BY	MM/DD/YY	CHK'D
1	UPDATED DRAWING	TJR	03/13/07	CKS

ADVANCED DRAINAGE SYSTEMS, INC. ("ADS") HAS PREPARED THIS DETAIL BASED ON INFORMATION PROVIDED TO ADS. THIS DRAWING IS INTENDED TO DEPICT THE COMPONENTS AS REQUESTED. ADS HAS NOT PERFORMED ANY ENGINEERING OR DESIGN SERVICES FOR THIS PROJECT, NOR HAS ADS INDEPENDENTLY VERIFIED THE INFORMATION SUPPLIED. THE INSTALLATION DETAILS PROVIDED HEREIN ARE GENERAL RECOMMENDATIONS AND ARE NOT SPECIFIC FOR THIS PROJECT. THE DESIGN ENGINEER SHALL REVIEW THESE DETAILS PRIOR TO CONSTRUCTION. IT IS THE DESIGN ENGINEERS RESPONSIBILITY TO ENSURE THE DETAILS PROVIDED HEREIN MEETS OR EXCEEDS THE APPLICABLE NATIONAL, STATE, OR LOCAL REQUIREMENTS AND TO ENSURE THAT THE DETAILS PROVIDED HEREIN ARE ACCEPTABLE FOR THIS PROJECT.

TYPICAL RET/DET RISER/CLEAN-OUT DETAIL

DRAWING NUMBER: STD-703

ADS ADVANCED DRAINAGE SYSTEMS, INC.
4640 TRUEMAN BLVD
HILLIARD, OHIO 43026

DRAWN BY	CRW
DATE	10/23/06
SCALE	NTS
SHEET	OF

ENCLOSURE 4

WATER QUALITY FACILITY SIZING

CONTECH STORMWATER SOLUTIONS INC.

Determining Number of Cartridges for Systems Downstream of Detention

CONTECH Stormwater Solutions Inc. Engineer:	ENGR	
Date	10/12/2011	
Site Information		
Project Name	Guynup Parcel	
Project State	Washington	
Project Location	Kirkland	
Drainage Area, Ad	0.71	ac
Impervious Area, Ai	0.48	ac
Pervious Area, Ap	0.23	
% Impervious	68%	
Runoff Coefficient, Rc	0.66	
Upstream Detention System		
Peak release rate from detention, $Q_{release\ peak}$	0.17	cfs
Treatment release rate from detention, $Q_{release\ treat}$	0.01	cfs
Detention pretreatment credit (from removal efficiency calcs)	50%	
Mass loading calculations		
Mean Annual Rainfall, P	36	in
Agency required % removal	80%	
Percent Runoff Capture	90%	
Mean Annual Runoff, V_t	54,984	ft^3
Event Mean Concentration of Pollutant, EMC	60	mg/l
Annual Mass Load, M_{total}	205.83	lbs
Filter System		
Filtration brand	StormFilter	
Cartridge height	12	in
Specific Flow Rate	1.0	gpm/ft^2
Number of cartridges - mass loading		
Mass removed by pretreatment system, M_{pre}	102.91	lbs
Mass load to filters after pretreatment, M_{pass1}	102.91	lbs
Estimate the required filter efficiency, E_{filter}	0.60	
Mass to be captured by filters, M_{filter}	61.75	lbs
Allowable Cartridge Flow rate, Q_{cart}	5.00	
Mass load per cartridge, M_{cart} (lbs)	24.00	lbs
Number of Cartridges required, N_{mass}	3	
Treatment Capacity	0.03	cfs
Determine Critical Sizing Value		
Number of Cartridges using $Q_{release\ treat}$, N_{flow}	1	
Method to Use:	MASS-LOADING	

SUMMARY

Treatment Flow Rate, cfs	0.03
Cartridge Flow Rate, gpm	5.0
Number of Cartridges	3

ENCLOSURE 4

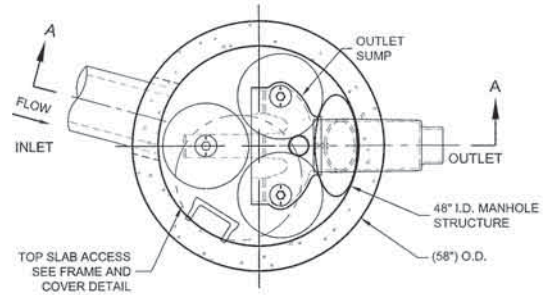

PLAN VIEW

STANDARD OUTLET RISER
FLOWKIT: 40A

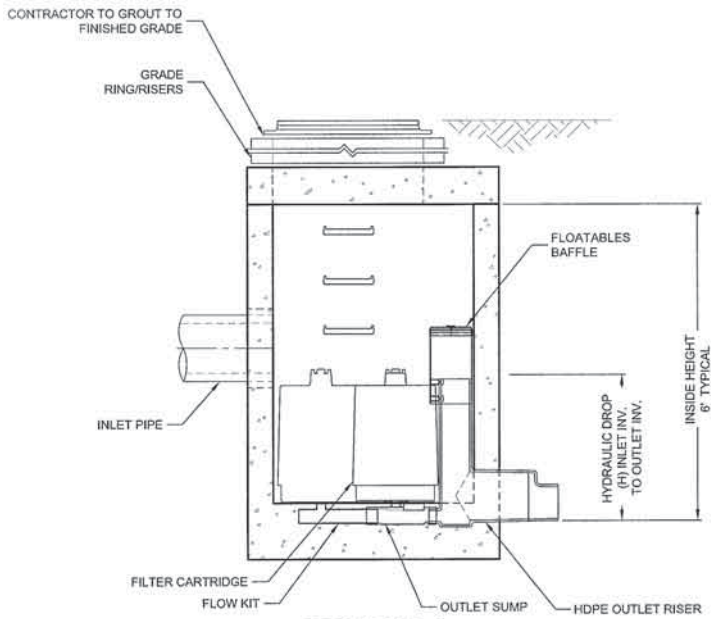

SECTION A-A

STORMFILTER DESIGN NOTES

STORMFILTER TREATMENTCAPACITY IS A FUNCTION OF THE CARTRIDGE SELECTION AND THE NUMBER OF CARTRIDGES. THE STANDARD MANHOLE STYLE IS SHOWN WITH THE MAXIMUM NUMBER OF CARTRIDGES (3). VOLUME SYSTEM IS ALSO AVAILABLE WITH MAXIMUM 3 CARTRIDGES. Ø45 MANHOLE STORMFILTER PEAK HYDRAULIC CAPACITY IS 1.0 CFS. IF THE SITE CONDITIONS EXCEED 1.0 CFS AN UPSTREAM BYPASS STRUCTURE IS REQUIRED.

CARTRIDGE SELECTION

CARTRIDGE HEIGHT	27"		18"		LOW DROP	
RECOMMENDED HYDRAULIC DROP (H)	3.05'		2.3'		1.8'	
SPECIFIC FLOW RATE (gpm/sf)	2 gpm/ft²	1 gpm/ft²	2 gpm/ft²	1 gpm/ft²	2 gpm/ft²	1 gpm/ft²
CARTRIDGE FLOW RATE (gpm)	22.5	11.25	15	7.5	10	5

FRAME AND COVER

(DIAMETER VARIES)
N.T.S.

SITE SPECIFIC DATA REQUIREMENTS

STRUCTURE ID	*
WATER QUALITY FLOW RATE (cfs)	*
PEAK FLOW RATE (cfs)	*
RETURN PERIOD OF PEAK FLOW (yrs)	*
# OF CARTRIDGES REQUIRED	*
CARTRIDGE FLOW RATE	*
MEDIA TYPE (CSF, PERLITE, ZPG, GAC, PHS)	*

PIPE DATA:	I.E.	MATERIAL	DIAMETER
INLET PIPE #1	*	*	*
INLET PIPE #2	*	*	*
OUTLET PIPE	*	*	*

RIM ELEVATION	*

ANTI-FLOTATION BALLAST	WIDTH	HEIGHT
	*	*

NOTES/SPECIAL REQUIREMENTS:

* PER ENGINEER OF RECORD

GENERAL NOTES

1. CONTECH TO PROVIDE ALL MATERIALS UNLESS NOTED OTHERWISE.
2. DIMENSIONS MARKED WITH ( ) ARE REFERENCE DIMENSIONS. ACTUAL DIMENSIONS MAY VARY.
3. FOR SITE SPECIFIC DRAWINGS WITH DETAILED VAULT DIMENSIONS AND WEIGHTS, PLEASE CONTACT YOUR CONTECH CONSTRUCTION PRODUCTS REPRESENTATIVE. www.contech-cpi.com
4. STORMFILTER WATER QUALITY STRUCTURE SHALL BE IN ACCORDANCE WITH ALL DESIGN DATA AND INFORMATION CONTAINED IN THIS DRAWING.
5. STRUCTURE SHALL MEET AASHTO HS20 AND CASTINGS SHALL MEET AASHTO M306 LOAD RATING, ASSUMING GROUNDWATER ELEVATION AT, OR BELOW, THE OUTLET PIPE INVERT ELEVATION. ENGINEER OF RECORD TO CONFIRM ACTUAL GROUNDWATER ELEVATION
6. FILTER CARTRIDGES SHALL BE MEDIA-FILLED, PASSIVE, SIPHON ACTUATED, RADIAL FLOW, AND SELF CLEANING. RADIAL MEDIA DEPTH SHALL BE 7-INCHES. FILTER MEDIA CONTACT TIME SHALL BE AT LEAST 39 SECONDS.
7. SPECIFIC FLOW RATE IS EQUAL TO THE FILTER TREATMENT CAPACITY (gpm) DIVIDED BY THE FILTER CONTACT SURFACE AREA (sq ft).

INSTALLATION NOTES

1. ANY SUB-BASE, BACKFILL DEPTH, AND/OR ANTI-FLOTATION PROVISIONS ARE SITE-SPECIFIC DESIGN CONSIDERATIONS AND SHALL BE SPECIFIED BY ENGINEER OF RECORD.
2. CONTRACTOR TO PROVIDE EQUIPMENT WITH SUFFICIENT LIFTING AND REACH CAPACITY TO LIFT AND SET THE STORMFILTER STRUCTURE (LIFTING CLUTCHES PROVIDED).
3. CONTRACTOR TO INSTALL JOINT SEALANT BETWEEN ALL STRUCTURE SECTIONS AND ASSEMBLE STRUCTURE.
4. CONTRACTOR TO PROVIDE, INSTALL, AND GROUT INLET PIPE(S).
5. CONTRACTOR TO PROVIDE AND INSTALL CONNECTOR TO THE OUTLET RISER STUB. STORMFILTER EQUIPPED WITH A DUAL DIAMETER HDPE OUTLET STUB AND SAND COLLAR. IF OUTLET PIPE IS LARGER THAN 8 INCHES, CONTRACTOR TO REMOVE THE 8 INCH OUTLET STUB AT MOLDED IN CUT LINE. COUPLING BY FERNCO OR EQUAL AND PROVIDED BY CONTRACTOR.
6. CONTRACTOR TO TAKE APPROPRIATE MEASURES TO PROTECT CARTRIDGES FROM CONSTRUCTION-RELATED EROSION RUNOFF.

The Stormwater Management StormFilter®

CONTECH® CONSTRUCTION PRODUCTS INC.
www.contech-cpi.com
9025 Centre Pointe Dr., Suite 400, West Chester, OH 45069
800-338-1122 513-645-7000 513-645-7993 FAX

SFMH48
STORMFILTER
STANDARD DETAIL

Last Revised: 01/2011

CITY OF KIRKLAND
123 FIFTH AVENUE □ KIRKLAND, WASHINGTON 98033-6189 □ (425) 587-3800

DEPARTMENT OF PUBLIC WORKS
PRE-APPROVED PLANS POLICY

Policy L-1: FEASIBILITY OF STORMWATER LOW IMPACT DEVELOPMENT (LID)

Applicants for projects meeting the threshold for drainage review (except Small Project Type I) must evaluate the feasibility and applicability of full dispersion and full infiltration. If full dispersion and full infiltration is not feasible, the applicant must still implement one or more stormwater LID best management practices (BMP) for a portion of the site.

The Stormwater LID Feasibility Evaluation Worksheets that accompany this policy are intended to be used by the applicant to aid in the feasibility determination. Some factors that can determine feasibility are: physical limitations of the site, engineering limitations, and financial costs. Applicants should submit the Stormwater LID Feasibility Evaluation Worksheets, along with other documentation (if applicable), with the permit application. Applicants should consult the 2009 King County Surface Water Design Manual (KCSWDM), section 5.2.1, for specific criteria of the evaluation process.

City policy is to require the installation of stormwater LID to the maximum extent feasible. The City also acknowledges that stormwater LID may not work on every site. If the evaluation indicates standard LID options listed in the worksheets may not be feasible, please contact City surface water staff at (425) 587-3800 to discuss site specifics. City staff may be able to assist applicants with other LID options.

Regardless of stormwater LID feasibility, the applicant must meet all flow control and water quality treatment requirements applicable to the project. LID BMPs can be counted towards those requirements. All stormwater LID BMPs must be designed and installed according to the 2009 KCSWDM, COK Addendum, and the PW Pre-Approved Plans.

Pre-Approved Plans Policy L-1
January, 2011

Large/Full Projects

Stormwater Low Impact Development (LID)
Feasibility Evaluation Worksheet
Full Project Review

The purpose of this form is to assist the applicant evaluate the feasibility of stormwater LID. This form should be submitted along with the permit application. The need for minimum flow control and water quality treatment measures still applies to the project, regardless of LID feasibility.

Date:	3/16/2012
Project Name:	Guynup Parcel
Project Address:	120th Ave NE
Parcel Number(s):	123850-0110-08
Applicant/Design Engineer Firm and Name: Barghausen Consulting Engineers, Inc.	
Project Use: SFR ☐ MF ☐ COM ☒ IND ☐ TRANSPORTATION ☐	
Site Area (sq. ft.): 31,020	**Target Impervious Surface[1] Area (sq. ft.):** 20,910

1. Applicants are required to evaluate the feasibility and applicability of **full dispersion** for all target impervious surface area on a project.

Feasibility items to consider for Dispersion	**Yes**	**No**
Does the site contain open space available for dispersion? (100ft flowpath)		✓
The site does not contain steep slopes, and is not located adjacent to a steep slope? (15% or greater)	✓	
The site does not contain sensitive areas, and is not located adjacent to a sensitive area? (stream, wetland, or lake)	✓	
Is dispersion not likely to cause or aggravate potential flooding or erosion problems to neighboring properties?	✓	

Comments _____

_____

Is **full dispersion** of all target impervious area feasible? Yes ☐ No ☑

[1]Target impervious surface means that portion of a site's existing, new, and replaced impervious surface from which runoff impacts are required to be mitigated by a particular set of drainage requirements.

2. Are there factors other than site constraints that would make full dispersion or infiltration not feasible for this site (like engineering limitations or financial costs)? Yes ☑ No ☐

   If yes, provide explanation Site soils are not conductive to infiltration and there is a high ground water table in the area

3. For that portion of the target impervious surface where full dispersion is not feasible, then **one or more of the BMPs listed below must be applied** to a portion of the site's impervious surface area, based on the amount of impervious area on site:

   - For projects with 45% to 65% impervious in the developed condition, apply at least 1 LID BMP to at least 20% of the site/lot area or 40% of the target impervious surface (whichever is less).
   - For projects with more than 65% impervious in the developed condition, apply at least 1 LID BMP to at least 10% of the site/lot area or 20% of the target impervious surface (whichever is less). ↳ 3,120 sf

   Select which LID BMP option is proposed for this project (listed in order of preference):

   ☐ Full Infiltration (Section 5.4)

   ☐ Limited Infiltration (Appendix C, section C.2.3)

   ☐ Basic Dispersion (Appendix C, section C.2.4)

   ☐ Rain Garden (Appendix C, section C.2.5)

   ☐ Permeable Pavement (Appendix C, section C.2.6)

   ☐ Rainwater Harvesting (Appendix C, section C.2.7)

   ☐ Vegetated Roof (Appendix C, section C.2.8)

   ☐ Reduced Impervious Surface Credit (Appendix C, section C.2.9)
   The reduction in impervious surface area below maximum lot coverage must be assured through covenant and/or alternative design of impervious surface area. Reduction techniques include: restricted footprint, wheel strip driveways, minimum disturbance foundation, and open grid decking over pervious surface. See specific criteria in section C.2.9.

   ☐ Native Growth Retention Credit (Appendix C, section C.2.10)
   Credit for preserving native growth at the rate of 1 sq ft impervious requires 3.5 sq ft of native vegetated surface – in other words, for every 3.5 sq ft of native vegetation area preserved, 1 sq ft of target impervious surface may be credited as mitigated.

   None are feasible for this project.

CITY OF KIRKLAND
123 FIFTH AVENUE ● KIRKLAND, WASHINGTON 98033-6189 ● (425) 587-3800

DEPARTMENT OF PUBLIC WORKS
PRE-APPROVED PLANS POLICY

Policy D-11: SURFACE WATER ADJUSTMENT PROCESS

This process is provided for the occasions when site conditions dictate or a project applicant requests modifications to one of the surface water core or special requirements, or any other specific requirement or standard contained in the King County Surface Water Design Manual or the City of Kirkland Public Works Pre-Approved Plans. A fee will be required for review of an adjustment request. For projects with complex drainage issues (such as extensive modeling or review of modeling results), review by a third party may be required at the applicant's expense. Proposed adjustments should be approved prior to final permit approval.

Adjustment Process

1. Complete a Surface Water Standards Adjustment Request form (see page 2 of this policy).
2. Submit the request form and additional materials to the Public Works Department. Include all materials that may assist in a complete review and consideration of the request. Failure to provide all pertinent information may result in delayed processing or denial of request.
3. The request will be reviewed, and the applicant will be notified of approval/denial.

Adjustment Criteria

Adjustments to the surface water design requirements may be granted provided that granting the adjustment will achieve ALL of the following:

1. The adjustment will produce a compensating or comparable result that is in the public interest, AND
2. The adjustment meets the objectives of safety, function, appearance, environmental protection, and maintainability based on sound engineering judgment, AND
3. Granting the adjustment for the individual property in question will not create a significant adverse impact to public health, welfare, water quality, and properties downstream or nearby, AND
4. The adjustment requires the best practicable alternative for achieving the spirit and intent of the requirements in question, AND,
5. The granting of any adjustment that would be in conflict with the requirements of any other department will require review with that department.

The City of Kirkland recognizes there are special circumstances or conditions affecting property such that strict application of the criteria for producing a compensating or comparable result would deprive the applicant of all reasonable use of the parcel of land in question. In these cases Public Works staff will work with the applicant, and every effort will be made to find creative ways to meet the intent of the requirement and to achieve a mutually satisfactory result.

Adjustment Reconsideration Process

The applicant may request reconsideration of the denial or conditions of approval of an adjustment request by submitting a formal letter to the Public Works Director within 15 working days of the decision. This letter must include justification for reconsideration of the decision, along with a copy of the adjustment request. The director shall respond to the applicant in writing within 15 working days. The director's decision on the reconsideration request shall be final. A per-hour review fee will be charged to the applicant for review of a reconsideration request.

Exceptions/Variances

For applicants requesting a formal exception/variance from the minimum requirements, see the City of Kirkland Western Washington Phase II Municipal Stormwater Permit (Appendix I, Section 6).

SURFACE WATER DESIGN STANDARDS ADJUSTMENT REQUEST

Instructions to Applicant/Design Engineer:
Please complete this form and submit to the COK Public Works Department. Include all materials that may assist in a complete review and consideration of the adjustment request. Failure to provide all pertinent information may result in delayed processing or denial of request.

COK Permit Number:		**Request date:**
Project Name:		
Project Address:		
Applicant Name:	Design Engineer Name and Firm:	
Applicant Phone:	Design Engineer Phone:	
Applicant Signature:	Design Engineer Signature:	

Description of Adjustment Request:

Justification for Adjustment Request:

Applicable KC Surface Water Design Manual: ☐ **1998** **or** ☐ **2009**

Applicable Section(s) of Standards:

COK Determination: ☐ **Approved** ☐ **Denied**

Conditions (if applicable):

COK Staff Signature: _____ **Date:** _____

ENCLOSURE 4

Tab 5.0

5.0 CONVEYANCE SYSTEM ANALYSIS AND DESIGN

Stormwater runoff generated from the proposed parking lot development will be collected in a series of catch basins and pipes that will connect to the proposed onsite stormwater detention and water quality treatment system. The conveyance system analysis and design was performed using the rational method. The calculations are included in this section.

Each catch basin has a separate contributory area that is shown on the following conveyance map.

As shown in the following rational method calculations, the Qd/Qf for all pipes during the 100-year event does not exceed a value of 1.0, meaning that no pipes will experience surcharge conditions. Because of this, a backwater analysis has not been included.

BARGHAUSEN CONSULTING ENGINEERS - PIPE FLOW CALCULATOR
using the Rational Method & Manning Formula
KING COUNTY DESIGN FOR **25** YEAR STORM

JOB NAME: Guynup Parcel
JOB#: 6222
REVISED: 3/16/2012

NOTE: ENTER DEFAULTS AND STORM DATA BEFORE BEGINNING				
DEFAULTS	C=	0.9	n=	0.012
	d=	8	Tc=	6.3

A= Contributing Area (Ac)
C= Runoff Coefficient
Tc= Time of Concentration (min)
I= Intensity at Tc (in/hr)
d= Diameter of Pipe (in)
L= Length of Pipe (ft)
D= Water Depth at Qd (in)

Qd= Design Flow (cfs)
Qf= Full Capacity Flow (cfs)
Vd= Velocity at Design Flow (fps)
Vf= Velocity at Full Flow (fps)
s= Slope of pipe (%)
n= Manning Roughness Coefficient
Tt= Travel Time at Vd (min)

COEFFICIENTS FOR THE RATIONAL METHOD "Ir"-EQUATION

STORM	Ar	Br
2YR	1.58	0.58
10YR	2.44	0.64
25YR	2.66	0.65
50YR	2.75	0.65
100YR	2.61	0.63

PRECIP=	**3.25**
Ar=	**2.66**
Br=	**0.65**

FROM	TO	A	s	L	d	Tc	n	C	SUM A	A*C	SUM A*C	I	Qd	Qf	**Qd/Qf**	D/d	D	Vf	Vd	Tt
CB 1	CB 2	0.06	0.50	40	8	6.3	0.012	0.9	0.06	0.05	0.05	2.61	0.14	0.93	**0.153**	0.262	2.10	2.65	1.91	0.35
CB 2	CB 3	0.22	0.50	79	8	6.6	0.012	0.9	0.28	0.20	0.25	2.52	0.64	0.93	**0.687**	0.608	4.86	2.65	2.85	0.46
CB 4	CB 3	0.07	0.50	78	8	6.3	0.012	0.9	0.07	0.06	0.06	2.61	0.16	0.93	**0.178**	0.282	2.26	2.65	2.00	0.65
CB 3	Vault	0.15	0.20	31	12	6.3	0.012	0.9	0.5	0.14	0.45	2.61	1.18	1.73	**0.682**	0.604	7.25	2.20	2.36	0.22
Vault	SF#1	0.50	0.20	5	12	6.3	0.012	0.9	0.5	0.45	0.45	2.61	1.18	1.73	**0.682**	0.604	7.25	2.20	2.36	0.04
SF#1	SF#2	0.00	0.20	5	12	6.3	0.012	0.9	0.5	0.00	0.45	2.60	1.17	1.73	**0.679**	0.603	7.23	2.20	2.36	0.04
SF#2	Ex. CB	0.00	0.20	65	12	6.4	0.012	0.9	0.5	0.00	0.45	2.59	1.17	1.73	**0.677**	0.601	7.21	2.20	2.35	0.46

BARGHAUSEN CONSULTING ENGINEERS - PIPE FLOW CALCULATOR
using the Rational Method & Manning Formula
KING COUNTY DESIGN FOR **100** YEAR STORM

JOB NAME: Guynup
JOB#: 6222
REVISED: 3/16/2012

NOTE: ENTER DEFAULTS AND STORM DATA BEFORE BEGINNING				
DEFAULTS	C=	0.9	n=	0.012
	d=	8	Tc=	6.3

A= Contributing Area (Ac)
C= Runoff Coefficient
Tc= Time of Concentration (min)
I= Intensity at Tc (in/hr)
d= Diameter of Pipe (in)
L= Length of Pipe (ft)
D= Water Depth at Qd (in)

Qd= Design Flow (cfs)
Qf= Full Capacity Flow (cfs)
Vd= Velocity at Design Flow (fps)
Vf= Velocity at Full Flow (fps)
s= Slope of pipe (%)
n= Manning Roughness Coefficient
Tt= Travel Time at Vd (min)

COEFFICIENTS FOR THE RATIONAL METHOD "Ir"-EQUATION

STORM	Ar	Br
2YR	1.58	0.58
10YR	2.44	0.64
25YR	2.66	0.65
50YR	2.75	0.65
100YR	2.61	0.63

PRECIP=	**3.65**
Ar=	**2.61**
Br=	**0.63**

FROM	TO	A	s	L	d	Tc	n	C	SUM A	A*C	SUM A*C	I	Qd	Qf	**Qd/Qf**	D/d	D	Vf	Vd	Tt
CB 1	CB 2	0.06	0.50	40	8	6.3	0.012	0.9	0.06	0.05	0.05	2.99	0.16	0.93	**0.174**	0.279	2.24	2.65	1.99	0.34
CB 2	CB 3	0.22	0.50	79	8	6.6	0.012	0.9	0.28	0.20	0.25	2.89	0.73	0.93	**0.788**	0.668	5.35	2.65	2.94	0.45
CB 4	CB 3	0.07	0.50	78	8	6.3	0.012	0.9	0.07	0.06	0.06	2.99	0.19	0.93	**0.203**	0.303	2.42	2.65	2.07	0.63
CB 3	Vault	0.15	0.20	31	12	6.3	0.012	0.9	0.5	0.14	0.45	2.99	1.34	1.73	**0.779**	0.663	7.95	2.20	2.43	0.21
Vault	SF#1	0.50	0.20	5	12	6.3	0.012	0.9	0.5	0.45	0.45	2.99	1.34	1.73	**0.779**	0.663	7.95	2.20	2.43	0.03
SF#1	SF#2	0.00	0.20	5	12	6.3	0.012	0.9	0.5	0.00	0.45	2.98	1.34	1.73	**0.777**	0.661	7.93	2.20	2.43	0.03
SF#2	Ex. CB	0.00	0.20	65	12	6.4	0.012	0.9	0.5	0.00	0.45	2.97	1.34	1.73	**0.774**	0.659	7.91	2.20	2.43	0.45

ENCLOSURE 4

CONVEYANCE BASIN TABLE				
BASIN AREA	AREA(AC.)	RECEIVING CB	Q100(CFS)	Q25(CFS)
CB1	0.06	CB2	0.16	0.14
CB2	0.22	CB3	0.73	0.64
CB3	0.15	VAULT	1.34	1.18
CB4	0.07	CB3	0.19	0.16

0 15 30 60

SCALE: 1"=30'

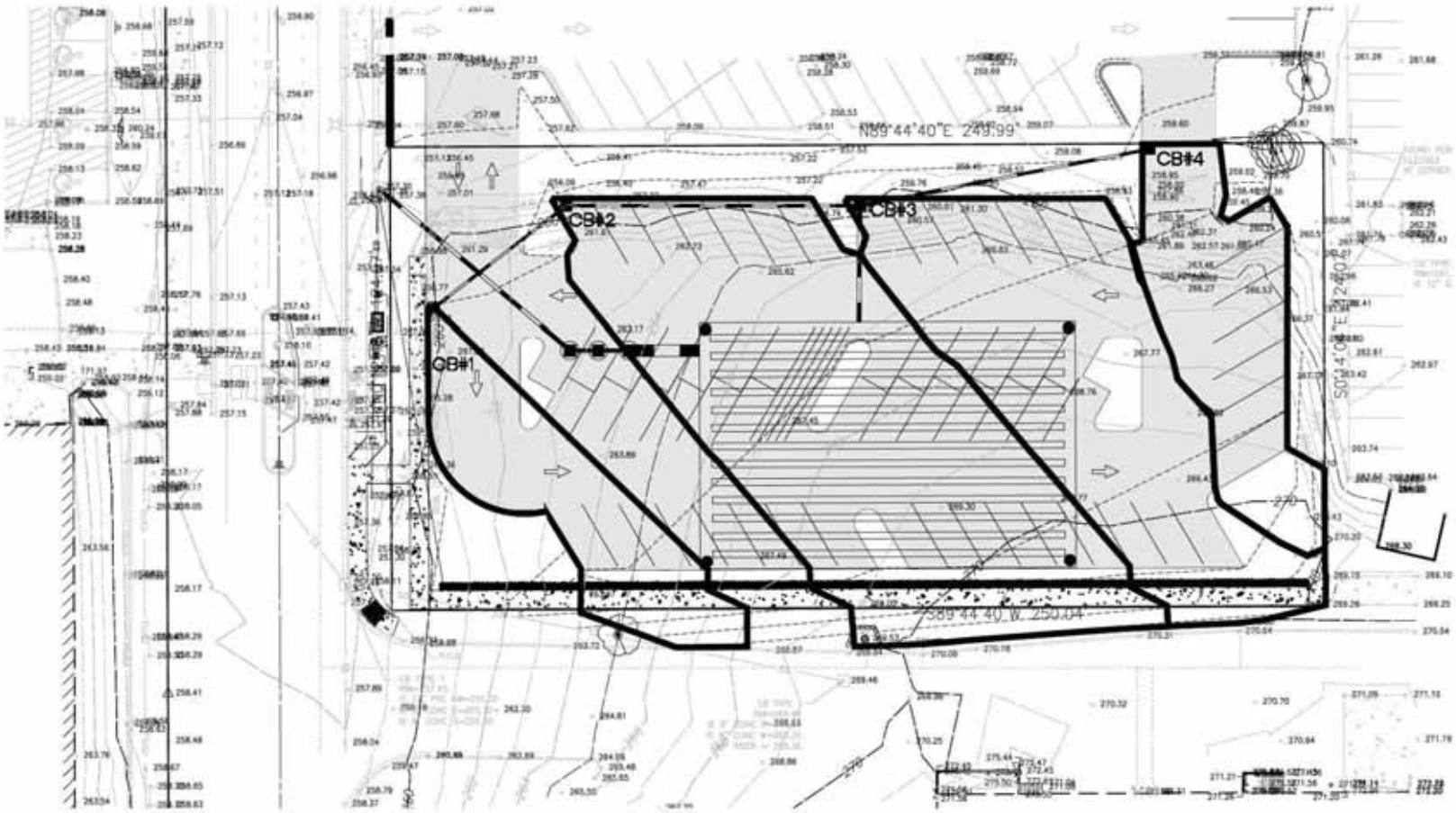

No.	Date	By	Chk.	Appr.	Revision

Title: CONVEYANCE MAP GUYNUP PARCEL

For: COSTCO WHOLESALE CORP. 999 LAKE DRIVE

Scale: Horizontal 1"=30' Vertical NA

Designed — Drawn — Checked — Approved — Date —

BARGHAUSEN CONSULTING ENGINEERS, INC.
18215 72ND AVENUE SOUTH
KENT, WA 98032
(425)251-6222
(425)251-8782 FAX
CIVIL ENGINEERING, LAND PLANNING, SURVEYING, ENVIRONMENTAL SERVICES

Job Number 6222

Sheet 1 of 1